Dist	COUNTY	ROUTE	POST MILES TOTAL PROJECT	SHEET No.	TOTAL SHEETS

REGISTERED CIVIL ENGINEER X DATE

PLANS APPROVAL DATE

REGISTERED PROFESSIONAL ENGINEER X No. X Exp. X CIVIL STATE OF CALIFORNIA

THE STATE OF CALIFORNIA OR ITS OFFICERS OR AGENTS SHALL NOT BE RESPONSIBLE FOR THE ACCURACY OR COMPLETENESS OF SCANNED COPIES OF THIS PLAN SHEET.

THE REGISTERED CIVIL ENGINEER FOR THE PROJECT IS RESPONSIBLE FOR THE SELECTION AND PROPER APPLICATION OF THE COMPONENT DESIGN AND ANY MODIFICATIONS SHOWN.

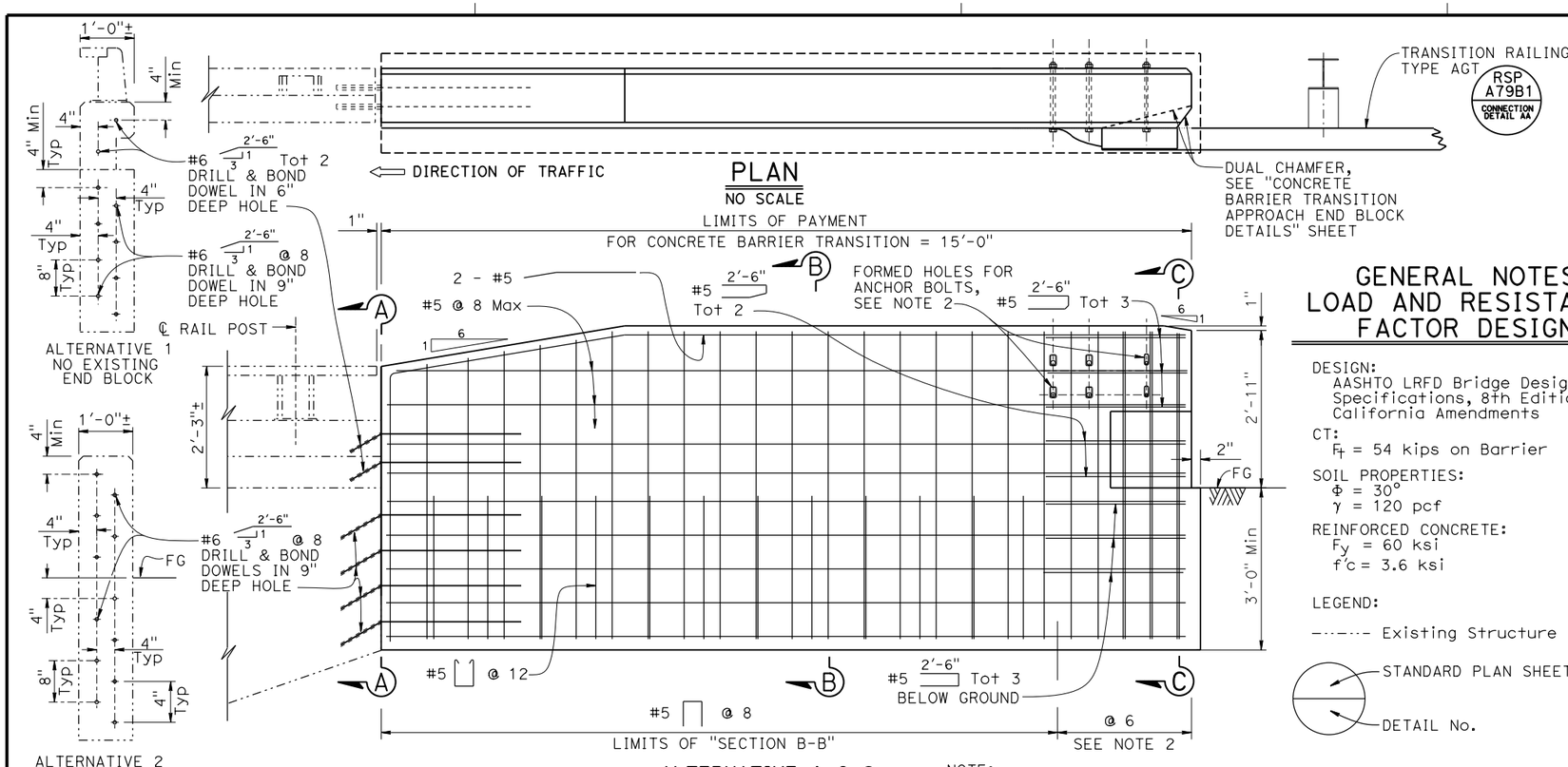

PLAN
NO SCALE

ALTERNATIVE 1 & 2

SECTION A-A
NO SCALE

GENERAL NOTES
LOAD AND RESISTANCE FACTOR DESIGN

DESIGN:
AASHTO LRFD Bridge Design Specifications, 8th Edition with California Amendments

CT:
F_t = 54 kips on Barrier

SOIL PROPERTIES:
$\Phi = 30°$
γ = 120 pcf

REINFORCED CONCRETE:
F_y = 60 ksi
$f'c$ = 3.6 ksi

LEGEND:

-·-·-·- Existing Structure

STANDARD PLAN SHEET No.

DETAIL No.

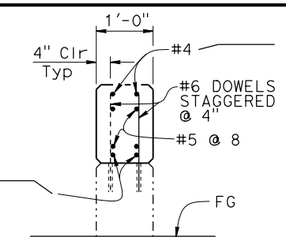

SECTION D-D
NO SCALE

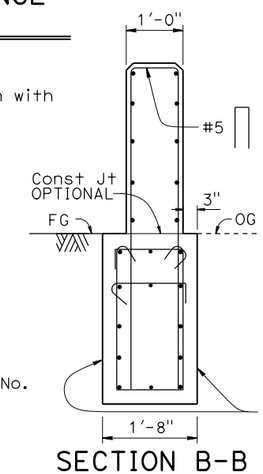

SECTION B-B
NO SCALE

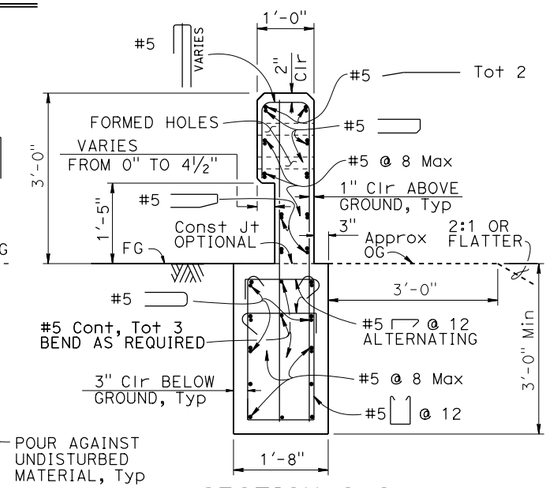

SECTION C-C
NO SCALE

For details not shown, see "SECTION C-C"

NOTE:
Alternative 1 shown (without Existing End Block), Alternative 2 similar (with Existing End Block).

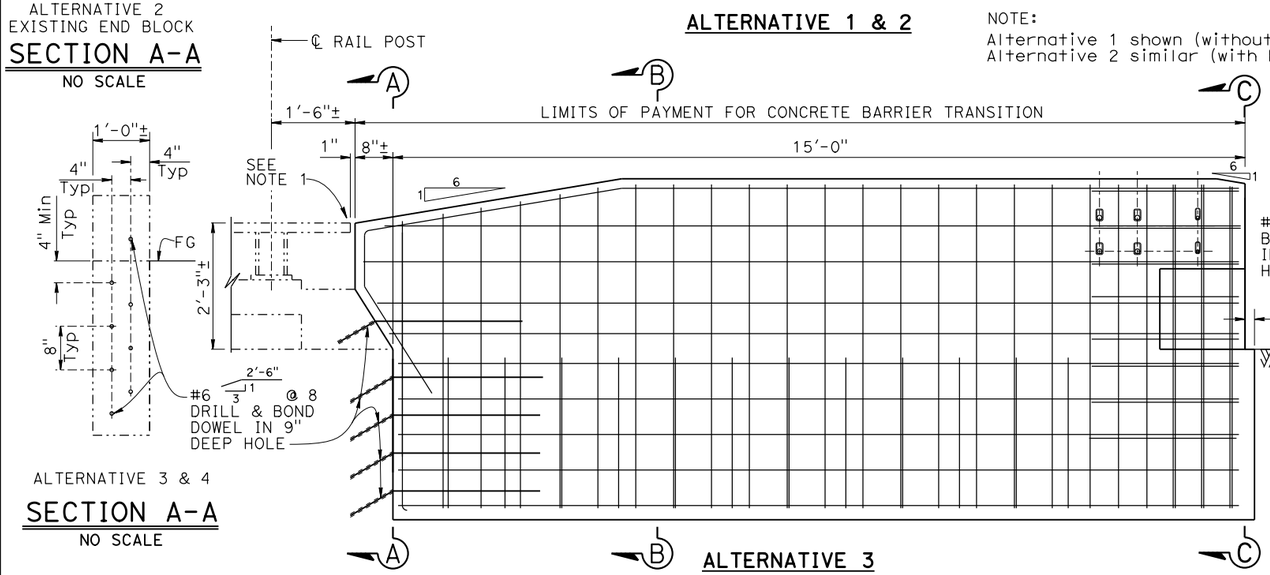

ALTERNATIVE 3 & 4

SECTION A-A
NO SCALE

ALTERNATIVE 3

NOTE: For details not shown, see "ALTERNATIVE 1 & 2".

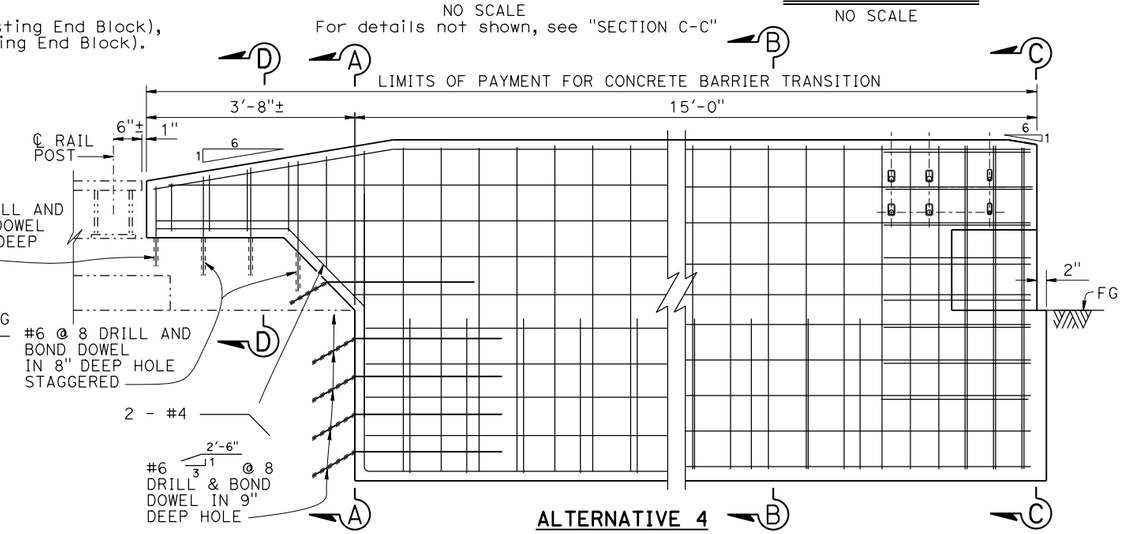

ALTERNATIVE 4

NOTE: For details not shown, see "ALTERNATIVE 1 & 2".

NOTES:
1. Cut and remove portion of existing steel rail of the Barrier (Type 9) as required and install end cap at cut end. For removal of existing guard rail, see ROADWAY PLANS.
2. For additional approach end block details, see "CONCRETE BARRIER TRANSITION APPROACH END BLOCK DETAILS" sheet.

ELEVATION
NO SCALE

NOTE:
THE CONTRACTOR SHALL VERIFY ALL CONTROLLING FIELD DIMENSIONS BEFORE ORDERING OR FABRICATING ANY MATERIAL.

BRIDGE STANDARD DETAILS

xs16-030	January 2024	*The components of the Bridge Standard Details have been prepared under the responsible charge of the Technical Owner, a registered civil engineer in the State of California*
FILE NO.	APPROVAL DATE	

STATE OF CALIFORNIA
DEPARTMENT OF TRANSPORTATION

DIVISION OF ENGINEERING SERVICES

BRIDGE No. XX-XXXX
POST MILE X.X

X

CONCRETE BARRIER TRANSITION
AGT CONNECTION TO TYPE 9

Refer to: http://www.dot.ca.gov/hq/esc/techpubs/manual/bridgemanuals/bridge-standard-detail-sheets/index.html

DATE PLOTTED => 11-JAN-2024
FILE => 202401_xs16-030.dgn
TIME PLOTTED => 22:51
USERNAME => s120745
ORIGINAL SCALE IN INCHES FOR REDUCED PLANS 0 1 2 3

UNIT: XXXX
PROJECT NUMBER & PHASE: XXXXXXXXXX1
COUNTY/ROUTE: XXX/XXX
CONTRACT No.: XX-XXXXX4

DISREGARD PRINTS BEARING EARLIER REVISION DATES

REVISION DATES | SHEET X | OF X