Dist	COUNTY	ROUTE	POST MILES TOTAL PROJECT	SHEET No.	TOTAL SHEETS

REGISTERED CIVIL ENGINEER X DATE

PLANS APPROVAL DATE

REGISTERED PROFESSIONAL ENGINEER X No. X Exp. X CIVIL STATE OF CALIFORNIA

THE STATE OF CALIFORNIA OR ITS OFFICERS OR AGENTS SHALL NOT BE RESPONSIBLE FOR THE ACCURACY OR COMPLETENESS OF SCANNED COPIES OF THIS PLAN SHEET.

THE REGISTERED CIVIL ENGINEER FOR THE PROJECT IS RESPONSIBLE FOR THE SELECTION AND PROPER APPLICATION OF THE COMPONENT DESIGN AND ANY MODIFICATIONS SHOWN.

NOTES:

1. Not all post reinforcement is shown, see "CONCRETE BARRIER TYPE 85SW DETAILS No. 1" sheet.
2. For "SECTION A-A" and "SECTION B-B", see "CONCRETE BARRIER TYPE 85SW DETAILS No. 2" sheet.
3. SECTION C-C is 1'-9" long as shown, only reinforcement for post transition shown. See "CONCRETE BARRIER TYPE 85SW DETAILS No. 2" sheet.

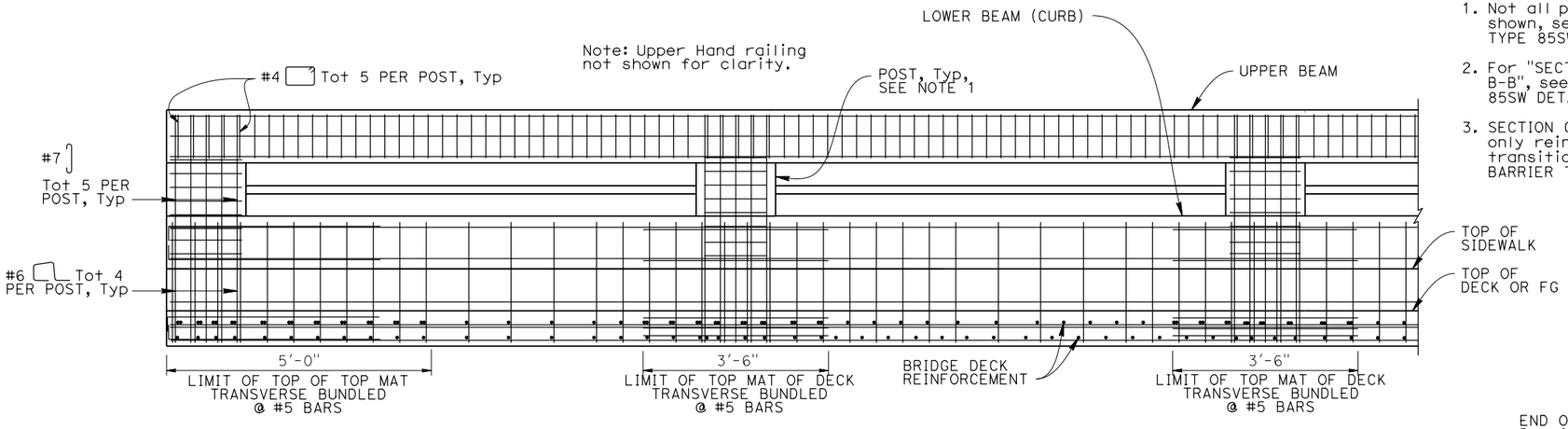

ELEVATION

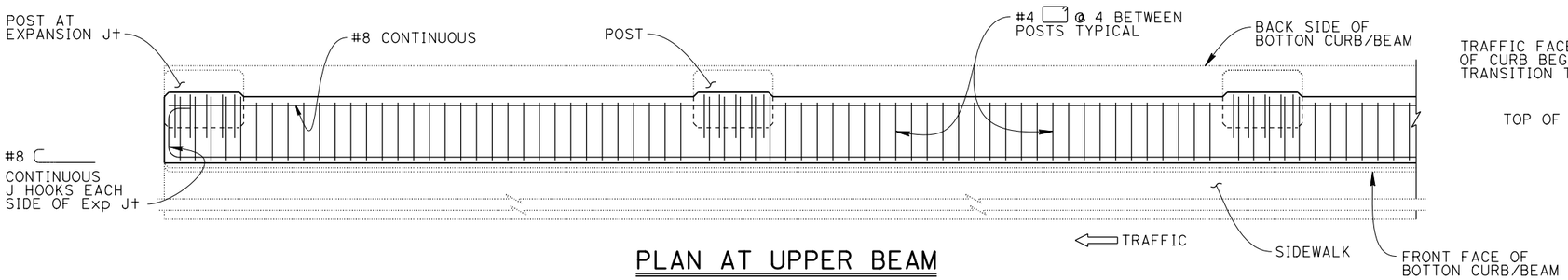

PLAN AT UPPER BEAM

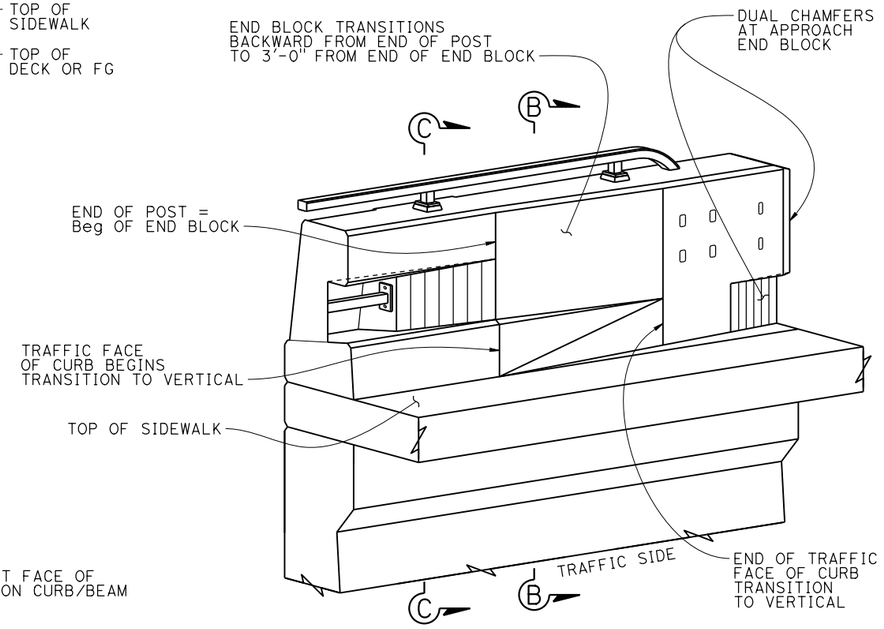

ISOMETRIC VIEW OF POST FACE TRANSITION TO END BLOCK AND DUAL END BLOCK CHAMFERS

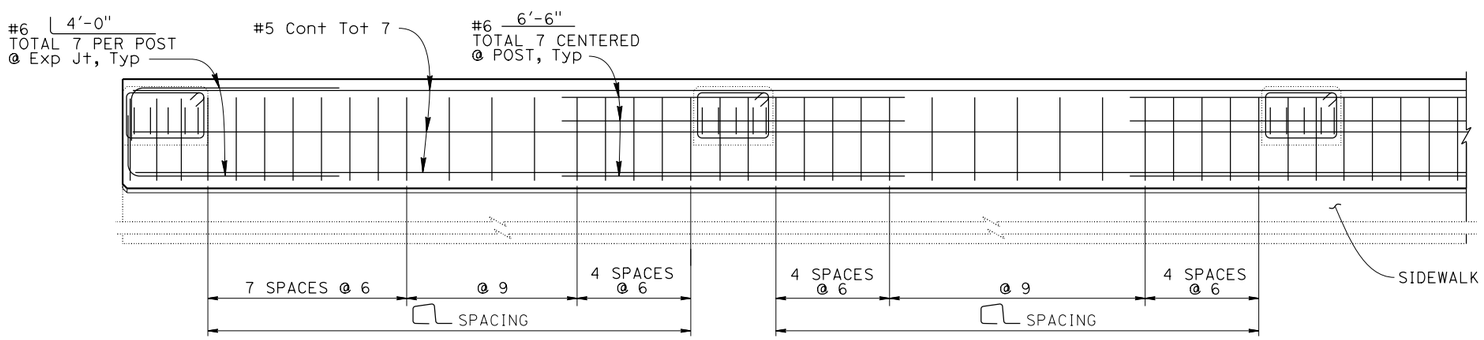

PLAN AT LOWER BEAM (CURB)

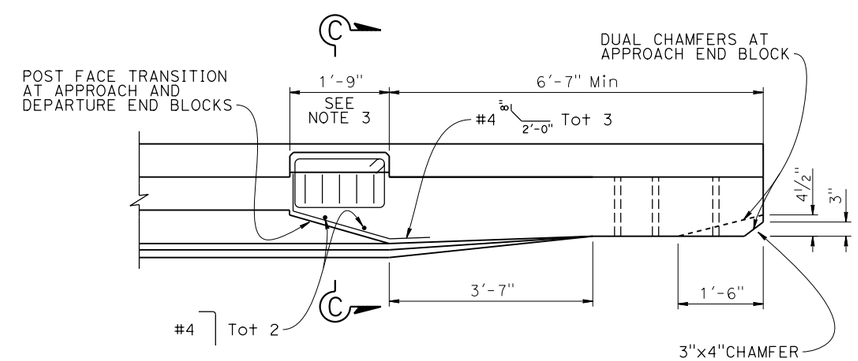

END BLOCK AND ADJACENT POST TRANSITION

NO SCALE

BRIDGE STANDARD DETAILS		
xs16-118-3	April 2024	*The components of the Bridge Standard Details have been prepared under the responsible charge of the Technical Owner, a registered civil engineer in the State of California*
FILE NO.	APPROVAL DATE	

STATE OF **CALIFORNIA** DEPARTMENT OF TRANSPORTATION

DIVISION OF ENGINEERING SERVICES

BRIDGE No. XX-XXXX

POST MILE X.X

X

CONCRETE BARRIER TYPE 85SW DETAILS No. 3

Refer to: http://www.dot.ca.gov/hq/esc/techpubs/manual/bridgemanuals/bridge-standard-detail-sheets/index.html

DATE PLOTTED => 22-APR-2024 TIME PLOTTED => 13:33
FILE => xs16-118-3.dgn USERNAME => s155182

ORIGINAL SCALE IN INCHES FOR REDUCED PLANS 0 1 2 3

UNIT: XXXX
PROJECT NUMBER & PHASE: XXXXXXXXXX1

COUNTY/ROUTE: XXX/XXX
CONTRACT No.: XX-XXXXX4

DISREGARD PRINTS BEARING EARLIER REVISION DATES

REVISION DATES

SHEET X OF X