Dist	COUNTY	ROUTE	POST MILES TOTAL PROJECT	SHEET No.	TOTAL SHEETS

REGISTERED CIVIL ENGINEER X DATE

PLANS APPROVAL DATE

REGISTERED PROFESSIONAL ENGINEER X No. X Exp. X CIVIL STATE OF CALIFORNIA

THE STATE OF CALIFORNIA OR ITS OFFICERS OR AGENTS SHALL NOT BE RESPONSIBLE FOR THE ACCURACY OR COMPLETENESS OF SCANNED COPIES OF THIS PLAN SHEET.

THE REGISTERED CIVIL ENGINEER FOR THE PROJECT IS RESPONSIBLE FOR THE SELECTION AND PROPER APPLICATION OF THE COMPONENT DESIGN AND ANY MODIFICATIONS SHOWN.

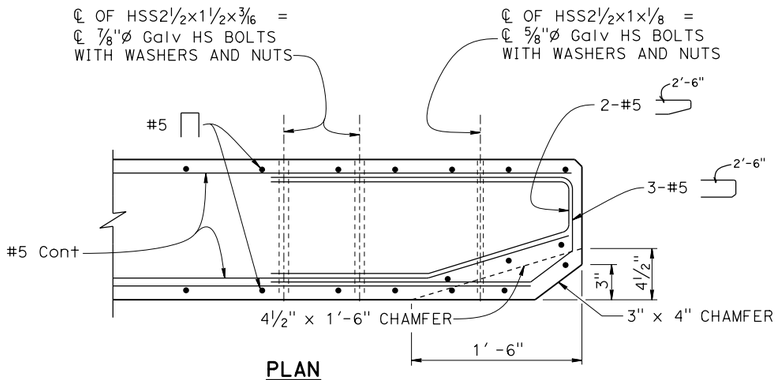

PLAN

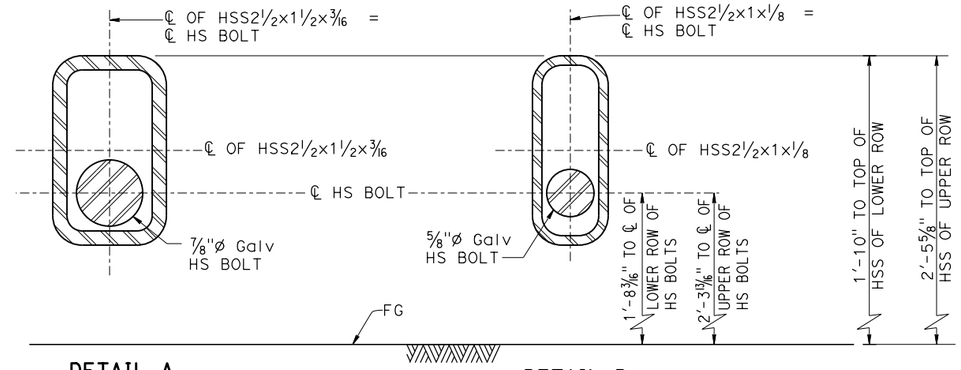

DETAIL A DETAIL B

APPROACH END BLOCK FORMED HOLES

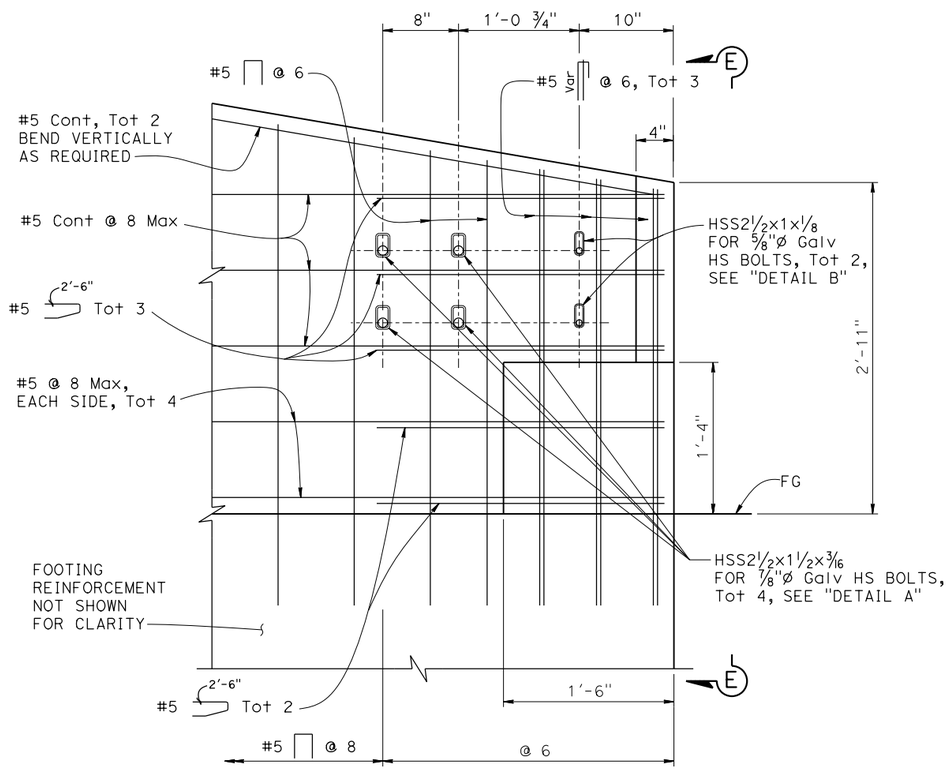

ELEVATION

APPROACH END BLOCK DETAILS

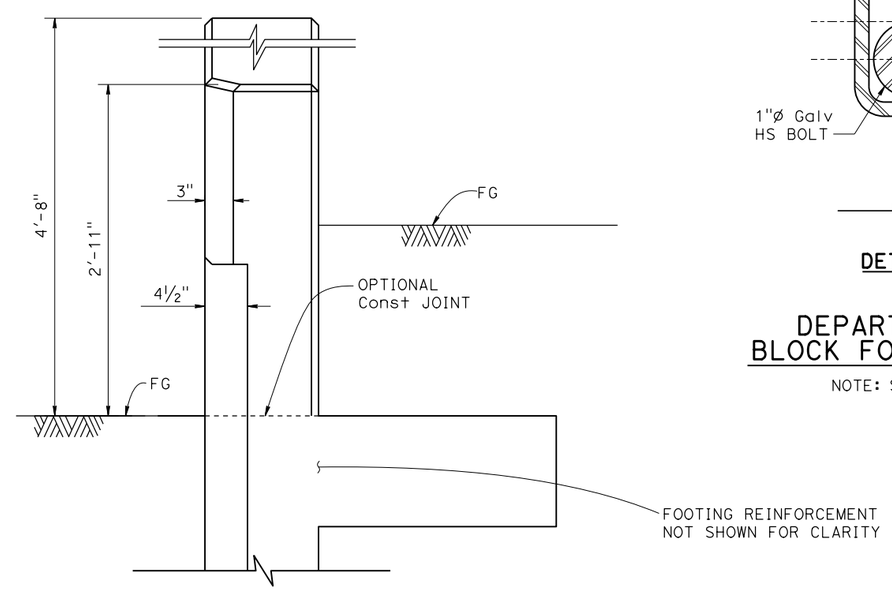

VIEW E-E

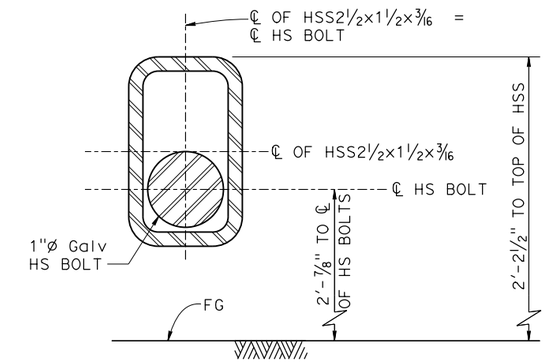

DETAIL C

DEPARTURE END BLOCK FORMED HOLES

NOTE: See Note 2

NOTES:

1. Adjust reinforcement to clear HSS by at least 1" min.
2. For typical connection for concrete barrier at departure end block to MGS details, see "MGS BRIDGE DEPARTURE CONNECTION DETAIL BB" on Revised Standard Plan RSP A79B1.

NO SCALE

BRIDGE STANDARD DETAILS		
xs16-092-3	JANUARY 2024	*The components of the Bridge Standard Details have been prepared under the responsible charge of the Technical Owner, a registered civil engineer in the State of California*
FILE NO.	APPROVAL DATE	

STATE OF CALIFORNIA DEPARTMENT OF TRANSPORTATION

DIVISION OF ENGINEERING SERVICES

BRIDGE No. XX-XXXX

POST MILE X.X

X

CONCRETE BARRIER TYPE 60SD TRANSITION AT BRIDGE COLUMN-DETAILS No.3

Refer to: http://www.dot.ca.gov/hq/esc/techpubs/manual/bridgemanuals/bridge-standard-detail-sheets/index.html

DATE PLOTTED => 14-DEC-2023 TIME PLOTTED => 13:35
FILE => 20231214_xs16-092-3.dgn USERNAME => s155182

ORIGINAL SCALE IN INCHES FOR REDUCED PLANS 0 1 2 3

UNIT: XXXX
PROJECT NUMBER & PHASE: XXXXXXXXXX1

COUNTY/ROUTE: XXX/XXX
CONTRACT No.: XX-XXXXX4

DISREGARD PRINTS BEARING EARLIER REVISION DATES

REVISION DATES

SHEET X OF X