Dist	COUNTY	ROUTE	POST MILES TOTAL PROJECT	SHEET No.	TOTAL SHEETS

REGISTERED CIVIL ENGINEER X DATE

PLANS APPROVAL DATE

REGISTERED PROFESSIONAL ENGINEER X No. X Exp. X CIVIL STATE OF CALIFORNIA

THE STATE OF CALIFORNIA OR ITS OFFICERS OR AGENTS SHALL NOT BE RESPONSIBLE FOR THE ACCURACY OR COMPLETENESS OF SCANNED COPIES OF THIS PLAN SHEET.

THE REGISTERED CIVIL ENGINEER FOR THE PROJECT IS RESPONSIBLE FOR THE SELECTION AND PROPER APPLICATION OF THE COMPONENT DESIGN AND ANY MODIFICATIONS SHOWN.

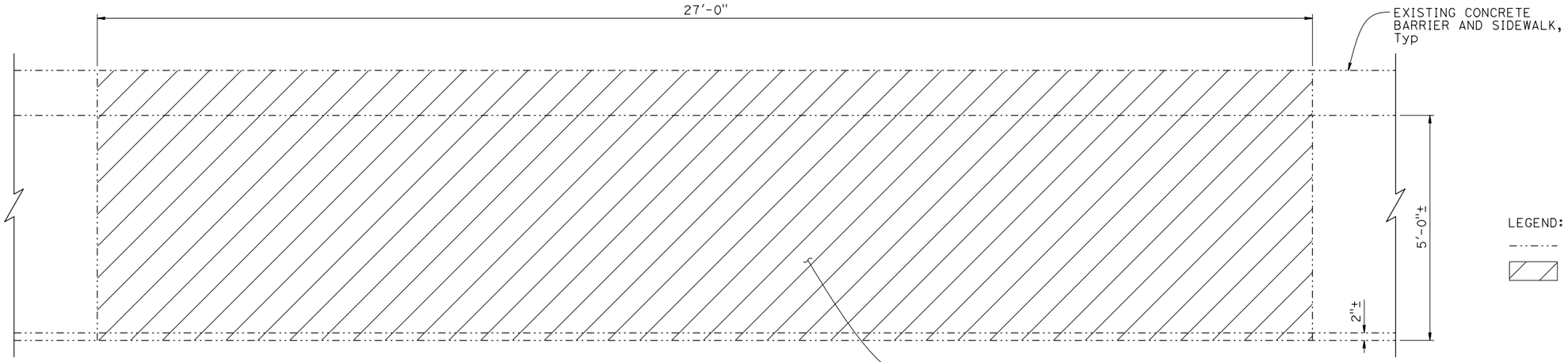

DEMOLITION PLAN
¾" = 1'-0"

LEGEND:

-·-·-·- Existing Structure

Concrete removal

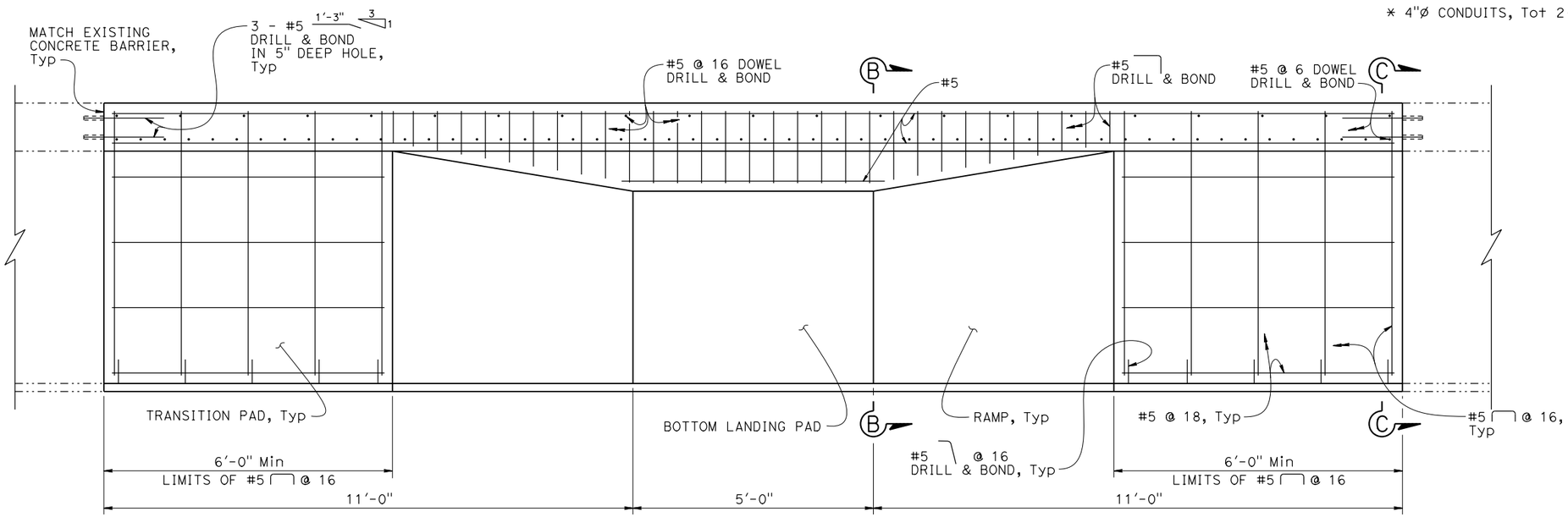

PLAN
¾" = 1'-0"

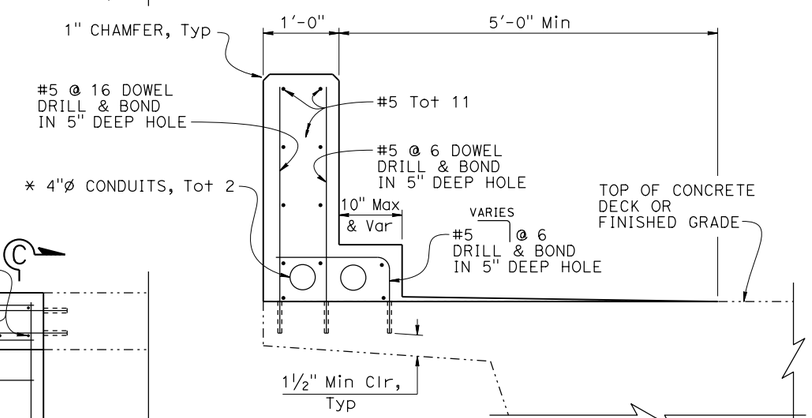

* Existing conduits (if any) to be re-connected to the proposed conduits.

SECTION B-B
1" = 1'-0"

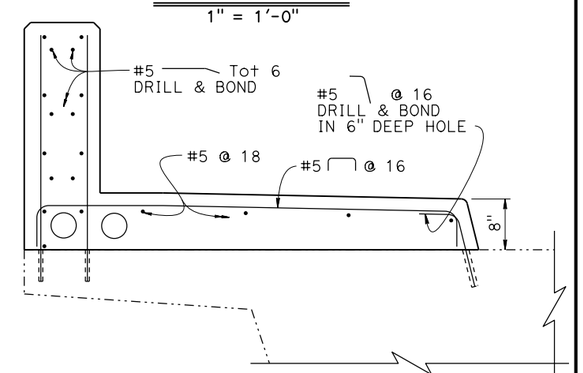

NOTE: For details not shown, see "SECTION B-B."

SECTION C-C
1" = 1'-0"

BRIDGE STANDARD DETAILS

xs19-020-2	September 2023	*The components of the Bridge Standard Details have been prepared under the responsible charge of the Technical Owner, a registered civil engineer in the State of California*
FILE NO.	APPROVAL DATE	

STATE OF CALIFORNIA DEPARTMENT OF TRANSPORTATION

DIVISION OF ENGINEERING SERVICES

BRIDGE No. XX-XXXX

POST MILE X.X

CURB RAMP CASE 2 DETAILS No. 2

Refer to: http://www.dot.ca.gov/hq/esc/techpubs/manual/bridgemanuals/bridge-standard-detail-sheets/index.html

DATE PLOTTED => 21-SEP-2023 TIME PLOTTED => 14:58
FILE => 201407-xs19-020-2.dgn USERNAME => s136247

ORIGINAL SCALE IN INCHES FOR REDUCED PLANS 0 1 2 3

UNIT: XXXX
PROJECT NUMBER & PHASE: XXXXXXXXXXX1
COUNTY/ROUTE/ZONE: XXX/XXX/X
CONTRACT No.: XX-XXXXX4

DISREGARD PRINTS BEARING EARLIER REVISION DATES

REVISION DATES

SHEET X OF X