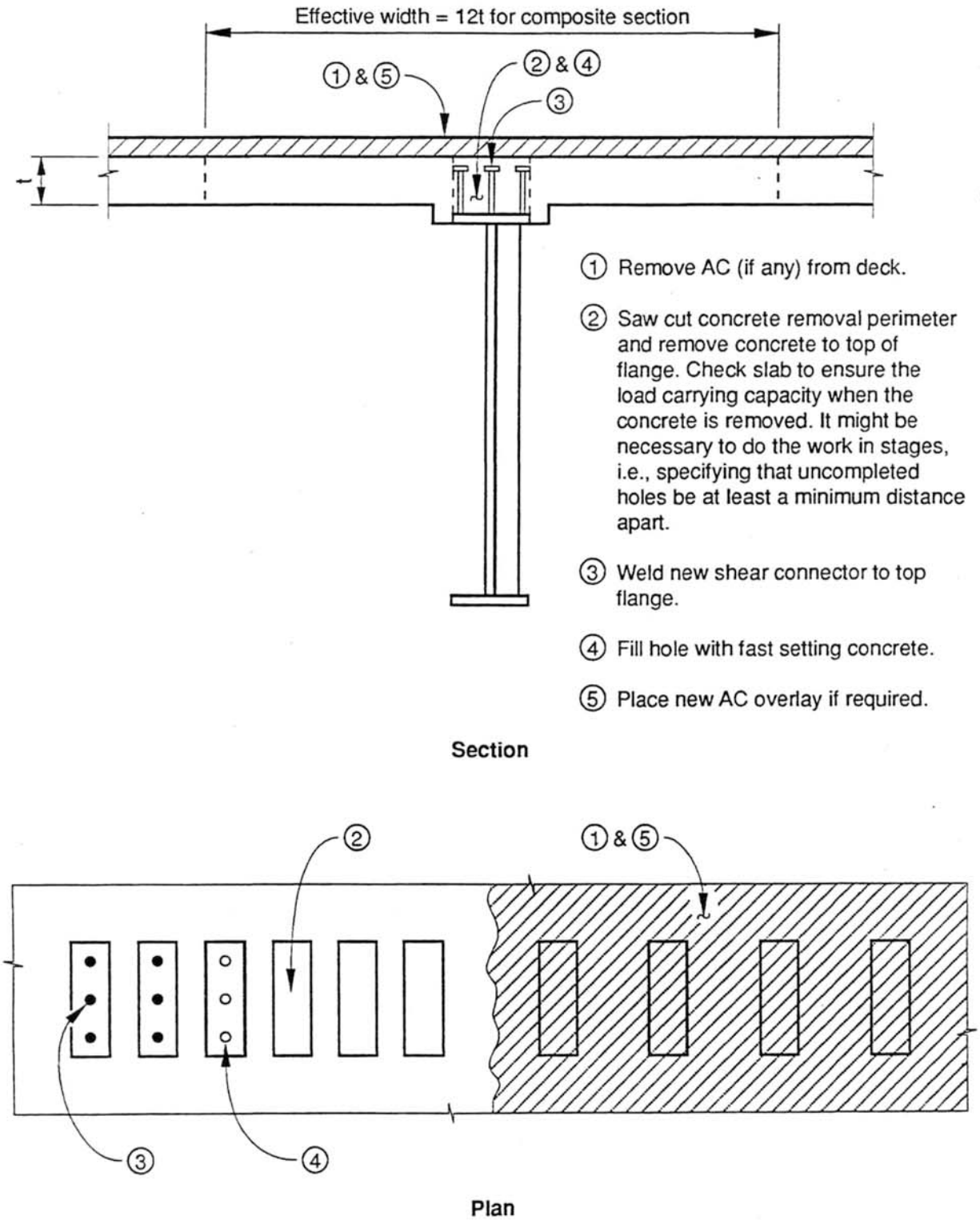

Figure 1. Strengthening by Adding Shear Connectors

Attachment A, Page 2 of 7

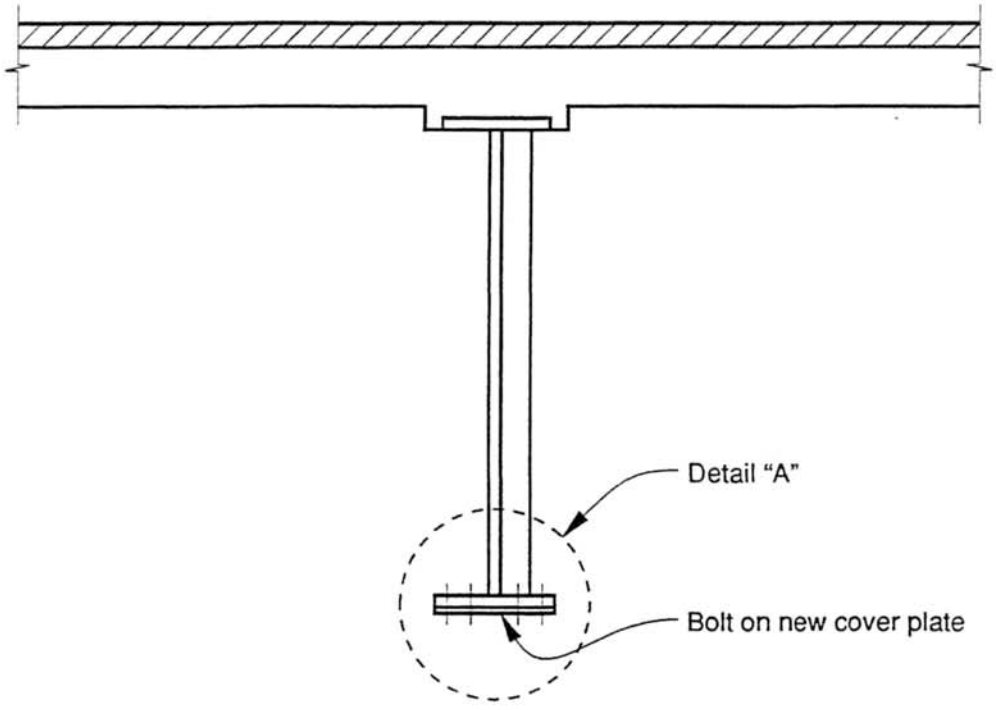

Section

Note: It may be advantageous, or necessary for design purposes, to shore the bridge during the cover plate installation. Shoring can reduce traffic deflections and or reduce dead load stresses and allow plates to be more effective.

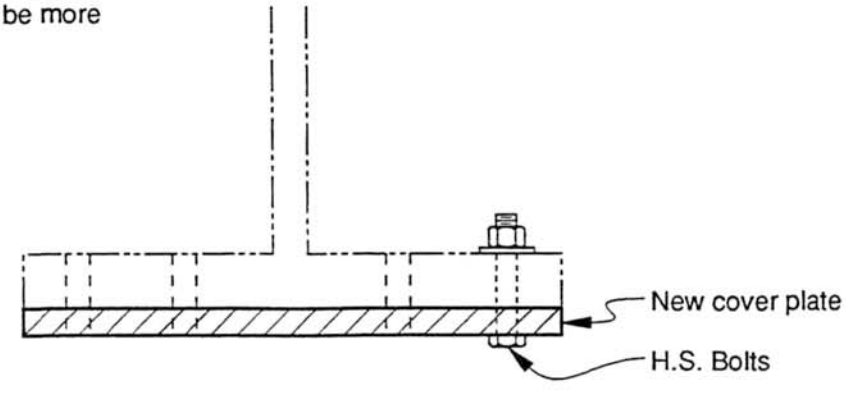

Detail "A"

Figure 2. Strengthening by Cover Plates

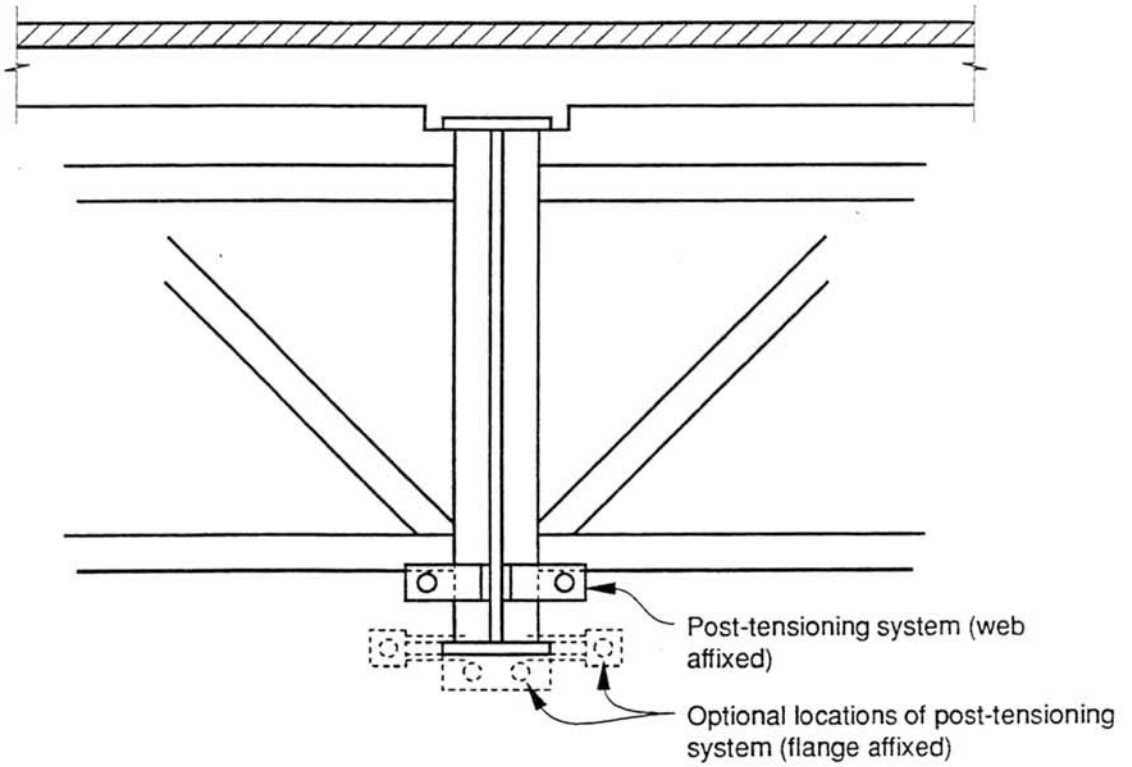

Section

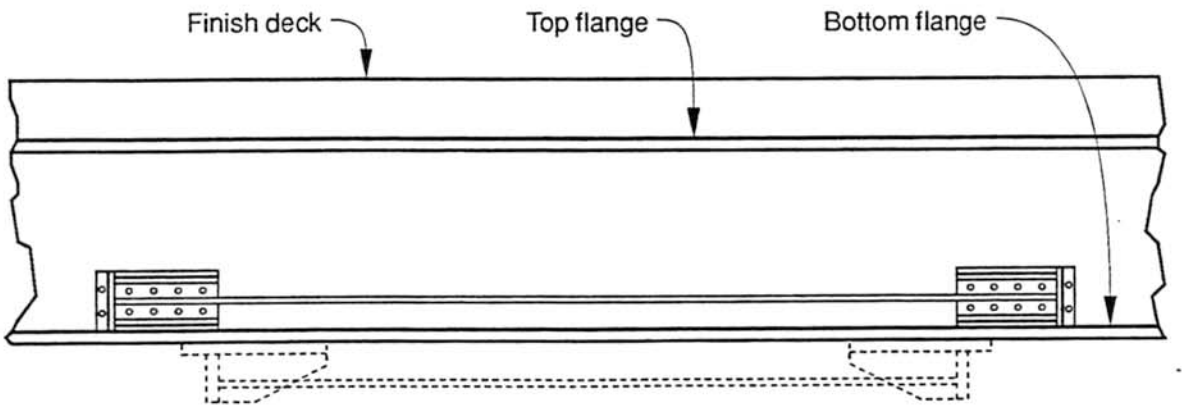

Girder Elevation

Figure 3. Strengthening by Post-Tensioning

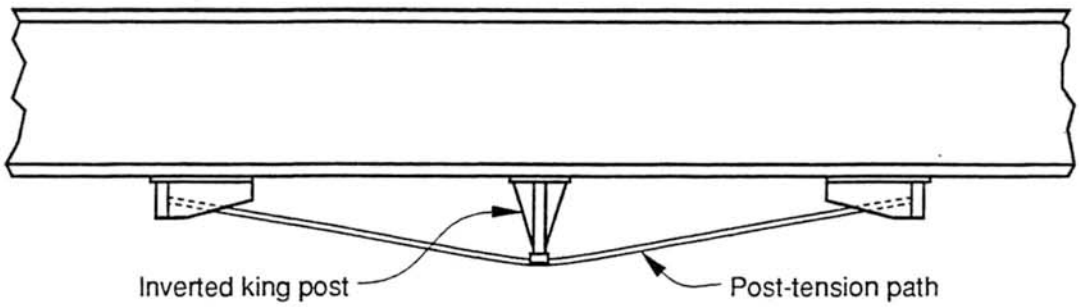

Girder Elevation

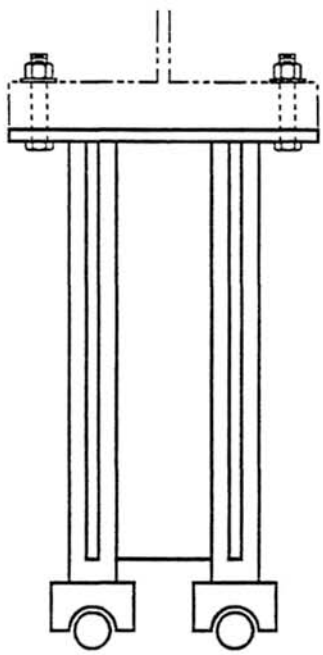

King Post Section

Figure 4. Strengthening by Post-Tensioning Using King Post

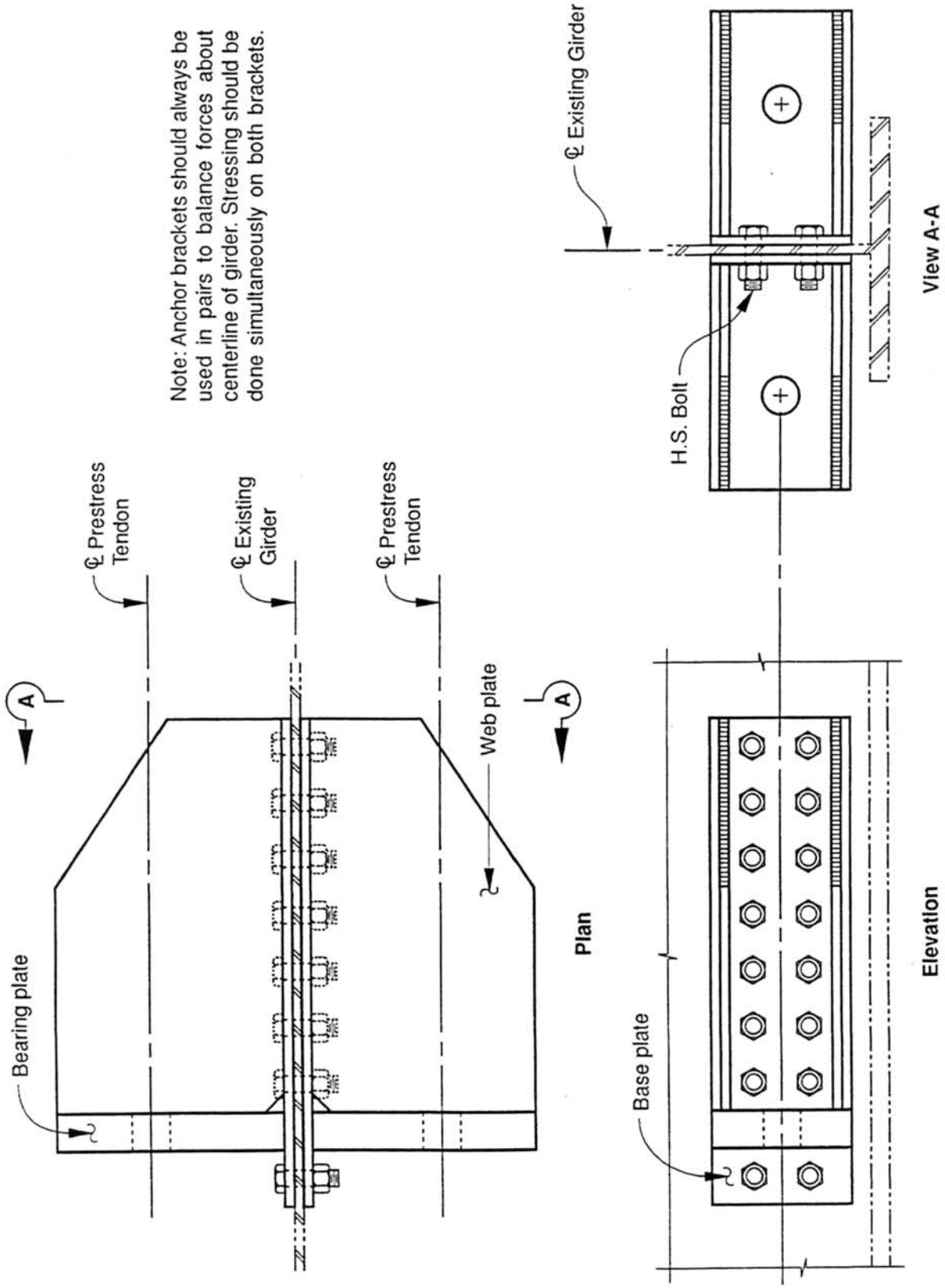

Figure 5. Girder Web Anchorage Bracket

Attachment A, Page 6 of 7

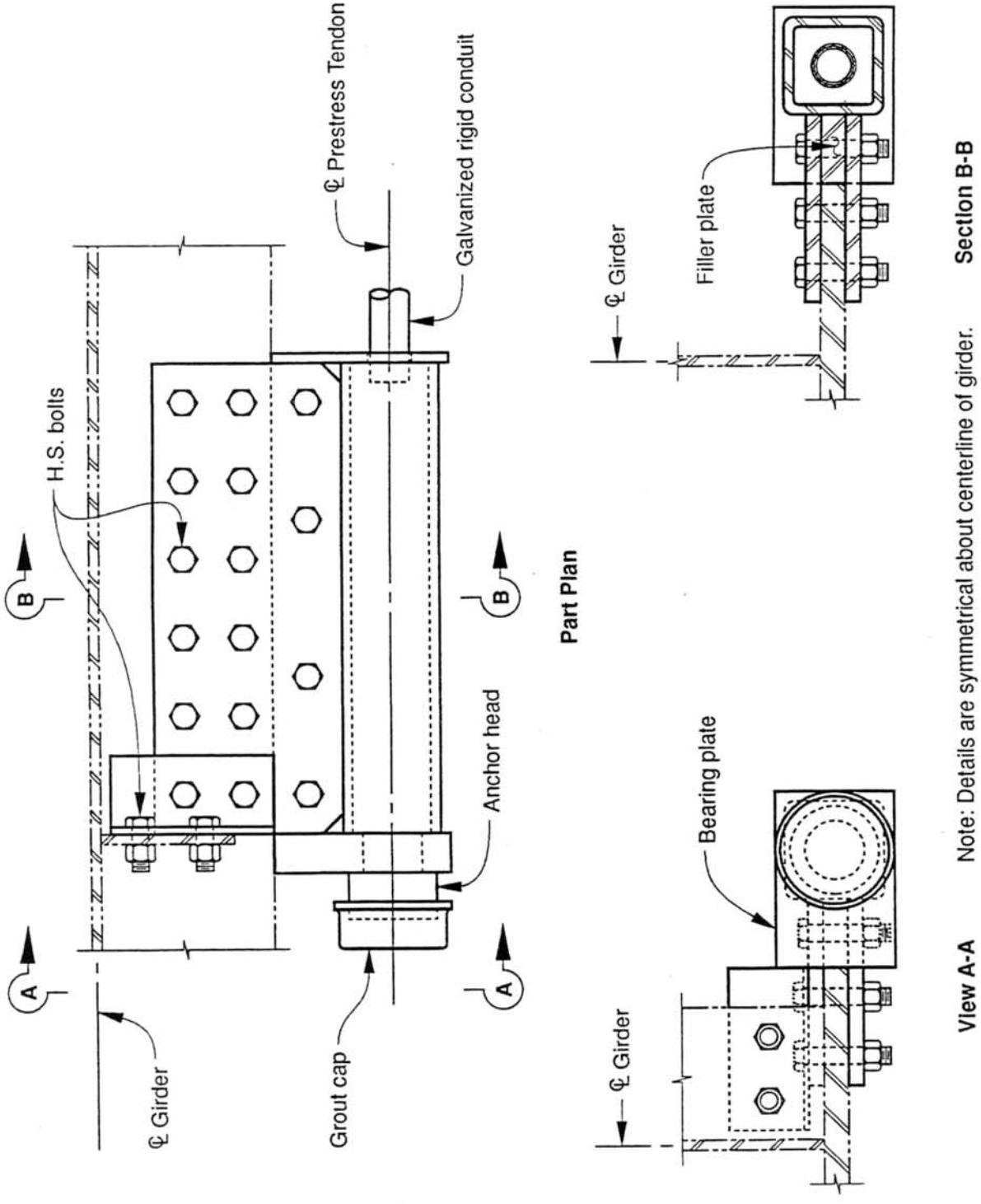

Note: Details are symmetrical about centerline of girder.

Figure 6. Girder Flange Anchorage Bracket (Side Flange Mount)

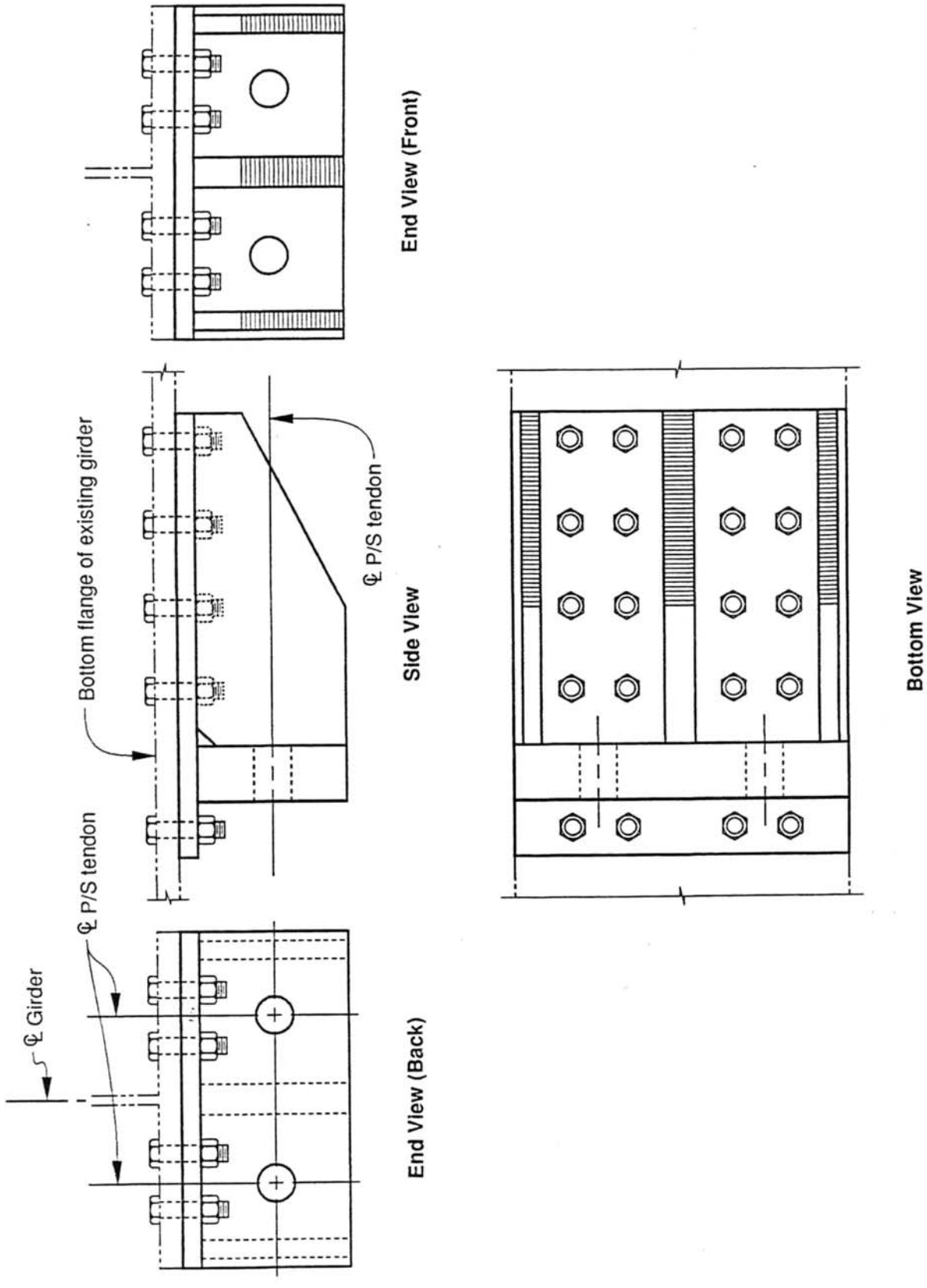

Figure 7. Girder Flange Anchorage Bracket (Bottom of Flange Mount)