DIST	COUNTY	ROUTE	POST MILES TOTAL PROJECT	SHEET No.	TOTAL SHEETS

REGISTERED CIVIL ENGINEER DATE

PLANS APPROVAL DATE

REGISTERED PROFESSIONAL ENGINEER No. Exp. CIVIL STATE OF CALIFORNIA

The State of California or its officers or agents shall not be responsible for the accuracy or completeness of scanned copies of this plan sheet.

The Registered Civil Engineer for the project is responsible for the selection and proper application of the component design and any modifications shown.

NOTES:

1. Low end of subgrade drain shown, at high end install cap at end of 3" slotted pipe. Subgrade drain located at end of Structure Approach slab, see "STRUCTURE PLANS"
2. Not all barrier reinforcement shown
3. For outlet details, see "STRUCTURE PLANS"
4. At acute corners of approach slab, bend reinforcement as required to clear expansion joint
5. Specific concrete barrier to be utilized as shown on "TYPICAL SECTION" elsewhere in "STRUCTURE PLANS". For barrier on slab without Soundwall see "CONCRETE BARRIER SLAB DETAILS" xs12-090

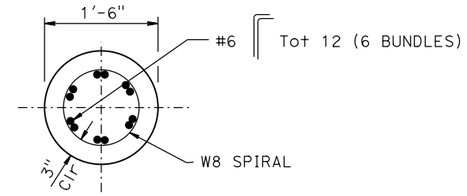

SECTION A-A

1" = 1'-0"

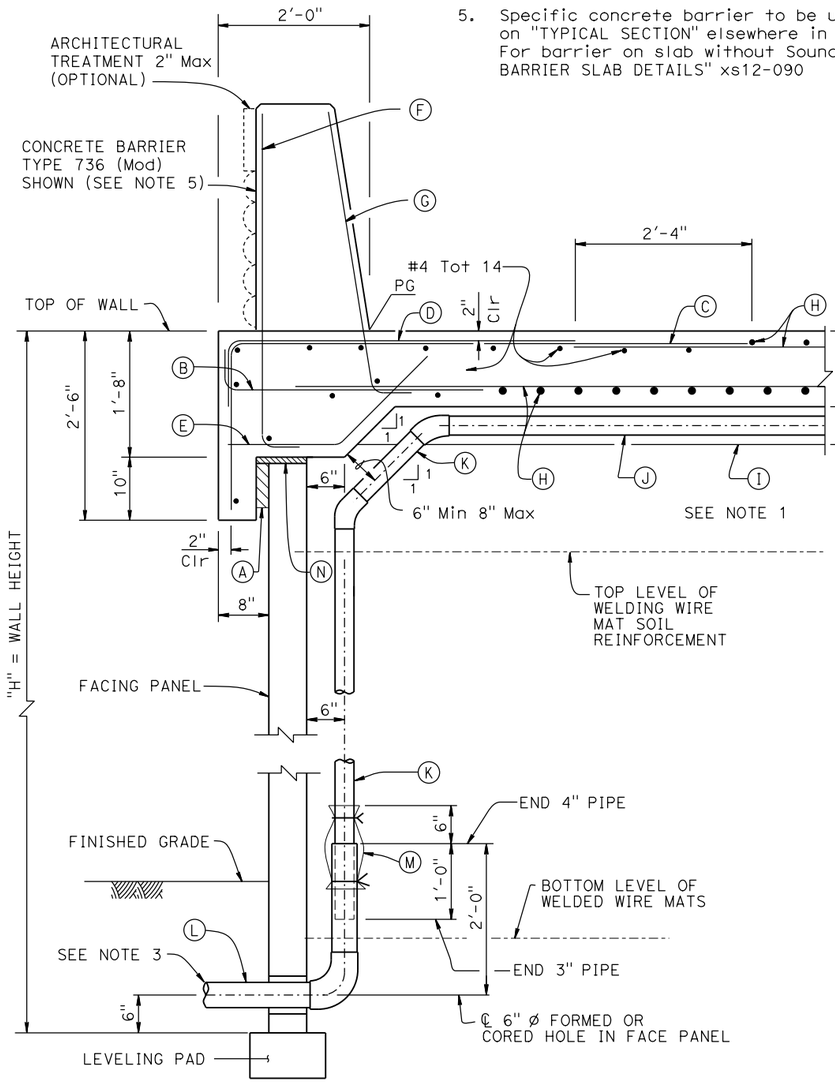

SECTION AT TOP OF MSE WITH STRUCTURE APPROACH SLAB AND CONCRETE BARRIER

1" = 1'-0"

NOTES:

(A) 2" Expanded Polystyrene recessed 2" into barrier slab at front of MSE facing panel

(B) #5 6¼" 3'-4" @ 12

(C) #5 6'-10⅝" @ 12

(D) #5 4'-7" @ 12 bundled with (C) bars

(E) #5 @ 12

(F) #5 6¼" @ 16 (To be in place prior to Approach Slab concrete)

(G) #5 6¼" @ 8 (To be in place prior to Approach Slab concrete)

(H) Approach Slab reinforcement

(I) Filter fabric

(J) 3" Plastic pipe (slotted)

(K) 3" Plastic pipe and fitting (unslotted)

(L) 4" Schedule 80 PVC outlet pipe and fittings (unslotted)

(M) 1'-0" wide x 2'-0" filter fabric wrapped around pipe and secured with nylon ties

(N) 1" Expanded Polystyrene

(O) Place elastomeric bearing pads ¾" x 4" x 6" every 1'-8" Min bonded to top of MSE facing panel

(P) ¾" Expanded Polystyrene

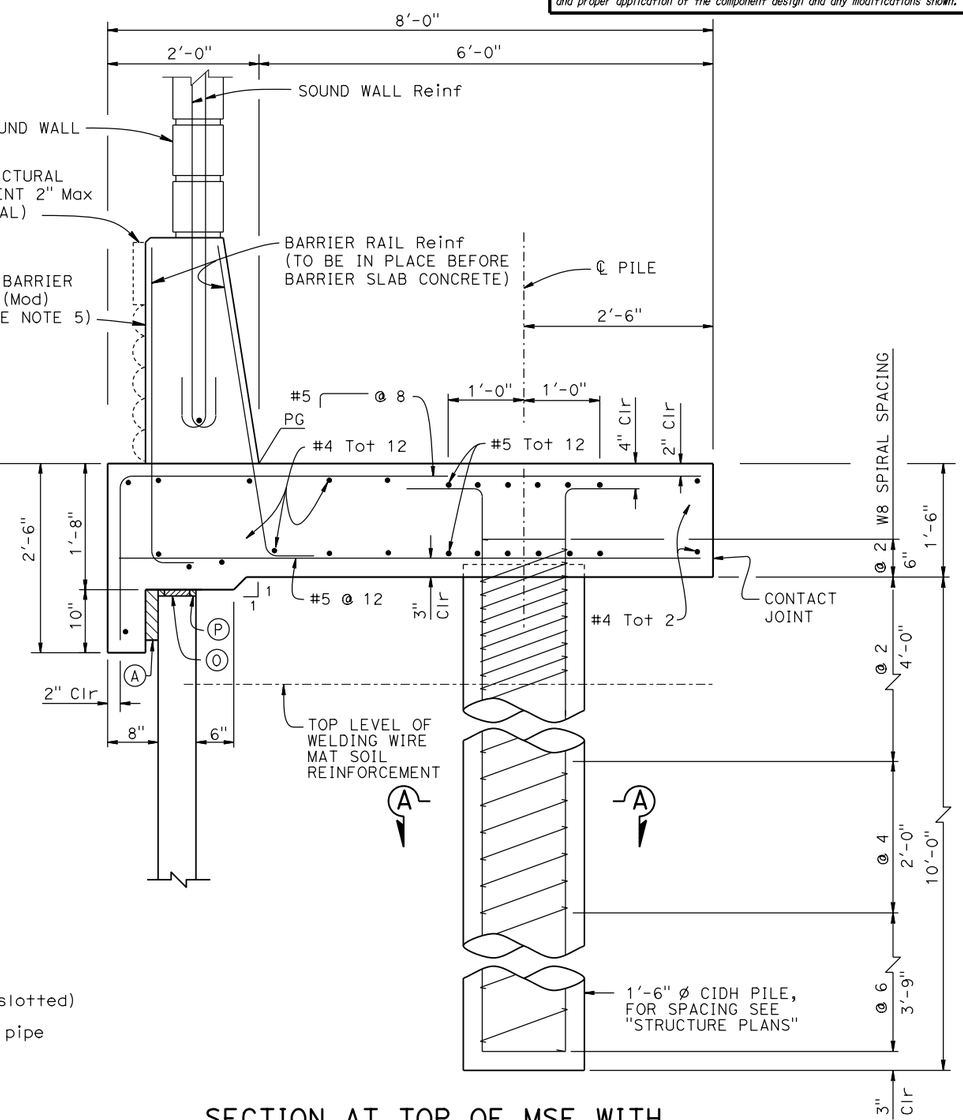

SECTION AT TOP OF MSE WITH SOUND WALL AND CONCRETE BARRIER

1" = 1'-0"

BRIDGE STANDARD DETAILS		
xs13-020-5	July 2014	*The components of the Bridge Standard Details have been prepared under the responsible charge of the Technical Owner, a registered civil engineer in the State of California*
FILE NO.	APPROVAL DATE	

STATE OF CALIFORNIA DEPARTMENT OF TRANSPORTATION

DIVISION OF ENGINEERING SERVICES

BRIDGE NO.

POST MILE

MECHANICALLY STABILIZED EMBANKMENT

DETAILS No. 5

Refer to: http://www.dot.ca.gov/hq/esc/techpubs/manual/bridgemanuals/bridge-standard-detail-sheets/index.html

FILE => xs13-020-5.dgn
USERNAME => s136236 TIME PLOTTED => 16:06 DATE PLOTTED => 14-JUL-2016

ORIGINAL SCALE IN INCHES FOR REDUCED PLANS 0 1 2 3

UNIT:
PROJECT NUMBER & PHASE:
CONTRACT NO.:

DISREGARD PRINTS BEARING EARLIER REVISION DATES

REVISION DATES 6-19-14 7-12-16

SHEET OF