DIST	COUNTY	ROUTE	POST MILES TOTAL PROJECT	SHEET No.	TOTAL SHEETS

REGISTERED CIVIL ENGINEER DATE

PLANS APPROVAL DATE

REGISTERED PROFESSIONAL ENGINEER No. Exp. CIVIL STATE OF CALIFORNIA

The State of California or its officers or agents shall not be responsible for the accuracy or completeness of scanned copies of this plan sheet.

The Registered Civil Engineer for the project is responsible for the selection and proper application of the component design and any modifications shown.

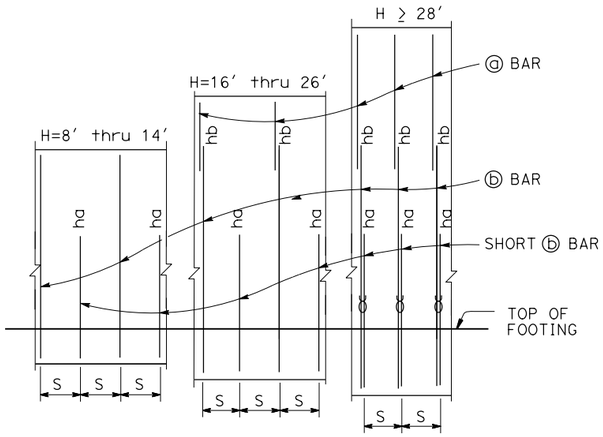

ELEVATION

NO SCALE

NOTES:
"ha", "hb" above ⓑ bars indicate distance from top of footing to upper end of ⓑ bars, see table.
"S" is ⓑ bar spacing, see table.

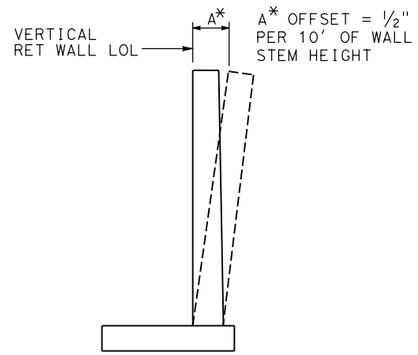

WALL OFFSET

NO SCALE

Values for offsetting forms to be determined by the Engineer.

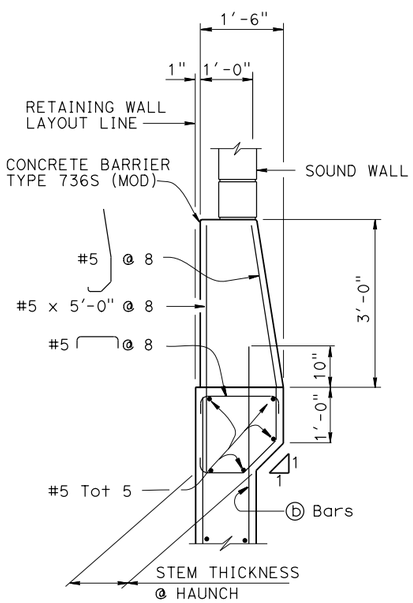

DETAIL A - WITH HAUNCH

NO SCALE

For Details not shown, see "DETAIL A - WITHOUT HAUNCH"

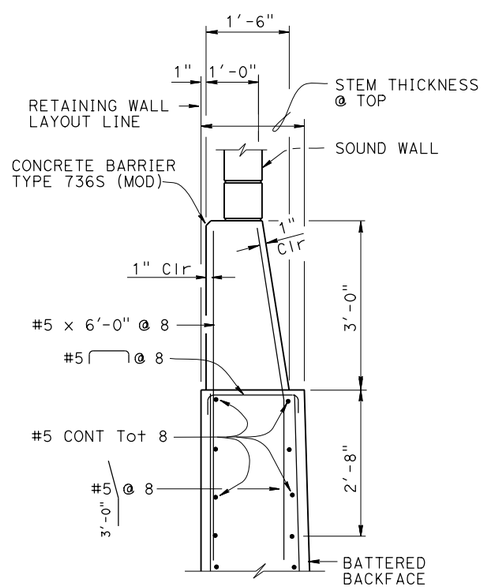

DETAIL A - WITHOUT HAUNCH

NO SCALE

DESIGN DATA

Design: AASHTO LRFD Bridge Design Specifications, 4th edition with California Amendments

WS: 33 psf on Sound wall and Barrier

LS: Varied surcharge on level ground surface

CT: 54 kip maximum traffic impact loading evenly distributed over 10 feet at top of the barrier and 1:1 distribution down and outward

EQE: Mononabe-Okabe Method
K_h = 0.3
K_v = 0.0

Soil: ϕ = 34°
γ = 120 pcf

Reinforced Concrete: f′c = 3600 psi
fy = 60,000 psi

Load Combinations and Limit States

Service I	Q=1.00DC+1.00EV+1.00EH+1.00LS+0.30WS+Td
Service II	Q=1.00DC+1.00EV+1.00EH+1.00WS+Td
Strength I	Q=αDC+βEV+1.50EH+1.75LS+Td
Strength III	Q=αDC+βEV+1.50EH+1.40WS+Td
Strength V	Q=αDC+βEV+1.50EH+1.35LS+0.40WS+Td
Extreme I	Q=1.00DC+1.00EV+1.00EH+1.00EQD+1.00EQE+Td
Extreme II	Q=1.00DC+1.00EV+1.00EH+1.00CT+Td

Where:
Q: Force Effects
α: 1.25 or 0.90, Which ever Controls Design
β: 1.35 or 1.00, which ever Controls Design
DC: Dead Load of Structure Components
EV: Vertical Earth Fill Pressure
LS: Live Load Surcharge
EQE: Seismic Earth Pressure
EQD: Soil and Structure Components Inertia. Soil inertia ignored for stem design
WS: Wind Load on Sound wall and Barrier
CT: Vehicular Collision Force
Td: Anchor Design Load

NOTES:

1. For Sound wall and Retaining wall Architectural finish or texture see Details elsewhere in Project Plans.
2. For details not shown and drainage notes, see (B3-5). Substitution of geocomposite drain for pervious backfill material is not permitted.
3. Footing cover, 2′-0" minimum.
4. For Sound wall and barrier reinforcement details, see "SOUND WALL - MASONRY BLOCK WITH BARRIER ON RETAINING WALL" sheet.
5. For H=6′ through 14′, extend ⓑ bars into Barrier for stem with haunch.
6. Shift ⓑ bars and ⓓ bars as required to clear formed hole for ground anchor.
7. Footing is designed to resist 1.33 Td assuming the maximum anchor spacing shown in the table.

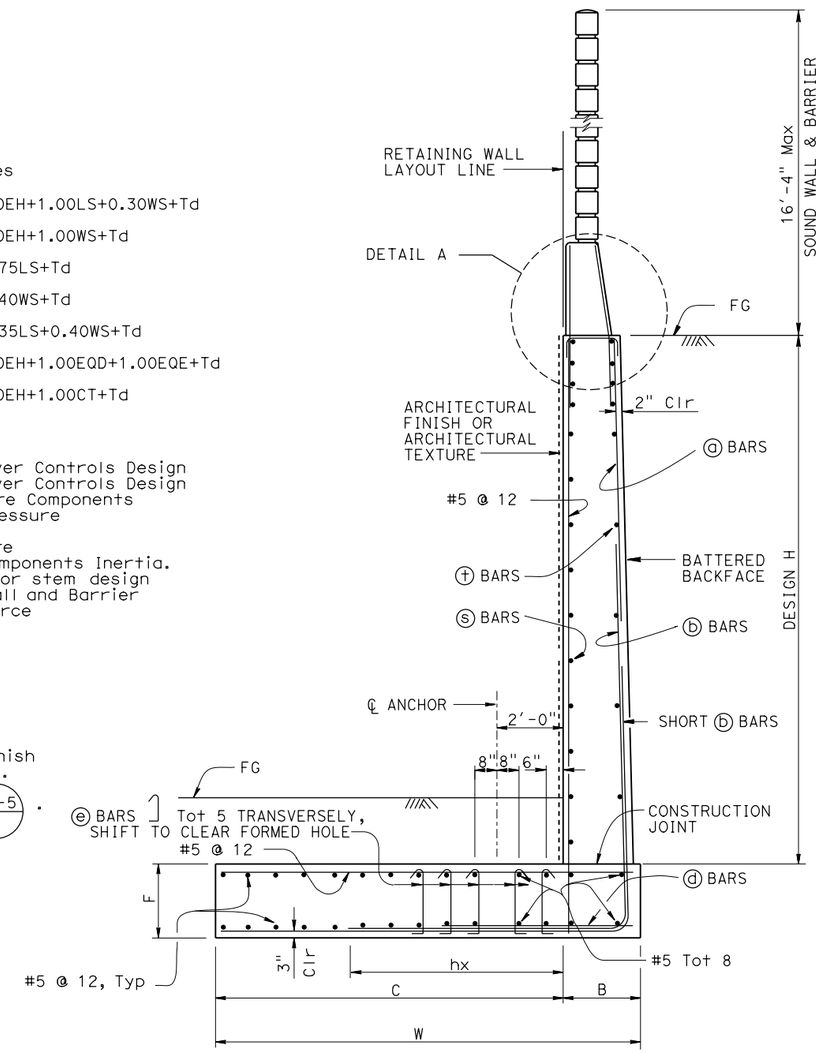

SPREAD FOOTING SECTION

NO SCALE

BRIDGE STANDARD DETAILS		
xs14-390-1	July 2014	*The components of the Bridge Standard Details have been prepared under the responsible charge of the Technical Owner, a registered civil engineer in the State of California*
FILE NO.	APPROVAL DATE	

STATE OF CALIFORNIA DEPARTMENT OF TRANSPORTATION

DIVISION OF ENGINEERING SERVICES

BRIDGE NO.

POST MILE

RETAINING WALL TYPE 7SWB - DETAILS No.1

Refer to: http://www.dot.ca.gov/hq/esc/techpubs/manual/bridgemanuals/bridge-standard-detail-sheets/index.html

FILE => xs14-390-1.dgn
USERNAME => s136236 *TIME PLOTTED => 10:38* *DATE PLOTTED => 18-JUL-2016*

ORIGINAL SCALE IN INCHES FOR REDUCED PLANS 0 1 2 3

UNIT:
PROJECT NUMBER & PHASE:
CONTRACT NO.:

DISREGARD PRINTS BEARING EARLIER REVISION DATES

REVISION DATES: 6-19-14 8-28-15 7-14-16

SHEET OF