DIST	COUNTY	ROUTE	POST MILES TOTAL PROJECT	SHEET No.	TOTAL SHEETS

REGISTERED CIVIL ENGINEER DATE

PLANS APPROVAL DATE

REGISTERED PROFESSIONAL ENGINEER No. Exp. CIVIL STATE OF CALIFORNIA

The State of California or its officers or agents shall not be responsible for the accuracy or completeness of scanned copies of this plan sheet.

The Registered Civil Engineer for the project is responsible for the selection and proper application of the component design and any modifications shown.

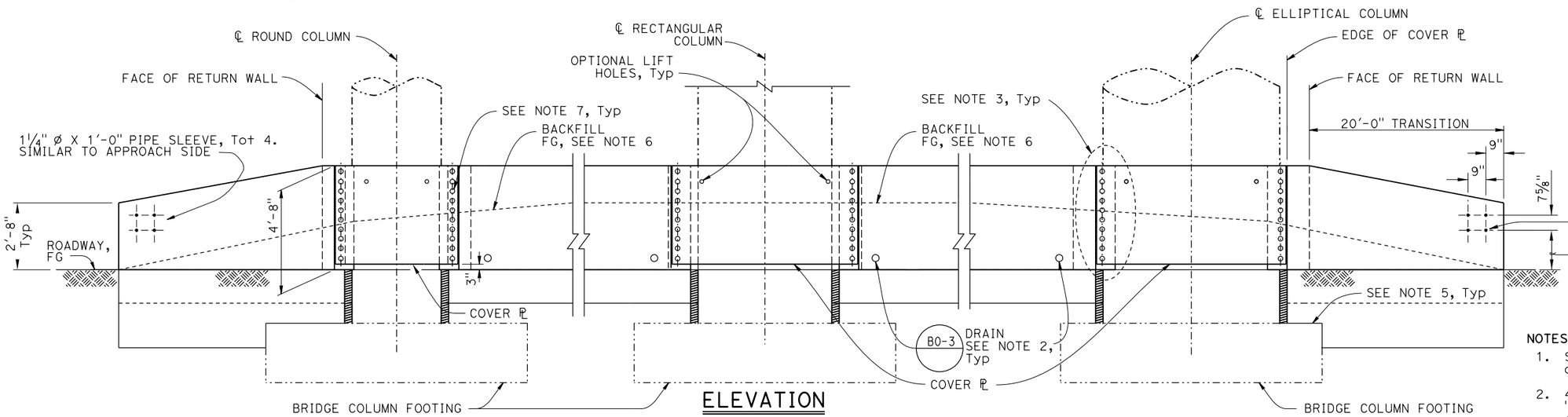

ELEVATION

NO SCALE

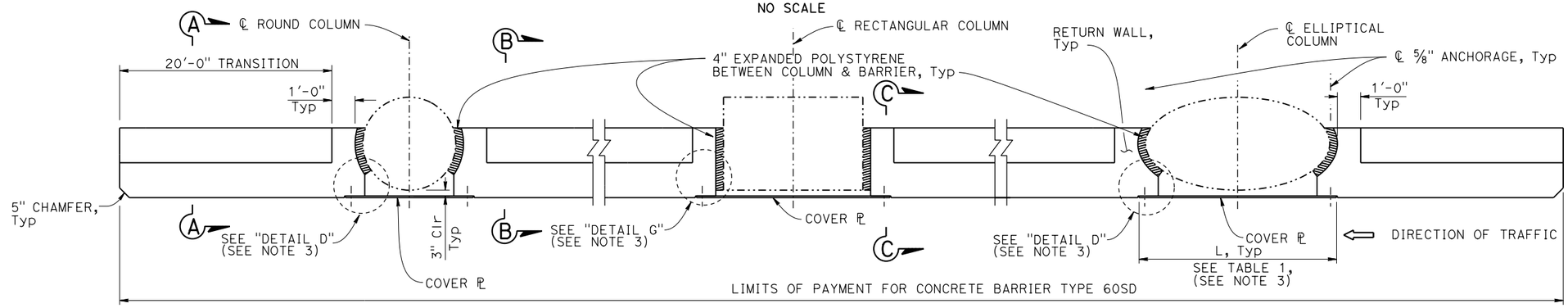

PLAN

NO SCALE

NOTES:

1. See "ROADWAY PLANS" for exact alignment of barrier.
2. 4" ø drains at 9'-0" center to center see "Details No. 2" for proper drainage and gutter details.
3. For "Detail D", "Detail E", "Detail F", "Detail G", "Table 1", "Alternative Anchorage" and "Backfill detaisl, see "CONCRETE BARRIER TYPE 60SD-TRANSITION AT BRIDGE COLUMN-DETAILS No. 2" sheet.
4. Maintain 4" (Min) gap to existing Structure.
5. Where existing bridge footing is encountered, apply bond breaker between bridge footing and new structure.
6. Slope backfill to drain any surface water.
7. All plates & connections must be galvanized.
8. Details are similar for Hexagonal Columns.

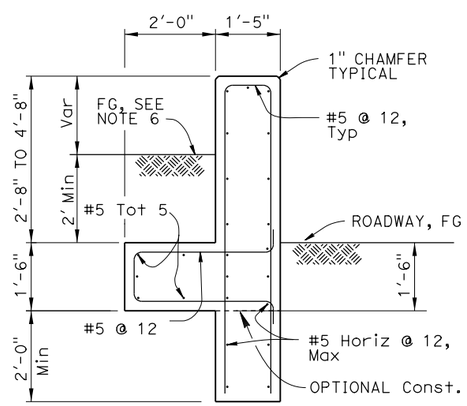

SECTION A-A

NO SCALE

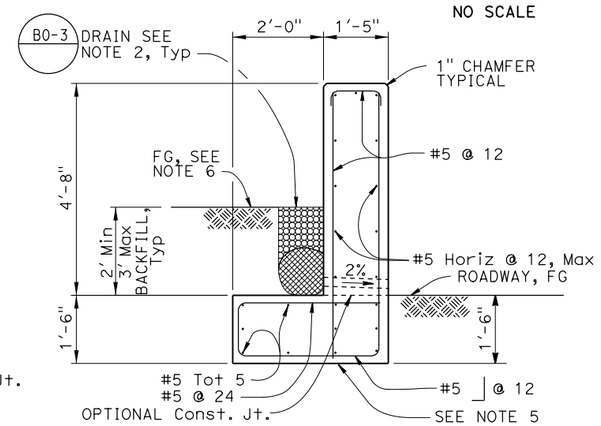

SECTION B-B

NO SCALE

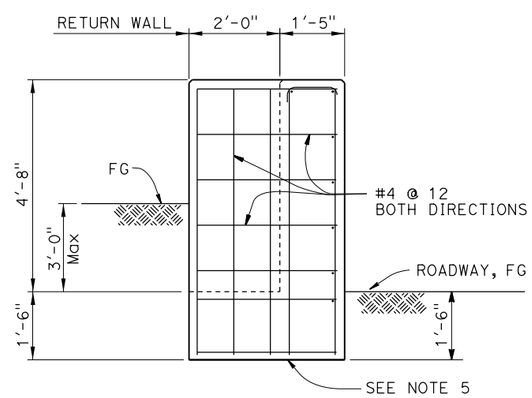

SECTION C-C

NO SCALE

BRIDGE STANDARD DETAILS		
xs16-092-1	October 2014	*The components of the Bridge Standard Details have been prepared under the responsible charge of the Technical Owner, a registered civil engineer in the State of California*
FILE NO.	APPROVAL DATE	

STATE OF CALIFORNIA DEPARTMENT OF TRANSPORTATION

DIVISION OF ENGINEERING SERVICES

BRIDGE NO.

POST MILE

CONCRETE BARRIER TYPE 60SD

TRANSITIONS AT BRIDGE COLUMN-DETAILS No. 1

Refer to: http://www.dot.ca.gov/hq/esc/techpubs/manual/bridgemanuals/bridge-standard-detail-sheets/index.html

FILE => xs16-092-1.dgn
USERNAME => s136236 TIME PLOTTED => 11:54 DATE PLOTTED => 14-JUL-2016

ORIGINAL SCALE IN INCHES FOR REDUCED PLANS 0 1 2 3

UNIT:
PROJECT NUMBER & PHASE: CONTRACT NO.:

DISREGARD PRINTS BEARING EARLIER REVISION DATES

REVISION DATES 10-1-14 10-2-14 7-14-16 SHEET OF