DIST	COUNTY	ROUTE	POST MILES TOTAL PROJECT	SHEET No.	TOTAL SHEETS

REGISTERED CIVIL ENGINEER DATE

PLANS APPROVAL DATE

REGISTERED PROFESSIONAL ENGINEER No. Exp. CIVIL STATE OF CALIFORNIA

The State of California or its officers or agents shall not be responsible for the accuracy or completeness of scanned copies of this plan sheet.

The Registered Civil Engineer for the project is responsible for the selection and proper application of the component design and any modifications shown.

LEGEND:

- A — Wood Pole with Attachments
- —TS— Overhead Bundle with Signal Faces (See Note 2)
- —OH— Overhead Bundle
- Guy Anchor

POLE SELECTION TABLE

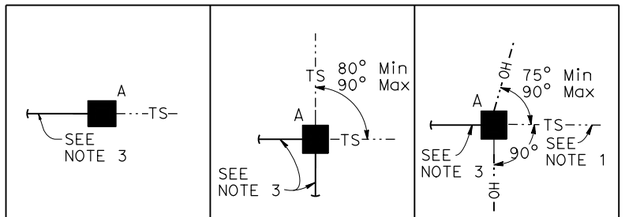

CASE 1GT | CASE 2GT | CASE 3GT

		MAXIMUM dp	1"	1.5"	2.0"	1"	1.5"	2.0"	1"	1.5"	2.0"
OVERHEAD BUNDLE HORIZONTAL SPAN Max	50'	MINIMUM POLE CLASS	H-2	H-3	H-3	H-2	H-2	H-2	H-3	H-4	H-4
		POLE EMBEDMENT (E)	10'			10'			11'		
	100'	MINIMUM POLE CLASS	H-3	H-3	H-4	H-2	H-3	H-3	H-4	H-4	H-5
		POLE EMBEDMENT (E)	11'			10'			11'		
	150'	MINIMUM POLE CLASS	H-3	H-4	H-4	H-2	H-3	H-4	H-4	H-5	H-5
		POLE EMBEDMENT (E)	11'			10'			11'		

NOTES:

1. In addition to other restrictions on maximum horizontal span, this horizontal span must not exceed 100'.
2. Maximum of 2 SIGNAL FACES per span within the hatched regions indicated by "LOCATION OF SIGNAL FACES".
3. Guy wire in line with opposing span ± 5°.

1. CCTV camera assembly or vehicle detection system
2. Overhead bundle consisting of ⅜" ø messenger wire and overhead conductors and lashing wire
3. Luminaire with mast arm
4. Pedestrian push button assembly or accessible push button assembly
5. Signal face with 3 indications or single sheet sign panel (10 SQFT Max)
6. Riser with weather head as required
7. Pull box as required
8. Grounding as required
9. ⅜" ø tether wire
10. ½" ø guy wire with white guy marker and strain insulator. For anchorage see "TEMPORARY WOOD POLES-DETAILS No. 2" sheet
11. Pedestrian signal head

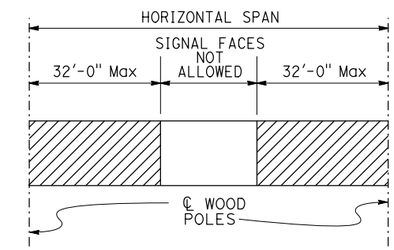

LOCATION OF SIGNAL FACES

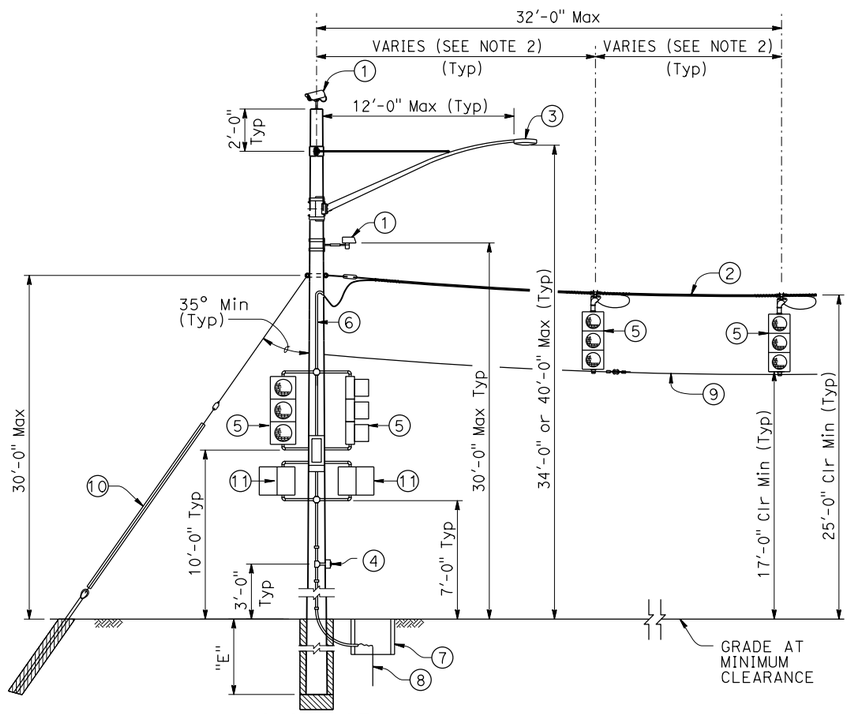

CASE 1GT

POLE AT DEAD END WITH ATTACHMENTS

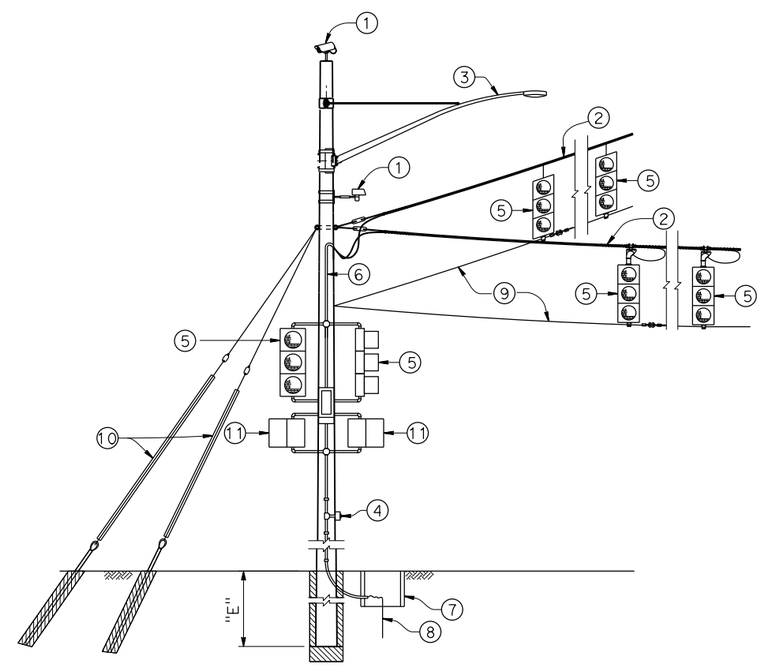

CASE 2GT

POLE AT CORNER WITH ATTACHMENTS

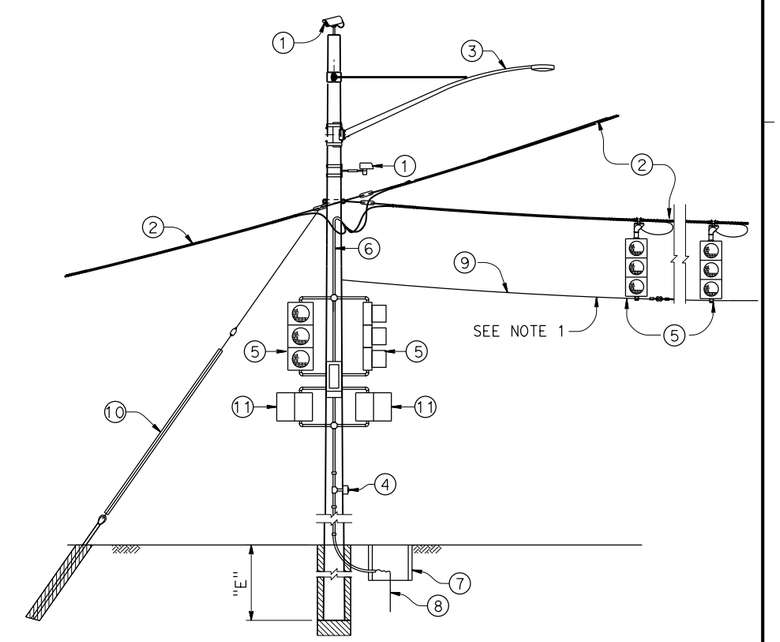

CASE 3GT

POLE AT JUNCTION WITH ATTACHMENTS

NO SCALE

BRIDGE STANDARD DETAILS		
xs18-040	July 2014	*The components of the Bridge Standard Details have been prepared under the responsible charge of the Technical Owner, a registered civil engineer in the State of California*
FILE NO.	APPROVAL DATE	

STATE OF CALIFORNIA DEPARTMENT OF TRANSPORTATION

DIVISION OF ENGINEERING SERVICES

BRIDGE NO.

POST MILE

TEMPORARY WOOD POLES
GUYED-WITH SIGNAL FACES ON SPANS

Refer to: http://www.dot.ca.gov/hq/esc/techpubs/manual/bridgemanuals/bridge-standard-detail-sheets/index.html

FILE => xs18-040.dgn
USERNAME => s136236 *TIME PLOTTED => 08:41* *DATE PLOTTED => 12-JUL-2016*

ORIGINAL SCALE IN INCHES FOR REDUCED PLANS 0 1 2 3

UNIT:
PROJECT NUMBER & PHASE:
CONTRACT NO.:

DISREGARD PRINTS BEARING EARLIER REVISION DATES

REVISION DATES: 6-27-14 7-8-16 | SHEET | OF