DIST	COUNTY	ROUTE	POST MILES TOTAL PROJECT	SHEET No.	TOTAL SHEETS

REGISTERED CIVIL ENGINEER DATE

PLANS APPROVAL DATE

REGISTERED PROFESSIONAL ENGINEER No. Exp. CIVIL STATE OF CALIFORNIA

The State of California or its officers or agents shall not be responsible for the accuracy or completeness of scanned copies of this plan sheet.

The Registered Civil Engineer for the project is responsible for the selection and proper application of the component design and any modifications shown.

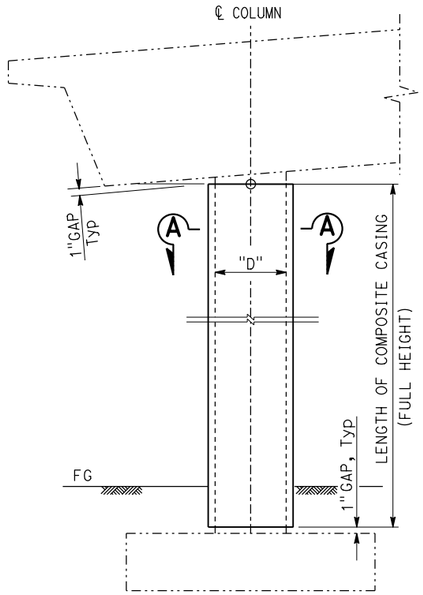

TYPE F
SHEAR COLUMN

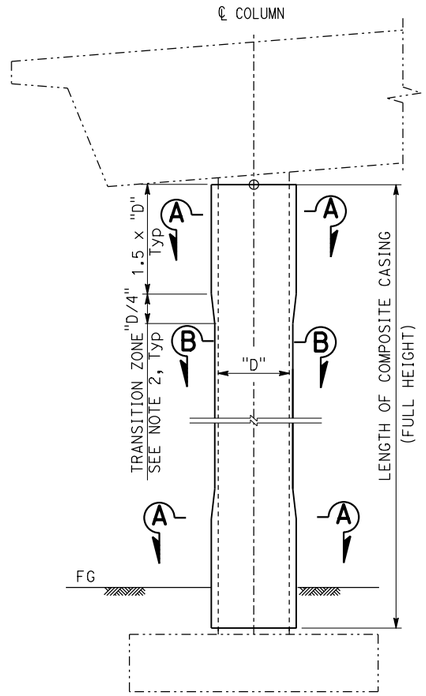

TYPE F
FLEXURAL COLUMN

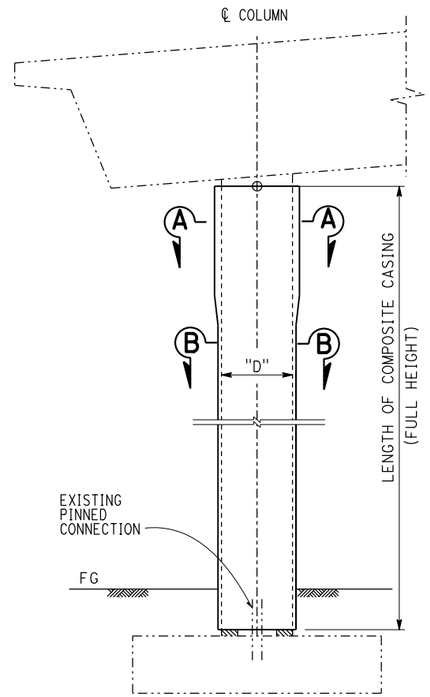

TYPE P/F
FLEXURAL COLUMN

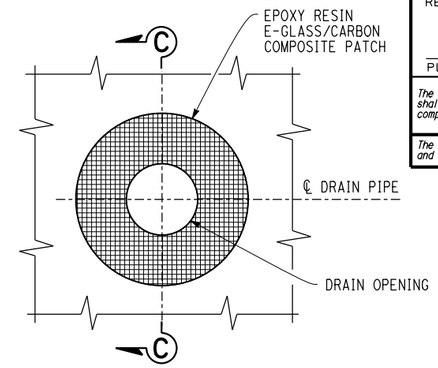

CASING OPENING

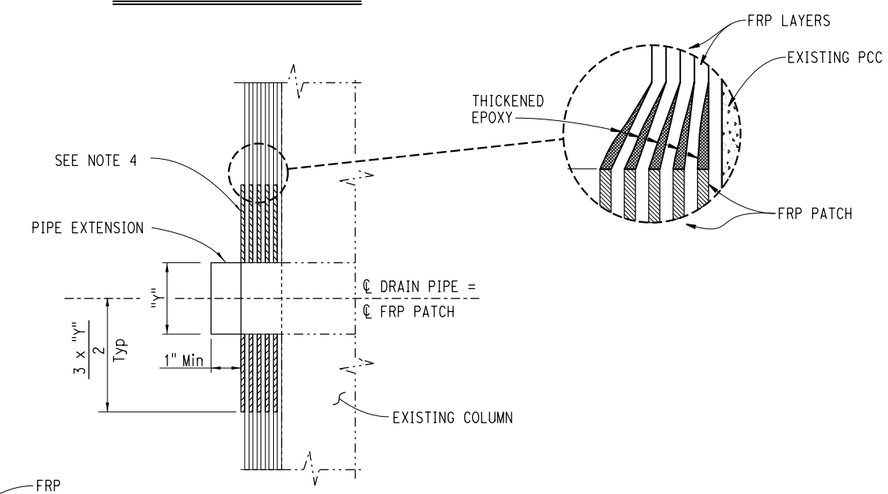

SECTION C-C

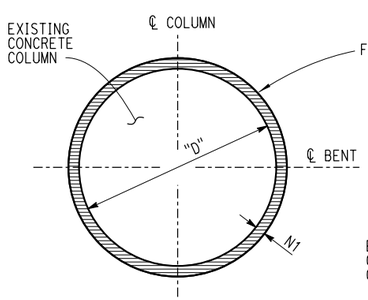

SECTION A-A

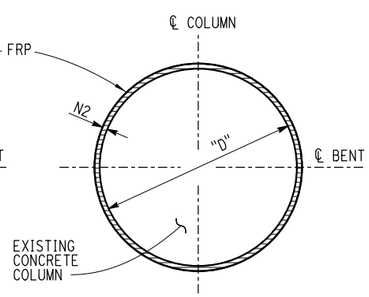

SECTION B-B

CIRCULAR COLUMN SECTION DETAILS

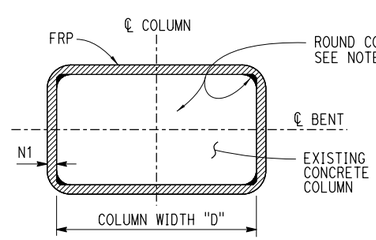

SECTION A-A

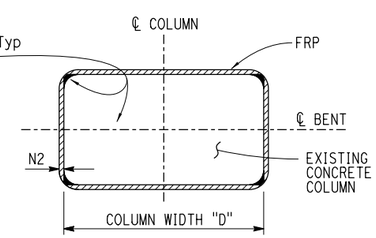

SECTION B-B

RECTANGULAR COLUMN SECTION DETAILS

LEGEND:

-·-·-·- INDICATES EXISTING STRUCTURE

——— INDICATES NEW CONSTRUCTION

N1, N2 DENOTES MINIMUM NUMBER OF LAYERS INSIDE THE PLASTIC HINGE ZONE AND OUTSIDE THE PLASTIC HINGE ZONE

NOTES:

1. For non-circular columns remove any sharp corners/edges to a minimum radius of 1".
2. The casing thickness must taper evenly over the full length of the transition zone.
3. Existing non-circular column surfaces must be straight or slightly convexed outward at all areas, otherwise, the surface must be filled with thickened epoxy.
4. Utility opening reinforcement must be the same fiber and resin material used for the column casing. Alternate continuous layer with local bi-axial weave patch at drainage opening. If existing utility pipe is not protruded 1" outside from the face of casing, pipe extention must be used. See Standard Plans B7-6.

NOTE:

THE CONTRACTOR SHALL VERIFY ALL CONTROLLING FIELD DIMENSIONS BEFORE ORDERING OR FABICATING ANY MATERIAL.

BRIDGE STANDARD DETAILS

xs7-020	July 2014	The components of the Bridge Standard Details have been prepared under the responsible charge of the Technical Owner, a registered civil engineer in the State of California
FILE NO.	APPROVAL DATE	

STATE OF CALIFORNIA DEPARTMENT OF TRANSPORTATION

DIVISION OF ENGINEERING SERVICES

BRIDGE NO.

POST MILE

COLUMN CASING - FRP COMPOSITE SYSTEM

Refer to: http://www.dot.ca.gov/hq/esc/techpubs/manual/bridgemanuals/bridge-standard-detail-sheets/index.html

FILE => xs7-020.dgn
USERNAME => s136236 TIME PLOTTED => 07:27 DATE PLOTTED => 12-JUL-2016

ORIGINAL SCALE IN INCHES FOR REDUCED PLANS 0 1 2 3

UNIT:
PROJECT NUMBER & PHASE: CONTRACT NO.:

DISREGARD PRINTS BEARING EARLIER REVISION DATES

REVISION DATES: 4-14-14 12-16-14 7-8-16 SHEET OF