DIST.	COUNTY	ROUTE	KILOMETER POST TOTAL PROJECT	SHEET NO.	TOTAL SHEETS

Caltrans Metric

REGISTERED ENGINEER - CIVIL

REGISTERED PROFESSIONAL ENGINEER No. Exp. CIVIL STATE OF CALIFORNIA

PLANS APPROVAL DATE

The State of California or its officers or agents shall not be responsible for the accuracy or completeness of electronic copies of this plan sheet.

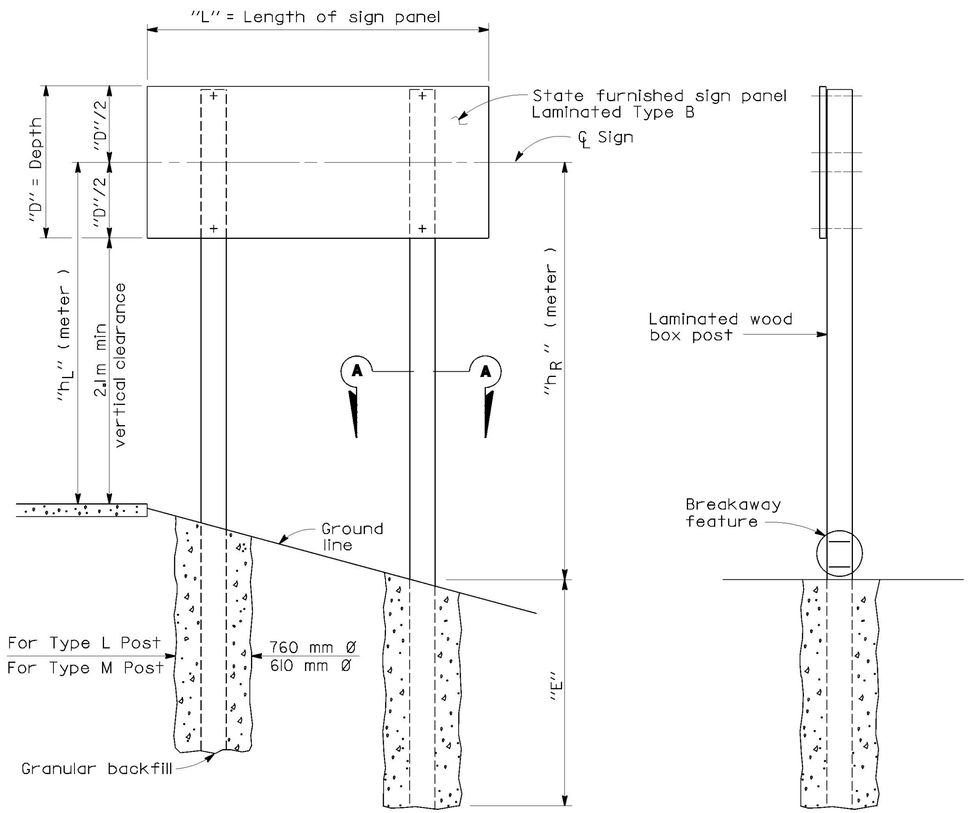

ELEVATION **END VIEW**

TABLE M

MAXIMUM ALLOWABLE "h" FOR TYPE M POST

SIGN DEPTH "D" METERS	SIGN LENGTH "L" (meter) 2.4	2.7	3.0	3.3	3.7	4.0	4.3	4.6	4.9	5.2	5.5	5.8	6.1	6.4	6.7	7.0	7.3
0.6																	
0.8																	7.9
0.9													7.9	7.3	7.0	6.7	6.4
1.1										7.9	7.3	7.0	6.7	6.4	6.1	5.8	5.5
1.2								7.9	7.3	7.0	6.4	6.1	5.8	5.5	5.2	5.2	4.9
1.4						7.9	7.3	7.0	6.4	6.1	5.8	5.5	5.2	4.6	4.6	4.6	4.3
1.5					7.9	7.3	6.7	6.1	5.8	5.5	5.2	4.9	4.6	4.3	4.3	4.0	4.0
1.7				7.9	7.0	6.7	6.1	5.8	5.2	4.9	4.6	4.6	4.3	4.0	4.0	3.7	3.4
1.8			7.9	7.0	6.4	6.1	5.5	5.2	4.9	4.6	4.3	4.0	4.0	3.7	3.4	3.4	3.0
2.0		7.9	7.3	6.7	6.1	5.5	5.2	4.9	4.6	4.3	4.0	3.7	3.7	3.4	3.4	3.0	3.0
2.1		7.3	6.7	6.1	5.5	5.2	4.9	4.3	4.3	4.0	3.7	3.4	3.4	3.0	3.0	2.7	2.7
2.3	7.9	7.0	6.1	5.8	5.2	4.9	4.3	4.0	4.0	3.7	3.4	3.4	3.0	2.7	2.7	2.7	2.4
2.4	7.3	6.4	5.8	5.2	4.9	4.6	4.3	4.0	3.7	3.4	3.0	3.0	2.7	2.7	2.4	2.4	2.4
2.6	7.0	6.1	5.5	4.9	4.6	4.3	4.0	3.7	3.4	3.0	3.0	2.7	2.7	2.4	2.4	2.4	2.1
2.7	6.4	5.8	5.2	4.6	4.3	4.0	3.7	3.4	3.0	3.0	2.7	2.7	2.4	2.4	2.1	2.1	2.1
2.9	6.1	5.5	4.9	4.6	4.0	3.7	3.4	3.4	3.0	2.7	2.7	2.4	2.4	2.1	2.1	2.1	1.8
3.0	5.8	5.2	4.6	4.3	4.0	3.7	3.4	3.0	2.7	2.7	2.4	2.4	2.1	2.1	2.1	1.8	1.8

Maximum "h" is 7.9 m

Vertical clearance is less than 2.1 m

NOTE: Use Type L Posts when value "h" exceeds Table M

POST EMBEDMENT "E" FOR TYPE L POST

"h" meter	TOTAL SIGN AREA (m^2) 3.7 to 8.4	8.4^+ to 13.0	13.0^+ to 17.7	17.7^+ to 22.3	22.3^+ to 27.0
2.7 to 4.0	1.8	2.0	2.3	2.6	2.7
4.0 to 5.2	1.8	2.3	2.4	2.7	3.0
5.2 to 6.4	1.8	2.3	2.7	2.7	
6.4 to 8.0	2.1	2.4	2.7		

(Post embedment for Type M is 1.8 m)

TABLE L

MAXIMUM ALLOWABLE "h" FOR TYPE L POST

SIGN DEPTH "D" METERS	SIGN LENGTH "L" (meters) 5.2	5.5	5.8	6.1	6.4	6.7	7.0	7.3
1.8								
2.0								
2.1								7.9
2.3					7.9	7.9	7.9	7.6
2.4					7.9	7.6	7.3	7.0
2.6				7.9	7.6	7.3	7.0	6.7
2.7			7.9	7.6	7.3	6.7	6.4	6.4
2.9		7.9	7.6	7.0	6.7	6.4	6.1	5.8
3.0	7.9	7.6	7.0	6.7	6.4	6.1	5.8	5.5

Maximum "h" is 7.9 m

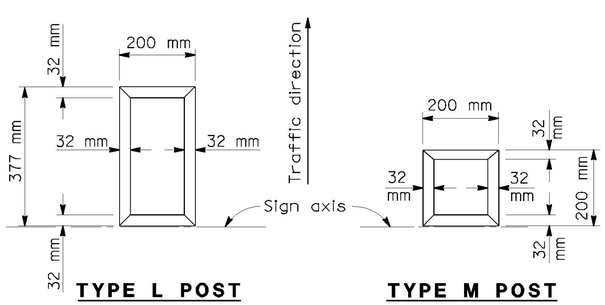

TYPE L POST **TYPE M POST**

SECTION A-A

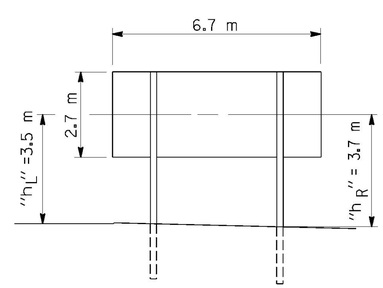

Given:

L = 6.7 m
D = 2.7 m
h = 3.7 m

Enter Table M first:
Maximum allowable "h" is 2.1 m which is less than 3.7 m

Go to Table L:
Maximum allowable is 6.7 m, 3.7 m is ok, use Type L post

EXAMPLE OF HOW TO SELECT POST TYPE

POST SELECTION NOTES:

1. Enter Table M with longer "h". If longer "h" exceeds the table value go to Table L. (Maximum "h" is 7.9 m.) See example.
2. The project plans shall show a list of signs which shows post type and the dimensions "h_L" or "h_R" for each post.
3. Do not mix post types for one sign.
4. To estimate pay length add $\text{"E"} + \text{"h"} + \frac{\text{"D"}}{51 \times 300}$ for each post type.
5. Do not use this sheet for single post signs.
6. For more details of sign and mount refer to standard plan sheet RS3.

THIS SHEET NOT A PART OF CONTRACT PLANS

ROADSIDE SIGNS
LAMINATED WOOD BOX POST TYPE L, TYPE M

POST SELECTION SHEET | **28**