State of California
DEPARTMENT OF TRANSPORTATION

Business, Transportation and Housing Agency

Memorandum

Flex your power!
Be energy efficient!

To: LENA ASHLEY
OFFICE OF DESIGN NORTH
DESIGN BRANCH E-3
EUREKA

Date: May 21, 2013

File: 01-MEN-1-43.3/44.1
01-401101
Albion River Br. #10-0136
Bridge Replacement

From: JEFF SIMS 5/21/2013
Bridge Design Branch 1
Structure Design
Division of Engineering Services MS 9-4/8I

Subject: Advance Planning Study Pricing Update

Attached is the Advance Planning Study pricing update for the Albion River Bridge replacement alternatives that were studied in 2009 (see the APS Transmittal memo from Jeff Sims to Ilene Poindexter dated April 27, 2009).

The estimated construction costs, including 10% mobilization and 25% contingencies, for the Albion River Bridge replacement alternatives are as follows:

Bridge Alternative	Estimated Cost	Estimated Working Days
1A	$29,058,000	240
1B	$45,629,000	260
1C	$25,463,000	240
1D	$33,172,000	250
2A	$27,869,000	260
2B	$43,727,000	280
3A	$35,272,000	510
3B	$44,474,000	550

The estimated costs above do not include the cost of removing the existing bridge, which is estimated at $1,230,700.

The estimated costs above also do not include the cost of temporary railing.

The following table summarizes the projected total structure cost based on a variable escalation rate. The escalated structure cost is provided for informational purposes only and does not replace annual cost updates as required by Department policy.

Years Beyond Midpoint	Escalated Cost Alt. 1A	Escalated Cost Alt. 1B	Escalated Cost Alt. 1C	Escalated Cost Alt. 1D	Escalated Cost Alt. 2A	Escalated Cost Alt. 2B	Escalated Cost Alt. 3A	Escalated Cost Alt. 3B
1	$29,058,000	$45,629,000	$25,463,000	$33,172,000	$27,869,000	$43,727,000	$35,272,000	$44,474,000
2	$29,610,000	$46,496,000	$25,947,000	$33,802,000	$28,399,000	$44,558,000	$35,942,000	$45,319,000
3	$30,409,000	$47,751,000	$26,648,000	$34,715,000	$29,166,000	$45,761,000	$36,912,000	$46,543,000
4	$31,352,000	$49,231,000	$27,474,000	$35,791,000	$30,070,000	$47,180,000	$38,056,000	$47,986,000
5	$32,167,000	$50,511,000	$28,188,000	$36,722,000	$30,852,000	$48,407,000	$39,045,000	$49,234,000

This Advance Planning Study and associated cost estimate is based on the following assumptions:

1. Abutments are supported on multiple 24"diameter cast-in-drilled-hole (CIDH) concrete piles (service state compression = 90 kip/pile, Length = 60 ft/pile)

2. Pier footings are supported on multiple 36"diameter cast-in-steel Shell (CISS) concrete piles (service state compression = 400 kip/pile, Length = 100 ft/pile) for the box girder options on alternatives 1 & 2, and 5'-0" diameter CISS concrete piles (service state compression = 3600 kip/pile) for alternative 3A.

3. For the arch bridge options, the foundation rock voids and fracture density are assumed to be low enough that ground water can be controlled in the mined shaft excavations. Further exploration will be required by Geotechnical Services to determine if this assumption is valid.

4. The deck drainage between the ST-10 traffic barriers is carried in pipes with assumed outlet locations shown on the plan sheets. Drainage of the sidewalk area is assumed to be by scuppers on the left sidewalk and drop-through drains on the right sidewalk. On the two segmental bridge alternatives (Alt 1B and Alt 2B) the only locations where deck drains can fit are at the closures and end portion of span 3 that is cast on falsework. On alternative 1B we were unable to keep the drainage flow from encroaching approximately 6 inches into the lane. If this is not acceptable, possible solutions could be to use scuppers, change the profile grade, or use a wider shoulder.

5. The working day estimates are considered to be a preliminary level of accuracy and without regard to specific information related to construction scheduling, procurement of material, permits, environmental constraints, or specific seasonal work. Standard 8 hours/day, and 5-day weeks are assumed.

If you have any questions or if you need additional information regarding this study, please contact Kevin Harper at (916) 227-8156 or Jeff Sims at (916) 227- 8497.

Attachments

c: ETaddese, Project Liason Engineer MS 9-5/11G
EKurani, Bridge Design Office Chief MS 9-4/11G
MAmini, Technical Liaison Engineer MS 9-1/5C FM2
JChavez, Structure Aesthetics Branch Chief MS 9-3/1H
PWhitfield, Structure Maintenance & Investigations MS 9-1/9I
KWall, HA21 Program Coordinator MS 9-1/9I
JBabcock, Structure Construction MS 9-2/11H
RBibbens, Geotechnical Services MS 5
SNg, Structure Hydraulics & Hydrology MS 9-1/2I

STATE OF CALIFORNIA - DEPARTMENT OF TRANSPORTATION - DIVISION OF STRUCTURES

DIST.	COUNTY	ROUTE	POST MILE
01	MEN	1	43.74

To get to the Caltrans web site, go to: http://www.dot.ca.gov

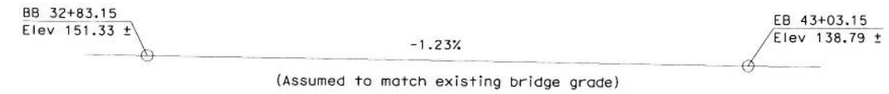

PROFILE GRADE

NO SCALE

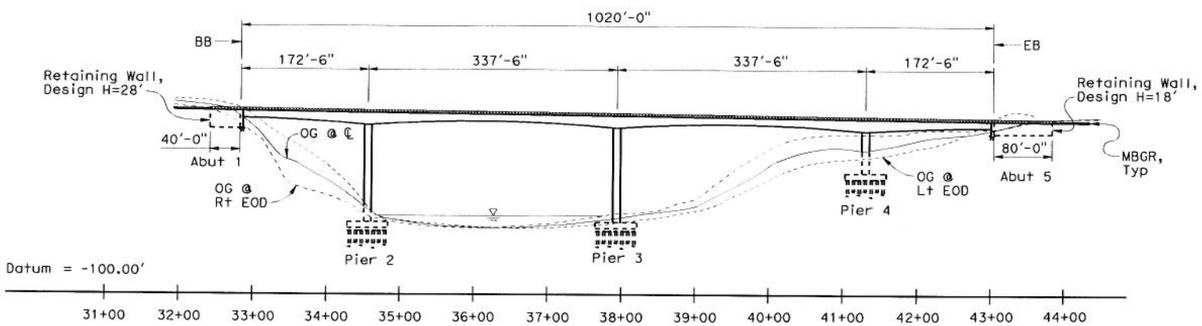

DEVELOPED ELEVATION

1" = 200'

Notes:

1. 24" CIDH Piles, 60 ft (45 ton) assumed @ Abutments
2. 36" CISS Piles, 100 ft (200 ton) assumed @ Piers
3. Traveled way deck drainage carried through Abutment 5. Sidewalk drainage utilizes scuppers and drop-through Drains
4. Seal course concrete and Type A Excavation assumed @ Piers 2 & 3

Legend:

- - - - - Indicates Existing Structure
- Indicates Deck Drain Type D-3 (traveled way drainage system)

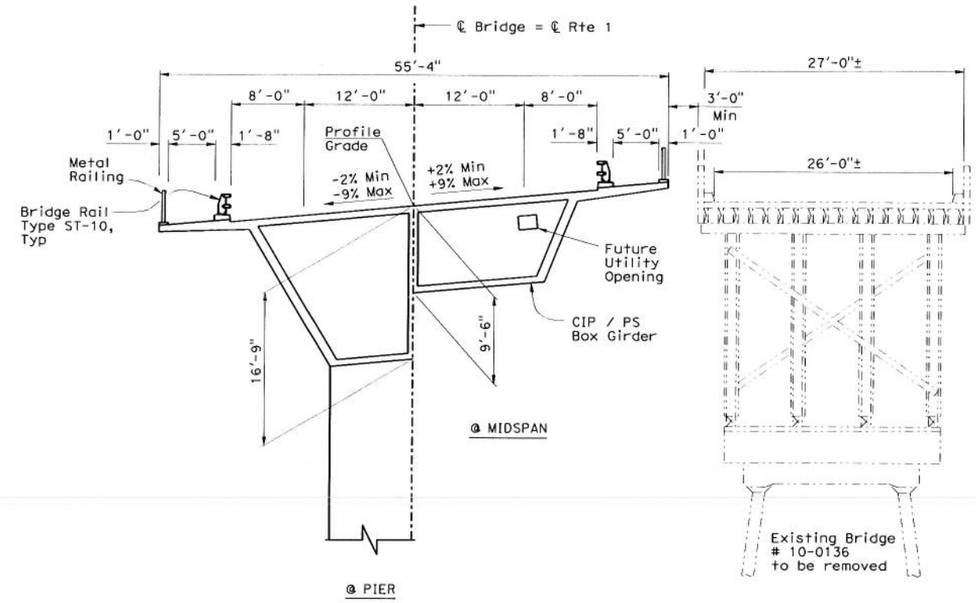

TYPICAL SECTION

1/16" = 1'-0"

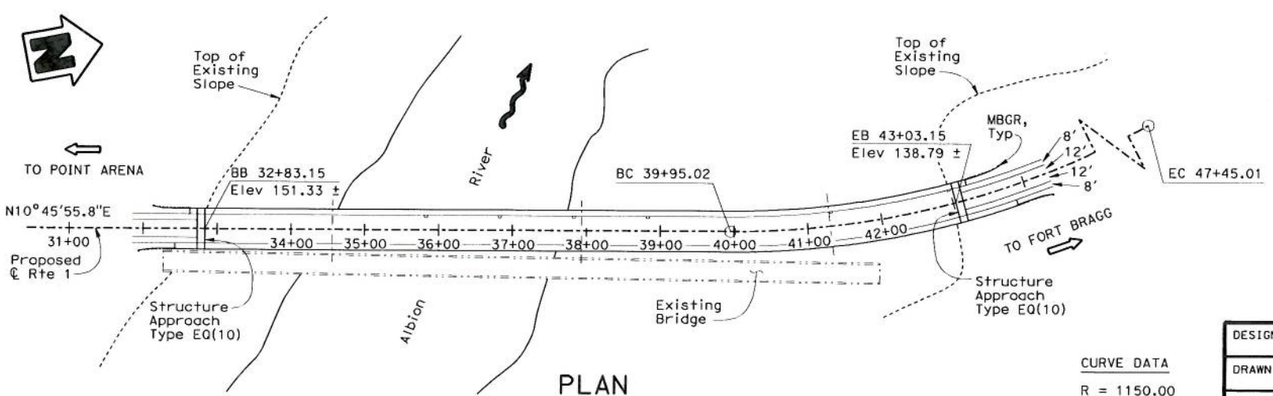

PLAN

1" = 200'

CURVE DATA

R = 1150.00
Δ = 37°21'59.7"
T = 388.88
L = 750.00

Date of Estimate	~~4-27-09~~ 5-17-13
Str. Depth	= Varies
Length	= 1020 ft
Width	= 55'-4"
Area	= 56,440 ft²
Cost/sq ft including 10% Mobilization & 25% Contingency	= ~~$545/sq ft~~ $515/sq ft
Total Cost	= ~~$30,747,400~~ $29,058,000

DESIGNED BY Daniel Sessions	DATE 12/30/08	STRUCTURE DESIGN BRANCH 1	ALTERNATIVE 1A
DRAWN BY Bob Huddleston	DATE 12/30/08		PLANNING STUDY
CHECKED BY Kevin Harper	DATE 2/4/09		ALBION RIVER BR (REPLACE)
APPROVED Jeff Sims	DATE 2/4/09		BRIDGE NO. 10-136 / CU 01 / SCALE: AS SHOWN / EA 40110K

STRUCTURES DESIGN ADVANCE PLANNING STUDY SHEET (ENGLISH) (REV. 10/25/05)

FILE => albion_river_apsta.dgn

USERNAME => jzhou DATE PLOTTED => 23-APR-2009 TIME PLOTTED => 10:08

STATE OF CALIFORNIA - DEPARTMENT OF TRANSPORTATION - DIVISION OF STRUCTURES

DIST.	COUNTY	ROUTE	POST MILE
01	MEN	1	43.74

To get to the Caltrans web site, go to: http://www.dot.ca.gov

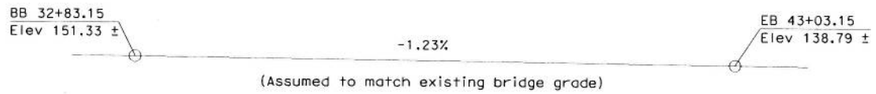

PROFILE GRADE

NO SCALE

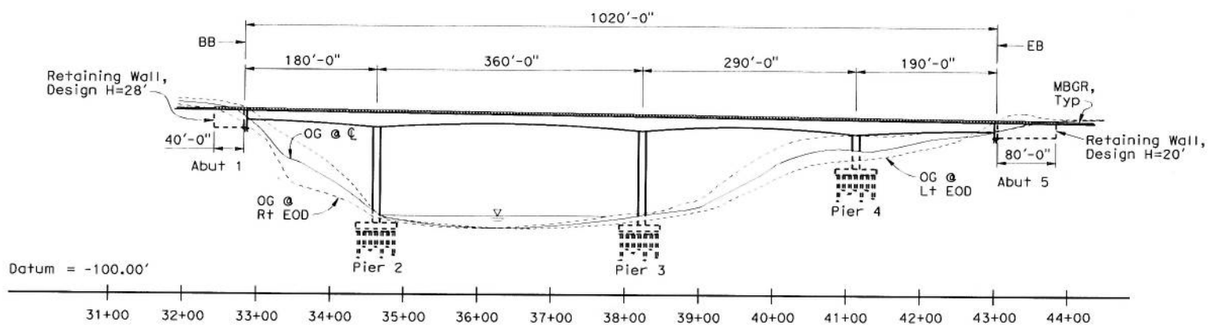

DEVELOPED ELEVATION

1" = 200'

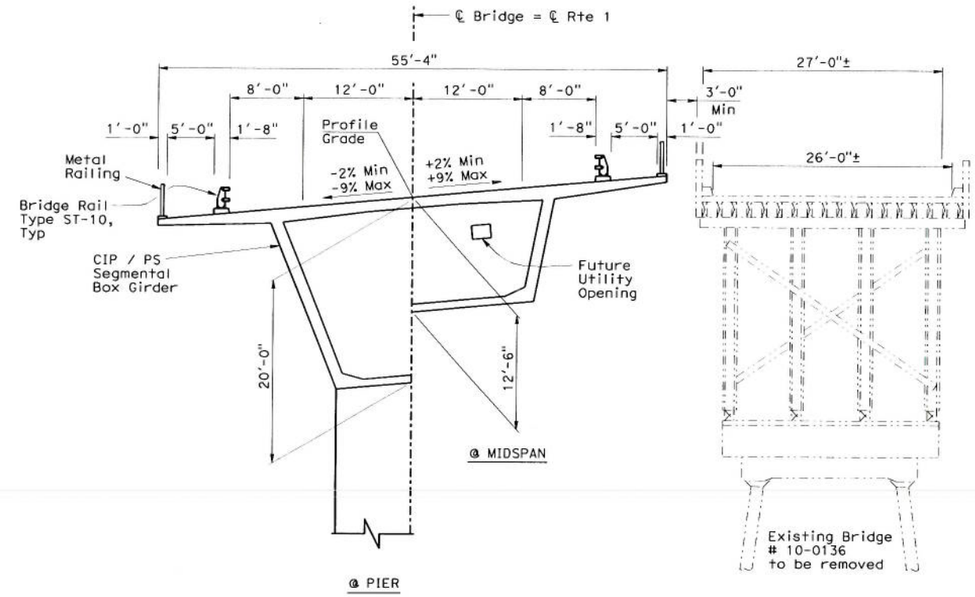

TYPICAL SECTION

1/16" = 1'-0"

Notes:

1. 24" CIDH Piles, 60 ft (45 ton) assumed @ Abutments
2. 36" CISS Piles, 100 ft (200 ton) assumed @ Piers
3. Bridge assumed to be constructed segmentally by the balanced cantilever method
4. Traveled way deck drainage carried through Abutment 5 (drainage flow encroaches 6" into lane). Sidewalk drainage utilizes scuppers and drop-through drains
5. Seal course concrete and Type A Excavation assumed @ Piers 2 & 3

Legend:

- - - - - Indicates Existing Structure
▪ Indicates Deck Drain, Type C (traveled way drainage system)

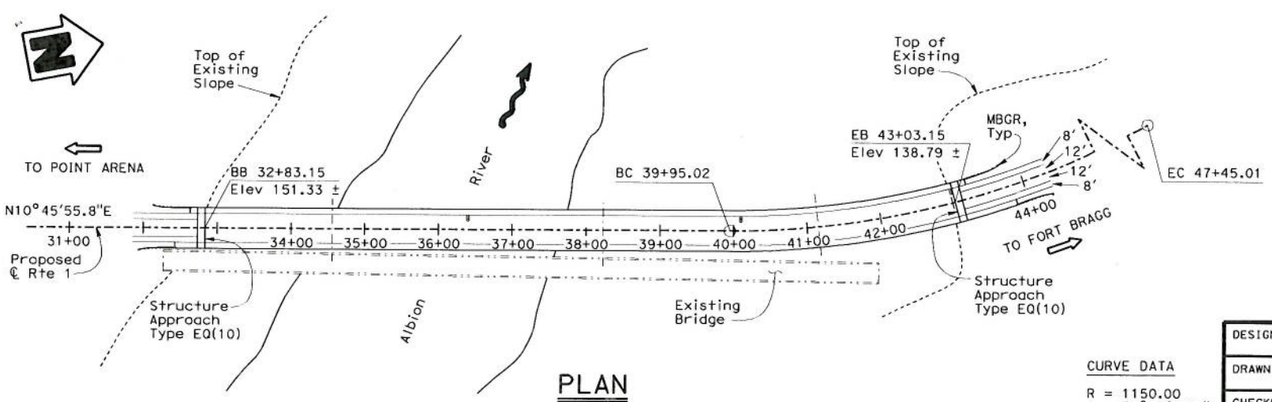

PLAN

1" = 200'

CURVE DATA

R = 1150.00
Δ = 37°21'59.7"
T = 388.88
L = 750.00

Date of Estimate	~~4-27-09~~ 5-17-13
Str. Depth	Varies
Length	1020 ft
Width	55'-4"
Area	56,440 ft²
Cost/sq ft including	
10% Mobilization &	~~$788/sq ft~~ $808/sq ft
25% Contingency	~~$44,456,200~~ $45,629,000
Total Cost	

DESIGNED BY	Daniel Sessions	DATE	12/30/08
DRAWN BY	Bob Huddleston	DATE	1/6/09
CHECKED BY	Kevin Harper	DATE	2/4/09
APPROVED	Jeff Sims	DATE	2/4/09

STRUCTURE DESIGN BRANCH 1

ALTERNATIVE 1B

PLANNING STUDY

ALBION RIVER BR (REPLACE)

BRIDGE NO. 10-136	CU 01
SCALE: AS SHOWN	EA 40110K

USERNAME => jzhou DATE PLOTTED => 23-APR-2009 TIME PLOTTED => 10:08

FILE => albion_river_aps1b.dgn

STRUCTURES DESIGN ADVANCE PLANNING STUDY SHEET (ENGLISH) (REV. 10/25/05)

STATE OF CALIFORNIA - DEPARTMENT OF TRANSPORTATION - DIVISION OF STRUCTURES

DIST.	COUNTY	ROUTE	POST MILE
01	MEN	1	43.74

To get to the Caltrans web site, go to: http://www.dot.ca.gov

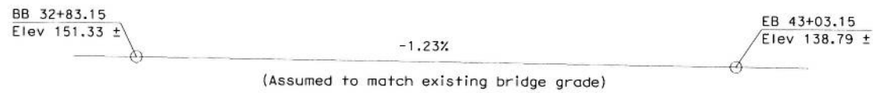

PROFILE GRADE

NO SCALE

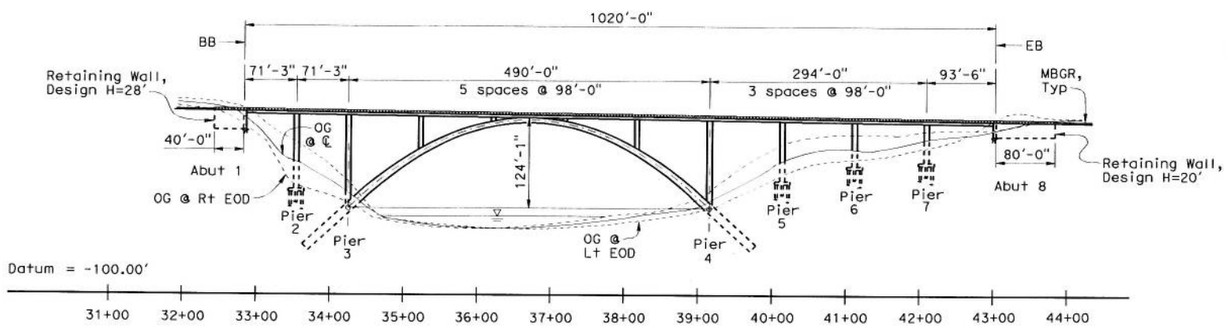

DEVELOPED ELEVATION

1" = 200'

Notes:

1. 24" CIDH Piles, 60 ft (45 ton) assumed @ Abutments
2. 36" CISS Piles, 100 ft (200 ton) assumed @ Piers
3. Rock voids and fracture density assumed to be low enough that ground water can be controlled at the arch mined shaft foundations.
4. Traveled way deck drainage carried through Pier 5 & Abutment 8. Sidewalk drainage utilizes scuppers and drop-through Drains

Legend:

- - - - - Indicates Existing Structure
- Indicates Deck Drain Type D-3 (traveled way drainage system)

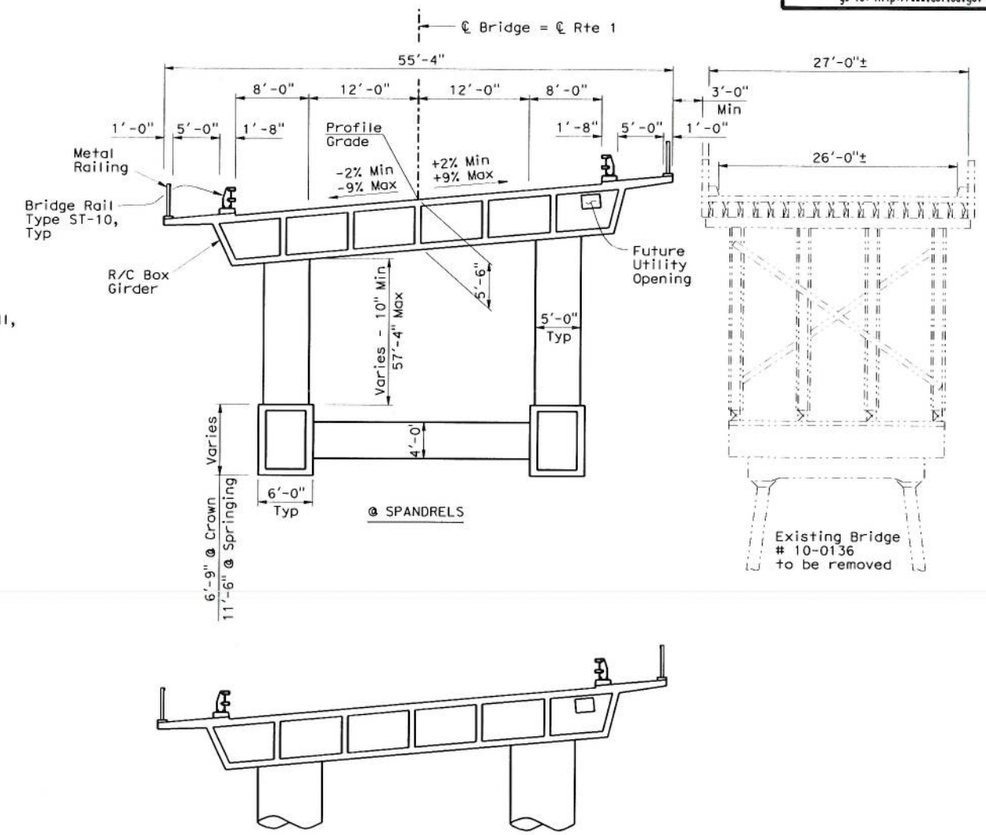

TYPICAL SECTION

1/16" = 1'-0"

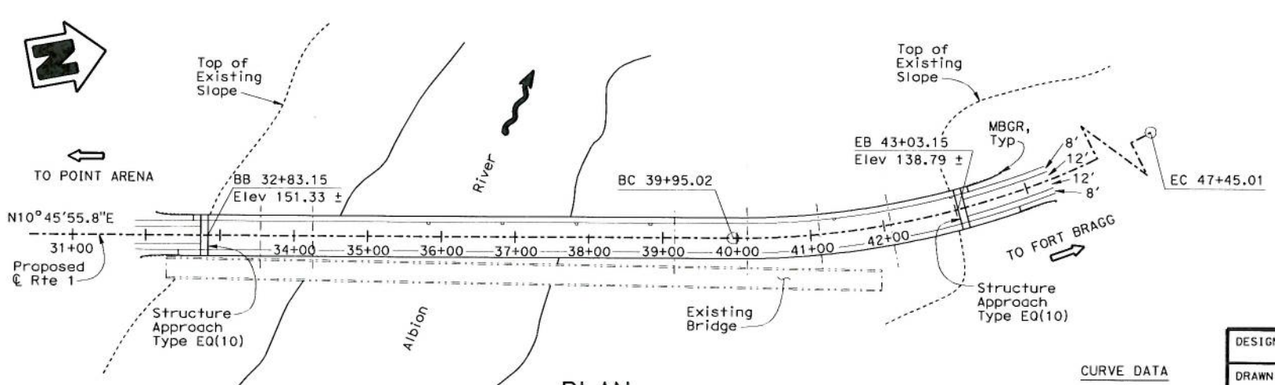

PLAN

1" = 200'

CURVE DATA

R = 1150.00
Δ = 37°21'59.7"
T = 388.88
L = 750.00

Date of Estimate	~~4-27-09~~ 5-17-13
Str. Depth	= Box = 5.5 ft, Arch = 6.75 to 11.5 ft
Length	= 1020 ft
Width	= 55'-4"
Area	= 56,440 ft²
Cost/sq ft including 10% Mobilization & 25% Contingency	$451/sq ft ~~$459/sq ft~~
Total Cost	= ~~$25,914,800~~ $25,463,000

DESIGNED BY Daniel Sessions	DATE 12/30/08	STRUCTURE DESIGN BRANCH 1	ALTERNATIVE 1C
DRAWN BY Bob Huddleston	DATE 1/7/09		PLANNING STUDY
CHECKED BY Kevin Harper	DATE 2/4/09		ALBION RIVER BR (REPLACE)
APPROVED Jeff Sims	DATE 2/4/09		BRIDGE NO. 10-136 / CU 01
			SCALE: AS SHOWN / EA 40110K

USERNAME => jzhou DATE PLOTTED => 23-APR-2009 TIME PLOTTED => 10:08

FILE => albion_river_apstc.dgn

STRUCTURES DESIGN ADVANCE PLANNING STUDY SHEET (ENGLISH) (REV. 10/25/05)

STATE OF CALIFORNIA - DEPARTMENT OF TRANSPORTATION - DIVISION OF STRUCTURES

DIST.	COUNTY	ROUTE	POST MILE
01	MEN	1	43.74

To get to the Caltrans web site, go to: http://www.dot.ca.gov

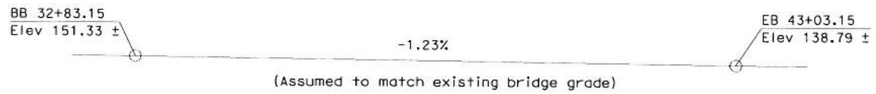

PROFILE GRADE

NO SCALE

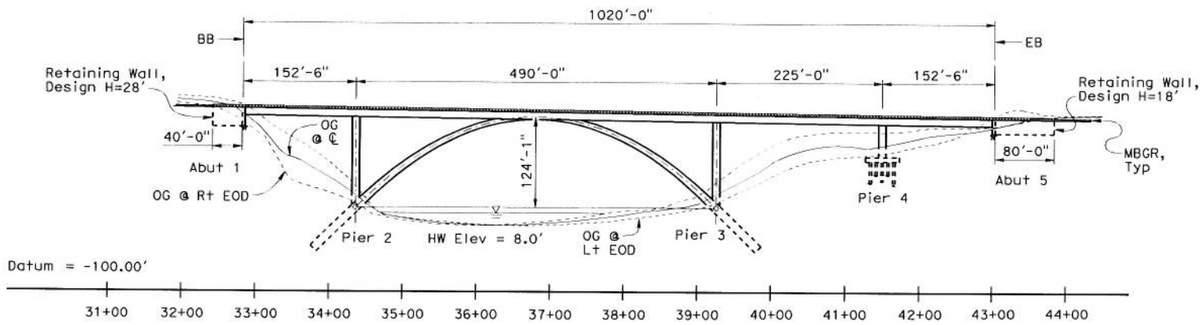

DEVELOPED ELEVATION

1" = 200'

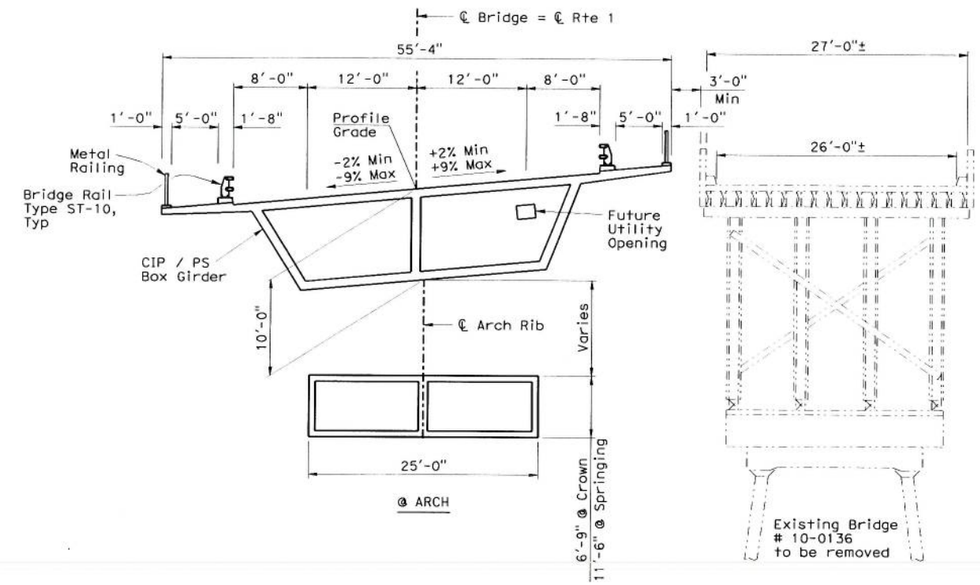

Notes:

1. 24" CIDH Piles, 60 ft (45 ton) assumed @ Abutments
2. 36" CISS Piles, 100 ft (200 ton) assumed @ Piers
3. Traveled way deck drainage carried through Abutment 5. Sidewalk drainage utilizes scuppers and drop-through Drains
4. Rock voids and fracture density assumed to be low enough that ground water can be controlled at the arch mined shaft foundations

Legend:

Indicates Existing Structure

Indicates Deck Drain Type D-3 (traveled way drainage system)

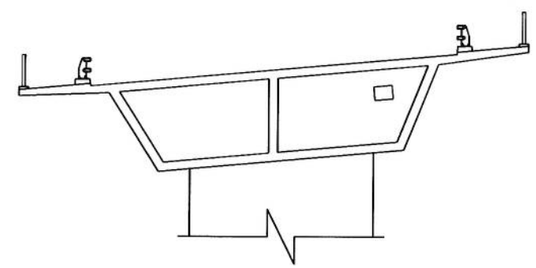

@ PIER 4

TYPICAL SECTION

1/16" = 1'-0"

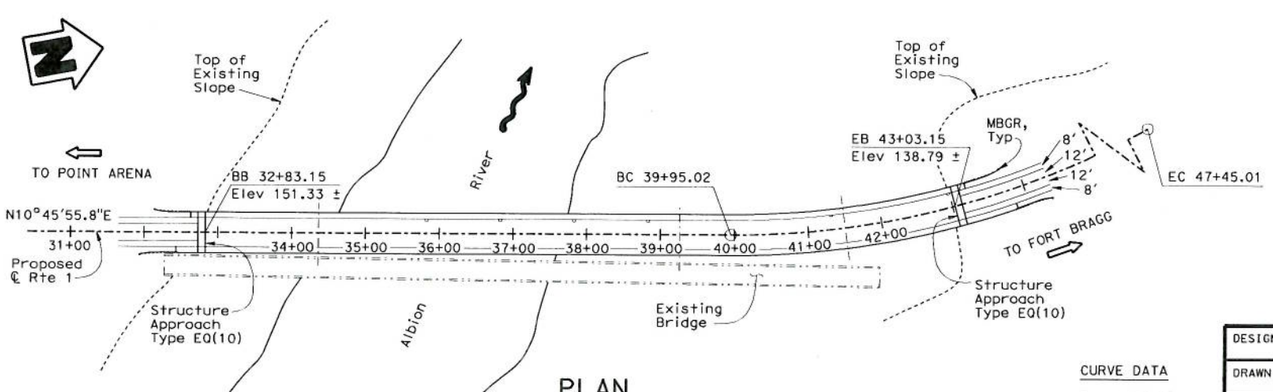

PLAN

1" = 200'

CURVE DATA

R = 1150.00
Δ = 37°21'59.7"
T = 388.88
L = 750.00

Date of Estimate	~~4-27-09~~ 5-17-13
Str. Depth	Box = 10.0 ft, Arch = 6.75 to 11.5 ft
Length	1020 ft
Width	55'-4"
Area	56,440 ft²
Cost/sq ft including 10% Mobilization & 25% Contingency	~~$591/sq ft~~ $588/sq ft.
Total Cost	~~$32,372,400~~ $33,172,000

DESIGNED BY Daniel Sessions	DATE 12/30/08
DRAWN BY Bob Huddleston	DATE 1/8/09
CHECKED BY Kevin Harper	DATE 2/4/09
APPROVED Jeff Sims	DATE 2/4/09

STRUCTURE DESIGN BRANCH 1

ALTERNATIVE 1D

PLANNING STUDY

ALBION RIVER BR (REPLACE)

BRIDGE NO. 10-136	CU 01
SCALE: AS SHOWN	EA 40110K

USERNAME => jzhou DATE PLOTTED => 23-APR-2009 TIME PLOTTED => 10:08

STRUCTURES DESIGN ADVANCE PLANNING STUDY SHEET (ENGLISH) (REV. 10/25/05)

FILE => albion_river_opsld.dgn

STATE OF CALIFORNIA - DEPARTMENT OF TRANSPORTATION - DIVISION OF STRUCTURES

DIST.	COUNTY	ROUTE	POST MILE
01	MEN	1	43.74

To get to the Caltrans web site, go to: http://www.dot.ca.gov

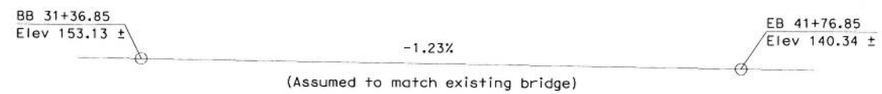

PROFILE GRADE

NO SCALE

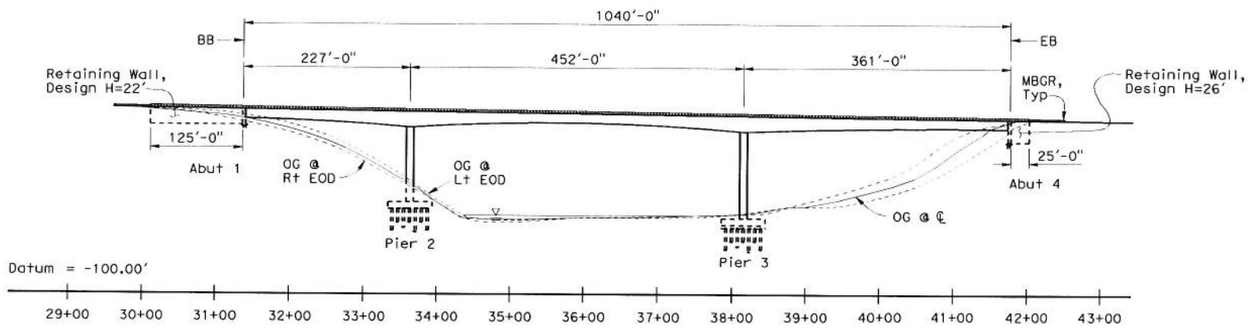

DEVELOPED ELEVATION

1" = 200'

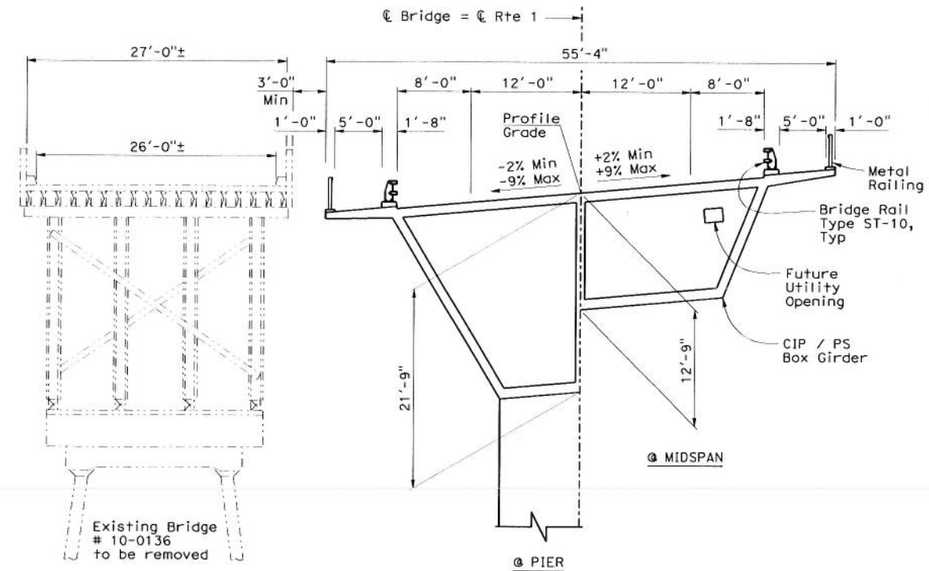

TYPICAL SECTION

1/16" = 1'-0"

Notes:

1. 24" CIDH Piles, 60 ft (45 ton) assumed @ Abutments
2. 36" CISS Piles, 100 ft (200 ton) assumed @ Piers
3. Traveled way deck drainage carried through Abutment 4. Sidewalk drainage utilizes scuppers and drop-through Drains
4. Type D Excavation assumed @ Pier 2
5. Seal Course concrete and Type A Excavation assumed @ Pier 3

Legend:

- - - - - Indicates Existing Structure
- Indicates Deck Drain Type D-3 (traveled way drainage system)

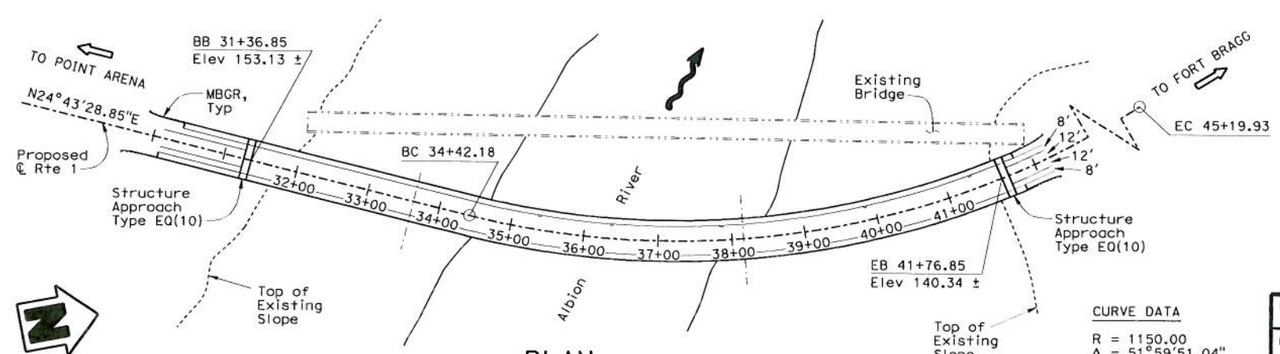

PLAN

1" = 200'

CURVE DATA

R = 1150.00
Δ = 51°59'51.04"
T = 560.86
L = 1043.66

Date of Estimate	~~4-27-09~~ 5-17-13
Str. Depth	Varies
Length	1040 ft
Width	55'-4"
Area	57,547 ft²
Cost/sq ft including	
10% Mobilization &	
25% Contingency	~~$458/sq ft~~ $484/sq ft.
Total Cost	~~$26,378,000~~ $27,869,000

DESIGNED BY	Daniel Sessions	DATE	12/30/08
DRAWN BY	Bob Huddleston	DATE	1/26/09
CHECKED BY	Kevin Harper	DATE	2/4/09
APPROVED	Jeff Sims	DATE	2/4/09

STRUCTURE DESIGN BRANCH 1

ALTERNATIVE 2A

PLANNING STUDY

ALBION RIVER BR (REPLACE)

BRIDGE NO. 10-136	CU 01
SCALE: AS SHOWN	EA 40110K

USERNAME => jzhou DATE PLOTTED => 23-APR-2009 TIME PLOTTED => 10:09

STRUCTURES DESIGN ADVANCE PLANNING STUDY SHEET (ENGLISH) (REV. 10/25/05)

FILE => albion_river_aps2a.dgn

STATE OF CALIFORNIA - DEPARTMENT OF TRANSPORTATION - DIVISION OF STRUCTURES

DIST.	COUNTY	ROUTE	POST MILE
01	MEN	1	43.74

To get to the Caltrans web site, go to: http://www.dot.ca.gov

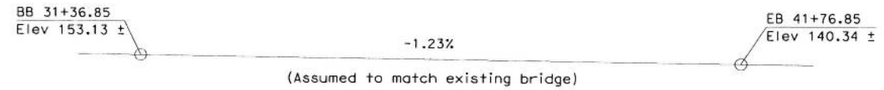

PROFILE GRADE

NO SCALE

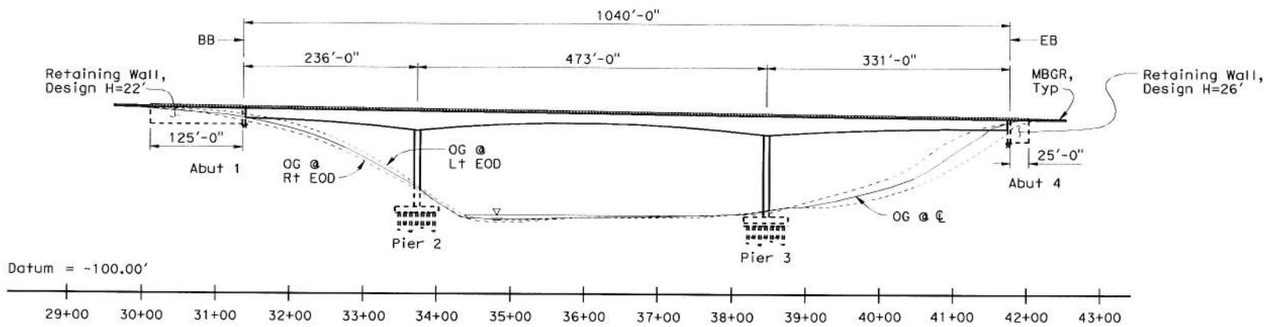

DEVELOPED ELEVATION

1" = 200'

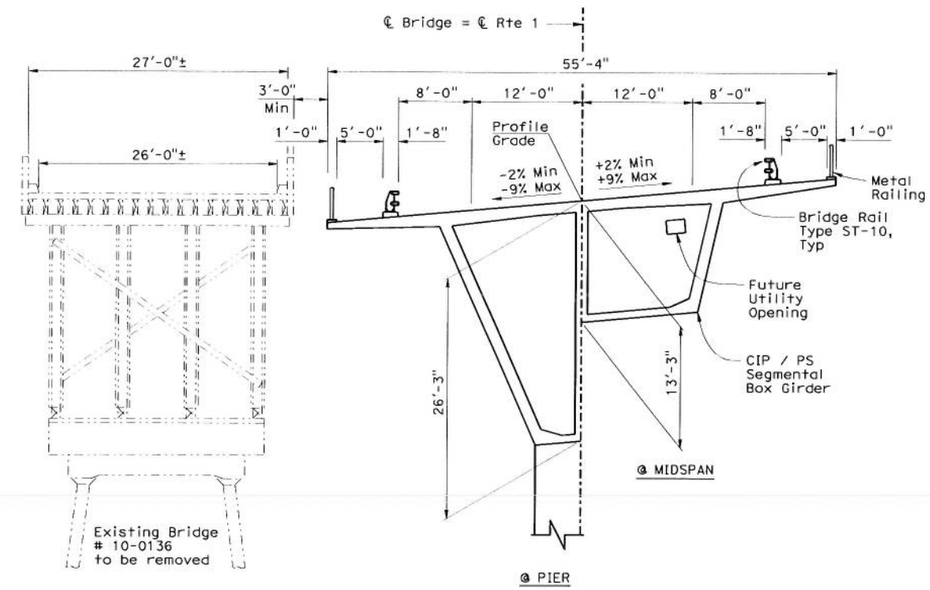

TYPICAL SECTION

1/16" = 1'-0"

Notes:

1. 24" CIDH Piles, 60 ft (45 ton) assumed @ Abutments
2. 36" CISS Piles, 100 ft (200 ton) assumed @ Piers
3. Bridge assumed to be constructed segmentally by the balanced cantilever method
4. Traveled way deck drainage carried through Abutment 4. Sidewalk drainage utilizes scuppers and drop-through Drains
5. Type D Excavation assumed @ Pier 2
6. Seal Course concrete and Type A Excavation assumed @ Pier 3

Legend:

Indicates Existing Structure

Indicates Deck Drain, Type C (traveled way drainage system)

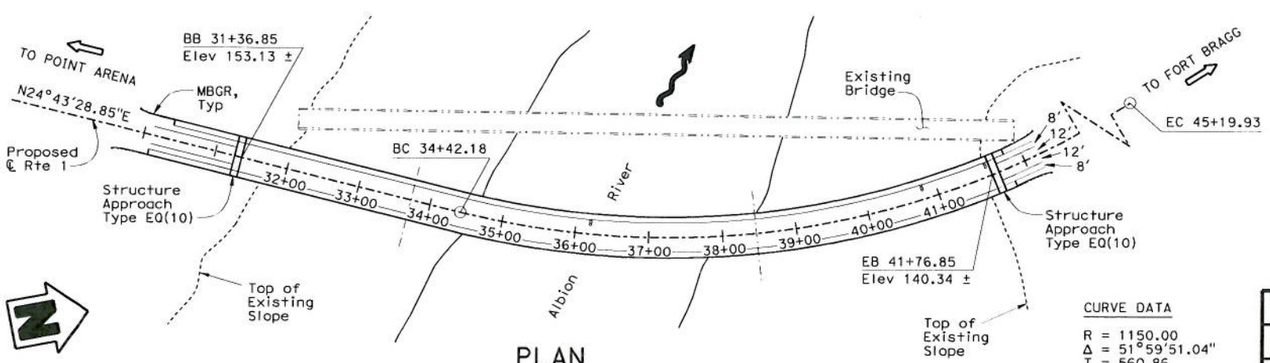

PLAN

1" = 200'

CURVE DATA

R = 1150.00
Δ = 51°59'51.04"
T = 560.86
L = 1043.66

Date of Estimate	~~4-27-09~~ 5-17-13
Str. Depth	= Varies
Length	= 1040 ft
Width	= 55'-4"
Area	= 57,546 ft²
Cost/sq ft including 10% Mobilization & 25% Contingency	= ~~$714/sq ft~~ $760/sq ft.
Total Cost	= ~~$41,060,900~~ $43,727,000

DESIGNED BY Daniel Sessions	DATE 12/30/08	STRUCTURE DESIGN BRANCH 1	ALTERNATIVE 2B
DRAWN BY Bob Huddleston	DATE 1/26/09		PLANNING STUDY
CHECKED BY Kevin Harper	DATE 2/4/09		ALBION RIVER BR (REPLACE)
APPROVED Jeff Sims	DATE 2/4/09		BRIDGE NO. 10-136 / CU 01
			SCALE: AS SHOWN / EA 40110K

USERNAME => jzhou DATE PLOTTED => 23-APR-2009 TIME PLOTTED => 10:09

STRUCTURES DESIGN ADVANCE PLANNING STUDY SHEET (ENGLISH) (REV. 10/25/05)

FILE => albion_river_aps2b.dgn

STATE OF CALIFORNIA - DEPARTMENT OF TRANSPORTATION - DIVISION OF STRUCTURES

DIST.	COUNTY	ROUTE	POST MILE
01	MEN	1	43.74

To get to the Caltrans web site, go to: http://www.dot.ca.gov

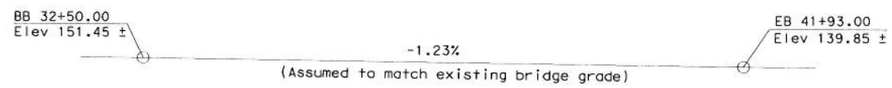

PROFILE GRADE

NO SCALE

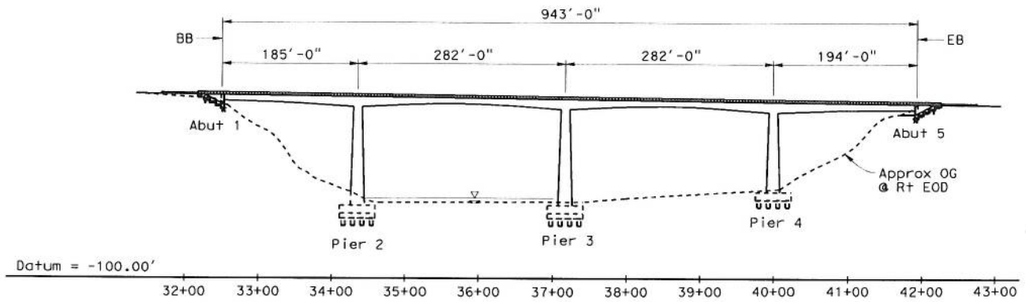

DEVELOPED ELEVATION

1" = 200'

Notes:

1. 24" CIDH Piles (45 ton) assumed @ Abutments
2. 5'-0" CISS concrete piles (1800 ton) assumed @ Piers
3. Traveled way deck drainage carried through Abutment 5. Sidewalk drainage utilizes scuppers and drop-through Drains.
4. Seal Course concrete and Type A Excavation assumed @ Piers 2 & 3
5. Type D Excavation assumed @ Pier 4

Legend:

Indicates Existing Structure

Indicates Deck Drain Type D-3 (traveled way drainage system)

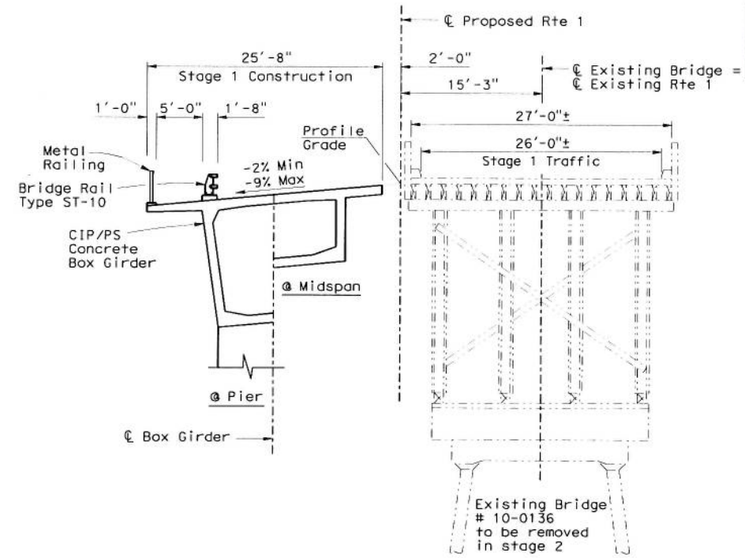

STAGE 1

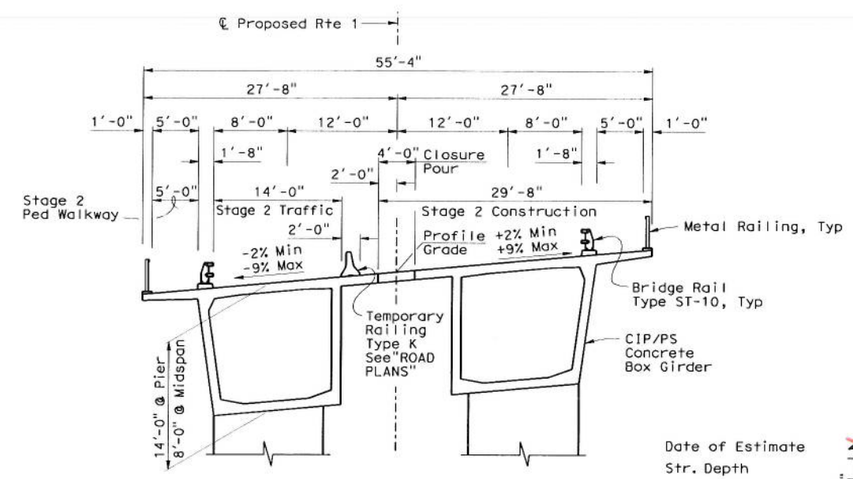

STAGE 2

TYPICAL SECTION

1/16" = 1'-0"

Date of Estimate	~~4-27-09~~ 5-17-13
Str. Depth	Varies
Length	943.00 ft
Width	55'-4"
Area	52,179 ft²
Cost/sq ft including	~~$ 676/sq ft~~
10% Mobilization &	~~$ 774/sq ft~~
25% Contingency	
Total Cost	~~$ 40,371,700~~ $ 35,272,000

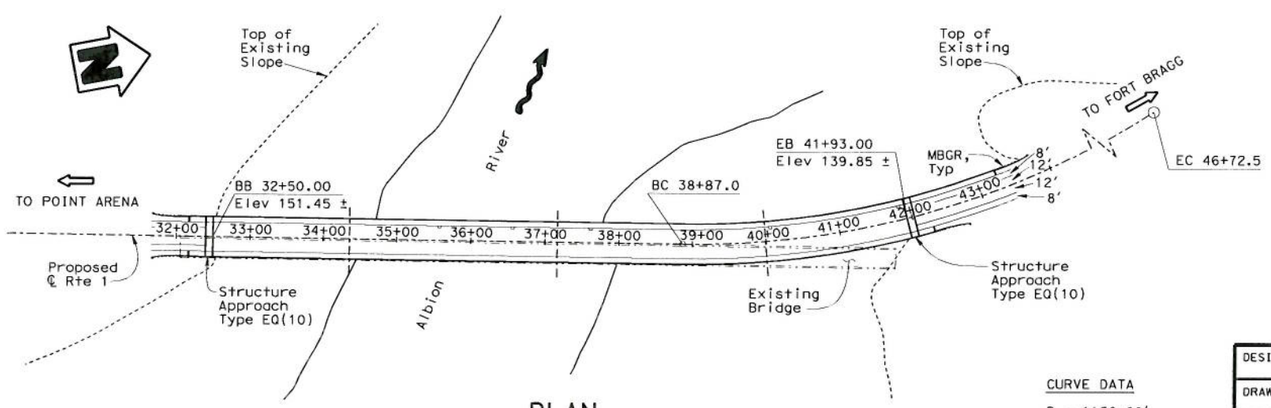

PLAN

1" = 200'

CURVE DATA

R = 1150.00'
Δ = 39°08'08"
L = 786.74'

DESIGNED BY Kevin Harper	DATE 03/10/09	STRUCTURE DESIGN BRANCH 1	ALTERNATIVE 3A
DRAWN BY Jie Tang	DATE 03/10/09		PLANNING STUDY
CHECKED BY	DATE		ALBION RIVER BR (REPLACE)
APPROVED Jeff Sims	DATE		BRIDGE NO. 10-136 / CU 01
			SCALE: AS SHOWN / EA 40110K

USERNAME => jzhou DATE PLOTTED => 23-APR-2009 TIME PLOTTED => 10:09

STRUCTURES DESIGN ADVANCE PLANNING STUDY SHEET (ENGLISH) (REV. 10/25/05)

FILE => albion_river_aps3a.dgn

STATE OF CALIFORNIA - DEPARTMENT OF TRANSPORTATION - DIVISION OF STRUCTURES

DIST.	COUNTY	ROUTE	POST MILE
01	MEN	1	43.74

To get to the Caltrans web site, go to: http://www.dot.ca.gov

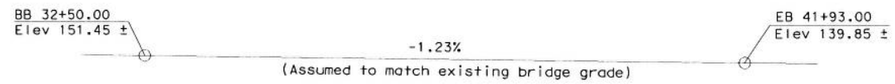

PROFILE GRADE

NO SCALE

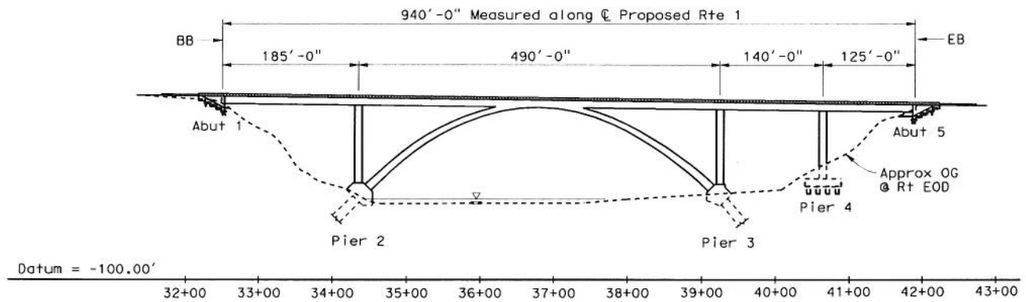

DEVELOPED ELEVATION

1" = 200'

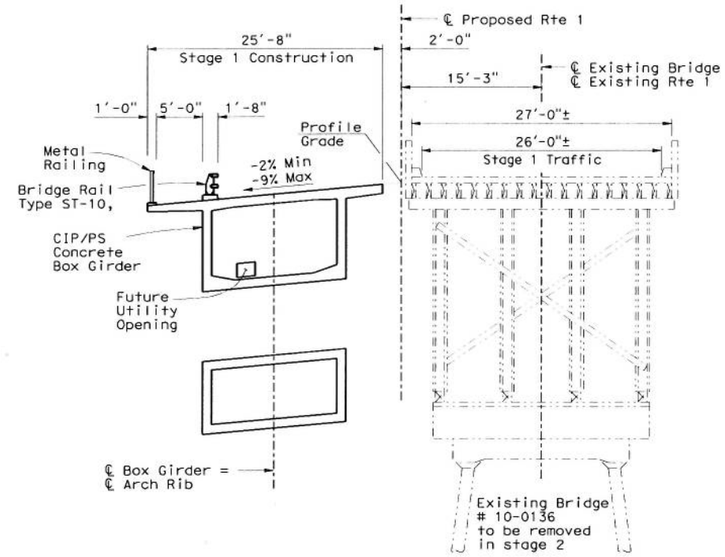

STAGE 1

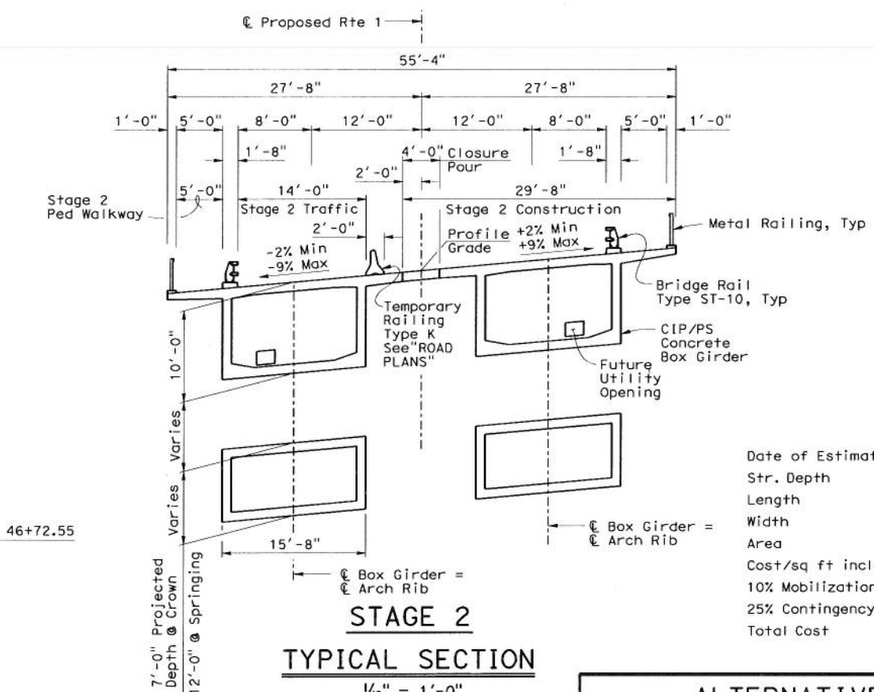

STAGE 2

TYPICAL SECTION

1/16" = 1'-0"

Notes:

1. 24" CIDH Piles (45 ton) assumed @ Abutments
2. 5'-0" CISS concrete piles (1800 ton) assumed @ Pier 4
3. 13'-0" X 17'-0" X 80' deep mined shafts assumed @ arch Rib foundation (Pier 2 & 3)
4. Rock voids and fracture density assumed to be low enough that ground water can be controlled at the arch mined shaft foundations.
5. Type D Excavation assumed @ Pier 4
6. Traveled way deck drainage carried through Abutment 5. Sidewalk drainage utilizes scuppers and drop-through Drains.

Legend:

- Indicates Existing Structure
- Indicates Deck Drain Type D-3 (traveled way drainage system)

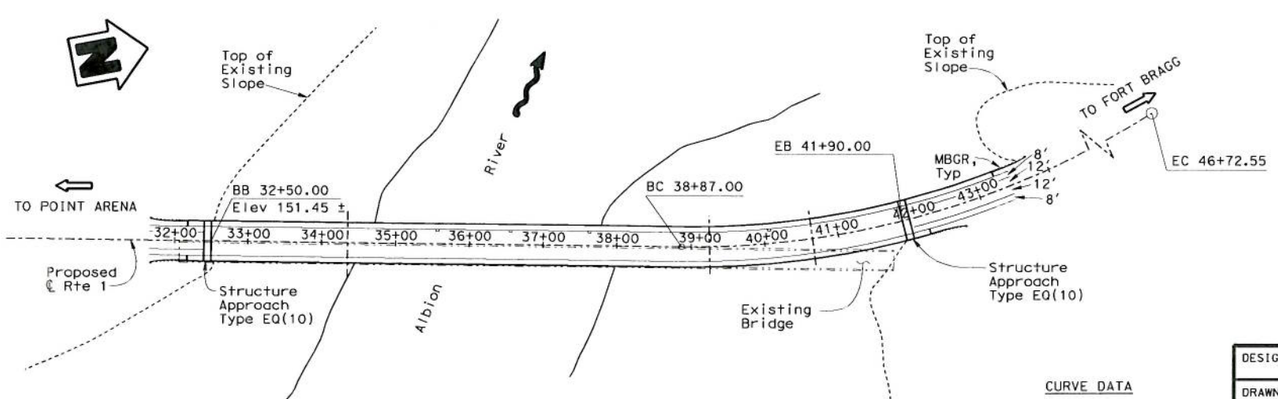

PLAN

1" = 200'

CURVE DATA

R = 1150.00'
Δ = 39°08'08"
L = 786.74'

Date of Estimate	5-17-13 ~~4-27-09~~
Str. Depth	Varies
Length	940.00 ft
Width	55'-4"
Area	52,013 ft²
Cost/sq ft including 10% Mobilization & 25% Contingency	$855/d ~~$905/sq ft~~
Total Cost	~~$47,055,700~~ $44,474,000

DESIGNED BY	Kevin Harper	DATE	03/17/09
DRAWN BY	Jie Tang	DATE	03/17/09
CHECKED BY		DATE	
APPROVED	Jeff Sims	DATE	

STRUCTURE DESIGN BRANCH 1

ALTERNATIVE 3B

PLANNING STUDY

ALBION RIVER BR (REPLACE)

BRIDGE NO. 10-136	CU 01
SCALE: AS SHOWN	EA 40110K

USERNAME => jzhou DATE PLOTTED => 23-APR-2009 TIME PLOTTED => 10:09

STRUCTURES DESIGN ADVANCE PLANNING STUDY SHEET (ENGLISH) (REV. 10/25/05)

FILE => albion_river_aps3b.dgn