01-LAK-29
PM 23.6/31.6
01-2981U0
01 0000 0090

Use bookmarks to navigate

ATTACHMENT A
PROJECT LOCATION MAP

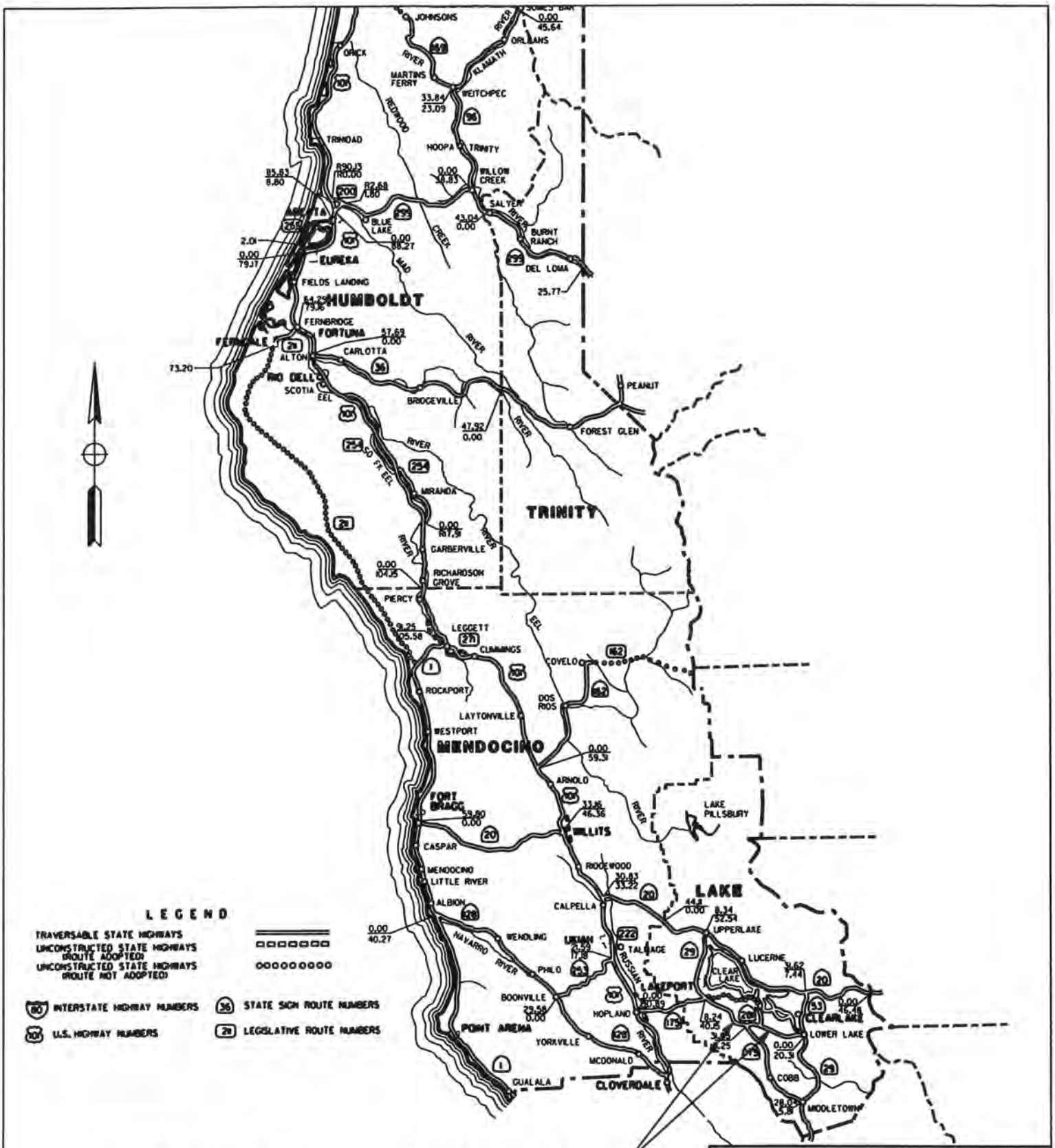

STATE OF CALIFORNIA
DEPARTMENT OF TRANSPORTATION

DISTRICT 1

LOCATION MAP

LAKE 29 EXPRESSWAY
DRAFT PROJECT REPORT
01-LAK-29: KP 37.9/50.9 (PM 23.6/31.6)
EA: 01-2981U

Attachment A
Sheet 1 of 2

distmap1.dgn 5/11/2007 3:02:57 PM

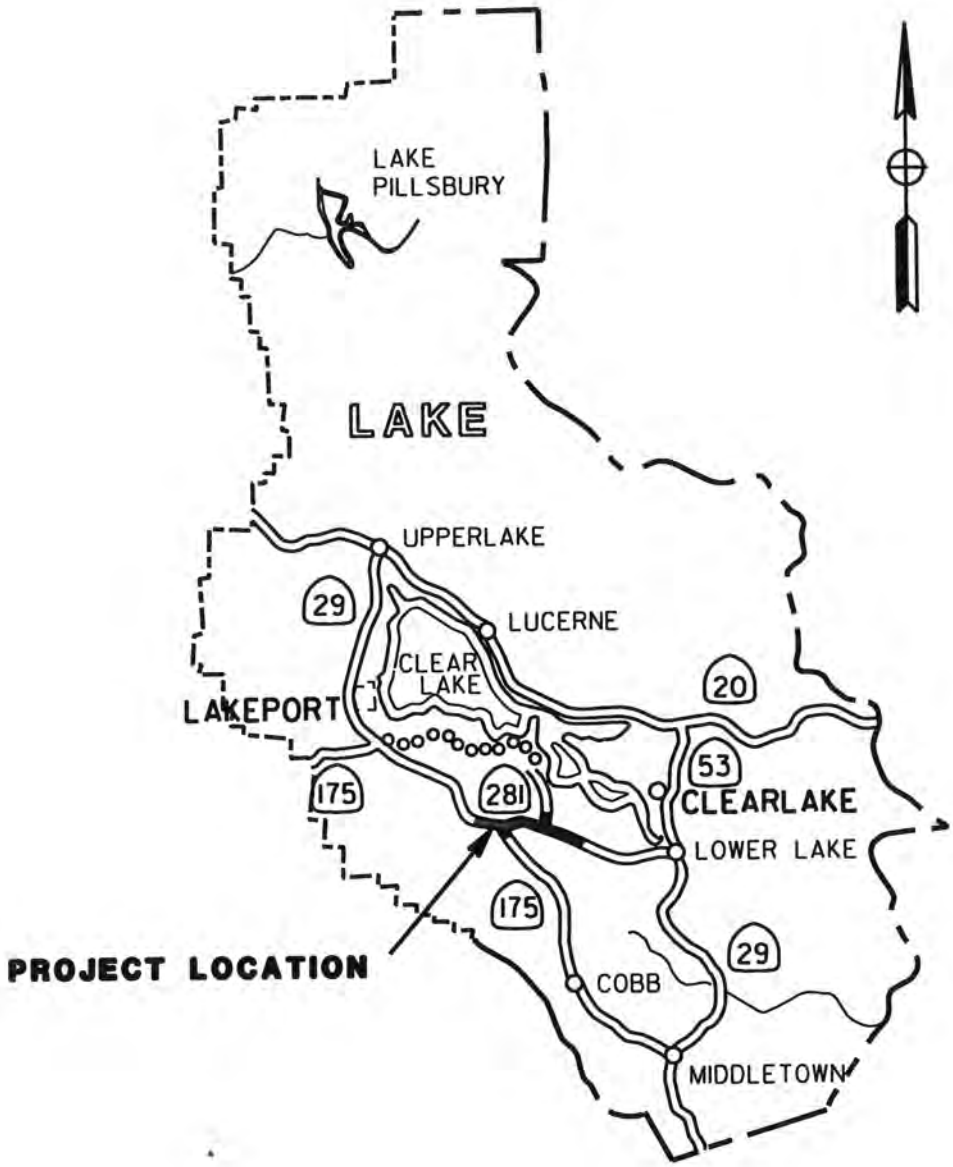

LOCATION MAP

LAKE 29 EXPRESSWAY
DRAFT PROJECT REPORT
01-LAK-29: KP 37.9/50.9 (PM 23.6/31.6)
EA: 01-2981U

NO SCALE

Attachment
A
Sheet 2 of 2

070511 locationMap.dgn 5/11/2007 2:25:45 PM

ATTACHMENT B
PROJECT ALTERNATIVES MAP

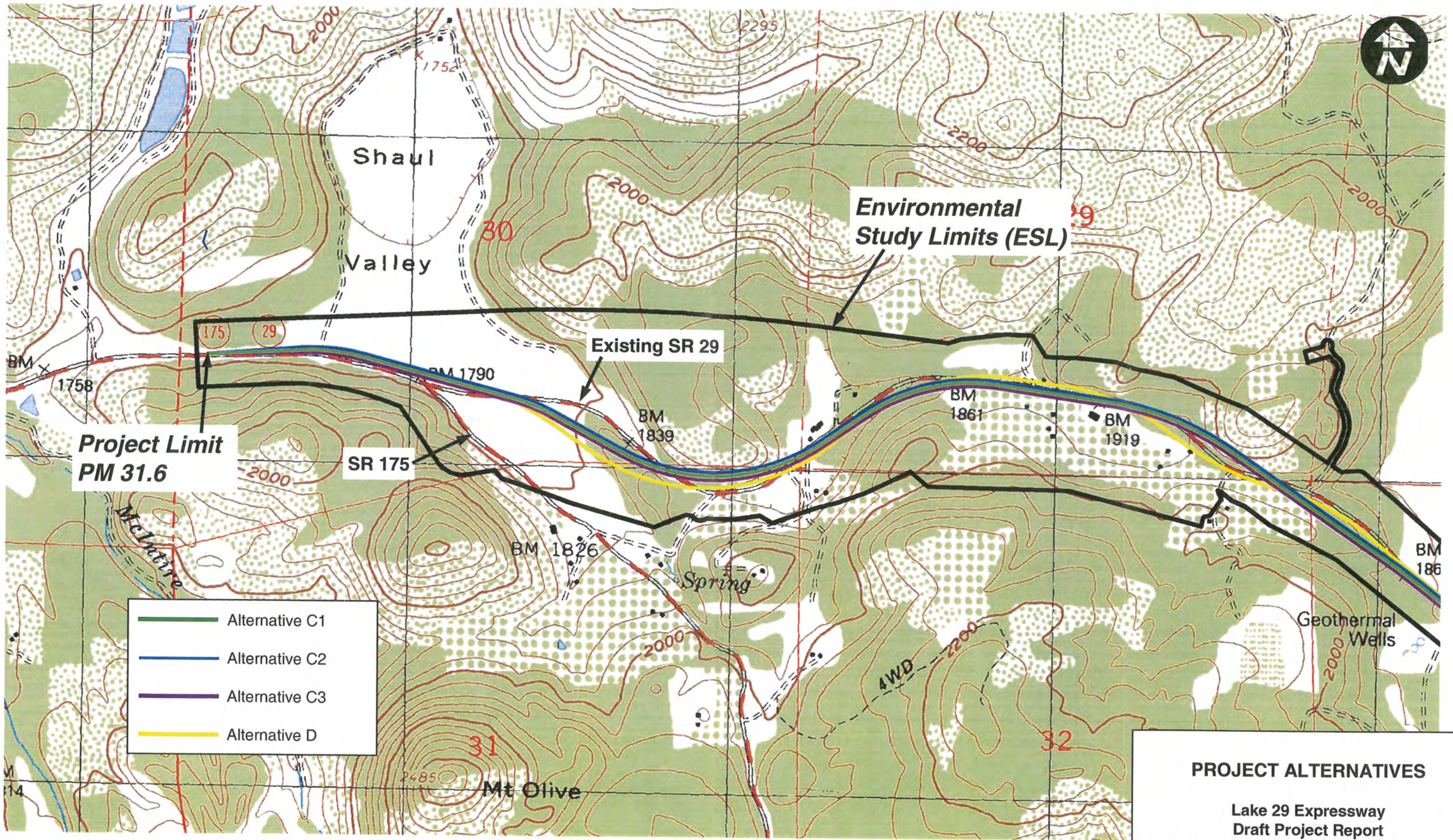

Source: USGS 7 1/2 minute topographic quadrangle: Kelseyville and Clearlake Highlands, CA.

PROJECT ALTERNATIVES

Lake 29 Expressway
Draft Project Report
01-LAK-29: KP 37.9/50.9 (PM 23.6/31.6)
EA 01-2981U

ATTACHMENT B
Sheet 1 of 3

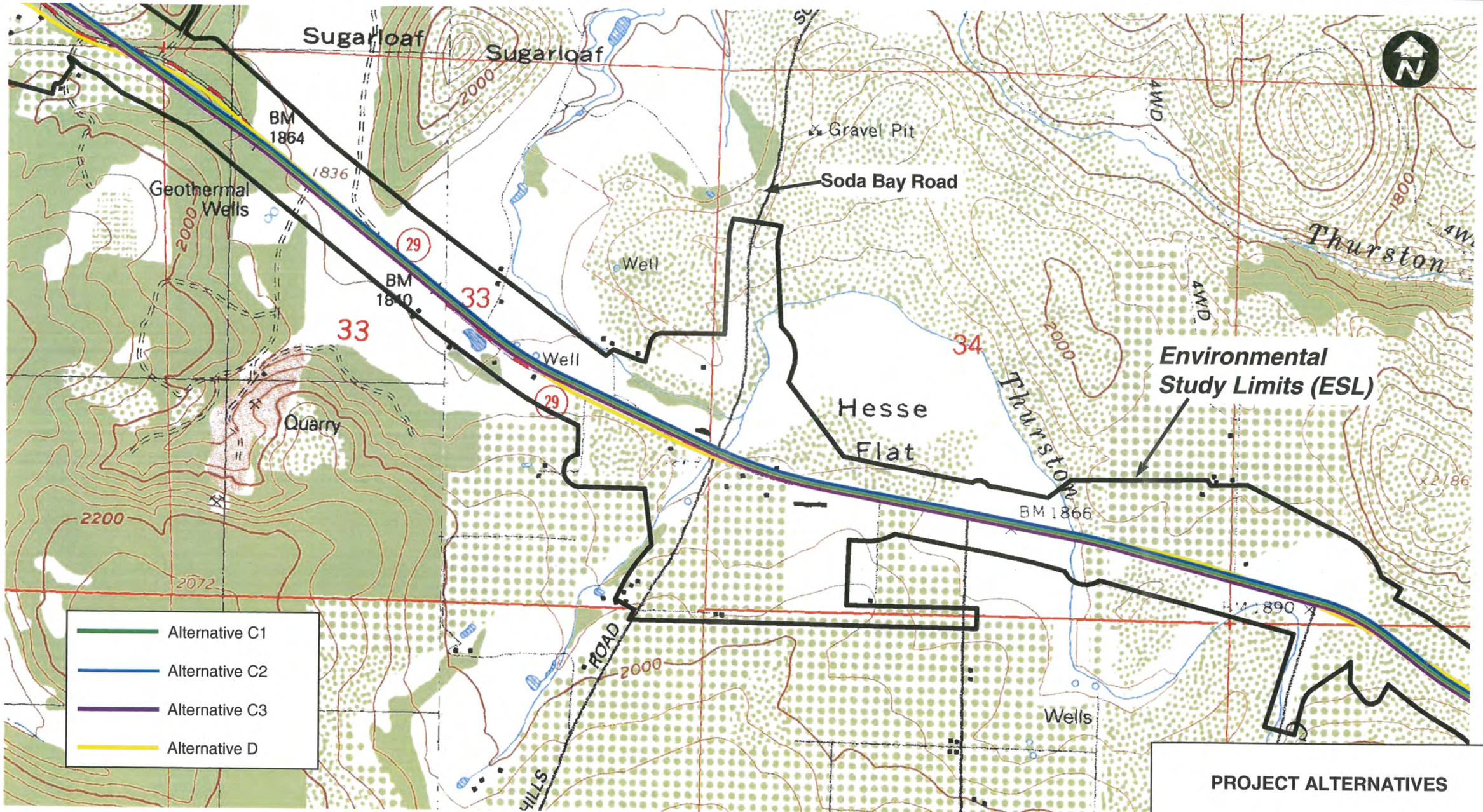

Source: USGS 7 1/2 minute topographic quadrangle: Kelseyville and Clearlake Highlands, CA.

0 500 1,000 2,000 3,000 4,000 Feet

PROJECT ALTERNATIVES

Lake 29 Expressway
Draft Project Report
01-LAK-29: KP 37.9/50.9 (PM 23.6/31.6)
EA 01-2981U

ATTACHMENT B
Sheet 2 of 3

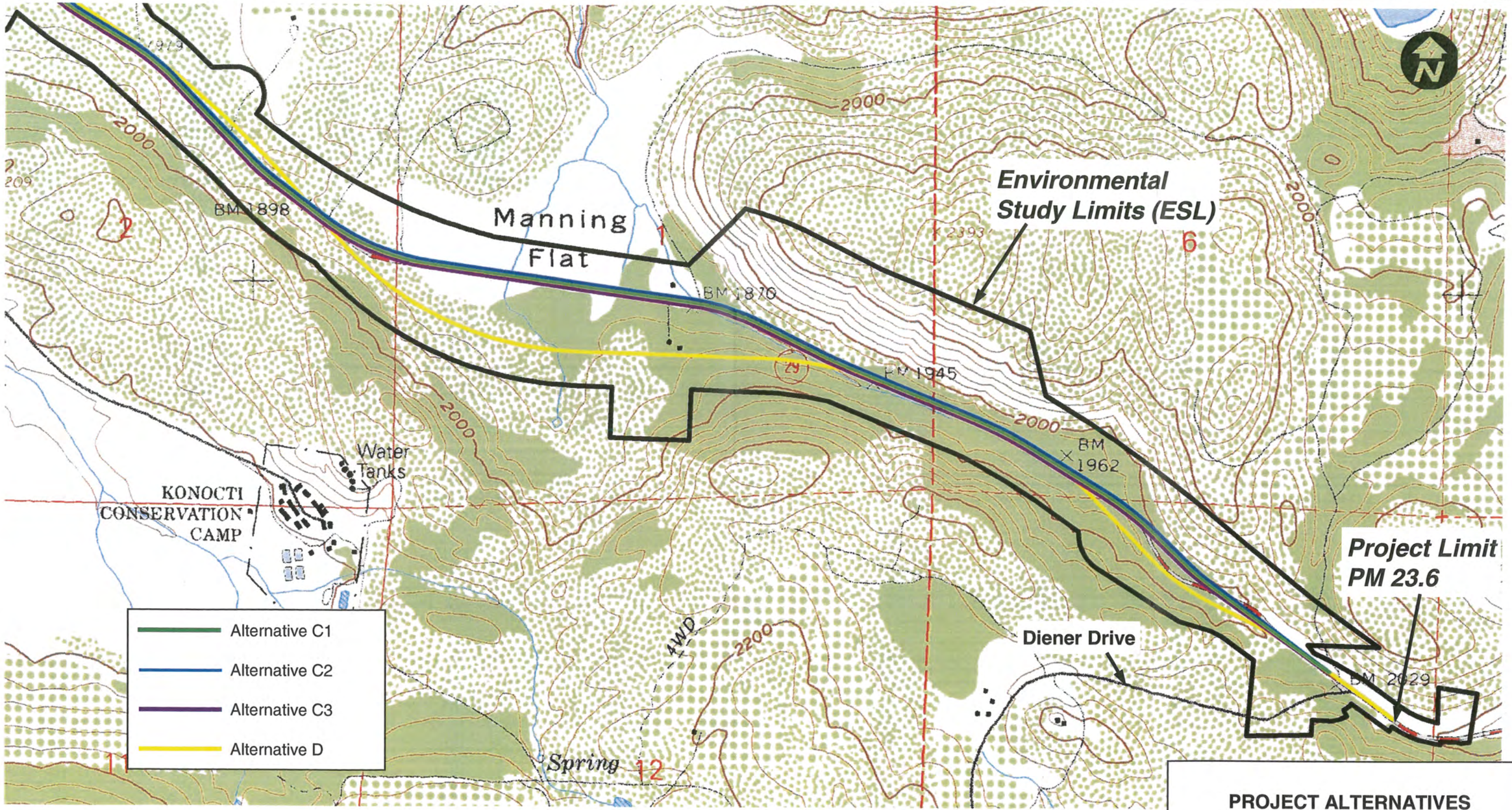

Source: USGS 7 1/2 minute topographic quadrangle: Kelseyville and Clearlake Highlands, CA.

0 500 1,000 2,000 3,000 4,000 Feet

PROJECT ALTERNATIVES

Lake 29 Expressway
Draft Project Report
01-LAK-29: KP 37.9/50.9 (PM 23.6/31.6)
EA 01-2981U

ATTACHMENT B
Sheet 3 of 3

ATTACHMENT C
TYPICAL CROSS SECTIONS

Caltrans Metric

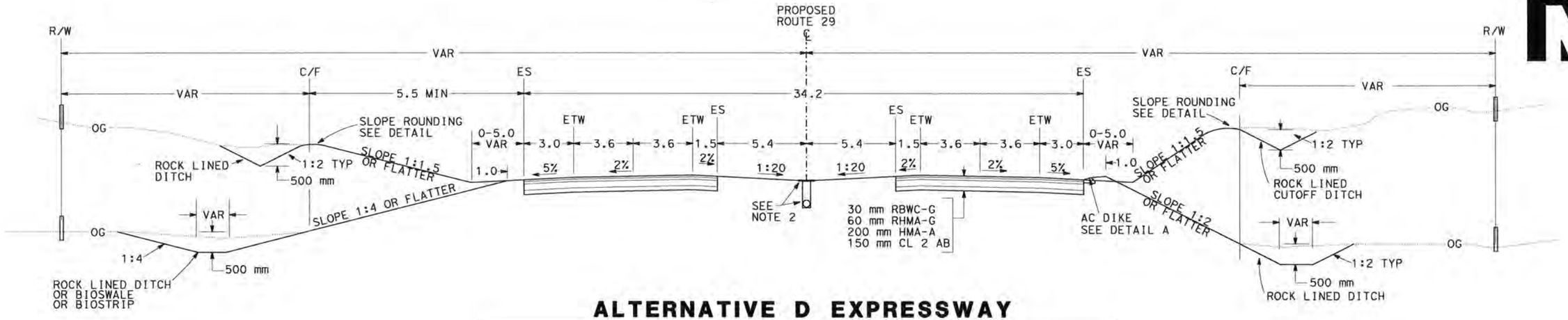

ALTERNATIVE D EXPRESSWAY

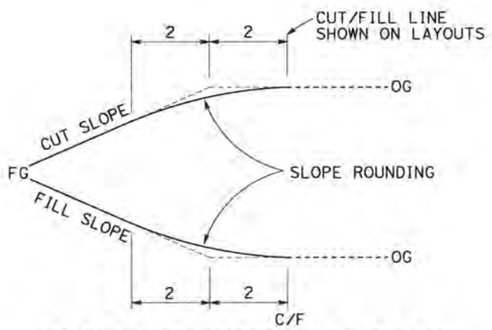

SLOPE ROUNDING DETAIL

(TYPICAL)

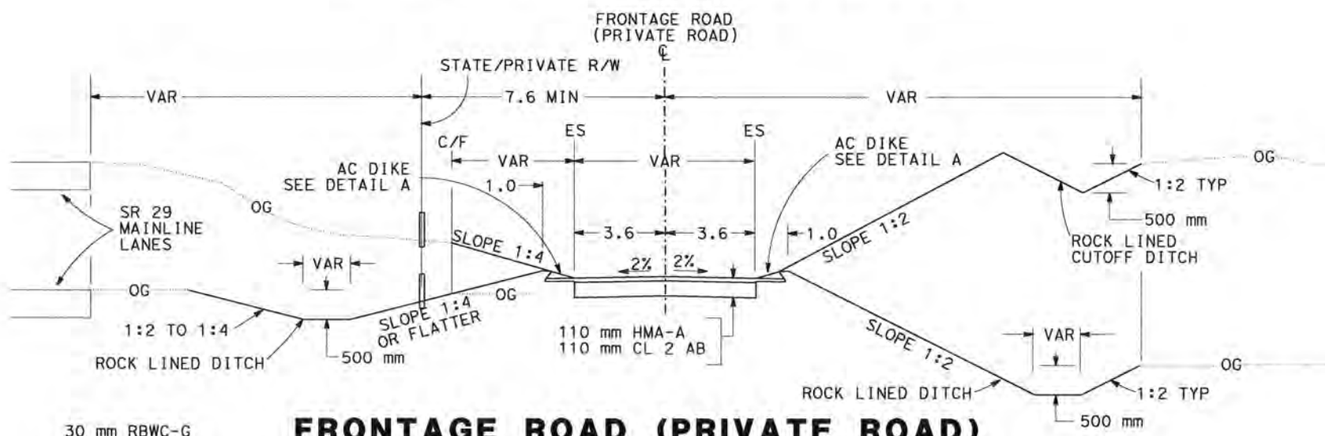

FRONTAGE ROAD (PRIVATE ROAD)

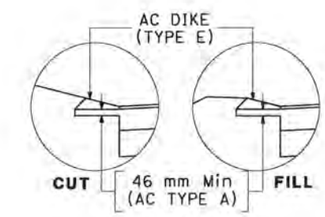

DETAIL A

(TYPICAL)

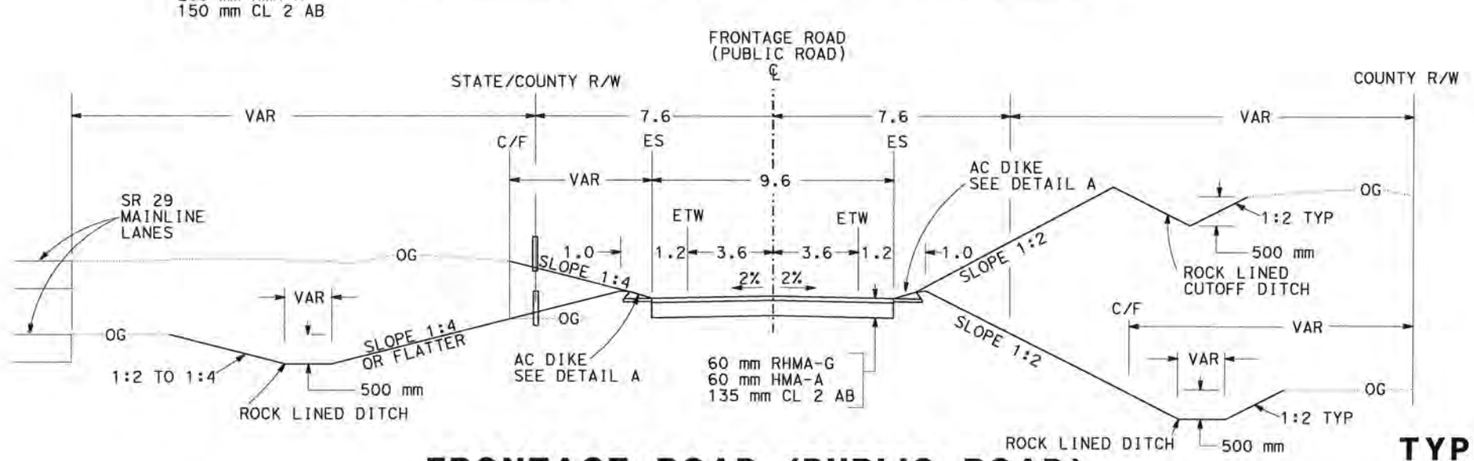

FRONTAGE ROAD (PUBLIC ROAD)

NOTES:

1. EMBANKMENT SLOPES OF 1:2 WILL BE USED IN LIEU OF 1:4 SLOPES WHEN IT IS NECESSARY TO AVOID ENVIRONMENTAL RESOURCES, PROPERTY IMPROVEMENTS OR OTHER SIGNIFICANT IMPACTS.
2. ALTERNATIVE D PROPOSES A STORM DRAIN IN THE MEDIAN.

TYPICAL CROSS SECTIONS
LAK 29 EXPRESSWAY
EA 2981U0

ALL DIMENSIONS ARE IN METERS UNLESS OTHERWISE SHOWN

Caltrans Metric

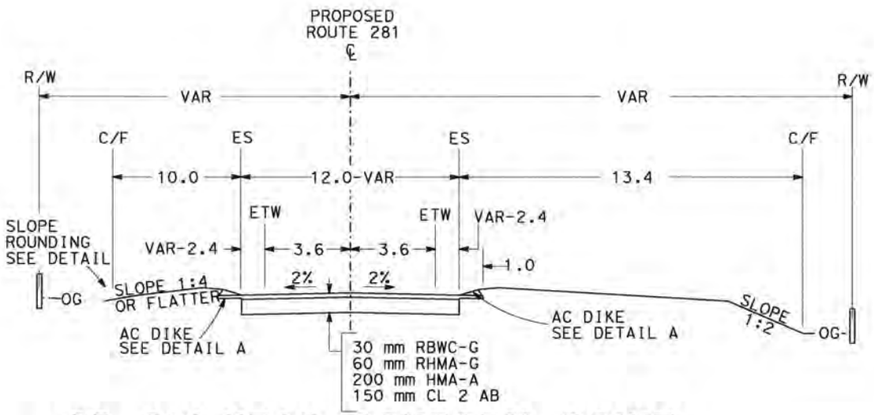

SR 281 NEAR CONFORM POINT

(Looking towards Clear Lake)

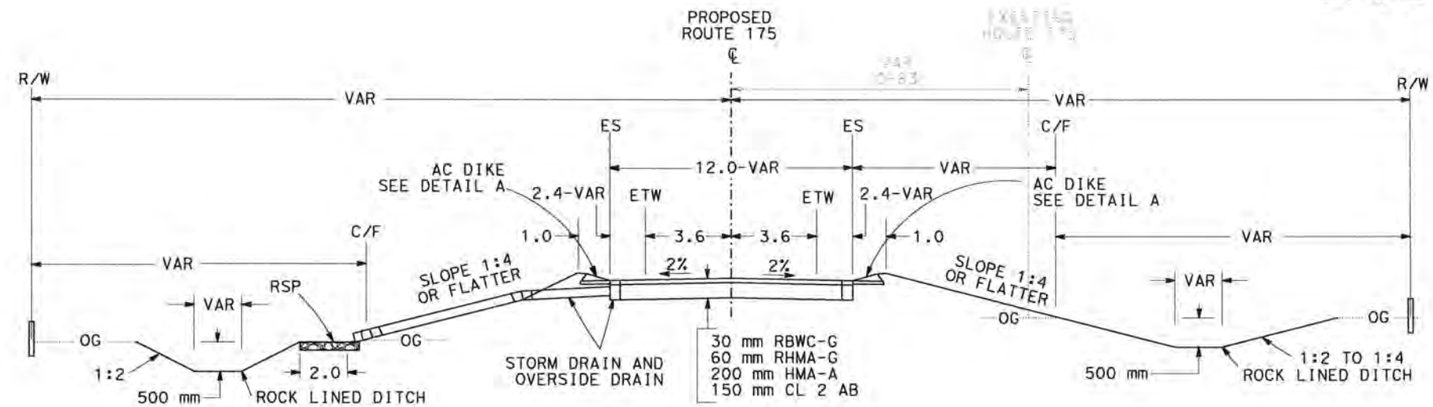

SR175

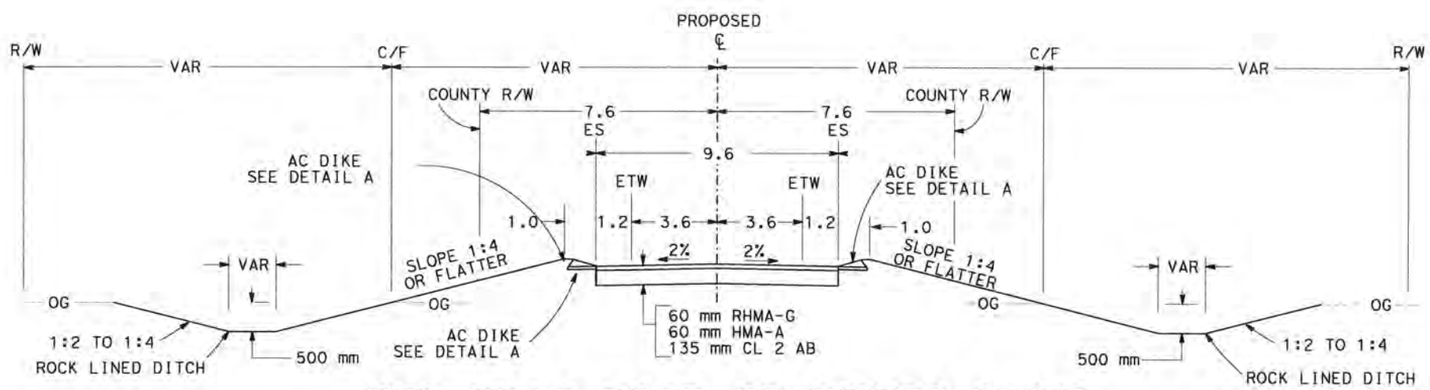

RED HILLS ROAD OR DIENER DRIVE NEAR CONFORM POINT

(SEE NOTE 2)

ALL DIMENSIONS ARE IN METERS UNLESS OTHERWISE SHOWN

NOTES:

1. SIDE SLOPES OF 1:2 WILL BE USED IN LIEU OF 1:4 SLOPES WHEN IT IS NECESSARY TO AVOID ENVIRONMENTAL RESOURCES, PROPERTY IMPROVEMENTS OR OTHER SIGNIFICANT IMPACTS.
2. THE DIENER DRIVE TYPICAL CROSS-SECTION ONLY APPLIES TO ALTERNATIVE D.

TYPICAL CROSS SECTIONS
LAK 29 EXPRESSWAY
EA 2981U0

ATTACHMENT D
LAYOUT OF ALIGNMENTS

LEGEND
Lanes
Fill Lines
Cut Lines
State Right of Way Limits
County Right of Way Limits
Assessor Parcel Boundary
Environmental Study Limits
To Lower Lake
Diener Drive
PM 7.64.056
PM 7.80.555
PM 10.06
ALTERNATIVE D
LAKE 29 IMPROVEMENT PROJECT
01-LAK-29: KP 37.9/50.9 (PM 23.6/31.6)
EA: 01-2981U
Meters
0 50 100 200
Feet
0 150 300 600
Attachment
D-4
Sheet 1 of 7

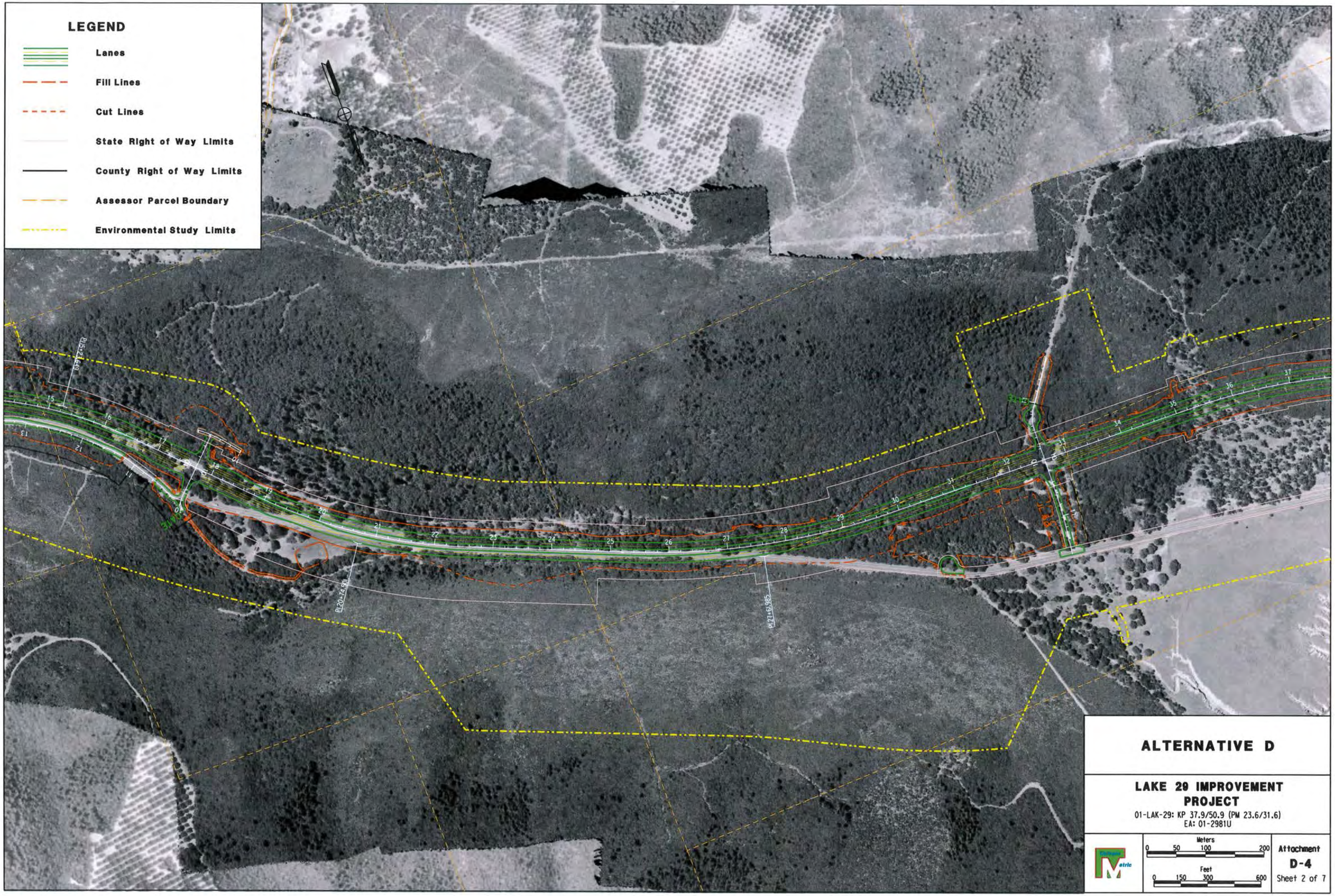

ALTERNATIVE D

LAKE 29 IMPROVEMENT PROJECT

01-LAK-29: KP 37.9/50.9 (PM 23.6/31.6)
EA: 01-2981U

Meters: 0 50 100 200
Feet: 0 150 300 600

Attachment
D-4
Sheet 2 of 7

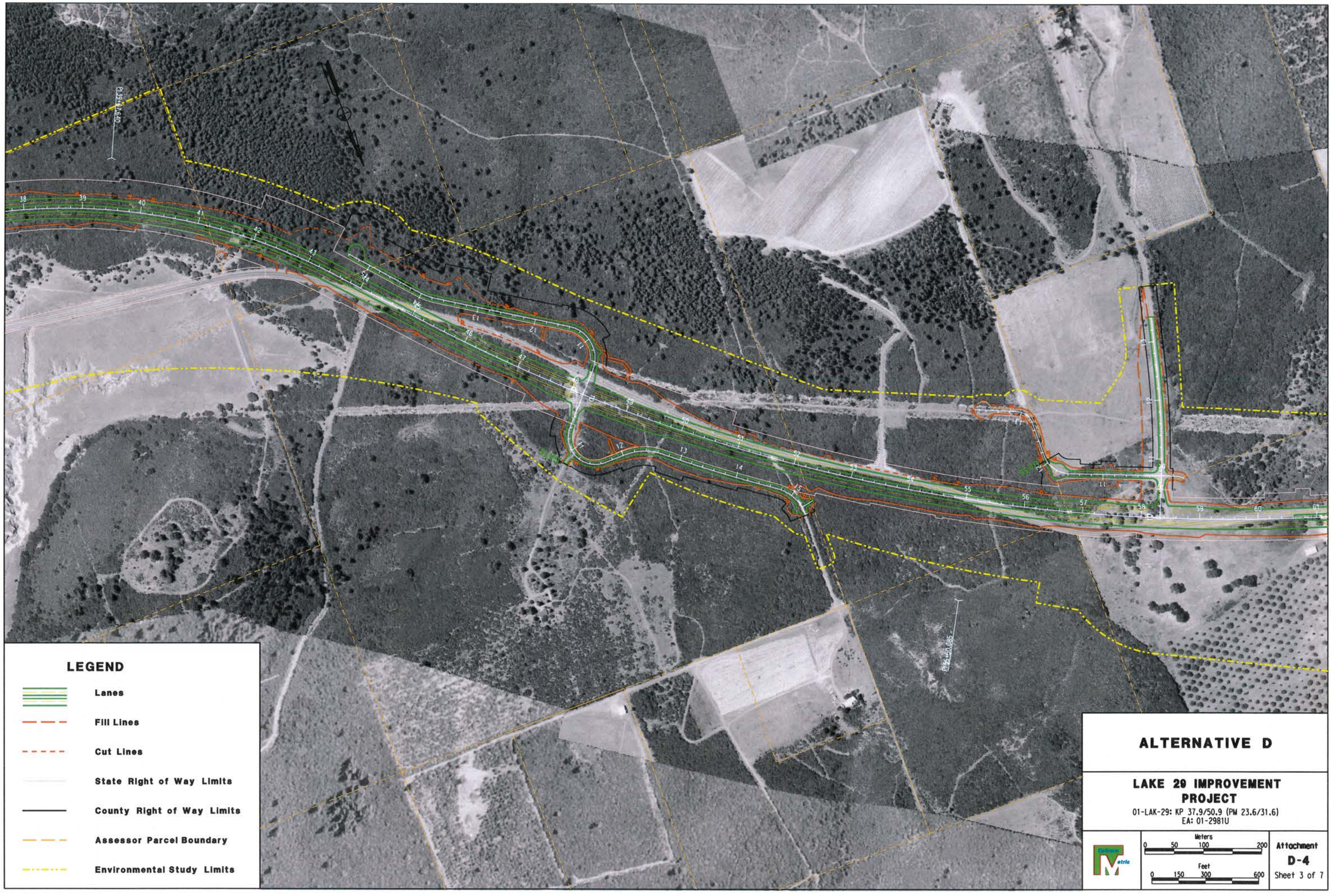
LEGEND
Lanes
Fill Lines
Cut Lines
State Right of Way Limits
County Right of Way Limits
Assessor Parcel Boundary
Environmental Study Limits
ALTERNATIVE D
LAKE 29 IMPROVEMENT PROJECT
01-LAK-29: KP 37.9/50.9 (PM 23.6/31.6)
EA: 01-2981U
Meters
0 50 100 200
Feet
0 150 300 600
Attachment
D-4
Sheet 3 of 7

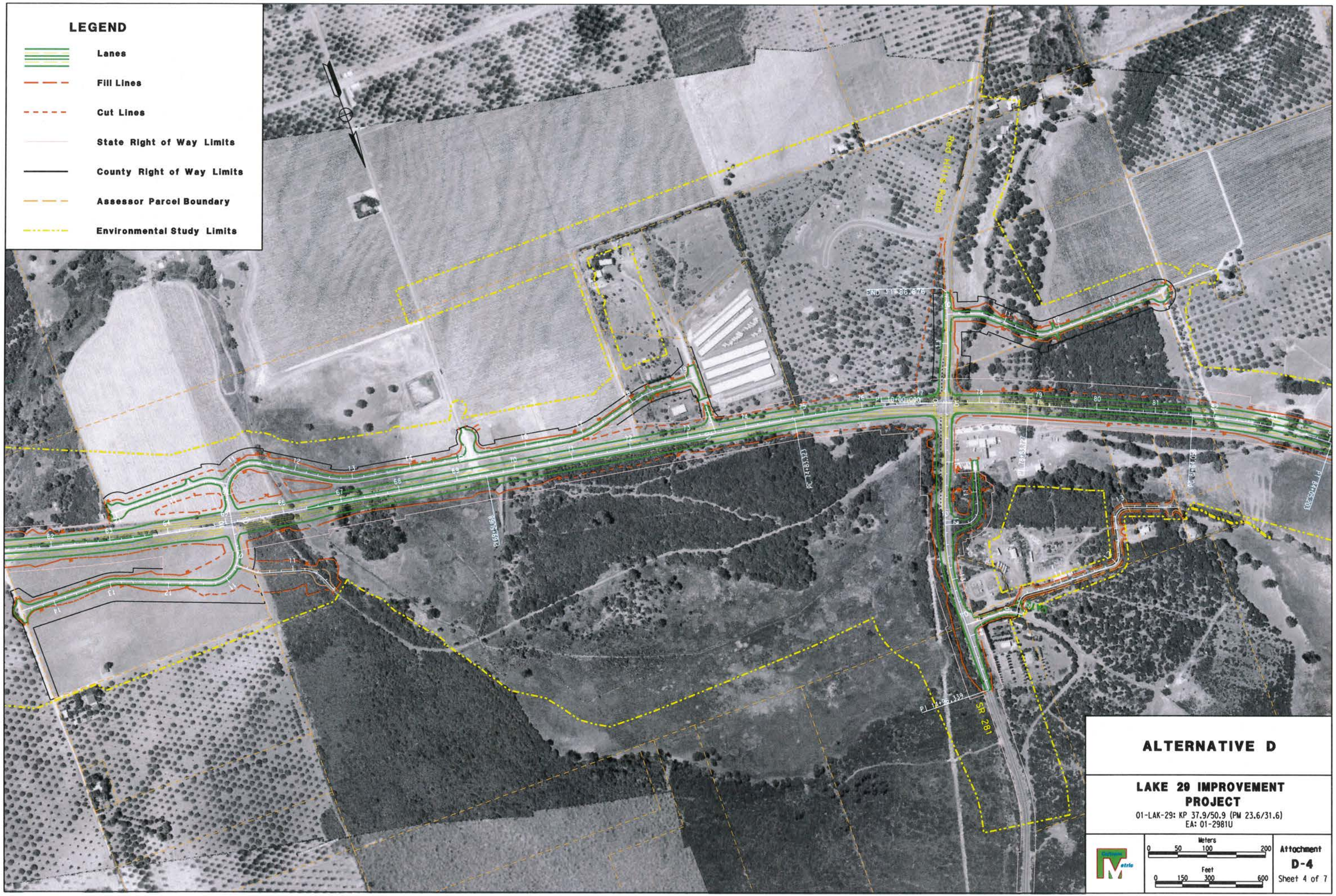
LEGEND
Lanes
Fill Lines
Cut Lines
State Right of Way Limits
County Right of Way Limits
Assessor Parcel Boundary
Environmental Study Limits
SR 281
ALTERNATIVE D
LAKE 29 IMPROVEMENT PROJECT
01-LAK-29: KP 37.9/50.9 (PM 23.6/31.6)
EA: 01-2981U
Meters
0 50 100 200
Feet
0 150 300 600
Attachment
D-4
Sheet 4 of 7

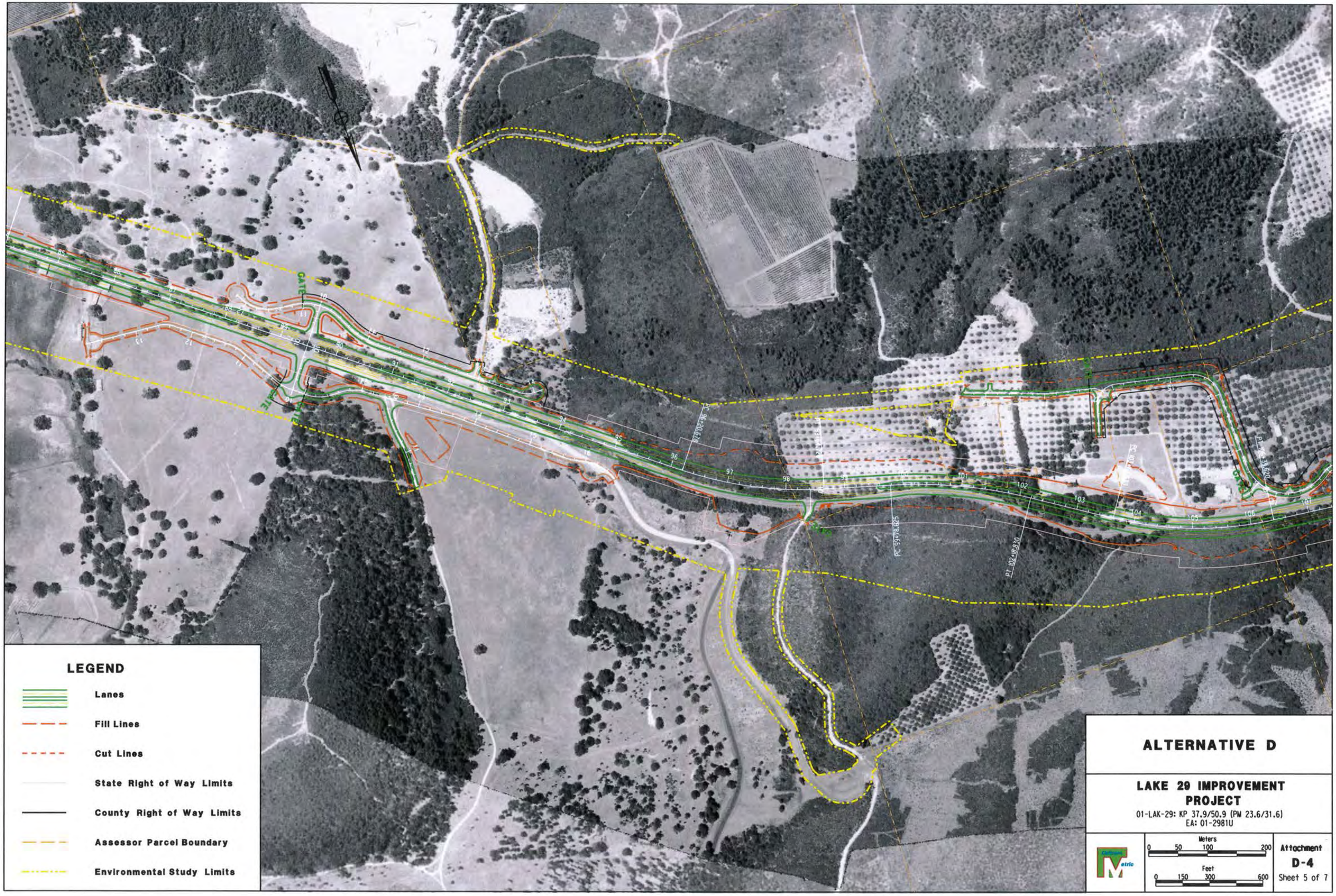
LEGEND
Lanes
Fill Lines
Cut Lines
State Right of Way Limits
County Right of Way Limits
Assessor Parcel Boundary
Environmental Study Limits
ALTERNATIVE D
LAKE 29 IMPROVEMENT PROJECT
01-LAK-29: KP 37.9/50.9 (PM 23.6/31.6)
EA: 01-2981U
Meters
0 50 100 200
Feet
0 150 300 600
Attachment
D-4
Sheet 5 of 7

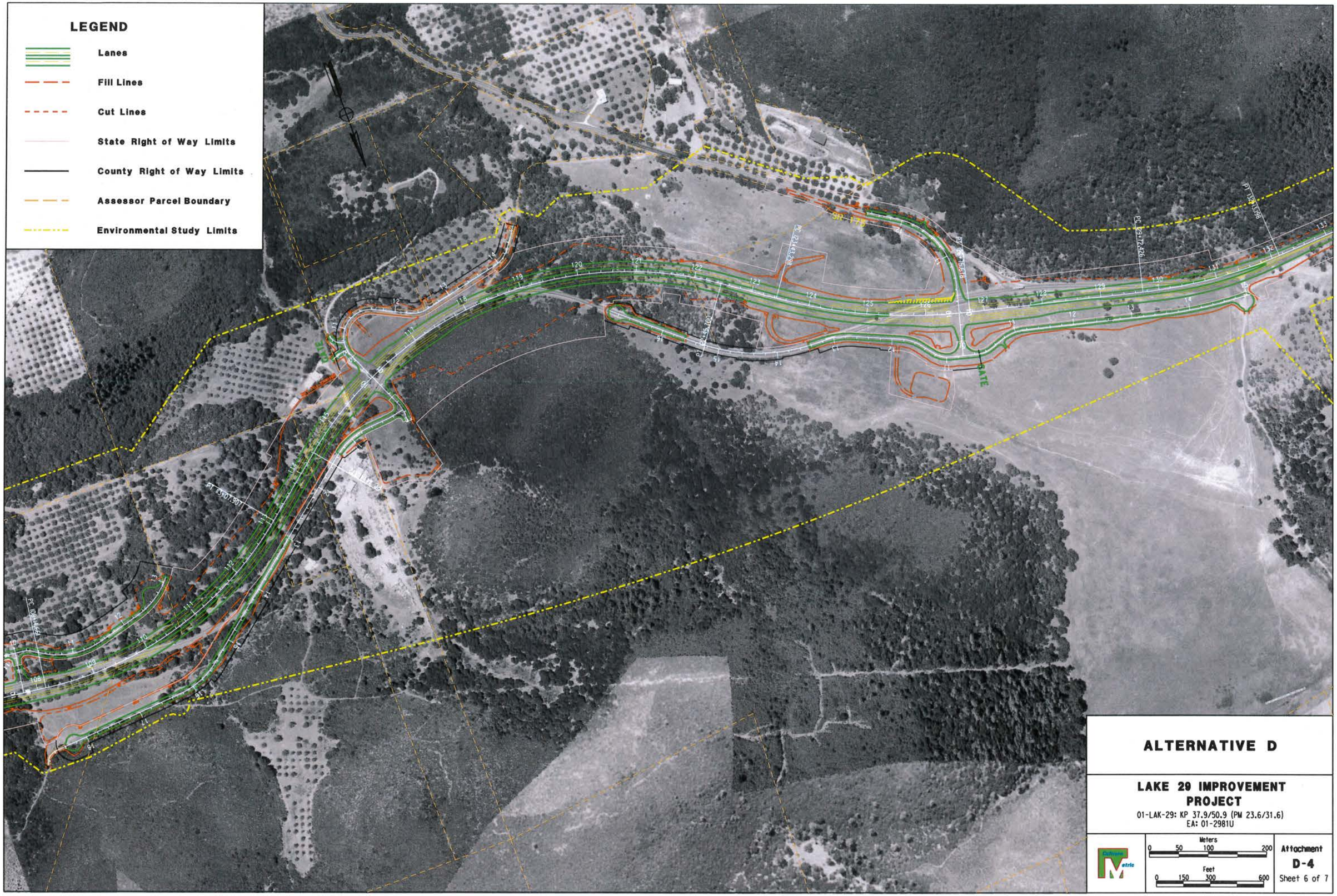

ALTERNATIVE D

LAKE 29 IMPROVEMENT PROJECT

01-LAK-29: KP 37.9/50.9 (PM 23.6/31.6)
EA: 01-2981U

Meters: 0 50 100 200
Feet: 0 150 300 600

Attachment
D-4
Sheet 6 of 7

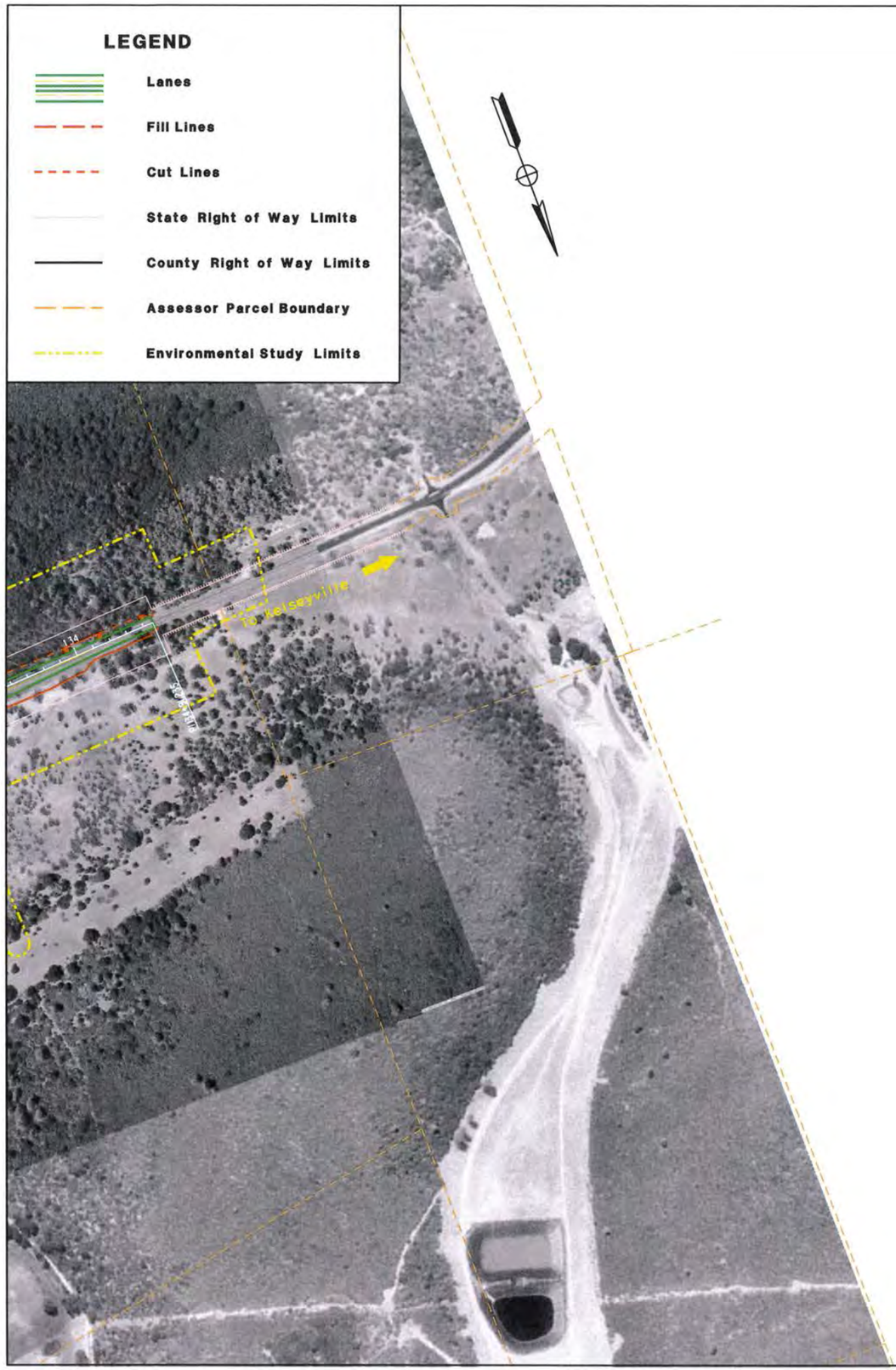

ALTERNATIVE D

LAKE 29 IMPROVEMENT PROJECT

01-LAK-29: KP 37.9/50.9 (PM 23.6/31.6)
EA: 01-2981U

Meters: 0 50 100 200
Feet: 0 150 300 600

Attachment
D-4
Sheet 7 of 7

ATTACHMENT E

FINAL ENVIRONMENTAL DOCUMENT

(ATTACHED AS SEPARATE DOCUMENT)

01-LAK-29
PM 23.6/31.6
01-2981U0
01 0000 0090

ATTACHMENT F
STRUCTURES ADVANCED PLANNING STUDY

State of California **Business, Transportation and Housing Agency**

M e m o r a n d u m

To : MR JUAN REYES
Transportation Engineer
North Region Design – E1

Date: April 6, 2015

File No. 01-Lak-29-KP 37.9/50.9
(PM 23.6/31.6)
EA 01-2981U0
Lake 29 Expressway
Earth Retaining System

From : Jose Higareda
Branch Chief (Acting)
Bridge Design Branch 15
Structural Design
Division of Engineering Services

Subject : Structure APS Cost Estimate

This Advance Planning Study (APS) provides the estimate for the construction of an earth retaining system to protect a possible historic archeological site along the proposed realigned and widened Lake 29 Expressway in Lake County.

Alternative 1 – Soil Nail Wall

The probabilistic estimated construction cost, including 10% time related, 10% mobilization, and 25% contingencies is $1,649,273 with a recommendation from DES SOE for the work to be programmed at $1,750,000 based on 80% Forecast Value.

Alternative 2 – Ground Anchor Wall

The probabilistic estimated construction cost, including 10% time related, 10% mobilization, and 25% contingencies is $1,278,323 with a recommendation from DES SOE for the work to be programmed at $1,312,000 based on 80% Forecast Value.

Please see attachments for General Plans and estimate calculations.

In preparing the APS and associated project costs, the following assumptions were made:

- The soils at this site are assumed to be non-corrosive.
- No subsurface exploration was performed. Site subsurface material conditions were estimated based on the As-Built LOTBs for Seigler Creek Bridge (Replace) dated March 21, 1991.
- No groundwater is anticipated at the site.
- Hard drilling is expected during drilling for soil nails or ground anchors.

- The existing utilities are unknown at this time and relocation of the existing utilities was not considered in the preparation of this study.

If you have any questions or need additional information regarding this study, please contact Hung Po Yang at (916) 203-7625 or Jose Higareda at (916) 227-1953.

Attachments

C: Elias Kurani, Chief of Office of Bridge Design South – 1
John Fujimoto, Technical Liaison Engineer, North Region
Eskinder Taddese, Project Liaison Engineer, North Region
Quincy Wong, Branch, Bridge Architecture & Aesthetics
Traci Menard, Geotechnical Services
Ed Cramer, District PE
Mark Sobota, District DM

STATE OF CALIFORNIA - DEPARTMENT OF TRANSPORTATION - DIVISION OF STRUCTURES

DIST	COUNTY	ROUTE	KILOMETER POST TOTAL PROJECT
XX	XXX	XXX	

Caltrans Metric

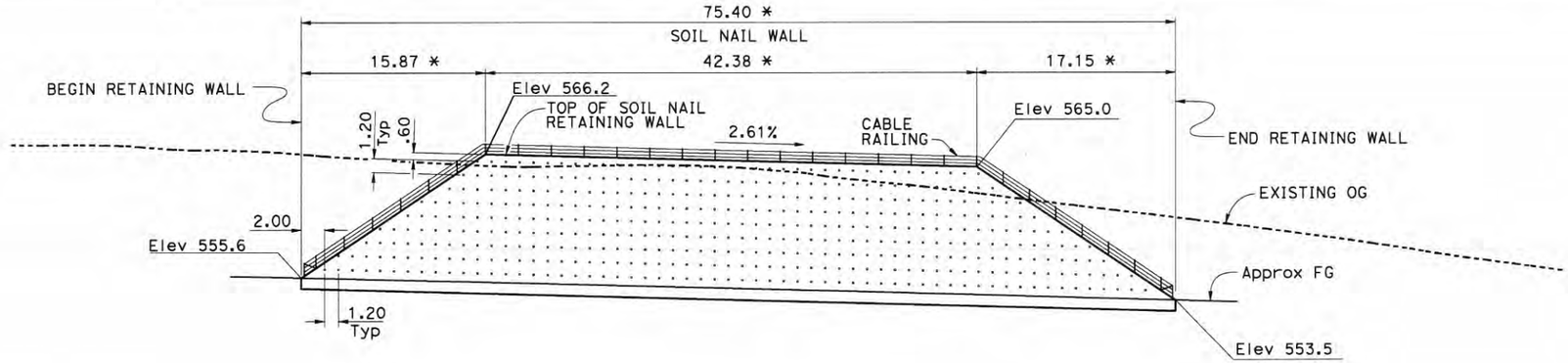

ASSUMPTIONS:
1. Soil Parameters: r = 120 pcf, Φ = 30°, c = 200 psf
2. Soil Nail length = 15 m
3. Horizontal and Vertical Soil Nail spacing = 1.2 m
4. Shotcrete = 0.1 m thick
5. Concrete Facing = 0.19 m thick
6. Site is Corrosive

* - MEASURED ALONG "RW" LINE

DEVELOPED & MIRRORED ELEVATION
1:250

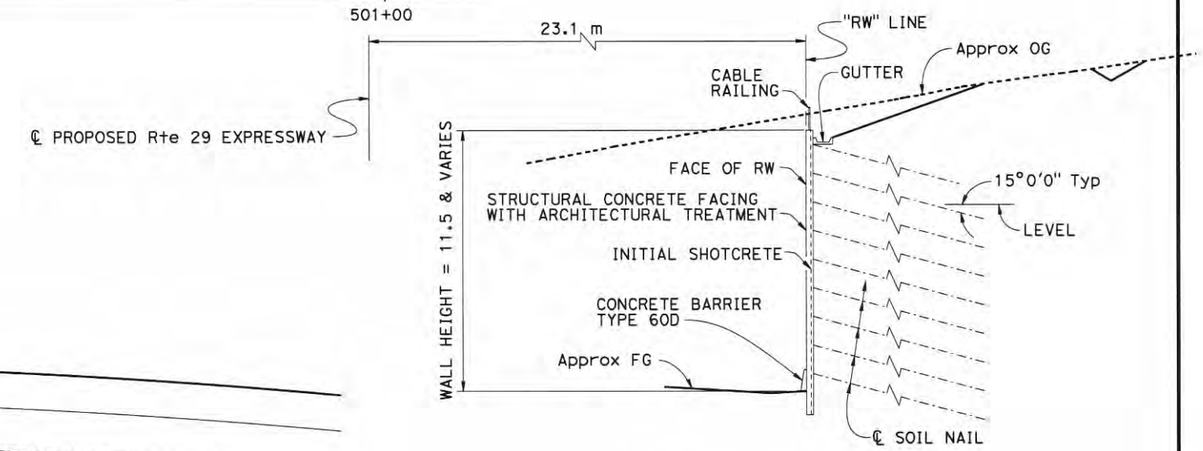

SOIL NAIL TYPICAL SECTION
1:125

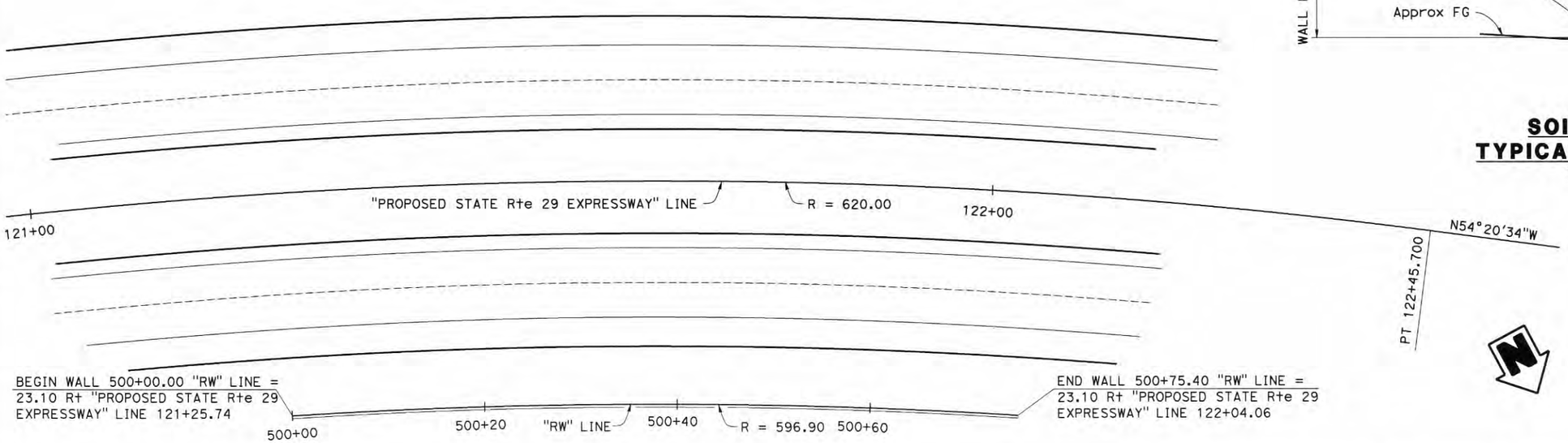

ALL DIMENSIONS ARE IN METERS UNLESS OTHERWISE SHOWN

NOTE:
THE CONTRACTOR MUST VERIFY ALL CONTROLLING FIELD DIMENSIONS BEFORE ORDERING OR FABRICATING ANY MATERIAL.

PLAN
1:250

DESIGNED BY	Paul Yang	DATE 2-13-15	STRUCTURE DESIGN SECTION 15
DRAWN BY	Herman Mauroschadt	DATE 1-22-15	
CHECKED BY	Fred Feng	DATE 2-13-15	
APPROVED	Jose Higareda	DATE 3-06-15	

PLANNING STUDY
RETAINING WALL NO. 121 (ALTERNATIVE 1)

BRIDGE NO.	CU
SCALE: AS NOTED	EA 01-2981U0

USERNAME => s132486 DATE PLOTTED => 10-MAR-2015 TIME PLOTTED => 10:32

STATE OF CALIFORNIA - DEPARTMENT OF TRANSPORTATION - DIVISION OF STRUCTURES

DIST	COUNTY	ROUTE	KILOMETER POST TOTAL PROJECT
01	LAK	29	37.9/50.9

Caltrans Metric

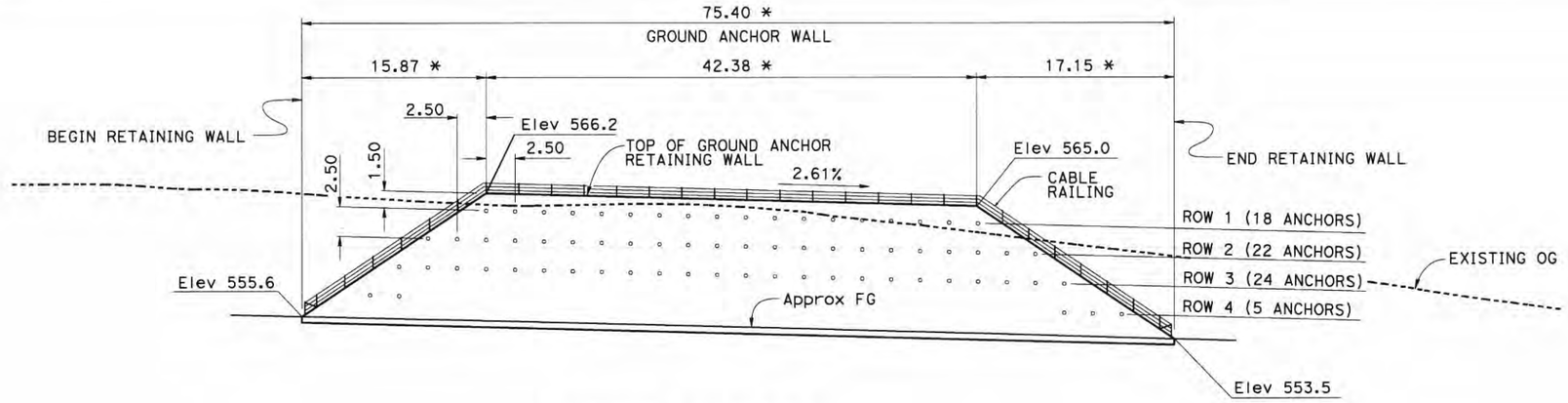

* - MEASURED ALONG "RW" LINE

ASSUMPTIONS:
1. Soil Parameters: r = 120 pcf, Φ = 30°, c = 200 psf
2. Vertical and Horizontal Ground Anchor spacing = 2.5 m
3. Shotcrete = 0.15 m thick
4. Total Ground Anchor length = 15 m

DEVELOPED & MIRRORED ELEVATION
1:250

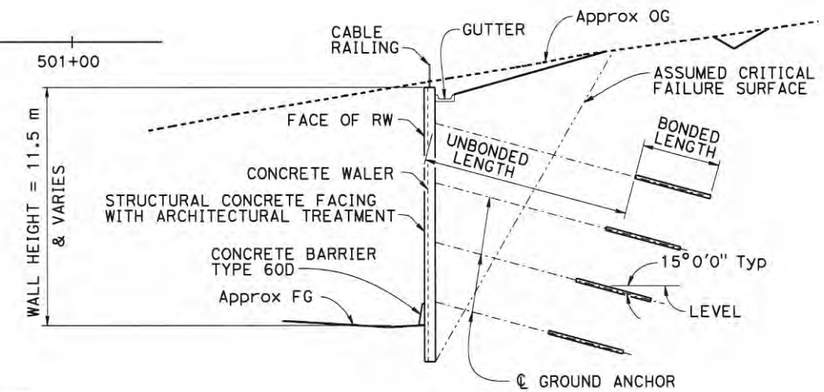

GROUND ANCHOR TYPICAL SECTION
1:125

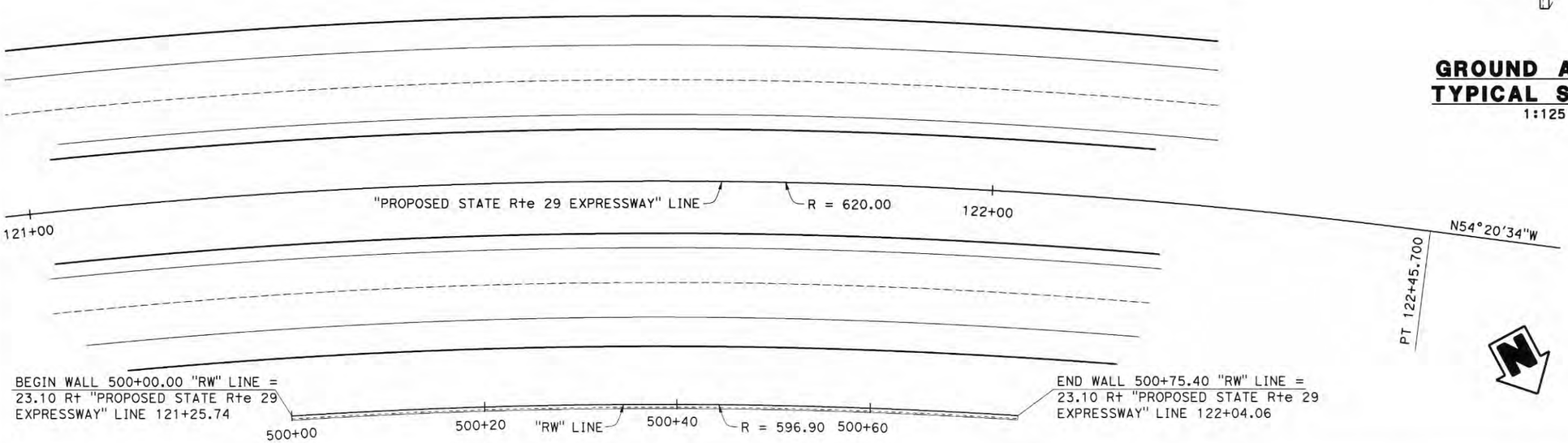

ALL DIMENSIONS ARE IN METERS UNLESS OTHERWISE SHOWN

NOTE:
THE CONTRACTOR MUST VERIFY ALL CONTROLLING FIELD DIMENSIONS BEFORE ORDERING OR FABRICATING ANY MATERIAL.

PLAN
1:250

DESIGNED BY Paul Yang	DATE 2-23-15	STRUCTURE DESIGN SECTION 15	PLANNING STUDY
DRAWN BY Herman Mauroschadt	DATE 1-23-15		RETAINING WALL NO. 121 (ALTERNATIVE 2)
CHECKED BY Fred Feng	DATE 2-13-15		BRIDGE NO. / CU
APPROVED Jose Higareda	DATE 3-06-15		SCALE: AS NOTED / EA 01-2981U0

USERNAME => s132486 DATE PLOTTED => 10-MAR-2015 TIME PLOTTED => 10:51

FILE => rw lake 29 expressway alt 2 aps.dgn

PROBABILISTIC STRUCTURE COST ESTIMATE

[ ] GENERAL PLAN ESTIMATE [x] ADVANCE PLANNING ESTIMATE

Revised - May 15, 2014

		IN EST:	3/11/2015
		OUT EST:	4/2/2015
BRIDGE NAME:	Retaining Wall No. 121 - Alt. 1		
BRIDGE NUMBER:		**DISTRICT:**	01
TYPE:	Soil Nail Wall	**CO:**	LAK
CU:	01	**RTE:**	29
EA:	29811	**PM:**	23.6/31.6
PROJECT ID:	0114000043	**DEPTH**	
		LENGTH	75.4
DESIGN SECTION:	15	**WIDTH**	
# OF STRUCTURES IN PROJECT :	1	**AREA**	
		EST. NO.	1
PRICES BY :	Bryan Letcher	**COST INDEX:**	
PRICES CHECKED BY :		**DATE:**	
QUANTITIES BY:	Paul Yang/Fred Feng	**DATE:**	

INPUT

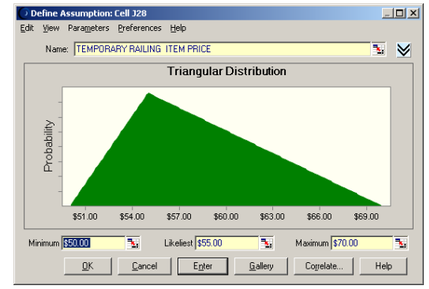

The Assumption Curves, unless noted otherwise, are modeled with a triangular distribution with the "Minimum, Likeliest and Maximum values."

	CONTRACT ITEMS	TYPE	UNIT	QUANTITY	ITEM PRICE RANGE MINIMUM	LIKELIEST	MAXIMUM	AMOUNT
1	STRUCTURE EXCAVATION (SOIL NAIL WALL)		M3	485	$100.00	$120.00	$150.00	$58,200
2	STRUCTURE BACKFILL (SOIL NAIL WALL)		M3	23	$220.00	$260.00	$310.00	$5,980
3	SOIL NAIL ASSEMBLY (SUBHORIZONTAL)		M	6,660	$65.00	$85.00	$110.00	$566,100
4	STRUCTURAL SHOTCRETE		M3	76	$680.00	$850.00	$955.00	$64,600
5	STRUCTURAL CONCRETE		M3	146	$1,100.00	$1,500.00	$1,800.00	$219,000
6	ARCHITECTURAL TREATMENT		M2	681	$95.00	$130.00	$170.00	$88,530
7	BAR REINFORCING STEEL		KG	12,174	$2.80	$3.30	$3.80	$40,174
8	CONCRETE BARRIER (TYPE 60D)		M	79	$280.00	$360.00	$440.00	$28,440
9	CABLE RAILING		M	85	$70.00	$100.00	$130.00	$8,500
10								
11								
12								
13								
14								
15								
16								
17								
18								
19								
20								
21								
22								
23								
24								
25								
26								
27								
28								
29								
30								
							SUBTOTAL	$1,079,524
	TIME RELATED OVERHEAD					10%		$107,952
	MOBILIZATION					10%		$131,942
	SUBTOTAL BRIDGE ITEMS							$1,319,418
	CONTINGENCIES					25%		$329,855
							SUBTOTAL	$1,649,273

Comments

	TYPE	UNIT	QUANTITY	MINIMUM	LIKELIEST	MAXIMUM
BRIDGE REMOVAL						

BRIDGE REMOVAL LUMP SUM PRICE INCLUDES TRO, MOBILIZATION AND CONTINGENCY

Notes

Highlighted cells represent the quantities and prices that are included in the model.
Base Case Estimate is the sum of the Quantity multiplied by "Likeliest" Item Price

BASELINE ESTIMATE TO ASSUMED MIDPOINT OF CONSTRUCTION	
BASE CASE ESTIMATE	$1,649,273

OUTPUT

The estimate ranges generated below were prepared using Crystal Ball software. Crystal Ball software automatically calculates and records the results of thousands of different "what if" cases. Analysis of these scenarios reveals to you the range of possible outcomes, their probability of occurring, the inputs that most impact your model, and where you should focus your efforts.

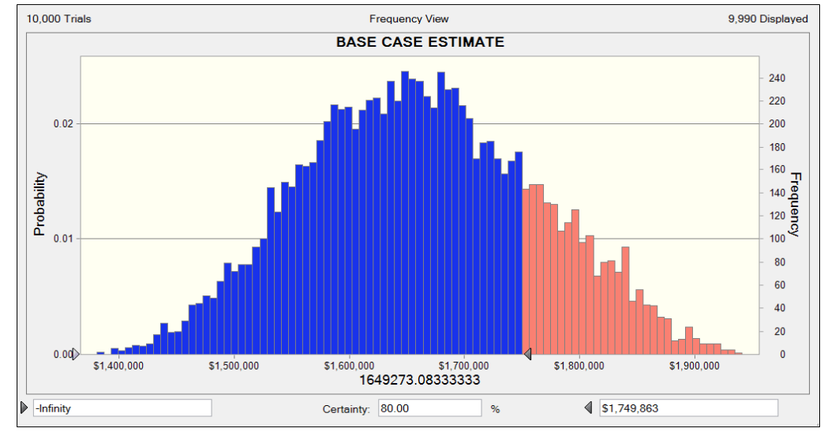

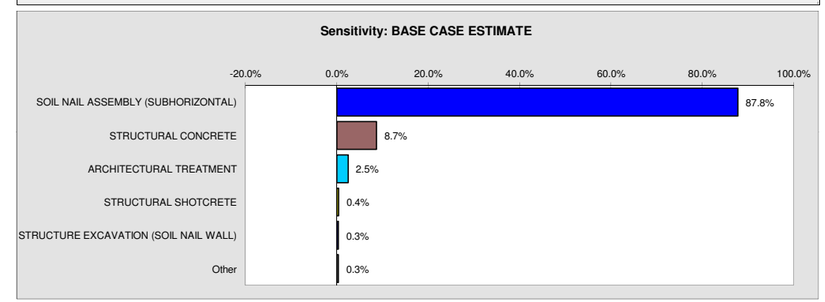

Percentiles:	Forecast values
0%	$1,365,603
10%	$1,532,443
20%	$1,573,066
30%	$1,602,645
40%	$1,631,654
50%	$1,657,914
60%	$1,684,644
70%	$1,714,031
80%	$1,749,863
90%	$1,797,182
100%	$1,971,096

Recommended Range

BASED ON THE ASSUMPTIONS USED TO CREATE THE MODEL, THE DES-STRUCTURE OFFICE ENGINEER RECOMMENDS THAT THE PROGRAMMING LEVEL BUDGET FOR THIS PROJECT BE DESIGNATED AT THE 80% FORECAST VALUE.

80% FORECAST VALUE = $1,750,000.00

***80% Forecast Value Escalated Budget Estimate to Assumed Midpoint of Construction**

Years Beyond Midpoint	Escalation Rate	Escalated Budget Est.
1	2.70%	$1,797,000
2	2.90%	$1,849,000
3	2.00%	$1,886,000
4	1.90%	$1,922,000
5	1.90%	$1,959,000

* Escalated structure cost is provided for information only, actual construction costs may vary. Escalated structure costs provided do not replace Departmental policy to update cost estimates annually. Escalation rates used are based on Global Insight data posted at http://www.dot.ca.gov/hq/oppd/costest/data.htm. Web page updated May 2014.

80 % Forecast
BRIDGE COST PER SQUARE FOOT =
BRIDGE REMOVAL =

Bridge Cost per Square Foot and/or Bridge Removal costs modeled independently. Their 80% Forecast Values Provided for informational purposes only.

PROBABILISTIC STRUCTURE COST ESTIMATE

[ ] GENERAL PLAN ESTIMATE [x] ADVANCE PLANNING ESTIMATE

Revised - May 15, 2014

		IN EST:	3/11/2015
		OUT EST:	4/2/2015
BRIDGE NAME:	Retaining Wall No. 121 - Alt. 2		
BRIDGE NUMBER:		**DISTRICT:**	01
TYPE:	Ground Anchor	**CO:**	LAK
CU:	01	**RTE:**	29
EA:	29811	**PM:**	23.6/31.6
PROJECT ID:	0114000043	**DEPTH**	
		LENGTH	75.4
DESIGN SECTION:	15	**WIDTH**	
# OF STRUCTURES IN PROJECT :	1	**AREA**	
		EST. NO.	1
PRICES BY :	Bryan Letcher	**COST INDEX:**	
PRICES CHECKED BY :		**DATE:**	
QUANTITIES BY:	Paul Yang/Fred Feng	**DATE:**	

INPUT

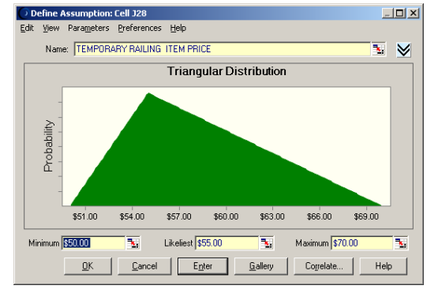

The Assumption Curves, unless noted otherwise, are modeled with a triangular distribution with the "Minimum, Likeliest and Maximum values."

	CONTRACT ITEMS	TYPE	UNIT	QUANTITY	ITEM PRICE RANGE MINIMUM	LIKELIEST	MAXIMUM	AMOUNT
1	STRUCTURE EXCAVATION (GROUND ANCHOR WALL)		M3	604	$100.00	$120.00	$150.00	$72,480
2	STRUCTURE BACKFILL (GROUND ANCHOR WALL)		M3	23	$220.00	$260.00	$310.00	$5,980
3	GROUND ANCHOR (SUBHORIZONTAL)		EA	69	$3,000.00	$3,800.00	$4,500.00	$262,200
4	STRUCTURAL SHOTCRETE		M3	114	$680.00	$850.00	$955.00	$96,900
5	STRUCTURAL CONCRETE (WHALER)		M3	153	$1,100.00	$1,500.00	$1,800.00	$229,500
6	ARCHITECTURAL TREATMENT		M2	681	$95.00	$130.00	$170.00	$88,530
7	BAR REINFORCING STEEL		KG	13,391	$2.80	$3.30	$3.80	$44,190
8	CONCRETE BARRIER (TYPE 60D)		M	79	$280.00	$360.00	$440.00	$28,440
9	CABLE RAILING		M	85	$70.00	$100.00	$130.00	$8,500
10								
11								
12								
13								
14								
15								
16								
17								
18								
19								
20								
21								
22								
23								
24								
25								
26								
27								
28								
29								
30								
							SUBTOTAL	$836,720
	TIME RELATED OVERHEAD					10%		$83,672
	MOBILIZATION					10%		$102,266
	SUBTOTAL BRIDGE ITEMS							$1,022,658
	CONTINGENCIES					25%		$255,665
							SUBTOTAL	$1,278,323

Comments

	TYPE	UNIT	QUANTITY	MINIMUM	LIKELIEST	MAXIMUM
BRIDGE REMOVAL						

BRIDGE REMOVAL LUMP SUM PRICE INCLUDES TRO, MOBILIZATION AND CONTINGENCY

Notes

Highlighted cells represent the quantities and prices that are included in the model.
Base Case Estimate is the sum of the Quantity multiplied by "Likeliest" Item Price

BASELINE ESTIMATE TO ASSUMED MIDPOINT OF CONSTRUCTION	
BASE CASE ESTIMATE	$1,278,323

OUTPUT

The estimate ranges generated below were prepared using Crystal Ball software. Crystal Ball software automatically calculates and records the results of thousands of different "what if" cases. Analysis of these scenarios reveals to you the range of possible outcomes, their probability of occurring, the inputs that most impact your model, and where you should focus your efforts.

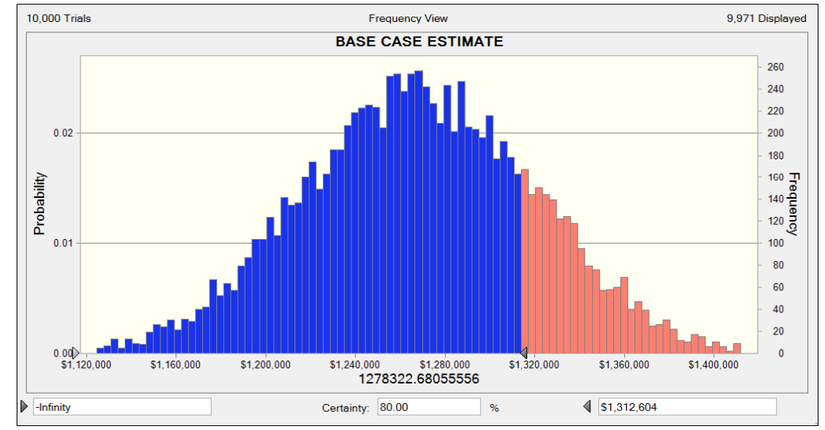

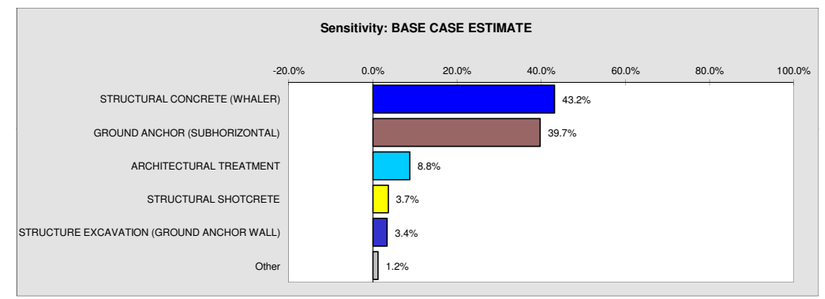

Percentiles:	Forecast values
0%	$1,083,462
10%	$1,201,789
20%	$1,224,216
30%	$1,240,760
40%	$1,255,539
50%	$1,268,157
60%	$1,282,181
70%	$1,296,217
80%	$1,312,317
90%	$1,334,071
100%	$1,431,650

Recommended Range

BASED ON THE ASSUMPTIONS USED TO CREATE THE MODEL, THE DES-STRUCTURE OFFICE ENGINEER RECOMMENDS THAT THE PROGRAMMING LEVEL BUDGET FOR THIS PROJECT BE DESIGNATED AT THE 80% FORECAST VALUE.

80% FORECAST VALUE = $1,312,000.00

***80% Forecast Value Escalated Budget Estimate to Assumed Midpoint of Construction**

Years Beyond Midpoint	Escalation Rate	Escalated Budget Est.
1	2.70%	$1,348,000
2	2.90%	$1,387,000
3	2.00%	$1,415,000
4	1.90%	$1,442,000
5	1.90%	$1,469,000

* Escalated structure cost is provided for information only, actual construction costs may vary. Escalated structure costs provided do not replace Departmental policy to update cost estimates annually. Escalation rates used are based on Global Insight data posted at http://www.dot.ca.gov/hq/oppd/costest/data.htm. Web page updated May 2014.

80 % Forecast
BRIDGE COST PER SQUARE FOOT =
BRIDGE REMOVAL =

Bridge Cost per Square Foot and/or Bridge Removal costs modeled independently. Their 80% Forecast Values Provided for informational purposes only.

State of California
DEPARTMENT OF TRANSPORTATION

California State Transportation Agency

Memorandum

Serious drought!
Help save water!

To: **MARK SOBOTA**
Design E1
District 01

Date: October 18, 2016

File: 01-LAK-29-PM 23.6/31.6
Lake 29 Expressway
01-2981U_ (0100000090)

From: **JOHN FUJIMOTO**
Technical Liaison Engineer
Office of Bridge Design North/Central
Division of Engineering Services

Subject: Structure APS Cost Estimate Update Transmittal

In response to the October 12, 2016, email request from Mark Sobota, District 01-Design, for an APS cost estimate update to construct four reinforced concrete box culvert structures along Route 29 and Route 281, the following information is provided.

The updated structure costs to construct reinforced concrete box culvert structures, as originally depicted in the APS dated May 2012, including time related overhead, mobilization and contingencies is as follows:

Bridge Name	Bridge Number	Construction Cost
Thurston Creek Bridge (Rte 29, SVO Line), PM 27.18	TBD	$693,000
Thurston Creek Bridge (Rte 29), PM 27.73	TBD	$1,376,000
Thurston Creek Bridge (Rte 281, TAO Line), PM 16.91	TBD	$321,000
Thurston Creek Bridge (Rte 281), PM 16.93	TBD	$1,372,000

The cost estimates are based on the following assumptions:

1. Scope of work is unchanged from that depicted in the May 2012 APS. All prior stated conditions and assumptions remain the same.
2. Cost estimates include 10% TRO, 10% mobilization and 25% contingency.

The cost estimate information provided is an update to current construction costs, provided by the Structure Office Engineer, Cost Estimate Branch.

If you have any questions regarding the information provided, please contact me at (916) 227-8757.

Attachments

c: Eskinder Taddese, Project Liaison Engineer
Jeff Sims, BDB 1
Jose Higareda, BDB 15
Jaime Matteoli, D01 PM
Ed Cramer, D01 Design PE

STATE OF CALIFORNIA - DEPARTMENT OF TRANSPORTATION - DIVISION OF STRUCTURES

DIST	COUNTY	ROUTE	POST MILE
01	Lak	29	27.18

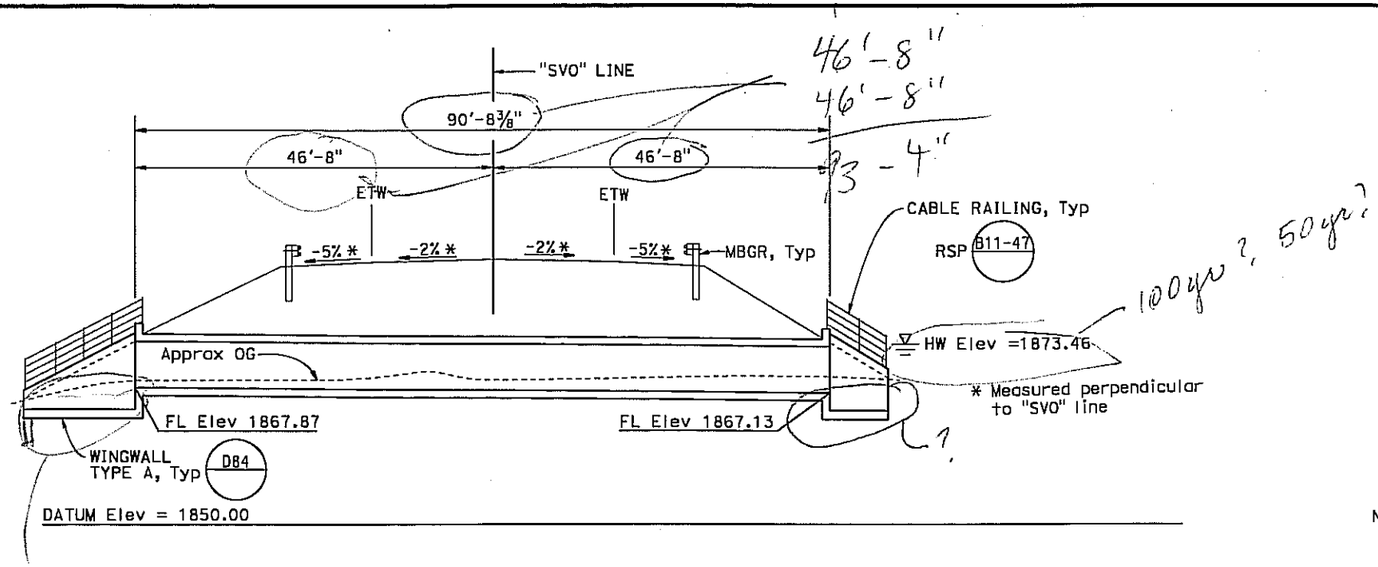

LONGITUDINAL SECTION

1" = 20'

DATE OF ESTIMATE		- -
BRIDGE REMOVAL	=	N/A
STRUCTURE DEPTH	=	7'-11½"
LONGITUDINAL SECTION LENGTH	=	90'-8⅜"
TYPICAL SECTION WIDTH	=	38'-9"
AREA	=	3515 SF
COST/ SF INCLUDING 10% MOBILIZATION & 25% CONTINGENCY	=	
TOTAL COST	=	

NOTES:

1. Stage construction and traffic handling is not necessary at this location.
2. APS details, dimensions, and other information have been converted from metric to english units using 1'-0" = 0.3048 m.
3. For RCB culvert details not shown, see Standard Plan D81. Use maximum earth cover of 10'-0".

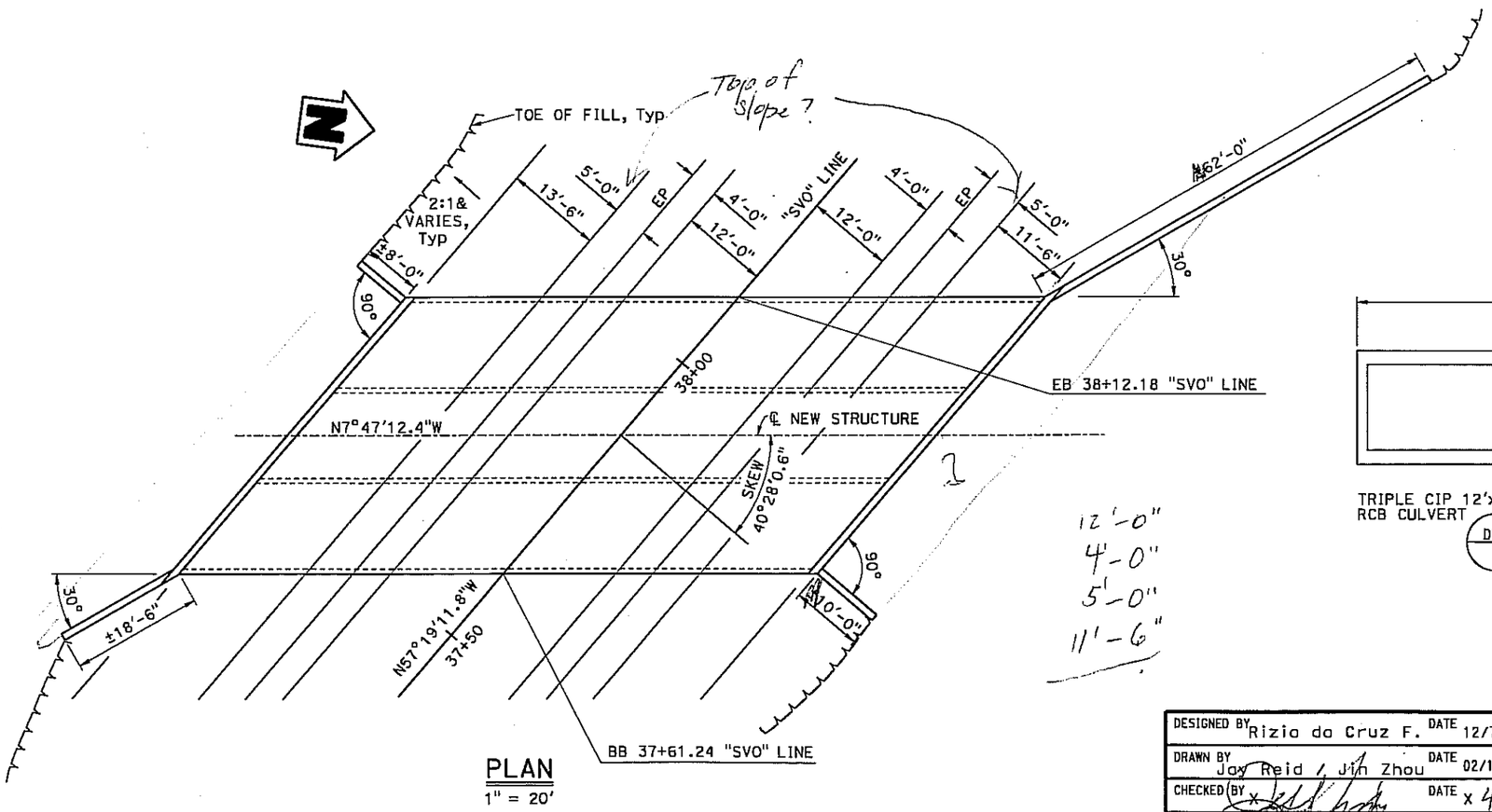

PLAN

1" = 20'

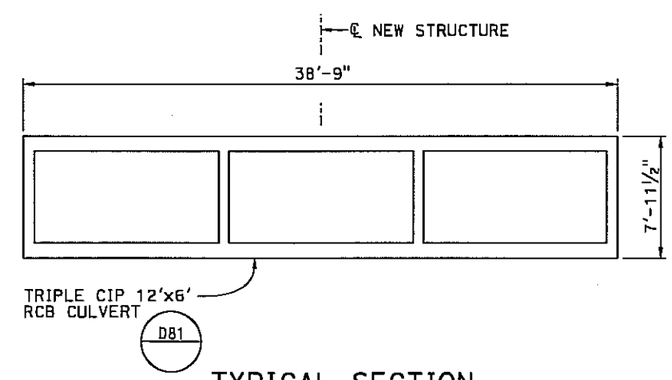

TYPICAL SECTION

1" = 10'

DESIGNED BY Rizio da Cruz F.	DATE 12/7/11	STRUCTURE DESIGN BRANCH 1	PLANNING STUDY
DRAWN BY Jay Reid / Jin Zhou	DATE 02/15/12		THURSTON CREEK BRIDGE ("SVO" LINE)
CHECKED BY	DATE X 4/2/2012		UNIT: 3576 / BRIDGE No. X
APPROVED	DATE X 4/2/2012		SCALE: As Shown / PROJECT No. & PHASE: 01000000900

USERNAME => s134925 DATE PLOTTED => 22-MAR-2012 TIME PLOTTED => 15:14

STATE OF CALIFORNIA - DEPARTMENT OF TRANSPORTATION - DIVISION OF STRUCTURES

DIST	COUNTY	ROUTE	POST MILE
01	Lak	29	27.23

You should add another sheet showing staging.

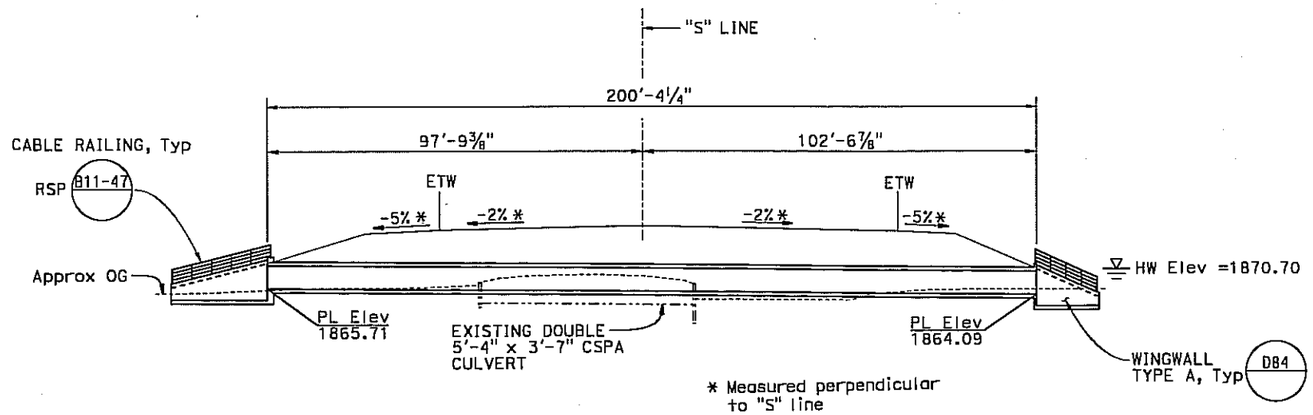

LONGITUDINAL SECTION

1" = 40'

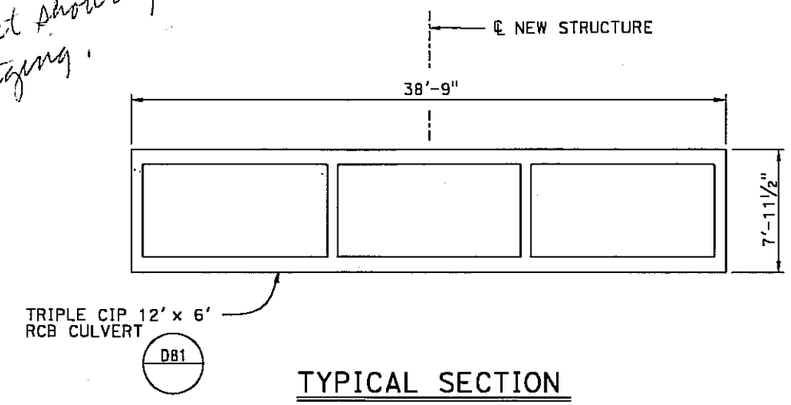

TYPICAL SECTION

1" = 10'

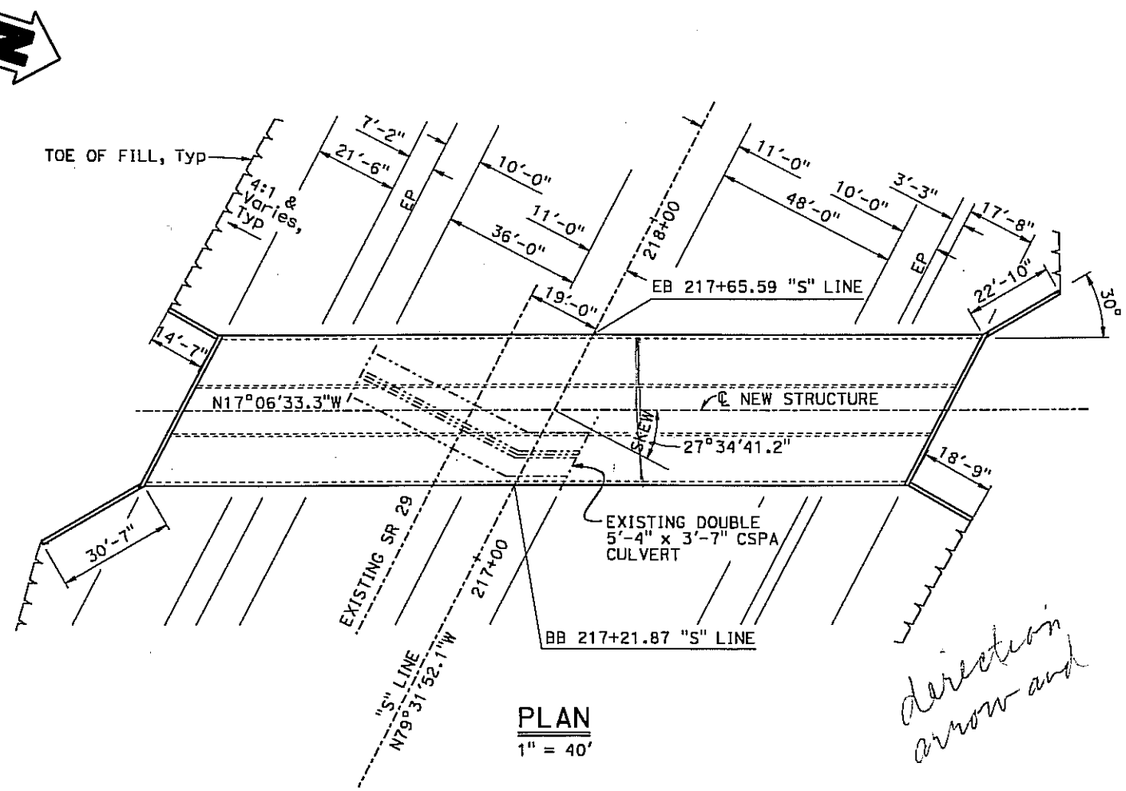

PLAN

1" = 40'

direction arrow and

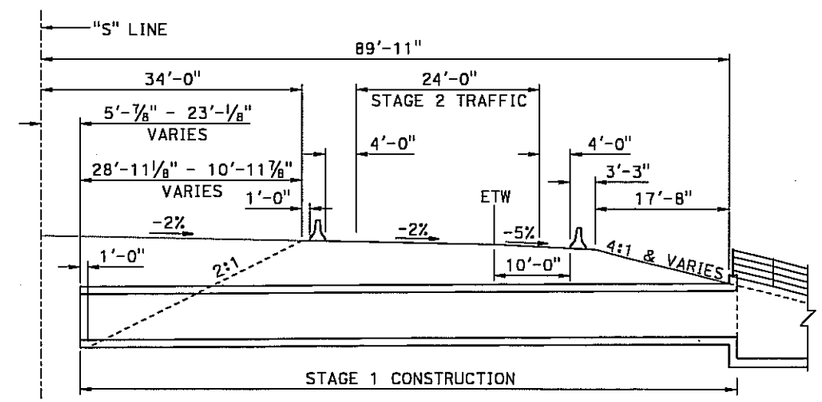

PART STAGE CONSTRUCTION

1" = 20'

DATE OF ESTIMATE		
CULVERT REMOVAL	=	174'-0"
STRUCTURE DEPTH	=	7'-11½"
Long SECTION LENGTH	=	200'-4¼"
Typ Section WIDTH	=	38'-9"
AREA	=	7763.49 ft²
COST/ SF INCLUDING 10% MOBILIZATION & 25% CONTINGENCY	=	
TOTAL COST	=	

NOTES:

1. APS details, dimensions and other information have been converted from metric to english units using 1'-0" = 0.3048 meter.
2. Dimensions and details shown in "PART STAGE CONSTRUCTION VIEW" are perpendicular to "S-Line".
3. For RCB culvert details not shown, see Standard Plan D81. Use maximum earth cover of 10'-0".

DESIGNED BY Daniel Sessions	DATE 12/9/11	STRUCTURE DESIGN BRANCH 1	PLANNING STUDY
DRAWN BY J. Reid / J. Zhou	DATE 03/21/12		THURSTON CREEK BRIDGE (SR 29)
CHECKED BY	DATE 4/2/2012		UNIT: 3576 / BRIDGE No. X
APPROVED	DATE 4/2/2012		SCALE: AS SHOWN / PROJECT No. & PHASE: 01000000900

USERNAME => e134008 DATE PLOTTED => 23-MAR-2012 TIME PLOTTED => 09:59

STATE OF CALIFORNIA - DEPARTMENT OF TRANSPORTATION - DIVISION OF STRUCTURES

DIST	COUNTY	ROUTE	POST MILE
01	Lak	281	16.91

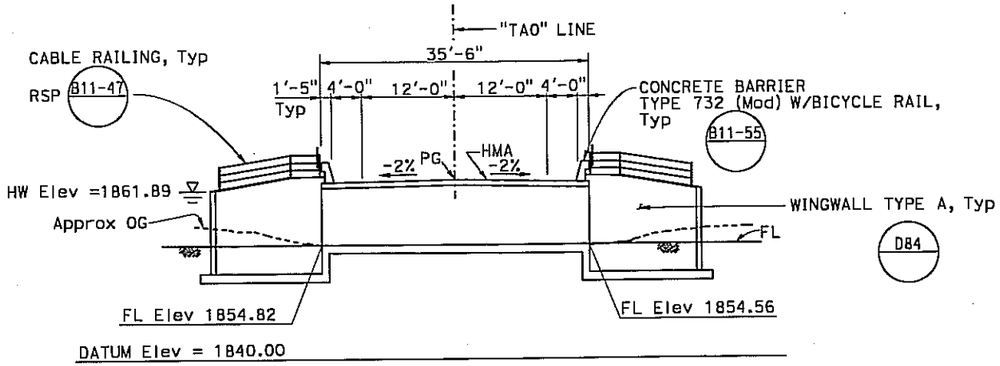

LONGITUDINAL SECTION

1" = 20'

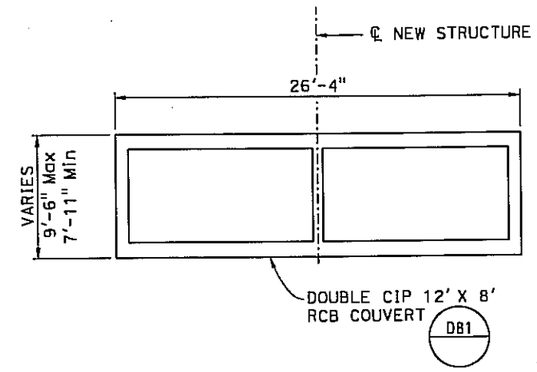

TYPICAL SECTION

1" = 10'

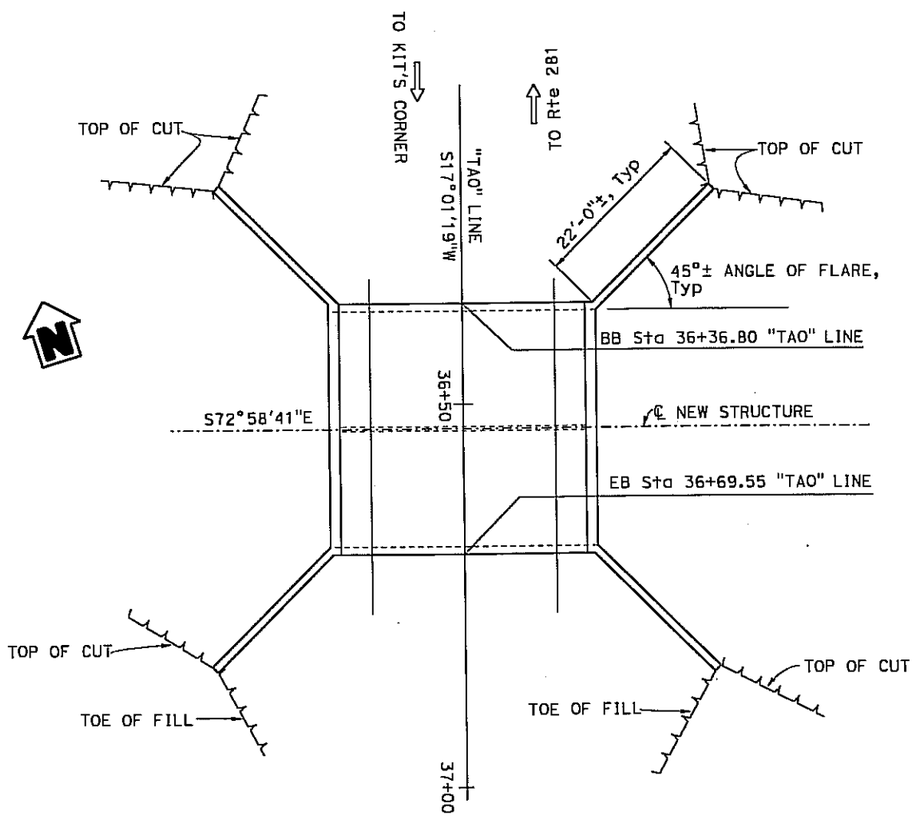

PLAN

1" = 20'

DATE OF ESTIMATE	
BRIDGE REMOVAL	N/A
STRUCTURE DEPTH	7'-11" TO 9'-6"
Long SECTION LENGTH	35'-6"
Typ SECTION WIDTH	26'-4"
AREA	935 SF
COST/SF, INCLUDING 10% MOBILIZATION AND 25% CONTIGENCY	
TOTAL COST	

NOTES:

1. Stage construction and traffic handling is not necessary at this location.
2. APS details, dimensions, and other information have been converted from metric to english units using 1'-0" = 0.3048 m.
3. For RCB culvert details not shown, see Standard Plan D81. Top of culvert is exposed.

DESIGNED BY Greg Thornton	DATE 09/19/11	STRUCTURE DESIGN BRANCH 1	PLANNING STUDY
DRAWN BY Jin Zhou	DATE 02/28/12		THURSTON CREEK BRIDGE ("TAO" LINE)
CHECKED BY X	DATE X 4/2/2012		UNIT: 3576 / BRIDGE No. X
APPROVED X	DATE X 4/2/2012		SCALE: As Shown / PROJECT No. & PHASE: 0100000900

CONTRACT No.: 01-29810

USERNAME => s134008 DATE PLOTTED => 02-APR-2012 TIME PLOTTED => 13:03

STATE OF CALIFORNIA - DEPARTMENT OF TRANSPORTATION - DIVISION OF STRUCTURES

DIST	COUNTY	ROUTE	POST MILE
01	Lak	281	16.93

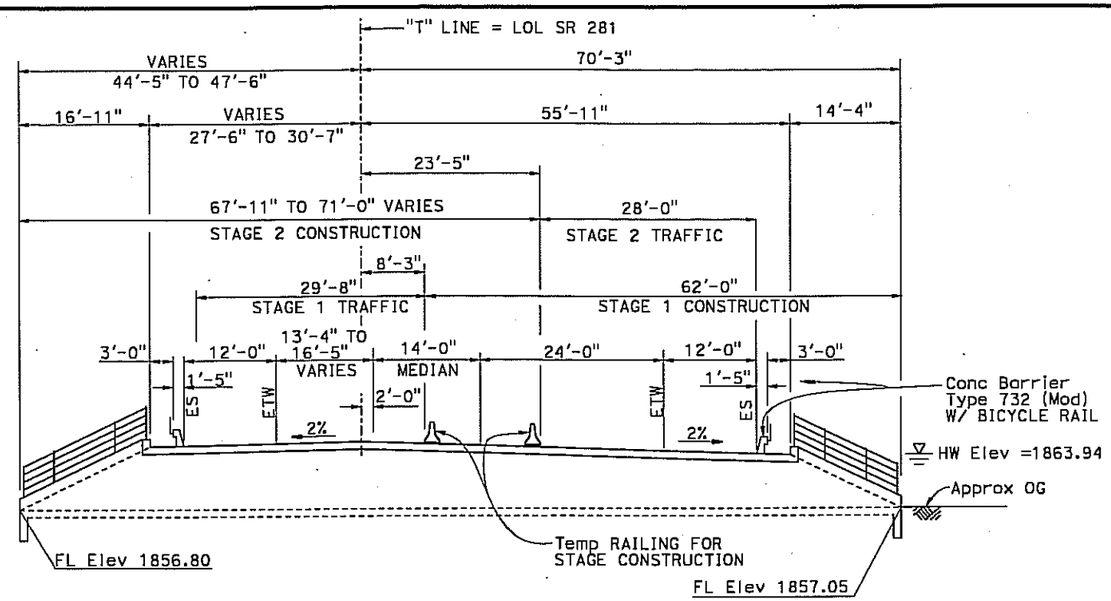

DATUM Elev = 1840.00

LONGITUDINAL SECTION

1" = 20'

NOTES:

Traffic will pass through construction site.
Stage construction is required.

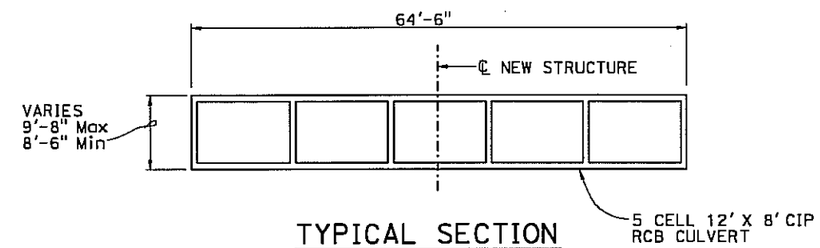

TYPICAL SECTION

1" = 20'

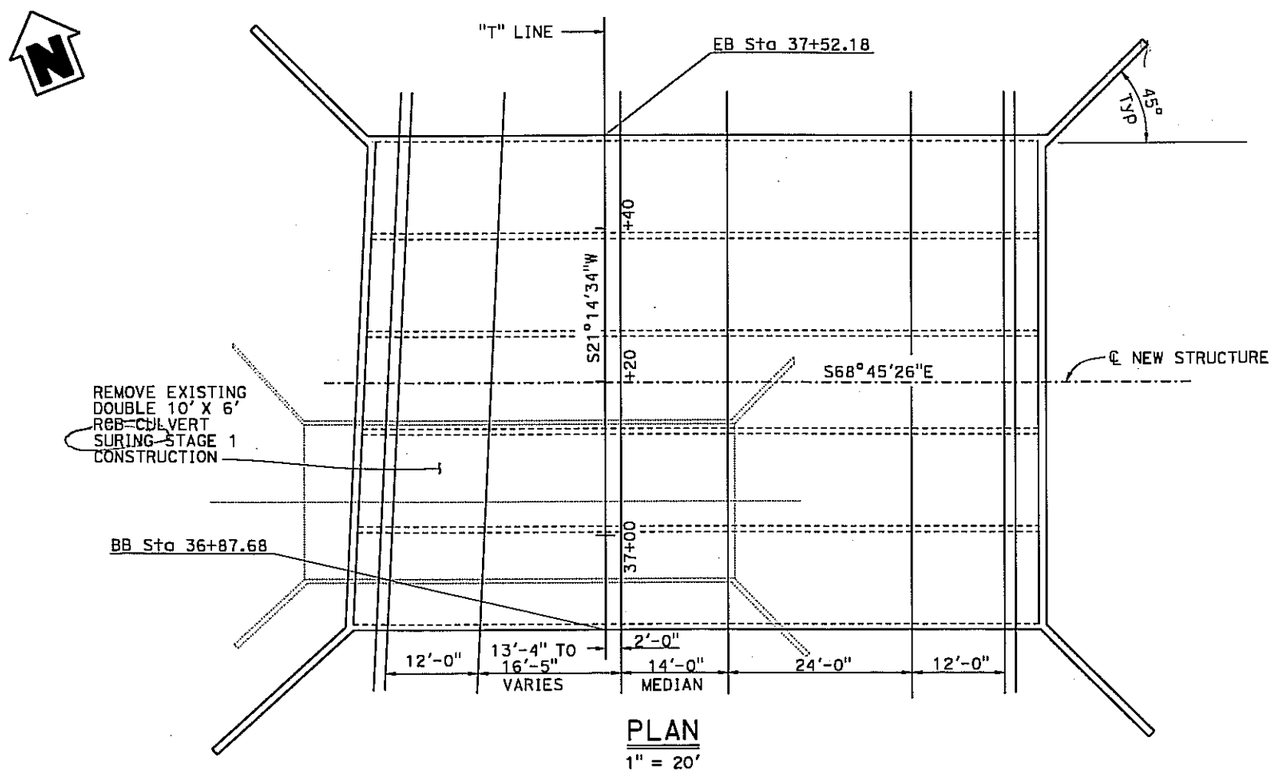

PLAN

1" = 20'

DATE OF ESTIMATE	=	3-29-12
BRIDGE REMOVAL	=	
STRUCTURE DEPTH	=	Varies 9'-8" Max, 8'-6" min
LONGITUDINAL SECTION LENGTH	=	Varies 81'-6" Max, 82'-5" Min
TYPICAL SECTION WIDTH	=	64'-6"
AREA	=	5286 (Avg).
COST/ SF INCLUDING 10% MOBILIZATION & 25% CONTINGENCY	=	
TOTAL COST	=	

DESIGNED BY Greg Jones	DATE xxx	STRUCTURE DESIGN BRANCH 1	PLANNING STUDY
DRAWN BY Jin Zhou	DATE 03/26/12		THURSTON CREEK BRIDGE (SR 281)
CHECKED BY	DATE 4/2/2012		UNIT: 3576 / BRIDGE No. X
APPROVED	DATE 4/2/2012		SCALE: As Shown / PROJECT No. & PHASE: 01000000900

USERNAME => s134008 DATE PLOTTED => 28-MAR-2012 TIME PLOTTED => 10:22

01-LAK-29
PM 23.6/31.6
01-2981U0
01 0000 0090

ATTACHMENT G
COST ESTIMATES

Preliminary Cost Estimate Summary

Type of Estimate : PA&ED
Description: Lake 29 Improvement Project
Scope : Upgrade 2-lane Conventional Highway to 4-lane Expressway

	Big D (8 miles) Costs (01-2981U STIP) (2016)	Segment 2C (3 miles) Costs (01-29821 STIP) (01-29811 SHOPP) (2016)	Segments 2A & 2B Big E (5 miles) Costs (2016)
Roadway	$167,710,750	$61,393,000	$109,800,580
Structures	$5,512,000	$1,750,000	$3,762,000
Sub Total	**$173,200,000**	**$63,143,000**	**$113,600,000**
R/W			
A. Total Acquistion Costs	$10,491,720	$6,318,814	
B. Appraisal Fee Estimate	$245,000	$115,000	
C. Mitigation Acquistion/Credits	$4,819,406	$1,400,280	
D. Proj Dev Fees	$131,511	$101,500	
E. Utility Relocation (State)	$17,991,000	$5,031,000	Not Itemized
F. Relocations Assistance	$80,000	$40,000	
G. Clearance/ Demolition	$45,005	$275,000	
H. Title & Escrow	$49,000	$23,000	
I. Total Estimated R/W	$33,852,642	$13,304,594	
CALL	**$33,853,000**	**$13,305,000**	**$20,548,000**
J. Construction Contract Work	$80,000	$80,000	$80,000
TOTAL	**$207,053,000**	**$76,448,000**	**$134,148,000**

Program Manager
(Approval for STIP & SHOPP) Jaime Matteoli

District SHOPP Program Advisor
(Approval for SHOPP only) David Morgan

District STIP Program Advisor
(Approval for STIP only) Brad Mettam

October 2016 Big D Estimate

		CCI	
Escalation factor used from Spring 2014 Estimate	2014-2nd Qtr.	109.11	**0.17**
	2016-2nd Qtr.	130.75	

I. ROADWAY ITEMS

Section 1 Earthwork

Description	Quantity	Unit		Unit Price		Item Cost	Section Cost
Roadway Excavation [1,2]	1,260,000	m3	$	14.80	$	18,650,438	
Rock Excavation (blast/ram)	76,300	m3	$	34.97	$	2,667,845	
Embankment [1,2,3]	1,071,400	m3	$	-	$	-	
Excess Material [1,2,3]	264,900	m3	$	-	$	-	
Clearing & Grubbing	134	HA	$	17,482.60	$	2,342,668	
Obliterate Surfacing	8,800	m2	$	15.15	$	133,334	
Develop Water Supply	1	LS	$	699,304.02	$	699,304	
Purchase Water	1	LS	$	1,270,402.29	$	1,270,402	
						Subtotal Earthwork:	$25,763,992

Notes:

[1] Roadway Excavation Quantity includes cost of Embankment, Wetland Surcharge, and Excess Material

[2] These # do not include excess from other items

[3] Embankment quantity, no fluff factor

[4] Wetland Surcharge is paid as Roadway Excavation

Section 2 Pavement Structural Section

Description	Quantity	Unit		Unit Price		Item Cost	Section Cost
Rubberized Bonded Wearing Course Gap Graded (RBWC-G) (PG 64-16)	25,800	TONNE	$	115.00	$	2,967,000	
Rubberized Hot Mix Asphalt (Gap Graded) (RHMA-G) (PG 64-16)	63,100	TONNE	$	120.00	$	7,572,000	
Hot Mix Asphalt (Type A) (PG 70-10)	203,700	TONNE	$	100.00	$	20,370,000	
Class 2 Aggregate Base	68,700	m3	$	39.00	$	2,679,300	
Tack Coat	376	TONNE	$	500.00	$	188,000	
						Subtotal Pavement Structural Section:	$33,776,300

Notes:

Quantity and Cost of safety edge not included

Section 3 Drainage

Description	Quantity	Unit		Unit Price		Item Cost	Section Cost
Drainage - Culverts	1	LS	$	4,853,169.87	$	4,853,170	
Drainage-Ditches/Dike/OSD	1	LS	$	2,602,576.44	$	2,602,576	
Underdrains @ Toe of Cut Slopes	8200	m	$	162.01	$	1,328,445	
Drainage Basins/Maintenance Access Roads/Biostrip/Swales	1	LS	$	891,612.62	$	891,613	
						Subtotal Drainage:	$9,675,803

Section 4 Specialty Items

Description	Quantity	Unit		Unit Price		Item Cost	Section Cost
Erosion Control (Type D)	99	LS	$	41,375.49	$	4,096,173	
Highway Planting	1	LS	$	2,214,462.72	$	2,214,463	
Slope Protection - Stepping	1	LS	$	664,338.81	$	664,339	
Temporary Fence (Type ESA)	10,600	m	$	17.48	$	185,316	
Remove Fence	15,600	m	$	11.66	$	181,819	
Temporary Fence	11,700	m	$	27.97	$	327,274	
Fence (Type WM, Metal Post)	28,000	m	$	17.48	$	489,513	
Fence (Type CL 1.8)	3,500	m	$	58.28	$	203,964	
MBGR WB	12	EA	$	3,846.17	$	46,154	
MBGR Terminal End - Type XT	16	EA	$	5,244.78	$	83,916	
MBGR Buried Post End Anchor (Std Plan A77I2)	2	EA	$	1,165.51	$	2,331	
MBGR Wood Posts	305	m	$	110.72	$	33,771	
Temporary K-Rail	13,400	m	$	47.79	$	640,329	
Reset Temporary K-Rail	25,100	m	$	19.81	$	497,322	
Prepare Storm Water Pollution	1	LS	$	28,438.36	$	28,438	
Construction Site BMP's (SWDR 1.5%)	1	LS	$	10,448,767.50	$	10,448,767	
Misc. Iron and Steel (Level Spreader)	25,610	LB	$	1.46	$	37,311	
Structural Concrete (Level Spreader)	220	CY	$	1,515.16	$	333,335	
RSP (1/4 Ton) (Level Spreader)	600	m3	$	145.69	$	87,413	
Sediment Traps	18	EA		$10,000.00	$	180,000	
Misc. Iron and Steel (Retaining Wall - Manning Flat)	70,660	LB		$1.25	$	88,325	
Structural Concrete (Retaining Wall - Manning Flat)	570	CY		$1,300.00	$	741,000	
Cable Railing (Wildlife Crossing)	204	LF		$100.00	$	20,400	
Wildlife Exclusion Fence (Wildlife Crossing)	11,300	LF		$23.00	$	259,900	
Misc. Iron and Steel (Wildlife Crossing)	64,764	LB		$1.25	$	80,955	
Structural Concrete, Box Culvert (Wildlife Crossing)	324	CY		$1,300.00	$	421,200	
Minor Concrete (Minor Structure) (Wildlife Crossing)	203	CY		$3,000.00	$	609,000	
Ditch Excavation (Wildlife Crossing)	2,617	CY		$45.00	$	117,765	
Wildlife Escape Ramp (Wildlife Crossing)	8	EA		$16,400.00	$	131,200	
Hazardous Waste Mitigation Work	1	LS	$	699,304.02	$	699,304	
Progress Schedule (CPM)	1	LS	$	20,979.12	$	20,979	
Time Related Overhead	620	wday	$	6,293.74	$	3,902,116	
R/W Construction Contract Work	1	LS	$	171,329.48	$	171,329	
Resident Engineer Office Space	1	LS	$	178,322.52	$	178,323	
RSP (1/4 Ton)	980	m3	$	145.69	$	142,775	
RSP (backing)	400	m3	$	139.86	$	55,944	
RSP Fabric	990	m2	$	4.08	$	4,038	
Mainline Traffic Stage Detours	1	LS	$	4,230,789.29	$	4,230,789	
Box Culvert Stage Detours	1	LS	$	641,028.68	$	641,029	
Rebuild/Rehab Disposal Roads	1	LS	$	1,144,527.57	$	1,144,528	
						Subtotal Specialty Items:	$34,442,847

Section 5 Traffic Items

Description	Quantity	Unit	Unit Price	Item Cost	Section Cost
Highway Lighting (SR-29)	1	LS	$ 944,060.42	$ 944,060	
Traffic Stripe -100 mm (Thermoplastic)	121,000	m	$ 1.40	$ 169,232	
Traffic Stripe -200 mm (Thermoplastic)	10,800	m	$ 4.66	$ 50,350	
Pavement Marker (Retroreflective-Recessed)	4400	EA	$ 15.15	$ 66,667	
Pavement Marker (Retro-Reflective)	4600	EA	$ 15.15	$ 69,697	
Thermoplastic Traffic Markings	1100	m2	$ 72.26	$ 79,488	
Construction Area Signs	1	LS	$ 418,416.90	$ 418,417	
Traffic Control Systems	1	LS	$ 2,052,224.18	$ 2,052,224	
Traffic Handling Plan	1	LS	$ 268,066.54	$ 268,067	
Traffic Count Station	1	LS	$ 37,296.21	$ 37,296	
Remove Traffic Count Station	1	LS	$ 5,827.53	$ 5,828	
COZEEP	1	LS	$ 282,052.62	$ 282,053	
Traffic Signals	1	LS	$ 237,180.61	$ 237,181	
Maintain Traffic (flagging)	1	LS	$ 5,011,678.78	$ 5,011,679	
PCMS	6	EA	$ 58,858.09	$ 353,149	
Roadside Signs	1	LS	$ 384,617.21	$ 384,617	
				Subtotal Traffic Items:	$10,430,003

Subtotal Sections 1 thru 5: $114,088,945

Section 6 Minor items

Minor Items Markup	5.00%	$5,704,447
TOTAL SECTIONS 1 THRU 6		**$119,793,393**

Section 7 Roadway mobilization

Roadway Mobilization Markup	10.00%	**$11,979,339**

Section 8 Roadway Additions

Supplemental Work	10.00%	$11,979,339
Contingencies	20.00%	$23,958,679
Total roadway Additions:		**$35,938,018**

TOTAL ROADWAY ITEMS (SECTION 1 through 8) **$167,710,750**

II. STRUCTURES ITEMS:

STRUCTURE (1)

Bridge Name	Thurston Creek (Route 29, S-Line, Main)
Structure Type	CIP RC Box Culvert
Width (out to out) - (m)	200.35 ft
Length (begin to end bridge)-(m)	38.75 ft
Total Area - (m2)	7,764

Per DES Estimate Call Structure 1 Estimate= **$1,376,000**

STRUCTURE (2)

Bridge Name	Thurston Creek (Route 29, SVO Line)
Structure Type	CIP RC Box Culvert
Width (out to out) - (m)	93.33
Length (begin to end bridge)-(m)	38.75 ft
Total Area - (m2)	3,617

Per DES Estimate Call Structure 2 Estimate= **$693,000**

STRUCTURE (3)

Bridge Name	Thurston Creek (Route 281, T-Line, Main)
Structure Type	CIP RC Box Culvert
Width (out to out) - (m)	84.96 ft
Length (begin to end bridge)-(m)	64.50 ft
Total Area - (m2)	5,480

Per DES Estimate Call Structure 3 Estimate= **$1,372,000**

Big D
2 of 3

STRUCTURE (4)

Bridge Name	Thurston Creek (Route 281, TAO Line)
Structure Type	CIP RC Box Culvert
Width (out to out) - (m)	35.50 ft
Length (begin to end bridge)-(m)	26.33 ft
Total Area - (m2)	935

Per DES Estimate Call Structure 4 Estimate= **$321,000**

STRUCTURE (5)

Retaining Wall

Per DES Estimate Call Structure 5 Estimate= **$1,750,000**

TOTAL, STRUCTURES 1-5 **$5,512,000**

TOTAL COST w/o R/W & ENVIRO MITIGATION: **$173,200,000**

Big D
3 of 3

October 2016 Segment Big E (Seg 2A + Seg 2B = Big E) Estimate

	CCI	
2014-2nd Qtr	109.11	**0.17**
2016-2nd Qtr	130.75	

I. ROADWAY ITEMS

Section 1 Earthwork

Description	Quantity	Unit		Unit Price		Item Cost	Section Cost
Roadway Excavation	513,000	m3	$	15.04	$	7,712,974	
Embankment (NP)	629,800	m3	$	-	$	-	
Import Borrow	116,800	m3	$	15.00	$	1,752,000	
Clearing & Grubbing	107	HA	$	17,482.60	$	1,870,638	
Obliterate Surfacing	6,800	m2	$	15.15	$	103,031	
Develop Water Supply	1	LS	$	326,341.87	$	326,342	
Purchase Water	1	LS	$	815,854.68	$	815,855	
						Subtotal Earthwork:	$12,580,839

note 1 - In bank quan, no fluff factor
note 2 - These # do not include excess from other items
note 3 - actual unit price is ; this is quantity is also counted in the Road Excavation and wetland surcharge quantities
note 4 - actual unit price is $20 ; this is quantity is also counted in the Road Excavation quantity
note 5 - Earthwork place during 2C in 2A and 2B quantified & costed in 2C

Section 2 Pavement Structural Section

Description	Quantity	Unit		Unit Price		Item Cost	Section Cost
Rubberized Bonded Wearing Course Gap Graded (RBWC-G) (PG 64-16)	22,700	TONNE	$	115.00	$	2,610,500	
Rubberized Hot Mix Asphalt (Gap Graded) (RHMA-G) (PG 64-16)	46,100	TONNE	$	120.00	$	5,532,000	
Hot Mix Asphalt (Type A) (PG 70-10)	155,700	TONNE	$	100.00	$	15,570,000	
Class 2 Aggregate Base	50,400	m3	$	39.00	$	1,965,600	
Tack Coat	604	TONNE	$	500.00	$	302,000	
						Subtotal Pavement Structural Section:	$25,980,100

note - qty/cost of safety edge not added in

Section 3 Drainage

Description	Quantity	Unit		Unit Price		Item Cost	Section Cost
Drainage - Culverts	1	LS	$	3,595,588.15	$	3,595,588	
Drainage-Ditches/Dike/OSD	1	LS	$	1,748,260.04	$	1,748,260	
Underdrains @ Toe of Cut Slopes	5140	m	$	162.01	$	832,708	
Drainage-Basins/MAR/Biostrip/swales	1	LS	$	349,652.01	$	349,652	
						Subtotal Drainage:	$6,526,208

Section 4 Specialty Items

Description	Quantity	Unit		Unit Price		Item Cost	Section Cost
Erosion Control (Type D)	80	HA	$	41,375.49	$	3,310,039	
Highway Planting	1	LS	$	1,864,810.71	$	1,864,811	
Slope Protection - Stepping	1	LS	$	262,239.01	$	262,239	
Temporary Fence (Type ESA)	6,000	m	$	17.48	$	104,896	
Remove Fence	8,900	m	$	11.66	$	103,730	
Temporary Fence	5,200	m	$	27.97	$	145,455	
Fence (Type WM, Metal Post)	16,700	m	$	17.48	$	291,959	
Fence (Type CL 1.8)	2,800	m	$	58.28	$	163,171	
MBGR WB	12	EA	$	3,846.17	$	46,154	
MBGR Terminal End - Type XT	16	EA	$	5,244.78	$	83,916	
MBGR Buried Post End Anchor (Std Plan A77I2)	2	EA	$	1,165.51	$	2,331	
MBGR Wood Posts	305	m	$	110.72	$	33,771	
Temporary K-Rail	11,600	m	$	47.79	$	554,315	
Reset Temporary K-Rail	16,300	m	$	19.81	$	322,962	
Prepare Storm Water Pollution	1	LS	$	33,100.39	$	33,100	
Construction Site BMP's (SWDR 1.5%)	1	LS	$	8,374,165.58	$	8,374,166	
Misc Iron and Steel (Level Spreader)	25,610	LB	$	1.46	$	37,311	
Structural Concrete (Level Spreader)	220	CY	$	1,515.16	$	333,335	
RSP (1/4 Ton) (Level Spreader)	600	m3	$	145.69	$	87,413	
Sediment Traps	18	EA	$	11,655.07	$	209,791	
Hazardous Waste Mitigation Work	1	LS	$	699,304.02	$	699,304	
Progress Schedule (CPM)	1	LS	$	27,972.16	$	27,972	
Time Related Overhead	400	wday	$	1,748.26	$	699,304	
R/W Construction Contract Work	1	LS	$	80,419.96	$	80,420	
Resident Engineer Office Space	1	LS	$	123,543.71	$	123,544	
RSP (1/4 Ton)	980	m3	$	145.69	$	142,775	
RSP (backing)	410	m3	$	139.86	$	57,343	
RSP Fabric	990	m2	$	4.08	$	4,038	
Mainline Traffic Stage Detours	1	LS	$	3,759,924.59	$	3,759,925	
Box Culvert Stage Detours	1	LS	$	641,028.68	$	641,029	
						Subtotal Specialty Items:	$22,600,518

Section 5 Traffic Items

Description	Quantity	Unit	Unit Price	Item Cost	Section Cost
Highway Lighting (SR-29)	1	LS	$ 689,979.96	$ 689,980	
Traffic Stripe -100 mm (Thermoplastic)	84,500	m	$ 1.40	$ 118,182	
Traffic Stripe -200 mm (Thermoplastic)	7,400	m	$ 4.66	$ 34,499	
Pavement Marker (RetroReflective-Recessed)	4700	EA	$ 15.15	$ 71,212	
Pavement Marker (Retro-Reflective)	1600	EA	$ 15.15	$ 24,243	
Thermoplastic Traffic Markings	770	m2	$ 72.26	$ 55,641	
Construction Area Signs	1	LS	$ 316,435.07	$ 316,435	
Traffic Control Systems	1	LS	$ 1,489,517.55	$ 1,489,518	
Traffic Handling Plan	1	LS	$ 268,066.54	$ 268,067	
COZEEP	1	LS	$ 200,467.15	$ 200,467	
Traffic Signals	1	LS	$ 237,180.61	$ 237,181	
Maintain Traffic (flagging)	1	LS	$ 3,146,868.07	$ 3,146,868	
PCMS	4	EA	$ 30,303.17	$ 121,213	
Roadside Signs	1	LS	$ 233,101.34	$ 233,101	
				Subtotal Traffic Items:	$7,006,607

Subtotal Sections 1 thru 5: $74,694,272

Section 6 Minor items

Minor Items Markup	5.00%	$3,734,714
TOTAL SECTIONS 1 THRU 6		**$78,428,986**

Section 7 Roadway mobilization

Roadway Mobilization Ma	10.00%	**$7,842,899**

Section 8 Roadway Additions

Supplemental Work	10.00%	$7,842,899
Contingencies	20.00%	$15,685,797
Total roadway Additions:		**$23,528,696**

TOTAL ROADWAY ITEMS (SECTION 1 through 8) $109,800,580

II. STRUCTURES ITEMS:

STRUCTURE (1)

Bridge Name	Thurston Creek (Route 29, S-Line, Main)
Structure Type	CIP RC Box Culvert
Width (out to out) - (m)	200.35 ft
Length (begin to end bridge)-(m)	38.75 ft
Total Area - (m2)	7,764

Per DES Estimate Pactice Call **Structure 1** Estimate= **$1,376,000**

STRUCTURE (2)

Bridge Name	Thurston Creek (Route 29, SVO Line)
Structure Type	CIP RC Box Culvert
Width (out to out) - (m)	93.33
Length (begin to end bridge)-(m)	38.75 ft
Total Area - (m2)	3,617

Per DES Estimate Pactice Call **Structure 2** Estimate= **$693,000**

STRUCTURE (3)

Bridge Name	Thurston Creek (Route 281, T-Line, Main)
Structure Type	CIP RC Box Culvert
Width (out to out) - (m)	84.96 ft
Length (begin to end bridge)-(m)	64.50 ft
Total Area - (m2)	5,480

Per DES Estimate Pactice Call **Structure 3** Estimate= **$1,372,000**

STRUCTURE (4)

Bridge Name	Thurston Creek (Route 281, TAO Line)
Structure Type	CIP RC Box Culvert
Width (out to out) - (m)	35.50 ft
Length (begin to end bridge)-(m)	26.33 ft
Total Area - (m2)	935

Per DES Estimate Pactice Call **Structure 4** Estimate= **$321,000**

TOTAL, STRUCTURES 1-4 **$3,762,000**

TOTAL COST w/o R/W & ENVIRO MITIGATION: $113,600,000

Big E
2 of 2

Preliminary Cost Estimate

Type of Estimate :	PA&ED level for PR
Expense Authorization :	01-29811 & 01-29821
Program Code :	SHOPP-010 and STIPP (RIP & IIP)
Project Limits :	LAK 29 Segment 2C, PM 28.5/31.6
Description:	Upgrade 2-lane conventional to a 4-lane expressway
Scope :	Reconfiguration of highway
Alternative :	Preferred Alternative D, Segment 2C

		Current Cost		Escalated Cost
ROADWAY ITEMS	**$**	**61,393,000**	**$**	**65,765,716**
STRUCTURE ITEMS	**$**	**1,750,000**	**$**	**1,874,644**
SUBTOTAL CONSTRUCTION COST	**$**	**63,143,000**	**$**	**67,641,000**
RIGHT OF WAY	**$**	**13,305,000**	**$**	**14,416,000**
TOTAL CAPITAL OUTLAY COST	**$**	**76,448,000**	**$**	**82,057,000**
PR/ED SUPPORT	**$**		**$**	**-**
PS&E SUPPORT	**$**			**-**
RIGHT OF WAY SUPPORT	**$**			**-**
CONSTRUCTION SUPPORT	**$**			**-**
TOTAL CAPITAL OUTLAY SUPPORT COST*	**$**			**-**
TOTAL PROJECT COST	**$**	**-**	**$**	**-**

See Programming Sheets

If Project has been programmed enter Programmed Amount	$	-

	Month	/ Year
Date of Estimate (Month/Year)	11	2016
Estimated Date of Construction Start (Month/Year)	8	2019
Number of Construction Seasons	2	Seasons
	Month	/ Year
Estimated Mid-Point of Construction (Month/Year)	8	2020

Estimated Project Schedule

PID Approval	1/17/14
PA/ED Approval	12/1/16
PS&E	10/1/18
RTL	1/15/19
Begin Construction	8/3/19

Approval signatures are located on the summary estimate cover sheet

I. ROADWAY ITEMS SUMMARY

	Section		Cost
1	Earthwork	$	16,495,000
2	Pavement Structural Section	$	11,821,000
3	Drainage	$	3,238,000
4	Specialty Items	$	8,001,000
5	Environmental	$	-
6	Traffic Items	$	3,755,000
7	Detours	$	-
8	Minor Items	$	2,166,000
9	Roadway Mobilization	$	4,548,000
10	Supplemental Work	$	4,548,000
11	State Furnished	$	-
12	Contingencies	$	6,821,000
13	Overhead (TRO in Section 4)	$	-
	TOTAL ROADWAY ITEMS	**$**	**61,393,000**

Estimate Prepared By Mark Sobota 10/21/2016
Name and Title Date

Estimate Reviewed By Brian Simon 11/28/2016
Name and Title Date

Approval signatures are located on the summary estimate cover sheet

I. ROADWAY ITEMS

Section 1 Earthwork	Quantity	Unit	Unit Price	Item Cost	Section Cost
Roadway Excavation[1,2]	723,000	CY	$16.5	$11,929,500	
Rock Excavation (blast/ram)	102,200	CY	$25	$2,555,000	
Clearing and Grubbing	210	ACRE	$8,500	$1,785,000	
Obliterate AC Surfacing	2,550	SQYD	$2	$5,100	
Develop Water Supply	1	LS	$220,000	$220,000	
				Subtotal Earthwork:	**$16,495,000**

1 Roadway excavation quantity includes cost of embankment, wetland surcharge and excess material.

2 Does not include excess from other items

Section 2 Pavement Structural Section	Quantity	Unit	Unit Price	Item Cost
Rubberized Bonded Wearing Course	11,100	TON	$125	$1,387,500
Rubberized HMA	25,600	TON	$130	$3,328,000
HMA	47,100	TON	$110	$5,181,000
Tack Coat	100	TON	$550	$55,000
CL2 Agg Base	44,500	CY	$42	$1,869,000
			Subtotal Pavement Structural Section:	**$11,821,000**

Section 3 Drainage	Quantity	Unit	Unit Price	Item Cost
Culverts	1	LS	$1,565,000	$1,565,000
Ditches	1	LS	$870,000	$870,000
Underdrains	9,500	FT	$35	$332,500
Biostrips/Swales	1	LS	$470,000	$470,000
			Subtotal Drainage:	**$3,238,000**

Section 4 Specialty Items	Quantity	Unit	Unit Price	Item Cost
Erosion Control	1	LS	$1,710,000	$1,710,000
Visual Impact Mitigation	1	LS	$110,000	$110,000
Temp Fence (Type ESA)	14,765	LF	$4	$59,100
Remove Fence	22,375	LF	$3	$67,100
Termp Fence	21,660	LF	$12	$259,900
Fence - Type WM	37,300	LF	$10	$373,000
Fence Type CL	2,300	LF	$13	$29,900
Wildlife Crossing - Cable Railing	210	LF	$100	$21,000
Wildlife Crossing - Exclusion Fencing	11,300	LF	$23	$259,900
Wildlife Crossing - SSPP Arch	200	LF	$4,000	$800,000
Construction Site BMP's	1	LS	$2,837,500	$2,837,500
Haz Waste Mitigation	1	LS	$500,000	$500,000
Progress Schedule	1	LS	$20,000	$20,000
TRO	320	Wdays	$2,600	$832,000
R/W Contract Work	1	LS	$72,000	$72,000
RE Office	1	LS	$50,000	$50,000
			Subtotal Specialty Items:	**$8,001,000**

Section 5 Traffic Items	**Quantity**	**Unit**	**Unit Price**	**Item Cost**
Traffic Stripe 4"	145,341	LF	$1	$174,409
Traffic Stripe 8"	11,483	LF	$4	$45,932
Pavement Markers	1,154	LF	$13	$15,002
Thermo	2,800	SQFT	$6	$16,800
Construction Area Signs	1	LS	$25,000	$25,000
Traffic Control System	1	LS	$350,000	$350,000
Traffic Handling Plan	1	LS	$500,000	$500,000
Mainline Traffic Detours	1	LS	$1,328,000	$1,328,000
Temp Railing Type K	19,357	LF	$18	$348,426
Reset K Rail	34,679	LF	$12	$416,148
Maintain Traffic (Flagging)	1	LS	$500,000	$500,000
Traffic Count Station	1	LS	$35,000	$35,000
COZEEP	1	LS	$120,000	$120,000
Signs	1	LS	$30,000	$30,000
PCMS	1	LS	$25,000	$25,000

Subtotal Specialty Items: $3,755,000

TOTAL SECTIONS 1 through 5 $43,310,000

Section 6 Minor Items			**Item Cost**
	Subtotal Section 1 thru 5 x 5%	=	$2,166,000

TOTAL MINOR ITEMS: $2,166,000

Section 7 Roadway Mobilization			**Item Cost**
	Subtotal Section 1 thru 6 x 10%	=	$4,548,000

TOTAL ROADWAY MOBILIZATION: $4,548,000

Section 8 Roadway Additions			**Item Cost**
Supplemental Work	Subtotal Section 1 thru 6 x 10%	=	$4,548,000
Contingencies	Subtotal Section 1 thru 6 x 15%	=	$6,821,000

TOTAL ROADWAY ADDITIONS: $11,369,000

TOTAL ROADWAY ITEMS (SECTION 1 through 8) $61,393,000

II. STRUCTURES ITEMS

Structure Type	Retaining wall, Alt 1 (soil nail)
Wall #	TBD
Length (ft)	250 +/-
Max Height - (ft)	38 +/-
Total Area - (sqft)	7001
Footing Type (pile/spread)	NA
Cost Per ft^2	$154
Structure Cost Subtotal	
mobilization	10%
TRO	10%
contingency	25%
Number of Structures	1
Total Structure Cost	**$1,750,000**

TOTAL STRUCTURES ITEMS **$1,750,000**

III. RIGHT OF WAY ITEMS

A.	Total Acquistion Costs	$6,318,814
B.	Appraisal Fee Estimate	$115,000
C.	Mitigation Acquistion/Credits	$1,400,280
D.	Proj Dev Fees	$101,500
E.	Utility Relocation (State)	$5,031,000
F.	Relocations Assistance	$40,000
G.	Clearance/ Demolition	$275,000
H.	Title & Escrow	$23,000
I.	Total Estimated R/W	$13,304,594

TOTAL RIGHT OF WAY ITEMS **$13,305,000**

01-LAK-29
PM 23.6/31.6
01-2981U0
01 0000 0090

ATTACHMENT H
RIGHT OF WAY DATA SHEETS

State of California
Department of Transportation

Business, Transportation and Housing Agency

MEMORANDUM

Flex your power!
Be energy efficient!

To: MARK SOBOTA
Design Engineer
Department of Transportation

Attention: BRIAN SIMON
Project Engineer

Date: November 8, 2016

File: 01-LAK-29-PM 23.8/31.6
EFIS No.: 01 0000 0090
EA: 2981U
Alternate: D

From: KAREN E. HAWKINS
North Region Right of Way Assistant Manager,
Project Delivery
Eureka/Redding

Subject: CURRENT ESTIMATED RIGHT OF WAY COSTS

Project Description: In Lake County on Route 29 near Lower Lake from 0.2 KM north of Diener Drive to 0.9 KM north of the Junction of Route 175 (KP 38.3/50.8)

Alternate Description: Convert to Expressway (Updated Alternative D w/ Signalized Intersection)

We have completed an estimate of the right of way costs for the above referenced project based on information received from you on August 24, 2016 .

Right of Way Lead Time will require a minimum of 36 months after receipt of appraisal maps, utility conflict maps, environmental clearances (HMDD) and Certificate of Sufficiency (COS). A minimum of 36 months prior to certification will be required from submittal of the last map or revision. Shorter lead times may require additional support resources and may adversely affect delivery of Right of Way Certification.

Karen E Hawkins

KAREN E. HAWKINS
Assistant Chief
North Region Right of Way
EUREKA/REDDING

Attachments:
Right of Way Data Sheet

cc. Jaime Matteoli

State of California - Department of Transportation
RIGHT OF WAY DATASHEET

EA: 2981U
PROJECT NO.: 01 0000 0090
LOCATION: 01-LAK-29-PM 23.8/31.6
Description: Upgrade to 4 Lane Expressway In Lake County on Route 29 near Lower Lake from 0.2 KM north of Diener Drive to 0.9 KM north of the Junction of Route 175 (KP 38.3/50.8)
ALTERNATE: D
DATE: 11/8/2016
Datasheet Type: Annual Update

1. Right of Way Cost Estimate:

	Current Value Future Use	Escalation Rate	Escalated Value
A. Total Acquisition Cost	$10,491,720	5%	$11,624,472
B. Appraisal Fees Estimate	$245,000	N/A	$245,000
C. Mitigation Acquisition & Credits	$4,819,406	5%	$5,339,739
D. Project Development Permit Fees	$131,511	5%	$145,710
Subtotal	$15,687,637		$17,354,921
E. Utility Relocation (State's Share)	$17,991,000	5%	$19,933,422
(Owner's Share: $2,279,000)			
F. Relocation Assistance (RAP)	$80,000	5%	$88,637
G. Clearance/Demolition	$45,005	5%	$49,864
H. Title & Escrow	$49,000	5%	$54,290
I. Total Estimated Right of Way Cost	$33,852,642	**Rounded**	**$37,481,000** *
J. Construction Contract Work	$80,000		

2. Current Date of Right of Way Certification December 15, 2018

3. Parcel Data:

Type		Dual/Appr
X	0	
A	11	
B	36	
C	5	1
D	0	0
RR	0	
Total	**52**	
Excess	8	

Utilities	
U4 - 1	0
- 2	0
- 3	4
- 4	0
U5 - 7	3
- 8	0
- 9	4

Railroad	
C&M Agreement	0
Service Contract	0
Easements	0
Rights of Entry	0
Clauses	0

Areas:	
R/W	404.98 AC
TCE	12.96 AC
Excess	65.55 AC
Mitigation	114.54 Ac.

Mitigation	
Impacts	8
Parcels	4
Credits	1

Misc. R/W Work	
RAP Displacees	9
Clear/Demo	11
Permit to Enters	N/A
Condemnation	5
USA Involvement	No

4. **Provide a general description of the right of way and excess lands required (zoning, use, major improvements, critical or sensitive parcels, etc.).**

Impacted properties consist of rangeland, rural residential homesites, orchards, vineyards and commercial properties. Zoning is a combination of Agricultural (A), Rural Lands (RL), Rural Residential (RR), Commercial Highway (CH), Commercial Community (C2) and Planned Development Commercial (PDC).

5. **Are any properties acquired for this project expected to be rented, leased, or sold?**

Yes X No _____

Three excess land parcels have previously been acquired after owners submitted hardship applications (Parcel 11801 - Nordby, Parcel 11783 - Hutchinson, & Parcel 11784 - Smith).

6. **Are RAP displacements required?**

Yes X No _____

No. of single family 5 No. of business/nonprofit 2

No. of multi-family 0 No. of farms 1

Based on Draft/Final Relocation Impact Statement/Study dated October 26, 2016

X Sufficient replacement housing will be available without last resort housing.

_____ Sufficient replacement housing will not be available without last resort housing.

7. **Is there an effect on assessed valuation?**

Yes _____ No _____ Not Significant X

8. **Are there any items of Construction Contract Work?**

Yes X No _____

Due to scope of project CCW in some instances is likely. Per Project Design, $80,000 has been allocated. For datasheet purposes, agricultural fencing impacts have been included as damage payments to landowners (it is possible that a decision will be made to include agricultural fencing relocation as CCW during Regular RW - freeway fencing will be provided). The relocation of access has been included in the design for this Expressway project and therefore is also not identified as CCW.

9. **Are utility facilities or rights of way affected?**

Yes X No _____

Names of Utility Companies requiring verification only.

PG&E (gas), Lake County Special Districts (water/sewer, effluent pipeline), Mediacom (CATV)

Names of Utility Companies requiring involvements.

PG&E (electric distribution), PG&E (electric transmission), AT&T (communications), AT&T Legacy (trans-con fiber)

Additional information concerning Utility Involvement on this project.

As additional information becomes available, this estimate may need to be revised.

10. Are railroad facilities or rights of way affected?

Yes _____ No ___X___ Phase 4 Capital ___$0___

11. Are USA Lands or Rights Affected?

Yes _____ No ___X___ Phase 4 Capital ___$0___

Agencies Involved:

US Forest Service _____ BLM _____ Army Corps of Engineers _____

National Parks _____ BIA _____ Vetrans Administration _____

US Fish & Wildlife _____ GSA _____ _____

Rights or Permissions to acquire:

Easement _____ Special Use Permit _____ Courtesy Letter _____

Right of Way Grant _____ Cooperative Work Agreement _____ Cost Recovery _____

Mineral Agreement _____ Letter of Concurrence _____ Timber Sale _____

_____

12. Is an RE Office required for the project?

Yes ___X___ No _____

Type of RE Office

Modular ___X___ Move In _____

13. Were any previously unidentified sites with hazardous waste and/or material found?

Yes _____ None Evident ___X___

14. Are there material borrow and/or disposal sites required?

No _____ Optional ___X___ Manditory _____

3 potential sites have been identified for disposal. One site is the former Nordby property acquired by the Department after owners applied for an early hardship acquisition (RW Parcel 11801). The second site is already permitted and is currently an operational quarry. The third site is the CDF/CDC property likely to be acquired for construction.

15. Are there potential relinquishments and/or abandonments?

Yes ___X___ No _____

The Hwy 29 Expressway project deviates from the existing Hwy 29 in sections. The Hwy may be relinquished or abandoned in these locations.

16. Are there any existing and/or potential airspace sites?

Yes _____ No ___X___

17. What type of mitigation is required for the project?

Mitigation will be required for impacts to wetlands, vernal pools, waters of the US, riparian areas and oak woodlands. Acquisition costs per acre and mitigation ratios provided by Environmental. 2015 In-lieu Fee calculator used to determine cost estimate. Maintenance & Monitoring costs of Mitigation lands will be paid by Construction Phase 4. (Mitigation property will be deeded directly to authorized agency and never be in the State's name or in Real Property Services workload other than co-op reviews. SAR)

18. Is it anticipated that Caltrans will perform all Right of Way work?

Yes **X** No _____

19. Indicate the anticipated Right of Way schedule and lead time requirements.

Right of Way Lead Time will require a minimum of **36** months after we receive first appraisal maps, utility conflict maps, necessary environmental clearances and freeway agreements have been approved and obtained. Additionally a minimum of **36** months will be required after receiving the last appraisal map to Right of Way for certification.

20. Assumptions and limiting Conditions: (Check boxes that apply.)

- ☐ Mapping did not provide sufficient detail to determine the limits of the right of way required.
- ☐ Transportation facilities have not been sufficiently designed to determine the damages to any of the remainder parcels affected by the project.
- ☐ Additional right of way requirements are anticipated, but are not defined due to the preliminary nature of the early design requirements.
- ☐ Design will secure necessary encroachment permits from local agencies.
- ☐ Project permits are not required for the project.
- ☐ _____
- ☐ _____
- ☐ _____
- ☐ _____
- ☐ _____

Evaluation Prepared By:

Right of Way Kevin Waxman Date 11/8/16
KEVIN WAXMAN

Reviewed By

RW Project Coordinator _____ Date 11-9-16
SAM GENTLE

I have personally reviewed this Right of Way Data Sheet and all supporting information. I certify that the probable Highest and Best Use, estimated values, escalation rates and assumptions are reasonable and proper, subject to the limiting conditions set forth, and I find this Data Sheet to be complete and current.

Bob Close
BOB CLOSE
Senior Right of Way Agent
Project Delivery Branch
Eureka

11/9/16
Date

Karen E. Hawkins
KAREN E. HAWKINS
Assistant Chief
North Region Right of Way
Eureka/Redding

11/9/16
Date

State of California
Department of Transportation

Business, Transportation and Housing Agency

MEMORANDUM

Flex your power!
Be energy efficient!

To: MARK SOBOTA
Design Engineer
Department of Transportation

Attention: BRIAN SIMON
Project Engineer

Date: June 20, 2016

File: 01-LAK-29-PM 28.5/31.6
EFIS No.: 01 1400 0043
EA: 298110
Alternate: 2C Safety

From: KAREN E. HAWKINS
North Region Right of Way Assistant Chief,
Project Delivery
Eureka/Redding

Subject: CURRENT ESTIMATED RIGHT OF WAY COSTS

Project Description: In Lake County near Kelseyville from 0.6 mile north of the Junction of SR 29/281 to 0.6 mile north of the Junction of SR 29/175

Alternate Description: Widen conventional 2-lane highway SR 29 to a four-lane divided expressway with access control. Segment 2C of this project is approximately 3 miles long, beginning at Post Mile (PM) 28.5 and ending at PM 31.6. A system of frontage roads will be constructed to properties affected by access control.

We have completed an estimate of the right of way costs for the above referenced project based on information received from you on April 27, 2016 .

Right of Way Lead Time will require a minimum of 24 months after receipt of appraisal maps, utility conflict maps, environmental clearances (HMDD) and Certificate of Sufficiency (COS). A minimum of 18 months prior to certification will be required from submittal of the last map or revision. Shorter lead times may require additional support resources and may adversely affect delivery of Right of Way Certification.

Karen E Hawkins

KAREN E. HAWKINS
Assistant Chief
North Region Right of Way
EUREKA/REDDING

Attachments:
Right of Way Data Sheet

cc. Jamie Matteoli

State of California - Department of Transportation
RIGHT OF WAY DATASHEET

EA: 298110
PROJECT NO.: 01 1400 0043
LOCATION: 01-LAK-29-PM 28.5/31.6
Description: Improve curve and upgrade shoulders In Lake County near Kelseyville from 0.6 mile north of the Junction of SR 29/281 to 0.6 mile north of the Junction of SR 29/175

ALTERNATE: 2C Safety
DATE: 6/20/2016
Datasheet Type: Revision

1. Right of Way Cost Estimate:

	Current Value Future Use	Escalation Rate	Escalated Value
A. Total Acquisition Cost	$6,318,814	5%	$6,851,056
B. Appraisal Fees Estimate	$115,000	N/A	$115,000
C. Mitigation Acquisition & Credits	$1,400,280	5%	$1,518,227
D. Project Development Permit Fees	$101,500	5%	$110,049
Subtotal	$7,935,594		$8,594,333
E. Utility Relocation (State's Share)	$5,031,000	5%	$5,454,768
(Owner's Share: $1,084,000)			
F. Relocation Assistance (RAP)	$40,000	5%	$43,369
G. Clearance/Demolition	$275,000	5%	$298,164
H. Title & Escrow	$23,000	5%	$24,937
I. Total Estimated Right of Way Cost	$13,304,594	**Rounded**	**$14,416,000** *
J. Construction Contract Work	$80,000		

2. Current Date of Right of Way Certification February 15, 2018

3. Parcel Data:

Type		Dual/Appr	Utilities		Railroad	
X	0		U4 - 1	0	C&M Agreement	0
A	8		- 2	0	Service Contract	0
B	14		- 3	4	Easements	0
C	4	0	- 4	0	Rights of Entry	0
D	0	0	U5 - 7	3	Clauses	0
RR	0		- 8	0		
Total	**26**		- 9	4		

Excess 4

Areas:		Mitigation		Misc. R/W Work	
R/W	194.7 AC	Impacts	4	RAP Displacees	9
TCE	N/A	Parcels	0	Clear/Demo	7
Excess	27.77 AC	Credits	0	Permit to Enters	N/A
Mitigation	35.57 Ac.			Condemnation	6
				USA Involvement	No

4. Provide a general description of the right of way and excess lands required (zoning, use, major improvements, critical or sensitive parcels, etc.).

Impacted properties consist of rangeland, rural residential homesites, orchards, vineyards and commercial properties. Zoning is a combination of Agricultural (A), Rural Lands (RL), Rural Residential (RR), Commercial Highway (CH), Commercial Community (C2) and Planned Development Commercial (PDC). 3 CBS ODA Signs will require removal.

5. Are any properties acquired for this project expected to be rented, leased, or sold?

Yes **X** No _____

Three excess land parcels have previously been acquired after owners submitted hardship applications (Parcel 11801 - Nordby, Parcel 11783 - Hutchinson, & Parcel 11784 Smith).

6. Are RAP displacements required?

Yes **X** No _____

No. of single family 2 No. of business/nonprofit 0

No. of multi-family 0 No. of farms 0

Based on Draft/Final Relocation Impact Statement/Study dated February 20, 2014

X Sufficient replacement housing will be available without last resort housing.

_____ Sufficient replacement housing will not be available without last resort housing.

7. Is there an effect on assessed valuation?

Yes _____ No _____ Not Significant **X**

8. Are there any items of Construction Contract Work?

Yes **X** No _____

CCW has not been estimated in this datasheet for individual parcels. For datasheet purposes, agricultural fencing impacts have been included as damage payments to landowners (it is possible that a decision will be made to include agricultural fencing relocation as CCW by the Contractor during Regular RW - freeway fencing will be provided). The relocation of access has been included in the design for this Expressway project and therefore is also not included as CCW. Per Design, $80,000 is allocated for unforseen CCW costs.

9. Are utility facilities or rights of way affected?

Yes **X** No _____

Names of Utility Companies requiring verification only.

Lake County Special Districts (water/sewer, effluent pipeline), Mediacom (CATV), PG&E (gas)

Names of Utility Companies requiring involvements.

AT&T (communications), AT&T Legacy (transcontinental fiber), PG&E (electric distribution), PG&E (electric transmission)

Additional information concerning Utility Involvement on this project.

As additional information becomes available, this estimate may need to be revised.

10. Are railroad facilities or rights of way affected?

Yes _____ No ___X___ Phase 4 Capital ___$0___

11. Are USA Lands or Rights Affected?

Yes _____ No ___X___ Phase 4 Capital ___$0___

Agencies Involved:

US Forest Service _____ BLM _____ Army Corps of Engineers _____

National Parks _____ BIA _____ Vetrans Administration _____

US Fish & Wildlife _____ GSA _____ _____

Rights or Permissions to acquire:

Easement _____ Special Use Permit _____ Courtesy Letter _____

Right of Way Grant _____ Cooperative Work Agreement _____ Cost Recovery _____

Mineral Agreement _____ Letter of Concurrence _____ Timber Sale _____

_____

12. Is an RE Office required for the project?

Yes ___X___ No _____

Type of RE Office

Modular ___X___ Move In _____

13. Were any previously unidentified sites with hazardous waste and/or material found?

Yes _____ None Evident ___X___

14. Are there material borrow and/or disposal sites required?

No _____ Optional ___X___ Manditory _____

3 potential sites have been identified for disposal. One site is the former Nordby property acquired by the Department after owners applied for an early hardship acquisition (RW Parcel 11801). The second site is already permitted and is currently an operational quarry. The third site is the CDF/CDC property likely to be acquired for construction.

15. Are there potential relinquishments and/or abandonments?

Yes ___X___ No _____

The Hwy 29 Expressway project deviates from the existing Hwy 29 in sections. The Hwy may be relinquished or abandoned in these locations.

16. Are there any existing and/or potential airspace sites?

Yes _____ No ___X___

17. What type of mitigation is required for the project?

Mitigation will be required for impacts to wetlands, vernal pools, waters of the US and oak woodlands. Acquisition costs per acre and mitigation ratios provided by Environmental. Wetlands impact area for project is 5.5 acres, however 3.2 acres of credits were purchased in FY 15/16 so only 2.3 acres remain to be purchased to satisfy Resource Agency requirement. 401 Permit Fee includes $90,000 application fee, $1,200 discharge fee and $300 post construction fee.

18. Is it anticipated that Caltrans will perform all Right of Way work?

Yes **X** No _____

19. Indicate the anticipated Right of Way schedule and lead time requirements.

Right of Way Lead Time will require a minimum of **24** months after we receive first appraisal maps, utility conflict maps, necessary environmental clearances and freeway agreements have been approved and obtained. Additionally a minimum of **18** months will be required after receiving the last appraisal map to Right of Way for certification.

20. Assumptions and limiting Conditions: (Check boxes that apply.)

- ☐ Mapping did not provide sufficient detail to determine the limits of the right of way required.
- ☐ Transportation facilities have not been sufficiently designed to determine the damages to any of the remainder parcels affected by the project.
- ☐ Additional right of way requirements are anticipated, but are not defined due to the preliminary nature of the early design requirements.
- ☐ Design will secure necessary encroachment permits from local agencies.
- ☐ Project permits are not required for the project.
- ☐ _____
- ☐ _____
- ☐ _____
- ☐ _____
- ☐ _____

Evaluation Prepared By:

Right of Way Kevin Waxman Date 8/30/16
KEVIN WAXMAN

Reviewed By

RW Project Coordinator _____ Date 8-31-16
SAM GENTLE

I have personally reviewed this Right of Way Data Sheet and all supporting information. I certify that the probable Highest and Best Use, estimated values, escalation rates and assumptions are reasonable and proper, subject to the limiting conditions set forth, and I find this Data Sheet to be complete and current.

Robert C Close
ROBERT CLOSE
Senior Right of Way Agent
Project Delivery Branch
Eureka

8/31/16
Date

Karen E Hawkins
KAREN E. HAWKINS
Assistant Chief
North Region Right of Way
Eureka/Redding

9/1/16
Date

01-LAK-29
PM 23.6/31.6
01-2981U0
01 0000 0090

ATTACHMENT I
PRELIMINARY GEOTECHNICAL REPORT

January 8, 2003 PGR from Les Whitmore to Brent Meyer

(01_08_03_Geotec_report_attach2_revised_slope_req.pdf)

- We recommend the use of 1(V): 2 (H) or flatter fill slopes and 1 (V):l.5 (H) or flatter cut slopes.
- Where retaining walls are necessary, we recommend the consideration of soil-nail walls for. cut areas. Standard Plan Crib Walls and Mechanically Stabilized Earth (MSE) Walls may be considered for fill areas. Standard Plan Type 1 Concrete Cantilever Walls may be appropriate for cut and fill areas. Experience has shown that MSE and Soil Nail Walls can be up to 20 percent less expensive than other types of retaining walls.
- If the expressway option is ultimately selected as the design alternative, our office should be contacted to conduct site-specific permeability tests and groundwater assessment.
- Existing cut sections appear to be rippable.
- Our office should also conduct a subsurface investigation of the retaining wall sites once the project layout is set.
- A follow-up Preliminary Geotechnical Report should be prepared by our office once the ultimate alignment has been selected.

July 25, 2006 Updated from Benjamin Barnes to Steve Hughes

(07_25_06_Geotec_Report_attach1_revised_slope_req.pdf)

- This report provides supplemental recommendations to the PGR dated January 8, 2003 written by this Office.
- As this is a preliminary geotechnical evaluation, subsurface explorations and related laboratory analyses were not performed. The purpose of this report is to assist planners, project studies personnel, and environmental personnel. Information from this report will be included in the Geotechnical Design Report (GDR).

Proposed Slope Ratios

Permanent cut and fill slopes less than a height of 3m are 1:4 (V:H) or flatter
Permanent cut and fill slopes greater than 3m are 1:2 (V:H).
Temporary slopes for construction and traffic staging will be 1:1 or flatter.

…it is the opinion of this office that the permanent and temporary cut and fill slopes may be constructed at the proposed slope ratios.

- **Fill sections in wetland areas**
  Measures to mitigate settlement issues will most likely be needed, and will be determined by subsurface investigation: If the subsurface investigations for the GDR reveal soils prone to settlement, this Office will make the appropriate recommendations, which may include controlling the rate of embankment construction, preloading, and/or specifying a settlement period.

- **Staged Construction**
  Subsurface investigation of the existing slope will be performed in support of the GDR to determine rippability and slope stability.

- **Bearing capacity for culverts**

Subsurface investigation will be performed at or near the culvert locations as part of a GDR to assess bearing capacity.

- **Rippability in cut sections**
  Seismic refraction testing will be performed as part of a GDR to assess rippability.

- **Retaining Wall**
  Subsurface investigations will be performed at the location of the retaining wall to determine the appropriate foundations type.

- **Construction Considerations**
  Additional information addressing the in-situ moisture and compaction characteristics of the fill material will be presented in the GDR. It will also be necessary to evaluate any imported soil characteristics prior to construction.

  Test results of the corrosion potential will be presented in the GDR.

- **Proposed Future Considerations**
  To confirm the subsurface conditions assumed herein, a subsurface exploration and soil testing program will be employed during the project PS&E phase. Future investigation work will include seismic refraction testing, geotechnical drilling, sampling, laboratory testing, and data analysis in support of the GDR.

March 24, 2008 Request for comments on revised slopes from E Cramer to B Barnes (same went to Ron Flory)

(032108_Geotech_revised_slope_req_SL.doc)

As a result of cost reduction ideas proposed by the recently completed Value Analysis team, we are further investigating the feasibility of making the following changes to the project to reduce cost:

Option 1) Steepen cut slopes under 3 meters in height to a slope ratio of 1:1.5 from the currently designed 1:4 slope ratio.
Option 2) Steepen cut slope greater than 3 meters in height to a slope ratio of 1:1.5 from the currently designed 1:2 slope ratio.
Option 3) Flatten fill slopes greater than 3 meters in height to a slope ratio of 1:4 from the currently designed 1:2 slope ratio where it is environmentally and cost effectively practical to do so as to make use of excess excavated material.

April 11, 2008 Geotechnical Response to Value Analysis Comments to E Cramer from B Barnes

(20080411-Response to VA Comments.pdf)

A final geotechnical analysis will be needed to validate the comments, and incorporated into the Final Geotechnical Report.
As these recommendations are based upon preliminary data, a final geotechnical analysis should be performed for verification and in support of the Final Geotechnical Report.

@ Geotech

State of California
Department of Transportation

Business, Transportation and Housing Agency

Memorandum

Flex your power!
Be energy efficient!

To: MR. EDWARD CRAMER
Project Engineer
North Region - Design E1

Date: April 11, 2008

File: 01-LAK-29 KP 38.3/50.8
(PM 23.8/31.6)
01-2981U0

From: **DEPARTMENT OF TRANSPORTATION**
DIVISION OF ENGINEERING SERVICES
GEOTECHNICAL SERVICES – MS 5

Completed Final Recommendation

Subject: Geotechnical Response to Value Analysis Comments

Introduction

Per your request, we are providing geotechnical comments on revised slope proposals for the Lake 29 Expressway project in Lake County, California. As a result of cost reduction ideas proposed by the recently completed Value Analysis team, Design is further investigating the feasibility of making the following changes to the project to reduce cost:

Option 1: Steepen cut slopes under 3 meters in height to a slope ratio of 1:1.5 (V:H) from the currently designed 1:4 (V:H) slope ratio.
Option 2: Steepen cut slopes over 3 meters in height to a slope ratio of 1:1.5 (V:H) from the currently designed 1:2 (V:H) slope ratio.
Option 3: Flatten fill slopes greater than 3 meters in height to a slope ratio of 1:4 (V:H) from the currently designed 1:2 (V:H) slope ratio where it is environmentally and cost effectively practical to do so as to make use of excess excavated material.

The following comments are based upon a preliminary review of the project which include a site visit, visual inspection of the exiting cut slopes and general soil conditions, and a review of published geotechnical data. A final geotechnical analysis will be needed to validate the comments, and incorporated into the Final Geotechnical Report.

Option 1: The nature of the material in the existing cuts for cut slopes under 3 meters in height are such that they may experience some minor erosion and rockfall issues. However, due to the small height of the cuts, they should perform adequately at the proposed 1:1.5 (V:H) slope ratio.

Option 2: Due to the nature of the material in the existing cuts (silt and sand with rock debris, intensely weathered, highly fractured obsidian), slope ratios of 1:1.5 (V:H) for cuts greater than 3 meters may be prone to stability and rockfall issues. Slope ratios of 1:1.5 (V:H) are feasible for these cuts, however, based upon the preliminary data available, this Office feels there would be some risk involved. As these recommendations are based upon preliminary data, a final geotechnical analysis should be performed for verification and in support of the Final Geotechnical Report.

Option 3: Flattening the fill slopes greater than 3 meters is acceptable as it would provide increased stability to the fills.

If there are any questions or comments regarding the comments in this report, please contact Ben Barnes at 916-227-1039.

Benjamin Barnes

REGISTERED PROFESSIONAL ENGINEER
BENJAMIN M. BARNES
No. 66090
Exp. 6/30/2008
CIVIL
STATE OF CALIFORNIA

BENJAMIN BARNES, P.E.
Transportation Engineer
Geotechnical Design - North

c: Qiang Huang
GDN File

01-LAK-29
PM 23.6/31.6
01-2981U0
01 0000 0090

ATTACHMENT J
TRANSPORTATION MANAGEMENT PLAN

TRANSPORTATION MANAGEMENT PLAN

To: Valency Langtry
Project Engineer

Date: 23 February 2007
File: LAK-29 PM 23.6/31.6
EA: 01-2981U0
Lake 29 Expressway

From: Troy Arseneau
Chief, Office of Traffic Operations
District 1

Project Information

Location:	In Lake County, on State Route 29, near Lower Lake from 0.1 miles north of Diener Drive to 0.6 miles north of the State Route 175 junction.
Type of Work:	Upgrade roadway from a two-lane conventional highway to a four-lane expressway.
Anticipated Traffic Control:	Lane reduction. Shoulder closure. One-way reversible traffic control. Full closure without detour. Full closure with detour.
Estimated Maximum Delay:	15 minutes maximum. Refer to Table 1 for the delay corresponding to one-way reversible traffic control.
Peak Hour Traffic Volumes	710-870 vph (2004 Traffic Volumes).
Lane Closure Charts Included:	Yes.
Number of Working Days:	400 days.
Next Major Milestone and Date:	PA&ED – January/2009
RTL Date:	August/2011
District Traffic Manager/ TMP Manager:	Troy Arseneau (707) 445-6377

Table 1: Maximum Lane Closure Length and Delay for One-way Reversible Traffic Control

Surface Type	*Number of Closures in the Project Limits*	*Maximum Length (ft)*	*Delay (min)*
Dirt	1	3200	15
	2	1000	5
Paved	1	3200	15
	2	1500	5

Anticipated Traffic Impacts

Significant traffic impacts are not anticipated provided that the following recommendations are incorporated into the project. In conformance with Deputy Directive-60, District Lane Closure Review Committee approval is not required for projects with anticipated traffic delay less than 30 minutes.

An updated Transportation Management Plan should be requested prior to 60% complete.

Hours of Work

- See Lane Closure Chart #1 for work hour restrictions regarding one-way reversible control.
- The full width of the traveled way shall be open for use by public traffic on Saturdays, Sundays, designated legal holidays and the day preceding designated legal holidays, after 3:00 p.m. on Fridays (unless otherwise noted), and when construction operations are not actively in progress. If a legal holiday falls on a Monday the full width of the traveled way shall be open on the preceding Friday.

Public Notice

- Upon receipt of notice that the traveled way for a direction of travel will be narrowed to less than 15 ft, the Resident Engineer shall promptly notify the District Permits Engineer.
- The District Public Information Office, (707) 445-6444, shall be contacted two weeks in advance of the start of construction.

- Coordinate with County, City, and local agencies (including Native American agencies) for closure schedules on local roads affected by construction activities.

- Any emergency service agency whose ability to respond to incidents will be affected by any lane closure must be notified prior to that closure.

- The Resident Engineer should provide information to businesses before and during project work that impacts business.

- Electrical Maintenance shall be contacted 5 days in advance if any signal loop detectors will be damaged by construction activities, if signals will be put on all red flash operation or shut down. Signal Operations shall be notified if any temporary signal timing adjustments are needed.

Staged Construction

- It is anticipated that during the construction of this expressway staged construction will be required.

- Staged construction plans should address access for trucks to the job site from Northbound/ Southbound Route 29.

- A Constructability Review Committee should be utilized during the development of staged construction plans.

Traffic Control

- Work that requires a lane closure shall be in conformance with the Caltrans Standard Plan T-10, "TRAFFIC CONTROL SYSTEM FOR LANE CLOSURE ON FREEWAYS AND EXPRESSWAYS."

- Work that occurs within 15 ft of the traveled way shall require a shoulder closure in conformance with the Caltrans Standard Plan T-10, "TRAFFIC CONTROL SYSTEM FOR LANE CLOSURE ON FREEWAYS AND EXPRESSWAYS."

- Work that requires a lane closure shall be in conformance with the Caltrans Standard Plan T-11, "TRAFFIC CONTROL SYSTEM FOR LANE CLOSURE ON MULTILANE CONVENTIONAL HIGHWAYS."

- One-way traffic control shall be in conformance with the Caltrans Standard Plan T-13, "TRAFFIC CONTROL SYSTEM FOR LANE CLOSURE ON TWO LANE CONVENTIONAL HIGHWAYS."

- A minimum of one paved traffic lane, not less than 12 ft wide with 4 ft contiguous paved shoulder, shall be open for use by public traffic.
- Refer to Table 1 for the maximum closure length of one-way reversible traffic control.
- During one-way traffic control, additional advance flaggers will be required. All flaggers shall have continuous radio contact with personnel in the work area.

- A shoulder closure consisting of at least one Shoulder Work Ahead advance warning sign and channelizing devices shall be used when work occurs within 8 ft of the edge of traveled way. Channelizing devices shall be placed 200 ft in advance of, and adjacent to the work zone with a maximum distance of 50 ft between channelizers.

- A shoulder closure consisting of at least one Shoulder Work Ahead advance warning sign shall be used when work occurs more than 8 ft but less than 15 ft from the traveled way.

- During construction operations, the road may be closed and public traffic stopped for periods not to exceed 5 minutes. After each closure, all accumulated traffic shall be allowed to pass through the work zone before another closure is made. Road closure shall in conformance with the MUTCD sec. 6H-13 and MUTCD California Supplement 6H-13.

- Work that requires closing half the roadway shall be in conformance with the Caltrans Standard Plan T-12, "TRAFFIC CONTROL SYSTEM FOR LANE CLOSURE ON MULTILANE CONVENTIONAL HIGHWAYS."
  - A minimum of one paved traffic lane in each direction of travel, not less than 12 ft wide with 4 ft contiguous paved shoulder, shall be open for use by public traffic.

- A maximum of two concurrent lane closures are permitted for each corridor on a State Route. The closures shall be separated by a minimum of 5 miles.

- A minimum of one PCMS in advance of both ends of the construction site shall be required in order to notify the public of the closures related to this project.

- Access to side roads and residences should be maintained at all times. When work or traffic queues extend through an intersection, additional traffic control will be required at the intersection.

- If traffic is required to drive on any unpaved section of road it must be well maintained and sufficiently compacted.

- If traffic is to be placed on unpaved surfaces over night, advanced flashing beacons on the advance signing as shown in Standard Plan T-13 shall be required. Flashing beacons on all three advance signs should be required where possible. In siting flashing beacons, care should be taken to avoid impacting inhabited dwellings with the light.

- Work shall be coordinated with the local busing system (including school buses and public systems) to minimize impact on their bus schedules. The public system is Lake Transit at 707-263-3334, and the school system is Lake County Office of Education at 707-262-4100.

- COZEEP is recommended for this project based on risk factors associated with this project and the COZEEP Guidelines (CPB 99-6). The associated risk factors are: lane closure with one-way control, workers exposed to traffic, end of queue management, speed management, and significant truck volumes.

- The following projects are anticipated to have closures near this project and should be included in SSP 07-850: *EA 01-47200, EA 01-45261, and EA 01-39850.*

Signal System Requirements (Possibly at tie-ins)

- A traffic-actuated signal system may be used to provide one-way control during construction, provided the signal controller location can be such that the distance between the detector loops and the signal controller is 1000 feet or less.

- Electrical Maintenance (825-0590) shall be contacted 15 days in advance of picking up State-furnished Traffic Signal Controller Assemblies, and 5 days in advance of the preliminary field test of the signal.

- Each signal system shall be thoroughly and satisfactorily tested by the contractor prior to scheduling turn-on.

- The Temporary Signal System shall provide an adequate parking location for a signal-maintenance vehicle. This pull-off location will allow proper access of the signal controller and the generator.

- The time of day of the initial turn-on shall be prior to 1:00 p.m. The Initial turn-on shall not be allowed to take place on Fridays, Saturdays, Sundays, designated legal holidays and the day preceding designated legal holidays.

- Any loop detectors that are damaged by the Contractor's operations shall be replaced within 24 hours.

- Traffic signal system shutdowns shall be limited to periods allowed for lane closures listed or specified in "Maintaining Traffic" of these special provisions.

- Traffic Electrical (445-6338) and Electrical Maintenance (825-0590) shall be contacted 10 days in advance of each of the anticipated traffic signal turn-on.

Contingency Plan

The contractor shall prepare a contingency plan for reopening closures to public traffic. The Contractor shall submit the contingency plan for a given operation to the Engineer within one working day of the Engineer's request. Contingencies for unanticipated delays, emergencies, etc. shall be coordinated between the RE and the Contractor.

Approval

Approved by:

Transportation Management Plan Manager

TAA/jnl

CC: 1)TAArseneau, 2)JCandalot
1)RMMartinelli, 2) MABrady, 3)File
BTFinck
SHughes
HLQuintrell
RLingford

Chart No. 1
Lane Requirements for One-way Reversible Traffic Control

Location: LAK-29-23.6 thru 31.6

	a.m.												p.m.												
FROM HOUR TO HOUR	12	1	2	3	4	5	6	7	8	9	10	11	12	1	2	3	4	5	6	7	8	9	10	11	12
Mondays through Thursdays	1	1	1	1	1	1	1														1	1	1	1	
Fridays	1	1	1	1	1	1	1																		
Saturdays																									
Sundays																									
Day before designated legal holiday																									
Designated legal holidays																									

Legend:

1	A minimum of one paved traffic lane, not less than 12 ft wide with 4 ft contiguous paved shoulder, shall be open for use by public traffic. The maximum lane closure length is described in Table 1.
	No closures allowed.

- The full width of the traveled way shall be open for use by public traffic on Saturdays, Sundays, designated legal holidays and the day preceding designated legal holidays, after 7:00 a.m. on Fridays, and when construction operations are not actively in progress.
- If a legal holiday falls on a Monday, the full width of the traveled way shall be open on the preceding Friday.
- No work shall take place the day preceding a 3-day weekend.

01-LAK-29
PM 23.6/31.6
01-2981U0
01 0000 0090

ATTACHMENT K
PRELIMINARY MATERIALS RECOMMENDATION

State of California
DEPARTMENT OF TRANSPORTATION

California State Transportation Agency

Memorandum

Serious drought.
Help save water!

To: Mark Sobota, Chief
Design E1

Date: September 29, 2016

File: 01-LAK-29
PM 28.5/31.6
EA: 01-298110
EFIS: 0114000043
Lake 29 Expressway
Segment 2C

Attn: Brian Simon
Project Engineer, Design E1

From: Wesley D. Johnson
Materials Engineering
Department of Transportation – North Region

Subject: **Supplemental Materials Recommendation #1**

To meet your request to explore alternatives to the previously recommended 40 year structural section design, the following is provided. In consultation with Headquarters Office of Asphalt Pavement, this effort explored the use of the Mechanistic Empirical (ME) roadway section design process. The nascent ME design process has been tested and implemented on a limited basis for projects utilizing design life greater than 20 years and with traffic index (TI) of 15.0 or greater. With concurrence of the Office of Asphalt Pavement, the ME design process was approved for use on this project's 40 year design in light of the relatively low 40 year traffic index value of 10.0. Additionally, an alternative is given for substituting cement treated aggregate base (CTB) for a portion of the hot mix asphalt in the empirical 40 year design as outlined in the Highway Design Manual section 633.1(3). This CTB substitution applies to the traveled way only as the shoulders and other structural sections are comparatively too thin to show a beneficial gain from using CTB. Also, the previous materials recommendation divided the project limits into three distinct

REGISTERED PROFESSIONAL ENGINEER
WESLEY D. JOHNSON
C66006
EXP. 6/30/18
CIVIL
STATE OF CALIFORNIA

Wesley D. Johnson

soils regions based on results of soils testing at the surface of the prior alignment alternative. With the further development of cut and fill profile, this recommendation considers final subgrade native soils to be grouped into two types as previously tested soils with low R-values will be excavated along the new alignment. Adjustments to the stationing for these section recommendations are included. This supplemental materials recommendation supersedes and replaces the previous materials recommendation dated March 24, 2016.

As this project proposes to replace the existing alignment with new alignment, international roughness index (IRI) values of the existing roadway are not provided in this report. For appropriate Life Cycle Cost Analysis (LCCA) as outlined in the Highway Design Manual, Section 619.1 *Life-Cycle Cost Analysis*, this recommendation includes 20 year and 40 year options for Rubberized Hot Mix Asphalt with Hot Mix Asphalt (RHMA/ HMA) driving surface. The 40 year empirical HMA design includes special enhancements per HDM Section 633.1(3) and these enhancements shall be considered in the LCCA.

Empirical Roadway Structural Section Design

At present, roadway structural section design is performed using the empirical gravel equivalent method as outlined in Section 600 of the Highway Design Manual (HDM). Using this method has traditionally produced conservative results in part due to the fact that this method was based on a determination of asphalt binder grade stiffness which subsequently has been replaced with the performance grading (PG) system for asphalt binder selection. Using the PG asphalt binder system in the empirical roadway design process results in pavements showing greater flexibility hence less long-term distress if properly constructed. Using the empirical roadway design method results in roadway structure that is conservatively thicker for the expected traffic loading. This added thickness somewhat mitigates construction variability and variability in sub surface conditions.

Mechanistic – Empirical (ME) Roadway Structural Section Design

The ME design process iteratively evaluates various combinations of hot mix materials placed over bases and sub-bases for performance criteria such as rutting, cracking, and smoothness. Moduli of stiffness are generated for each of the proposed structure materials as well as stiffness modulus for the native sub-grade soil type. The simulation is run for expected axle loading for the time period exceeding 20 years and variable factors such as weather (time of year) and construction placement thicknesses are considered by the model. Reliability percentage factors are generated for rutting, cracking, and overall performance.

Generally, reliability factors greater than 95% are acceptable and reliability factors for the proposed ME design structural section options listed below exceeded 95%.

Existing Structural Section

For the portion of the roadway that is to remain in place the following data was determined from a review of the Department's ground penetrating radar database (iGPR) and a review of the Department's database of project history files: Document Retrieval System (DRS). The north bound lane consists of 0.90 feet to 1.45 feet of HMA over 0.45 feet to 1.10 feet of aggregate base. The upper layer consists of 0.10 feet of RHMA-O, placed in 2007 under EA 01-398504.

Rubberized HMA

Following the guidelines in the *Crumb Rubber Usage in Hot Mix Asphalt Pavements* memo signed in February 2015 by K. Sutliff and S. Takigawa, rubberized hot mix asphalt (RHMA) is included in the structural section recommendation as all projects with estimated HMA quantity greater than 1,000 tons shall include RHMA.

Expansive soils

The geology of this project's location has the potential of expansive soils at the native subgrade. Native soils found to be expansive and used for subgrade whether in situ or imported as fill, should be treated with Portland cement for stability to a depth of 1.0 foot below the subgrade. Expansive soils determination is pending further review by the Geotechnical branch.

Overlay Existing, PM 30.1-30.3 and 30.6-30.8

For areas of existing roadway to remain in place as frontage road, the following repair work and overlay is recommended. Cold plane and remove 0.10 feet of the existing RHMA-O. Upon completion of the cold plane work, conduct a thorough inspection to locate areas of severe pavement failure identified by rutting greater than 1/2 inch and/or loose spalling pavement. Dig out and repair the localized failed areas to a depth of 0.33 feet (mill & fill with HMA-A) and seal all cracks wider than 1/4 inch by the rout and seal method. After cold planing the existing surface course, repair of the dig outs, and crack seal work; overlay the roadway from edge of pavement to edge of pavement with 0.20 feet of RHMA-G.

Notes:

• Where work occurs to widen the existing roadway (Cul-de-sac), the overlay recommended above can compose a portion for the recommended structural section thickness listed below for Frontage road.

• Routing Cracks: Rout cracks 1/4 inch wide and wider. The width of the routing should be 1/4 inch wider than the crack width. The depth should be equal to the width of the routing plus 1/4 inch. In order to alleviate the potential bump in the overlay from the crack sealant, leave the crack sealant 1/4 inch below grade to allow for expansion. Please see Attachment "A" for details.

Structural Sections, 40 Year Design, Mechanistic-Empirical Method

The following structural section alternatives were generated using the Department's software: "CalME" version 2.0 and the summary reports including reliability factors for each location are given as Attachment "B." These 40 year structural section alternatives were generated assuming groundwater intrusion, delamination of the surface layer at 1,000,000 ESALs, and opening to traffic at the end of the construction season (November).

Traveled Way and Shoulder "STS" 100+00 to "C" 205+75

RBWC-G	RHMA-G	HMA-A	AB (CL-2)
0.10'	0.20'	0.35'	0.50'
Assumes placement over native subgrade type: "GM."			

Traveled Way and Shoulder "C" 205+75 to "NTS" 116+87.5 and to "NTN" 214+96.4

RBWC-G	RHMA-G	HMA-A	AB (CL-2)
0.10'	0.20'	0.65'	0.50'
Assumes placement over native subgrade type: "ML."			

Structural Sections, 20 Year Design, Empirical Method

Traveled Way (20 year)

Based on noted R-values and expected conditions at excavated subgrade; and, a 20 year a Traffic Index which was provided by the Office of Traffic Forecasting and Modeling, the

following structural section strategies are recommended for traveled way. Each strategy is structurally equivalent.

Traveled Way "STS" 100+00 to "C" 205+75

R = **50**	TI_{20} = **9.5**				
Strategy #	RHMA-G	HMA-A	AB (Cl-2)	SEG	AS (Cl-2)
1	0.20'	0.30'	0.60'	- - - -	- - - -
2	0.20'	0.60'	- - - -	- - - -	- - - -

Traveled Way "C" 205+75 to "NTS" 116+87.5 and to "NTN" 214+96.4

R = **20** (15)	TI_{20} = **9.5**				
Strategy #	RHMA-G	HMA-A	AB (Cl-2)	SEG	AS (Cl-2)
1	0.20'	0.30'	0.75'	YES	0.75'
2	0.20'	0.30'	1.40'	YES	- - - -
3	0.20'	0.90'	- - - -	YES	- - - -

Shoulder (20 year)

Based on noted R-values and expected conditions at excavated subgrade; and, a 20 year Traffic Index which was calculated using guidelines in the Highway Design Manual (HDM), Section 613.3(3) and 613.5(2)(b), the following structural section strategies are recommended for shoulder greater than 5 feet in width. Each strategy is structurally equivalent.

Shoulder "STS" 100+00 to "C" 205+75

R = **50**	TI_{20} = **6.0**				
Strategy #	RHMA-G	HMA-A	AB (Cl-2)	SEG	AS (Cl-2)
1	0.15'	0.15'	0.35'	- - - -	- - - -
2	0.15'	0.30'	- - - -	- - - -	- - - -

Shoulder "C" 205+75 to "NTS" 116+87.5 and to "NTN" 214+96.4

R = **20** (15)	TI_{20} = **6.0**				
Strategy #	RHMA-G	HMA-A	AB (Cl-2)	SEG	AS (Cl-2)
1	0.15'	0.15'	0.45'	YES	0.40'
2	0.15'	0.15'	0.80'	YES	- - - -
3	0.15'	0.50'	- - - -	YES	- - - -

Frontage Road and Commercial Driveways (20 year)

Based on noted R-values and an estimated 20 year Traffic Index using HDM Table 613.5A for "Light" duty, the following structural section strategies are recommended for traveled way and shoulder of the frontage road and commercial driveways. Each strategy is structurally equivalent.

Frontage Road and Commercial Driveways "STS" 100+00 to "C" 205+75

R = **50**	TI_{20} = **8.0**				
Strategy #	RHMA-G	HMA-A	AB (Cl-2)	SEG	AS (Cl-2)
1	0.20'	0.20'	0.45'	- - - -	- - - -
2	0.20'	0.45'	- - - -	- - - -	- - - -

Frontage Road and Commercial Driveways "C" 205+75 to "FV2" 416+20

R = **20** (15)	TI_{20} = **8.0**				
Strategy #	RHMA-G	HMA-A	AB (Cl-2)	SEG	AS (Cl-2)
1	0.20'	0.20'	0.65'	YES	0.60'
2	0.20'	0.20'	1.15'	YES	- - - -
3	0.20'	0.70'	- - - -	YES	- - - -

Private Driveways (20 year)

Based on noted R-values and an estimated 20 year Traffic Index, the following structural section strategies are recommended for private driveways. Each strategy is structurally equivalent.

Private Driveways "STS" 100+00 to "C" 185+00 and "R" Line connections

R = **50**	TI_{20} = **7.0**				
Strategy #	RHMA-G	HMA-A	AB (Cl-2)	SEG	AS (Cl-2)
1	- - - -	0.35'	0.35'	- - - -	- - - -
2	- - - -	0.60'	- - - -	- - - -	- - - -

Structural Sections, 40 Year Design, Empirical Method

Traveled Way (40 year)

Based on noted R-values and expected conditions at excavated subgrade; and, a 40 year a Traffic Index which was provided by the Office of Traffic Forecasting and Modeling, the following structural section strategies are recommended for traveled way. These strategies contain enhancement per HDM 633.1(3).

Traveled Way "STS" 100+00 to "C" 205+75

R=50	TI_{40}=10.0								
Strategy	RBWC-G	RHMA-G	HMA-A	CTB-A	CTB-B	HMA-A (Rich)	Sep. Fabric	AB(CL-2)	SEG
1	0.10'	0.20'	0.35'	----	----	0.30'	YES	0.50'	YES
2	0.10'	0.20'	0.10'	0.35'	----	0.20'	YES	0.50'	YES
3	0.10'	0.20'	0.10'	----	0.40'	0.20'	YES	0.50'	YES

Traveled Way "C" 205+75 to "NTS" 116+87.5 and to "NTN" 214+96.4

R=20(15)	TI_{40}=10.0								
Strategy	RBWC-G	RHMA-G	HMA-A	CTB-A	CTB-B	HMA-A (Rich)	Sep. Fabric	AB(CL-2)	SEG
1	0.10'	0.20'	0.65'	----	----	0.30'	YES	0.50'	YES
2	0.10'	0.20'	0.20'	0.70'	----	0.20'	YES	0.50'	YES
3	0.10'	0.20'	0.20'	----	1.00'	0.20'	YES	0.50'	YES

Shoulder (40 year)

Based on noted R-values and expected conditions at excavated subgrade; and, a 40 year Traffic Index which was calculated using guidelines in the Highway Design Manual (HDM), Section 613.3(3) and 613.5(2)(b), the following structural section strategies are recommended for shoulder greater than 5 feet in width. These strategies contain enhancement per HDM 633.1(3).

Shoulder "STS" 100+00 to "C" 205+75

R=50	TI_{40}=6.5						
Strategy	RBWC-G	RHMA-A	HMA-A	HMA-A (Rich)	Sep. Fabric	AB(CL-2)	SEG
1	0.10'	0.20'	0.20'	0.15'	YES	0.50'	YES

Shoulder "C" 205+75 to "NTS" 116+87.5 and to "NTN" 214+96.4

R=20(15)	TI40=6.5						
Strategy	RBWC-G	RHMA-G	HMA-A	HMA-A (Rich)	Sep. Fabric	AB(CL-2)	SEG
1	0.10'	0.20'	0.40'	0.15'	YES	0.50'	YES

Frontage Road and Commercial Driveways (40 year)

Based on noted R-values and an estimated 40 year Traffic Index using HDM Table 613.5A for "Light" duty and growth factor applied, the following structural section strategies are recommended for traveled way and shoulder of the frontage road and commercial driveways. These strategies contain enhancement per HDM 633.1(3).

Frontage Road and Commercial Driveways "STS" 100+00 to "C" 205+75

R = **50**	TI_{40} = **8.5**						
Strategy	RBWC-G	RHMA-G	HMA-A	HMA-A (Rich)	Separation Fabric	AB (Cl-2)	SEG
1	0.10'	0.20'	0.20'	0.30'	YES	0.50'	YES

Frontage Road and Commercial Driveways "C" 205+75 to "FV2" 416+20

R = **20**(15)	TI_{40} = **8.5**						
Strategy	RBWC-G	RHMA-G	HMA-A	HMA-A (Rich)	Separation Fabric	AB (Cl-2)	SEG
1	0.10'	0.20'	0.50'	0.30'	YES	0.50'	YES

Private Driveways (40 year)

Based on noted R-values and an estimated 40 year Traffic Index, the following structural section strategy is recommended for private driveways. This strategy contains enhancement per HDM 633.1(3).

Private Driveways "STS" 100+00 to "C" 185+00 and "R" Line connections

R = **50**	TI_{40} = **7.0**						
Strategy	RBWC-G	RHMA-G	HMA-A	HMA-A (Rich)	Separation Fabric	AB (Cl-2)	SEG
1	0.10'	0.20'	0.20'	0.15'	YES	0.50'	YES

Notes on 40 year flexible pavement design enhancements:

- Modifications to HMA pavement design life greater than 20 years require special enhancements per highway design manual (HDM) 633.1(3) and shall be delineated in the project plans: Typical Sections.

- Include a lower layer of HMA with higher asphalt content (Rich bottom).

- Include a separation fabric above the granular layer to prevent migration of fine material.

- Include a 0.50 foot layer of Aggregate Base Class 2 (non-structural). This thickness shall not be reduced using geogrids or geotextiles.

- Include Subgrade Enhancement Geotextile (SEG) over soils with R values less than 40.

General notes:

• Verification testing of the 40 year Mechanistic Empirical designs may be required following AASHTO test methods T320 and T321. Currently, this testing is performed for the Department under contract with the University Of California Pavement Research Center (UCPRC), Davis. Contact the Office of Asphalt Pavement at the METs Lab in Sacramento for a final determination and assistance with contract oversight. Contract testing is estimated to cost between $20,000 and $30,000 and require 4 to 6 weeks.

• Imported borrow used to construct the embankment must meet a minimum R-value of 25 when placed within 4 feet of finished grade.

• For structural sections designed to last 20 years, the alternative to use full depth HMA (Type A) should be considered for special situations only. This would include, but not be limited to, narrow widening, shallow utilities coverage, or shortening traffic control periods.

• When a widened shoulder or new structural section is constructed to adjoin an existing structural section, geosynthetic pavement interlayer (GPI) should be placed so that it will overlap the new/existing joint by 2 feet on each side. Placement of the GPI should be as low in the HMA as possible and on the same plane for both the existing structural section and the new structural section. This will help prevent reflective cracking from the underlying joint. Please see Attachment "C" for detail.

• The aggregate base (AB Cl-2) thicknesses shown above for shoulder (20 year and 40 year) are the minimums for structural integrity. Per HDM 613.5(2)(b), the grading plane of the shoulder can match the grading plane of the adjacent lane to save construction costs. It is the option of the designer to use the adjacent traveled way aggregate base thicknesses under the shoulder pavement structure to provide an even grading plane of the subgrade as noted in this section of the HDM.

• Aggregate base reduction factor (20 year design options). Following the Department's guide: "*Aggregate Base Enhancement with Bi-axial Geogrids for Flexible Pavement*," the thickness of the aggregate base layer (AB Cl-2) can be reduced by 20.0 percent over native subgrade soils with R-values less than 40 by using Bi-axial geogrid at the interface of the subgrade and the aggregate base layer (in combination with the SEG previously specified). Contact this office for specifications on Bi-axial geogrid if the 20 year option is chosen and this is determined to be a cost effective alternative.

Material Specifications

• Rubberized Bonded Wearing Course Gap Graded (RBWC-G), Rubberized Hot Mix Asphalt Gap Graded (RHMA-G), and Hot Mix Asphalt (HMA-A) shall conform to Section 39 of the Standard Specifications.

40 Year RHMA / HMA Alternative: Rich Bottom Hot Mix Asphalt: used to construct the lower layer of the roadway shall be Hot Mix Asphalt, Type A (HMA-A Rich) conforming to Section 39 of the Standard Specifications and will contain approximately 1.0% over optimum bitumen content and use a stiffer grade of asphalt binder than conventional HMA-A.

• Asphalt Binder: For "***Low Mountain***" climate region shall be **PG 64-16** for RBWC-G and for RHMA-G; and, **PG 64-28 M** for HMA-A. The asphalt binder for HMA-A (Rich) shall be **PG 70-10**. The estimated percentage of asphalt to be added per total weight of mixture (Superpave) is 5.5% for BWC-G, 7.5% for RHMA-G, and 5.5% for HMA-A. The estimated percentage of asphalt to be added per total weight of mixture is 6.5% to 7.0% for HMA-A (Rich).

• Paint Binder (Tack Coat): Shall conform to Section 39 of the Standard Specifications.

• Aggregate Base (AB): Shall be Class 2, conforming to Section 26 of the Standard Specifications with the following changes: Aggregate base must have a contract compliance value of at least 25 as determined under California Test Method 229 and the minimum loose unit weight determined by California Test Method 212, Compacted Method (by rodding) must be 105 lbs/ft^3.

• Cement Treated Aggregate Base (CTB): Shall be Class A or Class B (depending on LCCA) following the 2015 Standard Specification, Chapter 27 Cement Treated Bases.

• Aggregate Sub base (AS): Shall be Class 2 conforming to Section 25 of the Standard Specifications.

• Shoulder Backing: Shall conform to the requirements within the Standard Special Provisions for shoulder backing, with the following change: The minimum loose unit weight as determined by California Test Method 212, (a. Compacted Method (by rodding)) must be 105 lbs/ft^3.

• Separation fabric: Shall be woven and have a minimum grab tensile strength of 250 lbs. Please see Attachment "D" for a table of required geotextile parameters at this location.

• Subgrade Enhancement Geotextile (SEG): Shall be woven and have a minimum grab tensile strength of 320 lbs. Please see Attachment "E" for a table of required geotextile parameters at this location.

Alternative Pipe Culverts

The following Alternative Pipe Culvert recommendations included in this materials report are based on results of soil pH and resistivity testing from soil and water samples taken at this project's locations. Alternative pipe culverts estimated to provide a 50 year service life are given in Attachment "F."

• Non-reinforced concrete pipe is specified in lieu of reinforced concrete pipe due to the chloride concentrations expected at this project's location.

• Pipe joints should be specified as "Positive" when located with fill heights greater than 10 feet deep. All other pipe joints should be specified as "Standard."

• Pipe culvert design should consider construction loads on culverts following HDM 856.1.

• Generally, the minimum cover for culverts should follow the guidelines in HDM Table 856.5 for minimum cover heights otherwise see Attachment "G" or Attachment "H" for shallow culvert installation details.

If you have any questions, please call Wesley Johnson at (707) 445-6386.

Attachments

A. Seal Random Cracks Detail
B. ME Design Summary Reports (2)
C. Typical Section (Widening) and GPI placement Detail
D. Separation Fabric Specifications Table
E. Subgrade Enhancement Geotextile (SEG) Specifications Table
F. Alternative Pipe Culvert Table
G. Culvert Backfill (Shallow Installations) Detail
H. Culvert Backfill (Shallow Installations) Detail with Minor Concrete

cc: M. Sobota
B. Simon
J. Matteoli (e. copy)
Lab Files

ATTACHMENT A

01-LAK-29 PM 28.50-31.60
01-298110

W = WIDTH OF ROUTING = WIDTH OF CRACK + 1/4" MIN
D = DEPTH OF ROUTING = W + 1/4" MIN

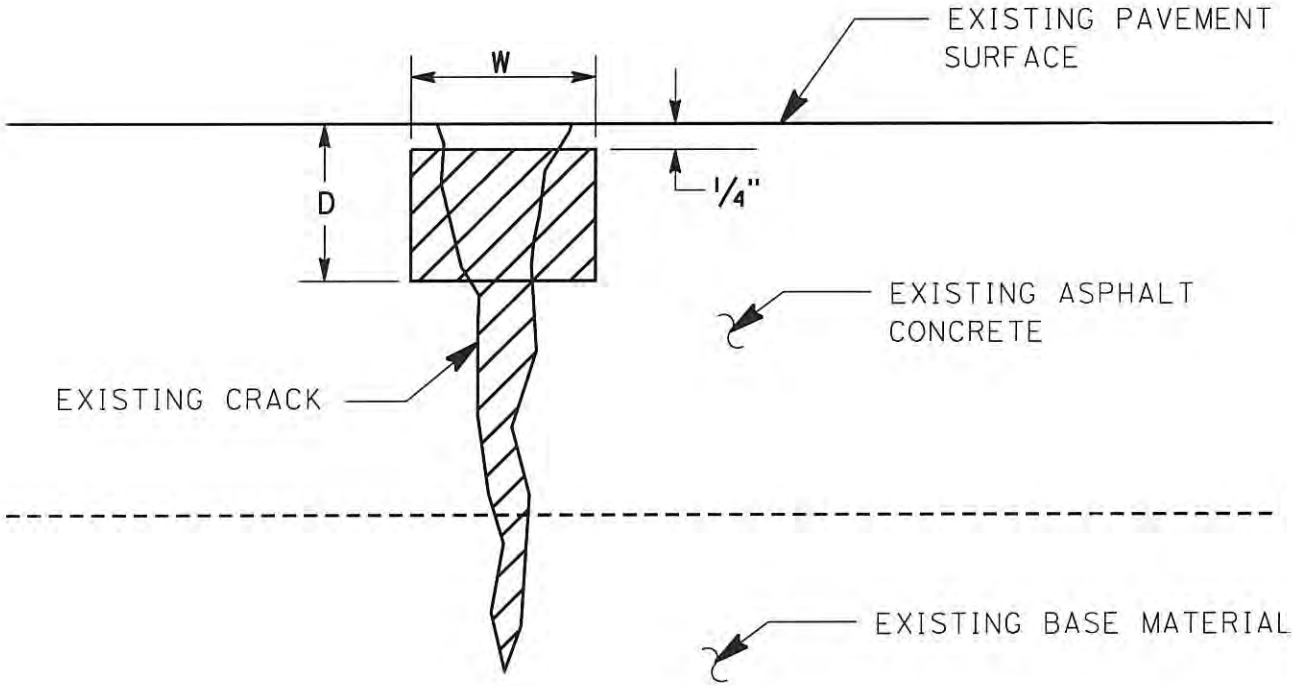

NOTES:

1. ALL CRACKS 1/4" WIDE OR GREATER ARE TO BE ROUTED AND SEALED.
2. IF ANY PART OF ANY CRACK IS 1/4" OR WIDER, THEN THE ENTIRE CRACK WILL BE ROUTED AND SEALED.
3. NO SEALANT MATERIAL WILL BE ALLOWED ON HMA PAVEMENT SURFACE.

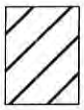

CRACK SEALANT

ROUT AND SEAL RANDOM CRACKS
TYPICAL CROSS SECTION

Attachment B

01-LAK-29 PM 28.5-31.6
01-298110

Mechanistic-Empirical Design Summary Reports

CalME Analysis Report

Report Key:UXWC40AKIU3GAD5Q

Analysis Date: 9/19/2016 10:24:49 AM

CalME Version: 2.0.43-20140903

Timestamp of Material Library: 8/21/2014 4:00 PM

Timestamp of Project Database Template: 8/21/2014 4:00 PM

Project Database: C:\- - -WORK- - -\- - - LAB - - -\- - -Project Recommendations- - -\01_298111\DesignData01_298111_LAK_29.mdb

Project Name: LAK 29 Expressway Segment 2C

Project Description: Project LAK 29 Expressway Segment 2C created on: 8/23/2016 1:44:59 PM

Pavement Structure

Layer	Material	Thick	Modulus	Poisson	R	GF	Cost/ft3
1	RHMA-G (Mix 24) RAP00 PG 64-16 base Crushed Alluvial (SHRP II R21)	0.20	456.5	0.35	N/A	0	6.80
2	HMA Type A (Mix 12) RAP00 PG 64-16 Crushed Alluvial Superpave	0.35	808.2	0.35	N/A	0	6.12
3	AB-Class 2, HDM 2012	0.50	45.0	0.35	78	1.1	0.99
4	GM, HDM 2012	Infinite	29.9	0.35	54	0	0.00

Project Location:

a. District: 1

b. Route No.: 29

c. County: LAK

d. Postmile: 20.31001A

e. No. of Lanes: 2

Design Type: New Design

Climate Zone: Low Mountain

Traffic Spectrum: Group1a

Design Life: 40 Years

Corresponding TI: 10.0

Corresponding ESALs: 2,423,903

Axle for First Year: 133,532

Linear Growth Rate Per Year: 4%

Failure Criteria:

a. Cracking: 0.15 ft/ftsq

b. Rutting: 0.4 inch

c. IRI: 170 inch/mile

Simulation Type: Monte Carlo Simulation

Random Sequence Type: Not Randomized

Construction Variabilities

Layer	CoV Thickness	sdf Modulus	sdf PdA	sdf FtA	sdf CrA
1	0.15	2	2	2	2
2	0.15	2	2	2	2
3	0.2	2	2	2	2
4	0	2	2	2	2

Distribution of Predicted Pavement Life

Trial No.	Cracking	Rutting	Overall
33	>40.1	>40.1	>40.1
34	>40.1	>40.1	>40.1
35	>40.1	>40.1	>40.1
36	>40.1	>40.1	>40.1
37	>40.1	>40.1	>40.1
38	>40.1	>40.1	>40.1
39	>40.1	>40.1	>40.1
40	>40.1	>40.1	>40.1
41	>40.1	>40.1	>40.1
42	>40.1	>40.1	>40.1
43	>40.1	>40.1	>40.1
44	>40.1	>40.1	>40.1
45	>40.1	>40.1	>40.1
46	>40.1	>40.1	>40.1
47	>40.1	>40.1	>40.1
48	>40.1	>40.1	>40.1
49	>40.1	>40.1	>40.1
50	>40.1	>40.1	>40.1
Mean	N/A	N/A	N/A
SDF	N/A	N/A	N/A
No. Failed	1 of 50	1 of 50	2 of 50
No. Passed	49 of 50	49 of 50	48 of 50
Reliab.(%)	98	98	96

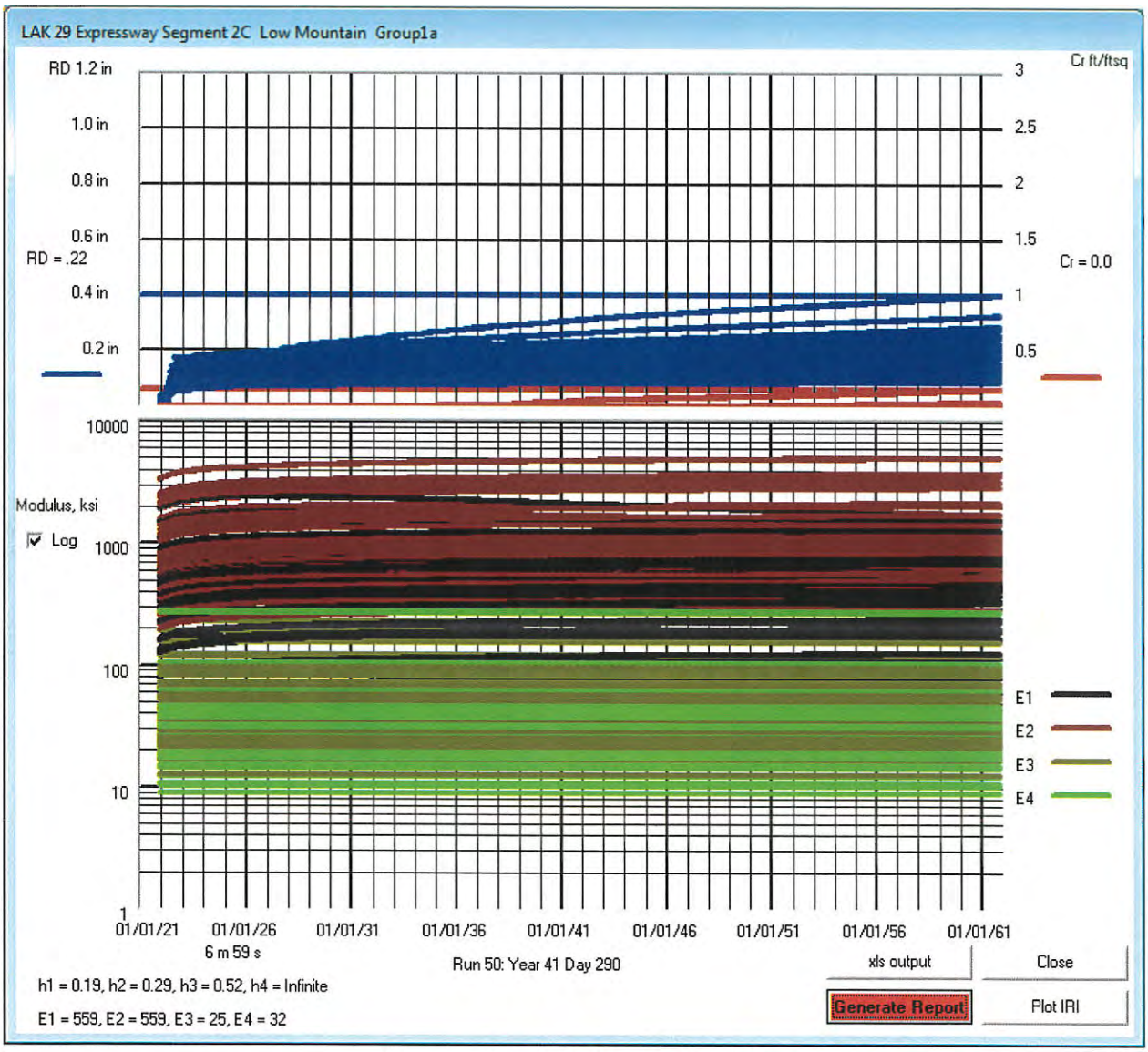

Screen Shot of Simulation(s)

END OF REPORT

CalME Analysis Report

Report Key:Q292LJP8TU7TZZ51

Analysis Date: 9/19/2016 10:54:35 AM

CalME Version: 2.0.43-20140903

Timestamp of Material Library: 8/21/2014 4:00 PM

Timestamp of Project Database Template: 8/21/2014 4:00 PM

Project Database: C:\- - -WORK- - -\- - - LAB - - -\- - -Project Recommendations- - -\01_298111\DesignData01_298111_LAK_29.mdb

Project Name: LAK 29 Expressway Segment 2C

Project Description: Project LAK 29 Expressway Segment 2C created on: 8/23/2016 1:44:59 PM

Pavement Structure

Layer	Material	Thick	Modulus	Poisson	R	GF	Cost/ft3
1	RHMA-G (Mix 24) RAP00 PG 64-16 base Crushed Alluvial (SHRP II R21)	0.20	456.5	0.35	N/A	0	6.80
2	HMA Type A (Mix 12) RAP00 PG 64-16 Crushed Alluvial Superpave	0.65	808.2	0.35	N/A	0	6.12
3	AB-Class 2, HDM 2012	0.50	45.0	0.35	78	1.1	0.99
4	ML, HDM 2012	Infinite	10.9	0.35	20	0	0.00

Project Location:

a. District: 1

b. Route No.: 29

c. County: LAK

d. Postmile: 20.31001A

e. No. of Lanes: 2

Design Type: New Design

Climate Zone: Low Mountain

Traffic Spectrum: Group1a

Design Life: 40 Years

Corresponding TI: 10.0

Corresponding ESALs: 2,423,903

Axle for First Year: 133,532

Linear Growth Rate Per Year: 4%

Failure Criteria:

a. Cracking: 0.15 ft/ftsq

b. Rutting: 0.4 inch

c. IRI: 170 inch/mile

Simulation Type: Monte Carlo Simulation

Random Sequence Type: Not Randomized

Construction Variabilities

Layer	CoV Thickness	sdf Modulus	sdf PdA	sdf FtA	sdf CrA
1	0.15	2	2	2	2
2	0.15	2	2	2	2
3	0.2	2	2	2	2
4	0	2	2	2	2

Distribution of Predicted Pavement Life

Trial No.	Cracking	Rutting	Overall
33	>40.1	>40.1	>40.1
34	>40.1	>40.1	>40.1
35	>40.1	>40.1	>40.1
36	>40.1	>40.1	>40.1
37	>40.1	>40.1	>40.1
38	>40.1	>40.1	>40.1
39	>40.1	>40.1	>40.1
40	>40.1	>40.1	>40.1
41	>40.1	>40.1	>40.1
42	>40.1	>40.1	>40.1
43	>40.1	>40.1	>40.1
44	>40.1	>40.1	>40.1
45	>40.1	>40.1	>40.1
46	>40.1	>40.1	>40.1
47	>40.1	>40.1	>40.1
48	>40.1	>40.1	>40.1
49	>40.1	>40.1	>40.1
50	>40.1	>40.1	>40.1
Mean	N/A	N/A	N/A
SDF	N/A	N/A	N/A
No. Failed	2 of 50	0 of 50	2 of 50
No. Passed	48 of 50	50 of 50	48 of 50
Reliab.(%)	96	100	96

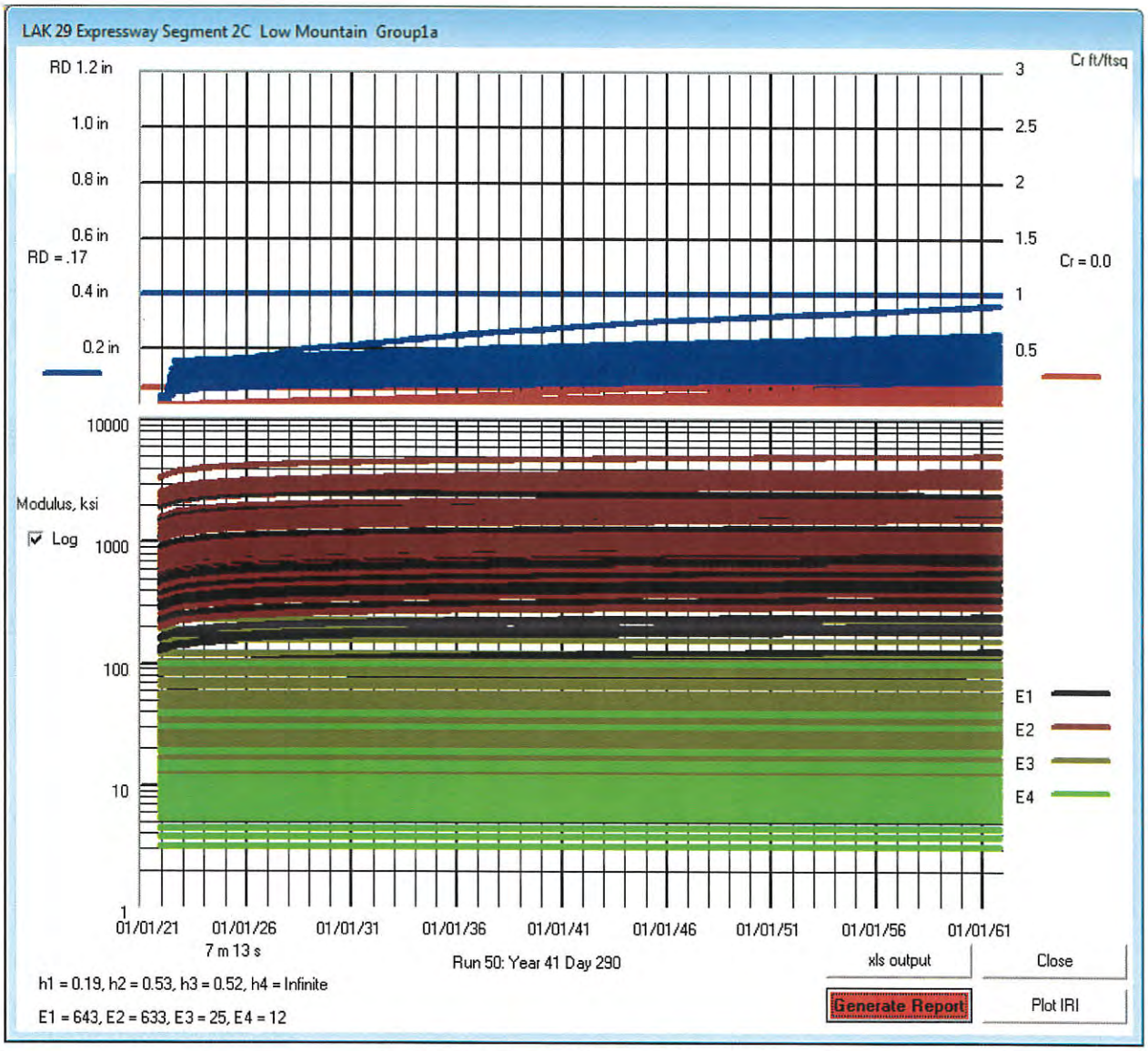

Screen Shot of Simulation(s)

END OF REPORT

ATTACHMENT C

01_LAK_29 PM 28.50-31.60
01-298110

Structural Section and Geosynthetic

Pavement Interlayer Detail

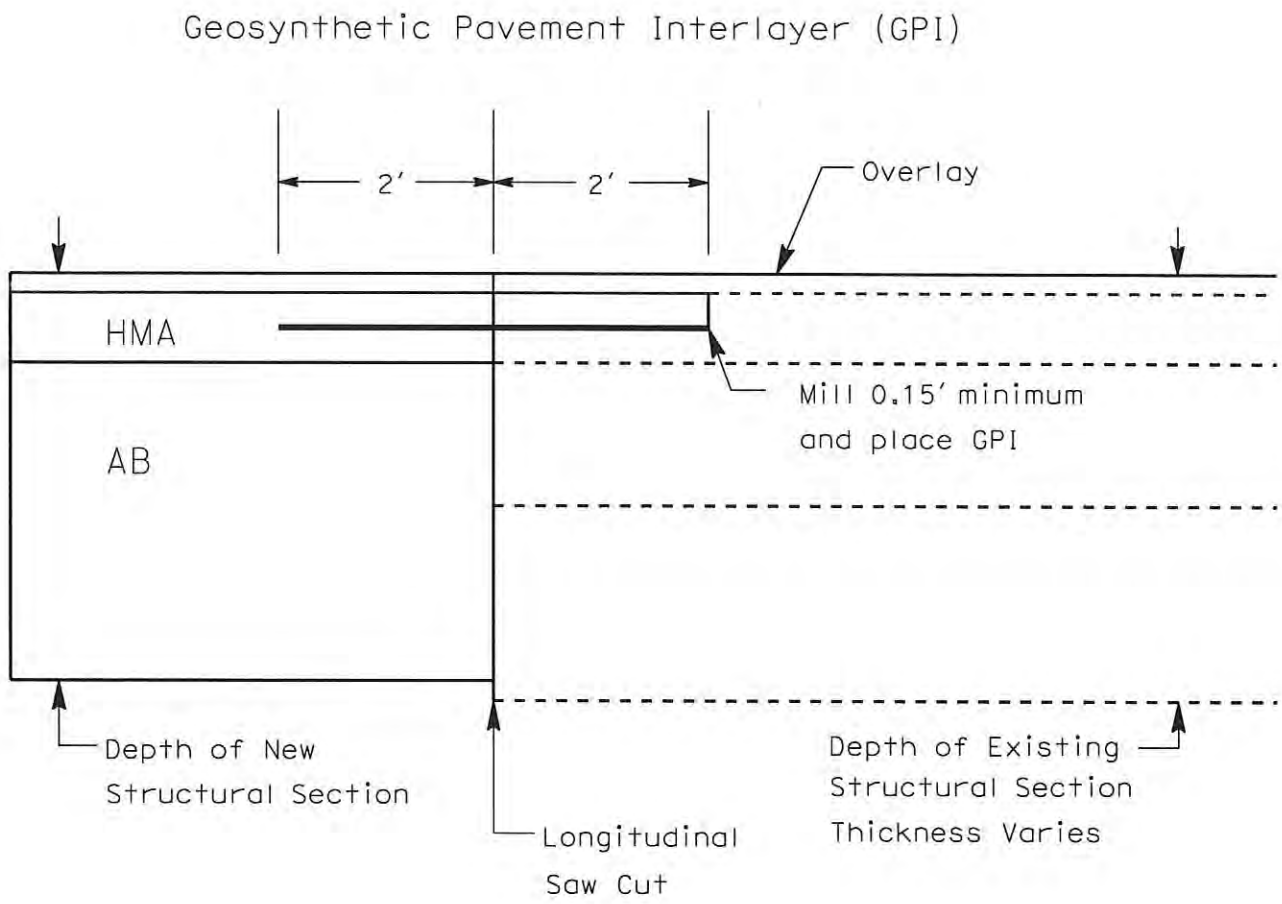

NO SCALE

ATTACHMENT D

01-LAK-29 PM 28.50-31.60
01-298110

Separation Fabric

Geotextile used a separation fabric shall be Class A1 woven polyester or polypropylene and shall conform to the following requirements:

Property	ASTM Test	Value
Grab Tensile Strength, minimum, Lbs	D 4632	250
Puncture Resistance, minimum, Lbs	D 6241	500
Tear (impact) Resistance, minimum, Lbs	D 4533	90
Permittivity, minimum, sec^{-1}	D 4491	0.05
Apparent Opening size, maximum, Inch	D 4751	0.012
Ultraviolet Stability, minimum, %, (after 500 hrs exposure)	D 4355	70
Sewn seam strength (minimum), Lbs	D 4632	283
Elongation at break, %	D 4632	<50

ATTACHMENT E

01-LAK-29 PM 28.50-31.60
01-298110

Subgrade Enhancement Geotextile (SEG)

Subgrade enhancement geotextile shall be Class B2 woven polyester or polypropylene and shall conform to the following requirements:

Property	ASTM Test	Value
Grab Tensile Strength, minimum, Lbs	D 4632	320
Puncture Resistance, minimum, Lbs	D 6241	620
Tear (impact) Resistance, minimum, Lbs	D 4533	120
Permittivity, minimum, sec^{-1}	D 4491	0.20
Apparent Opening size, maximum, Inch	D 4751	0.012
Ultraviolet Stability, minimum, %, (after 500 hrs exposure)	D 4355	70
Sewn seam strength (minimum), Lbs	D 4632	283
Elongation at break, %	D 4632	<50

LAK 29, Segment 2C

01-LAK-29 PM 28.50-31.60
01-298110

		Galvanized Corrugated Steel Pipe[1]			Galvanized Corrugated Polymeric Sheet Coated Steel Pipe[1]		Corrugated Aluminum Pipe[2]			Non-reinforced Concrete Pipe[3] (Class 2)			HDPE Corrugated Pipe[4] Type S
		8 Gage	10 Gage	12 Gage	12 Gage	14 Gage	12 Equiv. Gage	14 Equiv. Gage	16 Equiv. Gage	Wall Thickness			
DS #	Dia. (In)	0.168"	0.138"	0.109"	0.109"	0.079"	0.105"	0.075"	0.060"	4.75"	4.25"	3"	
80	24	----	Yes	----	----	Yes	----	----	Yes	----	----	Yes	Yes
46	36	----	Yes	----	----	Yes	----	Yes	----	Yes	----	----	Yes
6i	57	----	Yes	----	----	Yes	Yes	----	----	----	----	----	Yes
521	36	----	Yes	----	----	Yes	----	Yes	----	Yes	----	----	Yes
6o	48	----	Yes	----	----	Yes	Yes	----	----	----	----	----	Yes
544	24	----	Yes	----	----	Yes	----	----	Yes	----	----	Yes	Yes
48	36	----	Yes	----	----	Yes	----	Yes	----	Yes	----	----	Yes
49	24	----	----	Yes	----	Yes	----	----	Yes	----	----	Yes	Yes
512	42	----	Yes	----	----	Yes	Yes	----	----	----	----	----	Yes
50	24	----	----	Yes	----	Yes	----	----	Yes	----	----	Yes	Yes
529	24	----	Yes	----	----	Yes	----	----	Yes	----	----	Yes	Yes
528	24	----	Yes	----	----	Yes	----	----	Yes	----	----	Yes	Yes
527	24	----	Yes	----	----	Yes	----	----	Yes	----	----	Yes	Yes
82	30	----	Yes	----	----	Yes	----	Yes	----	----	Yes	----	Yes
52	36	----	Yes	----	----	Yes	----	Yes	----	Yes	----	----	Yes
7i	36	----	Yes	----	----	Yes	----	Yes	----	Yes	----	----	Yes

Notes:

1. See HDM 852.3(3)(a) for allowable height of fill over steel pipe.
2. See HDM 852.4(3)(a) for allowable height of fill over aluminum pipe.
3. See HDM 852.6(2)(a) for allowable height of fill over plastic pipe.
4. See HDM 852.1(4) for allowable height of fill over non-reinforced concrete pipe pipe.

		Galvanized Corrugated Steel Pipe[1]			Galvanized Corrugated Polymeric Sheet Coated Steel Pipe[1]		Corrugated Aluminum Pipe[2]			Non-reinforced Concrete Pipe[3] (Class 2)			HDPE Corrugated Pipe[4] Type S
		8 Gage	10 Gage	12 Gage	12 Gage	14 Gage	12 Equiv. Gage	14 Equiv. Gage	16 Equiv. Gage	Wall Thickness			
DS #	Dia. (In)	0.168"	0.138"	0.109"	0.109"	0.079"	0.105"	0.075"	0.060"	4.75"	4.25"	3"	
545	24	----	----	Yes	----	Yes	----	----	Yes	----	----	Yes	Yes
546	24	----	----	Yes	----	Yes	----	----	Yes	----	----	Yes	Yes
53	36	----	Yes	----	----	Yes	----	Yes	----	Yes	----	----	Yes
547	24	----	----	Yes	----	Yes	----	----	Yes	----	----	Yes	Yes
548	24	----	----	Yes	----	Yes	----	----	Yes	----	----	Yes	Yes
56	24	----	----	Yes	----	Yes	----	----	Yes	----	----	Yes	Yes
55	24	----	----	Yes	----	Yes	----	----	Yes	----	----	Yes	Yes
TS5	24	----	----	Yes	----	Yes	----	----	Yes	----	----	Yes	Yes
58	24	----	----	Yes	----	Yes	----	----	Yes	----	----	Yes	Yes
57	24	----	----	Yes	----	Yes	----	----	Yes	----	----	Yes	Yes
59	30	----	Yes	----	----	Yes	----	Yes	----	----	Yes	----	Yes
61	30	----	Yes	----	----	Yes	----	Yes	----	----	Yes	----	Yes
60	30	----	Yes	----	----	Yes	----	Yes	----	----	Yes	----	Yes
533	24	----	----	Yes	----	Yes	----	----	Yes	----	----	Yes	Yes
7Co	30	----	Yes	----	----	Yes	----	Yes	----	----	Yes	----	Yes
7CiB	24	----	----	Yes	----	Yes	----	----	Yes	----	----	Yes	Yes
7CiA	24	----	----	Yes	----	Yes	----	----	Yes	----	----	Yes	Yes
549	24	----	----	Yes	----	Yes	----	----	Yes	----	----	Yes	Yes
7Bo1	24	----	----	Yes	----	Yes	----	----	Yes	----	----	Yes	Yes
7Bo2	24	----	----	Yes	----	Yes	----	----	Yes	----	----	Yes	Yes

Notes:

1. See HDM 852.3(3)(a) for allowable height of fill over steel pipe.
2. See HDM 852.4(3)(a) for allowable height of fill over aluminum pipe.
3. See HDM 852.6(2)(a) for allowable height of fill over plastic pipe.
4. See HDM 852.1(4) for allowable height of fill over non-reinforced concrete pipe pipe.

		Galvanized Corrugated Steel Pipe[1]			Galvanized Corrugated Polymeric Sheet Coated Steel Pipe[1]		Corrugated Aluminum Pipe[2]			Non-reinforced Concrete Pipe[3] (Class 2)			HDPE Corrugated Pipe[4] Type S
		8 Gage	10 Gage	12 Gage	12 Gage	14 Gage	12 Equiv. Gage	14 Equiv. Gage	16 Equiv. Gage	Wall Thickness			
DS #	Dia. (In)	0.168"	0.138"	0.109"	0.109"	0.079"	0.105"	0.075"	0.060"	4.75"	4.25"	3"	
550	24	----	Yes	----	----	Yes	----	----	Yes	----	----	Yes	Yes
62	36	----	Yes	----	----	Yes	----	Yes	----	Yes	----	----	Yes
526	24	Yes	----	----	Yes	----	----	----	Yes	----	----	Yes	Yes
525	24	Yes	----	----	Yes	----	----	----	Yes	----	----	Yes	Yes
524	24	Yes	----	----	Yes	----	----	----	Yes	----	----	Yes	Yes
65	42	Yes	----	----	Yes	----	Yes	----	----	----	----	----	Yes
66	57	----	Yes	----	----	Yes	Yes	----	----	----	----	----	Yes
8i	57	----	Yes	----	----	Yes	Yes	----	----	----	----	----	Yes
8o	24	----	Yes	----	----	Yes	----	----	Yes	----	----	Yes	Yes
67	24	----	Yes	----	----	Yes	----	----	Yes	----	----	Yes	Yes
523	24	Yes	----	----	Yes	----	----	----	Yes	----	----	Yes	Yes
551	24	----	Yes	----	----	Yes	----	----	Yes	----	----	Yes	Yes
70	24	Yes	----	----	Yes	----	----	----	Yes	----	----	Yes	Yes
71	24	Yes	----	----	Yes	----	----	----	Yes	----	----	Yes	Yes
552	24	Yes	----	----	Yes	----	----	----	Yes	----	----	Yes	Yes
73	24	Yes	----	----	Yes	----	----	----	Yes	----	----	Yes	Yes

Notes:

1. See HDM 852.3(3)(a) for allowable height of fill over steel pipe.
2. See HDM 852.4(3)(a) for allowable height of fill over aluminum pipe.
3. See HDM 852.6(2)(a) for allowable height of fill over plastic pipe.
4. See HDM 852.1(4) for allowable height of fill over non-reinforced concrete pipe pipe.

ATTACHMENT G

01_LAK_29 PM 28.50-31.60
01-298110

Structure Backfill, Slurry Cement Backfill, or Controlled Low Strength Backfill (Shallow Installations)

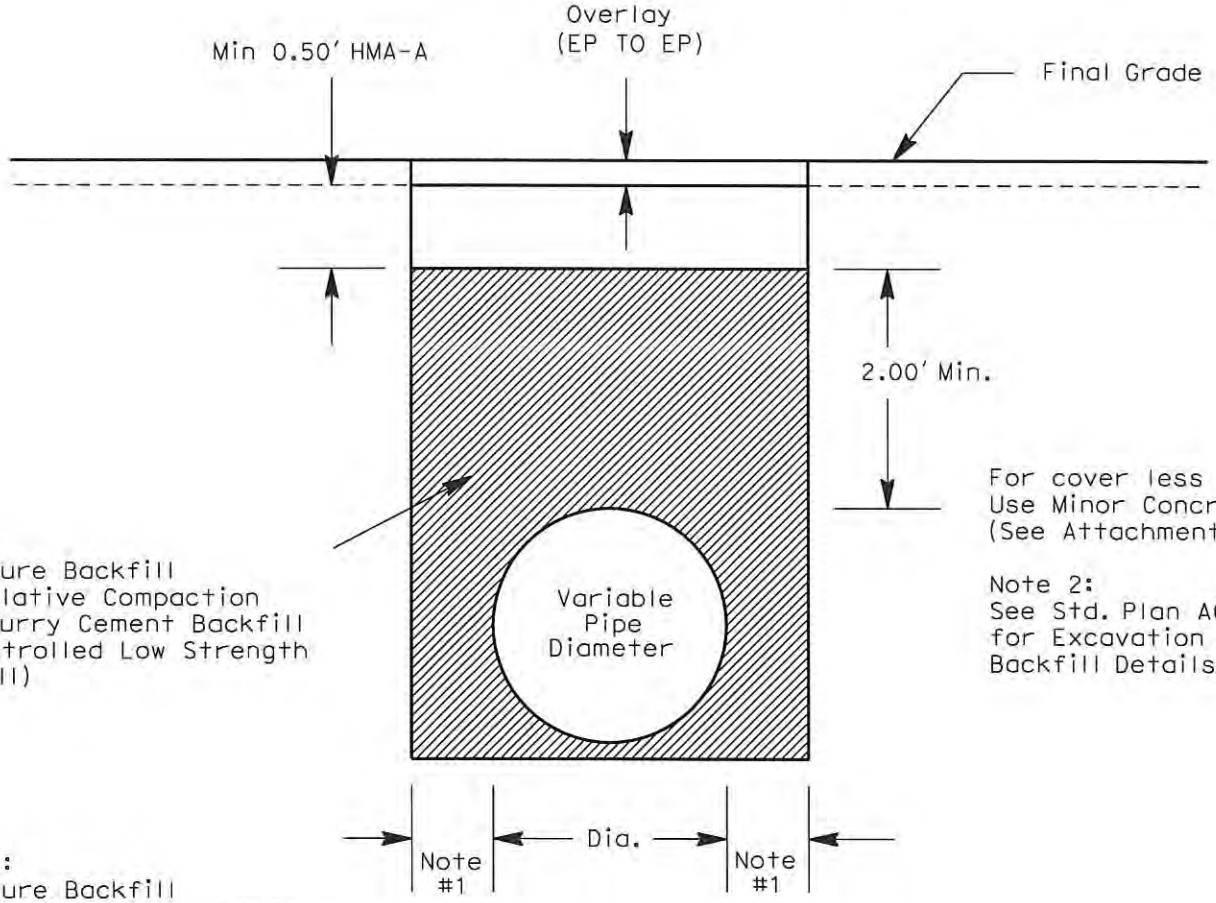

For cover less than 2.00'
Use Minor Concrete (Backfill)
(See Attachment H)

Note 2:
See Std. Plan A62F
for Excavation and
Backfill Details

Structure Backfill
95% Relative Compaction
(or: Slurry Cement Backfill
or Controlled Low Strength
Backfill)

Note 1:
Structure Backfill
Trench width shall have a minimum of 2.00' of clear distance between the outside of the pipe and the side of excavation on each side.
Backfill Details

Slurry Cement Backfill or Controlled Low Strength Backfill
Trench width shall be a minimum of 0.50' beyond outside edge of pipe and the side of excavation on each side for pipe diameters up to and including 42", or 1.00' for pipes over 42" in diameter.
See Standard Specifications 19-3.03F or 19-3.03I.

NO SCALE

ATTACHMENT H

01_LAK_29 PM 28.50-31.60
01-298110

Minor Concrete (Backfill)
Shallow Installations

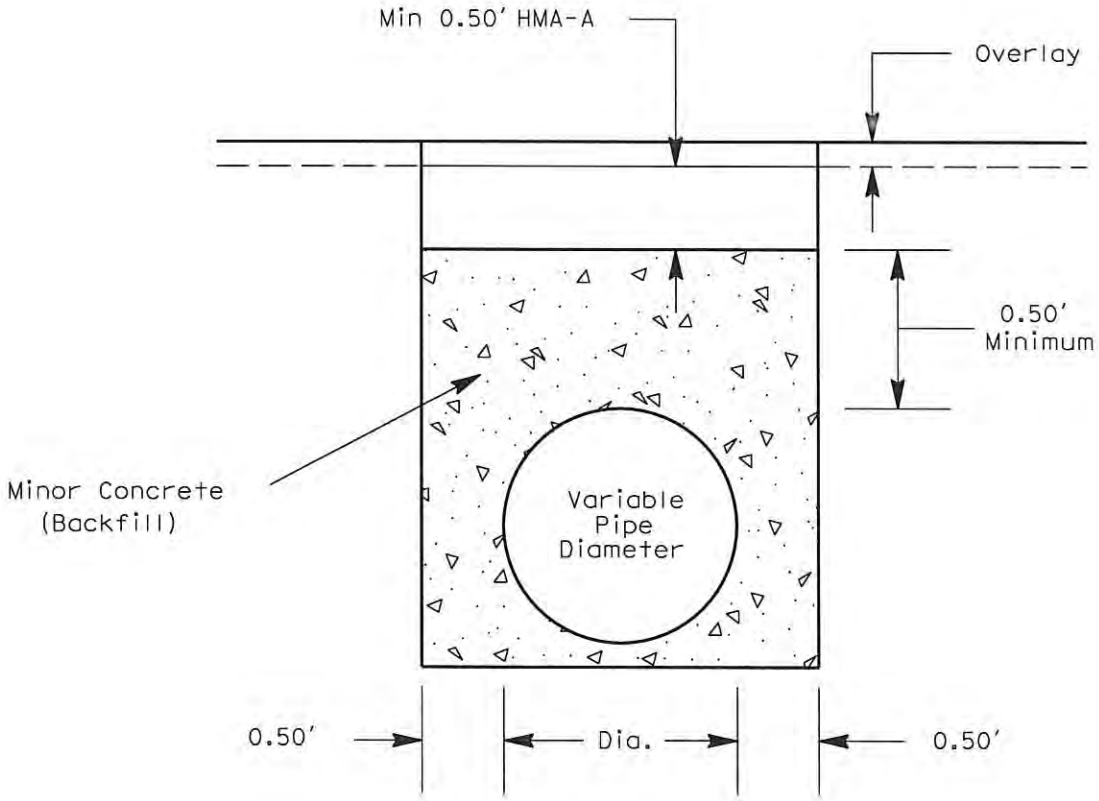

NO SCALE

ATTACHMENT L
SIGNAL CONFIGURATION

Map - Lake 29 Improvement Project **2041 PM PK HR Build**

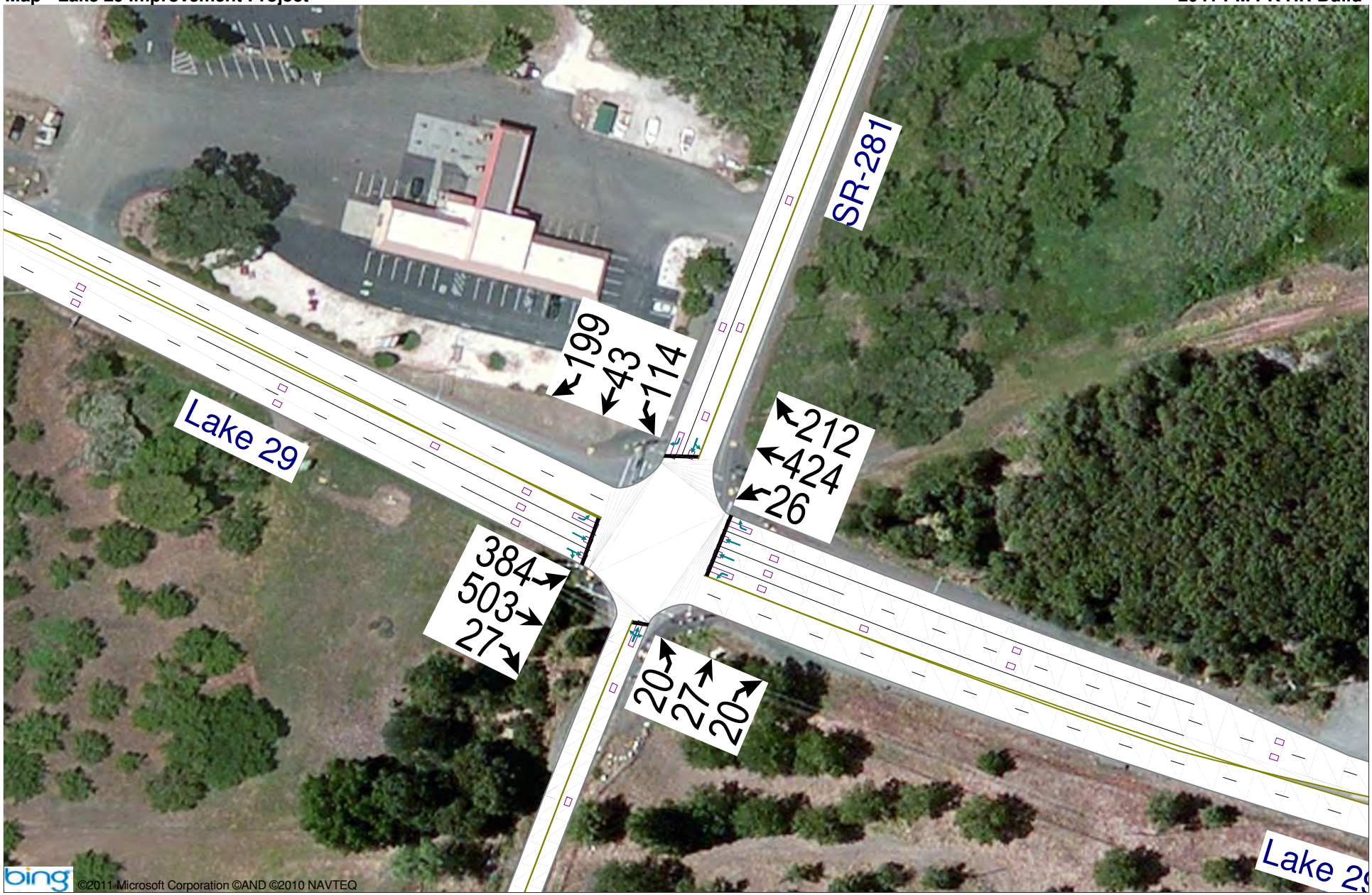

Lake 29 Improvement Project 2041 PM PK HR Build

PROPOSED CHANNELIZATION

EXISTING CHANNELIZATION

ATTACHMENT L

01-LAK-29
PM 23.6/31.6
01-2981U0
01 0000 0090

ATTACHMENT M
STORM WATER DATA REPORT

District-County-Route: 01-LAK-29
Post Mile Limits: KP 37.9/50.9 (PM 23.6/31.6)
Project Type: Upgrade to a Four-Lane Expressway
Project ID (or EA): 01-2981U0
Program Identification: STIP
Phase: ☐ PID
☒ PA/ED
☐ PS&E

Regional Water Quality Control Board(s): Central Valley

Is the Project required to consider Treatment BMPs? Yes ☒ No ☐
If yes, can Treatment BMPs be incorporated into the project? Yes ☒ No ☐
If No, a Technical Data Report must be submitted to the RWQCB at least 30 days prior to the projects RTL date. List RTL Date: N/A

Total Disturbed Soil Area: 153.7 hectares (379.9 acres) Risk Level: 2
Estimated: Construction Start Date: 08/03/2019 Construction Completion Date: 12/01/2022
Notification of Construction (NOC) Date to be submitted: To Be Determined

Erosivity Waiver	Yes ☐	Date:	No ☒
Notification of ADL reuse (if Yes, provide date)	Yes ☐	Date:	No ☒
Separate Dewatering Permit (if yes, permit number)	Yes ☐	Permit #	No ☒

This Report has been prepared under the direction of the following Licensed Person. The Licensed Person attests to the technical information contained herein and the date upon which recommendations, conclusions, and decisions are based. Professional Engineer or Landscape Architect stamp required at PS&E.

Brian Simon, Registered Project Engineer — Date: 11/27/2016

I have reviewed the stormwater quality design issues and find this report to be complete, current and accurate:

Jaime Matteoli, Project Manager — Date: 11/28/2016

Brett Johnson, Designated Maintenance Representative — Date: 11/28/2016

James Williamson, Designated Landscape Architect Representative — Date: 11/29/2016

Sheila Sadkowski, District/Regional Design SW Coordinator — Date: 11/29/2016

STORM WATER DATA INFORMATION

1. Project Description

The California Department of Transportation (Caltrans), Federal Highway Administration (FHWA), in cooperation with the Lake County/City Area Planning Council (APC), propose to upgrade a 13-Kilometer (8.0-mile) segment of State Route (SR) 29, in Lake County, from 0.2-km (0.1-mile) south of the intersection with Diener Drive at KP 37.9 (PM23.6) to 0.9 km (0.6 mile) north of the junction with SR 175 at KP 50.9 (PM 31.6).

- Upgrade SR 29 from a two-lane conventional highway to a four-lane expressway with access control on a new alignment
- Reconstruct SR 29/Diener Drive, SR 29/SR 281/Red Hills Road, SR 29/SR175 intersections
- Construct Frontage roads, as needed, to replace existing access to SR 29 from adjacent properties
- Construct level spreader to perpetuate existing water flows near native endangered plants
- Construct retaining wall to preserve geological feature
- Upgrade drainage systems through the entire length of project including box culverts for seasonal streams

The project will provide four 3.6-meter (12 ft.) lanes with 1.5-meter (5 ft.) inside and 3.0-meter (10 ft.) outside paved shoulders with a 13.8-meter (46 ft.) median. Intersections for access control will include dedicated left and right turn lanes along with acceleration/deceleration lanes.

The total disturbed soil area (DSA) for this project is 153.7 hectares (379.9 acres), which includes 13.1 hectares (32.4 acres) of existing impervious area for SR 29 and the vicinity. The total proposed impervious area is 46.7 hectares (115.4 acres) and incorporates 0.7 hectares of existing SR 29. The total proposed impervious area minus the existing impervious area results in a net new impervious area of 33.6 hectares (83.0 acres).

Lake County is designated by the Central Valley Regional Water Quality Control Board (CV-RWQCB) as a Traditional Small Municipal Separate Storm Sewer System (MS4). However, there are no MS4s within the project limits (Water Quality Report, 2007; Addendum, 2016). Lake County has an approved Storm Water Management Plan (SWMP) to address construction activities and storm water runoff within the county. No special concerns, additional requirements, or conflicting stormwater issues are identified in the Lake County SWMP as applicable to this project.

2. Site Data and Storm Water Quality Design Issues (refer to Checklists SW-1, SW-2, and SW-3)

The California Environmental Protection Agency has delegated administration of the federal National Pollution Discharge Elimination System (NPDES) program to the State Water Resources Control Board (SWRCB) and nine regional boards. This project is located within the jurisdiction of the Central Valley Regional Water Quality Control Board. The SWRCB has developed and issued a statewide NPDES permit to regulate storm water discharges from all Caltrans activities on its highways and facilities. All construction projects require either a Water Pollution Control Program (WPCP) or a Storm Water Pollution Prevention Plan (SWPPP) be prepared and implemented during construction.

Other agencies that have jurisdiction over water resources in the project area include the East Lake Resource Conservation District, the Lake County Water Resources Division, and the California Department of Water Resources (DWR)—Northern District.

The 1999 Caltrans Statewide MS4 requirements apply to this project.

Hydraulic Units

The project spans across two hydrologic sub-areas within the Cache Creek hydrologic unit in Lake County. The Lower Lake Hydrologic Sub-Area (sub-area #513.51) limit within the project is KP 37.9/47.2 (PM 23.6/29.3) and the Lakeport Hydrologic Sub-Area (sub-area #513.55) limit is KP 47.2/50.9 (PM 29.3/31.6).

Receiving Water Bodies

Thurston Lake, Thurston Creek, and Pinkeye Lake are the nearest named water bodies which would receive onsite stormwater during 85th percentile and lower storm events; Thurston Lake is separated from Clear Lake by a volcanic ridge. Thurston Lake is a perennial water body which lies north of and outside the beginning project limits. Thurston Creek is an intermittent water body meandering extensively in a general south-to-north direction passing under existing and proposed Lake-29 roadway at two locations and under Lake-281 before turning toward the east and terminating at Thurston Lake. Thurston Lake and Creek collect approximately 75 percent of the project runoff. Pinkeye Lake is an intermittent water body which lies east of and outside the beginning project limits collecting runoff through small channels from impervious surfaces east of Diener Drive. There are also several existing unnamed intermittent and ephemeral ponding areas, streams and channels. Detailed hydrological features of this project can be found in the Drainage Report.

Proximity of closest project outfalls to water bodies receiving 85th percentile stormwater via flowline channels are as follows:

- Thurston Lake – 3.62 km (2.25 mi) located in Manning Flat
- Pink Eye Lake – 0.85km (0.53 mi) from the beginning of the project

- Thurston Creek – passes through the project at two locations 1st between Konocti Camp Rd and Eagle Nest Ln under SR 29 and 2nd north of SR 29/281 intersection under SR 281 (Soda Bay Rd)

McIntire Creek, Cole Creek, and Clear Lake could possibly receive onsite stormwater from the end of the project during heavy or sustained storm events. McIntire Creek is an intermittent water body west of the project end and outside the limits. Cole Creek is a perennial water body west of SR 175 and outside project limits. Clear Lake is a perennial water body north of the entire project and outside the project limits.

Onsite stormwater from the west most project outfall is intercepted by an unnamed existing perennial pond approximately 0.85 km (0.53mi) downstream. McIntire Creek, and subsequently Cole Creek and Clear Lake, will only receive stormwater from this project if storms have the intensity and duration to reach the pond's the overflow culvert. Proximity of the closest project outfall to the water bodies via flowline channels are as follows:

- McIntire Creek – 1.16 km (0.72 mi) from west most culvert at the project end via the overflow of the unnamed perennial pond
- Cole Creek – 1.93 km (1.20 mi) from west most culvert at the project end via the unnamed perennial pond overflow and McIntire Creek
- Clear Lake – 13.42 km (8.34 mi) from west most culvert at the project end via the unnamed perennial pond overflow, McIntire Creek, and then Cole Creek

2010 Clean Water Act 303(d) List

Thurston Lake and Pinkeye Lake are not identified on the Clean Water Act 303(d) listed water bodies. Thurston Creek, McIntire Creek, and Cole Creek are not listed as a Clean Water Act 303(d) listed water bodies, however Cole Creek does drain into Clear Lake which is a listed 303(d) water body for Nutrients and Mercury.

Total Maximum Daily Loads (TMDLs)

The CV-RWQCB has established TMDLs for Nutrients and Mercury for Clear Lake which runoff from the western end of the project may reach during heavy rains. Caltrans is identified in Nutrients TMDL Basin Plan amendment for the control of nutrients in Clear Lake with a waste load allocation of 100 kg of phosphorus per year for the 135 mile of State routes in the Clear Lake watershed (Reference CV-RWQCB Resolution No. R5-2006-0060). Caltrans is currently developing a plan to assess nutrient loading from highway water runoff in the Clear Lake watershed. Caltrans is not a responsible party for the Mercury TMDL.

Beneficial Uses

The CV-RWQCB has not designated any beneficial uses in the Basin Plan (RWQCB 1998) for Thurston Lake and the project has no water bodies that directly discharge into any of the listed CV-RWQCB Water Quality Objectives. For reference the two water bodies closest to the project are listed below:

- Cache Creek – Clear Lake: Agricultural Supply (AGR), Cold Fresh Water Habitat (COLD), Municipal and Domestic Supply (MUN), Water Contact Recreation (REC1), Non-Contact Water Recreation (REC2), Reproduction and/or Early Development (SPWN), Warm Fresh Water Habitat (WARM), Wildlife Habitat (WILD)
- Cache Creek – Clear Lake to Yolo Bypass: AGR, COLD, IND, MUN, Industrial Process Supply (PRO), REC1, REC2, SPWN, WARM, WILD

CWA Section 401 Water Quality Certification

Due to the large size of the project including widening of creek crossings, a Clean Water Act 401 Water Quality Certification is required from the CV-RWQCB. The 401 Certification will be prepared and submitted during PS&E.

Sensitive Issues

The archeological studies completed for this project have identified archeological sensitive areas within the project limits. These studies include maps identifying their findings.

Maps identifying areas of biological significance were prepared by Caltrans. These maps include location of endangered plants and locations of vegetation that is of great importance to local Native American tribes.

Level spreaders will be utilized in the Manning Flat area to protect endangered native plants by perpetuating existing sheet flow characteristics.

Whenever possible, sensitive areas will be protected with Environmentally Sensitive Area (ESA) fencing during construction.

Local Agency Requirements/Concerns

Stormwater from the proposed project will discharge into the Lake County Watershed Protection District jurisdiction. The proposed drainage and treatment design will be reviewed by the water districts during the design phase of the project.

Climate

The climate in Lake County is warm with dry summers and cool moist winters. For more detailed climate information please refer to Table 1.1. (National Climatic Data Center)

Table 1.1: 1981-2010 Normals for Clearlake 4 SE Station, NCDC

Season	Precipitation mm (IN)	Temperature °C (°F)		
		Minimum	Average	Maximum
Annual	798 (31.42)	5.5 (42.0)	13.8 (56.9)	22.1 (71.8)
Spring	188 (7.39)	4.5 (40.1)	12.3 (54.2)	20.1 (68.2)
Summer	9 (0.34)	11.7 (53.1)	21.6 (70.9)	31.5 (88.7)
Autumn	137 (5.38)	5.7 (42.2)	14.5 (58.1)	23.3 (74.0)
Winter	465 (18.31)	0.2 (32.4)	6.8 (44.2)	14.4 (56.0)

Rainfall Intensity Curves specific to the project limits are provided as Supplemental Attachments.

Topography

The average elevation of existing SR 29 is approximately 580 meters (1,903 feet). The terrain surrounding the project is mostly mountainous with interspersed small valleys, basins, and flats. The minor basins and flats create intermittent inundation areas. There are three major closed drainage basins:

- Thurston Creek and Lake—This primary drainage basin collects approximately 75 percent of the project area runoff. Thurston Creek originates in the mountains south of the project area and meanders primarily south to north, then heads east to Thurston Lake. Thurston Lake is at an elevation of 425 meters (1394 feet) and is separated from Clear Lake by a volcanic ridge.
- Shaul Valley—This secondary drainage basin consists of Shaul Valley and the surrounding hills. Intermittent and ephemeral flows in this basin are collected by a small unnamed drainage channel which flows north and eventually dissipates throughout the Shaul Valley floor.
- Pinkeye Lake—This tertiary drainage basin lies at the eastern end of the project area. This closed drainage basin is separated from the Thurston basin by Roundtop Mountain (elevation 696 meters or 2283 feet). Water flows from impervious surfaces east of Diener Drive through small channel into this closed drainage basin.

Geology and Soils

The Preliminary Geotech Report dated January 8, 2003 indicated that a variety of soil types occur within the project area ranging from clayey loam, gravelly sandy loam, to weathered and unweathered bedrock. Slopes widely vary from 0 to 75 percent and Hydrologic Soil Groups vary from A to D, with Group C being the majority according to the Natural Resources Conservation Service (NRCS) Custom Soils Resource Report for Lake County, California dated June 17th, 2015 (available upon request).

Aerially Deposited Lead and Naturally Occurring Asbestos

Analysis of soils within the project limits for Aerially Deposited Lead (ADL) and Naturally Occurring Asbestos (NOA) show detected levels as non-hazardous. Soils excavated containing ADL may be reused onsite or disposed of as non-hazardous soil; however a Lead Compliance Plan will be required for the contractors performing proposed construction excavation work due to elevated lead detected in individual samples. Engineering controls to minimize aerial dispersion of NOA is not required because soil samples were well below regulatory NOA thresholds and the observed geologic environment is not indicative of NOA.

Groundwater Information

According to the NRCS Custom Soils Resource Report for Lake County, California, the depth to water table is greater than 2.0 meters (6.7 feet) for most of the project site. It is acknowledged the water table may be shallower in vicinity of intermittent and perennial

streams. A thorough investigation will be performed during PS&E phase to determine if soil is suitable for attenuation/detention/infiltration basins to be constructed.

If groundwater is encountered during any excavations, the Caltrans Office of Environmental Engineering will be contacted regarding the handling and disposal of this water. If the water is to be discharged into any jurisdictional waters, appropriate dewatering procedures will be required to reduce or eliminate any potential discharge of pollutants to the maximum extent feasible. A project-specific Waste Discharge Permit may be required from the CV-RWQCB if substantial dewatering will take place. In the event that this project would affect groundwater, the groundwater will be tested for potential contamination, and a Special Provision will be prepared, if applicable, to ensure the proper handling and disposal of the groundwater.

Slope Stabilization

This project intends to utilize fill slopes varying from 1:2 (V:H) or flatter, expressway cut slopes from 1:1.5 (V:H) or flatter, and frontage road cut slopes from 1:2 (V:H) or flatter. Slope rounding will be applied the top of cut and bottom of fill slopes to minimize the formation of concentrated flows. Stepped slopes will be applied to long cut slopes on the expressway to increase adhesion of erosion control materials and improve vegetation establishment.

Sheet Flow

This project will prioritize sheet flow in areas such as Manning Flat to perpetuate existing hydraulic patterns to preserve a population of identified endangered plants. Caltrans proposes an engineered level spreader structure which will mimic existing hydraulic flow patterns in this area.

Erosion Potential

The soil erodibility factor, K, for the soils adjacent SR 29 weighted average is 0.37. The soil is generally more susceptible to erosion toward the eastern and western end of the project compared to the middle.

Risk Assessment

The R factor was determined from the EPA “Rainfall Erosivity Factor Calculator” to be 286.97; the K, as previously stated is 0.37; the LS factor was determined by examining the existing slopes and calculated to be 7.57. The product of these values are known as the Watershed Erosion Estimate and has been calculated to be 803.77 tons/acre. Because this value is more than 75, the project is classified as having a high sediment risk. See the attachments for the sediment risk factor input values.

The receiving water risk is classified as low because the indirectly discharged water to Clear Lake does not have an approved 303(d)-listed water body impaired by sediment. There is no approved USEPA TMDL implementation plan for sediment.

The combined high sediment risk and low receiving water risk results in the project being classified as Risk Level 2 (see Required Attachments).

Measures for Avoiding or Reducing Potential Storm Water Impacts

All work in creeks and waterways will be scheduled per regulatory requirements and will be detailed in the project's special provisions during the PS&E phase. Slope Stabilization treatments are discussed above. Concentrated flow will be collected in stabilized drains and channels with energy dissipaters at outlets and inlets. Proposed Treatment Best Management Practices (T-BMPs) consist of biofiltration swales and strips, and detention, attenuation, and infiltration basins.

There are no existing T-BMPs within the project limits.

Land Use

The land on both sides of the SR 29 is used for agricultural purposes with a few commercial establishments.

Right-of-Way (R/W) Requirements

New Right-of-Way (R/W) will be required to complete the project including areas for Design and Treatment BMPs (TBMPs). Permanent easements may be needed for maintenance access to the permanent BMPs. Temporary Construction Easements (TCEs) on multiple adjacent property owners will be necessary for construction staging, detours, and temporary haul roads. New utility corridors will encroach on the R/W of several property owners and Lake County R/W.

The additional cost of R/W is currently anticipated to be $27,000,000 for the entire project.

3. Regional Water Quality Control Board Agreements

Caltrans has an agreement with the CV-RWQCB to utilize aggressive and redundant erosion control BMPs in the Cache Creek watershed to control soil movement.

4. Proposed Design Pollution Prevention BMPs to be used on the Project.

Downstream Effects Related to Potentially Increased Flow, Checklist DPP-1, Parts 1 and 2

The project will add impervious surface area through roadway widening, and result in the creation of new cut and fill slopes. The increase in impervious area and new cut and fill slopes will increase the volume of roadway runoff. Existing impervious surface of SR 29 and vicinity within the project limits is approximately 13.1 hectares (32.4 acres). The preferred alternative with the signalized option at SR29/281 intersection will have a net increase of 33.6 hectares (83.0 acres) of paved surfaces, increasing the impervious surface area to 46.7 hectares (115.4 acres).

Cross culverts and ditches will be positioned to maintain existing hydrology and address potential negative downstream effects. Energy dissipating devices (such as flared end sections and rock energy dissipaters) are proposed at the inlets and outlets of all the culverts within the project limits to reduce flow velocity. Roadside drainage ditches and brow ditches

will be used in conjunction with three combination peak attenuation/water quality basins to control storm water runoff and prevent water quality degradation. When necessary, ditches will be lined with rock slope protection to dissipate energy and control erosion. The 10.8-meter (36 feet) wide grass portion of the median will be graded to drain into inlets connected to cross culverts where appropriate.

The existing downdrain adjacent to the current SR 29 alignment at KP 40.99 (PM 25.47) is proposed to be extended to the Manning Flat gulch floor with additional RSP placed from the outlet to the Caltrans Right of Way (approximately 60 ft from edge of pavement) to stabilize erosion.

Slope/Surface Protection Systems, Checklist DPP-1, Parts 1 and 3

Existing SR 29 within the project limits consist of both cut and fill sections. The existing cut sections range from 0.5 to 6 meters (1.5 to 20 feet) in height with side slopes ranging from 1:1 to 1:1.5 (V:H). The current fill sections range from 0.5 to 5 meters (1.5 to 17 feet) in height with side slopes from 1:1 to 1:2 (V:H). The slopes are vegetated with grasses and brush and appear to be performing favorably. Erosion problems appear to be minimal (Preliminary Geotechnical Report, July 25, 2006).

Area of cut and fill are required throughout the project to satisfy the proposed project geometry. Cut and fill areas for the project will be developed further during the design phase and will be shown on the contract plans. Proposed cut slopes are 1:1.5 (V:H) or flatter on the expressway and 1:2 (V:H) or flatter on frontage roads. All proposed fill slopes are 1:2 (V:H) or flatter. Temporary slopes for construction and traffic staging will be 1:1 or flatter. Slope rounding will be applied to final expressway slopes and stepping will be utilized on long cut slopes to reduce concentrated storm water flow and aid in re-establishing vegetation.

An area of rock slope protection (hard surface) is proposed along the foot of the fill slope between mainline stations 59+40 to 60+00 Left to protect it against the adjacent (parallel) flow of Thurston Creek.

Re-vegetated surfaces will utilize the seed mix design recommended by the Landscape Architect. The establishment rate for permanent vegetation is up to six months for grasses and three to five years for shrubs and trees.

Concentrated Flow Conveyance Systems, Checklist DPP-1, Parts 1 and 4

The proposed project will create and modify ditches, dikes, berms and swales. This project proposes 138 drainage systems within the project limits. Runoff from the project will be collected in ditches and biofiltration swales and directed to cross culverts. Top of cut ditches are proposed to intercept run-on from off-site sources and channel it to the nearest cross culvert.

Preservation of Existing Vegetation, Checklist DPP-1, Parts 1 and 5

The project will involve clearing and grubbing approximately 153.7 hectares (379.9 acres) for the preferred alternative. This alignment is designed to minimize disturbance to critical areas such as special status species, wetlands and other critical habitat. Environmentally Sensitive Area (ESA) fencing during construction will protect all preservation areas identified on project drawings.

5. Proposed Permanent Treatment BMPs to be used on the Project

In accordance with the July 2010 revision of the Project Planning and Design Guide (PPDG), this project must consider Permanent Treatment BMPs (Appendix B). This project discharges to surface water, is a major reconstruction, and will result in over one acre of new impervious surface. The project is not located within an MS4 (Water Quality Report, 2007; Addendum, 2016), however Lake County is designated as a Traditional Small MS4 (see Section 1).

Treatment BMP Strategy, Checklist T-1

There are no Targeted Design Constituents, and the project does not discharge directly to 303(d) listed or TMDL restricted water bodies. During sustained or heavy storm events greater than the 85th percentile water quality event, there is a potential to discharge to Clear Lake which has TMDL's for mercury and phosphorous (see Section 2). The current BMP for mercury and phosphorous is to control the movement of soil through aggresive and redundant erosion control BMPs.

This project is not within an urbanized area, therefore low impact earthen treatment BMPs will be given preference for deployment in accordance with current departmental policy.
The expectation is 100% of the Water Quality Volume (WQV) and Water Quality Flow (WQF) will be treated by implementing the following Permanent Treatment BMPs:

- Biofiltration Strips
- Biofiltration Swales
- Infiltration Devices
- Detention Devices
- Traction Sand Traps

The remaining types of treatment BMPs were considered infeasible for the following reasons:

- Dry Weather Diversion — there is no expected dry weather flows from Caltrans facilities and there are no sanitary sewers in the project limits
- Gross Solids Removal Devices — there is no TMDL or 303(d) receiving water body for trash or litter
- Media Filters, Multi-Chambered Treatment Trains, and Wet Basins — the project is located in a rural area.

For this project the alternate approved Treatment BMPs are Biofiltration Strips and Biofiltration Swales, then Detention Basins and Infiltration Basins, respectively. If Detention and Infiltration Basins are necessary they are proposed to be combined with attenuation basins to minimize soil disturbance. Earthwork to create separate Detention and Infiltration Basins is discouraged due to the potential of naturally occurring mercury in the soil. Therefore the primary form of treatment will be through Biofiltration Strips and Swales. This strategy will be further developed during PS&E.

Biofiltration Swales/Strips, Checklist T-1, Parts 1 and 2

Climate and site conditions allow for indigenous vegetation to be established according to the Landscape Architect and flow velocities will be below the scour velocity of 1.2 meters per second (4 fps). There will be adequate space within the new project right of way for biofiltration swales and strips. There is a potential low risk hazardous waste issue from station 66+00 to 74+50 along Amber Knolls Orchard due to underground fuel tanks which leaked as listed on the 2001 and 2002 Hazardous Waste Substances Site List. Case files on Amber Knolls property at Lake County have given site closure; regardless, this issue should not affect biofiltration strip operation due to the proximity and elevation relative to Amber Knolls property. Additionally on April 13th, 2004 a release of 300 gallons of gasoline to ground occurred during a construction accident while upgrading fuel station tanks at Kit's Corner located at the intersection of SR29/281; there should be no effect on biofiltration swale or strip performance due to their elevation and proximity upstream. Additional soils analysis will be conducted during PS&E phase to more accurately assess potential contamination impact at specific alignment locations. Therefore Biofiltration Swales and Strips are feasible for this project.

There are currently thirty-one Biofiltration Strips and nine Biofiltration Swales in the design at this phase of project development. Biofiltration Strip design elements are set to a flow length (perpendicular to roadway centerline) of 4.6 meters (15 ft) and width (parallel to roadway centerline) from 20 to 780 meters (67 to 2600 ft). The flow length is the minimum length and achieves 85% constituent filtration per the design guidance and is the maximum mowing width allowed by Maintenance due to machinery restriction. Biofiltration Swales can be an effective conveyance for any expected flow without causing scouring while still meeting the Hydraulic Residence Time, depth, and velocity requirements under Water Quality Flow conditions. Additionally the preliminary Swale designs have been concurred by Maintenance and will be placed in low cut sections to minimize animal burrowing.

Dry Weather Diversion, Checklist T-1, Parts 1 and 3

Dry Weather Diversion — there are no expected dry weather flows from Caltrans facilities and there are no sanitary sewers in the project limits.

Infiltration Devices – Checklist T-1, Parts 1 and 4

There is one combined Infiltration/Attenuation Basin proposed at "S" 115+20 Rt within R/W to be acquired. There are no influent limits on quality of water that can be infiltrated and infiltration would not pose a threat to groundwater quality according to the District NPDES

Coordinator. The nearest contamination source discussed in the Biofiltration Swales/Strips section is 3.7 Km away toward the south end of the project and thus does not pose a threat to infiltration water quality. Slopes widely vary from 0 to 75 percent and Hydrologic Soil Groups vary from A to D, with Group C being the majority according to the Natural Resources Conservation Service (NRCS) Custom Soils Resource Report for Lake County, California (June 17th, 2015). However the proposed locations for Infiltration Basins have slopes approximately 5% or less and infiltration should not compromise area slope integrity.

Current design elements meet the physical requirements of invert access, interior side slopes, freeboard, vegetation establishment, and flow diversion. However, detailed analysis of site specific issues such as soil type, groundwater elevation, in-hole conductivity, etc. will be conducted during PS&E.

Detention Devices, Checklist T-1, Parts 1 and 5

Two combined Detention/Attenuation Basins are proposed and an additional four feasible independent Detention Basins within the project right of way have been sited. Hydraulic head is sufficient to prevent backwater. The basins can be designed large enough to hold the Water Quality Volume and any excess traction sand. Groundwater elevation of the surrounding areas are greater than 3 meters below original ground according to the Preliminary Geotechnical Report; however, if groundwater is found to be less than 3 meters below a Detention Basin, then an impermeable liner will be incorporated.

Physical Detention Basin design elements currently meet requirements at this phase. Side slope rates are at 1:4. Freeboard is at least 0.3 meters for a WQV event. Preliminary design prevents inlet, WQV outlet, and overflow outlet from scouring. The lengths of the basins and storm water velocities are expected to prevent re-suspension of settled materials. Vegetation will be able to be established according to the Landscape Architect. Maintenance road access has been incorporated into current design.

Gross Solids Removal Devices (GSRDs), Checklist T-1, Parts 1 and 6

There is no TMDL or 303(d) receiving water body for trash or litter.

Traction Sand Traps, Checklist T-1, Parts 1 and 7

The District 1 Maintenance Supervisors for SR 29 and the Clear Lake area indicate traction sand is applied to SR 29 intermittently and on average twice per year, but mostly in select locations, namely between Diener Rd. and Manning's Flat and in the vicinity of Kit's Corner. However, the quantity of sand applied is only 6.8 and 11.3 tonnes per lane-mile, or 3.5 to 5.8 m3 per lane-mile, well below the volume discussed in the PPDG. After the traction sand is applied, it is allowed to disperse onto the roadside and a portion is collected by kick brooms and/or ditch cleaning operations. Traction Sand Traps are proposed in the Manning Flat area to minimize sediment in the vicinity of the endangered plants within the project limits. The remaining traction sand will be collected in the basins and swales which will be periodically cleaned out by Maintenance.

Media Filters, Checklist T-1, Parts 1 and 8

This project is not pursuing Media Filters as a Permanent Treatment BMPs. For this project the alternate approved Treatment BMPs are Biofiltration Swales, Detention Basins, Biofiltration Strips, and Traction Sand Traps respectively.

Multi-Chambered Treatment Trains (MCTTs), Checklist T-1, Parts 1 and 9

This project is not pursuing Multi-Chambered Treatment Trains (MCTTs) as a Permanent Treatment BMPs. For this project the alternate approved Treatment BMPs are Biofiltration Swales, Detention Basins, Biofiltration Strips, and Traction Sand Traps respectively.

Wet Basins, Checklist T-1, Parts 1 and 10

This project is not pursuing Wet Basins as a Permanent Treatment BMPs. For this project the alternate approved Treatment BMPs are Biofiltration Swales, Detention Basins, Biofiltration Strips, and Traction Sand Traps respectively.

6. Proposed Temporary Construction Site BMPs to be used on Project

Construction of the project is estimated to occur over 3 rainy seasons and administered under a Contractor-prepared SWPPP authorized by the Resident Engineer. Construction site BMPs will be considered in detail in the PS&E phase. Construction Site BMP strategy for this project will consist of the following soil stabilization and sediment controls: run-off control at the toe of all excavation and embankment slopes; slope protection and slope interruption devices placed on applicable slopes during the construction period; whenever possible, early implementation of permanent erosion control seeding or landscape planting shall be performed.

This project has been assigned a preliminary Risk Level Determination of 2 using the GIS Mapping Method 1, Appendix 1, of the Construction General Permit.

Temporary Stream Crossing, Checklist CS-1, Part 6

Where construction within the creek channel is anticipated, clear water diversion or dewatering will be used to protect water quality.

Concrete Waste Management, Checklist CS-1, Part 6

Concrete waste will be managed through proper implementation of concrete waste management.

Waste Management and Material Control, Checklist CS-1, Part 6

Various waste management, material handling, and other housekeeping BMPs will be applied throughout the duration of the project. Material stockpiles are anticipated and will be maintained with the appropriate BMPs.
The following temporary construction site BMPs are expected be designated as separate bid line items:

- Temporary Construction Entrance/Exit
- Temporary Concrete Washouts
- Temporary Drainage Inlet Protection
- Temporary Fiber Rolls
- Temporary Silt Fence
- Temporary Gravel Bag Berm
- Temporary Check Dam (or similar concentrated flow interrupter)
- Street Sweeping
- Move in/Move out (Temporary Erosion Control)
- Soil stabilization BMP (to be determined during PS&E)
- Temporary Fence (Type ESA)
- Temporary Sediment Trap BMP (to be designed during PS&E)
- Temporary Cover

Additional Temporary Construction BMPs to be listed as separate bid items include: Prepare SWPPP, REAP, SAP and Stormwater Annual Report. CGP fees are included in Supplemental, State Furnished.

The specific details and types or unforeseen Temporary Construction Site BMPs will be determined during design phase.

The attached Construction Site BMP Consideration Form documents construction concurrence in accordance with North Region Directives.

7. Maintenance BMPs (Drain Inlet Stenciling)

Lake County is designated by the CV-RWQCB as a Traditional Small MS4, though the project is not located within and MS4 (Water Quality Report, 2007; Addendum, 2016). Drain inlet stenciling is required in areas with pedestrian or bicycle access.

Attachments

Required:

- Vicinity Map
- Evaluation Documentation Form (EDF)
- Risk Level Determination Documentation
- Construction Site BMP Consideration Form
- NR Temporary BMP Cost Estimate

Supplemental: Not attached, see project file

- Plans showing Design BMP Deployment Drainage Sheets
- Checklist SW-1, Site Data Sources
- Checklist SW-2, Storm Water Quality Issues Summary
- Checklist SW-3, Measures for Avoiding or Reducing Potential Storm Water BMPs
- Checklists DPP-1, Parts 1–5 (Design Pollution Prevention BMPs) [only those parts that are applicable]
- Checklists T-1, Parts 1–10 (Treatment BMPs) [only those Parts that are applicable]

Additional:

- Rainfall Intensity Curves

Upon Request:

- NRCS Custom Soil Resource Report for Lake County, California

Required Attachments

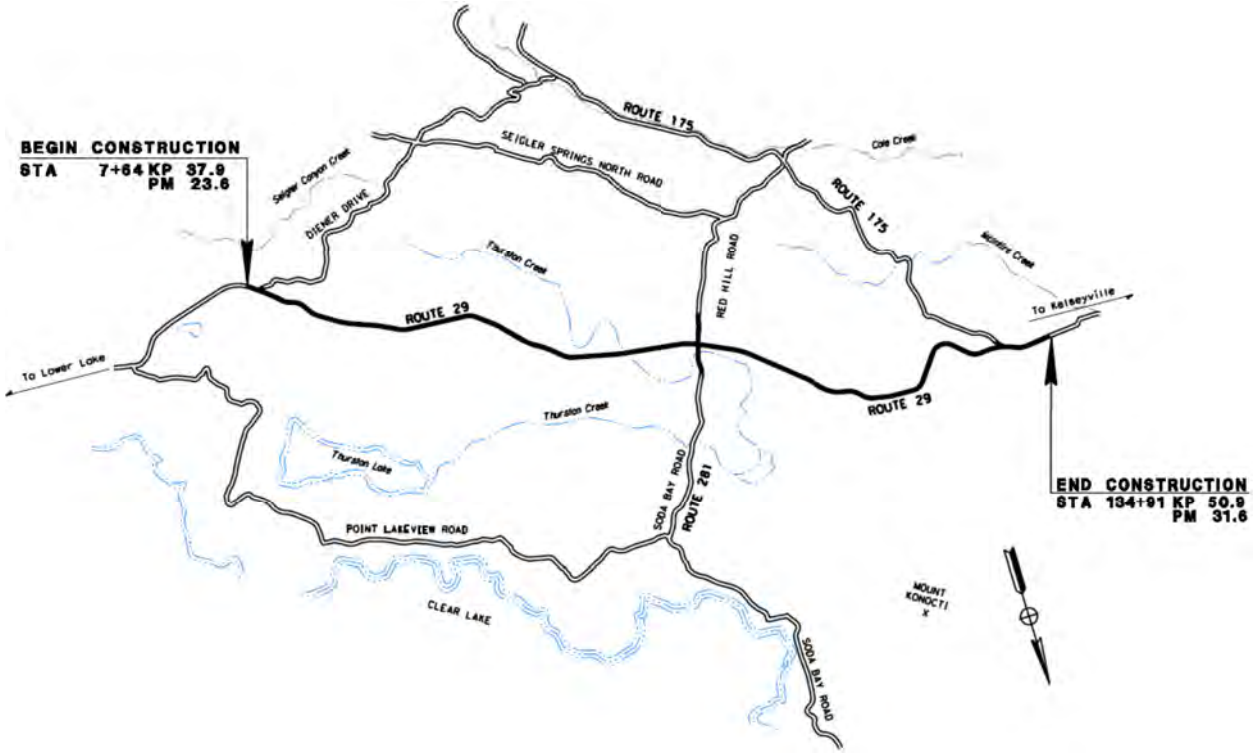
BEGIN CONSTRUCTION
STA 7+64 KP 37.9
PM 23.6
ROUTE 175
SEIGLER SPRINGS NORTH ROAD
Seigler Canyon Creek
DIENER DRIVE
Cole Creek
ROUTE 175
Thurston Creek
RED HILL ROAD
Kelsey Creek
To Kelseyville
ROUTE 29
To Lower Lake
ROUTE 29
Thurston Creek
Thurston Lake
SODA BAY ROAD
ROUTE 281
END CONSTRUCTION
STA 134+91 KP 50.9
PM 31.6
POINT LAKEVIEW ROAD
MOUNT KONOCTI
CLEAR LAKE
SODA BAY ROAD

DATE: 06/02/2015

Project ID (or EA): 0100000090 (01-2981U0)

NO.	CRITERIA	YES ✓	NO ✓	SUPPLEMENTAL INFORMATION FOR EVALUATION
1.	Begin Project Evaluation regarding requirement for consideration of Treatment BMPs	✓		See Figure 4-1, Project Evaluation Process for Consideration of Permanent Treatment BMPs. Go to 2
2.	Is this an emergency project?		✓	If **Yes**, go to 10. If **No**, continue to 3.
3.	Have TMDLs or other Pollution Control Requirements been established for surface waters within the project limits? Information provided in the water quality assessment or equivalent document.	✓		If **Yes**, contact the District/Regional NPDES Coordinator to discuss the Department's obligations under the TMDL (if Applicable) or Pollution Control Requirements, go to 9 or 4. SES *(Dist./Reg. SW Coordinator initials)* If **No**, continue to 4.
4.	Is the project located within an area of a local MS4 Permittee?	✓		If **Yes**. *(LAKE COUNTY)*, go to 5. If **No**, document in SWDR go to 5.
5.	Is the project directly or indirectly discharging to surface waters?	✓		If **Yes**, continue to 6. If **No**, go to 10.
6.	Is it a new facility or major reconstruction?	✓		If **Yes**, continue to 8. If **No**, go to 7.
7.	Will there be a change in line/grade or hydraulic capacity?	✓		If **Yes**, continue to 8. If **No**, go to 10.
8.	Does the project result in a net increase of one acre or more of new impervious surface?	✓		If **Yes**, continue to 9. If **No**, go to 10. *33.6 HA (83.0 AC) (Net Increase New Impervious Surface)*
9.	Project is required to consider approved Treatment BMPs.	✓		See Sections 2.4 and either Section 5.5or 6.5 for BMP Evaluation and Selection Process. Complete Checklist T-1 in this Appendix E.
10.	Project is not required to consider Treatment BMPs. _____*(Dist./Reg. Design SW Coord. Initials)* _____*(Project Engineer Initials)* _____ *(Date)*			Document for Project Files by completing this form, and attaching it to the SWDR.

R Factor Calculations

Figure 1.1: Rainfall Erosivity Factor

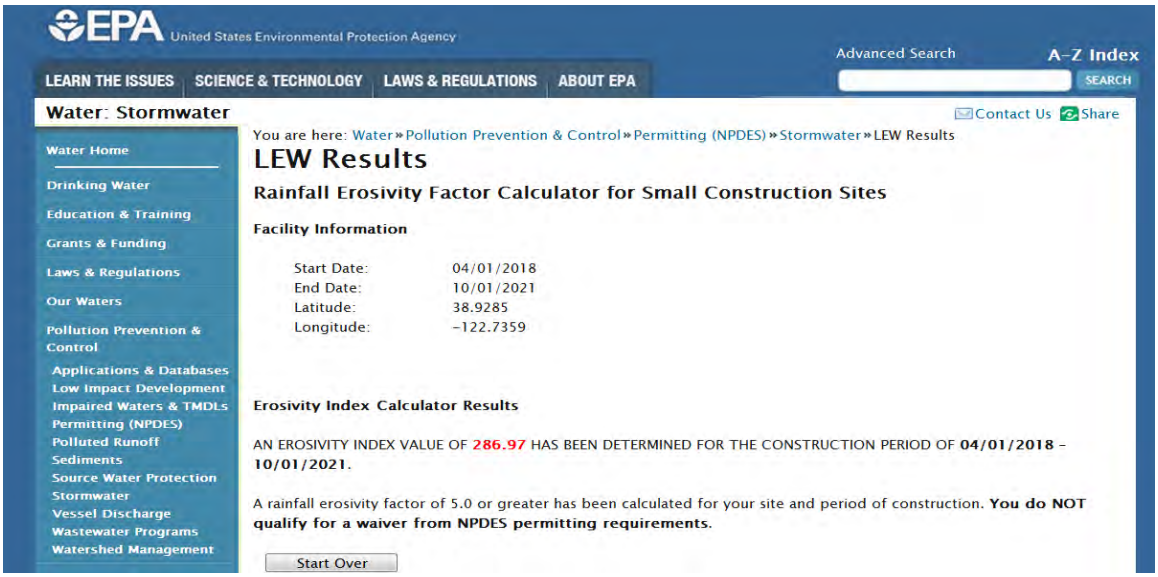

K Factor Resources

Figure 1.2: K Factor

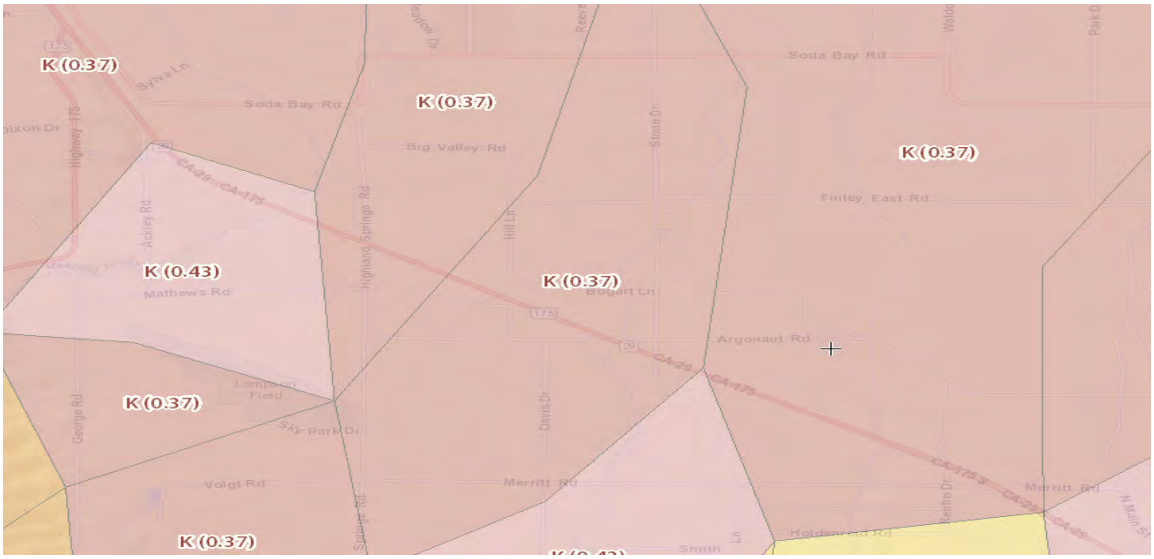

LS Factor Resources

Figure 1.3: LS Factor

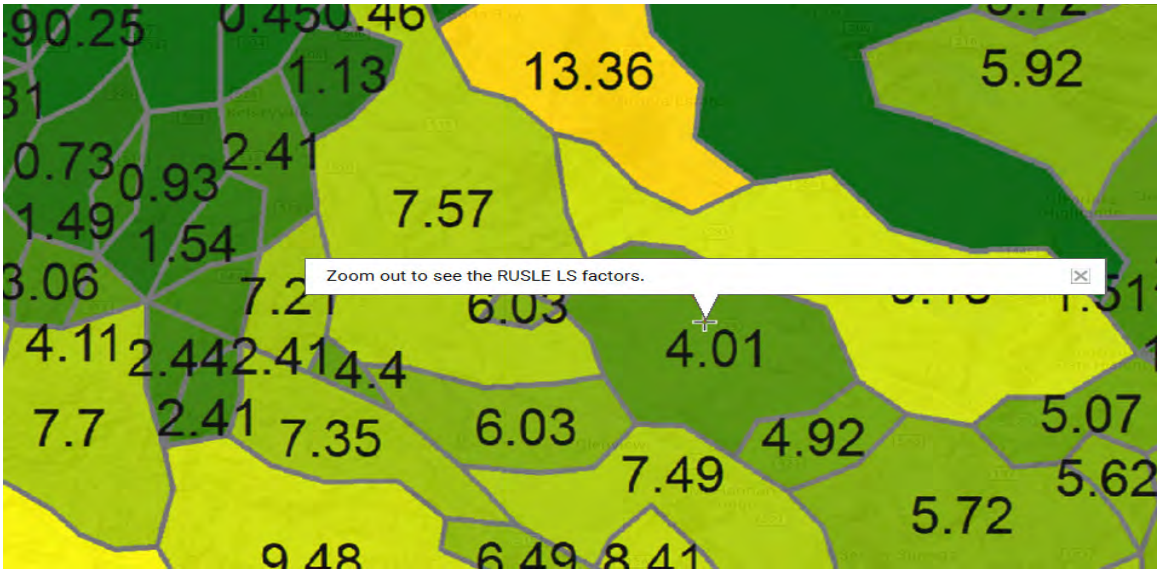

High Risk Receiving Watershed

Figure 1.4: High Risk Receiving Watershed

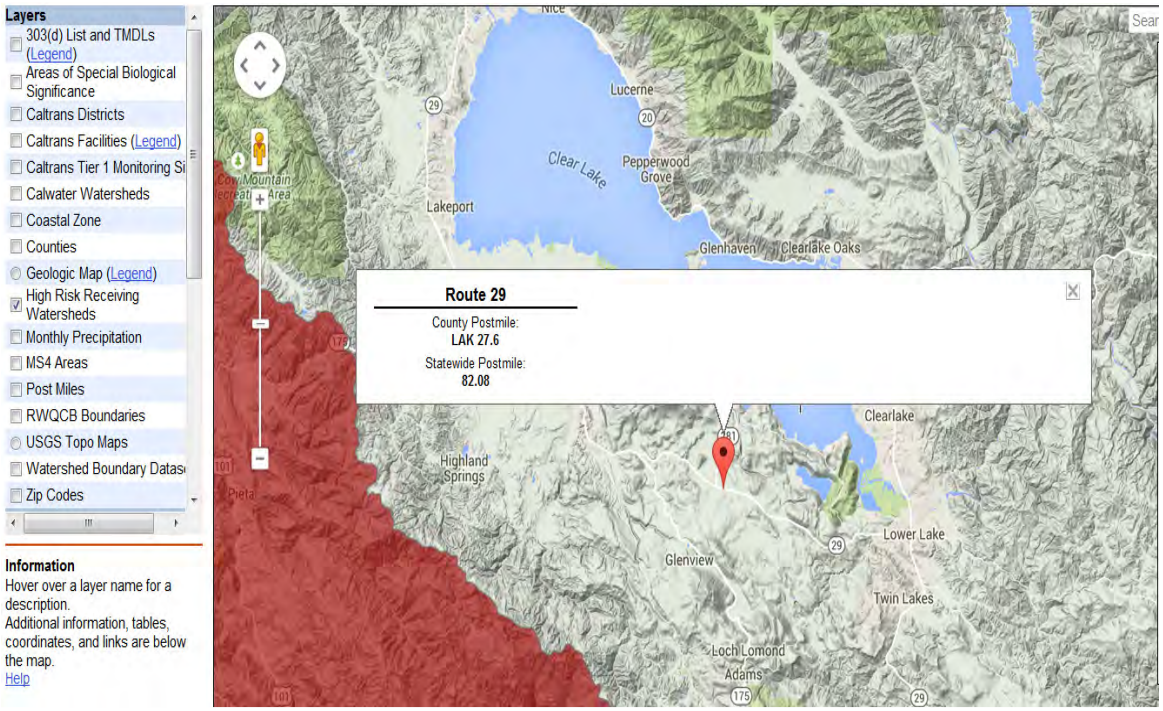

Sediment Risk (High)

Figure 1.5: Sediment Risk Factor Worksheet

Sediment Risk Factor Worksheet	Entry
A) R Factor	
Analyses of data indicated that when factors other than rainfall are held constant, soil loss is directly proportional to a rainfall factor composed of total storm kinetic energy (E) times the maximum 30-min intensity (I30) (Wischmeier and Smith, 1958). The numerical value of R is the average annual sum of EI30 for storm events during a rainfall record of at least 22 years. "Isoerodent" maps were developed based on R values calculated for more than 1000 locations in the Western U.S. Refer to the link below to determine the R factor for the project site.	
http://cfpub.epa.gov/npdes/stormwater/LEW/lewCalculator.cfm	
R Factor Value	286.97
B) K Factor (weighted average, by area, for all site soils)	
The soil-erodibility factor K represents: (1) susceptibility of soil or surface material to erosion, (2) transportability of the sediment, and (3) the amount and rate of runoff given a particular rainfall input, as measured under a standard condition. Fine-textured soils that are high in clay have low K values (about 0.05 to 0.15) because the particles are resistant to detachment. Coarse-textured soils, such as sandy soils, also have low K values (about 0.05 to 0.2) because of high infiltration resulting in low runoff even though these particles are easily detached. Medium-textured soils, such as a silt loam, have moderate K values (about 0.25 to 0.45) because they are moderately susceptible to particle detachment and they produce runoff at moderate rates. Soils having a high silt content are especially susceptible to erosion and have high K values, which can exceed 0.45 and can be as large as 0.65. Silt-size particles are easily detached and tend to crust, producing high rates and large volumes of runoff. Use Site-specific data must be submitted.	
Site-specific K factor guidance	
K Factor Value	0.37
C) LS Factor (weighted average, by area, for all slopes)	
The effect of topography on erosion is accounted for by the LS factor, which combines the effects of a hillslope-length factor, L, and a hillslope-gradient factor, S. Generally speaking, as hillslope length and/or hillslope gradient increase, soil loss increases. As hillslope length increases, total soil loss and soil loss per unit area increase due to the progressive accumulation of runoff in the downslope direction. As the hillslope gradient increases, the velocity and erosivity of runoff increases. Use the LS table located in separate tab of this spreadsheet to determine LS factors. Estimate the weighted LS for the site prior to construction.	
LS Table	
LS Factor Value	7.57
Watershed Erosion Estimate (=RxKxLS) in tons/acre	803.77
Site Sediment Risk Factor Low Sediment Risk: < 15 tons/acre Medium Sediment Risk: >=15 and <75 tons/acre High Sediment Risk: >= 75 tons/acre	**High**

Receiving Water Risk (Low)

Figure 1.6: Receiving Water (RW) Risk Factor Worksheet

Receiving Water (RW) Risk Factor Worksheet	Entry	Score
A. Watershed Characteristics	yes/no	
A.1. Does the disturbed area discharge (either directly or indirectly) to a **303(d)-listed waterbody impaired by sediment** (For help with impaired waterbodies please visit the link below) or has a **USEPA approved TMDL implementation plan for sediment**?: http://www.waterboards.ca.gov/water_issues/programs/tmdl/integrated2010.shtml	no	Low
OR		
A.2. Does the disturbed area discharge to a waterbody with designated beneficial uses of SPAWN & COLD & MIGRATORY? (For help please review the appropriate Regional Board Basin Plan) http://www.waterboards.ca.gov/waterboards_map.shtml		

Risk Level Determination (Level 2)

Figure 1.7: Combined Risk Level Matrix

Combined Risk Level Matrix				
		Sediment Risk		
		Low	Medium	High
Receiving Water Risk	Low	Level 1	Level 2	
	High	Level 2		Level 3
	Project Sediment Risk:		High	
	Project RW Risk:		Low	
	Project Combined Risk:		Level 2	

DATE: 11/22/2016

Project ID / EA: 01 0000 0090/01-2981U0

Project Evaluation Process for the Consideration of Construction Site BMPs

No.	Criteria	Yes ✓	No ✓	Supplemental Information
1.	Will construction of the project result in areas of disturbed soil as defined by the Project Planning and Design Guide (PPDG)?	✓		If Yes, Construction Site BMPs for Soil Stabilization (SS) will be required. Review CS-1, Part 1. Continue to 2. If No, Continue to 3.
2.	Is there a potential for disturbed soil areas within the project to discharge to storm drain inlets, drainage ditches, areas outside the RW, etc.?	✓		If Yes, Construction Site BMPs for Sediment Control (SC) will be required. Review CS-1, Part 2. Continue to 3.
3.	Is there a potential for sediment or construction related materials and wastes to be tracked offsite and deposited on private or public paved roads by construction vehicles and equipment?	✓		If Yes, Construction Site BMPs for Tracking Control (TC) will be required. Review CS-1, Part 3. Continue to 4.
4.	Is there a potential for wind to transport soil and dust offsite during the period of construction?	✓		If Yes, Construction Site BMPs for Wind Erosion Control (WE) will be required. Review CS-1, Part 4. Continue to 5.
5.	Is dewatering anticipated or will construction activities occur within or adjacent to a live channel or stream?	✓		If Yes, Construction Site BMPs for Non-Stormwater Management (NS) will be required. Review CS-1, Part 5. Continue to 6.
6.	Will construction include saw-cutting, grinding, drilling, concrete or mortar mixing, hydro-demolition, blasting, sandblasting, painting, paving, or other activities that produce residues?	✓		If Yes, Construction Site BMPs for Non-Stormwater Management (NS) will be required. Review CS-1, Parts 5 & 6. Continue to 7.
7.	Are stockpiles of soil, construction related materials, and/or wastes anticipated?	✓		If Yes, Construction Site BMPs for Waste Management and Materials Pollution Control (WM) will be required. Review CS-1, Part 6. Continue to 8.
8.	Is there a potential for construction related materials and wastes to have direct contact with precipitation; stormwater run-on, or stormwater runoff; be dispersed by wind; be dumped and/or spilled into storm drain systems?	✓		If Yes, Construction Site BMPs for Waste Management and Materials Pollution Control (WM) will be required. Review CS-1, Part 6.

Storm Water BMP Cost Summary & BMP Cost Information (extracted from Project Estimate)

I. ROADWAY ITEMS					
Section 3 Drainage					
	Quantity	Unit	Unit Price	Item Cost	Section Cost
Drainage-Basins/MAR/Biostrip/swales	1	LS	$ 765,000.00	$ 765,000	
	Subtotal Drainage:				$765,000
Section 4 Specialty Items					
	Quantity	Unit	Unit Price	Item Cost	Section Cost
Erosion Control (Type D)	99	LS	$ 35,500.00	$ 3,514,500	
Highway Planting	1	LS	$ 1,900,000.00	$ 1,900,000	
Slope Protection - Stepping	1	LS	$ 570,000.00	$ 570,000	
Prepare Storm Water Pollution	1	LS	$ 24,400.00	$ 24,400	
Construction Site BMP's (SWDR 1.5%)	1	LS	$ 8,965,000.00	$ 8,965,000	
	Subtotal Specialty Items:				$14,973,900
			Subtotal Sections 1 thru 5:		$15,738,900
Section 6 Minor items					
	Subtotal Section 1 thru 5 x 5% =			$786,945	
			Total Minor Items:		$786,945
	TOTAL SECTIONS 1 THRU 6				$16,525,845
Section 7 Roadway mobilization					
	Subtotal Section 1 thru 6 x 10%=			$1,652,585	
			Total Roadway Mobilization:		$1,652,585
Section 8 Roadway Additions					
Supplemental Work					
	Subtotal Section 1 thru 6 x 10%=			$1,652,585	
Contingencies					
	Subtotal Section 1 thru 6 x 20%=			$1,652,585	
			Total roadway Additions:		$3,305,169
	TOTAL ROADWAY ITEMS (SECTION 1 through 8)				**$21,483,599**
	CALL				**$21,500,000**

ATTACHMENT N
PROGRAMMING SHEET

PROGRAMMING SHEET

11/16/2016

EFIS ID: 0100000090 EA:01-2981U County: LAK Route: 029 PostMile: 23.80/31.60

Project Manager: MATTEOLI, JAIME C PM Assistant: FALK-CARLSEN, KARL Project Nickname: Lake 29 Expressway - STIP
Project Description - Long: IN LAKE COUNTY ON ROUTE 29 NEAR LOWER LAKE FROM 0.2 KM NORTH OF DIENER DRIVE TO 0.9 KM NORTH OF THE JUNCTION OF ROUTE 175 (KP38.3/50.8
Work Description - Long: UPGRADE TO 4 LANE EXPRESSWAY
PPNO: 0122C Program: stip-iip RTP: No Funding Candidate: No PROGRAM YR: 2017 Working Days:
Open for Time: No Subprogram: New Programming Interregional Improvement Pro CT Status: APL RMP: RMP Date:
10 Yr SHOPP: No AADD: No Dist Category: STIP PARTIALLY FUNDED FED Aid Eligible: YES

MS	MS Description	MS Date	
M000	ID NEED	07/01/1998	(A)
M015	PROG PROJ	07/01/1998	(A)
M020	BEGIN ENVIRO	07/01/2001	(A)
M030	NOP	02/04/2003	(A)
M035	NOI	07/10/2007	(A)
M040	BEGIN PROJ	07/01/2001	(A)
M120	CIRC DPR & DED EXT	06/29/2007	(A)
M200	PA & ED	12/01/2016	(T)
M221	RECEIVE COMPLETE BRIDGI	02/24/2016	(A)
M224	R/W REQTS	08/29/2016	(A)
M225	REGULAR R/W	12/01/2016	(T)
M275	GENERAL PLANS	04/02/2017	(T)
M377	PS&E TO DOE	10/01/2018	(T)
M378	DRAFT STRUC PS&E	07/15/2018	(T)
M380	PROJ PS&E	12/01/2018	(T)
M410	R/W CERT	12/15/2018	(T)
M460	RTL	01/15/2019	(T)
M480	HQ ADVERT	04/15/2019	(T)
M495	AWARD	07/20/2019	(T)
M500	APPROVE CONTRACT	08/03/2019	(T)
M600	CONTRACT ACCEPT	12/01/2022	(T)
M700	FINAL REPORT	12/01/2023	(T)
M800	END PROJ EXP	12/01/2024	(T)
M900	FINAL PROJ CLOSEOUT	09/01/2026	(T)

Capital Cost Estimates

	Amount $k	EST Date
Roadway	167,700	11/15/16
Structures	5,500	11/15/16
Const Total	173,200	
ROW	33,853	11/09/16
Total	207,053	

Env Doc: EA, EIR,

Funding Info ($k)

Fund Source	PA&ED	PS&E	ROW	CON	ROW Cap	CON CAP
2010025.700	**3,106**	**0**	**0**	**0**	**0**	**0**
2010075.600	**0**	**0**	**288**	**0**	**2,128**	**0**
2010400.200	**3,507**	**0**	**0**	**0**	**0**	**0**
2030010.680	**4,757**	**0**	**0**	**0**	**0**	**0**
Grand Total:	**11,370**	**0**	**288**	**0**	**2,128**	**0**

Capital Cost Estimates

	2019
CC Escalation %:	3.50%
CC Escalated $:	185,324
ROW CAPITAL:	37,481
TOTAL:	222,805

PROJECT SUPPORT COSTS

Phase	PRIOR	2017	2018	2019	2020	2021	Future	Total	Sup/Cap
Escalation Rate	ACT $	FTC	(1.50%)	(1.50%)	(1.50%)	(1.50%)	(1.50%)		
0	**13,289**	**0**	**0**	**0**	**0**	**0**	**0**	13,289	5.96%
1	**0**	**0**	**0**	**0**	**0**	**0**	**0**	0	0.00%
2	**289**	**0**	**0**	**0**	**0**	**0**	**0**	289	0.13%
							TOTAL SUPPORT COSTS:	13,578	6.09%
							TOTAL PROJECT COSTS:	236,383	

PROJECT SUPPORT PYs

	Division	PRIOR ACT PYs	2017 FTC PYs	2018 FTC PYs	2019 FTC PYs	2020 FTC PYs	2021 FTC PYs	Future FTC PYs	Total PYs
		63.28	0.00	0.00	0.00	0.00	0.00	0.00	63.28
	TOTALS:	63.28	0.00	0.00	0.00	0.00	0.00	0.00	63.28
01	ADMN	0.03	0.00	0.00	0.00	0.00	0.00	0.00	0.03
01	MTCE	0.01	0.00	0.00	0.00	0.00	0.00	0.00	0.01
01	PPM	0.23	0.00	0.00	0.00	0.00	0.00	0.00	0.23
01	TPLN	0.00	0.00	0.00	0.00	0.00	0.00	0.00	0.00
01	TROP	0.00	0.00	0.00	0.00	0.00	0.00	0.00	0.00
01	**TOTALS:**	0.27	0.00	0.00	0.00	0.00	0.00	0.00	0.27
03	CONS	0.39	0.00	0.00	0.00	0.00	0.00	0.00	0.39
03	ENVM	6.57	0.00	0.00	0.00	0.00	0.00	0.00	6.57
03	ESRV	0.34	0.00	0.00	0.00	0.00	0.00	0.00	0.34
03	PRJD	11.62	0.00	0.00	0.00	0.00	0.00	0.00	11.62
03	RWLS	0.57	0.00	0.00	0.00	0.00	0.00	0.00	0.57
03	SURV	1.17	0.00	0.00	0.00	0.00	0.00	0.00	1.17
03	TPLN	0.27	0.00	0.00	0.00	0.00	0.00	0.00	0.27
03	TROP	0.01	0.00	0.00	0.00	0.00	0.00	0.00	0.01
03	**TOTALS:**	20.94	0.00	0.00	0.00	0.00	0.00	0.00	20.94
59	GS	0.13	0.00	0.00	0.00	0.00	0.00	0.00	0.13
59	PPM	0.06	0.00	0.00	0.00	0.00	0.00	0.00	0.06
59	SCON	0.00	0.00	0.00	0.00	0.00	0.00	0.00	0.00
59	SDSN	0.32	0.00	0.00	0.00	0.00	0.00	0.00	0.32
59	SP&I	0.20	0.00	0.00	0.00	0.00	0.00	0.00	0.20
59	**TOTALS:**	0.72	0.00	0.00	0.00	0.00	0.00	0.00	0.72
PROJECT TOTALS:		**85.21**	**0.00**	**0.00**	**0.00**	**0.00**	**0.00**	**0.00**	**85.21**

Comments:

PROGRAMMING SHEET

11/18/2016

EFIS ID: 0114000044 EA:01-29821 County: LAK Route: 029 PostMile: 28.50/31.60

Project Manager: MATTEOLI, JAIME C PM Assistant: FALK-CARLSEN, KARL Project Nickname: LAK-29 Child STIP
Project Description - Long: IN LAKE COUNTY NEAR KELSEYVILLE FROM 0.6 MILE NORTH OF THE JUNCTION OF SR 29/281 TO 0.6 MILE NORTH OF THE JUNCTION OF SR 29/175
Work Description - Long: LAK-29 CHILD STIP
PPNO: 3100 Program: STIP RTP: No Funding Candidate: No PROGRAM YR: 2018 Working Days:
Open for Time: No Subprogram: STIP - Other Programs CT Status: APL RMP: RMP Date:
10 Yr SHOPP: No AADD: Yes Dist Category: STIP FULLY FUNDED FED Aid Eligible: YES

MS	MS Description	MS Date	
M015	PROG PROJ	07/01/1998	(A)
M020	BEGIN ENVIRO	07/01/2001	(A)
M120	CIRC DPR & DED EXT	05/24/2016	(A)
M200	PA & ED	12/01/2016	(T)
M221	RECEIVE COMPLETE BRIDGI	02/24/2016	(A)
M224	R/W REQTS	08/29/2016	(A)
M225	REGULAR R/W	12/01/2016	(T)
M275	GENERAL PLANS	04/02/2017	(T)
M377	PS&E TO DOE	10/01/2018	(T)
M378	DRAFT STRUC PS&E	07/15/2018	(T)
M380	PROJ PS&E	12/01/2018	(T)
M410	R/W CERT	12/15/2018	(T)
M460	RTL	01/15/2019	(T)
M480	HQ ADVERT	04/15/2019	(T)
M495	AWARD	07/20/2019	(T)
M500	APPROVE CONTRACT	08/03/2019	(T)
M600	CONTRACT ACCEPT	12/01/2022	(T)
M700	FINAL REPORT	12/01/2023	(T)
M800	END PROJ EXP	12/01/2024	(T)
M900	FINAL PROJ CLOSEOUT	09/01/2026	(T)

Capital Cost Estimates

	Amount $k	EST Date
Roadway	22,027	10/24/16
Structures	0	10/24/16
Const Total	22,027	
ROW	1,846	04/14/16
Total	23,873	

Env Doc: EA, EIR,

Funding Info ($k)

Fund Source	PA&ED	PS&E	ROW	CON	ROW Cap	CON CAP
2010025.700	**0**	**750**	**150**	**1,000**	**0**	**0**
2010075.600	**0**	**750**	**150**	**1,000**	**0**	**0**
2020025.700	**0**	**0**	**0**	**0**	**0**	**11,160**
2020075.600	**0**	**0**	**0**	**0**	**2,000**	**10,867**
Grand Total:	**0**	**1,500**	**300**	**2,000**	**2,000**	**22,027**

Capital Cost Estimates

	2019
CC Escalation %:	3.50%
CC Escalated $:	23,569
ROW CAPITAL:	2,000
TOTAL:	25,569

PROJECT SUPPORT COSTS

Phase Escalation Rate	PRIOR ACT $	2017 FTC	2018 (1.50%)	2019 (1.50%)	2020 (1.50%)	2021 (1.50%)	Future (1.50%)	Total	Sup/Cap
1	**0**	**391**	**743**	**381**	**8**	**0**	**0**	1,522	5.95%
2	**0**	**57**	**97**	**55**	**18**	**18**	**64**	309	1.21%
3	**0**	**0**	**0**	**0**	**510**	**570**	**1,047**	2,127	8.32%
							TOTAL SUPPORT COSTS:	3,958	15.48%
							TOTAL PROJECT COSTS:	29,527	

PROJECT SUPPORT PYs

	Division	PRIOR ACT PYs	2017 FTC PYs	2018 FTC PYs	2019 FTC PYs	2020 FTC PYs	2021 FTC PYs	Future FTC PYs	Total PYs
01	MTCE	0.00	0.00	0.00	0.00	0.00	0.00	0.00	0.01
01	PPM	0.00	0.05	0.09	0.09	0.05	0.04	0.14	0.46
01	TROP	0.00	0.02	0.04	0.03	0.00	0.00	0.00	0.08
01	**TOTALS:**	0.00	0.07	0.13	0.12	0.05	0.04	0.14	0.55
03	CONS	0.00	0.01	0.03	0.06	1.70	1.87	3.26	6.94
03	ENVM	0.00	0.12	0.20	0.18	0.06	0.07	0.21	0.84
03	ESRV	0.00	0.14	0.27	0.22	0.01	0.01	0.02	0.67
03	PRJD	0.00	0.80	1.54	0.64	0.00	0.00	0.00	2.98
03	RWLS	0.00	0.24	0.41	0.21	0.06	0.06	0.19	1.16
03	SURV	0.00	0.20	0.34	0.18	0.07	0.08	0.18	1.06
03	**TOTALS:**	0.00	1.51	2.80	1.50	1.90	2.08	3.87	13.64
59	GS	0.00	0.12	0.26	0.08	0.01	0.01	0.02	0.50
59	METS	0.00	0.01	0.02	0.00	0.06	0.06	0.09	0.24
59	OE	0.00	0.00	0.00	0.04	0.01	0.00	0.00	0.05
59	PPM	0.00	0.00	0.00	0.00	0.00	0.00	0.00	0.01
59	SCON	0.00	0.01	0.01	0.01	0.10	0.11	0.17	0.41
59	SDSN	0.00	0.18	0.30	0.08	0.01	0.00	0.01	0.59
59	SP&I	0.00	0.01	0.01	0.00	0.00	0.00	0.01	0.04
59	**TOTALS:**	0.00	0.33	0.60	0.22	0.19	0.19	0.31	1.84
PROJECT TOTALS:		**0.00**	**1.91**	**3.52**	**1.84**	**2.13**	**2.31**	**4.32**	**16.03**

Comments:

PROGRAMMING SHEET

11/18/2016

EFIS ID: 0114000043 EA:01-29811 County: LAK Route: 029 PostMile: 28.50/31.60

Project Manager: MATTEOLI, JAIME C PM Assistant: FALK-CARLSEN, KARL Project Nickname: Lake 29 Expressway - Safety
Project Description - Long: IN LAKE COUNTY NEAR KELSEYVILLE FROM 0.6 MILE NORTH OF THE JUNCTION OF SR 29/281 TO 0.6 MILE NORTH OF THE JUNCTION OF SR 29/175
Work Description - Long: Improve Curve and Upgrade Shoulders
PPNO: 3099 Program: shopp RTP: No Funding Candidate: No PROGRAM YR: 2018 Working Days:
Open for Time: Yes Subprogram: Safety Improvements CT Status: APL RMP: RMP Date:
10 Yr SHOPP: No AADD: Yes Dist Category: SHOPP MAJOR FED Aid Eligible: YES

MS	MS Description	MS Date	
M000	ID NEED	10/25/2013	(A)
M010	APPROVE PID	01/17/2014	(A)
M015	PROG PROJ	01/17/2014	(A)
M020	BEGIN ENVIRO	07/01/2001	(A)
M030	NOP	02/04/2002	(A)
M035	NOI	07/10/2007	(A)
M040	BEGIN PROJ	07/01/2001	(A)
M120	CIRC DPR & DED EXT	05/24/2016	(A)
M200	PA & ED	12/01/2016	(T)
M221	RECEIVE COMPLETE BRIDGI	02/24/2016	(A)
M224	R/W REQTS	08/29/2016	(A)
M225	REGULAR R/W	12/01/2016	(T)
M275	GENERAL PLANS	04/02/2017	(T)
M377	PS&E TO DOE	10/01/2018	(T)
M378	DRAFT STRUC PS&E	07/15/2018	(T)
M380	PROJ PS&E	12/01/2018	(T)
M410	R/W CERT	12/15/2018	(T)
M460	RTL	01/15/2019	(T)
M480	HQ ADVERT	04/15/2019	(T)
M495	AWARD	07/20/2019	(T)
M500	APPROVE CONTRACT	08/03/2019	(T)
M600	CONTRACT ACCEPT	12/01/2022	(T)
M700	FINAL REPORT	12/01/2023	(T)
M800	END PROJ EXP	12/01/2024	(T)
M900	FINAL PROJ CLOSEOUT	09/01/2026	(T)

Capital Cost Estimates

	Amount $k	EST Date
Roadway	39,346	10/24/16
Structures	1,750	10/24/16
Const Total	41,096	
ROW	11,459	04/14/16
Total	52,555	

Env Doc: EA, EIR,

Funding Info ($k)

Fund Source	PA&ED	PS&E	ROW	CON	ROW Cap	CON CAP
2010201.010	**4,000**	**2,500**	**700**	**2,000**	**0**	**0**
2020201.010	**0**	**0**	**0**	**0**	**3,000**	**34,000**
4050201.010	**0**	**0**	**0**	**0**	**0**	**0**
Grand Total:	**4,000**	**2,500**	**700**	**2,000**	**3,000**	**34,000**

Capital Cost Estimates

	2019
CC Escalation %:	3.50%
CC Escalated $:	43,973
ROW CAPITAL:	12,416
TOTAL:	56,389

PROJECT SUPPORT COSTS

Phase Escalation Rate	PRIOR ACT $	2017 FTC	2018 (1.50%)	2019 (1.50%)	2020 (1.50%)	2021 (1.50%)	Future (1.50%)	Total	Sup/Cap
0	**2,832**	**1,411**	**0**	**0**	**0**	**0**	**0**	4,243	7.52%
1	**0**	**1,017**	**1,786**	**995**	**23**	**0**	**0**	3,821	6.78%
2	**74**	**335**	**574**	**329**	**120**	**122**	**421**	1,977	3.51%
3	**0**	**0**	**0**	**0**	**1,842**	**2,061**	**3,680**	7,583	13.45%
							TOTAL SUPPORT COSTS:	17,624	31.25%
							TOTAL PROJECT COSTS:	74,013	

PROJECT SUPPORT PYs

	Division	PRIOR ACT PYs	2017 FTC PYs	2018 FTC PYs	2019 FTC PYs	2020 FTC PYs	2021 FTC PYs	Future FTC PYs	Total PYs
		0.44	0.00	0.00	0.00	0.00	0.00	0.00	0.44
	TOTALS:	0.44	0.00	0.00	0.00	0.00	0.00	0.00	0.44
01	ADMN	0.25	0.00	0.00	0.00	0.00	0.00	0.00	0.25
01	MTCE	0.00	0.01	0.01	0.01	0.00	0.00	0.00	0.02
01	PPM	0.04	0.12	0.21	0.21	0.12	0.11	0.37	1.18
01	TROP	0.02	0.15	0.09	0.08	0.00	0.00	0.00	0.33
01	**TOTALS:**	0.32	0.28	0.30	0.30	0.12	0.11	0.37	1.78
03	CONS	0.17	0.12	0.07	0.15	4.46	4.91	8.51	18.38
03	ENVM	3.30	1.09	0.52	0.45	0.16	0.17	0.55	6.24
03	ESRV	0.21	1.18	0.63	0.55	0.01	0.01	0.06	2.65
03	PRJD	6.82	3.24	3.77	1.87	0.35	0.36	1.14	17.55
03	RWLS	0.74	1.39	2.30	1.23	0.34	0.34	1.13	7.45
03	SURV	0.98	0.74	1.20	0.65	2.02	2.21	3.48	11.29
03	TPLN	0.09	0.01	0.00	0.00	0.00	0.00	0.00	0.10
03	TROP	0.00	0.01	0.00	0.00	0.00	0.00	0.00	0.01
03	**TOTALS:**	12.31	7.78	8.49	4.89	7.34	8.00	14.87	63.68
42	LEGL	0.00	0.02	0.00	0.00	0.00	0.00	0.00	0.02
42	**TOTALS:**	0.00	0.02	0.00	0.00	0.00	0.00	0.00	0.02
59	GS	0.28	3.48	0.59	0.19	0.02	0.02	0.06	4.64
59	METS	0.00	0.03	0.04	0.01	0.14	0.16	0.23	0.62
59	OE	0.00	0.00	0.00	0.09	0.02	0.00	0.00	0.12
59	PPM	0.09	0.04	0.01	0.01	0.00	0.00	0.01	0.16
59	SCON	0.02	0.05	0.03	0.03	0.25	0.27	0.44	1.09
59	SDSN	0.10	0.47	0.74	0.20	0.03	0.01	0.03	1.59
59	SP&I	0.00	0.03	0.02	0.01	0.01	0.01	0.03	0.12
59	**TOTALS:**	0.50	4.11	1.44	0.54	0.48	0.48	0.80	8.34

EFIS ID: 0114000043 EA:01-29811 County: LAK Route: 029 PostMile: 28.50/31.60

PROJECT TOTALS:	**13.56**	**12.18**	**10.24**	**5.72**	**7.94**	**8.59**	**16.03**	**74.26**

Comments:

01-LAK-29
PM 23.6/31.6
01-2981U0
01 0000 0090

ATTACHMENT O
RISK MANAGEMENT PLAN

STATE OF CALIFORNIA – DEPARTMENT OF TRANSPORTATION

RISK REGISTER CERTIFICATION (ACCOUNTABILITY CHECKPOINTS)

Form PM-0001 (Rev. 3/2014)

The risk register is to be approved and signed-off by the district deputies* listed below for all scalability levels. By signing this form, you are certifying that you have reviewed the risks documented in the register and agree that they have been managed to the extent possible by the PDT.

Project Information	☒ Capital Project ☐ Major Maintenance Project (Check One)
Project ID/District-EA	0100000091 / 01-2981U
Project Description	Lake 29 Expressway - STIP
Project Manager (PM)	Jaime Matteoli
Project Risk Manager (for Risk Level 3 Projects)	

☐ No Risk Register Certification Required – Sign below and submit this form with PID, PA&ED, PS&E submittal, and RE Handoff File (as applicable).

Project Manager Signature _____ Date: _____

PID (Required for Capital Projects Only excluding Minor Projects)		
Project Manager		Date:
Deputy District Director, Planning		Date:
Deputy District Director*, Design**		Date:
Deputy District Director*, Construction		Date:
Deputy District Director*, Right of Way		Date:
Deputy District Director*, Environmental		Date:
Deputy District Director*, Maintenance		Date:
Deputy District Director, Project Management		Date:

PA&ED (Required for Capital Projects Only)		
Project Manager		Date: 11/21/16
Deputy District Director, Planning		Date 11/21/16
Deputy District Director*, Design**	Steven R. Ambler	Date. 11/29/16
Deputy District Director*, Construction		Date. 11-21-16
Deputy District Director*, Right of Way		Date 11-21-16
Deputy District Director*, Environmental		Date 11-21-16
Deputy District Director*, Maintenance		Date 11/21/16
Deputy District Director, Project Management**		Date: 11/18/16

Prior to PS&E (Required for Capital Projects and Major Maintenance Projects)		
Project Manager		Date:
Deputy District Director, Planning		Date:
Deputy District Director*, Design		Date:
Deputy District Director*, Construction		Date:
Deputy District Director*, Right of Way		Date:
Deputy District Director*, Environmental		Date:
Deputy District Director*, Maintenance		Date:
Deputy District Director, Project Management		Date:

RE File Hand-off (Recommended for Capital Projects and Major Maintenance Projects)		
Project Manager		Date:
Deputy District Director*, Design		Date:
Deputy District Director*, Construction		Date
Deputy District Director*, Environmental		Date
Deputy District Director, Project Management		Date

*or the respective Project Delivery Division Chief signatures in the North Region

LEVEL 2 - RISK REGISTER				PA&ED - LAK-29 (8-Mile, Four-Lane Expressway)			DIST- EA: 01-2981U		Project Manager: Jaime Matteoli							
Risk Identification							Risk Assessment						Risk Response			
Status	ID #	Type	Category	Title	Risk Statement	Current status/assumptions	Probability	Cost Impact	Cost Score	Time Impact	Time Score	Rationale	Strategy	Response Actions	Risk Owner	Updated
Active	20	Threat	Envr	**CDFW Concerns - 1600 Permit**	CDFW provided a response letter to the environmental document that contained some fundamental disagreements. Because of CDFW concerns about the environmental documents, the 1600 permit could be delayed, which would delay project delivery. Another potential result of CDFW concerns could be concessions that increase mitigation costs.	Caltrans provided a response to CDFW that disagrees with many of the CDFW recommendations. The PDT expects that coordination with CDWF will need to be elevated to reach resolution.	2-Low	4 -Moderate	8	8 -High	16	Lack of agreement on the 1600 permit could delay RTL.	Mitigate	The PDT will engage CDFW as early as possible and will elevate issues that can't be resolved at lower levels.	Environmental	October, 2016
Active	30	Threat	Envr	**Preconstruction Surveys**	Because the preconstruction biological surveys are required for areas where property owners did not provide access, there is a possibility that unforeseen potential impacts to sensitive species could be discovered, which could increase mitigation costs and delay construction.	The assumption is that there is a low probability of finding any potential impacts to sensitive species during pre-construction surveys.	2-Low	4 -Moderate	8	8 -High	16	Additional studies could delay RTL.	Accept	The PDT will accept this risk.	Environmental	October, 2016
Active	40	Threat	Design	**Geotech**	Because the geotechnical investigation is not complete, the initial assumption to use 1.5:1 cut slopes may not be valid. This could increase cost and schedule, if flatter slopes are required. More R/W may be required for flatter slopes.	This volcanic area has a high diversity of soil types. It is currently assumed that all cuts will be stable at 1.5:1. Geotechnical investigations should begin in Spring of 2017 and are expected to be completed by Fall of 2017.	3-Moderate	8 -High	24	4 -Moderate	12	Slopes in the area over 20 feet high tend to be unstable at 1.5:1.	Mitigate	Design will work with Geotech to identify any areas with high potential of failure at 1.5:1. Design has also incorporated stepped slopes to help mitigate these types of failures.	Design	October, 2016
Active	50	Threat	Envr	**Cultural - Access to Angelica Harvesting Sites**	Big Valley Rancheria has cited an oral history of harvesting angelica and holding ceremonies within the project location. Caltrans is working on solutions to perpetuate access to Angelica. If Caltrans does not find a timely solution, then the broader tribal coordination effort could be harmed which could delay RTL or construction.	There are several known and well studied archeological sites within existing right of way and within new proposed right of way. The PDT is investigating the various options of providing access to angelica within the project area.	3-Moderate	4 -Moderate	12	4 -Moderate	12		Mitigate	The PDT is developing potential solutions and is working to vet these as soon as possible.	Design, Envr, R/W, and PM	October, 2016
Active	60	Threat	Envr	**Mitigation**	Because it is known that CDWF has concerns about the DED, CDFW could require significant changes to our mitigation plans during the permitting phase, which would require more studies and increase support costs and the capital cost for mitigation.	The project alternatives have been studied and mitigation is explained in the ED. The regulatory agencies have been informally consulted regarding the project's impacts and the plans for mitigation.	3-Moderate	4 -Moderate	12	4 -Moderate	12		Mitigate	The PDT will engage CDFW as early as possible and will elevate issues that can't be resolved at lower levels.	Envr / PM / Landscaping	October, 2016
Active	70	Threat	Right of Way	**Utility Relocation - Construction Impacts**	Because the utility relocation is large in scale, there is a possibility that the utility companies cannot relocate their utilities before construction on the highway project begins. If this occurs, then the utility relocations will occur concurrently with roadway work, resulting in an increase of construction costs and complexity.	The PDT coordinated with Utility companies during PA&ED. The current relocation schedule, which was shared with the utility companies, has utility relocation completed the season before roadway construction begins.	3-Moderate	2 -Low	6	4 -Moderate	12		Mitigate	Design will continue to work with the utility companies during the design phase as much as possible. This will help the utility companies prepare for relocation and hopefully shorten their design and relocation times.	Design	October, 2016
Active	80	Threat	Right of Way	**Utility Corridor Impacts**	Substantial changes to the initially proposed/planned utility corridor may be necessary during PS&E, which could require mitigation for unavoidable environmental impacts. The project schedule could be delayed and/or additional funding could be necessary.	The PDT initiated early coordination with all utilities. Conflict maps and project base map data were provided to utility companies. Currently the PDT assumes that proposed utility corridor will be used. Utility companies provided conceptual plans in October 2016 that indicate that the utility companies have generally agreed to use the proposed utility corridor.	2-Low	4 -Moderate	8	4 -Moderate	8		Mitigate	Design (and PDT) will meet and discuss the utility requirements (Relocation Plan) with the utility companies ASAP, prior to beginning of PS&E Phase, to identify relocation routes and potential conflicts.	Design, Envr , R/W and PM	October, 2016
Active	90	Threat	Programming	**Cost Increase Support**	The project capital cost estimate has increased above the programmed amount. If the cost increases is not supported by District and Headquarters program managers, the project scope could be adjusted to such an extent that the project schedule would be greatly delayed.	The current cost estimate is an accurate reflection of the scope of the preferred alternative, which meets the purpose and need of the project.	2-Low	2 -Low	4	16 - Very High	32	A major scope change could require considerable new work for all functional units and possibly recirculation of the environmental document.	Avoid	Project management will work with program managers to gain support if possible for the cost increases. If supported, a PCR will document the approved cost increase.	PM , Design	October, 2016

LEVEL 2 - RISK REGISTER				PA&ED - LAK-29 (8-Mile, Four-Lane Expressway)			DIST- EA: 01-2981U		Project Manager: Jaime Matteoli							
Risk Identification							Risk Assessment						Risk Response			
Status	ID #	Type	Category	Title	Risk Statement	Current status/assumptions	Probability	Cost Impact	Cost Score	Time Impact	Time Score	Rationale	Strategy	Response Actions	Risk Owner	Updated
Active	100	Threat	Design	**Freeway Agreement with Lake County**	The project requires a freeway agreement that will need the support of Lake County. The project involves relinquishment of frontage roads that Lake County has expressed concerns about. If the County does not sign the FA, then right of way acquisitions will be delayed which would delay RTL.	The Design team held a meeting with Lake County in late October 2016, and the County did not raise any major concerns about signing the freeway agreement.	2-Low	2 -Low	4	4 -Moderate	8	The FA is only an agreement to take the roads, and the relinquishment agreement will be executed during Construction.	Mitigate	Design will mitigate the risk by continuing communications with Lake County. Communication with Lake APC may also be initiated.	Design	October, 2016
Active	110	Threat	Envr	**Cultural Process/Timing**	Caltrans is coordinating with Big Valley Rancheria on a Late Discovery Plan. Tribal coordination on this project is complex and requires the support of many stakeholders, both internal and external. If we do not come to a timely agreement on the Late Discovery Plan, then there could be delays to the archeological process, which would ultimately delay RTL.	The PDT has met with the Tribal Council on the project and is working with the THPO on the Late Discovery Plan. A major concern the tribe has shared is the ability to have access to angelica harvesting locations within project limits and the concern of protecting a location with an oral history of tribal ceremonies. See Risk 50. It is assumed that resolution of the angelica and ceremony site issues will benefit the overall tribal coordination efforts.	2-Low	2 -Low	4	4 -Moderate	8		Mitigate	The project Archeologist and the archeological contractor will continue to work closely with the tribe on the Late Discovery Plan.	PDT	October, 2016
Active	115	Threat	Construction	**Obsidian fragments**	The project area contains naturally occurring cobbles of obsidian that are fractured in patterns that look similar to culturally modified flaked stone debitage. It is difficult for archeologists to quickly identify whether or not these obsidian cobbles are natural or manmade and thus culturally significant. Because of this, if Caltrans does not develop a robust plan to work with the tribal monitors during construction (the Late discovery Plan), then earthwork operations could be greatly delayed by investigations that may prove to be unneeded. These delays could extend the number of working delays and result in cost overruns and a potential need to request additional funds for construction.	The PDT has met with the Big Valley Rancheria Tribal Council on the project and is working with the THPO on the Late Discovery Plan. A major concern the tribe has shared is the ability to have access to angelica harvesting locations within project limits and the concern of protecting a location with an oral history of tribal ceremonies. See Risk 50. It is assumed that resolution of the angelica and ceremony site issues will benefit the overall tribal coordination efforts.	2-Low	4 -Moderate	8	4 -Moderate	8		Mitigate	The project Archeologist and the archeological contractor will continue to work closely with the tribe on the Late Discovery Plan.	Envr / PM / Construction	October, 2016
Active	120	Threat	Right of Way	**Utility Corridor - Additional Right of Way**	The project involves a 3-mile relocation of utilities. Caltrans has proposed use of a utility corridor and is anticipating that easements will be acquired by Caltrans staff for this corridor. If the utility companies insist on relocation in an area outside of the proposed corridor, then additional ROW mapping and acquisition will be required, which could delay RTL.	The PDT initiated early coordination with all utilities. Conflict maps and project base map data were provided to utility companies. Currently the PDT assumes that the proposed utility corridor will be used. Utility companies provided conceptual plans in October 2016 that indicate the utility companies have generally agreed to use the proposed utility corridor.	2-Low	2 -Low	4	4 -Moderate	8		Mitigate	The PDT will mitigate the risk by continuing to build on the momentum generated from early utility coordination.	Design	October, 2016
Active	130		Right of Way	**Condemnation**	Because of the large number of parcels involved in the project and the potential of staged delivery of Appraisal Maps, leaving insufficient time for negotiations, there is an increased risk of parcels going to condemnation, which would lead to a delay of RTL.	The condemnation process requires 12 to 15 months to acquire an Order of Possession. Final Appraisal Maps are expected to be delivered at least 18 months before RW Cert.	2-Low	2 -Low	4	4 -Moderate	8		Mitigate	The PDT will continue to mitigate the risk by coordinating requirements between Right of Way Engineering and Design.	Right of Way	October, 2016
Active	140	Threat	Design	**Geotech Constraints**	Because the geotechnical investigation is not complete, there is a possibility that unforeseen geotechnical issues can increase construction costs and delay construction schedule.	This volcanic area has a high diversity of soil types. It is currently assumed that all cut materials will be suitable for fill. Geotechnical investigations should begin in Spring of 2017 and are expected to be completed by Fall of 2017.	3-Moderate	2 -Low	6	2 -Low	6		Mitigate	Design has estimated different levels of effort needed for excavation, which could increase cost. These factors are in the estimate to reduce this risk to an acceptable level.	Design	October, 2016
Active	150	Threat	Right of Way	**Mitigation Parcels**	The mitigation plan is in development. If the required mitigation requires acquisition of additional parcels and this need is not identified in time, then RTL could be delayed.	Caltrans is in control of the aspect of the mitigation plan that involves property acquisition, mitigating for oak woodland impacts. Resource Agency oversight is not required for this issue.	2-Low	2 -Low	4	2 -Low	4		Mitigate	The mitigation specialist will engage in a property search soon after PA&ED.	Right of Way / Environmental	October, 2016

LEVEL 2 - RISK REGISTER	PA&ED - LAK-29 (8-Mile, Four-Lane Expressway)						DIST- EA: 01-2981U		Project Manager: Jaime Matteoli							
Risk Identification							Risk Assessment						Risk Response			
Status	ID #	Type	Category	Title	Risk Statement	Current status/assumptions	Probability	Cost Impact	Cost Score	Time Impact	Time Score	Rationale	Strategy	Response Actions	Risk Owner	Updated
Active	154	Threat	Right of Way	**Delay of Appraisal Maps and Deeds**	As a result of late delivery of Appraisal Maps and Deeds, a delay of RW Cert may occur, which would lead to a delay of RTL.	Design requirements are being delivered to RW Engineering in stages as design is completed. Completion of project design is partially dependent on yet to be completed utility relocation plans. Because of this, Appraisal Maps are being delivered to Right of Way in stages after PAED. Late delivery of Appraisal Maps could leave insufficient time to complete acquisitions prior to RW Cert.	2-Low	2 -Low	4	2 -Low	4		Mitigate	The PDT will mitigate the risk by continuing to build on the momentum generated from early utility coordination.	Right of Way	October, 2016
Active	158	Threat	Right of Way	**Additional RW Requirements**	As a result of the identification of additional right of way requirements, a delay of RW Cert may occur, which would lead to a delay of RTL.	Project design is in process and is partially dependent on the results of utility relocation plans yet to be completed. As a result, additional right of way requirements may be identified. The late identification of right of way requirements could lead to a delay of the RW Certification and RTL.	2-Low	2 -Low	4	2 -Low	4		Mitigate	The PDT will mitigate the risk by continuing to build on the momentum generated from early utility coordination.	Right of Way	October, 2016
Active	160	Threat	Design	**Relinquishment**	The project requires a relinquishment agreement of frontage roads that Lake County has expressed concerns about. As a result of negotiations with the County of Lake there could be an increase in R/W capital or construction costs due to concerns by the County.	The Design team is coordinating with Lake County on the relinquishment and design of frontage roads. A meeting was held in late October 2016.	2-Low	2 -Low	4	1 -Very Low	2		Mitigate	The PDT will mitigate the risk by continuing communications with Lake County and incorporating their desires as much as possible.	Design	October, 2016
Retired	300	Threat	Envr	**USFWS (BA/BO)**	USFWS may not accept our Biological Assessment (BA) and issue a BO. Coordination and consultation with USFWS could require changes and/or additional studies, which could delay the project schedule and increase support costs due to the additional work.	Retired: USFWS accepted the BA and issued a BO	3-Moderate	8 -High	24	8 -High	24	Consultation with USFWS is needed once the BA is complete, and the BA is only marginally complete. Historical discussions with USFWS have always led to more questions and studies.	Mitigate	Review and edit the BA as much as possible. Coordinate with all functionals to ensure the BA is complete and accurate prior to consultation.	Chris Quiney / Julie Owen	October, 2016
Retired	310	Threat	Design	**RTL**	If PA&ED is delayed, then the time available to design the project during the PS&E phase is too short, which increases the chances of delaying RTL.	Retired: risk is considered at enterprise level.	4-High	4 -Moderate	16	4 -Moderate	16	Environmental has delayed Final EIR/EA until 10/1/16. Design now has from 10/1/16 until 3/1/18 to RTL the project.	Mitigate	Design will continue to refine the design during the PA&ED phase as much as possible in order to reduce the design time needed in the PS&E phase. Other opportunities to reduce the design time will continually be explored.	Design	October, 2016
Retired	320	Threat	Envr	**CEQA/NEPA Lawsuit**	As a result of updating environmental studies for the Final EIR/EA and not recirculating the Draft ED, we could receive lawsuits from environmental groups, which could delay PS&E and require additional work.	Retired: The PDT agreed to recirculate the environmental document.	2-Low	8 -High	16	8 -High	16	Environmental believes it is risky to not recirculate the DED.	Mitigate	PDT will continue to review the project for accuracy and completeness. PM will continuously update management.	PDT	October, 2016
Retired	330	Threat	Programming	**Funding**	As a result delays to achieving PA&ED by 3/1/15, the support cost could increase above the programmed amount.	Retired: PA&ED currently on track for 12/1/16	4-High	4 -Moderate	16	4 -Moderate	16	Environmental has already determined a six (6) month delay to delivery of the Final EIR/EA.	Mitigate	Opportunities to reduce the design costs are being explored. The Team is developing an estimate to complete PA&ED. Only essential personnel should be charging to the project. The PM is looking for opportunities to reimburse the project for efforts during the K phase. The PM will be continually monitoring	PM / PDT	October, 2016
Retired	340	Threat	Envr	**USFWS (Mannings Flat)**	USFWS may not accept the plan to perpetuate hydraulic flows in the area of Mannings Flat, which could require changes and/or additional studies, that would delay the Final EIR/EA and increase support costs.	Retired: USFWS has accepted the planned hydraulics at the Mannings Flat area.	3-Moderate	4 -Moderate	12	4 -Moderate	12		Mitigate	The PM will help prepare an analysis of a similar hydraulic design (Schooner Gulch) currently in use, which demonstrates the success of the currently proposed design. Continue to support biologist, discuss plan revisions that have occurred near Mannings Flat to ensure that accurate and complete information is transferred to the USFWS.	Chris Quiney / Julie Owen	October, 2016
Retired	350	Threat	Envr	**EIR/EA Updates**	Updates to sections of the Environmental Document may be required, which could further delay delivery of the Final EIR/EA.	Retired: Updates to Environmental document are needed and in progress	3-Moderate	4 -Moderate	12	4 -Moderate	12		Mitigate	The PDT will review decisions to limit the work on the ED to finalize the document in a timely manner. The PM is continuing to have frequent PDT meetings to monitor action items. The PDT will continue to update the PM and other functional units with the progress of deliverables.	Chris Quiney / Wes Stroud	October, 2016

LEVEL 2 - RISK REGISTER				PA&ED - LAK-29 (8-Mile, Four-Lane Expressway)			DIST- EA: 01-2981U		Project Manager: Jaime Matteoli							
Risk Identification							Risk Assessment						Risk Response			
Status	ID #	Type	Category	Title	Risk Statement	Current status/assumptions	Probability	Cost Impact	Cost Score	Time Impact	Time Score	Rationale	Strategy	Response Actions	Risk Owner	Updated
Retired	360	Threat	Envr	**Staffing**	As a result of reduced staffing levels the development of the Final EIR/EA could be delayed, which would increase support costs for the PA&ED phase.	Retired: Appropriate staffing is in place.	3-Moderate	4 -Moderate	12	4 -Moderate	12		Mitigate	PDT will continue to communicate with Environmental and show presence in Redding. PM will also be continuously updating management. When problems are highlighted management will discuss, and determine and assign the appropriate level of support needed.	Chris Quiney / Wes Stroud / PM	October, 2016

01-LAK-29
PM 23.6/31.6
01-2981U0
01 0000 0090

ATTACHMENT P
WILDLIFE CROSSING PLANS

Dist	COUNTY	ROUTE	POST MILES TOTAL PROJECT	SHEET No.	TOTAL SHEETS
01	Lak	29	23.80/31.60	1	4

ENVIRONMENTAL STUDY ONLY

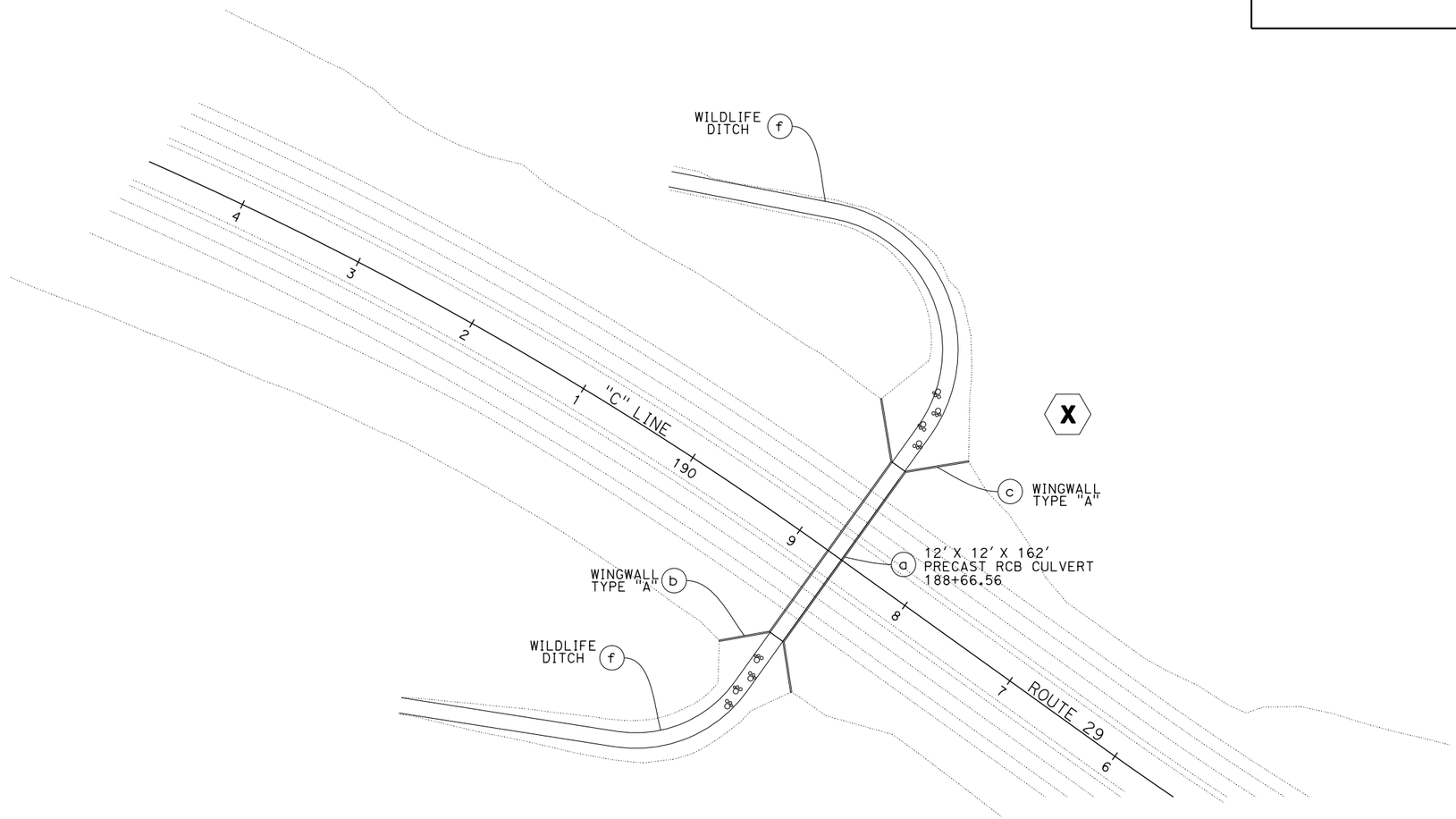

DRAINAGE SYSTEM No. X

"C" 188+66.56

DRAINAGE PLAN

SCALE 1" = 50'

D-XX

APPROVED FOR DRAINAGE WORK ONLY

STATE OF CALIFORNIA - DEPARTMENT OF TRANSPORTATION

Caltrans

FUNCTIONAL SUPERVISOR

CALCULATED-DESIGNED BY

CHECKED BY

REVISED BY

DATE REVISED

LAST REVISION 00-00-00

DATE PLOTTED => 27-JAN-2016

TIME PLOTTED => 15:23

BORDER LAST REVISED 7/2/2010

USERNAME => s112718

DGN FILE => Wild_1_Design_All.dgn

RELATIVE BORDER SCALE IS IN INCHES 0 1 2 3

UNIT 0311

PROJECT NUMBER & PHASE 0114000043

Dist	COUNTY	ROUTE	POST MILES TOTAL PROJECT	SHEET No.	TOTAL SHEETS
01	Lak	29	23.80/31.60	1	4

ENVIRONMENTAL STUDY ONLY

NOTE:

1. FG ELEVATIONS SHOWN FOR THE CULVERT ARE 2.0′ ABOVE THE TOP OF CONCRETE INVERT TO PROVIDE A NATURAL SURFACE FOR WILDLIFE CROSSING.

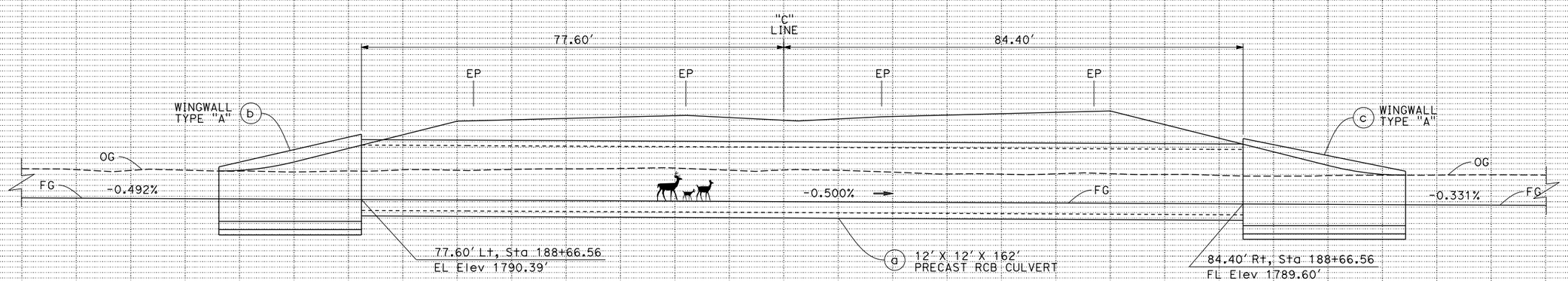

DRAINAGE SYSTEM No. X

"C" 188+66.56

DRAINAGE PROFILE

SCALE 1" = 10′

D-XX

APPROVED FOR DRAINAGE WORK ONLY

STATE OF CALIFORNIA - DEPARTMENT OF TRANSPORTATION

Caltrans

FUNCTIONAL SUPERVISOR

CALCULATED-DESIGNED BY

CHECKED BY

REVISED BY

DATE REVISED

LAST REVISION 00-00-00

DATE PLOTTED => 27-JAN-2016

TIME PLOTTED => 15:24

Dist	COUNTY	ROUTE	POST MILES TOTAL PROJECT	SHEET No.	TOTAL SHEETS
01	Lak	29	23.80/31.60	3	4

ENVIRONMENTAL STUDY ONLY

NOTES:

1. FOR WINGWALLS SEE STANDARD PLAN D84.
2. FOR CABLE RAILING SEE STANDARD PLAN B11-47.
3. FOR PRECAST RCB CULVERT SEE STANDARD PLANS D83A & D83B.

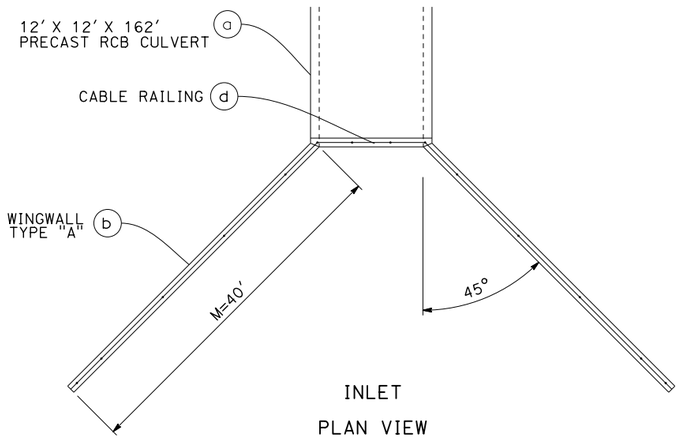

INLET
PLAN VIEW

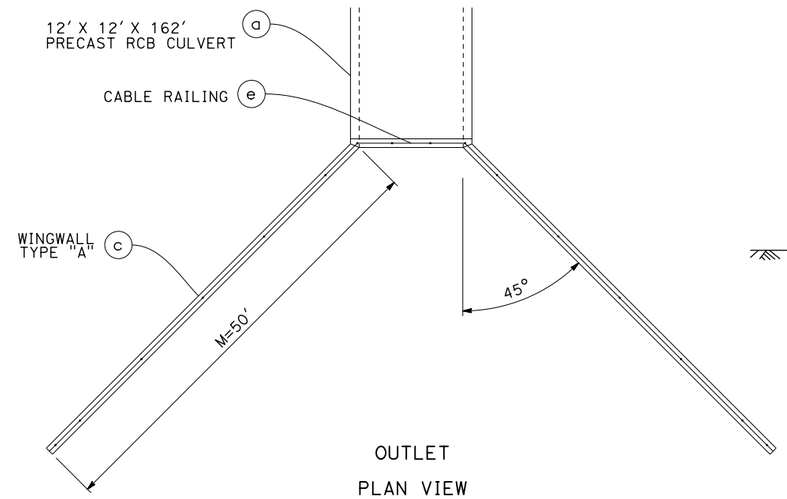

OUTLET
PLAN VIEW

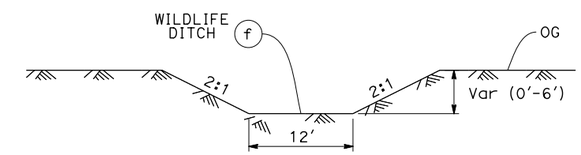

WILDLIFE CROSSING
CHANNEL

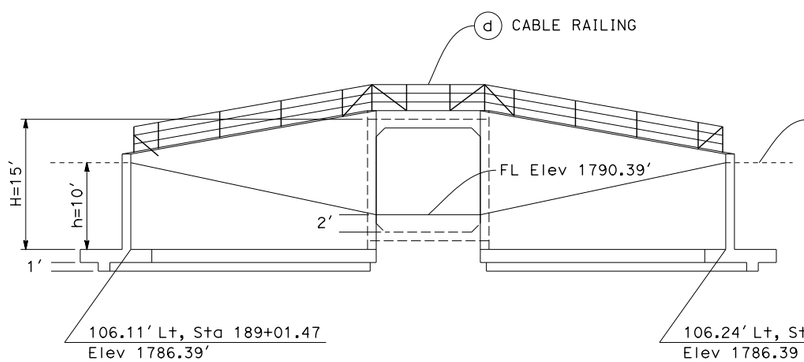

INLET
ELEVATION VIEW

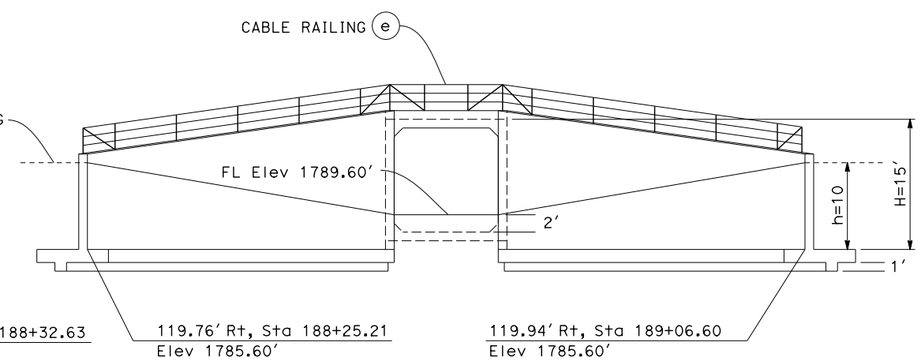

OUTLET
ELEVATION VIEW

DRAINAGE SYSTEM No. X

"C" 188+66.56

DRAINAGE DETAILS

NO SCALE

D-XX

APPROVED FOR DRAINAGE WORK ONLY

STATE OF CALIFORNIA - DEPARTMENT OF TRANSPORTATION

Caltrans

FUNCTIONAL SUPERVISOR | CALCULATED-DESIGNED BY | CHECKED BY | REVISED BY | DATE REVISED

LAST REVISION 00-00-00 | DATE PLOTTED => 27-JAN-2016 | TIME PLOTTED => 15:24

Dist	COUNTY	ROUTE	POST MILES TOTAL PROJECT	SHEET No.	TOTAL SHEETS
01	Lak	29	23.80/31.60	4	4

ENVIRONMENTAL STUDY ONLY

DRAINAGE QUANTITIES

DRAINAGE SHEET No.	DRAINAGE SYSTEM No.	DRAINAGE UNIT	CABLE RAILING	MISCELLANIOUS IRON AND STEEL	CLASS 1 CONCRETE (STRUCTURE)	MINOR CONCRETE (MINOR STRUCTURE)	DITCH EXCAVATION	DESCRIPTION	STATION	DRAINAGE SYSTEM No.	DRAINAGE UNIT
			LF	LB	CY	CY	CY				
D-X	X	a		45,522.0	324			12'X12'X162' RCB CULVERT (WILDLIFE)	188+66.56	X	a
		b		8,552.0		90.00		INLET WINGWALL TYPE "A"			b
		c		10,690.0		112.50		OUTLET WINGWALL TYPE "A"			c
		d	92					INLET CABLE RAILING			d
		e	112					OUTLET CABLE RAILING			e
		f					2617	WILDLIFE DITCH			f
		TOTAL	204	64,764.0	324	202.50	2617				

STATE OF CALIFORNIA - DEPARTMENT OF TRANSPORTATION

Caltrans

FUNCTIONAL SUPERVISOR

CALCULATED-DESIGNED BY

CHECKED BY

REVISED BY

DATE REVISED

LAST REVISION 00-00-00

DATE PLOTTED => 27-JAN-2016
TIME PLOTTED => 15:24

01-LAK-29
PM 23.6/31.6
01-2981U0
01 0000 0090

ATTACHMENT Q
PRELIMINARY DRAINAGE REPORT

LAKE COUNTY SR 29

Convert to Expressway

PRELIMINARY DRAINAGE REPORT

For Project Report Phase

FOR THE WIDENING AND REALIGNING OF EXISTING STATE ROUTE 29 FROM DIENER DRIVE INTERSECTION, KP 38.0 (PM 23.6), TO NEAR THE SR 175 INTERSECTION, KP 50.9 (PM 31.6) IN LAKE COUNTY, CALIFORNIA

PREPARED BY

DESIGN BRANCH E1
EA 01-2981U
EFIS 0100000090
November 2015

This Preliminary Drainage Report has been prepared under the direction of the following registered civil engineer. The registered civil engineer attests to the technical information contained herein and the engineering data upon which recommendations, conclusions, and decisions are based.

REGISTERED CIVIL ENGINEER

11/22/2016
DATE

REGISTERED PROFESSIONAL ENGINEER
BRIAN SCOTT SIMON
No. C 62970
Exp. 6/30/18
CIVIL
STATE OF CALIFORNIA

TABLE OF CONTENTS

1- Summary

Purpose

Project Description

Existing Drainage

Manning Flat

Thurston Creek

Other Areas of Concern

Storm Water Basins and Regulations

2- Offsite Hydrology

Hydrologic Analysis

Soil Characteristics

3- Offsite Hydraulics

4- Onsite Hydrology

General Drainage Patterns

Hydrologic Analysis

5- Onsite Hydraulics

Debris/Bulking Potential

Culvert Sizing Criteria and Assumptions

Drainage Design Overview

Thurston Creek Recommendation

Inlet/Outlet treatment

Energy Dissipation Requirements

Manning Flat

AC Dike

Ditches

Drainage Inlets

Erosion Control Strategy

LIST OF FIGURES

Figure 1. Project Location Map

Figure 2. Project Vicinity Map

APPENDICES

A. Watershed Maps

B. Hydrology Calculation and Culvert Sizing

C. Floodplain Report

D. Revised Preliminary Hydraulic Report
(Structures Hydraulics Memo December 30, 2011)

E. Revised Design Discharges (District 1 Hydraulics Memo November 15, 2005)

Figure 1. Project Location Map

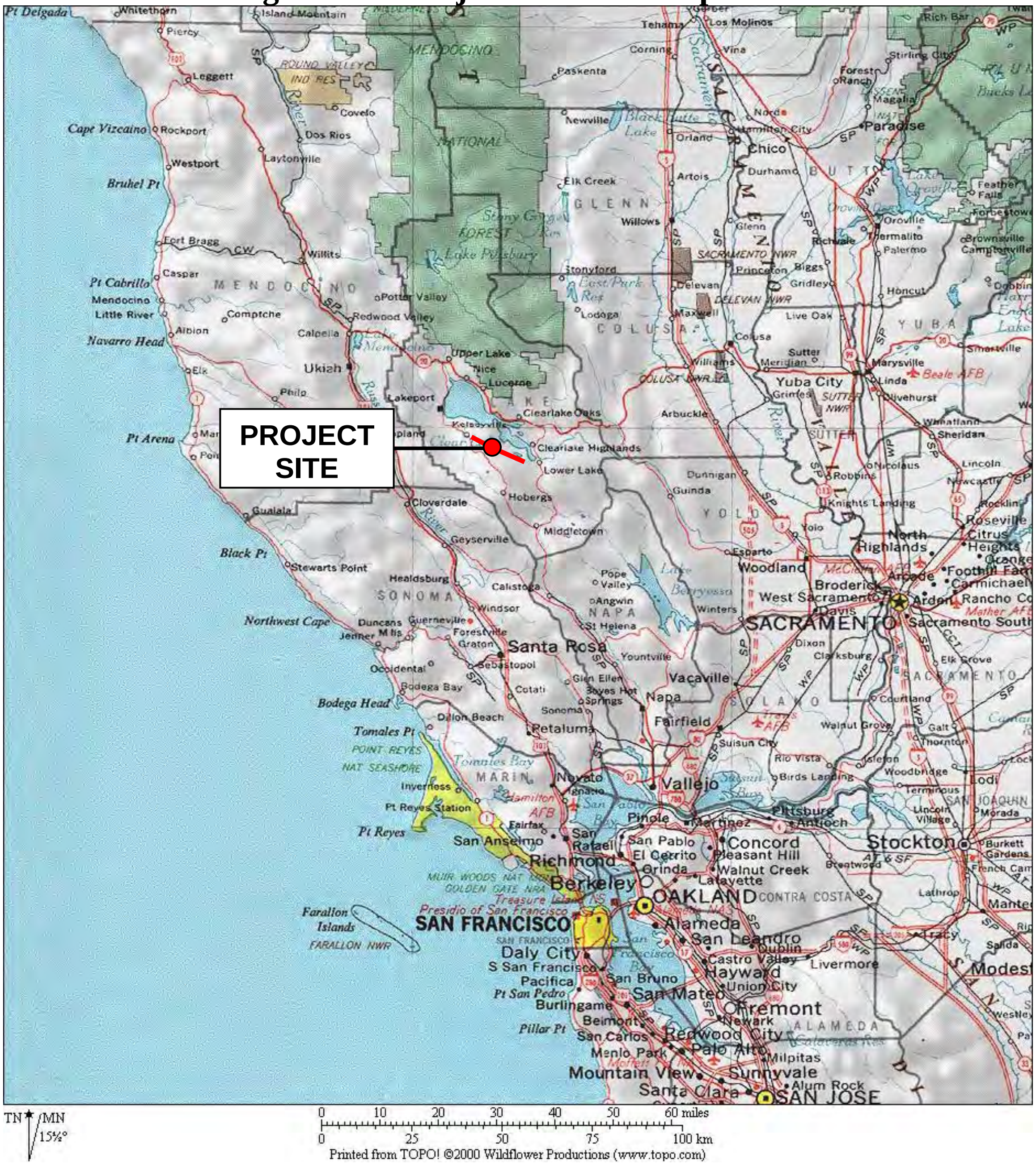

Lake County SR 29 Improvement Project **Lake County, California**	**FIGURE** **1**
<u>Project Location Map</u>	September 2015

Figure 2. Project Vicinity Map

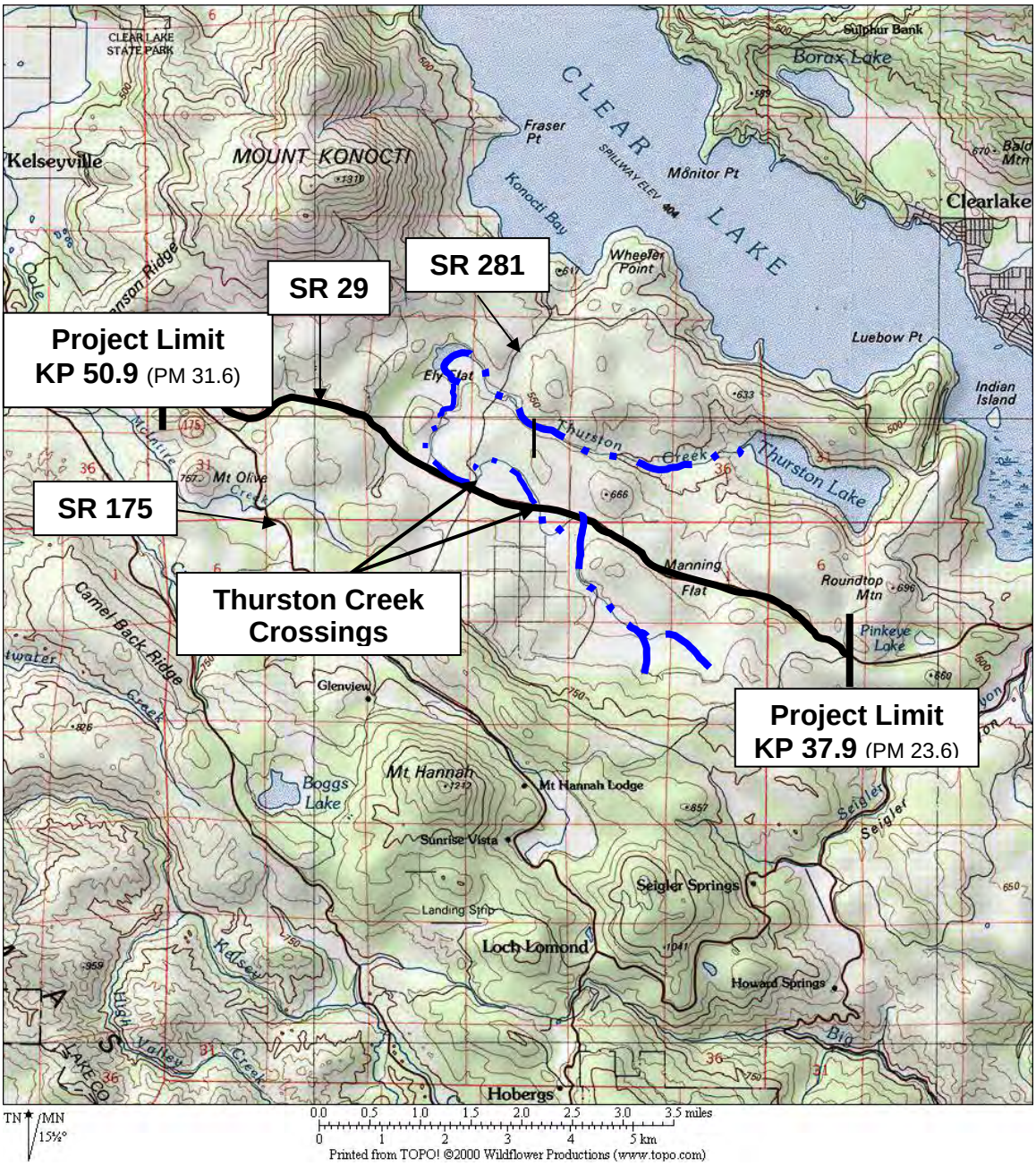

Lake County SR 29 Improvement Project **Lake County, California**	**FIGURE** **2**
<u>Project Vicinity Map</u>	September 2015

1- SUMMARY

Purpose

The purpose of this Preliminary Drainage Report is to outline the initial design approach for the drainage systems associated with the Lake County State Route (SR 29) Convert to Expressway Project, Alternative D, 4-Lane Expressway and Signalized Intersection at State Route 281 (SR 281). This report also discusses the existing drainage patterns within the project limits, the project hydrologic conditions, onsite and offsite hydraulics, proposed project drainage design, project storm water quality and floodplain issues, and scope of the proposed project drainage. This report will present the drainage design procedures, methodology, criteria, and unique drainage features requiring special attention.

Project Description

The California Department of Transportation (Caltrans), Federal Highway Administration (FHWA), in cooperation with the Lake County/City Area Planning Council (APC), propose to upgrade a 13 kilometer (8.0 mile) segment of State Route (SR) 29, in Lake County, from 0.2-km (0.1-mile) south of the intersection with Diener Drive at KP 38.5 (PM 23.6) to 0.9 km (0.6 mile) north of the junction with SR 175 at KP 50.8 (PM 31.6). Project upgrades to the facility include:

- Upgrade SR 29 from a two-lane conventional highway to a four-lane expressway with access control on a new alignment
- Reconstruct SR 29/Diener Drive, SR 29/SR 281/Red Hills Road, SR 29/SR175 intersections
- Construct frontage roads, as needed, to replace existing access to SR 29 from adjacent properties
- Construct level spreader to perpetuate existing water flows near native endangered plants
- Upgrade drainage systems through the entire length of project including box culverts for seasonal streams

The project will provide four 3.6-meter (12 ft.) lanes with 1.5-meter (5 ft.) inside and 3.0-meter (10 ft.) outside paved shoulders with a 13.8-meter (46 ft.) median. Intersections for access control will include dedicated left turn lanes along with acceleration/deceleration lanes.

Existing Drainage

The general lay of the land within the project area is gradually sloping to the north-northeast toward Thurston Creek and Thurston Lake. Along the length of the project several unnamed watersheds cross the highway. Thurston Creek crosses SR 29 at KP 43.82 (PM 27.23) and at a seasonal overflow channel at KP 43.98 (PM 27.3).Thurston Creek also crosses SR 281 at KP 27.25 (PM 16.93), approximately 100 meters north of SR29/281 intersection and again at about one mile north of the 175/281 intersection. In areas where the roadway is crowned, the drainage generally sheet flows to each shoulder and then discharges overland away from the roadway prism. In areas where the roadway is superelevated, the drainage sheet flows to the low side of super and is collected in a roadside ditch. If the superelevated roadway is in fill,

the drainage sheet flows to the low side of super at the hinge point and then discharges away from the roadway prism. If the superelevated roadway is in cut, the drainage sheet flows to the low side of super into either an unlined ditch and conveyed along the roadway until dissipated across land, or into an unlined drainage ditch and conveyed to a drainage inlet at the bottom of cut, through a culvert and then discharges away from the roadway.

There are 33 cross culverts that provide concentrated flow a means to crossing the existing highway. In general, these culverts drain from the south to north side of the roadway and are described in the following table:

TABLE 1
EXISTING CULVERT DESCRIPTIONS

Culvert	Description
Culvert #1 KP 38.32 (PM 23.81)	The existing culvert is a 600mm CSP with a GMP DI at the inlet and no outlet structure. The culvert is in good condition.
Culvert #2 KP 38.62 (PM 24.00)	The existing culvert is a 450mm CSP with a GMP DI at the inlet and no outlet structure. The culvert is damaged at the outlet.
Culvert #3 KP 38.79 (PM 24.10)	The existing culvert is a 600mm CSP with a GMP DI at the inlet and no outlet structure. The culvert is in good condition.
Culvert #4 KP 39.35 (PM 24.45)	The existing culvert is a 450mm CSP with no inlet or outlet structure. The culvert is in good condition.
Culvert #5 KP 40.04 (PM 24.88)	The existing culvert is a 450mrn CSP with a GMP DI at the inlet and no outlet structure. The culvert is in good condition.
Culvert #6 KP 40.51 (PM 25.16)	The existing culvert is a double 600mm CSP with a rubble headwall at the inlet and 90 elbows and no outlet structure. The culverts had some rust and were in fair condition. There is considerable erosion at the outlet to a depth of approximately 0.6m.
Culvert #7 KP 40.73 (PM 25.31)	The existing culvert is a 450mm CSP with no inlet or outlet structure. The culvert outlets into a gentle sloping meadow, which causes ponding. The outlet is 50% full with sediment. At the time of the April field review the outlet of the culvert was submerged.
Culvert #8 KP 40.99 (PM 25.47)	The existing culvert is a 1050mm CSP with a headwall at the inlet and a downdrain at the outlet. The downdrain outlets on recently placed ¼ tonne RSP at the bottom of a severely eroded ditch. The ditch is approximately 6m deep at the outlet and extends well beyond the right of way and continues for several hundred meters on private property towards Thurston Lake. This location has a long history of erosion dating back to the 1800's when a ditch was constructed to drain Manning Flat, which was previously a lake.
Culvert #9 KP 41.55 (PM 25.82)	The existing culvert is a 450mm CSP with a Gl DI at the inlet and no outlet structure.
Culvert #10 KP 42.10 (PM 26.16)	The existing culvert is a 450mm CSP with no inlet or outlet structure.
Culvert #11 KP 42.65 (PM 26.50)	The existing culvert is a 450mm CSP with no inlet or outlet structure.

Culvert	Description
Culvert #12 KP 43.26 (PM 26.88)	The existing culvert is a 450mm CSP with no inlet or outlet structure.
Culvert #13 KP 43.82 (PM 27.23)	The existing culvert is a double 1650 x 1010mm CSPA with a headwall at the inlet and outlet. The structure is in good condition. However, water is ponding at both the inlet and outlet due to the elevation at the culvert invert being lower than the outflow stream through wetlands.
Culvert #14 KP 43.98 (PM 27.33)	The existing culvert is a double 2130 x 900mm RCP with a headwall at the inlet and outlet. The structure is in good condition.
Culvert #15 KP 44.18 (PM 27.45)	The existing culvert is a double culvert installation with a 900mm and a 1200mm CSP. There are no inlet or outlet structures. The 1200mm CSP is in good condition. The 900mm CSP is in fair condition.
Culvert #16 KP 44.61 (PM 27.72)	The existing culvert is a double culvert installation with a 450mm CSP and a 900 x 560mm CSPA. There is a headwall at the inlet and no outlet structure. The inlet is 50% full with sediment and debris. There is considerable erosion at the outlet to a depth of approximately 0.6m. The inlet structure is in good condition.
Culvert #17 KP 44.93 (PM 27.92)	The existing culvert is a 1100 x 1730mm oval RCP with a headwall at the inlet and no outlet structure. The culvert is in good condition.
Culvert #18 KP 45.06 (PM 28.00)	The existing culvert is a double 450mm CSP with a SFES at the inlet and no outlet structure. The culverts are in good condition.
Culvert #19 KP 45.69 (PM 28.39)	The existing culvert is a 600mm CSP with no inlet structure and a concrete box DI at the outlet. The structure is in a severe deteriorated condition. There is a wetland pond adjacent to the inlet that partially feeds into the culvert. There are also two water lines routed within the culvert.
Culvert #20 KP 45.87 (PM 28.50)	The existing culvert is a 600mm RCP with no inlet or outlet structure. The culvert is in excellent condition.
Culvert #21 KP 46.22 (PM 28.72)	The existing culvert is a 900mm CSP with no inlet or outlet structure. The culvert is in good condition.
Culvert #22 KP 46.61 (PM 28.96)	The existing culvert is a 450mm CSP lined with a 375mm PVC liner.
Culvert #23 KP 46.96 (PM 29.18)	The existing culvert is a 450mm CSP with a headwall at the inlet and no outlet structure.
Culvert #24 KP 48.15 (PM 29.92)	The existing culvert is a 450mm CSP with a headwall at the inlet and no outlet structure.
Culvert #25 KP 48.18 (PM 29.94)	The existing culvert is a 600mm CSP with no inlet or outlet structure.
Culvert #27 KP 48.76 (PM 30.30)	The existing culvert is a 600mm CSP with no inlet or outlet structure

Culvert	Description
Culvert #28 KP 49.57 (PM 30.80)	The existing culvert is a 600mm HDPE that was placed inside an abandoned 1800 x 2100mm RCB that was functioning previously as a cattle pass. The southerly end of the culvert was completely buried and was not located. It appears this location carries a minimal amount of drainage and can possibly be deleted.
Culvert #29 KP 49.84 (PM 30.97)	The existing culvert is a 750mm CSP with no inlet or outlet structure. The culvert is in good condition.
Culvert #30 KP 49.94 (PM 31.03)	The existing culvert is a 600mm CSP with no inlet or outlet structure.
Culvert #31 KP 50.28 (PM 31.24)	The existing culvert is a 450mm RCP lined with a 375mm PVC liner. There is a concrete box DI at the inlet and no outlet structure.
Culvert #32 KP 50.42 (PM 31.33)	The existing culvert is a 450mm CSP with a concrete box DI at the inlet and no outlet structure.
Culvert #33 KP 50.74 (PM 31.53)	The existing culvert is a 600mm RCP with no inlet or outlet structure. The culvert is in excellent condition.

Manning Flat

Manning Flat is located near KP 40.99 (PM 25.47) and is on the north side of the SR 29 alignment in an area surrounded by volcanic ridges. Historically, the Manning Flat area was more of a lake than a flat as the surrounding topography prevented the area from draining. This situation was altered when a landowner blasted a tunnel through the hillside which drained the lake and allowed runoff to pass through the area, eventually flowing to Thurston Lake approximately 2.6 kilometers downstream. After collapse of the tunnel, a ditch was constructed to provide a means for the area to continue to drain into Thurston Lake. With the alteration of the basin, concentrated runoff began to form or erode channels across the flat area. As the erosion continued over time, the channel became both deeper and wider and now extends upstream to the roadway prism of the State Route. A description of the conditions at the upstream end of the channel is described below in the Other Areas of Concern section.

Thurston Creek

Thurston Creek crosses SR 29 at two locations within the project limits. The existing Thurston Creek culverts under SR 29, consist of a double 1650 mm x 1010 mm (5.4' x 3.33') arched corrugated steel pipe at KP 43.82 (PM 27.23). During high flow events, Thurston Creek will overflow its existing banks upstream (south) of SR 29 and spread west, joining with an unnamed channel. This flow crosses under SR 29 through a double 2130 mm x 900 mm (7' x 3') reinforced concrete box culvert at KP 43.98 (PM 27.33).

Although there is no record of runoff overtopping the highway near these crossings, the combined flow of the Thurston Creek watershed and a smaller unnamed channel watershed located on south side of the highway contributes to the flooding of the area around SR 29. The total of the two watersheds is 11.93 square kilometers. Field reviews indicated that debris and sediment accumulation in the drainage systems is present and should be considered in the design. Caltrans maintenance records indicate the drainage systems located at KP 43.82 (PM 27.23) and KP 43.98 (PM 27.33) and other nearby culvert crossings have

experienced problems in the past. Maintenance records indicate that "flooding, debris, and sedimentation accumulation is common" in this stretch of SR 29.

Thurston Creek crosses SR 281 within the proposed project limits at KP 27.25 (PM 16.93), approximately 100 m north of SR 29. The creek also crosses the route again about one mile north, which is outside of the project limits. The first creek crossing with the highway is through double 3050 mm x 1400 mm (10'x4.6') reinforced box culverts. There is no record of overtopping occurring at these crossings.

Other Areas of Concern

In addition to Manning Flat and Thurston Creek other areas of concern within the project limits include the following locations:

- KP 40.49 (PM 25.17) – an existing double 600 mm corrugated steel pipe (CSP) culvert with a concreted rubble headwall at the inlet and no outlet structure. A roadside ditch is aligned parallel with the roadway and conveys roadway runoff to the double culvert. The culvert is aligned as such the inlet is parallel to the flow line of the ditch, then the culvert makes a 90 degree bend to cross perpendicular to the roadway. Ponding occurs at the outlet because the conveyance ditch elevation increases above the flow line when crossing the adjacent property.

- KP 40.73 (PM 25.31) – an existing 450 mm culvert drains to the north into what appears to be a large open wetland area. Water ponds in this area rather than draining off toward the north/east of the property. Flows exiting the culvert do not have an outlet drainage way so water collects at the outlet and spreads parallel to the roadway. At the time of the field review the culvert outlet was submerged.

- KP 40.99 (PM 25.47) the existing culvert is a 1050mm CSP with a headwall at the inlet and a downdrain at the outlet, which is located at the upstream end of the Manning Flat channel described earlier. The CSP downdrain has a slope of approximately 1:2 and outlets to placed ¼ Tonne RSP approximately 4m below existing roadway. The RSP continues to an approximate depth of 6m from the existing roadway at a 1:2 slope and terminates in native soil. The soil condition can be described as loose sediment with little or no compaction. Erosion is severe and extends beyond the highway right of way and continues for several hundred meters on private property towards Thurston Lake. Constant maintenance is required in the form of extending the RSP and downdrain as the erosion cuts into the roadway prism.

- KP 49.94 (PM 31.03) – an existing 600 mm culvert at the intersection of SR 29 and SR 175 experiences flooding problems when sediment/debris buildup in a ditch on the outlet end causes backwater flooding of these two highways. The ditch is located on private property and Caltrans Maintenance has requested the property owners to keep the ditch free of major sediment/debris buildup. When this does not occur, the culvert outlet causes backwaters to extend along SR 29 to the next cross culvert north of this location (KP 50.27 (PM 31.24)).

Storm Water Basins and Regulations

As described in the Storm Water Data Report included as an attachment to the Project Report, the entire project is within the Cache Creek hydrologic unit in Lake County which spans across two hydrologic sub-areas. The limits of the Lower Lake Hydrologic Sub-Area (sub-area #513.51) are approximately between KP 37.9 (PM 23.6) to KP 47.2 (PM 29.3) and the Lakeport Hydrologic Sub-Area (sub-area #513.55) are approximately between KP 47.2 (PM 29.3) to KP 50.9 (PM 31.6). Lake County has been designated a Phase II Urban Municipal Separate Storm Sewer System (MS4). However, no MS4 are located within the project limits.

Receiving bodies for the project include two named lakes, two named creeks, unique geological features which concentrate water, along with several named and unnamed streams. The two lakes are Pinkeye Lake and Thurston Lake. Pinkeye Lake is intermittent lake near the beginning of the project limits while Thurston Lake is a perennial lake located approximately 3.2 km (2 miles) north of the eastern end of the project limits. The two creeks, Thurston and McIntire Creeks, are both intermittent creeks. Geological features such as Manning Flat and Ely Flat both drain into Thurston Lake. Clear Lake is located approximately 2.4 km (1.5 miles) north of Thurston Lake and receives water from the project during major events.

Thurston Creek receives water from several intermittent unnamed streams flowing northeast before changing direction flowing east to drain into Thurston Lake. Manning Flat is a combination of streams. The intermittent flows meander into an unnamed perennial stream which eventually drains into Thurston Lake. Manning Flat is an area of complex channels that eventually drain into Thurston Lake while Ely Flat is a location where an intermittent stream widens to create a pond. McIntire Creek intermittently flows northeast eventually draining into a perennial called Cole Creek.

Thurston and Pinkeye Lake are not identified on the Clean Water Act 303(d) listed water bodies. McIntire Creek which is intermittent drains into perennial Cole Creek which also is not listed as a Clean Water Act 303(d) listed water body however Cole Creek does drain in Clear Lake which is a listed 303(d) water body for mercury and nutrients. Clear Lake has USEPA approved TMDL for these two pollutants.

The project has no water bodies that directly discharge into any listed RWQCB Water Quality Objectives. However, there are two water bodies near the project that do have listed beneficial uses:

- Cache Creek – Clear Lake: Agricultural Supply (AGR), Cold Fresh Water Habitat (COLD), Municipal and Domestic Supply (MUN), Water Contact Recreation (REC1), Non- Contact Water Recreation (REC2), Reproduction and/or Early Development (SPWN), Warm Fresh Water Habitat (WARM), Wildlife Habitat (WILD)
- Cache Creek – Clear Lake to Yolo Bypass: AGR, COLD, IND, MUN, Industrial Process Supply (PRO), REC1, REC2, SPWN, WARM, WILD

Due to the large size of the project including widening of creek crossings, a Clean Water Act 401 Water Quality Certification is required from the RWQCB (Central Valley). The 401 Certification will be prepared and submitted during PS&E.

Stormwater from the proposed project will discharge into the Lake County Watershed Protection District jurisdiction. The proposed drainage and treatment design may be reviewed by the water districts during the design phase of the project.

2- OFFSITE HYDROLOGY

Hydrologic Analysis

The project is located along a rural stretch of SR 29. The land use adjacent to the project is mostly undeveloped with agricultural, open space, rural, and single family residences. The terrain surrounding the project area is mostly mountainous and interspersed with small valleys and basins. The Thurston Creek watershed lies within a closed drainage basin created by a lava flow that damned the creek, creating Thurston Lake. The approximate elevation of SR 29 is 580 meters (1,900 feet), and Thurston Lake, to the northeast, lies at 425 meters (1,400 feet).

The project will impact offsite drainage facilities owned by both Caltrans and Lake County. The Regional Analysis Method (Caltrans HDM Section 819.2(2)) was used to determine the peak flows for analyzing the existing and proposed culverts. A minimum of 25.6 acres watershed areas were used for all areas equal or less than 25.6 when preforming calculations of the watershed peak flow. The watershed maps are included in Appendix A.

The Regional Method for the North Coast Region (described in the Caltrans Highway Design Manual Chapter 800) consists of the application of flood frequency regression equations developed for several regions in California. Variables include the mean annual precipitation in inches, and the drainage area in square miles.

The project area experiences a warm temperate (mesothermal) climate characterized by dry summers with little or no precipitation from June to September. The mean annual precipitation is 34.0 inches (Appendix E).

Assumptions, data, equations, spreadsheet calculations, summaries of time of concentration, precipitation intensity, runoff coefficients, mean annual precipitation, elevation index, discharges, for offsite hydrology is included in Appendix B.

Offsite drainage courses will not be eliminated or significantly impacted, however, some drainage patterns will change due to roadway re-alignment and the addition of frontage roads. Effects of increased culvert outflow will be treated by energy dissipaters to reduce erosion and detention basins to attenuate peak flows. Where detention basins are infeasible, the existing downstream channels are expected to have capacity for increased peak flow. Culvert capacity increases will also reduce the probability of flooding upstream areas and the roadway. Therefore, no discernable undesirable offsite or onsite hydraulic or hydrologic impacts are anticipated.

Soil Characteristics

A Preliminary Geotechnical Report (PGR) was completed on January 8, 2003 and a Supplemental PGR was prepared on July 25, 2006 for this project. The purpose of the Supplemental PGR was to address an additional alternative that wasn't considered at the time of the earlier PGR. A variety of soil types occur within the project area ranging from clayey loam to gravelly sandy loam. According to the California Department of Conservation, Division of Mines and Geology Geologic Map Series "Geologic Map of California, Santa Rosa Sheet California", dated 1982, the site is generally located in an area of Clear Lake Volcanics which include dacite, andesite, to basaltic rock, obsidian, basalt, tuff and other pyroclastic rock and rhyolite. Lower level areas such Manning Flat and Shaul Valley are in areas of alluvium (ranging from sand, gravelly sandy loam, silt, clayey loam, to clay). The 1983 U.S. Department of Agriculture Soil Conservation Service Soil Survey of Lake County, California report lists soil types in the project area to consist of silt loam, gravelly loam, gravelly sandy loam, gravelly clay loam, sandy clay loam, stony clay and clay. The permeability of these soils range from low to very high.

Review of the log-of-test borings for Seigler Creek Bridge (PM 20.37), outside the project Environmental Study Limits (ESL) to the east, indicates the near surface material consists of medium dense to dense sand, silt and gravel underlain by weathered sandstone and shale. Review of the boring log for Kelsey Creek Bridge (PM 34.97) outside the project ESL to the west, indicates that the near surface material consists of medium dense to dense sand, silt, and gravel cobbles underlain by medium-stiff to stiff clayey silt.

Groundwater depths are likely to vary within the project limits. The Lake County Soil Survey report indicates a general depth to the high water table of greater than 1.8 m (6 feet) for the soil types that are present within the project limits. According to boring log for bridges in the area, the true ground water table is in excess of 6 meters in depth, but in some areas there is a perched water table; ground water was encountered as shallow as 1 meter below the ground surface.

A detailed analysis of site specific issues such as soil type, groundwater elevation, in-hole conductivity, etc. will be conducted during the design phase.

3- OFFSITE HYDRAULICS

No improvements or changes to existing offsite culverts, bridges, open channels, inlet/outlet structures etc are proposed with the project. Therefore, downstream hydraulics are not expected to change on account of modifications to these conveyance mechanisms and consequently, the existing floodplain conditions as detailed in the Floodplain Analysis (Appendix C) are expected to be perpetuated. Potential changes to the downstream hydraulics due to increased flow as a result of the project will be mitigated by attenuating the peak flow with detention ponds, level spreaders, biostrips and bioswales. Further details on these attenuation devices follow in later sections of this report.

4- ONSITE HYDROLOGY

General Drainage Patterns

With the proposed roadway design there are several drainage pattern situations that come into consideration. These situations require unique runoff strategies. Each of which are described below:

In areas where the proposed roadway is crowned, the drainage will generally sheet flow to the outside shoulders where the runoff will be collected in a roadside ditch or biofiltration swale that will lead to either a cross culvert, a through drainage channel or to a treatment basin. Drainage along the inside shoulders typically flows inward to the median where the runoff is concentrated in a shallow ditch in the median. The median surface drainage will then flow to a drainage inlet that generally discharges into a cross culvert.

In situations where the proposed roadway is crowned and is in fill, surface runoff will sheet flow or be concentrated into an over-side drain leading to a ditch or biofiltration swale at the toe-of-fill which will discharge away from the proposed roadway prism as described above.

When the roadway is crowned and at a cut location, runoff will be intercepted before it reaches the cut slope faces by a brow ditch at the top of slope. In most cases, runoff in the brow ditches will flow to biofiltration swales and ditches where it will be collected and conveyed to areas where the flow can be discharged without causing erosion. Runoff from paved surfaces will concentrate along an AC dike at the bottom of the cut slopes at the outside edge of shoulder. This runoff will flow to an over-side drains that discharge to toe of fill ditches and biofiltration swales. At some locations, a storm drain systems will be included along the shoulder to facilitate collection of drainage water.

In areas where the proposed roadway is superelevated, the drainage from the high side of the cross section will sheet flows to the median. At some locations, a ditch has been included on the high side of the superelevation to collect drainage water. This ditch will intercept the runoff to prevent it from crossing the roadway as concentrated flow. Drainage from the low side of superelevated sections will be collected by either a roadside ditch or along the edge of a diked shoulder. This runoff will flow to an over-side drains that discharge to toe of fill ditches and biofiltration swales. At some locations, storm drain systems will be included along the shoulder to facilitate collection of drainage water. Detailed analysis and design of these features will occur in design phase of the project.

Hydrologic Analysis

The Regional Analysis Method (HDM Index 819.2 (2)) was used to determine the peak flows for analyzing the existing and proposed culverts. This method utilizes the annual rainfall and an altitude index for each watershed. The storm water design discharge values (Qs) were determined from the USGS Regional Flood Frequency Equations for the North Coast Region. The annual rainfall is 864mm (34.0 inches) and the weighted average elevation index is 2.08. The Regional Flood-Frequency Equations used to calculate the Q's are contained in Appendix B, as are the calculations for the design storm frequencies.

5- ONSITE HYDRAULICS

Debris/Bulking Potential

North Region ESB Hydraulics has recommended that all existing 450mm cross-culverts be replaced with a minimum diameter of 600mm (24") diameter culverts to minimize maintenance and prevent clogging. This will allow more flow, require less maintenance, and should reduce buildup. If debris/bulking is found to be a continuous problem, then regular maintenance will be required.

Culvert Sizing Criteria and Assumptions

Per Section 821.3(2) of the HDM, there are two frequency based design criteria that should be considered when sizing culverts: a 10-year storm event without causing the headwater elevation to rise above the inlet top of the culvert (soffit), and the 100-year storm event without headwater rising above the elevation of the roadway or cause objectionable backwater depths or outlet velocities.

Although the HDM allows for culvert diameters less than 600mm (24") diameter, Caltrans North Region Hydraulics recommended in a memorandum (2001, Michael Vina) that all culverts be at least 24" diameter. For instances where a 24"diameter pipe is insufficient for the flow criteria stated above, culvert sizes were increased base on capacity calculations performed by Design Staff using Culvert Master Software.

Drainage System Design

New drainage systems will be designed to perpetuate existing hydrologic drainage patterns and incorporate Storm Water Design Pollution Prevention and Treatment Best Management Practices (BMPs) to increase water quality treatment, and reduce the probability of flooding and erosion. The drainage design features will include: RSP lined top of cut/toe of fill channels; HMA dike and over-side drains; longitudinal storm drain systems with inlets placed at sag points, medians, and intersections; new and upgraded circular and box culverts with headwall, flared end section, or wing wall end treatments; weir type flow spreaders; biostrips and bioswales; detention basins; and energy dissipaters. Underdrains will be installed as part of retaining wall systems to reduce hydraulic pressure. Detailed analysis will be performed during design phase.

Thurston Creek Recommendations

A revised preliminary hydraulic report from NR Eureka Hydraulics and Structures Hydraulics for the Lake 29 Expressway was performed in December 2011. This work is part of the project proposed in Alternative D, SR 29 four lane expressway. The recommendation chosen is Alternative 1 which proposes to place reinforced box culverts at all Thurston Creek roadway crossings. Alternative 2 proposed multi-span bridge at the SR-281 crossing. A scour evaluation was performed for the proposed bridge at SR-281 using the 100-year flood discharge. The scour conditions at this location are complex with various scour condition such as contraction, pressure, and local pier and abutment scour (please refer to the Revised Preliminary Hydraulic Report for the Advance Planning Study to Widen State Routes 29 and 281 in Appendix D).

Thurston Creek's main and overflow channel culverts at SR 29 will each be upgraded from double barrel CSP arch culverts to three cell (2130 mm x 910 mm) RCB culverts. The new

frontage road "SV0" just upstream and south of SR 29 will have the same three cell RCB culverts installed for the main and overflow channels. Thurston Creek's two cell RCB culvert at SR 281 will be upgraded to a five cell (3660 mm x 1830 mm) RCB culvert. The new frontage road "TA0" just downstream and west of SR 281 will have a two cell (3660 mm x 1830 mm) RCB culvert installed. Thurston Creek channel alignment will be groomed to match the new box culverts and the existing channel. Temporary construction and traffic staging will be necessary for this work. Property owners Paul and Consuela Smith have requested the pond, which forms on their property during the winter season, be perpetuated in the new highway design. Hydraulic engineers met with the Smiths onsite and have determined a new location for the pond.

Inlet/Outlet Treatment

Flared or warped wingwalls, concreted riprap, sacked concrete or slope paving shall be considered at locations where it is deemed necessary to aid in transitioning the approach stream or ditch section to the culvert inlet. These features will be considered at locations where it would be advantageous in reducing flow contraction at the inlet, increase capacity of the culvert, and for maintaining approach velocity at the inlet. Where flow lines do not need to be transitioned flared end sections or concrete headwalls are proposed for inlets/outlet offsite drainage treatment. In locations expected to be cleaned using machinery (e.g. backhoe) a concrete headwall should be considered in lieu of a flared end section to better protect the pipe inlet integrity and longevity. Concrete culvert inlets/outlets structures (e.g. headwall, wingwall) shall be located outside of the highway clear recovery zone. At locations where the culvert headwall cannot be located outside of the clear recovery zone, the headwall shall be shielded or protected. Final inlet/outlet treatment will be developed during PS&E.

Energy Dissipation Requirements

During field visits erosion was observed at the outlet of several culvert sites. Rock Slope Protection (RSP) is recommended for energy dissipation at culvert outlets to minimize erosion at these locations.

Manning Flat

Near Manning Flat KP 40.99 (PM 25.47), Alternative D alignment has been routed south of the existing SR 29 to avoid sensitive environmental resources, vernal pools and endangered plant species. North of the existing SR29 alignment, the current drainage pattern will remain unchanged and the present SR 29 will remain in place as a frontage road.

South of existing SR 29 level spreaders will be placed along the northern edge of the Alternative D alignment in Manning Flat to perpetuate the current drainage pattern. Level spreaders are shallow trenches which fill with water from cross culverts until they weir flow over a level discharge lip. The level lip elevation is set even with the stable or undisturbed vegetated discharge areas. The level spreader will convert concentrated runoff collected from the Alternative D alignment and southern Manning Flat watershed area into sheet flow. The sheet flow will be distributed in such a manner as to maintain the existing drainage patterns between the new alignment and existing SR 29.

The Manning Flat culvert downdrain will be replaced with one reaching the bottom of the Manning Flat gulch adjacent to existing SR 29. Rock slope protection and armoring will also

be installed at the downdrain outlet and down the gulch flow line from the downdrain to Caltrans' right of way (approximately 60 feet from the edge of pavement). In order to prevent undercutting of the RSP, the depth of poor soil should be determined in a design phase Geotechnical Report and either be removed from under the RSP and replaced with compacted imported material or install a concrete pedestal to stabilize the RSP and the immediate outlet area. The water should be slowed at the downstream edge of the base by a small RSP check dam or weir, which will facilitate further energy dissipation through ponding of the concentrated flow. The downdrain and RSP reconstruction coupled with leaving the existing highway in place as a frontage road is expected to arrest the southern expansion of the Manning Flat gulch.

AC Dike

In the design phase, AC dike or slope erosion control BMPs should be considered at locations where there will be long fill slope lengths (where fill slopes are 2m or greater in height) to prevent rills or erosion of the fill slope face. Over-side drains have been considered and placed where feasible to relieve runoff which is collected and conveyed along AC dike that will placed beneath large cut slopes. Preliminary gutter spread has been calculated for the 25 year storm at the cut slopes and was limited to the shoulder, not encroaching into the traveled way. It was necessary to widen the shoulder at specific locations based on these preliminary calculations. Gutter spread will be checked throughout the project, including areas above embankment fill slopes, during the design phase.

In the design phase, the potential for concentrated sheet flow crossing the roadway at superelevated areas will also be checked. Concentrated sheet flow should be limited to no more than 0.003 m^3/s.

Ditches

Roadside, median, and toe of fill ditches will be designed to carry the 25-year storm in the design phase. The flow velocities within the proposed drainage ditches will be calculated using Chapters 860 and 870 of the highway design manual and conform to the guidelines set in Table 862.2 *Recommended Permissible Velocities for Unlined Channels.*

Currently, ditches have been placed at the tops of new cut slopes (slope ditches or slope protection ditches) to intercept offsite flows and minimize erosion of the new slope faces. These "brow" ditches will be lined with RSP and an underlying impermeable liner to prevent runoff carried in the ditch from infiltrating into the adjacent cut slope. Ditches have also been placed at the toe of embankment slopes conveying both offsite and onsite water to through culverts. Ditches have been reviewed and adjusted to work in conjunction with treatment BMPs (bioswales, detention basins, etc.).

Drainage Inlets

Upon preliminary review, drainage inlets have been installed at sag points and in the median ditch where necessary. In the design phase, detailed analysis of locations for drainage inlets will be completed. Drainage inlets will be located where flow and runoff will be conveyed along the edge of the shoulder with AC dike where over-side drains are not feasible: at locations of superelevation transition or reversal; at storm drain systems, and at locations where it is necessary to discharge runoff from a roadside ditch or median ditch. There are

about 33 culverts currently crossing the existing highway, most of which will be removed with the construction of Alternative Alignment D.

Erosion Control Strategy

Erosion will be controlled by incorporating temporary (construction) and permanent erosion control Best Management Practices (BMPs) in the design of the project. These BMPs were selected from the assortment listed in the Caltrans Erosion Control Toolbox along with guidance on erosion control found within the Caltrans Key Concepts Of Sustainable Erosion Control, Technical Guide (November 2010). The selected BMPs are detailed in the Storm Water Data Report, which is included as an attachment to the Project Report. Most of these BMPs have been discussed earlier and a comprehensive list of likely BMPs is provided below. This list is subject to change as design progresses.

PERMANENT BMPs

- Biofiltration Strips
- Biofiltration Swales
- Level Spreader
- Detention Basins
- Detention/Peak Attenuation Basin
- Traction Sand Traps

TEMPORARY BMPs

- Temporary Stream Crossing
- Waste Management & Material Control
- Concrete Waste Management
- Construction Entrance/Exit
- Concrete Washouts
- Drainage Inlet Protection
- Fiber Rolls
- Silt Fence
- Gravel Bag Berm
- Check Dam (concentrated flow interrupter)
- Street Sweeping
- Soil stabilization BMP
- Temporary Fence (Type ESA)
- Temporary Sediment Trap BMP
- Temporary Cover

6- APPENDICES

Not attached, see project file

A. Watershed Maps

B. Hydrology Calculation and Culvert Sizing

C. Floodplain Report

D. Revised Preliminary Hydraulic Report (Structures Hydraulics Memo December 30, 2011)

E. Revised Design Discharges (District 1 Hydraulics Memo November 15, 2005)

01-LAK-29
PM 23.6/31.6
01-2981U0
01 0000 0090

ATTACHMENT R
LEVEL SPREADER REPORT

- LEVEL SPREADERS -
Creating Sheet Flow At
Manning Flat (PM 25.2-25.7)

Lake County-Route 29, PM 23.6-31.6
Highway Improvement Project
01-2981U

FOR THE WIDENING AND REALIGNING OF EXISTING STATE ROUTE 29 FROM DIENER DRIVE INTERSECTION (PM 23.6) TO NEAR THE SR 175 INTERSECTION (PM 31.6) IN LAKE COUNTY, CALIFORNIA

This Report has been prepared under the direction of the following registered civil engineer. The registered civil engineer attests to the technical information contained herein and the engineering data upon which recommendations, conclusions, and decisions are based.

MARK SOBOTA

Mark Sobota
REGISTERED CIVIL ENGINEER

12/9/15
DATE

INTRODUCTION

This report describes, analyzes, and verifies the feasibility of using Level Spreader systems to ensure that sheet flow drainage conditions will be created downstream of the planned roadway fill prism at a specific area bounded by the existing and planned roadway alignments. The project, which is located on State Hwy 29 in Lake County, between the towns of Lowerlake and Kelseyville, between Post Mile Marker 23.6 and Post Mile Marker 31.6, is referred to as the Lake 29 Roadway Improvement Project. It proposes constructing 8-miles of four-lane divided Expressway facility, along a new alignment, consisting of four 12-foot wide lanes (two in each direction), with 5-foot wide inside shoulders, 10-foot wide outside shoulders and a 36-feet wide median.

Due to years of design reviews, studies, analysis, consultation with Resource Agencies, along with the implementation of the results of a formal Value Analysis Study, every aspect of the new alignment has painstakingly been planned and located to eliminate and/or minimize conflicts and impacts to various sensitive resources along the entire 8 mile long alignment. While many significant adjustments to the planned alignment have been made to eliminate or minimize impacts; of particular concern and what is the subject of this report is an analysis of a plan to use Flow Spreaders to ensure that a specific area bound between the existing and the planned new alignment at Manning Flat, will continue to experience sheet flow drainage conditions, as it currently does.

As a result of completed Value Analysis Study, and from consultation with US Fish & Wildlife, as illustrated in Attachment A, the planned alignment at Manning Flat was significantly shifted south so that it does not impact the area that lies between the existing and the new alignment, as this area is habitat for three unique and endangered plant species. While adjusting the footprint of the new alignment so that it doesn't directly fill the sensitive habitat is a critical component, ensuring that no changes in the post-construction drainage is a substantial part of a required plan that ensures the habitat will not be altered by the planned project. It's considered a requirement that post construction, the plant habitat area experience the same sheet flow drainage characteristics that it currently does.

This report presents and discusses potential design issues, methodology, and criteria, along with the required analysis for sizing Level Spreader systems. The report concludes in verifying the feasibility and applicability of using Level Spreaders to ensure the special habitat area for the endangered plants, will experience sheet flow drainage conditions after the project is built.

While there are many variations and options for the material used and type of design for Level Spreaders, some of which have greater tolerances and are more forgiving regarding allowable, construction methods, which results in more flexibility for the contractor to build functioning facilities. For this project, a concrete Level Spreader was chosen as an example design, as there is a higher level of assurance that a concrete Level Spreader can be placed within tight tolerances, as well as it can be easily replicated for situations where several similar, Level Spreaders must be placed adjacent to each other, as is the required situation at Manning Flat. Given that the project has yet to meet PA/ED, many design options exist for different types of Level Spreaders, constructed of different materials, or ones that need to meet different esthetic

requirements. The goal of the report is to verify that using Level Spreader technology at Manning Flat, to ensure sheet flow conditions are re-created, is feasible and will work.

LEVEL SPREADER

A Level Spreader is a commonly used technology that simply creates sheet flow drainage characteristics from a source of concentrated flow. It can be designed in many different methods and configurations, and constructed via many different types of materials. The sole purpose is to create uniform-depth, low velocity, sheet flow drainage pattern, from a concentrated flow source, which is usually a ditch or culvert that is conveying concentrated drainage through a man-made development. A quick search of the internet will result in a variety of information and illustrations for designs where Level Spreader technology has successfully been utilized to mitigate a source of concentrated flow, creating sheet flow conditions for either water quality or increased infiltration purposes. Other than actively collecting concentrated flow into a cistern or large tank, and then utilizing an active device such as a programmed sprinkler system to evenly distribute the concentrated flow across a specified area, which is not cost-effective or easily maintainable, utilization of Level Spreader technology is the only feasible and appropriate technology for creating sheet flow from a source of concentrated flow. In general, given the emphasis that has been placed on minimizing drainage impacts for all types of development by most permitting and resource protection agencies, as well as a requirement by most cities and counties, the use of Level Spreaders is a commonly used technique for creating or re-creating pre-development overland sheet flow conditions and has become the industry standard practice.

While Level Spreader technology is often used in mitigating the concentration of drainage for various types of developments, there are specific issues that must be considered to ensure that the system will work properly and effectively, over the expected life span of the project. While ensuring that the facility is sized appropriately so that it effectively creates sheet flow during minor and major rain events is critical, it is also important to check the capacity at extreme flood events, where high flows could overwhelm the facility and cause downstream slope scour, thereby creating an avenue for concentrated flow conditions to exist and propagate. All are critical considerations that must be taken into account during the design, sizing and analysis.

To create a robust design that will last and properly operates over all ranges of expected flows, considering maintainability, along with proper sizing of all components is critical. Standard hydrology methods and hydraulic calculations for sizing all the components of the system, including all rock-lined ditches and culverts that accept and convey drainage, as well as checking flows through and over the Level Spreaders themselves is required. The flow over the outlet weir device, which is where the flow leaves the Level Spreader as sheet flow must be analyzed for velocity and depth, at each of the various flow rates, which must include a check of the 100 yr flood event. The most critical component of ensuring that a Level Spreader system properly works is to ensure that the constructed elevation along the top of outlet weir remains constant for each system. It doesn't matter if the outlet weir portion is constructed via an impervious dirt berm, or ditch lined with specially graded rock, or made via steel or a high quality concrete, the most critical component is that the top of the weir is constructed all at the same elevation,

because if any location along the weir is lower than other adjacent parts of that distinct weir, concentrated flow will occur.

The grades and contours of the planned toe-of-fill, where Level Spreaders are planned, will dictate the maximum allowable length that individual Level Spreaders can be, as the requirement for a level weir may create a situation where the Level Spreader would require such a substantial foundation that it's too large and infeasible, or otherwise problematic to construct. Given the location(s) and the corresponding ground elevations and contours where the Level Spreader facilities are planned at Manning Flat, several systems were required, as illustrated in Attachment A, ten separate Level Spreader systems were required.

DRAINAGE PATTERNS / FLOW PATHS

As can be seen from Attachment A, runoff from the upland watershed areas above the proposed roadway will flow downslope towards Manning Flat and will first be intercepted and collected in a longitudinal rock-lined brow ditch system. The brow ditches have been placed at the tops of new cut slopes to intercept drainage before it encounters new cut slopes above the new alignment. The brow ditches, just like all ditches that convey concentrated flow, will be lined with rock, to minimize velocity and mitigate scour potential. Drainage from these brow ditches are then conveyed down the slope via rock lined ditches, which are underlined with impermeable membranes, so that concentrated flow can't erode or cause scour. These ditches convey the drainage to special a drainage inlet-sediment traps, prior to flowing under the new alignment via attached cross-culverts. As illustrated in Attachment C, preliminary treatment occurs at the inlet of the cross culverts, via the drainage inlets that also act as sediment traps and debris catchment. This will help keep the Flow Spreaders free of major debris and therefore more reliable and maintainable. Note that the drainage inlet-sediment traps are easier to be clean of sedimentation or collected debris, as compared to anything that is allowed to enter the culverts or the Level Spreaders. Runoff from the roadway itself is directed to drainage inlets in the center median, which are connected to the cross culverts. Roadway drainage is also collected along the asphalt dike and conveyed to the Level Spreaders on the downhill side of the roadway prism.

As the concentrated flow is conveyed into to the Level Spreader devices, located at the toe of the fill on the downslope side, the flow distributes uniformly along the length of the device, decreasing in velocity and losing a majority of its kinetic energy. Once the runoff elevation rises to be equal to, or above that of the outlet weir, which will be dependent upon the capacity of the Level Spreader, as well as the low flow windows, it will then flow over the weirs in a drainage pattern appropriately referred to as weir flow. As illustrated in attachment E, weir flow can be modeled via long-standing empirical equations that can be used to determine flow characteristics, such as depth and velocity. The drainage, which will now have a uniform depth and minimal velocity, will flow onto the downstream area in a sheet flow condition, which is the desired outcome. Although there are many component variations, details and sizes for different Level Spreader designs, for the purpose of this report, rock was placed in the bottom of the Level Spreader to help dissipate energy, as well as on an area immediately downstream of the outlet

weir, to assist ensuring that no erosion takes place while vegetation impacted during the construction phase takes root and is effectively propagated.

To ensure that each Level Spreader system is sized appropriately, it's necessary to perform hydrology and hydraulic analysis of all components, including everything from the drainage basins that deliver concentrated drainage to the various cross culverts and the associated Level Spreader systems themselves. Although all of the hydrology and hydraulics for the watershed, including the rock-lined ditches and the cross-culverts are standard common methods, weir flow hydraulic analysis must be performed to check depth and velocity of the drainage as it flows over the entire length of each of the outlet weirs for each Level Spreader system. Depending upon the final design for the configuration of the weir chosen, the type of weir calculation may slightly vary, although the two common methods for either broad crested weir or a sharp crested weir often result in similar estimated flow characteristics (see Attachment E)

As the final design for the Level Spreader system for this project has yet to be determined, as the project has yet to achieve PA/ED, and since the goal of this report was to verify that a Level Spreader system was feasible at creating required sheet flow conditions, this report chose to look at both a sharp crested weir, as well as a broad crested weir configurations. The corresponding flow depths and velocities, as shown in Attachment E, illustrate that acceptable depths and velocities are developed via all of the modeled flow events, including the 100 yr storm event.

HYDROLOGY

Due to the relatively small watersheds that contribute runoff to the Manning Flat area, the Rational Method (Q=CiA), as described in the Caltrans Highway Design Manual, was used to define each basin's drainage flow rate for the recurrence intervals determined necessary. As illustrated in Attachments A & E, existing and proposed contributing drainage areas were determined and mapped.

The runoff coefficients, "C" values were determined following the standard procedure, as is stated in the Highway Design Manual for undeveloped basins. The four characteristics: relief, soil infiltration, vegetation type & coverage, and surface storage, were all determined and used. The watershed slope profile varies between 30% - 40% percent at the upper portions, to between 0.0% - 6% in the lower reaches. The slope in the area for all of the proposed Level Spreaders varies, but has a maximum grade of 2.5 %, within the vegetated chaparral buffer area. Downstream of the planned roadway prism, which is the area where sheet flow conditions are being replicated, are nearly flat, as they vary from 0.0% - 0.2%.

For the Rational Method, the rainfall intensity (i), in the equation is expressed in inches per hour, and requires that the storm duration and the time of concentration (tc) be equal. Once the time of concentration, (tc), is estimated, the rainfall intensity, (i), corresponding to a storm of equal duration, may be obtained from several available sources, such as intensity-duration-frequency (IDF) curves. Via the NOAA Atlas 14 database, a corresponding precipitation frequency

(rainfall intensity) table was also utilized for the various recurrence intervals determined necessary.

A storm frequency interval of 25 years was used to size roadside ditches/swales, median ditch/swale and toe of fill ditch/swales. The flow velocities within the proposed drainage ditches were calculated using standard methods explained in Chapters 860 and 870 of the Highway Design Manual, and conform to the guidelines set in Table 862.2, "*Recommended Permissible Velocities for Unlined Channels*."

For proper sizing and analyzing the capacity and flow characteristics of the Level Spreaders, as shown in Attachment E, the following recurrence intervals were determined appropriate, per the stated reasons:

- <Q1: A rather small flow rate was chosen so that the analysis could illustrate that the system would operate at small rain events, resolving concerns that small rain events would not result in a drainage run off, and that the required sheet flow conditions couldn't be created. A flow rate of 0.25 cfs was chosen as this event. It was not based on any hydrological determined method, and therefore doesn't reflect how the system will operate at a given probabilistic rain event.
- Q2: Represents a two (2) year event. On average, this flow rate will be exceeded every 2 years, also stated as this flow will have a 50% chance of being exceeded any given year.
- Q10: Represents a ten (10) year event. On average, this flow rate will be exceeded every 10 years, also stated as this flow will have a 10% chance of being exceeded any given year.
- Q100: Represents a one hundred (100) year event. On average, this flow rate will be exceeded every 100 years, also stated as this flow will have a 1% chance of being exceeded any given year.

HYDRAULICS

Per Caltrans' standards for sizing new culvert facilities that flow under and through a roadway prism, a 10-year storm event must be able to be passed without causing the headwater elevation to rise above the inlet top of the culvert (soffit), and the 100-year storm event must be able to be passed without headwaters rising above the elevation of the roadway or causing objectionable backwater that causes damage. Regardless of the results of a hydraulic analysis, for ease of future maintenance, a 24-inch minimum culvert size, regardless of flow characteristics, is the Standard for all new cross culverts.

As presented, for each Level Spreader System, performing the proper hydraulic analysis requires modeling the various flow events identified for each specific watershed, each series of rock-lined ditches, each series of cross-culverts, and determining flow depth and velocities out of each unique Level Spreader, via the below illustrated Weir Flow equation. Note that for different types of weirs, the equation is the same, only the weir coefficients change. Weir coefficients for

various types of weir configurations are published in many different publications. It is assumed that the Level Spreader analyzed in this report functions as a long, broad-crested weir, however, both sharp and broad crested weirs were analyzed and are illustrated in Attachment E.

Flow over a weir is described by the following equation:

$$Q = (Cw * L * H)^{3/2}$$

Where:
Q = Flow (cfs)
L = Length of Level Spreader (feet)
Cw = Weir Coefficient (3.0 for Broad-Crested; 3.33 for Sharp-Crested Weir)
H = Flow/ Head (feet)

POTENTIAL FLOW SPREADER DESIGN

The cross culvert leading to the Level Spreader is designed with a 1% slope, to minimize velocities. At the outlet of the cross culverts is a "T" end section, which directs and dissipates flow into the main body of the Level Spreader (see Attachment D). Rock was chosen to be placed in the bottom of the trough portion to help dissipate energy. The downslope side of the Level Spreader functions as a long, broad-crested weir. A 3 inch outlet opening option was designed along the bottom of the trough, to allow adjustments if extremely low flow conditions are not performing and adjustments in runoff are requested. Runoff enters the concrete trough, it rises until it fills the trough and exits evenly over the weir for the entire length of the Level Spreader. As discussed, the outlet weirs are constructed so they are level along the full length. A plate is designed into the outlet as a levelling adjustment. The systems are designed and located to return the flows to overland flow as close as possible to their original velocity and volume in the same quantity and location, as if they were uninterrupted.

After the drainage passes over the level spreader weir, it enters a minimum sloped area lined with rock, which extends approximately 15 feet out from the outlet weirs. The ends of the concrete Level Spreaders have 5-foot long flared wingwalls to ensure nothing impacts the nearly flat area where the spread of the sheet flow will continue. The sheet flow drainage then flows to the existing riparian buffer consisting of heavily vegetated chaparral. The slope of the vegetated buffer adjacent to the rock slope protection gradually transitions to a virtually nonexistent (≤ 0.5%) slope.

The heavily vegetated chaparral buffer between the proposed alignment and the vernal pools consists mainly of manzanita, which additionally slow the velocity and allow for infiltration. Existing land features downstream from the proposed highway that tend to collect and concentrate water will remain and function the way they do at present. Microdams exist within the plants and surface organics, which increases the infiltration and residence time of water on sloped surfaces. The flat gradient and existing plant residue of the receiving area also prevents rill erosion. For this reason surface runoff from this heavily vegetated areas is minimal.

ANALYSIS & CONCLUSION

As illustrated in all the Attachments, a full hydrologic and hydraulic analysis of a series of 10 Level Spreader systems were discussed, analyzed and designed. Brief discussions of pertinent and critical design elements and issues that must be taken into account and considered were presented. As a result of the following analysis, it is determined the usage of Level Spreaders for the subject project is acceptable:

- sizing of various watershed areas that currently feed the sensitive habitat area of Manning Flat,
- determining appropriate flow rate events to be modeled/analyzed, including minimal events for ensuring that even small rain events will convey drainage to the habitat area; and large extreme flood events (100yr flood), to verify that the Level Spreaders will not be overwhelmed by flows encountered,
- modeling open channel flow for the size of rock-lined brow ditches above and parallel to the new alignment, as well as rock-lined ditches perpendicular to the alignment, that convey drainage from the brow ditches down the slope to the Drainage Inlets,
- sizing of the required cross-culverts,
- sizing and analyzing weir flow characteristics for all determined flow events, verifying that both the size(length) of each Level Spreader is adequate and that sheet flow conditions are created,

The overall analysis shows that, given the designed Level Spreader system chosen, they would adequately function and create sheet flow conditions for the determined flow events. This verifies that the use of a system of Level Spreaders is sufficient and will ensure that all sensitive plant habitat would be subject to the same flow conditions and quantities that they currently encounter. The flow spreaders will safely diffuse flows up to the 100-year storm, without creating velocities or runoff depths that would overwhelm the level spreader systems.

Once PA/ED is achieved, additional consultation will need to be held with Resource Agencies, Local Tribal interests as well as Caltrans Maintenance forces, so that a complete Level Spreader system can be designed. Consultation may likely trigger additional factors that need to be taken into account, such as esthetics, vandalism, and community input. This may initiate the need to develop and analyze other types of Level Spreaders; however, as this report illustrates, Level Spreader technology is feasible for meeting the needs of creating sheet flow conditions at Manning Flat.

ATTACHMENTS

Attachment A……Layout
Attachment B……Hydraulic Calculations
Attachment C……Typical Section
Attachment D……Level Spreader Details
Attachment E……Depths & Velocities
Attachment F……Drainage Details

Dist	COUNTY	ROUTE	KILOMETER POST TOTAL PROJECT	SHEET No.	TOTAL SHEETS

Caltrans Metric

REGISTERED CIVIL ENGINEER DATE

PLANS APPROVAL DATE

REGISTERED PROFESSIONAL ENGINEER No. Exp. CIVIL STATE OF CALIFORNIA

THE STATE OF CALIFORNIA OR ITS OFFICERS OR AGENTS SHALL NOT BE RESPONSIBLE FOR THE ACCURACY OR COMPLETENESS OF ELECTRONIC COPIES OF THIS PLAN SHEET.

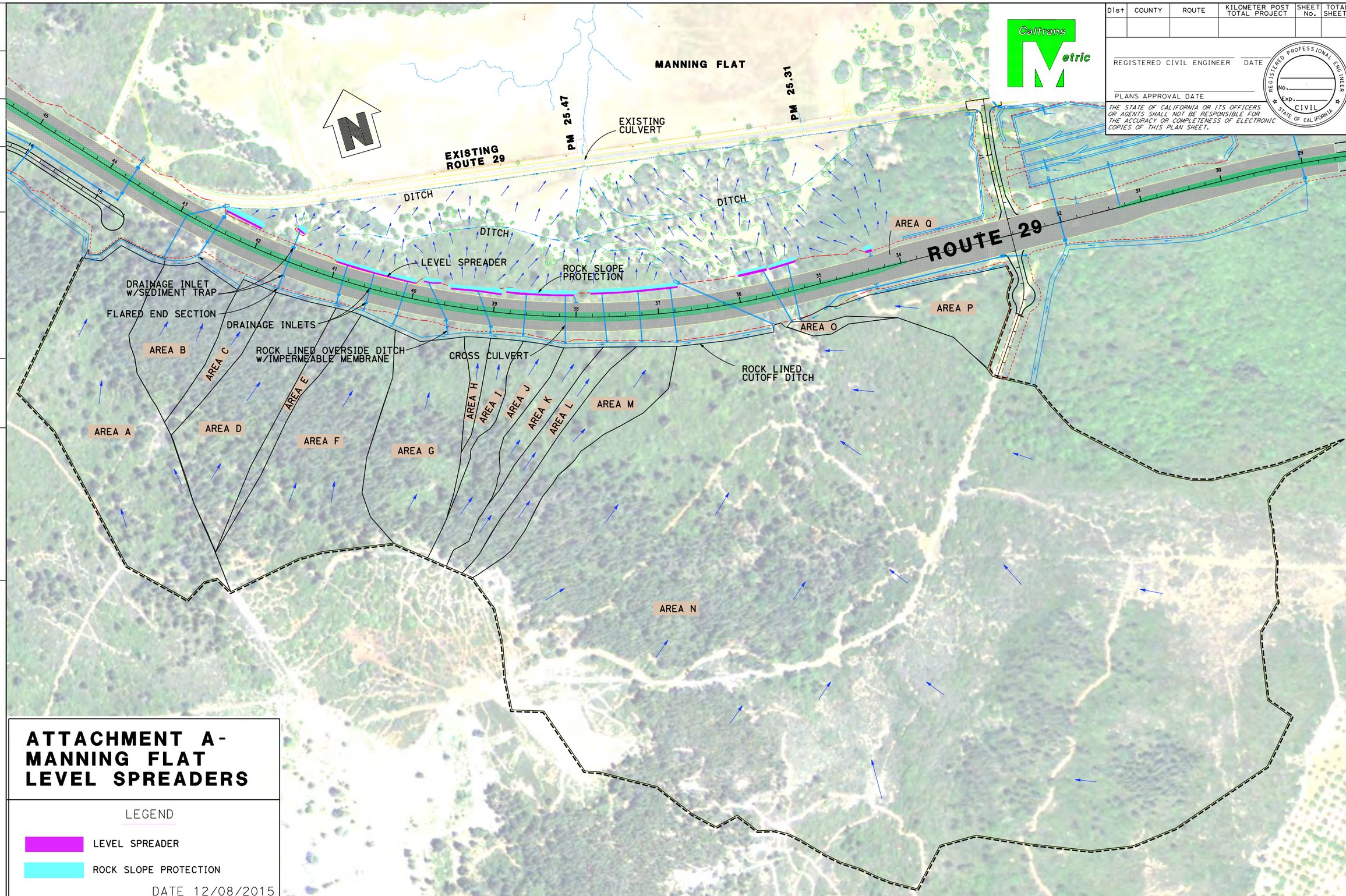

ATTACHMENT A- MANNING FLAT LEVEL SPREADERS

LEGEND

LEVEL SPREADER

ROCK SLOPE PROTECTION

DATE 12/08/2015

REVISED BY | DATE REVISED

CALCULATED-DESIGNED BY | CHECKED BY

FUNCTIONAL SUPERVISOR

STATE OF CALIFORNIA - DEPARTMENT OF TRANSPORTATION

Caltrans

LAST REVISION 00-00-00 | DATE PLOTTED => 09-DEC-2015 | TIME PLOTTED => 09:09

BORDER LAST REVISED 3/1/2007

RELATIVE BORDER SCALE IS IN MILLIMETERS 0 20 40 60 80

USERNAME => s112894
DGN FILE => Layout 09-22-2015.dgn

CU 00000

EA 000000

Attachment B - Hydrologic Calculations

Drainage Area A

Name of Area	A-U1A	A-U1		A-T1	A-T2		A-FES
Description	Existing	Existing		Paved Hwy	Median		Outlet
Surface Type	Pervious	Pervious		Impervious	Pervious		
Drainage Feature			FES			DI-Med	FES
Area (SQFT)	372392	153287		10026	9177		
Area (Acre)	8.55	3.52		0.23	0.21		

Inlet/Outlet Location	A Areas (Acres) Existing	Existing & Cut/Fill	Only Cut/Fill	Median	Paved	Total	C Runoff Coefficients: Existing Relief	Soil Infiltration	Vegetal Control	Surface Storage	C	Existing & Cut/Fill Relief	Soil Infiltration	Vegetal Control	Surface Storage	C	Only Cut/Fill Relief	Soil Infiltration	Vegetal Control	Surface Storage	C	Median Relief	Soil Infiltration	Vegetal Control	Surface Storage	C	Paved Runoff C	Weighted C	C(f) 100 yr C x 1.25	i (NOAA) Rainfall Intensity 0 year	2 year	10 year	100 year	Q (NOAA) Peak Flow (cfs) 0 year	2 year	10 year	100 year	C(F) 100 year
FES	8.55	3.52				12.07	0.18	0.07	0.04	0.09	0.38	0.26	0.07	0.04	0.09	0.46	0.35	0.08	0.06	0.12	0.61	0.08	0.07	0.06	0.08	0.29	0.95	0.40	0.50	0.00	1.23	1.86	2.91	0.00	5.99	9.05	14.16	17.70
DI-Median				0.21	0.23	0.44	0.18	0.07	0.04	0.09	0.38	0.26	0.07	0.04	0.09	0.46	0.35	0.08	0.06	0.12	0.61	0.08	0.07	0.06	0.08	0.29	0.95	0.63	0.79	0.00	1.99	3.03	4.72	0.00	0.56	0.85	1.32	1.65
Outlet																																		0.25	6.54	9.90	15.48	19.36

Drainage Area B

Name of Feature	B-T1		B-T2	B-T3	B-D1		B-T4	B-T5		B-T6		B-LS
Description	Native		Cut Slope	Paved Rd	Paved Ditch		Paved Hwy	Median		Paved Hwy		
Surface Type	Pervious		Pervious	Impervious	Impervious		Impervious	Pervious		Impervious		
Drainage Feature		FES				DI-Med			DI-Med		DI-Shld	Lvl Sprdr
Area (SQFT)	165019		54352	4601	1651		4962	4529		1206		
Area (Acre)	3.79		1.25	0.11	0.04		0.11	0.10		0.03		

Inlet/Outlet Location	A Areas (Acres) Existing & Cut/Fill	Only Cut/Fill	Median	Paved	Total	C Runoff Coefficients: Existing & Cut/Fill Relief	Soil Infiltration	Vegetal Control	Surface Storage	C	Only Cut/Fill Relief	Soil Infiltration	Vegetal Control	Surface Storage	C	Median Relief	Soil Infiltration	Vegetal Control	Surface Storage	C	Paved Runoff C	Weighted C	C(f) 100 yr C x 1.25	i (NOAA) Rainfall Intensity 0 year	2 year	10 year	100 year	Q (NOAA) Peak Flow (cfs) 0 year	2 year	10 year	100 year	C(F) 100 year
FES	3.79	0.00	0.00	0.00	3.79	0.27	0.07	0.04	0.09	0.47	0.35	0.08	0.06	0.12	0.61	0.08	0.07	0.06	0.08	0.29	0.95	0.47	0.59	0.00	1.99	3.03	4.72		3.54	5.39	8.40	10.50
DI-Shld	0.00	1.25	0.00	0.14	1.39	0.27	0.07	0.04	0.09	0.47	0.35	0.08	0.06	0.12	0.61	0.08	0.07	0.06	0.08	0.29	0.95	0.65	0.81	0.00	1.99	3.03	4.72		1.79	2.72	4.24	5.30
DI-Med	0.00	0.00	0.10	0.11	0.22	0.27	0.07	0.04	0.09	0.47	0.35	0.08	0.06	0.12	0.61	0.08	0.07	0.06	0.08	0.29	0.95	0.64	0.79	0.00	1.99	3.03	4.72		0.28	0.42	0.65	0.82
DI-Shld	0.00	0.00	0.00	0.03	0.03	0.27	0.07	0.04	0.09	0.47	0.35	0.08	0.06	0.12	0.61	0.08	0.07	0.06	0.08	0.29	0.95	0.95	1.19	0.00	1.99	3.03	4.72		0.05	0.08	0.12	0.16
Outlet/Lvl Sprdr																												0.25	5.66	8.61	13.42	16.77

Drainage Area C

Name of Area	C-T1		C-T2	C-D1	C-T3	C-D2		C-T4	B-T5	C-T6	C-T7		C-T8	C-T9	C-T10		C-LS
Description	Existing		Cut Slope	Paved Ditch	Cut Slope	Paved Ditch		Mainline	Median	Mainline	Median		Mainline	Cut Slope	Mainline		
Surface Type	Pervious		Pervious	Impervious	Pervious	Impervious		Impervious	Pervious	Impervious	Pervious		Impervious	Pervious	Impervious		
Drainage Feature		FES					DI-Shld					DI-Med				DI-Shld	Lvl Sprdr
Area (SQFT)	70190		22143	1428	9472	1022		12144	11086	8864	8091		12644	2784	2247		
Area (Acre)	1.61		0.51	0.03	0.22	0.02		0.28	0.25	0.20	0.19		0.29	0.06	0.05		

Inlet/Outlet Location	A Areas (Acres) Existing & Cut/Fill	Only Cut/Fill	Median	Paved	Total	C Runoff Coefficients: Existing & Cut/Fill Relief	Soil Infiltration	Vegetal Control	Surface Storage	C	Only Cut/Fill Relief	Soil Infiltration	Vegetal Control	Surface Storage	C	Median Relief	Soil Infiltration	Vegetal Control	Surface Storage	C	Paved Runoff C	Weighted C	C(f) 100 yr C x 1.25	i (NOAA) Rainfall Intensity 0 year	2 year	10 year	100 year	Q (NOAA) Peak Flow (cfs) 0 year	2 year	10 year	100 year	C(F) 100 year
FES	1.61	0.00	0.00	0.00	1.61	0.30	0.07	0.04	0.10	0.51	0.35	0.08	0.06	0.12	0.61	0.08	0.07	0.06	0.08	0.29	0.95	0.51	0.64	0.00	1.99	3.03	4.72	0.00	1.64	2.49	3.88	4.85
DI-Shld	0.00	0.73	0.00	0.06	0.79	0.30	0.07	0.04	0.10	0.51	0.35	0.08	0.06	0.12	0.61	0.08	0.07	0.06	0.08	0.29	0.95	0.63	0.79	0.00	1.99	3.03	4.72	0.00	0.99	1.50	2.34	2.93
DI-Med	0.00	0.00	0.44	0.48	0.92	0.30	0.07	0.04	0.10	0.51	0.35	0.08	0.06	0.12	0.61	0.08	0.07	0.06	0.08	0.29	0.95	0.64	0.79	0.00	1.99	3.03	4.72	0.00	1.17	1.78	2.77	3.46
DI-Shld	0.00	0.06	0.00	0.34	0.41	0.30	0.07	0.04	0.10	0.51	0.35	0.08	0.06	0.12	0.61	0.08	0.07	0.06	0.08	0.29	0.95	0.90	1.12	0.00	1.99	3.03	4.72	0.00	0.72	1.10	1.72	2.15
Outlet/Lvl Sprdr																												0.25	4.51	6.87	10.70	13.38

Drainage Area D

Name of Area	D-T1A	D-T1		D-T2	D-D1		D-T3	D-T4		D-T5		D-LS
Description	Existing	Existing		Cut Slope	Paved Ditch		Paved Hwy	Median		Paved Hwy		
Surface Type	Pervious	Pervious		Pervious	Impervious		Impervious	Pervious		Impervious		
Drainage Feature			FES			DI-Shld			DI-Med		DI-Shld	Lvl Sprdr
Area (SQFT)	100036	156843		3027	493		4345	3967		4399		
Area (Acre)	2.30	3.60		0.07	0.01		0.10	0.09		0.10		

Inlet/Outlet Location	A Areas (Acres) Existing	Existing & Cut/Fill	Only Cut/Fill	Median	Paved	Total	C Runoff Coefficients: Existing Relief	Soil Infiltration	Vegetal Control	Surface Storage	C	Existing & Cut/Fill Relief	Soil Infiltration	Vegetal Control	Surface Storage	C	Only Cut/Fill Relief	Soil Infiltration	Vegetal Control	Surface Storage	C	Median Relief	Soil Infiltration	Vegetal Control	Surface Storage	C	Paved Runoff C	Weighted C	C(f) 100 yr C x 1.25	i (NOAA) Rainfall Intensity 0 year	2 year	10 year	100 year	Q (NOAA) Peak Flow (cfs) 0 year	2 year	10 year	100 year	C(F) 100 year
FES	2.30	3.60	0.00	0.00	0.00	5.90	0.22	0.07	0.04	0.09	0.42	0.28	0.07	0.04	0.09	0.48	0.35	0.08	0.06	0.12	0.61	0.08	0.07	0.06	0.08	0.29	0.95	0.46	0.57	0.00	1.68	2.55	3.98		4.52	6.87	10.72	13.40
DI-Shld	0.00	0.00	0.07	0.00	0.01	0.08	0.22	0.07	0.04	0.09	0.42	0.28	0.07	0.04	0.09	0.48	0.35	0.08	0.06	0.12	0.61	0.08	0.07	0.06	0.08	0.29	0.95	0.66	0.82	0.00	1.99	3.03	4.72		0.11	0.16	0.25	0.31
DI-Med	0.00	0.00	0.00	0.09	0.10	0.19	0.22	0.07	0.04	0.09	0.42	0.28	0.07	0.04	0.09	0.48	0.35	0.08	0.06	0.12	0.61	0.08	0.07	0.06	0.08	0.29	0.95	0.64	0.79	0.00	1.99	3.03	4.72		0.24	0.37	0.57	0.71
DI-Shld	0.00	0.00	0.00	0.00	0.10	0.10	0.22	0.07	0.04	0.09	0.42	0.28	0.07	0.04	0.09	0.48	0.35	0.08	0.06	0.12	0.61	0.08	0.07	0.06	0.08	0.29	0.95	0.95	1.19	0.00	1.99	3.03	4.72		0.19	0.29	0.45	0.57
Outlet/Lvl Sprdr																																		0.25	5.06	7.69	11.99	14.99

Drainage Area E

Name of Area	E-T1A	E-T1		E-T2	E-D1		E-T3	E-T4		E-T5		E-LS
Description	Existing	Existing		Cut Slope	Paved Ditch		Paved Hwy	Median		Paved Hwy		
Surface Type	Pervious	Pervious		Pervious	Impervious		Impervious	Pervious		Impervious		
Drainage Feature			FES			DI-Shld			DI-Med		DI-Shld	Lvl Sprdr
Area (SQFT)	13381	43514		4919	569		5224	4767		5494		
Area (Acre)	0.31	1.00		0.11	0.01		0.12	0.11		0.13		

Inlet/Outlet Location	A Areas (Acres) Existing	Existing & Cut/Fill	Only Cut/Fill	Median	Paved	Total	C Runoff Coefficients: Existing Relief	Soil Infiltration	Vegetal Control	Surface Storage	C	Existing & Cut/Fill Relief	Soil Infiltration	Vegetal Control	Surface Storage	C	Only Cut/Fill Relief	Soil Infiltration	Vegetal Control	Surface Storage	C	Median Relief	Soil Infiltration	Vegetal Control	Surface Storage	C	Paved Runoff C	Weighted C	C(f) 100 yr C x 1.25	i (NOAA) Rainfall Intensity 0 year	2 year	10 year	100 year	Q (NOAA) Peak Flow (cfs) 0 year	2 year	10 year	100 year	C(F) 100 year
FES	0.31	1.00				1.31	0.22	0.07	0.04	0.09	0.42	0.28	0.07	0.04	0.09	0.48	0.35	0.08	0.06	0.12	0.61	0.08	0.07	0.06	0.08	0.29	0.95	0.47	0.58	0.00	1.57	2.38	3.72		0.96	1.45	2.26	2.83
DI-Shld			0.11		0.01	0.13	0.22	0.07	0.04	0.09	0.42	0.28	0.07	0.04	0.09	0.48	0.35	0.08	0.06	0.12	0.61	0.08	0.07	0.06	0.08	0.29	0.95	0.65	0.81	0.00	1.99	3.03	4.72		0.16	0.25	0.38	0.48
DI-Med				0.11	0.12	0.23	0.22	0.07	0.04	0.09	0.42	0.28	0.07	0.04	0.09	0.48	0.35	0.08	0.06	0.12	0.61	0.08	0.07	0.06	0.08	0.29	0.95	0.64	0.79	0.00	1.99	3.03	4.72		0.29	0.44	0.69	0.86
DI-Shld					0.13	0.13	0.22	0.07	0.04	0.09	0.42	0.28	0.07	0.04	0.09	0.48	0.35	0.08	0.06	0.12	0.61	0.08	0.07	0.06	0.08	0.29	0.95	0.95	1.19	0.00	1.99	3.03	4.72		0.24	0.36	0.57	0.71
Outlet/Lvl Sprdr																																		0.25	1.65	2.50	3.90	4.88

Attachment B - Hydrologic Calculations

Drainage Area F

Name of Area	F-T1A	F-T1		F-T2	F-D1		F-T3	F-T4		F-T5		F-LS
Description	Existing	Existing		Cut Slope	Paved Ditch		Paved Hwy	Median		Paved Hwy		
Surface Type	Pervious	Pervious		Pervious	Impervious		Impervious	Pervious		Impervious		
Drainage Feature			FES			Di-Shld			Di-Med		Di-Shld	Lvl Sprdr
Area (SQFT)	197730	185026		5596	847		5665	5171		3921		
Area (Acre)	4.54	4.25		0.13	0.02		0.13	0.12		0.09		

Inlet/Outlet Location	A Areas: Existing	Existing & Cut/Fill	Only Cut/Fill	Median	Paved	Total	C Existing: Relief	Soil Infiltration	Vegetal Control	Surface Storage	C	Existing & Cut/Fill: Relief	Soil Infiltration	Vegetal Control	Surface Storage	C	Only Cut/Fill: Relief	Soil Infiltration	Vegetal Control	Surface Storage	C	Median: Relief	Soil Infiltration	Vegetal Control	Surface Storage	C	Paved Runoff C	Weighted C	C(f) 100 yr C x 1.25	I (NOAA) Rainfall Intensity: 0 year	2 year	10 year	100 year	Q (NOAA) Peak Flow (cfs): 0 year	2 year	10 year	100 year	C(F) 100 year
	Acres																																						
FES	4.54	4.25				8.79	0.20	0.07	0.04	0.09	0.40	0.28	0.07	0.04	0.09	0.48	0.35	0.08	0.06	0.12	0.61	0.08	0.07	0.06	0.08	0.29	0.95	0.44	0.55	0.00	1.40	2.13	3.32		5.40	8.21	12.80	16.00
Di-Shld			0.13		0.02	0.15	0.22	0.07	0.04	0.09	0.42	0.28	0.07	0.04	0.09	0.48	0.35	0.08	0.06	0.12	0.61	0.08	0.07	0.06	0.08	0.29	0.95	0.65	0.82	0.00	1.99	3.03	4.72		0.19	0.29	0.46	0.57
Di-Med				0.12	0.13	0.25	0.22	0.07	0.04	0.09	0.42	0.28	0.07	0.04	0.09	0.48	0.35	0.08	0.06	0.12	0.61	0.08	0.07	0.06	0.08	0.29	0.95	0.64	0.79	0.00	1.99	3.03	4.72		0.31	0.48	0.75	0.93
Di-Shld					0.09	0.09	0.22	0.07	0.04	0.09	0.42	0.28	0.07	0.04	0.09	0.48	0.35	0.08	0.06	0.12	0.61	0.08	0.07	0.06	0.08	0.29	0.95	0.95	1.19	0.00	1.99	3.03	4.72		0.17	0.26	0.40	0.50
Outlet/Lvl Sprdr																																		0.25	6.07	9.24	14.40	18.00

Drainage Area G

Name of Area	G-T1A	G-T1		G-T2	G-D1		G-T3	G-T4		G-T5		G-LS
Description	Existing	Existing		Cut Slope	Paved Ditch		Paved Hwy	Median		Paved Hwy		
Surface Type	Pervious	Pervious		Pervious	Impervious		Impervious	Pervious		Impervious		
Drainage Feature			FES			Di-Shld			Di-Med		Di-Shld	Lvl Sprdr
Area (SQFT)	152972	127369		5342	770		7220	6590		7777		
Area (Acre)	3.51	2.92		0.12	0.02		0.17	0.15		0.18		

Inlet/Outlet Location	A Areas: Existing	Existing & Cut/Fill	Only Cut/Fill	Median	Paved	Total	C Existing: Relief	Soil Infiltration	Vegetal Control	Surface Storage	C	Existing & Cut/Fill: Relief	Soil Infiltration	Vegetal Control	Surface Storage	C	Only Cut/Fill: Relief	Soil Infiltration	Vegetal Control	Surface Storage	C	Median: Relief	Soil Infiltration	Vegetal Control	Surface Storage	C	Paved Runoff C	Weighted C	C(f) 100 yr C x 1.25	I (NOAA) Rainfall Intensity: 0 year	2 year	10 year	100 year	Q (NOAA) Peak Flow (cfs): 0 year	2 year	10 year	100 year	C(F) 100 year
	Acres																																						
FES	3.51	2.92				6.44	0.30	0.07	0.04	0.09	0.50	0.23	0.07	0.04	0.09	0.43	0.35	0.08	0.06	0.12	0.61	0.08	0.07	0.06	0.08	0.29	0.95	0.47	0.59	0.00	1.99	3.03	4.72		6.00	9.13	14.22	17.78
Di-Shld			0.12		0.02	0.14	0.22	0.07	0.04	0.09	0.42	0.28	0.07	0.04	0.09	0.48	0.35	0.08	0.06	0.12	0.61	0.08	0.07	0.06	0.08	0.29	0.95	0.65	0.82	0.00	1.99	3.03	4.72		0.18	0.28	0.43	0.54
Di-Med				0.15	0.17	0.32	0.22	0.07	0.04	0.09	0.42	0.28	0.07	0.04	0.09	0.48	0.35	0.08	0.06	0.12	0.61	0.08	0.07	0.06	0.08	0.29	0.95	0.64	0.79	0.00	1.99	3.03	4.72		0.40	0.61	0.95	1.19
Di-Shld					0.18	0.18	0.22	0.07	0.04	0.09	0.42	0.28	0.07	0.04	0.09	0.48	0.35	0.08	0.06	0.12	0.61	0.08	0.07	0.06	0.08	0.29	0.95	0.95	1.19	0.00	1.99	3.03	4.72		0.34	0.51	0.80	1.00
Outlet/Lvl Sprdr																																		0.25	6.92	10.53	16.41	20.51

Drainage Area H

Name of Area	H-T1		H-T2	H-D1		H-T3	H-T4		H-T5		H-LS
Description	Existing		Cut Slope	Paved Ditch		Paved Hwy	Median		Paved Hwy		
Surface Type	Pervious		Pervious	Impervious		Impervious	Pervious		Impervious		
Drainage Feature		FES			Di-Shld			Di-Med		Di-Shld	Lvl Sprdr
Area (SQFT)	26870		532	365		6111	5578		7320		
Area (Acre)	0.62		0.01	0.01		0.14	0.13		0.17		

Inlet/Outlet Location	A Areas: Existing	Existing & Cut/Fill	Only Cut/Fill	Median	Paved	Total	C Existing: Relief	Soil Infiltration	Vegetal Control	Surface Storage	C	Existing & Cut/Fill: Relief	Soil Infiltration	Vegetal Control	Surface Storage	C	Only Cut/Fill: Relief	Soil Infiltration	Vegetal Control	Surface Storage	C	Median: Relief	Soil Infiltration	Vegetal Control	Surface Storage	C	Paved Runoff C	Weighted C	C(f) 100 yr C x 1.25	I (NOAA) Rainfall Intensity: 0 year	2 year	10 year	100 year	Q (NOAA) Peak Flow (cfs): 0 year	2 year	10 year	100 year	C(F) 100 year
	Acres																																						
FES		0.62				0.62	0.22	0.07	0.04	0.09	0.42	0.23	0.07	0.04	0.09	0.43	0.35	0.08	0.06	0.12	0.61	0.08	0.07	0.06	0.08	0.29	0.95	0.43	0.54	0.00	1.99	3.03	4.72		0.53	0.80	1.25	1.56
Di-Shld			0.01		0.01	0.02	0.22	0.07	0.04	0.09	0.42	0.28	0.07	0.04	0.09	0.48	0.35	0.08	0.06	0.12	0.61	0.08	0.07	0.06	0.08	0.29	0.95	0.75	0.94	0.00	1.99	3.03	4.72		0.03	0.05	0.07	0.09
Di-Med				0.13	0.14	0.27	0.22	0.07	0.04	0.09	0.42	0.28	0.07	0.04	0.09	0.48	0.35	0.08	0.06	0.12	0.61	0.08	0.07	0.06	0.08	0.29	0.95	0.64	0.79	0.00	1.99	3.03	4.72		0.34	0.52	0.80	1.01
Di-Shld					0.17	0.17	0.22	0.07	0.04	0.09	0.42	0.28	0.07	0.04	0.09	0.48	0.35	0.08	0.06	0.12	0.61	0.08	0.07	0.06	0.08	0.29	0.95	0.95	1.19	0.00	1.99	3.03	4.72		0.32	0.48	0.75	0.94
Outlet/Lvl Sprdr																																		0.25	1.22	1.85	2.88	3.60

Drainage Area I

Name of Area	I-T1A	I-T1		I-T2	I-T3		I-T4		I-LS
Description	Existing	Existing/Fill		Paved Hwy	Median		Paved Hwy		
Surface Type	Pervious	Pervious		Impervious	Pervious		Impervious		
Drainage Feature			FES			Di-Med		Di-Shld	Lvl Sprdr
Area (SQFT)	5614	42384		6244	5699		6253		
Area (Acre)	0.13	0.97		0.14	0.13		0.14		

Inlet/Outlet Location	A Areas: Existing	Existing & Cut/Fill	Only Cut/Fill	Median	Paved	Total	C Existing: Relief	Soil Infiltration	Vegetal Control	Surface Storage	C	Existing & Cut/Fill: Relief	Soil Infiltration	Vegetal Control	Surface Storage	C	Only Cut/Fill: Relief	Soil Infiltration	Vegetal Control	Surface Storage	C	Median: Relief	Soil Infiltration	Vegetal Control	Surface Storage	C	Paved Runoff C	Weighted C	C(f) 100 yr C x 1.25	I (NOAA) Rainfall Intensity: 0 year	2 year	10 year	100 year	Q (NOAA) Peak Flow (cfs): 0 year	2 year	10 year	100 year	C(F) 100 year
	Acres																																						
FES	0.13	0.97				1.10	0.30	0.07	0.04	0.09	0.50	0.23	0.07	0.04	0.09	0.43	0.35	0.08	0.06	0.12	0.61	0.08	0.07	0.06	0.08	0.29	0.95	0.44	0.55	0.00	1.99	3.03	4.72		0.96	1.46	2.28	2.85
Di-Med				0.13	0.14	0.27	0.22	0.07	0.04	0.09	0.42	0.28	0.07	0.04	0.09	0.48	0.35	0.08	0.06	0.12	0.61	0.08	0.07	0.06	0.08	0.29	0.95	0.64	0.79	0.00	1.99	3.03	4.72		0.35	0.53	0.82	1.03
Di-Shld					0.14	0.14	0.22	0.07	0.04	0.09	0.42	0.28	0.07	0.04	0.09	0.48	0.35	0.08	0.06	0.12	0.61	0.08	0.07	0.06	0.08	0.29	0.95	0.95	1.19	0.00	1.99	3.03	4.72		0.27	0.41	0.64	0.80
Outlet/Lvl Sprdr																																		0.25	1.58	2.40	3.74	4.68

Drainage Area J

Name of Area	J-T1A	J-T1		J-T2	J-T3		J-T4		J-LS
Description	Existing	Existing & Fill		Paved Hwy	Median		Paved Hwy		
Surface Type	Pervious	Pervious		Impervious	Pervious		Impervious		
Drainage Feature			FES			Di-Med		Di-Shld	Lvl Sprdr
Area (SQFT)	53418	68171		6011	5487		5947		
Area (Acre)	1.23	1.57		0.14	0.13		0.14		

Inlet/Outlet Location	A Areas: Existing	Existing & Cut/Fill	Only Cut/Fill	Median	Paved	Total	C Existing: Relief	Soil Infiltration	Vegetal Control	Surface Storage	C	Existing & Cut/Fill: Relief	Soil Infiltration	Vegetal Control	Surface Storage	C	Only Cut/Fill: Relief	Soil Infiltration	Vegetal Control	Surface Storage	C	Median: Relief	Soil Infiltration	Vegetal Control	Surface Storage	C	Paved Runoff C	Weighted C	C(f) 100 yr C x 1.25	I (NOAA) Rainfall Intensity: 0 year	2 year	10 year	100 year	Q (NOAA) Peak Flow (cfs): 0 year	2 year	10 year	100 year	C(F) 100 year
	Acres																																						
FES	1.23	1.57				2.79	0.29	0.07	0.04	0.09	0.49	0.22	0.07	0.04	0.09	0.42	0.35	0.08	0.06	0.12	0.61	0.08	0.07	0.06	0.08	0.29	0.95	0.45	0.56	0.00	1.68	2.55	3.98		2.11	3.21	5.01	6.26
Di-Med				0.13	0.14	0.26	0.22	0.07	0.04	0.09	0.42	0.28	0.07	0.04	0.09	0.48	0.35	0.08	0.06	0.12	0.61	0.08	0.07	0.06	0.08	0.29	0.95	0.64	0.79	0.00	1.99	3.03	4.72		0.33	0.51	0.79	0.99
Di-Shld					0.14	0.14	0.22	0.07	0.04	0.09	0.42	0.28	0.07	0.04	0.09	0.48	0.35	0.08	0.06	0.12	0.61	0.08	0.07	0.06	0.08	0.29	0.95	0.95	1.19	0.00	1.99	3.03	4.72		0.26	0.39	0.61	0.77
Outlet/Lvl Sprdr																																		0.25	2.71	4.11	6.41	8.01

Attachment B - Hydrologic Calculations

Drainage Area K

Name of Area	K-T1A	K-T1		K-T2	K-T3		K-T4		K-L5
Description	Existing	Existing & Fill		Paved Hwy	Median		Paved Hwy		
Surface Type	Pervious	Pervious		Impervious	Pervious		Impervious		
Drainage Feature			FES			DI-Med		DI-Shld	Lvl Sprdr
Area (SQFT)	5029	64480		5493	5012		5697		
Area (Acre)	0.12	1.48		0.13	0.12		0.13		

Inlet/Outlet Location	A Areas (Acres) Existing	Existing & Cut/Fill	Only Cut/Fill	Median	Paved	Total	C Runoff Coefficients: Existing Relief	Soil Infiltration	Vegetal Control	Surface Storage	C	Existing & Cut/Fill Relief	Soil Infiltration	Vegetal Control	Surface Storage	C	Only Cut/Fill Relief	Soil Infiltration	Vegetal Control	Surface Storage	C	Median Relief	Soil Infiltration	Vegetal Control	Surface Storage	C	Paved Runoff C	Weighted C	C(f) 100 yr C x 1.25	i (NOAA) Rainfall Intensity 0 year	2 year	10 year	100 year	Q (NOAA) Peak Flow (cfs) 0 year	2 year	10 year	100 year	C(F) 100 year
FES	0.12	1.48				1.60	0.29	0.07	0.04	0.09	0.49	0.22	0.07	0.04	0.09	0.42	0.35	0.08	0.06	0.12	0.61	0.08	0.07	0.06	0.08	0.29	0.95	0.43	0.53	0.00	1.82	2.76	4.30		1.23	1.87	2.92	3.65
DI-Med				0.12	0.13	0.24	0.22	0.07	0.04	0.09	0.42	0.28	0.07	0.04	0.09	0.48	0.35	0.08	0.06	0.12	0.61	0.08	0.07	0.06	0.08	0.29	0.95	0.64	0.79	0.00	1.99	3.03	4.72		0.30	0.46	0.72	0.90
DI-Shld					0.13	0.13	0.22	0.07	0.04	0.09	0.42	0.28	0.07	0.04	0.09	0.48	0.35	0.08	0.06	0.12	0.61	0.08	0.07	0.06	0.08	0.29	0.95	0.95	1.19	0.00	1.99	3.03	4.72		0.25	0.38	0.59	0.73
Outlet/Lvl Sprdr																																		0.25	1.79	2.71	4.23	5.28

Drainage Area L

Name of Area	L-T1A	L-T1		L-T2	L-T3		L-T4		L-L5
Description	Existing	Existing & Fill		Paved Hwy	Median		Paved Hwy		
Surface Type	Pervious	Pervious		Impervious	Pervious		Impervious		
Drainage Feature			FES			DI-Med		DI-Shld	Lvl Sprdr
Area (SQFT)	35799	55289		5194	4741		5234		
Area (Acre)	0.82	1.27		0.12	0.11		0.12		

Inlet/Outlet Location	A Areas (Acres) Existing	Existing & Cut/Fill	Only Cut/Fill	Median	Paved	Total	C Runoff Coefficients: Existing Relief	Soil Infiltration	Vegetal Control	Surface Storage	C	Existing & Cut/Fill Relief	Soil Infiltration	Vegetal Control	Surface Storage	C	Only Cut/Fill Relief	Soil Infiltration	Vegetal Control	Surface Storage	C	Median Relief	Soil Infiltration	Vegetal Control	Surface Storage	C	Paved Runoff C	Weighted C	C(f) 100 yr C x 1.25	i (NOAA) Rainfall Intensity 0 year	2 year	10 year	100 year	Q (NOAA) Peak Flow (cfs) 0 year	2 year	10 year	100 year	C(F) 100 year
FES	0.82	1.27				2.09	0.29	0.07	0.04	0.09	0.49	0.22	0.07	0.04	0.09	0.42	0.35	0.08	0.06	0.12	0.61	0.08	0.07	0.06	0.08	0.29	0.95	0.45	0.56	0.00	1.57	2.38	3.72		1.47	2.23	3.48	4.35
DI-Med				0.11	0.12	0.23	0.22	0.07	0.04	0.09	0.42	0.28	0.07	0.04	0.09	0.48	0.35	0.08	0.06	0.12	0.61	0.08	0.07	0.06	0.08	0.29	0.95	0.64	0.79	0.00	1.99	3.03	4.72		0.29	0.44	0.68	0.85
DI-Shld					0.12	0.12	0.22	0.07	0.04	0.09	0.42	0.28	0.07	0.04	0.09	0.48	0.35	0.08	0.06	0.12	0.61	0.08	0.07	0.06	0.08	0.29	0.95	0.95	1.19	0.00	1.99	3.03	4.72		0.23	0.35	0.54	0.67
Outlet/Lvl Sprdr																																		0.25	1.98	3.01	4.70	5.88

Drainage Area M

Name of Area	M-T1A	M-T1		M-T2	M-T3		M-T4		M-L5
Description	Existing	Existing & Fill		Paved Hwy	Median		Paved Hwy		
Surface Type	Pervious	Pervious		Impervious	Pervious		Impervious		
Drainage Feature			FES			DI-Med		DI-Shld	Lvl Sprdr
Area (SQFT)	41237	114398		8586	7837		5348		
Area (Acre)	0.95	2.63		0.20	0.18		0.12		

Inlet/Outlet Location	A Areas (Acres) Existing	Existing & Cut/Fill	Only Cut/Fill	Median	Paved	Total	C Runoff Coefficients: Existing Relief	Soil Infiltration	Vegetal Control	Surface Storage	C	Existing & Cut/Fill Relief	Soil Infiltration	Vegetal Control	Surface Storage	C	Only Cut/Fill Relief	Soil Infiltration	Vegetal Control	Surface Storage	C	Median Relief	Soil Infiltration	Vegetal Control	Surface Storage	C	Paved Runoff C	Weighted C	C(f) 100 yr C x 1.25	i (NOAA) Rainfall Intensity 0 year	2 year	10 year	100 year	Q (NOAA) Peak Flow (cfs) 0 year	2 year	10 year	100 year	C(F) 100 year
FES	0.95	2.63				3.57	0.29	0.07	0.04	0.09	0.49	0.21	0.07	0.04	0.09	0.41	0.35	0.08	0.06	0.12	0.61	0.08	0.07	0.06	0.08	0.29	0.95	0.43	0.54	0.00	1.48	2.25	3.50	0.00	2.28	3.47	5.39	6.74
DI-Med				0.18	0.20	0.38	0.22	0.07	0.04	0.09	0.42	0.28	0.07	0.04	0.09	0.48	0.35	0.08	0.06	0.12	0.61	0.08	0.07	0.06	0.08	0.29	0.95	0.64	0.79	0.00	1.99	3.03	4.72	0.00	0.48	0.73	1.13	1.41
DI-Shld					0.12	0.12	0.22	0.07	0.04	0.09	0.42	0.28	0.07	0.04	0.09	0.48	0.35	0.08	0.06	0.12	0.61	0.08	0.07	0.06	0.08	0.29	0.95	0.95	1.19	0.00	1.99	3.03	4.72	0.00	0.23	0.35	0.55	0.69
Outlet/Lvl Sprdr																																		0.25	2.99	4.55	7.07	8.84

Drainage Area N

Name of Area	N-U1B	N-U1A	N-U1		N-T1	N-T2	N-T3		Outlet
Function	Existing	Existing	Existing & Fill		Paved Hwy	Median	Paved Hwy		
Surface Type	Pervious	Pervious	Pervious		Impervious	Pervious	Impervious		
Drainage Feature				HW/WW			DI-Med	DI-Shld	HW/WW
Area (SQFT)	2240032	1947278	908253		7568	6908	10404		
Area (Acre)	51.42	44.70	20.85		0.17	0.16	0.24		

Inlet/Outlet Location	A Areas (Acres) Existing	Existing	Existing & Cut/Fill	Only Cut/Fill	Median	Paved	Total	C Runoff Coefficients: Existing Relief	Soil Infiltration	Vegetal Control	Surface Storage	C	Existing Relief	Soil Infiltration	Vegetal Control	Surface Storage	C	Existing & Cut/Fill Relief	Soil Infiltration	Vegetal Control	Surface Storage	C	Only Cut/Fill Relief	Soil Infiltration	Vegetal Control	Surface Storage	C	Median Relief	Soil Infiltration	Vegetal Control	Surface Storage	C	Paved Runoff C	Weighted C	C(f) 100 yr C x 1.25	i (NOAA) Rainfall Intensity 0 year	2 year	10 year	100 year	Q (NOAA) Peak Flow (cfs) 0 year	2 year	10 year	100 year	C(F) 100 year
HW/WW	51.42	44.70	20.85				116.99	0.18	0.07	0.04	0.09	0.38	0.25	0.07	0.04	0.09	0.45	0.10	0.07	0.04	0.09	0.30	0.35	0.08	0.06	0.12	0.61	0.08	0.07	0.06	0.08	0.29	0.95	0.39	0.49	0.00	0.65	0.99	1.55		29.84	45.45	71.16	88.96
DI-Med					0.16	0.17	0.33	0.22	0.07	0.04	0.09	0.42	0.28	0.07	0.04	0.09	0.48	0.28	0.07	0.04	0.09	0.48	0.35	0.08	0.06	0.12	0.61	0.08	0.07	0.06	0.08	0.29	0.95	0.64	0.79	0.00	1.99	3.03	4.72		0.42	0.64	1.00	1.25
DI-Shld						0.24	0.24	0.22	0.07	0.04	0.09	0.42	0.28	0.07	0.04	0.09	0.48	0.28	0.07	0.04	0.09	0.48	0.35	0.08	0.06	0.12	0.61	0.08	0.07	0.06	0.08	0.29	0.95	0.95	0.47	0.00	1.99	3.03	4.72		0.45	0.69	1.07	0.53
HW/WW																																								0.25	30.26	46.09	72.16	90.20

Drainage Area O

Name of Area	O-T1		O-T2	O-T3		O-T4		O-L5
Description	Existing & Fill		Paved Hwy	Median		Paved Hwy		
Surface Type	Pervious		Impervious	Pervious		Impervious		
Drainage Feature		FES			DI-Med		DI-Shld	Lvl Sprdr
Area (SQFT)	18646		2702	2471		3444		
Area (Acre)	0.43		0.06	0.06		0.08		

Inlet/Outlet Location	A Areas (Acres) Existing	Existing & Cut/Fill	Only Cut/Fill	Median	Paved	Total	C Runoff Coefficients: Existing Relief	Soil Infiltration	Vegetal Control	Surface Storage	C	Existing & Cut/Fill Relief	Soil Infiltration	Vegetal Control	Surface Storage	C	Only Cut/Fill Relief	Soil Infiltration	Vegetal Control	Surface Storage	C	Median Relief	Soil Infiltration	Vegetal Control	Surface Storage	C	Paved Runoff C	Weighted C	C(f) 100 yr C x 1.25	i (NOAA) Rainfall Intensity 0 year	2 year	10 year	100 year	Q (NOAA) Peak Flow (cfs) 0 year	2 year	10 year	100 year	C(F) 100 year
FES		0.43				0.43	0.15	0.08	0.04	0.09	0.36	0.28	0.08	0.04	0.09	0.49	0.35	0.08	0.06	0.12	0.61	0.08	0.07	0.06	0.08	0.29	0.95	0.49	0.61	0.00	1.99	3.03	4.72		0.42	0.64	0.99	1.24
DI-Med				0.06	0.06	0.12	0.22	0.08	0.04	0.09	0.43	0.28	0.08	0.04	0.09	0.49	0.35	0.08	0.06	0.12	0.61	0.08	0.07	0.06	0.08	0.29	0.95	0.63	0.79	0.00	1.99	3.03	4.72		0.15	0.23	0.36	0.44
DI-Shld					0.08	0.08	0.22	0.08	0.04	0.09	0.43	0.28	0.08	0.04	0.09	0.49	0.35	0.08	0.06	0.12	0.61	0.08	0.07	0.06	0.08	0.29	0.95	0.95	1.19	0.00	1.99	3.03	4.72		0.15	0.23	0.35	0.44
Outlet/Lvl Sprdr																																		0.25	0.72	1.09	1.70	2.13

Attachment B - Hydrologic Calculations

Name of Area	P-T16	P-T13	P-T15		P-T1	P-T2	P-T3	P-T4	P-T5		P-T6	P-T7	P-T8	P-T9	P-T10		P-T11	P-T12		P-T14		P-T17	P-T18	P-T19		P-T20		P-FS
Description	Existing	Paved Hwy	Fill Slope		Cut Slope	Base Rd	Cut Slope	Paved Rd	Paved Hwy		Cut Slope	Base Rd	Cut Slope	Paved Rd	Paved Hwy		Cut Slope	Paved Hwy		Paved Hwy		Paved Median	Paved Hwy	Median		Paved Hwy		
Surface Type	Pervious	Impervious	Pervious		Pervious	Pervious	Pervious	Impervious	Impervious		Pervious	Pervious	Pervious	Impervious	Impervious		Pervious	Impervious		Impervious		Impervious	Impervious	Pervious		Impervious		
Drainage Feature				FES						DI-Shld						DI-Shld			DI-Shld		DI-Shld				DI-Med		DI-Shld	Lvl Sprdr
Area (SQFT)	133505	5207	12248		27613	3157	28890	6052	14440		7096	3156	5466	7312	3789		13811	24826		2776		11918	3787	11255		10478		
Area (Acre)	3.06	0.12	0.28		0.63	0.07	0.66	0.14	0.33		0.16	0.07	0.13	0.17	0.09		0.32	0.57		0.06		0.27	0.09	0.26		0.24		

Drainage Area P

Inlet/Outlet Location	A: Areas (Acres) Existing	Existing & Cut/Fill	Only Cut/Fill	Median	Paved	Total	C: Existing Relief	Soil Infiltration	Vegetal Control	Surface Storage	C	Existing & Cut/Fill Relief	Soil Infiltration	Vegetal Control	Surface Storage	C	Only Cut/Fill Relief	Soil Infiltration	Vegetal Control	Surface Storage	C	Median Relief	Soil Infiltration	Vegetal Control	Surface Storage	C	Paved Runoff C	Weighted C	C(f) 100 yr C x 1.25	i (NOAA) Rainfall Intensity 0 year	2 year	10 year	100 year	Q (NOAA) Peak Flow (cfs) 0 year	2 year	10 year	100 year	C(F) 100 year
FES	3.06		0.28		0.12	3.47	0.15	0.08	0.04	0.09	0.36	0.28	0.08	0.04	0.09	0.49	0.35	0.08	0.06	0.12	0.61	0.08	0.07	0.06	0.08	0.29	0.95	0.40	0.50	0.00	1.28	1.94	3.03		1.78	2.69	4.21	5.26
DI-Shld			1.90	0.14	1.36	3.41	0.22	0.08	0.04	0.09	0.43	0.28	0.08	0.04	0.09	0.49	0.35	0.08	0.06	0.12	0.61	0.08	0.07	0.06	0.08	0.29	0.95	0.73	0.92	0.00	1.99	3.03	4.72		4.96	7.56	11.77	14.71
DI-Med				0.26	0.36	0.62	0.22	0.08	0.04	0.09	0.43	0.28	0.08	0.04	0.09	0.49	0.35	0.08	0.06	0.12	0.61	0.08	0.07	0.06	0.08	0.29	0.95	0.67	0.84	0.00	1.99	3.03	4.72		0.83	1.26	1.97	2.46
DI-Shld					0.24	0.24	0.22	0.08	0.04	0.09	0.43	0.28	0.08	0.04	0.09	0.49	0.35	0.08	0.06	0.12	0.61	0.08	0.07	0.06	0.08	0.29	0.95	0.95	1.19	0.00	1.99	3.03	4.72		0.45	0.69	1.08	1.35
Outlet/Lvl Sprdr																																		0.25	8.02	12.21	19.03	23.78

Name of Area	Q-T1	Q-T2		Q-FS
Description	Cut Slope	Paved Hwy		
Surface Type	Pervious	Impervious		
Drainage Feature			DI-Shld	Lvl Sprdr
Area (SQFT)	8876	32796		
Area (Acre)	0.20	0.75		

Drainage Area Q

Inlet/Outlet Location	A: Areas (Acres) Existing	Existing & Cut/Fill	Only Cut/Fill	Median	Paved	Total	C: Existing Relief	Soil Infiltration	Vegetal Control	Surface Storage	C	Existing & Cut/Fill Relief	Soil Infiltration	Vegetal Control	Surface Storage	C	Only Cut/Fill Relief	Soil Infiltration	Vegetal Control	Surface Storage	C	Median Relief	Soil Infiltration	Vegetal Control	Surface Storage	C	Paved Runoff C	Weighted C	C(f) 100 yr C x 1.25	i (NOAA) Rainfall Intensity 0 year	2 year	10 year	100 year	Q (NOAA) Peak Flow (cfs) 0 year	2 year	10 year	100 year	C(F) 100 year
DI-Shld			0.20		0.75	0.96	0.22	0.07	0.04	0.09	0.42	0.28	0.07	0.04	0.09	0.48	0.35	0.08	0.06	0.12	0.61	0.08	0.07	0.06	0.08	0.29	0.95	0.88	1.10	0.00	1.99	3.03	4.72		1.67	2.54	3.96	4.95
Outlet/Lvl Sprdr																																		0.25	1.67	2.54	3.96	4.95

Dist	COUNTY	ROUTE	KILOMETER POST TOTAL PROJECT	SHEET No.	TOTAL SHEETS

REGISTERED CIVIL ENGINEER DATE

PLANS APPROVAL DATE

REGISTERED PROFESSIONAL ENGINEER No. Exp. CIVIL STATE OF CALIFORNIA

THE STATE OF CALIFORNIA OR ITS OFFICERS OR AGENTS SHALL NOT BE RESPONSIBLE FOR THE ACCURACY OR COMPLETENESS OF ELECTRONIC COPIES OF THIS PLAN SHEET.

Caltrans Metric

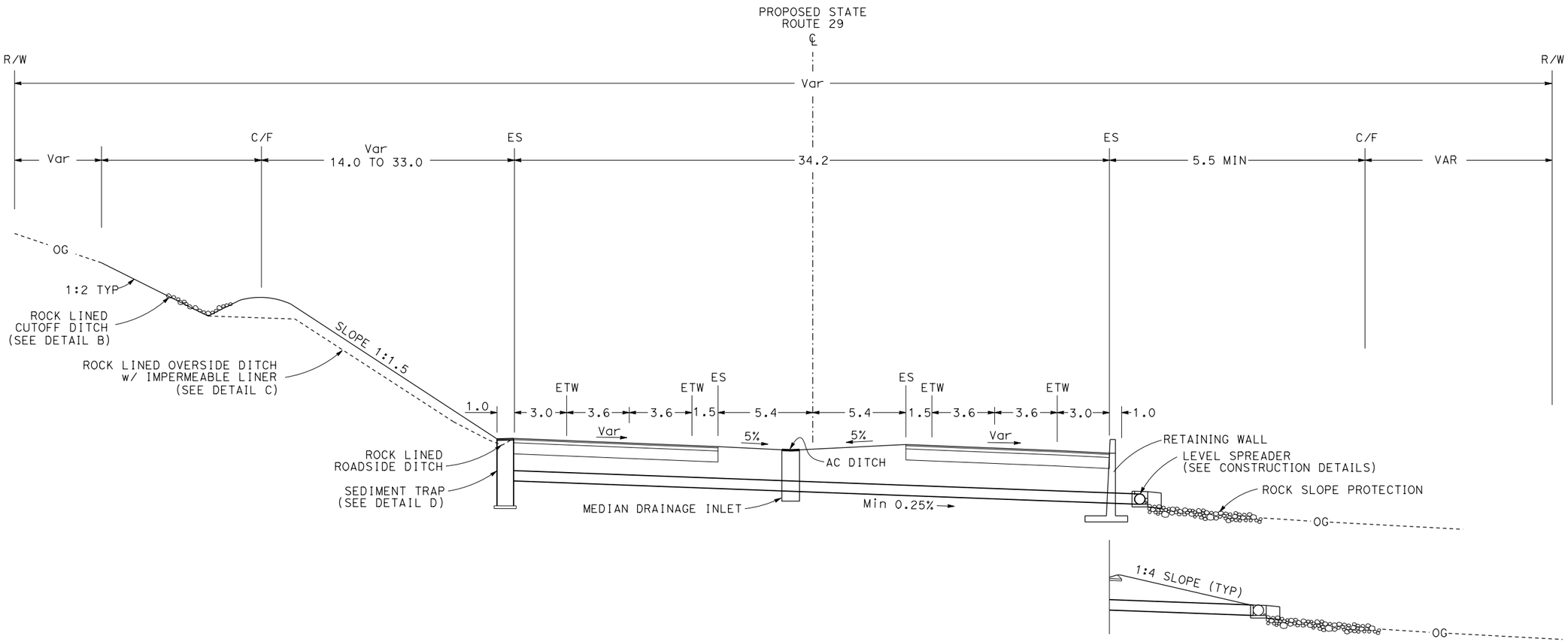

TYPICAL SECTION

DATE 12/08/2015

ALL DIMENSIONS ARE IN METERS UNLESS OTHERWISE SHOWN NO SCALE

ATTACHMENT C
LAK 29 EXPRESSWAY
EA 2981U0

REVISED BY	DATE REVISED

CALCULATED-DESIGNED BY	
CHECKED BY	

FUNCTIONAL SUPERVISOR

STATE OF CALIFORNIA - DEPARTMENT OF TRANSPORTATION

Caltrans

LAST REVISION 00-00-00

DATE PLOTTED => 08-DEC-2015
TIME PLOTTED => 08:44

BORDER LAST REVISED 3/1/2007

RELATIVE BORDER SCALE IS IN MILLIMETERS 0 20 40 60 80

USERNAME => s112894
DGN FILE => Typical Section and Details_Rev-09-18-2015_JReyes_Mod.dgn

CU 00000

EA 000000

Dist	COUNTY	ROUTE	KILOMETER POST TOTAL PROJECT	SHEET No.	TOTAL SHEETS

REGISTERED CIVIL ENGINEER DATE

PLANS APPROVAL DATE

REGISTERED PROFESSIONAL ENGINEER No. Exp. CIVIL STATE OF CALIFORNIA

THE STATE OF CALIFORNIA OR ITS OFFICERS OR AGENTS SHALL NOT BE RESPONSIBLE FOR THE ACCURACY OR COMPLETENESS OF ELECTRONIC COPIES OF THIS PLAN SHEET.

Caltrans Metric

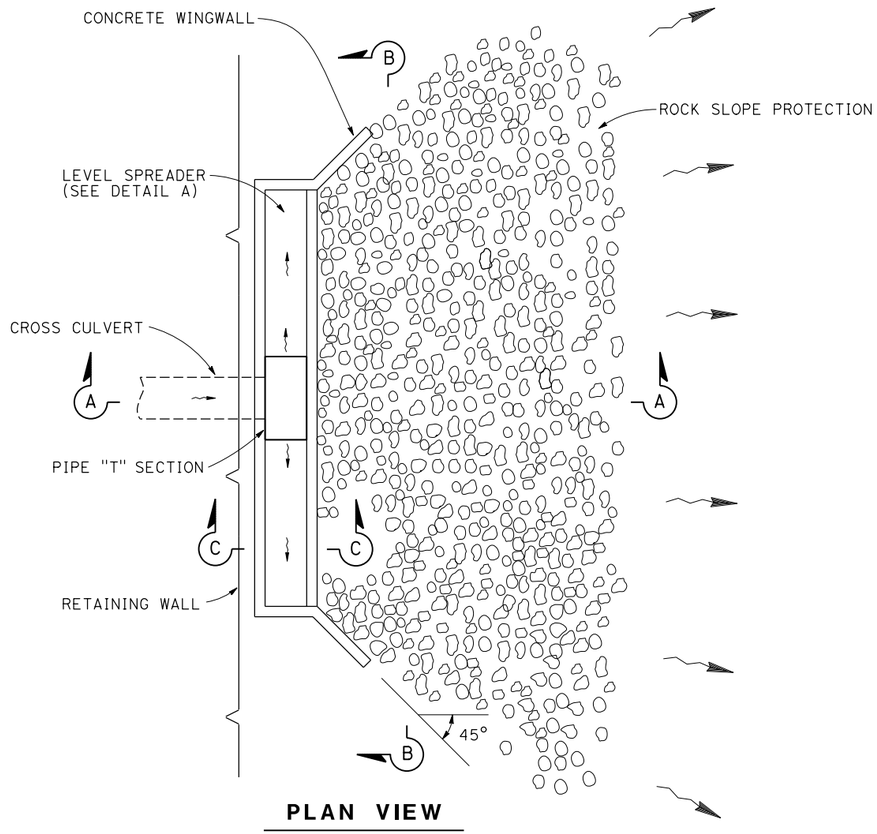

PLAN VIEW

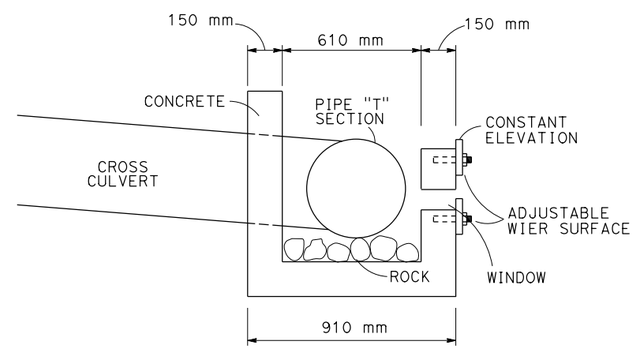

DETAIL A

SECTION C-C

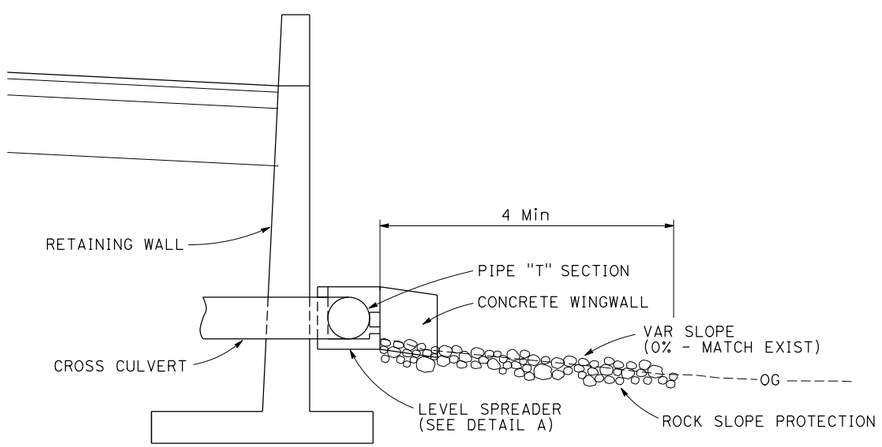

SECTION A-A

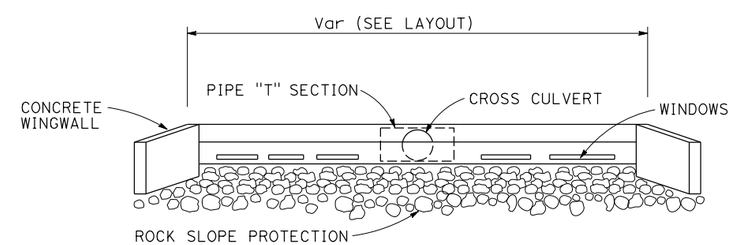

SECTION B-B

LEVEL SPREADER DETAILS

DATE 12/08/2015

ALL DIMENSIONS ARE IN METERS UNLESS OTHERWISE SHOWN NO SCALE

ATTACHEMENT D
LAK 29 EXPRESSWAY
EA 2981U0

REVISED BY	DATE REVISED

CALCULATED-DESIGNED BY

CHECKED BY

FUNCTIONAL SUPERVISOR

STATE OF CALIFORNIA - DEPARTMENT OF TRANSPORTATION

Caltrans

LAST REVISION 00-00-00

DATE PLOTTED => 08-DEC-2015
TIME PLOTTED => 08:43

BORDER LAST REVISED 3/1/2007

RELATIVE BORDER SCALE IS IN MILLIMETERS 0 20 40 60 80

USERNAME => s112894
DGN FILE => Typical Section and Details_Rev-09-18-2015_JReyes_Mod.dgn

CU 00000

EA 000000

Level Spreader Facilities - Outflow Water Depth and Velocity

Watershed Name	Drainage Flow Rate Over Level Spreader Wier				Level Spreader Length	Broad-Crested Weir Equation Q=CLH^3/2								Sharp-Crested Weir Equation Q=CLH^3/2							
						Head C = 3.00 Height of water at wier				Velocity C = 3.00 Velocity of water at wier				Head C = 3.33 Height of water at wier				Velocity C = 3.33 Velocity of water at wier			
	< 1 year	2 year	10 year	100 year		< 1 year	2 year	10 year	100 year	< 1 year	2 year	10 year	100 year	< 1 year	2 year	10 year	100 year	< 1 year	2 year	10 year	100 year
	(cfs)				(ft)	(ft)				(ft/s)				(ft)				(ft/s)			
A	0.25	6.54	9.90	15.48	N/A	N/A	N/A	N/A	N/A	N/A	N/A	N/A	N/A	N/A	N/A	N/A	N/A	N/A	N/A	N/A	N/A
B	0.25	5.66	8.61	13.42	142.23	0.01	0.06	0.07	0.10	0.25	0.71	0.82	0.95	0.01	0.05	0.07	0.09	0.27	0.76	0.88	1.02
C	0.25	4.51	6.87	10.70	32.40	0.02	0.13	0.17	0.23	0.41	1.08	1.24	1.44	0.02	0.12	0.16	0.21	0.44	1.16	1.33	1.54
D	0.25	5.06	7.69	11.99	321.40	0.01	0.06	0.07	0.10	0.28	0.71	0.82	0.95	0.01	0.05	0.07	0.09	0.30	0.76	0.88	1.01
E	0.25	1.65	2.50	3.90																	
F	0.25	6.07	9.24	14.40																	
G	0.25	6.92	10.53	16.41	63.48	0.01	0.11	0.15	0.20	0.33	0.99	1.14	1.32	0.01	0.10	0.14	0.18	0.35	1.07	1.23	1.42
H	0.25	1.22	1.85	2.88	210.00	0.01	0.02	0.02	0.03	0.22	0.37	0.43	0.50	0.01	0.01	0.02	0.03	0.24	0.40	0.46	0.53
I	0.25	1.58	2.40	3.74	269.13	0.01	0.03	0.04	0.05	0.26	0.52	0.60	0.70	0.01	0.03	0.04	0.05	0.27	0.56	0.65	0.75
J	0.25	2.71	4.11	6.41																	
K	0.25	1.79	2.71	4.23	346.23	0.01	0.03	0.05	0.06	0.27	0.56	0.64	0.75	0.01	0.03	0.04	0.06	0.29	0.60	0.69	0.80
L	0.25	1.98	3.01	4.70																	
M	0.25	2.99	4.55	7.07																	
N	0.25	30.26	46.09	72.16	N/A	N/A	N/A	N/A	N/A	N/A	N/A	N/A	N/A	N/A	N/A	N/A	N/A	N/A	N/A	N/A	N/A
O	0.25	0.72	1.09	1.70	112.46	0.01	0.02	0.02	0.03	0.27	0.39	0.44	0.51	0.01	0.02	0.02	0.03	0.29	0.41	0.48	0.55
P	0.25	8.02	12.21	19.03	109.74	0.01	0.08	0.11	0.15	0.27	0.87	1.00	1.16	0.01	0.08	0.10	0.14	0.29	0.93	1.07	1.24
Q	0.25	1.67	2.54	3.96	22.92	0.02	0.08	0.11	0.15	0.46	0.87	1.00	1.16	0.02	0.08	0.10	0.14	0.49	0.93	1.07	1.24

Attachment E

Dist	COUNTY	ROUTE	KILOMETER POST TOTAL PROJECT	SHEET No.	TOTAL SHEETS

REGISTERED CIVIL ENGINEER DATE

PLANS APPROVAL DATE

REGISTERED PROFESSIONAL ENGINEER No. Exp. CIVIL STATE OF CALIFORNIA

THE STATE OF CALIFORNIA OR ITS OFFICERS OR AGENTS SHALL NOT BE RESPONSIBLE FOR THE ACCURACY OR COMPLETENESS OF ELECTRONIC COPIES OF THIS PLAN SHEET.

Caltrans Metric

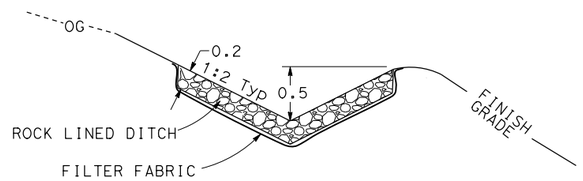

DETAIL B
ROCK LINED CUTOFF DITCH
(TYPICAL)

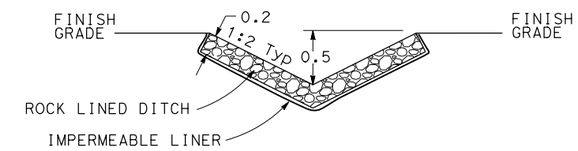

DETAIL C
ROCK LINED OVERSIDE DITCH w/ IMPERMEABLE LINER
(TYPICAL)

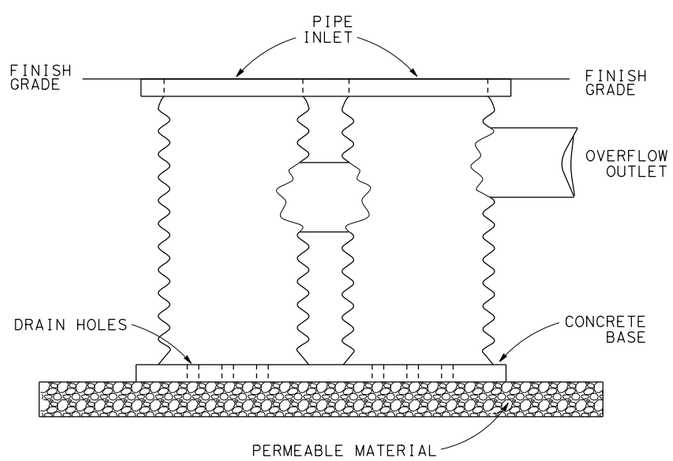

DETAIL D
SEDIMENT TRAP
(TYPICAL)

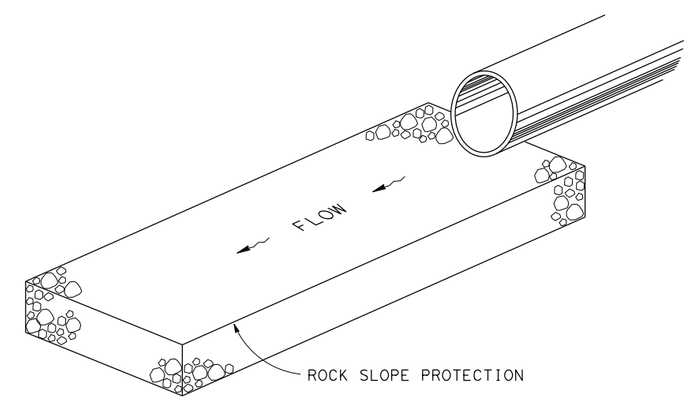

ROCK ENERGY DISSIPATOR AT DRAINAGE OUTLET

ATTACHMENT F
LAK 29 EXPRESSWAY
EA 2981U0

DATE 12/08/2015

ALL DIMENSIONS ARE IN METERS UNLESS OTHERWISE SHOWN NO SCALE

STATE OF CALIFORNIA - DEPARTMENT OF TRANSPORTATION
Caltrans

FUNCTIONAL SUPERVISOR
CALCULATED-DESIGNED BY
CHECKED BY
REVISED BY
DATE REVISED

LAST REVISION 00-00-00
DATE PLOTTED => 09-DEC-2015
TIME PLOTTED => 08:14

01-LAK-29
PM 23.6/31.6
01-2981U0
01 0000 0090

ATTACHMENT S
TRAFFIC ANALYSIS

Lake 29 Improvement Project

Lake County, California
01 – LAK – 29 PM 23.8-31.6
EA 2981U0
EFIS 01 0000 0090

Traffic Analysis

Volume 1 of 2

Volume 2, contains software output calcs and is stored in the project binder for report brevity.

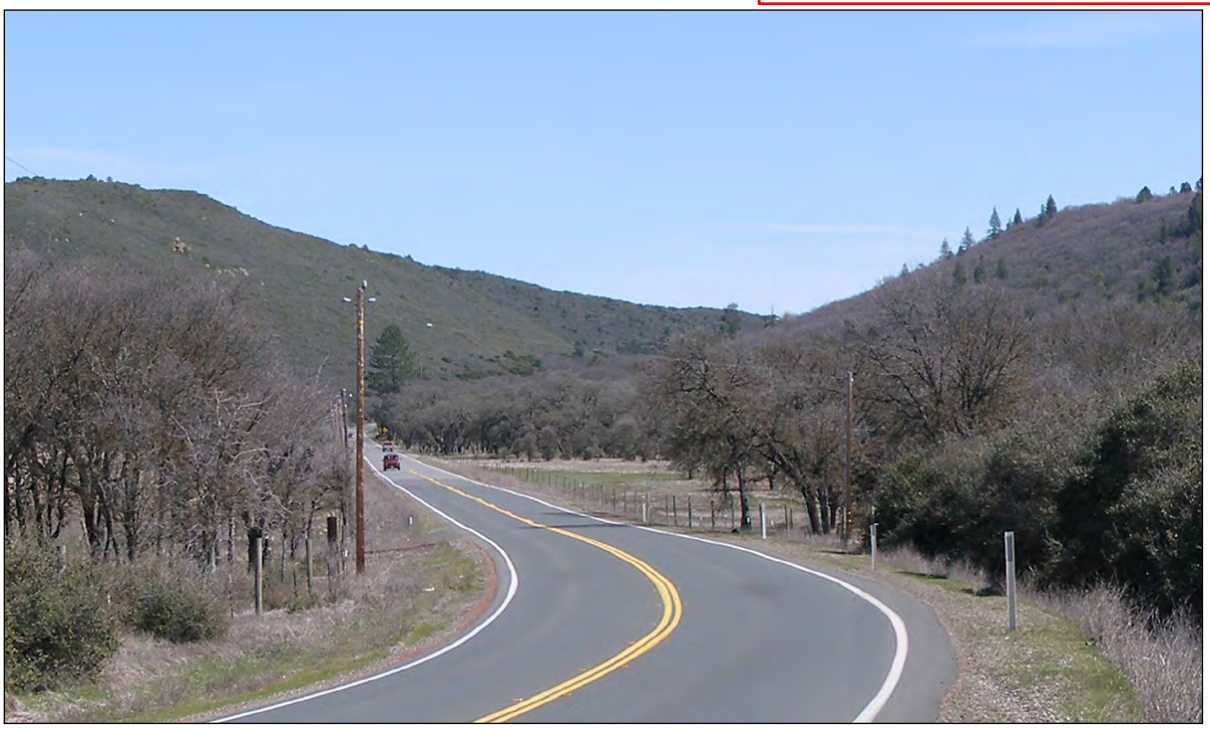

Prepared by the
District 3 Office of Travel Forecasting and Modeling
August 11, 2015
Update October 11, 2016

Blank Page

TABLE OF CONTENTS

Project Purpose ……...4
Project Need ……...4
Traffic Corridor Description ……..5
Traffic Data Discussion ……5
Observations ……5
Model Development ……5
Discussion of Traffic Analysis ……6

LIST OF TABLES

Table 1: Yearly Growth Rate ……..6
Table 2: Lake 29 Traffic Data ……9
Table 3: Performance Measures SR-29 No-Build ……...10
Table 4: Performance Measures SR-29 Build ……11
Table 5: Reduced Segment Delay ……12
Table 6: VMT by Speed Bins No-Build ……13
Table 7: VMT by Speed Bins Build ……14
Table 8: Idling Time ……..15
Table 9 Intersection Performance Measures ……..16
Table 10: Reduced Intersection Delay……17
Table 11: Lake 29 Travel Time Savings ……..18

Appendix A

Table A: SR-29 & SR-281 Intersection Volumes ……..21
Table B: SR-29 & SR-175 Intersection Volumes ……..22
Table C: AM Traffic Counts ……...23
Table D: PM Traffic Counts ……24
Table E: Speed Profile ……25

Project Purpose

The purpose of this project is to:

- Provide a modern transportation facility that will provide adequate capacity to accommodate anticipated traffic growth;
- Facilitate the efficient flow of goods and service through Lake County;
- Provide a facility with the potential for diverting through traffic (including through truck traffic) from north shore SR 20;
- Accommodate local planning goals as set forth in the 2010 Lake County RTP;
- Help achieve the goals of the Caltrans 1998 *Interregional Transportation Strategic Plan* (ITSP); and
- Improve the safety and operation of SR 29.

Project Need

Currently, SR 29 does not meet current design standards or projected traffic volumes, and does not provide safe passing opportunities, emergency parking or clear recovery zones. SR 29 is a Federal Aid Primary Route that with SR 20 and SR 53 (around the south shore of Clear Lake) forms the Lake County portion of the SR 20 Principal Arterial Corridor from US 101 to I-5. In 1988, the Lake County/City APC and Caltrans joined in a cooperative effort to determine appropriate Route Concepts for state highway routes in Lake County and to establish highway development priorities. The Route Concept selected for this Principal Arterial Corridor was a four-lane freeway/expressway with a "C" concept level of service (LOS).[1]

The proposed project is expected to significantly improve overall safety to motorists, providing a modern four-lane facility that meets current design standards. Improvements to the horizontal and vertical alignment, addition of lanes that would create safer passing opportunities, removal of fixed objects, widening of shoulders, and adding a 46-foot median would provide safety benefits to motorists in terms of increased sight distance, enhanced recovery areas, separation of traffic, and minimized exposure to fixed objects.

The Caltrans Office of Traffic Safety performed a collision analysis in the project area between April 1, 2007, and March 31, 2012. During this period, there were 137 collisions, 68 of which resulted in injuries and 7 of which were fatal. The collision rate for the mainline section of SR29 overall is 1.08 collisions per million vehicle miles (MVM) traveled versus the statewide average collision rate of 1.10 per MVM. An analysis conducted for the portion of SR 29 north of the SR29/281/Red Hills Rd intersection (PM 27.9 to 31.6), however, revealed this segment has an actual collision rate of 1.45 collisions for every MVM traveled, which is 1.4 times the statewide average collision rate for similar roadway facilities. The fatal collision rate for this northern segment is 0.085 collisions per MVM 3.5 times greater than the statewide average rate of 0.023 collisions per MVM. As this project would be built to the most current design standards, it is reasonable to assume that the collision rate would be at or below the statewide average, and that the collision rate would be reduced by almost 60 percent.

[1] Level of service (LOS) is a quality measure describing operational conditions within a traffic stream, generally in terms of such service measures as speed and travel time, freedom to maneuver, traffic interruptions, and convenience. LOS is measured on a graduated scale of A to F, in which A is unrestricted free-flow travel and F is gridlocked, impeded movement.

Traffic Corridor Description

The SR 29 is a 2-lane highway between PM 23.6 and PM 31.6 with at-grade intersections at SR 281/Red Hill Rd and SR 175. The intersection of SR 29 and SR 281/Red Hill Rd is signalized, while SR-175 is stop sign controlled for SR 175 only. This corridor has several local roads and driveways along the corridor accessing homes and businesses. There are also some sections of rolling terrain and narrow paved shoulder width less than 1 foot. These factors can cause traffic speeds to be reduced in the corridor. For the remainder of this report SR 29 is referenced in an east/west direction. Southbound SR 29 is labeled as eastbound and northbound SR 29 is labeled as westbound. SR 281/Red Hill Rd and SR 175 are referenced in a north/south direction.

Traffic Data Discussion

Traffic data was collected during the AM (6:00-8:00) and PM (3:00-6:00) peak periods at the SR 29 & SR 281/Red Hill Rd intersection on March 4th and 11th, 2014 to supplement previous count data collected. The recent traffic information collected did not include holiday or special event traffic which could cause traffic congestion. There was no pedestrian traffic observed during the March 2014 counts. Previous count data from 2001 and 2007 were also reviewed for this project. Additional traffic data sources that were reviewed for this analysis were the Caltrans Traffic System Network (TSN) reports, the 2012 Traffic Volumes on California State Highways, and the 2012 Annual Average Daily Truck Traffic (AADTT) on the California State Highway System. The truck percentages used for this analysis were: SR 29 – 4%, SR 175 – 4%, and SR 281 – 2%. These sources were used to develop the 2013 traffic volumes in this report. Signal timing and count data were provided by Caltrans District 1 Traffic Operations unit for microsimulation analysis. Vehicle traveling speeds were collected by radar at two locations in February 2014 to develop a speed profile table for the corridor.

Observations

The northbound and southbound vehicle movements at SR 29 & SR 281/Red Hill Rd intersection do not operate efficiently. There was substantial driver hesitation between the southbound left and the northbound through vehicles.

Another observation was the westbound through movements for the SR 29 at SR 281 intersection do not utilize the two through lanes equally. The lane utilization factor was adjusted in Synchro plus SimTraffic but the simulation did not fully reflect the observed traffic behavior. Trucks use the right lane to allow vehicles to pass and if there are no trucks aggressive drivers use the right lane to bypass traffic. Most of the vehicles use the left lane. Traffic platoons were observed throughout the corridor due to lack of passing opportunities.

Model Development

The forecast volumes were developed for this project from several resources. The 2008 Lake County General Plan, the 2013 Draft Lakeport Area Proposed General Plan, and the Lake County 2030 Regional Blueprint Plan (October 2010) were reviewed. The 2010 Regional Transportation Plan (RTP) states that SR-29 in this area is an unresolved issue and a high priority need for an expressway. The Lake County Planning Office was contacted concerning travel demand models and future growth in the corridor. After discussions with the county and doing our own research, we found that there is not a travel demand model for this area. The growth rates in Table 1 are from District 1 and were developed from the California Air Resources Board traffic growth projections and historical traffic growth data. The growth rates were used to forecast traffic volumes for the years 2021 and 2041 (Table 1).

Table 1

Yearly Growth Rate	
Route	**Percent**
SR 29	2.3%
SR 175	2.0%
SR 281	2.5%
Red Hill Rd	1.5%

The future modal choice for this highway was assumed to be similar to today. Lake County does have plans to increase transit, bike routes, and pedestrian amenities throughout the county but currently Kit's Corner (SR-29 and SR-281) is the primary location where improvements for non-auto modes are being considered. This intersection is a transit transfer station where three bus routes converge which are routes 2, 4, and 4A. Route 2 – follows Red Hills Rd and SR-175, Route 4 – is from Clearlake to Lakeport using SR-29, and Route 4A – is a Soda Bay route using SR-281. This project will provide a benefit to the transfer station by improving accessibility for pedestrians and bicycles and by decreasing total delay compare to the No-Build alternative.

The simulation model was developed using Synchro plus SimTaffic software version 8. The base year 2013 model was calibrated with current volumes and speeds. Twenty model runs were made for each peak hour for the base and future years Build and No-Build. The middle ten model runs were averaged to develop performance measures.

The time periods developed for this report are AM Peak hour, PM Peak hour, and Average Daily Traffic (ADT) (Table 2). The following traffic performance measures were developed for the corridor peak hour volumes, speeds, seconds per vehicle of delay, LOS (Tables 3 and 4), and vehicle miles of travel (VMT) (Tables 6 and 7). Performance measures were also developed for the intersections which include idling time (Tables 8), intersection delay in seconds per vehicle and level-of-service (Table 9), reduced intersection delay (Table 10), and highway segment travel time savings (Table 11).

Discussion of Traffic Analysis

The Build alternative will have less delay per vehicle in the corridor compared to the No-Build alternative for both forecasts years 2021 and 2041. For example eastbound SR-29 has the greatest time savings for both the AM and PM peak hours between SR-281 and SR-175. Year 2041 has 22.6 sec/veh AM savings and 35.2 sec/veh PM savings (Table 5). The LOS improves in all three segments with this project. In 2041 No-Build LOS is projected at E for all segments during the AM and PM peak hours. The 2041 Build year this projected is expected to have LOS of A during the peak hours.

VMT totals are similar for the No-Build and Build alternatives. However the Build alternative will have a larger percentage of VMT in the 61-70 mph range, while the No-Build has a larger percentage of VMT in the slower 51-55 speed range.

Northbound traffic at SR-29 and SR-281/Red Hills Rd will have slightly more delay of 1.2 sec/veh (Table 10) during the 2021 AM peak hour in the Build alternative. This northbound direction will operate at LOS A for year 2021. A protected phase for the southbound lefts would help reduce conflict between the northbound through (Red Hills Rd NB) traffic and southbound left turns (SR-281 SB). Eastbound SR-29 at SR-281 has the highest delay for the 2041 PM No-Build of 42.8 sec/veh and LOS of D. This is due to the large amount of left turns to SR-281. The large volume of left turns will exceed the length of the turn pocket and restrict through traffic from passing through the intersection. Widening the highway to a four lane expressway will facilitate through traffic. The SR-29 eastbound left turn pocket length was increased from 175 feet to 450 feet for vehicle storage in the traffic simulation. This will help to reduce delay for the eastbound through traffic.

SR-175 northbound will have a LOS of D and delay of 25.2 sec/veh for the 2041 PM No-Build alternative. Northbound left turn movements from SR 175 to westbound SR 29 will be severely affected in the forecast No-Build alternative. Eastbound and westbound traffic through movements will make it difficult to complete a left turn. For the Build alternative a left turn acceleration lane of 947 feet was included in the simulation to facilitate left turns merging into westbound high speed traffic.

The traffic diagrams, count data, and speed profile are included in Appendix A. Included in Appendix B through G are the arterial delay calculations, idling calculations, intersection delay calculations, SimTraffic reports, 2010 Highway Capacity Software (HCS) Reports, and corridor travel times.

Blank Page

Table 2

Lake 29 Traffic Data

Route	Postmile	2013 ADT	2021 ADT	2041 ADT
29	23.8-27.89	9,200	10,820	14,870
29	27.89-31.05	9,510	11,180	15,370
29	31.05-31.6	10,020	11,780	16,190
175	8.19	770	890	1,190
281	17	6,360	7,600	10,700

Route	Postmile	2013 PM PK HR	2021 PM PK HR	2041 PM PK HR
29	23.8-27.89	910	1,070	1,471
29	27.89-31.05	992	1,166	1,603
29	31.05-31.6	1,012	1,190	1,636
175	8.19	92	106	142
281	17	605	723	1,018
Red Hill	N/A	91	102	129

Route	Postmile	2013 AM PK HR	2021 AM PK HR	2041 AM PK HR
29	23.8-27.89	644	758	1,041
29	27.89-31.05	761	895	1,229
29	31.05-31.6	802	943	1,296
175	8.19	77	89	119
281	17	508	608	856
Red Hill	N/A	55	61	77

Truck Percents	
Route	**Percent**
29	6.5%
175	25.0%
281	4.4%

ADT = Average Daily Traffic

PK HR = Peak Hour

July 30, 2015

Table 3

Performance Measures SR-29 No-Build

Existing 2013

Post Mile	23.8-27.89				27.89-31.05				31.05-31.6			
Description	Diener to SR281				SR281 to SR175				SR175 to Proj End			
	Vol	Speed[1] (mph)	Delay[1] (sec/veh)	LOS[2]	Vol	Speed[1] (mph)	Delay[1] (sec/veh)	LOS[2]	Vol	Speed[1] (mph)	Delay[1] (sec/veh)	LOS[2]
AM Peak Hour Eastbound	318	53	19.1	D	245	51	39.5	E	245	54	2.0	D
AM Peak Hour Westbound	346	51	55.3		552	51	22.9		592	52	3.2	
PM Peak Hour Eastbound	403	52	22.0	D	522	49	34.9	E	567	51	3.8	D
PM Peak Hour Westbound	415	51	43.7		409	52	21.7		476	52	2.7	

No Build 2021

Post Mile	23.8-27.89				27.89-31.05				31.05-31.6			
Description	Diener to SR281				SR281 to SR175				SR175 to Proj End			
	Vol	Speed[1] (mph)	Delay[1] (sec/veh)	LOS[2]	Vol	Speed[1] (mph)	Delay[1] (sec/veh)	LOS[2]	Vol	Speed[1] (mph)	Delay[1] (sec/veh)	LOS[2]
AM Peak Hour Eastbound	374	53	20.6	D	287	51	41.1	E	292	54	2.3	D
AM Peak Hour Westbound	414	51	58.1		661	51	25.9		706	51	5.6	
PM Peak Hour Eastbound	481	52	23.4	E	621	49	39.7	E	682	50	4.5	D
PM Peak Hour Westbound	491	50	49.5		477	51	24.6		551	52	3.1	

No Build 2041

Post Mile	23.8-27.89				27.89-31.05				31.05-31.6			
Description	Diener to SR281				SR281 to SR175				SR175 to Proj End			
	Vol	Speed[1] (mph)	Delay[1] (sec/veh)	LOS[2]	Vol	Speed[1] (mph)	Delay[1] (sec/veh)	LOS[2]	Vol	Speed[1] (mph)	Delay[1] (sec/veh)	LOS[2]
AM Peak Hour Eastbound	528	52	23.0	E	394	50	45.3	E	394	53	2.7	E
AM Peak Hour Westbound	564	50	67.1		906	49	34.1		965	50	5.0	
PM Peak Hour Eastbound	638	52	23.9	E	839	47	53.7	E	857	49	5.4	E
PM Peak Hour Westbound	671	50	57.6		667	50	29.4		770	51	3.7	

[1]Speeds and delay from Synchro plus SimTraffic v8.

[2]LOS - Level of Service A through F from 2010 Highway Capacity Software.

August 11, 2015

Table 4

Performance Measures SR-29 Build

Build 2021

Post Mile	23.8-27.89				27.89-31.05				31.05-31.6			
Description	Diener to SR281				SR281 to SR175				SR175 to Proj End			
	Vol	Speed[1] (mph)	Delay[1] (sec/veh)	LOS[2]	Vol	Speed[1] (mph)	Delay[1] (sec/veh)	LOS[2]	Vol	Speed[1] (mph)	Delay[1] (sec/veh)	LOS[2]
AM Peak Hour Eastbound	371	64	11.4	A	283	62	22.7	A	285	65	1.1	A
AM Peak Hour Westbound	408	61	45.7	A	663	62	13.5	A	711	61	2.5	A
PM Peak Hour Eastbound	470	63	12.9	A	611	61	16.6	A	663	63	1.9	A
PM Peak Hour Westbound	488	61	33.1	A	479	63	12.9	A	555	62	2.0	A

Build 2041

Post Mile	23.8-27.89				27.89-31.05				31.05-31.6			
Description	Diener to SR281				SR281 to SR175				SR175 to Proj End			
	Vol	Speed[1] (mph)	Delay[1] (sec/veh)	LOS[2]	Vol	Speed[1] (mph)	Delay[1] (sec/veh)	LOS[2]	Vol	Speed[1] (mph)	Delay[1] (sec/veh)	LOS[2]
AM Peak Hour Eastbound	511	63	13.2	A	389	62	22.7	A	392	59	1.5	A
AM Peak Hour Westbound	559	61	50.8	A	908	62	15.8	A	964	59	4.0	A
PM Peak Hour Eastbound	647	62	16.8	A	842	60	18.5	A	926	62	2.5	A
PM Peak Hour Westbound	673	60	41.3	A	656	61	15.9	A	761	60	3.1	A

[1]Speeds and delay from Synchro plus SimTraffic v8.

[2]LOS - Level of Service A through F from 2010 Highway Capacity Software.

July 30, 2015

Table 5

Reduced Segment Delay

Compare No-Build 2021 to Build 2021

Post Mile	23.8-27.89	27.89-31.05	31.05-31.6
Description	Diener to SR281	SR281 to SR175	SR175 to Proj End
Decrease in Delay	Delay (sec/veh)	Delay (sec/veh)	Delay (sec/veh)
AM Peak Hour Eastbound	9.2	18.4	1.2
AM Peak Hour Westbound	12.4	12.4	3.1
PM Peak Hour Eastbound	10.5	23.1	2.6
PM Peak Hour Westbound	16.4	11.7	1.1

Compare No-Build 2041 to Build 2041

Post Mile	23.8-27.89	27.89-31.05	31.05-31.6
Description	Diener to SR281	SR281 to SR175	SR175 to Proj End
Decrease in Delay	Delay (sec/veh)	Delay (sec/veh)	Delay (sec/veh)
AM Peak Hour Eastbound	9.8	22.6	1.2
AM Peak Hour Westbound	16.3	18.3	1.0
PM Peak Hour Eastbound	7.1	35.2	2.9
PM Peak Hour Westbound	16.3	13.5	0.6

August 11, 2015

Table 6

VMT by Speed Bins No-Build

			2013 AM NoBuild		2013 PM NoBuild		2021 AM NoBuild		2021 PM NoBuild		2041 AM NoBuild		2041 PM NoBuild	
Speed Bin (mph)			VMT (veh - miles)	VMT (%)	VMT (veh - miles)	VMT (%)	VMT (veh - miles)	VMT (%)	VMT (veh - miles)	VMT (%)	VMT (veh - miles)	VMT (%)	VMT (veh - miles)	VMT (%)
0	-	5	0	0%	0	0%	0	0%	0	0%	0	0%	0	0%
6	-	10	0	0%	0	0%	0	0%	0	0%	0	0%	73	1%
11	-	15	36	1%	46	1%	43	1%	54	1%	60	1%	133	1%
16	-	20	112	2%	83	1%	134	2%	96	1%	183	2%	0	0%
21	-	25	0	0%	0	0%	75	1%	0	0%	102	1%	74	1%
26	-	30	62	1%	46	1%	0	0%	53	1%	0	0%	0	0%
31	-	35	0	0%	0	0%	0	0%	0	0%	0	0%	183	2%
36	-	40	64	1%	0	0%	0	0%	0	0%	107	1%	0	0%
41	-	45	0	0%	82	1%	76	1%	233	3%	193	2%	131	1%
46	-	50	224	4%	297	4%	269	4%	115	1%	576	6%	593	5%
51	-	55	4,819	86%	5,718	83%	5,730	86%	7,007	87%	7,482	81%	9,235	84%
56	-	60	312	6%	596	9%	371	6%	474	6%	521	6%	630	6%
61	-	65	0	0%	0	0%	0	0%	0	0%	0	0%	0	0%
66	-	70	0	0%	0	0%	0	0%	0	0%	0	0%	0	0%
71	-	100	0	0%	0	0%	0	0%	0	0%	0	0%	0	0%
Total			5,629		6,867		6,698		8,032		9,224		11,052	

VMT - Vehicle miles traveled

July 30, 2015

Table 7

VMT by Speed Bins Build

			2021 AM Build		2021 PM Build		2041 AM Build		2041 PM Build	
Speed Bin (mph)			VMT (veh - miles)	VMT (%)	VMT (veh - miles)	VMT (%)	VMT (veh - miles)	VMT (%)	VMT (veh - miles)	VMT (%)
0	-	5	0	0%	0	0%	0	0%	0	0%
6	-	10	0	0%	0	0%	0	0%	0	0%
11	-	15	0	0%	0	0%	0	0%	0	0%
16	-	20	0	0%	0	0%	186	2%	136	1%
21	-	25	177	3%	96	1%	58	1%	0	0%
26	-	30	0	0%	54	1%	0	0%	73	1%
31	-	35	75	1%	53	1%	103	1%	76	1%
36	-	40	0	0%	0	0%	0	0%	0	0%
41	-	45	0	0%	0	0%	0	0%	0	0%
46	-	50	75	1%	95	1%	103	1%	131	1%
51	-	55	0	0%	0	0%	210	2%	0	0%
56	-	60	296	4%	102	1%	370	4%	494	4%
61	-	65	1,613	24%	3,301	41%	4,548	50%	8,313	75%
66	-	70	4,418	66%	4,336	54%	3,594	39%	1,883	17%
71	-	100	0	0%	0	0%	0	0%	0	0%
Total			6,653		8,038		9,171		11,106	

VMT - Vehicle miles traveled

July 30, 2015

Table 8

Idling Time

SR-29 & SR-281/Red Hills

Average Idling Time				
Alternative	**min/vehicle**			
	EB	WB	NB	SB
2013 AM NoBuild	0.31	0.29	0.06	0.06
2013 PM NoBuild	0.31	0.29	0.17	0.13
2021 AM NoBuild	0.31	0.29	0.08	0.09
2021 PM NoBuild	0.38	0.36	0.22	0.17
2041 AM NoBuild	0.33	0.34	0.16	0.15
2041 PM NoBuild	0.52	0.41	0.42	0.30
2021 AM Build	0.19	0.24	0.09	0.08
2021 PM Build	0.20	0.24	0.21	0.14
2041 AM Build	0.19	0.26	0.14	0.13
2041 PM Build	0.23	0.30	0.33	0.21

SR-29 & SR-175

Average Idling Time			
Alternative	**min/vehicle**		
	EB	WB	NB
2013 AM NoBuild	0.00	0.00	0.11
2013 PM NoBuild	0.00	0.00	0.12
2021 AM NoBuild	0.00	0.00	0.15
2021 PM NoBuild	0.00	0.00	0.20
2041 AM NoBuild	0.00	0.00	0.33
2041 PM NoBuild	0.00	0.00	0.39
2021 AM Build	0.00	0.00	0.07
2021 PM Build	0.00	0.00	0.10
2041 AM Build	0.00	0.00	0.09
2041 PM Build	0.00	0.00	0.19

Idling Time - stopped delay from Synchro plus SimTraffic 8
July 30, 2015

Table 9

Intersection Performance Measures

SR-29 & SR-281/Red Hill Rd

Alternative	Delay[1] per Vehicle (sec) / LOS[2]							
	EB		WB		NB		SB	
	sec	LOS	sec	LOS	sec	LOS	sec	LOS
2013 AM NoBuild	24.6	C	24.8	C	5.1	A	6.6	A
2013 PM NoBuild	25.8	C	24.1	C	12.8	B	10.4	B
2021 AM NoBuild	24.8	C	25.4	C	6.1	A	8.5	A
2021 PM NoBuild	31.2	C	28.9	C	16.1	B	13.5	B
2041 AM NoBuild	26.7	C	29.5	C	11.7	B	13.9	B
2041 PM NoBuild	42.8	D	34.0	C	29.0	C	22.2	C
2021 AM Build	15.0	B	21.4	B	7.3	A	7.9	A
2021 PM Build	15.6	B	19.8	B	15.6	A	11.0	B
2041 AM Build	15.0	B	24.0	C	10.4	B	11.4	B
2041 PM Build	18.2	B	24.6	C	22.9	C	15.8	B

SR-29 & SR-175

Alternative	**Delay[1] per Vehicle (sec) / LOS[2]**					
	EB		WB		NB	
	sec	LOS	sec	LOS	sec	LOS
2013 AM NoBuild	0.9	A	3.3	A	7.5	A
2013 PM NoBuild	1.9	A	2.5	A	8.4	A
2021 AM NoBuild	1.1	A	3.8	A	10.2	B
2021 PM NoBuild	2.2	A	3.1	A	13.2	B
2041 AM NoBuild	1.2	A	5.6	A	22.1	C
2041 PM NoBuild	2.7	A	3.9	A	25.2	D
2021 AM Build	0.5	A	1.3	A	5.3	A
2021 PM Build	0.8	A	1.0	A	6.9	A
2041 AM Build	0.5	A	1.7	A	6.9	A
2041 PM Build	1.0	A	1.5	A	12.7	B

[1]Delay from Synchro plus SimTraffic v8.

[2]LOS - Level of Service A through F from 2010 HCM Exhibits 18-4 and 19-1.

July 30, 2015

Table 10

Reduced Intersection Delay

SR-29 & SR-281/Red Hill Rd

Compare No-Build - Build

Alternative	Decrease in Delay per Vehicle			
	EB	WB	NB	SB
	sec	sec	sec	sec
2021 AM	9.7	4.0	-1.2	0.7
2021 PM	15.6	9.1	0.5	2.4
2041 AM	11.7	5.5	1.2	2.5
2041 PM	24.6	9.4	6.1	6.4

SR-29 & SR-175

Compare No-Build to Build

Alternative	Decrease in Delay per Vehicle		
	EB	WB	NB
	sec	sec	sec
2021 AM	0.6	2.5	4.9
2021 PM	1.4	2.1	6.3
2041 AM	0.7	3.9	15.2
2041 PM	1.7	2.4	12.5

January 12, 2016

Table 11

Lake 29 Travel Time Savings

Compare No-Build 2021 to Build 2021

Post Mile	23.8-27.89	27.89-31.05	31.05-31.6	Total
Description	Diener to SR281	SR281 to SR175	SR175 to Proj End	
	minutes	minutes	minutes	minutes
AM Peak Hour Eastbound	0.8	0.8	0.1	1.7
AM Peak Hour Westbound	0.7	0.9	0.1	1.7
PM Peak Hour Eastbound	0.9	0.8	0.1	1.9
PM Peak Hour Westbound	0.7	0.9	0.1	1.7

Compare No-Build 2041 to Build 2041

Post Mile	23.8-27.89	27.89-31.05	31.05-31.6	Total
Description	Diener to SR281	SR281 to SR175	SR175 to Proj End	
	minutes	minutes	minutes	minutes
AM Peak Hour Eastbound	0.8	0.8	0.1	1.7
AM Peak Hour Westbound	0.8	0.9	0.1	1.8
PM Peak Hour Eastbound	1.2	0.8	0.1	2.2
PM Peak Hour Westbound	0.7	0.9	0.1	1.7

October 28, 2015

Appendix A

Blank Page

Table-A

SR-29 & SR-281/Red Hill Rd Intersection Volumes

Year 2013 AM PK HR

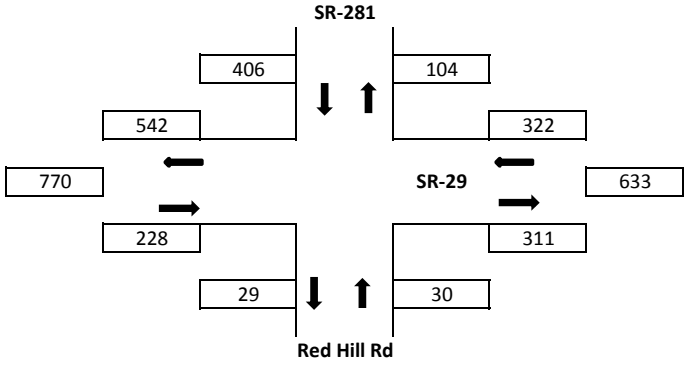

Year 2013 PM PK HR

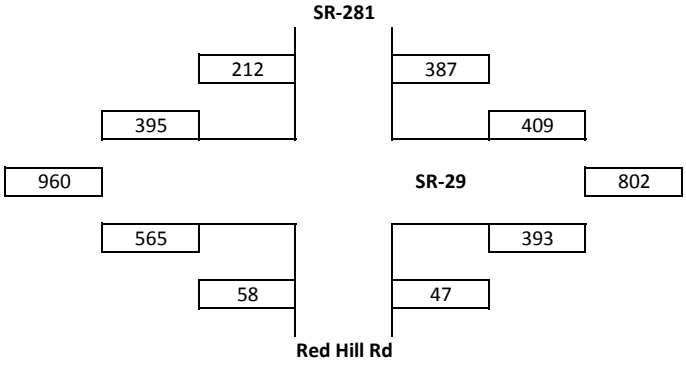

Year 2021 AM PK Hr

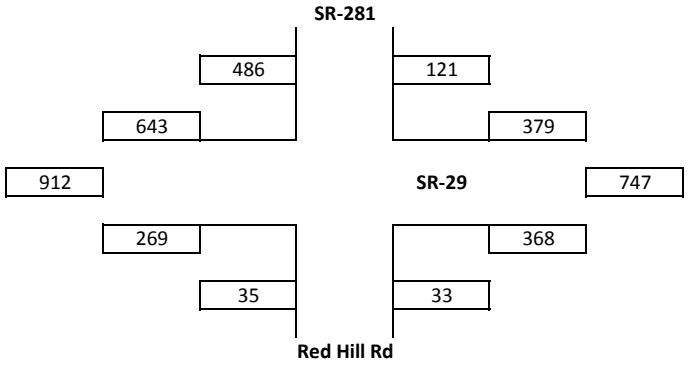

Year 2021 PM PK Hr

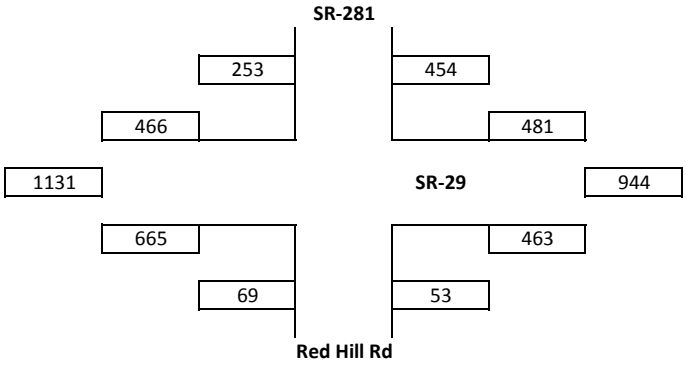

Year 2041 AM PK HR

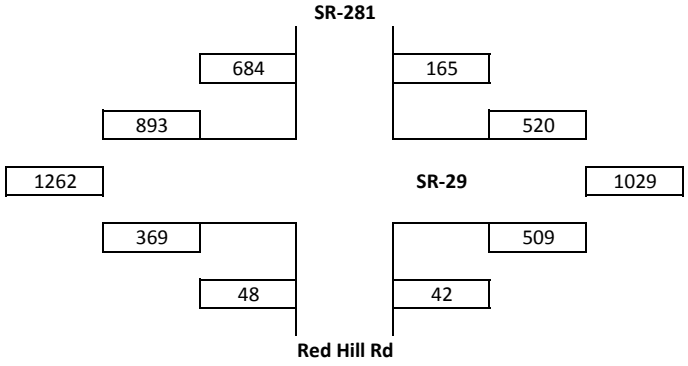

Year 2041 PM PK Hr

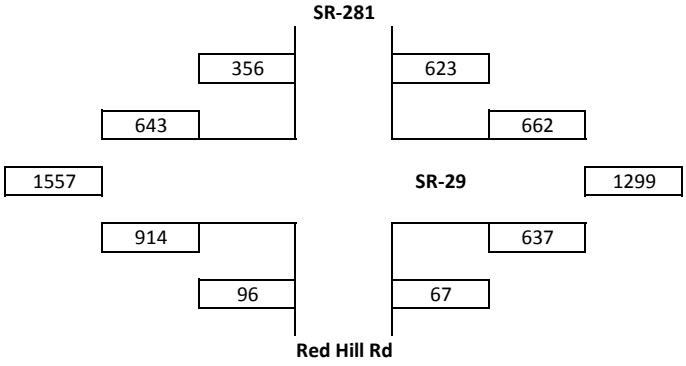

Table-B

SR-29 & SR-175 Intersection Volumes

Year 2013 AM PK HR

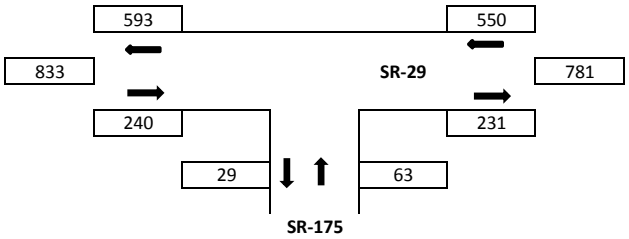

Year 2013 PM PK HR

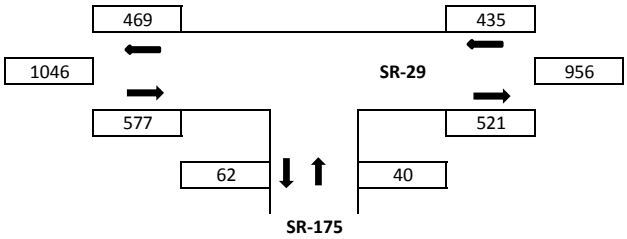

Year 2021 AM PK HR

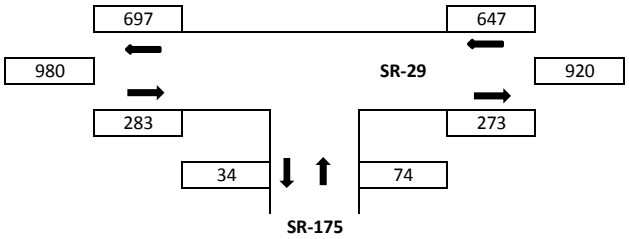

Year 2021 PM PK HR

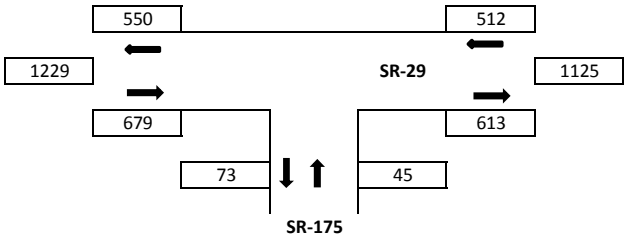

Year 2041 AM PK HR

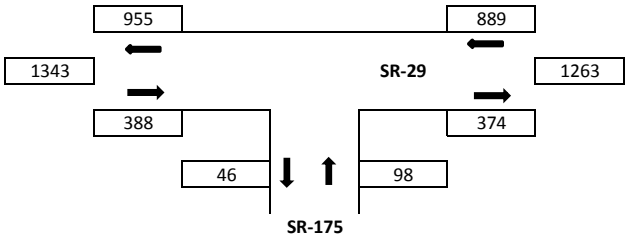

Year 2041 PM PK HR

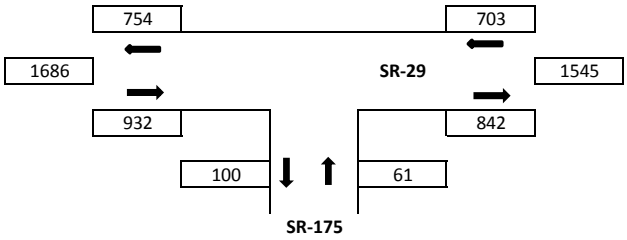

Table-C

AM Trafffic Counts

Start Date: 3/11/2014 Day: Tuesday Weather: Clear Observer: CSmith

Start Time 6:00 AM

	SR 281					SR-29					Red Hills Rd					SR-29					Grand Total
	From North (S/B)					From East (W/B)					From South (N/B)					From West (E/B)					
Start Time	Right	Thru	Left	Total		Right	Thru	Left	Total		Right	Thru	Left	Total		Right	Thru	Left	Total		
6:00 AM	21	6	19	46		2	13	1	16		0	1	0	1		1	14	0	15		
6:15 AM	19	3	10	32		3	20	0	23		1	2	0	3		0	22	1	23		
6:30 AM	22	1	22	45		3	27	3	33		2	2	1	5		2	44	6	52		
6:45 AM	29	1	25	55	178	7	31	5	43	115	3	1	0	4	13	6	49	5	60	150	456
7:00 AM	46	1	24	71	203	6	37	1	44	143	1	1	2	4	16	1	44	6	51	186	548
7:15 AM	57	2	29	88	259	14	68	0	82	202	4	4	2	10	23	1	37	6	44	207	691
7:30 AM	108	3	52	163	377	9	84	3	96	265	5	5	0	10	28	1	46	9	56	211	881
7:45 AM	72	7	33	112	434	7	69	1	77	299	1	3	2	6	30	1	42	16	59	210	973
8:00 AM	47	5	29	81	444	6	39	0	45	300	2	1	1	4	30	1	37	19	57	216	990

	SR 281					SR-29					Red Hills Rd					SR-29				
	From North (S/B)					From East (W/B)					From South (N/B)					From West (E/B)				
Time	Right	Thru	Left	Total		Right	Thru	Left	Total		Right	Thru	Left	Total		Right	Thru	Left	Total	
7:15-8:15	284	17	143	444		36	260	4	300		12	13	5	30		4	162	50	216	
Perc	64%	4%	32%	100%		12%	87%	1%	100%		40%	43%	17%	100%		2%	75%	23%	100%	

Table-D

PM Trafffic counts

Start Date: 3/4/2014 Day: Tuesday Weather: Cloudy Observer: CSmith

Start Time 3:00 PM

	SR-281					SR-29					Red Hills Rd					SR-29						Grand
	From North (S/B)					From East (W/B)					From South (N/B)					From West (E/B)						Total
Start Time	Right	Thru	Left	Total		Right	Thru	Left	Total		Right	Thru	Left	Total		Right	Thru	Left	Total			
3:00 PM	22	4	20	46		30	56	3	89		2	7	0	9		1	47	31	79			
3:15 PM	21	5	10	36		30	51	2	83		3	7	0	10		3	68	38	109			
3:30 PM	16	6	18	40		25	51	5	81		3	9	6	18		0	76	34	110			
3:45 PM	29	6	9	44	166	25	60	2	87	340	7	12	12	31	68	1	54	38	93	391		965
4:00 PM	18	7	9	34	154	20	48	5	73	324	0	3	1	4	63	2	54	35	91	403		944
4:15 PM	16	3	3	22	140	31	57	2	90	331	1	5	2	8	61	2	66	41	109	403		935
4:30 PM	12	5	13	30	130	26	60	0	86	336	8	3	11	22	65	1	53	32	86	379		910
4:45 PM	24	4	11	39	125	35	45	4	84	333	1	4	1	6	40	5	66	41	112	398		896
5:00 PM	17	3	13	33	124	26	56	6	88	348	1	3	1	5	41	5	46	44	95	402		915
5:15 PM	25	5	8	38	140	28	49	8	85	343	3	8	0	11	44	2	71	67	140	433		960
5:30 PM	12	1	12	25	135	22	49	1	72	329	0	5	0	5	27	1	60	57	118	465		956
5:45 PM	14	4	12	30	126	30	35	1	66	311	0	3	3	6	27	1	44	56	101	454		918

	SR-281					**SR-29**					**Red Hills Rd**					**SR-29**			
	From North (S/B)					**From East (W/B)**					**From South (N/B)**					**From West (E/B)**			
Time	**Right**	**Thru**	**Left**	**Total**		**Right**	**Thru**	**Left**	**Total**		**Right**	**Thru**	**Left**	**Total**		**Right**	**Thru**	**Left**	**Total**
4:15 - 5:15	78	17	45	140		115	210	18	343		13	18	13	44		13	236	184	433
Perc	56%	12%	32%	100%		34%	61%	5%	100%		30%	41%	30%	100%		3%	55%	42%	100%

Table-E

Speed Profile For Lake 29 Corrridor

Speed	PM 30.2		PM 29.0			
mph	EB	WB	EB	WB	All	
80					0	0
79					0	0
78					0	0
77					0	0
76					0	0
75					0	0
74					0	0
73			1		1	73
72					0	0
71			1		1	71
70		1			1	70
69					0	0
68					0	0
67			2		2	134
66	3		6	1	10	660
65	1	1	3	2	7	455
64	1	2	2	3	8	512
63	4	2	10	4	20	1260
62	4	5	9	4	22	1364
61	2	4	12	7	25	1525
60	10	11	15	11	47	2820
59	13	14	17	12	56	3304
58	19	14	19	9	61	3538
57	17	17	20	22	76	4332
56	11	16	13	19	59	3304
55	11	20	10	11	52	2860
54	4	13	7	12	36	1944
53	8	15	5	9	37	1961
52	2	8	6	3	19	988
51	2	5	2	3	12	612
50	1	3			4	200
49	1	2		2	5	245
48	1	2		1	4	192
47		1			1	47
46		1	1	1	3	138
45					0	0
44	1		1		2	88
43		2			2	86
42					0	0
41				1	1	41
40					0	0
39					0	0
38					0	0
37					0	0
36					0	0
35					0	0
34					0	0
33					0	0
32					0	0
31					0	0
30					0	0
29					0	0
28					0	0
27					0	0
26					0	0
25					0	0
Total	116	159	162	137	574	32824

10 groups, 57/58

57.18467 average speed
= 57 ave mph