Lake29 IMPROVEMENT PROJECT

STATE ROUTE 29 TYPICAL SECTIONS

ALTERNATIVE C1 EXPRESSWAY TYPICAL SECTION

PRELIMINARY

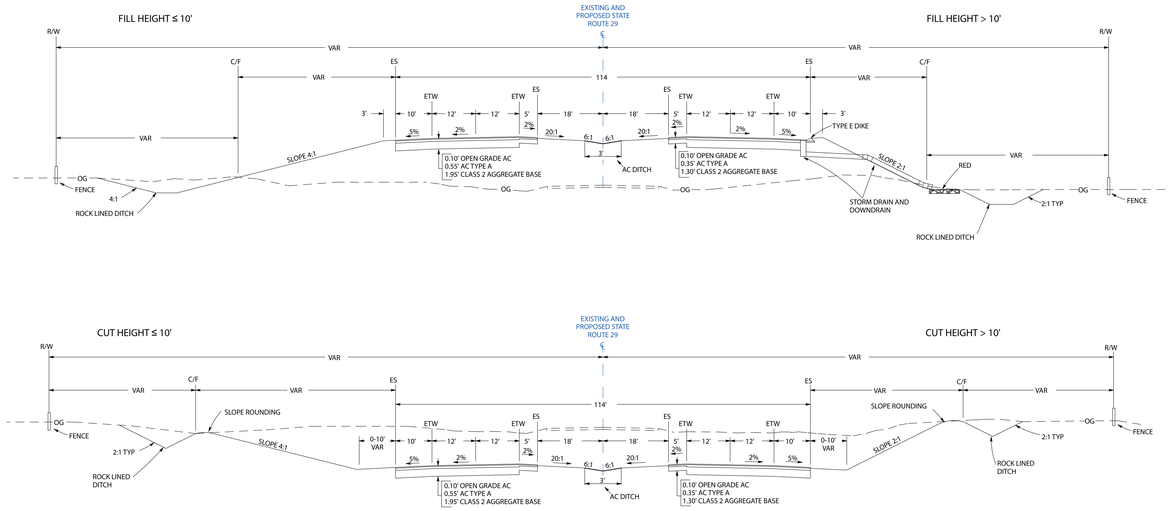

Alternative C1 alignment maintains the existing highway centerline.

NO SCALE

ALTERNATIVE C2 EXPRESSWAY TYPICAL SECTION

PRELIMINARY

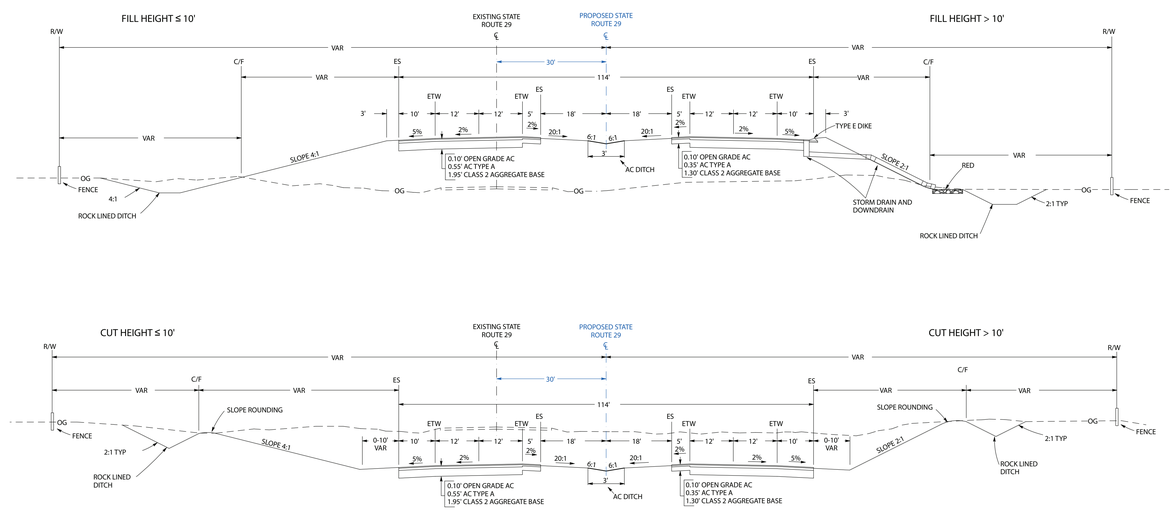

Alternative C2 alignment is shifted 30 feet to the north of the existing highway centerline.

NO SCALE

LEGEND

— –	EXISTING ROUTE 29 & ORIGINAL GROUND
——	PROPOSED ROUTE 29
AC	ASPHALT CONCRETE
C/F	CUT/FILL CATCH POINT
℄	CENTERLINE
ES	EDGE OF SHOULDER
ETW	EDGE OF TRAVELED WAY
OG	ORIGINAL GROUND
RED	ROCK ENERGY DISSIPATOR
R/W	RIGHT OF WAY
TYP	TYPICAL
VAR	VARIES

NOTE: ALL DIMENSIONS ARE IN FEET UNLESS OTHERWISE SHOWN.

ALTERNATIVE C3 EXPRESSWAY TYPICAL SECTION

PRELIMINARY

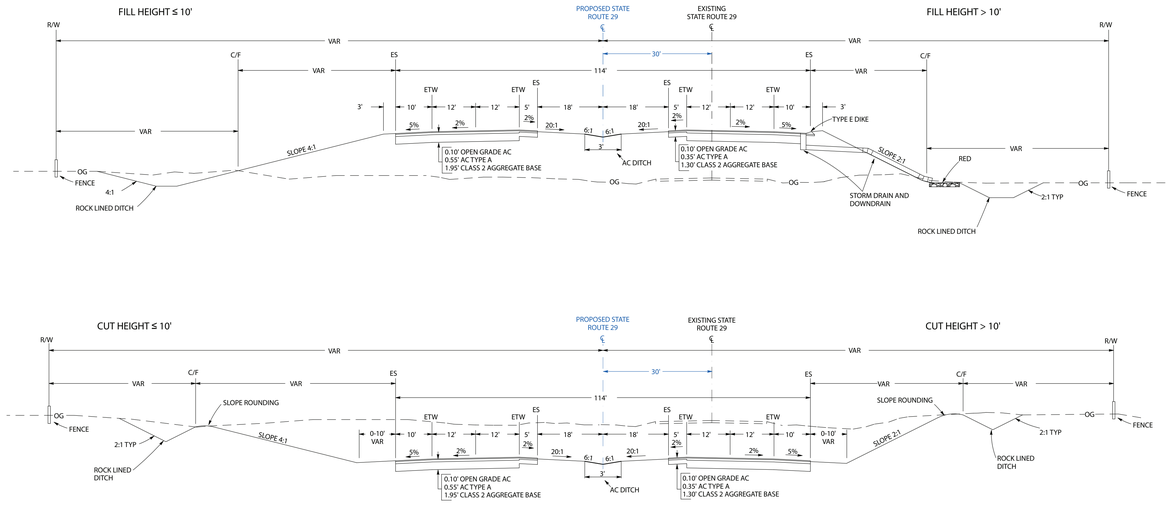

Alternative C3 alignment is shifted 30 feet south of the existing highway centerline.

NO SCALE

ALTERNATIVE D EXPRESSWAY TYPICAL SECTION

PRELIMINARY

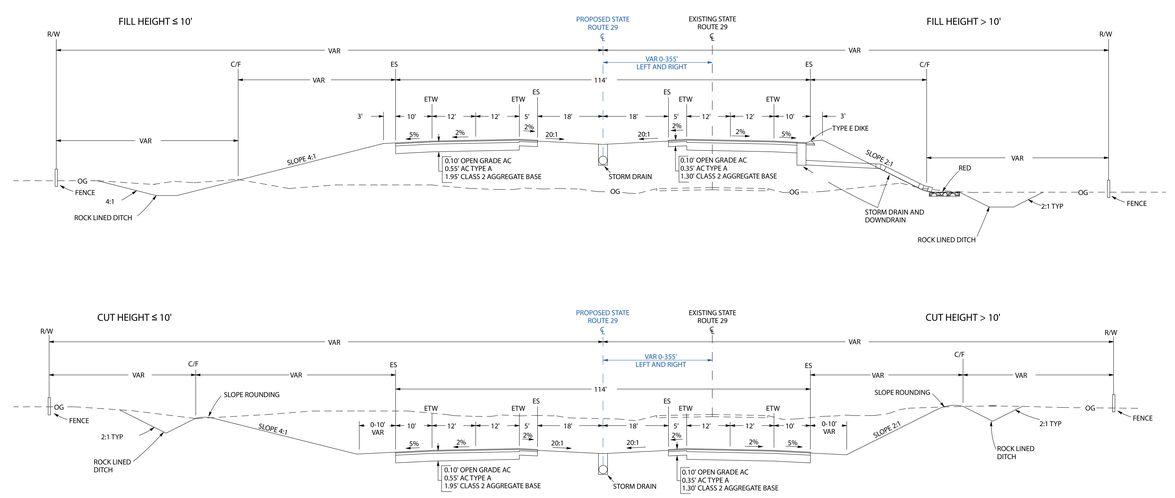

Alternative D alignment is designed to avoid sensitive environmental resources and further minimize earthwork.

NO SCALE