EXAMPLE NO. 1
CAPACITY OF BOLTED JOINTS

THE CONTRACTOR'S FALSEWORK PROPOSAL SHOWS THE FOLLOWING:

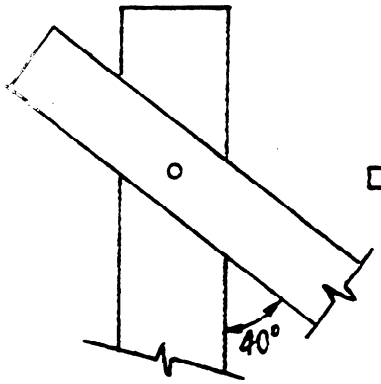

ELEVATION VIEW

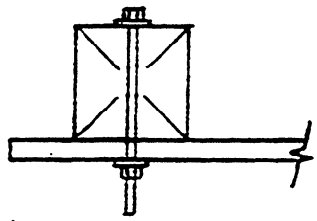

TOP VIEW

POST	12×12 ROUGH
DIAGONAL BRACE	2×8 ROUGH
CONNECTOR	1" Ø BOLT

WIND LOAD CONTROLS HORIZONTAL DESIGN FORCE

DETERMINE THE CONNECTION CAPACITY

1. CHECK BOLT CAPACITY IN THE SIDE MEMBER (2×8) FROM SECT 4-3.02 OF FW MANUAL, ENTER CHART FOR A MEMBER = 2 × THICKNESS OF SIDE MEMBER.

   2×2" = 4" P = 4610# (SIDE MEMBER IS AXIALLY LOADED ∴ PARALLEL TO GRAIN)

   FOR SINGLE SHEAR, USE 75% OF TABULATED VALUE. 0.75 × 4610 = 3503#

2. CHECK BOLT CAPACITY IN THE MAIN MEMBER (12×12) ENTER CHART FOR A MEMBER = 12"

   P = 5080# Q = 2710# SINCE THE LOAD ACTS AT A 40° ANGLE TO THE MAIN MEMBER GRAIN, HANKINSON'S FORMULA IS USED TO DETERMINE THE ALLOWABLE VALUE.

$$R = \frac{PQ}{P\sin^2\theta + Q\cos^2\theta} = \frac{5080(2710)}{5080\sin^2 40° + 2710\cos^2 40°} = 3732\#$$

   FOR SINGLE SHEAR, USE 75%. 0.75 × 3732 = 2799#

3. 2799# < 3503# ∴ MAIN MEMBER CONTROLS

4. APPLY 1.33 LOAD DURATION FACTOR SINCE THE WIND LOAD CONTROLS THE HORIZONTAL DESIGN FORCE. SEE SECT. 4-3.06 OF FW MANUAL.

   CONNECTION CAPACITY = 1.33 × 2799# = 3723#