# EXAMPLE 11 - INDIVIDUAL F/W PADS

## Example 11A - Symmetrical Loading (Section 7-2.04A)

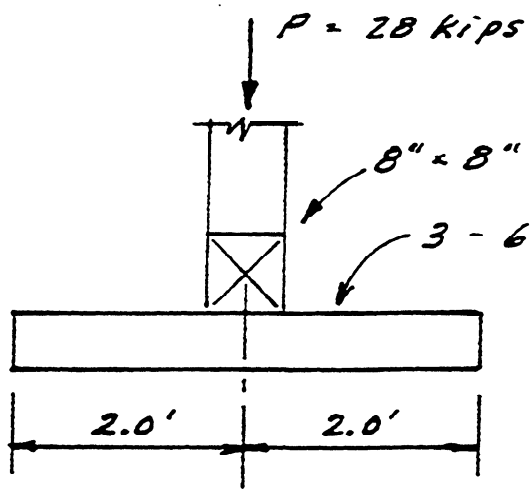


$$S = \frac{bh^2}{6} = \frac{3(12)(6)^2}{6} = 216 \text{ in}^2$$

Allowable soil pressure = 2500 psf.

## Check Pad

1. Calculate effective length

For 6" pad, $L_{SYM} = \frac{t}{12} + \frac{S}{P} = \frac{8}{12} + \frac{216}{28} = 8.38'$

2. Find the limiting length

Adjusted effective length $= 0.8L_e = 0.8(8.38) = 6.7'$

Compare adj. effective length and actual length

$6.7 > 4.0$ ; use actual length

3. Calculate soil pressure

$$\frac{P}{A} = \frac{28000}{(3.0)(4.0)} = 2333 \text{ psf} \quad \underline{OK}$$

4. Calculate stress due to horiz. shear

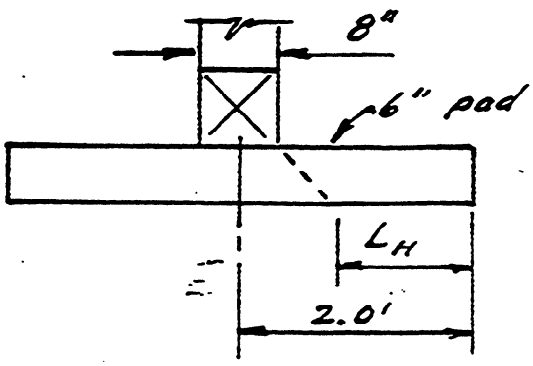


$L_H = 2.0 - 0.33 - 0.5 = 1.17'$

$V = (2333)(1.17)(3.0) = 8189$ lbs.

$$H = \frac{3V}{2A} = \frac{3(8189)}{2(6 \times 12)(3)} = 57 \text{ psi} \quad \underline{OK}$$

## Example 11A Continued

### Check Corbel

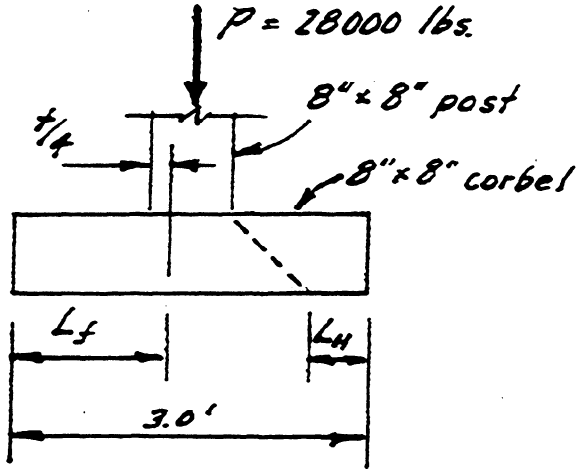


$$w = \frac{28000}{3} = 9333 \text{ lbs/foot}$$

$$S = \frac{bh^2}{6} = \frac{8(8)^2}{6} = 85.3 \text{ in}^3$$

$$A = bh = 8(8) = 64 \text{ in}^2$$

$$L_H = \frac{3.0}{2} - \frac{0.67}{2} - 0.67 = 0.5'$$

$$L_f = \frac{3.0}{2} - \frac{0.67}{2} + \frac{0.67}{4} = 1.33'$$

1. Calculate compression perpendicular to grain

$$f_c = \frac{P}{A} = \frac{28000}{64} = 438 \text{ psi} \quad \text{- OK}$$

2. Calculate horiz. shear stress

$$V = 0.5(9333) = 4667 \text{ lbs.}$$

$$H = \frac{3V}{2A} = \frac{3(4667)}{2(64)} = 109 \text{ psi} \quad \text{OK}$$

3. Calculate bending stress

$$M = \frac{wL^2}{2} = \frac{(9333)(1.33)^2}{2} = 8255 \text{ ft-lbs}$$

$$f_b = \frac{M}{S} = \frac{8255(12)}{85.3} = 1161 \text{ psi} \quad \text{OK}$$

## Example 11B - Asymmetrical Loading (Section 7-2.04B)

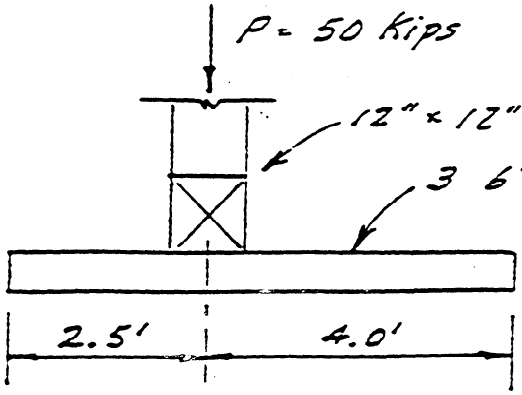


$$S = \frac{bh^2}{6} = \frac{(12 \times 4)(6)^2}{6} = 288 \text{ in}^3$$

Allow. soil pressure = 3000 psf

### Check Pad

1. Calculate adjusted effective length

$$L_{SYM} = t/12 + S/P = 12/12 + 288/50 = 6.76'$$

Adjusted effective length = 0.8(6.76) = 5.40'

2. Find limiting length on short side

Compare ½ of adj. eff. length and actual length

½(5.40) = 2.70 > 2.50 ; $L_1$ = pad length = 2.50'

Since $L_1$ = pad length on short side, pad is asymetrical for analysis.

3. Calculate limiting length on long side

$$L_{ASYM} = \frac{1}{2}\left(\frac{t}{24} + \frac{SF_b}{6000P}\right) + \sqrt{\frac{SF_b L_1}{6000P} - \frac{(t/12)^2}{16} + \left[\frac{1}{2}\left(\frac{t}{24} + \frac{SF_b}{6000P}\right)\right]^2}$$

$$L_{ASYM} = \frac{1}{2}\left(\frac{12}{24} + \frac{(288)(1500)}{(6000)(50)}\right) + \sqrt{\frac{(288)(1500)(2.5)}{(6000)(50)} - \frac{(12/12)^2}{16} + \left[\frac{1}{2}\left(\frac{12}{24} + \frac{(288)(1500)}{(6000)(50)}\right)\right]^2}$$

= 3.09' ; adjusted eff. length = 0.8(3.09) = 2.47'

Compare adjusted eff. length and pad length

2.47 < 4.0 ; $L_2$ = 2.47 = adj. eff. length

## Example 11B Continued

4. Calculate soil pressure

Bearing length $= L_1 + L_2 = 2.50 + 2.47 = 4.97'$

Soil pressure $= P/A = \frac{50000}{4(4.97)} = 2515$ psf

2515 < 3000 psf allowable OK

5. Calculate horiz shear on the long side

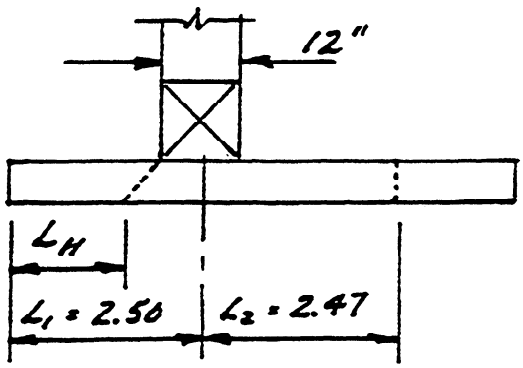


$L_H = 2.50 - \frac{6}{12} - \frac{6}{12} = 1.50'$

$V = (2515)(1.50)(4.0) = 15090$ lbs

$H = \frac{3V}{2A} = \frac{3(15090)}{2(4 \times 12)(6)} = 79$ psi

79 psi < 140 allow. OK

Note: in this example, the long side for the horizontal shear calculation is the $L_1$ side.

Check Corbel

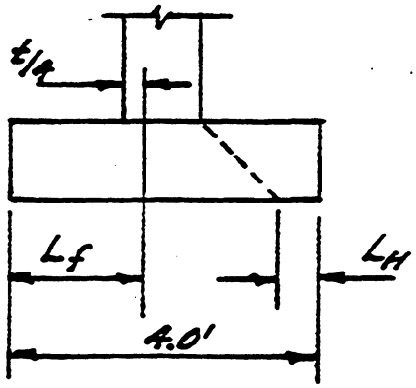


$w = \frac{50000}{4(1)} = 12500$ lbs/ft.

$S = \frac{bh^2}{6} = \frac{12(12)^2}{6} = 288$ in$^3$

$L_f = 2.0 - 0.5 + 0.25 = 1.75'$

$L_H = 2.0 - 0.5 - 1.0 = 0.5'$

1. Calculate compression perpendicular to grain

$f_c = \frac{P}{A} = \frac{50000}{12 \times 12} = 347$ psi

347 psi < 450 allowable OK

Example 11B Continued

2. Calculate stress due to horiz. shear

$$V = (12500)(0.5) = 6250 \text{ lbs}$$

$$H = \frac{3V}{2A} = \frac{(3)(6250)}{(2)(12 \times 12)} = 65 \text{ psi}$$

65 psi < 140 allowable OK

3. Calculate bending stress

$$M = \frac{wL^2}{2} = \frac{(12500)(1.75)^2}{2} = 19141 \text{ ft-lbs}$$

$$f_b = \frac{M}{S} = \frac{(19141)(12)}{288} = 798 \text{ psi}$$

798 psi < 1800 allowable OK