EXAMPLE NO. 3

ADEQUACY OF DIAGONAL BRACING
SINGLE TIER FRAMED BENT - NAILED CONNECTIONS

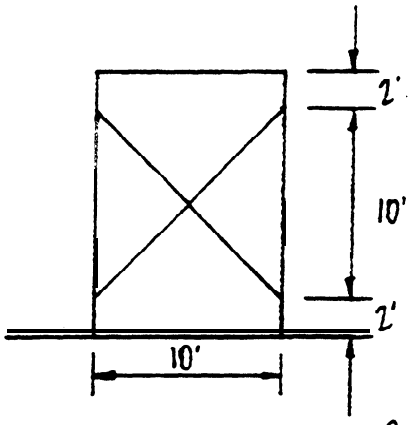

2% DEAD LOAD = 1900#
WIND LOAD = 1800#

POSTS: 12 × 12 ROUGH

DIAGONAL BRACES: 2 × 8 S4S

CONNECTORS:
- BRACE TO POST — 10-20d NAILS
- INTERSECTION OF BRACE — 4-16d NAILS

IS THE BRACING SYSTEM ADEQUATE?

1. DETERMINE THE STRENGTH OF THE CONNECTION BETWEEN BRACE AND POST.

REF. N.D.S. TABLE 8.8C

20d COMMON WIRE NAILS
LENGTH = 4"
DIAMETER = 0.192"

SPECIES GROUP II: LATERAL DESIGN VALUE = 139#
FOR MINIMUM PENETRATION = 0.192 × 11 = 2.11"

LOAD CAPACITY = 10 × 139 × 1.25 = 1738#

(APPLY 1.25 LOAD DURATION FACTOR TO CONNECTION CAPACITY SINCE 2% DEAD LOAD CONTROLS THE HORIZONTAL DESIGN FORCE.)

PENETRATION = 4" − 1.5" = 2.5" > 2.11" OK

2. DETERMINE THE STRENGTH OF THE DIAGONAL BRACE IN TENSION

$F_T = 1200\,PSI\,(1.5" \times 7.25") = 13050\#$

3. DETERMINE THE STRENGTH VALUE OF THE TENSION MEMBERS

13050# > 1738# ∴ CONNECTION CONTROLS TENSION

4. CALCULATE THE HORIZONTAL COMPONENT OF THE STRENGTH VALUE FOR THE TENSION MEMBERS.

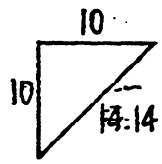

$T = 1738 \times \frac{10}{14.14} = 1229\#$

5. DETERMINE THE STRENGTH OF THE DIAGONAL BRACES IN COMPRESSION

CONNECTION = 1138# FROM ABOVE

ALLOWABLE COMPRESSION IN 2×8.

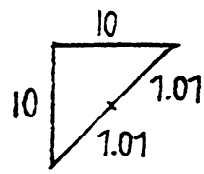

CHECK ADEQUACY OF CONNECTION TO REDUCE UNSUPPORTED LENGTH OF COMPRESSION MEMBER.

REF: N.D.S. TABLE 8.8B
ASSUME SPECIFIC GRAVITY G = 0.51
16d COMMON NAILS
WITHDRAWAL CAPACITY = 42#/INCH OF PENETRATION

CAPACITY OF 4 EA 16d NAILS = 4 × 42# × 1.5" × 1.25 = 315# > 250# OK

LOAD DURATION

SEE FW MANUAL SECT. 5-1.03

$$\frac{480000}{(L/d)^2} = \frac{480000}{(1.07 \times 12/1.5)^2} = 150 \text{ PSI}$$

150 PSI (1.5 × 1.25) = 1631#

6. DETERMINE THE STRENGTH VALUE OF THE COMPRESSION MEMBERS

1631# < 1138# ∴ 2×8 BRACE CONTROLS COMPRESSION

ALLOW ½ THEORETICAL STRENGTH FOR COMPRESSION VALUE ½ × 1631 = 816#

7. CALCULATE THE HORIZONTAL COMPONENT OF THE STRENGTH VALUE FOR THE COMPRESSION MEMBER.

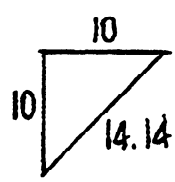

$$C = 816 \times \frac{10}{14.14} = 577\#$$

8. CALCULATE THE TOTAL RESISTING CAPACITY OF THE DIAGONAL BRACING SYSTEM.

TOTAL = C + T = 577# + 1229# = 1806#

RESISTING CAPACITY, 1806# < COLLAPSING FORCE, 1900#

BRACING SYSTEM IS INADEQUATE