Trenching and Shoring

WINTER TRAINING 2010

Housekeeping

- Turn of cell phones
- Rest Rooms
- Return from Breaks on-time. Instructors will start on-time
- Lunch – On your own
- Class Charging Information
  - Timesheet EA – 910070
    - » Special Designation – G101100
    - » Activity Code – 2059
  - TEC EA – 910070
    - » Special Designation – G101100
    - » Activity Code – Per charge type

Around the Room Introductions

- How long with OSC?
- Current Project
- Any Trenching and Shoring Experience?
- Something unique about yourself where your fellow colleagues will say, "I didn't know that"

Instructor Introductions

Steve Yee, P.E. – Lead Instructor

- UC Davis in 1977 (BS)
- OSC for 31 1/2 years
- WT instructor in 1987 (Bridge Foundations)
- WT instructor in 1990 (Trenching and Shoring)
- Lead WT instructor in 2003 (Trenching and Shoring)
- Principal trumpet with 2 Symphony Orchestras in San Diego
- Pomerado Brass Quintet

Steve Yee, P.E.

- Enjoy sailing
- Married 32 years with 2 sons
- Kevin – age 25 – Attorney and is married
- David – age 23 – 1st year of Pharmacy School at UC San Diego

Bob Price, P.E.

- 21 years at Caltrans (all at Translab)
- 4 years at private consulting firms
- Graduated in 1985 from University of Nevada – Reno)
- B.S in Geological Engineering
- Served in the US Navy aboard a Nuclear Fast Attack Submarine

Bob Price, P.E.

- Full –time bicycle commuter
- Rode 8,000 miles in 2009
- "If I can't go there on my bike, I don't need to be there"

Anoosh Shamsabadi, Ph.D., P.E.

- More than 20 years of professional experience in civil and geotechnical engineering
- SBE with the Office of Earthquake Engineering
- Soil-Foundation-Structure Interaction Specialist
- WT Instructor in 2003 (Trenching and Shoring)
- Taught soil mechanics and foundation design courses at UC Irvine (2007-2009).

Anoosh Shamsabadi, Ph.D., P.E.

- Key contributor and collaborator in the development of the Trenching and Shoring Computer Program
- Key contributor and collaborator in updating and re-writing the current Trenching and Shoring Manual

Tony English, P.E.

- Graduated from Chico State in 1998 with a BSCE
- Work for OSC in 1997 as student assistant
- Permanent OSC employee 1998.
- WT Instructor in 2003 (Trenching and Shoring)
- Completed his 1st triathlon in 2009 and plans on completing at least 3 more in this year.

Tony English, P.E.

- Avid mountain biker and bike commuter and just learning to be a roadie
- Married – Daughter age 6 and a son age 3

Margie Perez, P.E.

- UC Davis in 1993 (BS)
- Worked 2 ½ years with Teichert Construction and 1 year with Dokken Engineering
- 12 years with OSC
- Enjoys flying a cessna over the coast in Southern California
- Enjoys hiking at Torrey Pines State Park
- Enjoys reading a good novel

Agenda – Presentation Topics

- Introduction and Legal Requirements – Steve Yee
- Cal/OSHA Construction Safety Orders – Steve Yee and Bob Price
- Soil Classification and Properties – Bob Price
- Soil Mechanics, Earth Pressure Theory, Loading and Cofferdams – Anoosh Shamsabadi
- Surcharges – Tony English
- Sheet Pile and Soldier Pile Systems – Margie Perez
- Tie-back Systems and Soil Nails – Tony English
- Railroad Requirements – Tony English
- T & S Computer Program Demonstration – Margie Perez and Tony English
- Post Test – "Are you smarter than a Senior Bridge Engineer?" – Tony English and Margie Perez

What's Wrong With This Picture?

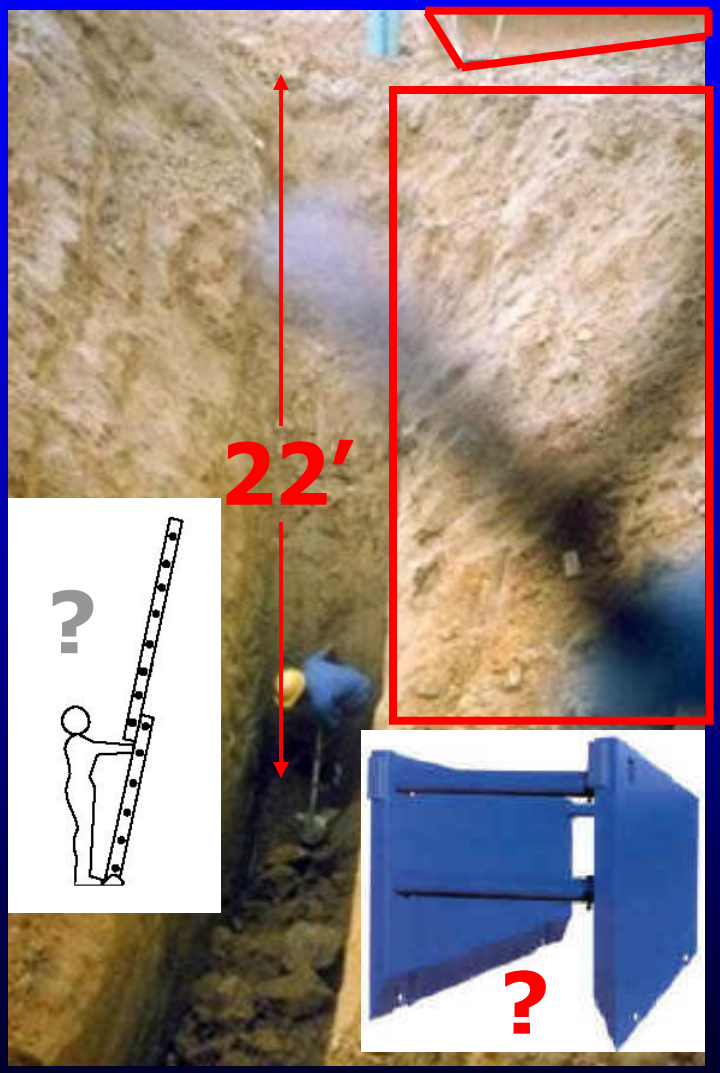

- 22 ft. deep vertical trench
- Excavated soil stockpiled at edge of trench
- Vibrations from backhoe at perimeter of excavation
- No sloping, shoring, or shielding
- No ramp or ladder

Inadequate Protective System

Inadequate Protective System

Hazardous Conditions

The following hazards cause the most trenching and excavation injuries:

- No protective system
- Failure to inspect trench and protective systems
- Unsafe spoil-pile placement
- Unsafe access/egress

The Cost of Cave-Ins

- Excavation and trenching cave-ins result in more than a hundred fatalities annually in the United States. With little or no warning, a poorly shored or un-shored trench or excavation can collapse trapping the workers below in seconds.
- Each year, for every fatality, there are an estimated fifty serious injuries.

The Cost of Cave-Ins

- In addition to human losses due to excavation and trenching accidents, the financial losses can be staggering.
- Property damage and work stoppage.
- Workers Compensation Claims
- Claims against Caltrans
- AB 1127 – Cal/OSHA can fine other Governmental agencies

Important!

- If unsafe, we have the authority to order the worker(s) out of the excavation and shut down the operation
- You could be personally liable if something happens.

Legal Requirements

Instructor: Steve Yee
(858) 688-1465

Overview

We will cover:

- Applicable Standard Specifications, Laws, and Regulations
- Contractor's Responsibilities
- Engineer's Responsibilities
- Shoring Plan Requirements

If you are using 1999 Standard Specifications…

- Special Provisions - 5-1.02A Excavation Safety Plans amends the 1999 Standard Specifications to read…
- The Construction Safety Orders of the Division of Occupational Safety and Health shall apply to all excavations.
- For excavations 1.5 m or more in depth, the Contractor shall submit to the Engineer a detailed plan showing the design and details of the protective system to be provided for worker protection from the hazard of caving ground during excavation.

Trench: D > W

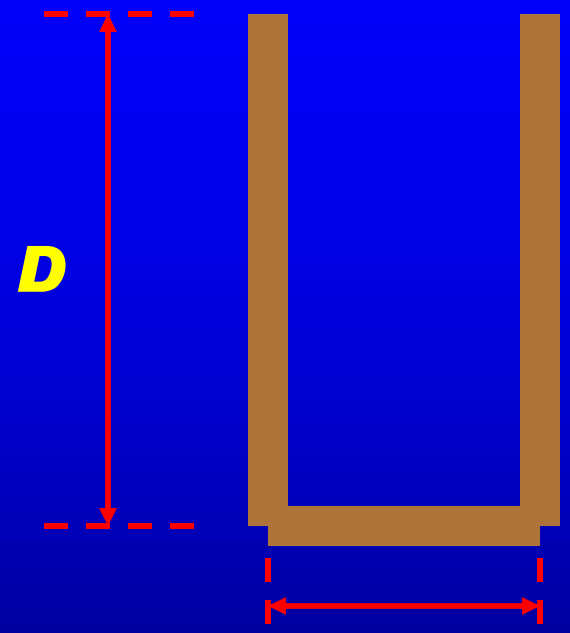

Excavation: W > D

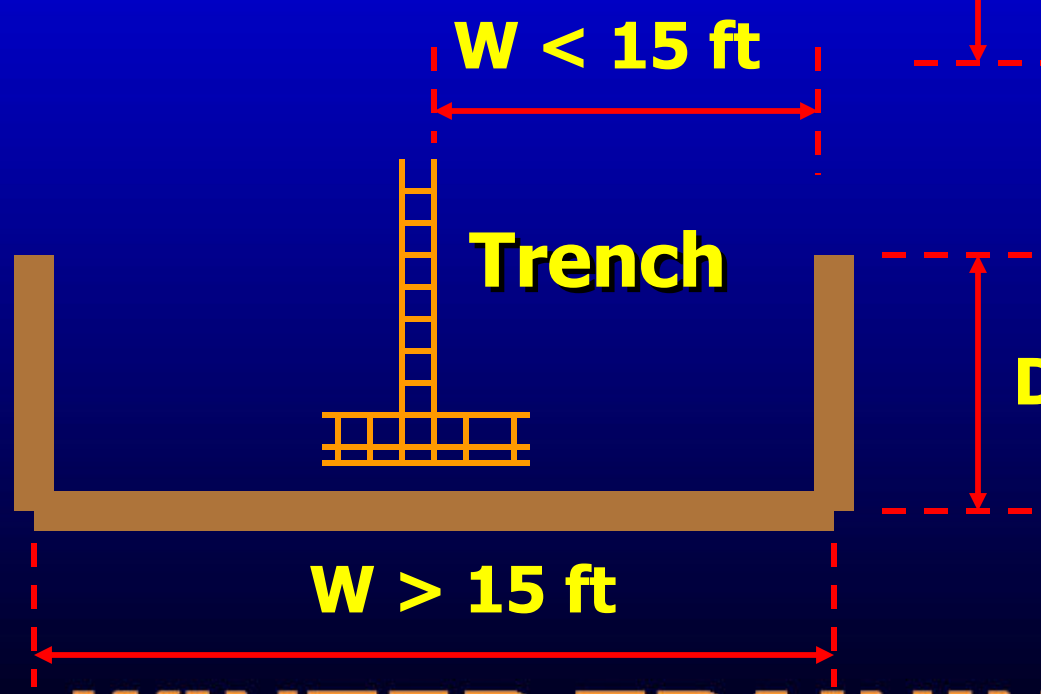

Excavations

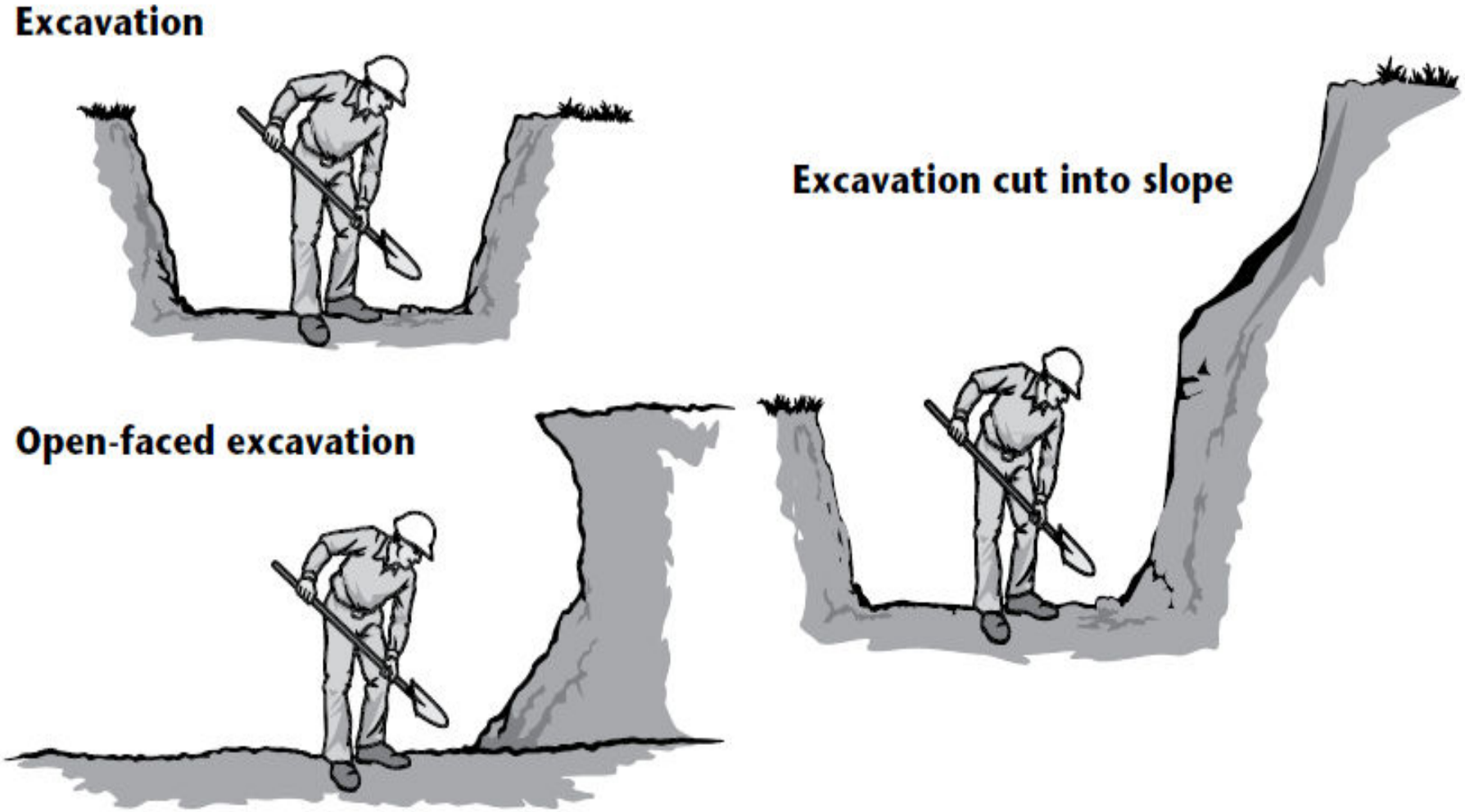

Trench

- **Typical trench**

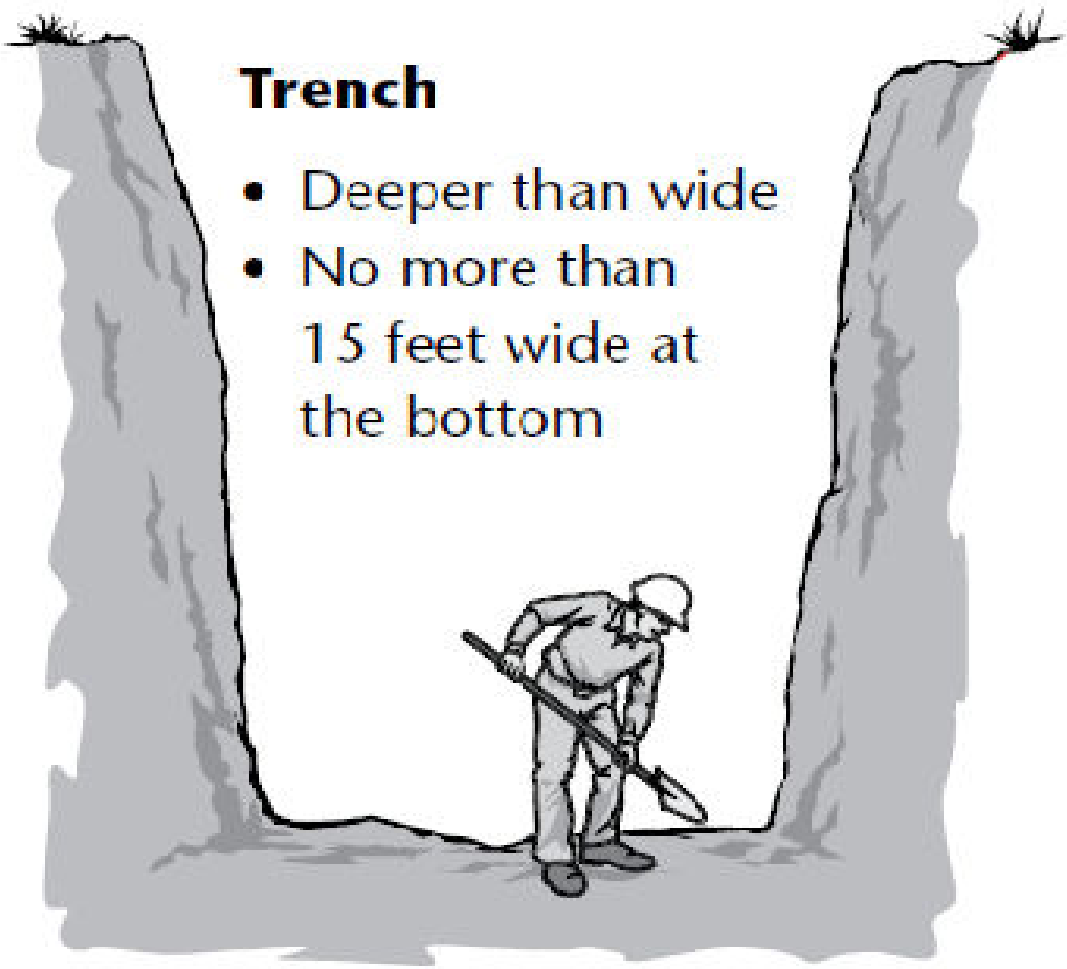

Trench

- Trench created by formwork

WINTER TRAINING 2010

WINTER TRAINING 2010

2006 Standard Specifications

Section 5-1.02A Excavations Safety Plans

- The Construction Safety Orders of the Division of Occupational Safety shall apply to all excavations. For all excavations 5 feet or more in depth, the Contractor shall submit to the Engineer a detailed plan showing the design and details of the protective systems to be used for worker protection from the hazard of caving ground during excavation. The detailed plan shall include any tabulated data and any design calculations used in the preparation of the plan. Excavation shall not begin until the detailed plan has been approved by the Engineer.

2006 Standard Specifications

Section 5-1.02A Excavations Safety Plans (Cont.)

- Detailed plans of the protective systems for which the Construction Safety Orders require design by a registered professional engineer shall be prepared and signed by an engineer who is registered as a Civil Engineer in the State of California, and shall include the soil classification, soil properties, soil design calculations that demonstrate adequate stability of the protective system, and any other design calculations used in preparation of the plan.

2006 Standard Specifications

Section 5-1.02A Excavations Safety Plans (Cont.)

- No plan shall allow the use of a protective system less effective than that required by the Construction Safety Orders.
- If the detailed plan includes designs of protective systems developed only from the allowable configurations and slopes, or Appendices, contained in the Construction Safety Orders, the plan shall be submitted at least 5 days before the Contractor intends to begin excavation.

2006 Standard Specifications

Section 5-1.02A Excavations Safety Plans (Cont.)

- If the detailed plan includes designs of protective systems developed from tabulated data, or designs for which design by a registered professional engineer is required, the plan shall be submitted at least 3 weeks before the Contractor intends to begin excavation.
- Attention is directed to Sections 7-1.01E, "Trench Safety".

2006 Standard Specifications

Section 7-1.01E Trench Safety

- Attention is directed to the requirements in Section 6705 of the Labor Code concerning trench excavation safety plans.

Labor Code

- Section 6705 established that for public works projects involving an estimated expenditure of $25,000 for the excavation of any trench or trenches, five feet or more in depth, the Contractor must submit shoring plans to the awarding body.

Labor Code

Significant Sections

- Division 5 Section 6300 creates Cal/OSHA
- Division 5 Section 6307 – Cal/OSHA has the power, jurisdiction, and supervision over every place of employment to enforce and administer laws (Safety Orders)
- Division 5 Section 6407 states that every employer and every employee shall comply with the occupational safety and health standards.

2006 Standard Specifications

Section 7-1.11 and Section 19-1.02

Preservation of Property

- The Contractor shall perform the work such that existing structures will not be affected.
- The Contractor, at the Contractor's expense, shall furnish and install sheet piling, cribbing, bulkheads, shores or whatever means may be necessary to adequately support the facility and shall maintain the supports until they are no longer needed.

2010 Standard Specifications (Plain Language)

Excavation Safety

- Comply with Labor Code Section 6705 while excavating. For an excavation 5 feet or more in depth, submit shop drawings for a protective system.
- The drawings must show the design and details for providing worker protection from caving ground during excavation. Submittal must allow the review time and include the contents shown in the following table except the review time is 65 days for an excavation on or affecting railroad property:

2010 Standard Specifications
(Plain Language)
Excavation Safety

Drawing Review Time and Contents

	Plan not requiring a signature	Plan requiring a signature
Review time	5 business days before excavation	20 days before excavating
Contents	Drawings Calculations Material information Proprietary system information	Drawings Calculations Material information Proprietary system information Soil classification Soil properties Soil design calculations

State Statutes

Section 137.6 of Article 3 in Chapter 1 of Division 1

- Requires that the review and approval of Contractor's plan for temporary structures in connection with the construction of State Highways shall be done by a Registered Professional Engineer.
- This means that the Engineer has the responsibility to see that appropriate plans are submitted and properly reviewed for work to be performed within the State right of way.

Cal/OSHA
A.K.A Division of Occupational Safety and Health (DOSH)

- Creates the Construction Safety Orders
- Polices conformance with the Construction Safety Orders
- State of California Code of Regulations

Title 8. Industrial Relations

Division 1. Department of Industrial Relations

Chapter 4. Division of Industrial Safety

Subchapter 4. Construction Safety Orders

Article 6. Excavations

Sections 1539 – 1543

Competent Person

The Contractor must provide a Competent Person and that person must be on the site to do the following:

- Conduct inspections of the excavations, adjacent areas, protective systems before the start of work; as needed throughout the shift; and daily for potential cave-ins, failures, hazardous atmospheres, or other hazards.
- Take prompt corrective action or remove employees from the hazard.

Competent Person

- Ability to recognize all possible hazards associated with excavation work and to test for hazardous atmospheres.
- Knowledge of the current safety orders pertaining to excavation and trenching.
- Ability to analyze and classify soils.
- Knowledge of the design and use of protective systems.
- Authority and ability to take prompt corrective action when conditions change.

Competent Person

Knowledge

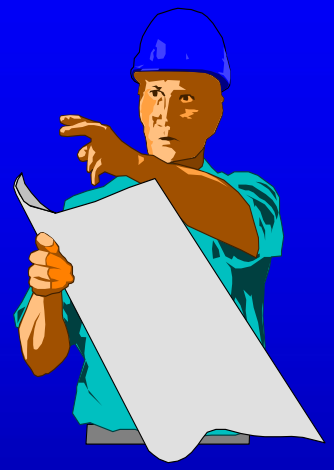

Authority

Trench & Shore

There are significant safety issues to be considered in the construction environment.

Pacific Safety Council
9880 Via Pasar, Suite F
San Diego, CA 92126
tele: 858-621-2313
fax: 858-689-0040
www.pscsd.com

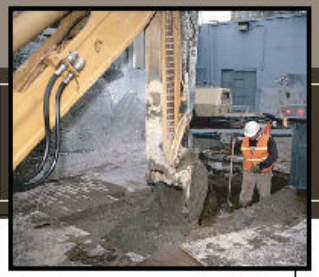

Course Description

This Competent person program meets the Construction Safety Orders Sections 1504, 1539-1543, CCR Title 8 Article 2. This course is designed to assist in identifying existing and predictable hazards in the surroundings or working conditions, which are hazardous or dangerous to employees. This course includes: the shoring standard, duties and required knowledge, soil analysis, hydraulic shoring, shoring boxes and shields, sloping and benching and trenches as confined spaces and much more.

Expect to Learn

The course content includes:

- The shoring standard
- Duties and required knowledge
- Soil analysis
- Hydraulic shoring
- Shoring boxes and shields
- Sloping and benching
- Trenches as confined spaces

Friendly FYI:
If the above dates and times do not fall within your timeframe, please call 858-621-2313 x.112 for information about on-site training and consulting.

Dates/Times/Location

- June 09, 2009 (San Diego)
- September 17, 2009 (San Diego)
- December 17, 2009 (San Diego)

All dates: 8:00am - 5:00pm

To Register

- www.pscsd.com
- 888-846-4200

Who Should Attend

- Safety Professionals- Safety Directors, Safety Managers
- Construction crew operators, field-level employees
- Facilities Directors, Operations Managers, Plant Managers

Format & Investment

Course Length:	8 hrs
Certificate Offered:	Yes
Member Price:	$125
Non-Member Price:	$155
Contact Hours:	8

Pacific Safety Council

Certificate of Completion

For

Trench & Shore
Competent Person Training

is awarded to

Steven Yee

has successfully completed this eight hour course covering:
Construction Safety Standards, OSHA & Cal/OSHA Regulations,
Trench Stability, and Hazard Identification & Control.

Pacific Safety Council

Darby Vorce
Executive Director
October 23, 2002

Permits
(Section 1539 of the CSO)

- Contractor must obtain a permit from Cal/OSHA if workers are required to enter an excavation that is 5 ft. or deeper.
- A Cal/OSHA permit is not an approval of any shoring plan.
- Puts Cal/OSHA on notice that potentially hazardous work is scheduled at a specific location. Cal/OSHA may then arrange to inspect the work.
- It is the responsibility of the Engineer to ascertain that the Contractor has secured a proper permit before allowing any trenching or excavation work to begin.

Permits

Safety permit conference with Cal/OSHA

- Shall be attended by the permit applicant, who must be knowledgeable about and in a position of authority and responsibility with respect to the permitted activity
- The potential safety and health risk of the activity shall be discussed, and the contractor shall identify specific measures to be taken to minimize these risks to employees
- Details of the activity shall be reviewed along with Title 8 Safety Orders applicable to the activity in which the permit applicant will engage
- The permit applicant shall provide enough detail about the construction activity to allow the district office to make a reliable determination that the activity will proceed safely

State of California
Department of Industrial Relations
Division of Occupational Safety & Health

PERMIT APPLICATION FORM

Buildings/Structures, Scaffolding/Falsework, Demolition, Trenches/Excavations

Section 6500, 6501 and 6502 of the California Labor Code require that certain activities, which by their nature involve substantial risk of injury, may not be performed without a permit issued by DOSH. The Labor Code requires that the applicant supply, and that the Division review, information necessary to evaluate the safety of the workplace subject to permit requirements. A permit will not be issued until evidence has been demonstrated that the place of employment will be safe and healthful.

Employer: _____ Employers'Rep.: _____
Address: _____ Title & Phone No.: _____
_____ State Contractor's License No.: _____
Phone: _____ Fax: _____

Check Applicable Items:

Applicant is:

_____ Project Administrator
_____ Specialty Contractor
Type _____

Applicant refers to contractor or knowledgeable representative in a position of authority and responsibility for the activity covered by this permit.

_____ Other

Type of Permit Sought:

_____ Annual Permit
_____ Project Permit
_____ Temporary Permit (Plan Check Only)

_____ Multiple Project, (If projects covered are similar in all important aspects, work is performed by the same employer and information concerning each project is provided)

For:

_____ Construction of: _____ Building _____ Structure
_____ Scaffolding, Falsework and/or Vertical Shoring
_____ Demolition of: _____ Building _____ Structure
_____ Trench and/or Excavation

Any permit based on this application is issued with the understanding that the applicant has knowledge of occupational safety and health orders applicable to the project(s) described in the application and attachements and that the applicant and supervising personnel will take special care to ensure compliance with safety orders reviewed with the applicant by the Division in the application process.

Issuance of the permit is also conditioned upon the following:

1) Upon initiation of any new project not described in the application the holder of an Annual Permit will provide the Division with a completed Activity Notification Form for Holders of Annual Permits describing the new project prior to the start of work preferably at least one week in advance of the start-up date.

2) The applicant has implemented a written Injury and Illness Prevention Program and Code of Safe Practices which meet the requirements of 8 CCR Sections 1509 & 3203.

3) The Division will be notified of significant changes in information provided with the application if such changes might affect the safety of the activity.

4) The applicant for a Trench and/or Excavation Permit shall designate a **competent person** in accordance with the requirements of 8 CCR 1504, 1541 and 1541.1. for each Trench and/or Excavation project.

5) The applicant understands that under the permit program DOSH schedules routine inspections by authorized personnel for the purpose of verifying that holders of Annual or Activity Permits are meeting their obligation to provide a safe work place for their employees. The Division reserves the right to revoke or suspend a permit if it is unable to promptly verify compliance with the terms and conditions of the permit and its issuance.

6) The applicant understands that failure to comply with any of the above listed conditions for obtaining a permit could result in denial, suspension, or the revocation of the permit. Employers may appeal these actions to the Director of the Department of Industrial Relations (California Labor Code Section 6500 et. Seq. and 8 CCR 341)

Is the applicant conducting any activities to be covered by this Permit Application Form, as a partnership or joint venture with any other persons or corporations conducting activities requiring permits?
Yes_____ No_____ If yes, give details _____

Have any permits for any project to be covered by this permit application previously been applied for or obtained? Yes _____ No _____ If yes, when _____

from what district office _____

in whose name _____

DIVISION USE ONLY	I hereby certify that to the best of my knowledge all information and assertions made on the Permit Application and/or Activity Notification Form are true and correct and that I/the applicant have knowledge of and will comply with the foregoing.
Fee _____	
Paid _____	Signature: _____
Approved _____	Title: _____
Conference _____	Date: _____
Other _____	

CAL/OSHA 41-1 (10/29/2008)

Permits

- Annual permit ($100) is good statewide
- Permit is valid from January 1st to December 31st
- Project or single permit ($50) is only good for one location
- It can be used for multiple excavations within one job site.
- The Contractor must submit to Cal/OSHA an activity notification form before each excavation

Shoring Plans

Use of Standard Details (Construction Safety Orders)

- Shoring "Plan" is still required
- "Plan" can be a letter to the Resident Engineer
- It is not required that a PE prepare the plan

Caution!

- Conditions may be such that the Details in the Construction Safety Orders will not apply directly.
- The Construction Safety Order Figures and Tables provide for a minimum construction surcharge of 72 psf. No provision is made made for nearby traffic, adjacent structure loadings or for dynamic loadings. When a surcharge load exceeds the minimum construction surcharge of 72 psf, an "engineered" system is required.

Caution!

- Do not accept and file in the job records a plan from the Contractor that simply states in a letter, "All trenches and excavations will conform to the Construction Safety Orders."

Use of Standard Details
"Plan" or Letter should contain

- Description of work to be done and its specific location.
- Anticipated soil description or classification
- Basic dimensions of the trench (width, depth, and length)
- Identify or refer to the specific Cal/OSHA figures or tables to be used.
- Any other information which will pertain to the progress of the work.
- Who will be in charge of the work.
- Who will be the designated "competent" person responsible for safety.

Professional Engineer Designed or "Engineered" Systems

- Proposed plan must provide a system at least as effective as the CSO Standard Details
- Plan must be prepared and signed by a registered Civil or Structural Engineer
- Same information as provided for Standard Details
- An engineering drawing showing sizes, spacing, connections, etc. of materials
- Appropriate soils data
- Supporting data such as design calculations or material tests

Shoring Plan

Important Points:

- Soils Properties or Data – Be sure you agree with the Contractor before you start your analysis. (γ, ϕ, C)
- Contractor may use design techniques other than those shown in the manual.
- Keep in mind that the Trenching and Shoring Manual is not a contract document.
- Make sure your are notified of all excavations, including District excavations.

Shoring Plans

When performing a shoring plan analysis:

- Determine the soil properties -
  - γ - Gamma, the unit weight of the soil
  - ϕ - Phi, the soils angle of internal friction
  - C - The cohesive value of the soil
- Determine lateral loads – earth pressure and surcharges
- Distribution of lateral pressures in the form of a pressure diagram – triangular or trapezoidal
- Perform structural analysis of the members comprising the shoring system

Administrative Procedure
Five Step Process

Steps 1 through 4

- Contractor submits plan to the Engineer
- Engineer reviews the plan
- Engineer completes the review
- Engineer writes the approval letter

Administrative Procedure

Step 5

Structure Representative retains in the job file

- 1 set of approved shoring plans
- 1 set of calculations
- Copy of the approval letter

STATE OF CALIFORNIA-BUSINESS TRANSPORTATION AND HOUSING AGENCY PETE WILSON, Governor

DEPARTMENT OF TRANSPORTATION
ENGINEERING SERVICE CENTER
OFFICE OF STRUCTURE CONSTRUCTION MS-9
P.O. Box 942874
SACRAMENT0, CA 94274-0001

(916) 227-7777
(916) 227-8835
FAX (916)227-8179

June 1,1997

Co-Rte-PM
00-000104

Sample Construction Co.
Sample Lane
Sample, CA 00000-0000

Gentlemen:

The shoring plans for the temporary retainment of soil and embankment material at Abutment 1 of General Avenue Overcrossing, Bridge No. 2B-X4X, dated August 14,1989, have been reviewed and are approved to the extent provided in Section 5-1.02 of the Standard Specifications. [Add the following when using the contractor'/consultant's soil parameters; This approval is based upon the soil parameters submitted by your consultant.] [Add when needed for trench shields; Note that your submittal did not include calculations from the trench shield design engineer. It is therefore understood that your licensed engineer has verified that the shields themselves are capable of sustaining the loads allowed by the shield manufacturer.]

Your attention is directed to your responsibilities pursuant to Section 5-l-02 and 7-1.09, of
rs.

onform to the shoring drawings,
he stresses required by the
at the shoring will support the

Bridge Construction Memo 122-1.0

W.W. Strurep
Structure Representative

c:

BRIDGE CONSTRUCTION MEMO 122-1.0
Attachment 1 (06/01/97)
Sheet 1 of 1

Summary

- Applicable Standard Specifications, Laws and Regulations
- Contractor's Responsibilities
- Engineer's Responsibilities
- Shoring Plan Requirements

Where to Get More Information

- California Labor Code
- Construction Safety Orders
- Caltrans Standard Specifications
- Caltrans Special Provisions
- Contract and Standard Plans
- Caltrans Trenching and Shoring Manual

Where to Get More Information

OSC Earth Retaining Systems Technical Committee

Jeff Abercrombie - Sponsor

Alex Angha – Chair

Steve Harvey – Co-Chair

OSC Falsework and Trenching and Shoring Engineer

Ajay Sehgal

Questions?

Cal/OSHA Construction Safety Orders

Instructor: Steve Yee
(858) 688-1465

WINTER TRAINING 2010

Overview

- Definitions
- Excavations 20 ft. deep or less
- Excavations over 20 ft. deep or deviations
- Important Requirements
- Competent Person Responsibilities
- Soil Classification (Appendix A) – Bob Price
- Basis of Soil Classification (Appendix A) – Bob Price
- Visual Tests (Appendix A) - Bob Price
- Manual Tests (Appendix A) – Bob Price
- Methods of Protection
- Case Studies
- Important items to check when reviewing excavation work and approving shoring plans

Definitions

- Aluminum Hydraulic Shoring – A pre-engineered shoring system comprised of aluminum hydraulic cylinders (cross-braces) used in conjunction with vertical rails (uprights) or horizontal rails (walers). Such system is designed specifically to support the sidewalls of an excavation and prevent cave-ins.
- Benching (Benching System) – A method of protecting workers from cave-ins by excavating the sides of an excavation to form one or a series of horizontal levels or steps, usually with vertical or near-vertical surfaces between levels.

Definitions

- Protective System – A method of protecting workers from cave-ins, from material that could fall or roll from an excavation face or into an excavation, or from collapse of adjacent structures. Protective systems include support systems, sloping and benching systems, shield systems, and other systems that provide the necessary protection.
- Shield (Shield System) – A structure that is able to withstand the forces imposed on it by a cave-in and thereby protect workers within the structure. Shields may be either pre-manufactured or job-built.
- Shoring (Shoring System) – A structure such as metal hydraulic, mechanical, or timber shoring system that supports the side of an excavation and which is designed to prevent cave-ins.

Definitions

- Sloping (Sloping System) – A method of protecting workers from cave-ins by sloping the sides of an excavation that are inclined away from the excavation so as to prevent cave-ins. The slope angle varies with the soil type, surcharges, and weather.
- Tabulated Data – Tables and charts approved by a registered professional engineer and used to design and construct a protective system.

Excavations 20’ Deep or Less

The Construction Safety Orders provide for a variety of excavation plans for worker protection in excavations.

- For excavations less than 20’ in depth the Contractor may use:
  - Sloping or Benching of the soil
  - Tables for timber or aluminum hydraulic shoring
  - Shields
  - Shoring may be designed by a California PE

Excavations Over 20' Deep - Deviations

A California PE design will be required:

- Deviations from the sloping criteria are used
- Deviations not covered in the Safety Orders from the timber or aluminum hydraulic shoring tables
- Shields that are used in a manner not recommended or approved by the manufacturer
- When surcharges must be accounted for
- Alternate designs are used

Important Requirements

Underground Installations

- Underground utilities must be located prior to excavation
- The Contractor should notify all regional notification centers and all underground utility owners who are not members of the notification centers a minimum of 2 working days prior to the start of work
- Excavation in the vicinity of the underground utility must be undertaken in a careful manner while supporting and protecting utilities

Important Requirements

Egress Provisions

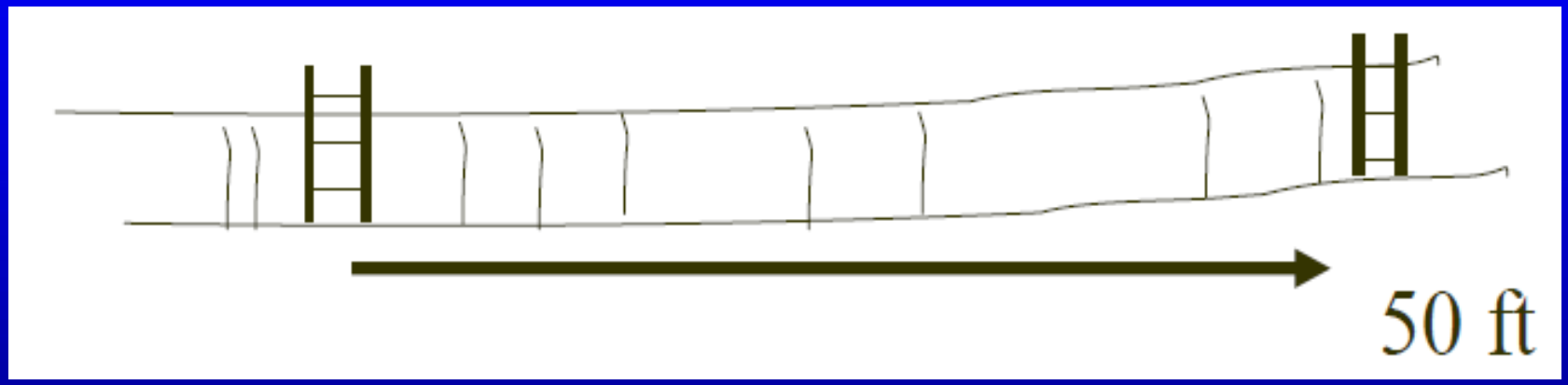

- Egress provisions which may include ladders, ramps, stairways, or other means shall be provided for excavations over 4 feet in depth so that no more than 25 feet of lateral travel will be needed to exit trench excavations

Important Requirements

- Adequate protection from hazardous atmospheres must be provided
- Workers shall be protected from the hazards of accumulating water, from loose or falling debris, or from potentially unstable adjacent structures.
- Daily inspections, inspections after rain storms and as otherwise required for hazardous conditions, are to be made by a competent person.
- Inspections must be conducted prior to the start of the work and as needed throughout the shift.

Important Requirement

- The competent person will need to check for potential cave-ins, indications of failure of the protective system and for hazardous atmospheres.

Hazardous Atmospheres

Hazardous atmospheres can occur in excavations near landfills, sites contaminated by leaking gas lines or storage tanks, in sewers, and in other confined spaces. A competent person must test for oxygen deficiency (oxygen levels less than 19.5 %) and hazardous atmospheres before workers can enter.

Important Requirement

- When the competent person finds a hazardous situation he/she shall have the endangered workers removed from the area until the necessary precautions have been made to insure their safety.

Competent Person Responsibilities

- Design structural ramps
- Monitor water removal equipment and operations
- Inspect excavations, adjacent areas, and protective systems daily, prior to start of work, as needed throughout the shift, and after every rainstorm or hazard increasing occurrence
- Remove workers from the hazard until the necessary precautions are taken
- Examine materials and equipment for continued use and if unusable, remove from service
- Classify the soil and if necessary, re-classify the soil after changed conditions

Important Requirement

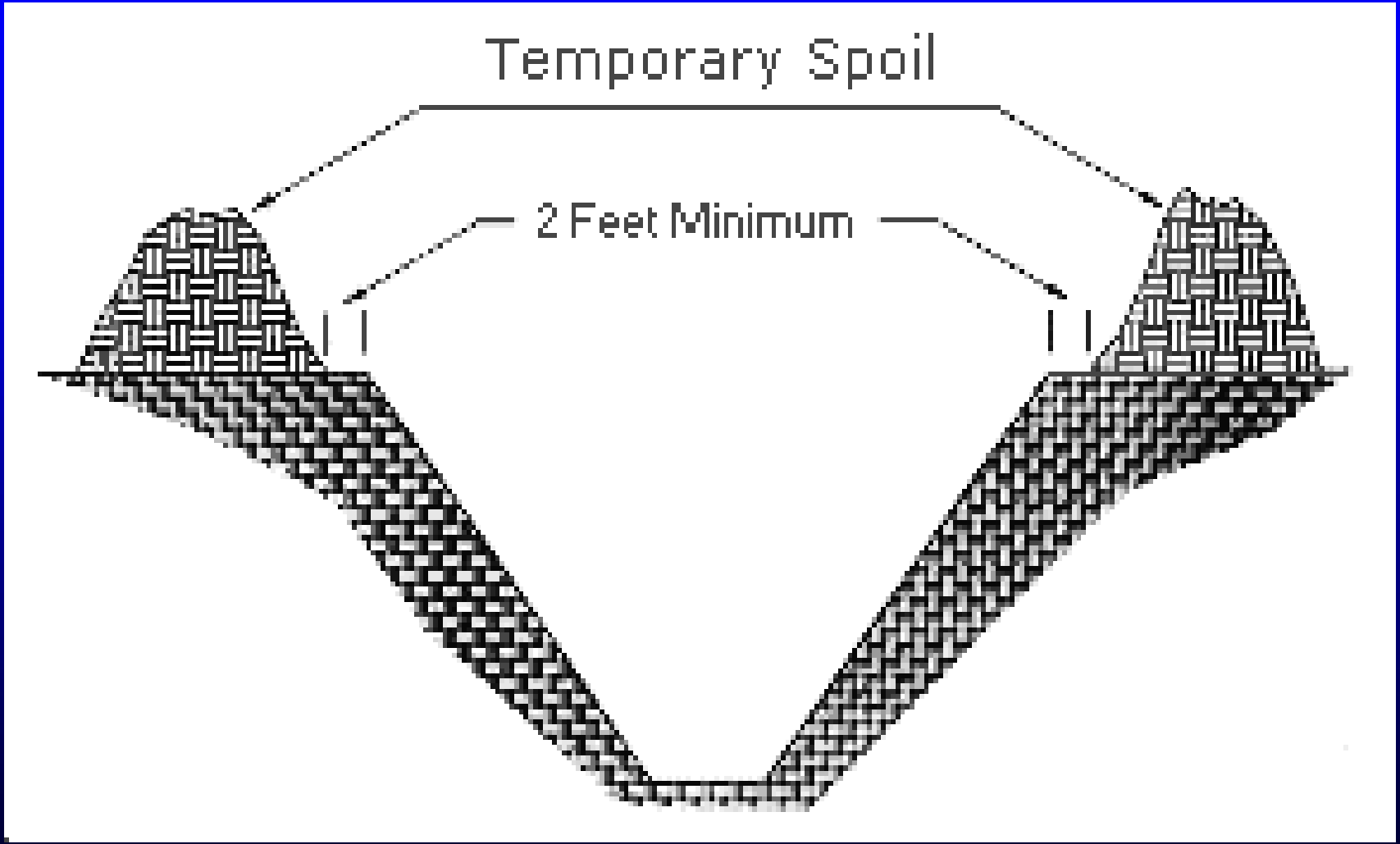

Appendix A in the Construction Safety Orders

- Soil Classification – Stable rock, Type A, Type B, and Type C soil.
- Basis of Classification – The competent person shall classify the deposits based on the results of at least one visual and at least one manual analysis.
- Visual and Manual Tests

Bob Price - Instructor

Soil Classification

- Soil Classification is addressed in section 1541.1 Requirements for Protective Systems, **Appendix A**
- Each soil and rock deposit must be classified by a "competent person" as **Stable Rock**, **Type A**, **Type B**, or **Type C**
- The classification must be based on the results of at least one visual and one manual analysis

Stable Rock

- Natural solid mineral matter that can be excavated with vertical sides and remain intact while exposed

Type A Soil

- Most stable
- Fine grained
- Doesn't crumble
- Difficult to break up when dry
- Unconfined Compressive Strength, $q_u \geq 1.5$ tsf
- Cohesive soils - clay, silty clay, sandy clay, clay loam and hardpan
- Not Type A if, fissured; subject to vibration; has previously been disturbed; or has seeping water.

Type B Soil

- Medium stability
- Cohesive soil with Unconfined Compressive Strength,

  $0.5 \text{ tsf} < q_u < 1.5 \text{ tsf}$
- Granular cohesionless soils – angular gravel (similar to crushed rock), silt, silty loam, sandy loam, and unstable dry rock
- Previously disturbed soils unless otherwise classified as Type C.

Type C Soil

- Least stable
- Cohesive soil with Unconfined Compressive Strength $q_u \leq 0.5$ tsf
- Granular soils - gravel, sand, and loamy sand
- Submerged soil or soil from which any water is seeping
- Unstable submerged rock

Layered Geological Strata

- Soil classified on the basis of the weakest soil layer
- Each layer may be classified individually if a more stable layer lies below a less stable layer (i.e. Type C soil rests on top of stable rock)

Visual Tests

- Observe soil as it is being excavated and the sides of the excavation.
- Estimate range of particle sizes and the relative amounts. If predominantly fine-grained (not visible to naked eye), soil is cohesive. If predominantly coarse-grained (visible to naked eye), soil is granular.
- If excavated soil remains in clumps, it is cohesive. Soil that breaks up and doesn't stay in clumps is granular.

Visual Tests

- Look for cracks around excavation and spalling of sides.
- Look for evidence of previously disturbed soil.
- Look for soil layering and the extent to which the layers slope toward the excavation.
- Look for any seepage.
- Look for any sources of vibration that may affect the stability of the excavation. (This is probably applicable to all work in our right-of-way)

Manual Tests

Plasticity or Wet Thread Test

- Moist soil sample molded into a ball
- Roll into a thin thread 1/8” in diameter (thick) by 2” in length.
- Hold thread by one end.
- If the thread does not break or tear, the soil is considered cohesive.

Manual Tests

Dry Strength Test

- Attempt to crumble a sample of dry soil
- Granular: Crumbles freely or with moderate pressure into individual grains
- Clay with gravel, sand, or silt: Falls into clumps that break into smaller clumps which can only be broken with difficulty
- Unfissured : Breaks into clumps (with difficulty) that do not break into smaller clumps

Manual Tests

Thumb Penetration Test

- Press thumb firmly into soil sample
- Type A: Thumb makes an indentation in the soil only with great difficulty
- Type B: Thumb penetrates no further than the length of the thumb nail
- Type C: thumb penetrates full length
- Subjective - least accurate of the three methods

Manual Tests

Other Strength Tests

- Pocket Penetrometer
- Hand-Operated Shearvane (Torvane)
- Both used to estimate unconfined compressive strength of cohesive soils

Determining Type A, B, and C soils (from "CaL/OSHA Pocket Guide for the Construction Industry")

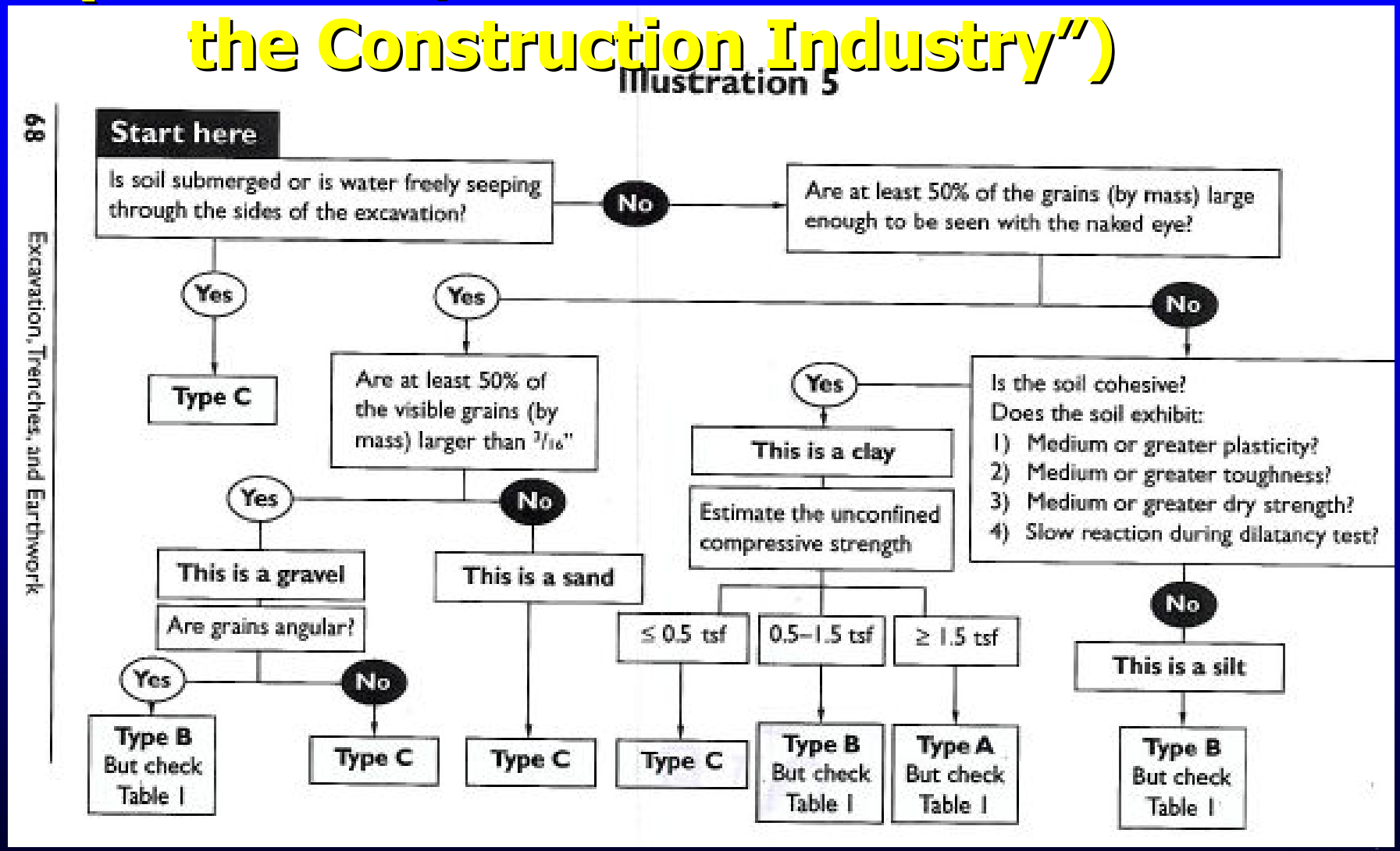

Table 1

Site Conditions That Affect Rock/Soil Slope Stability

Condition	*Requirement*
Soil is fractured/unstable dry rock.	Downgrade to Type B.
Soil is fractured/unstable submerged rock.	Downgrade to Type C.
Soil is cemented (caliche, hardpan, etc.).	Classify as Type A.
Soil is fissured.	Downgrade from Type A to Type B.
Soil is subject to vibration.	Downgrade from Type A to Type B.
Soil has been previously disturbed.	Downgrade from Type A to Type B.
Soil is submerged or water is freely seeping through the sides of the excavation.	Downgrade from Type A to Type C. Downgrade from Type B to Type C.
Soil profile is layered with the layers dipping into the excavation on a slope of four horizontal to one vertical or steeper.	Downgrade from Type A to Type C. Downgrade from Type B to Type C.

Methods of Protection (Protective Systems)

- Sloping or Benching (Appendix B)
- Timber Shoring (Appendix C)
- Aluminum Hydraulic Shoring (Appendix D)
- Trench Shields (Appendix E)
- Engineered Systems

Excavations Made in Type B Soil

Simple Slope

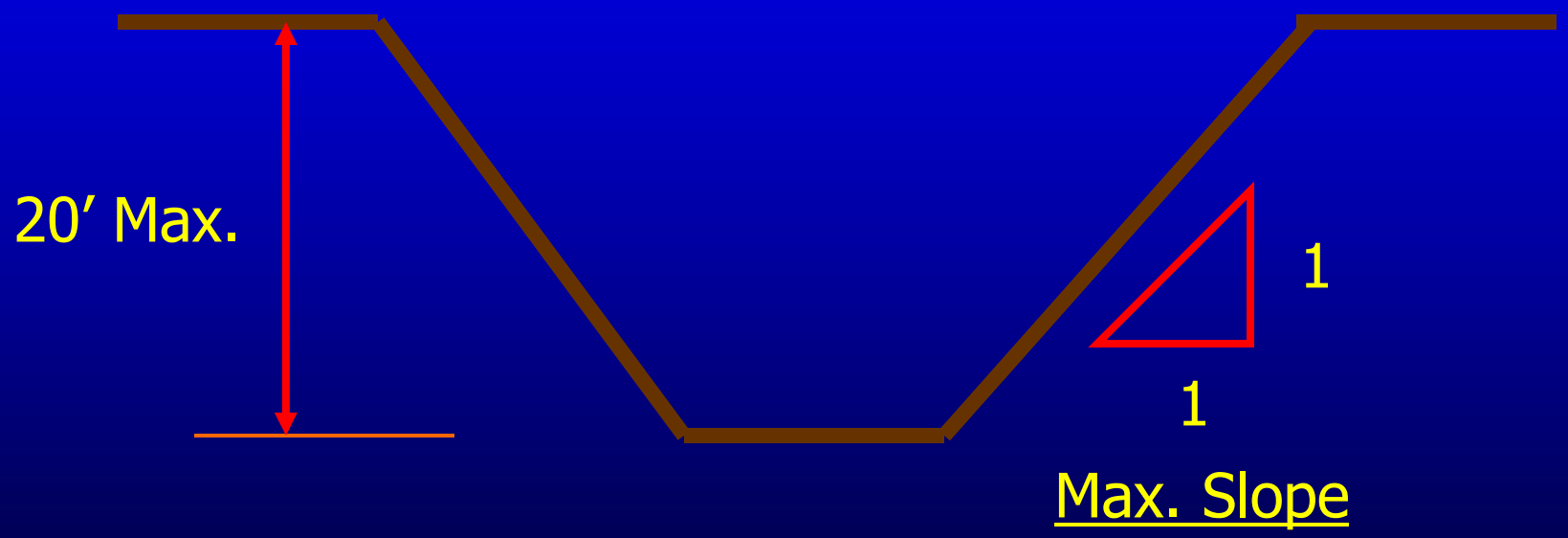

Excavations Made in Type B Soil

Single Bench

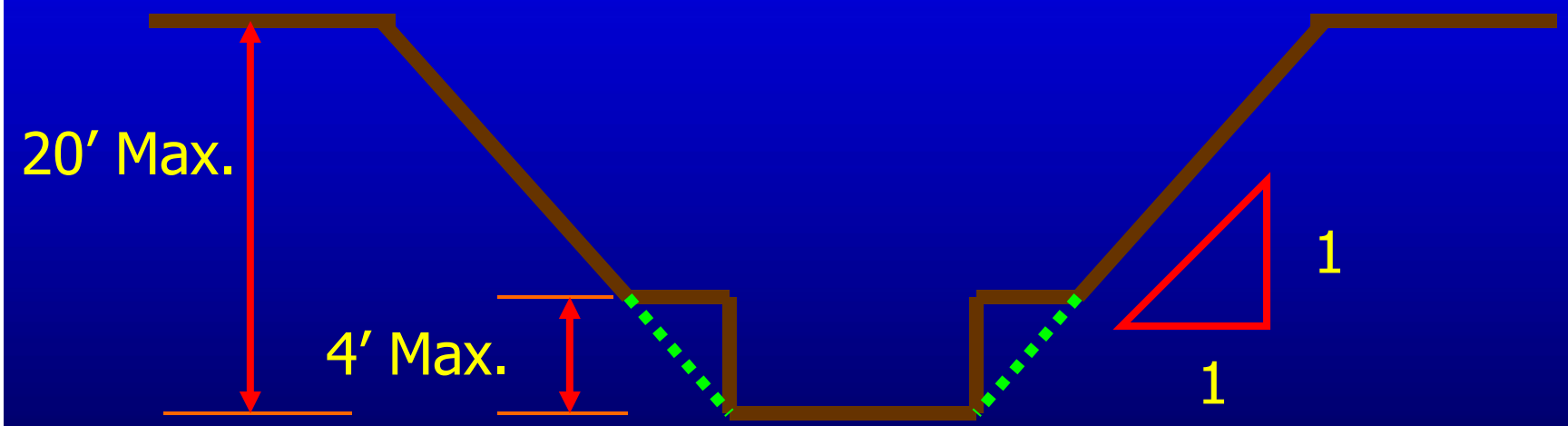

Max. Slope

This bench allowed in cohesive soil only

Excavations Made in Type B Soil

Multiple Bench

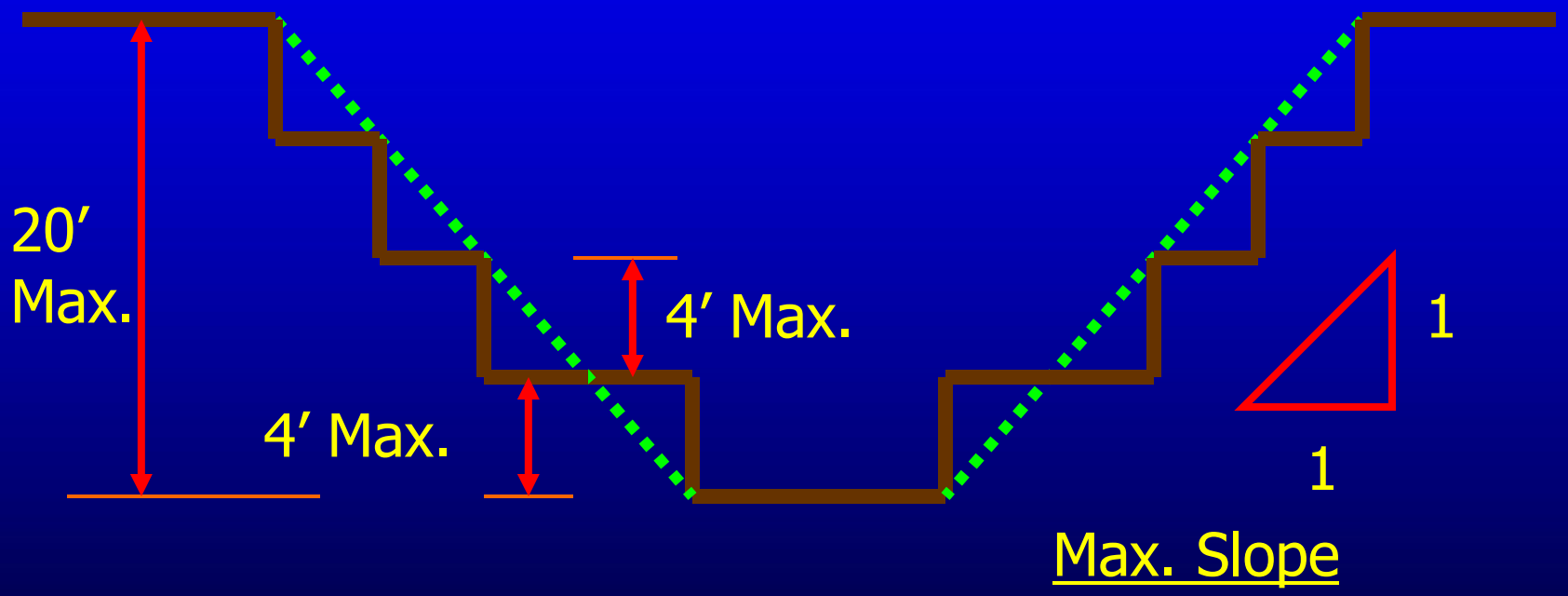

This bench allowed in cohesive soil only

Excavations Made in Type B Soil

Vertically Sided Lower Portion

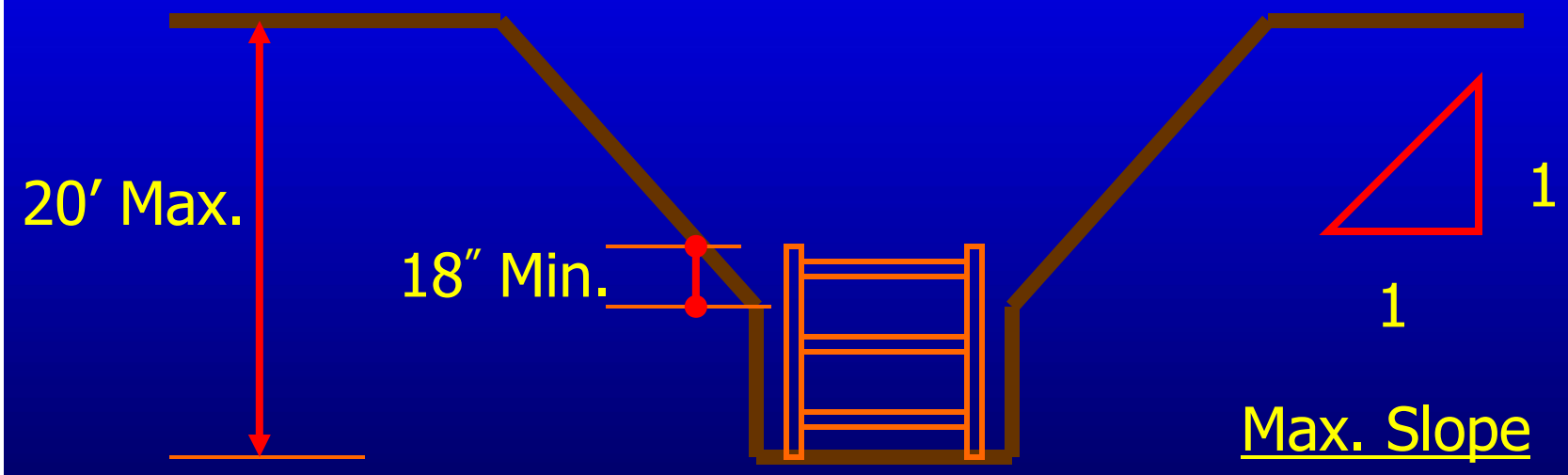

Support or Shield System

Excavations Made in Type C Soil

Simple Slope

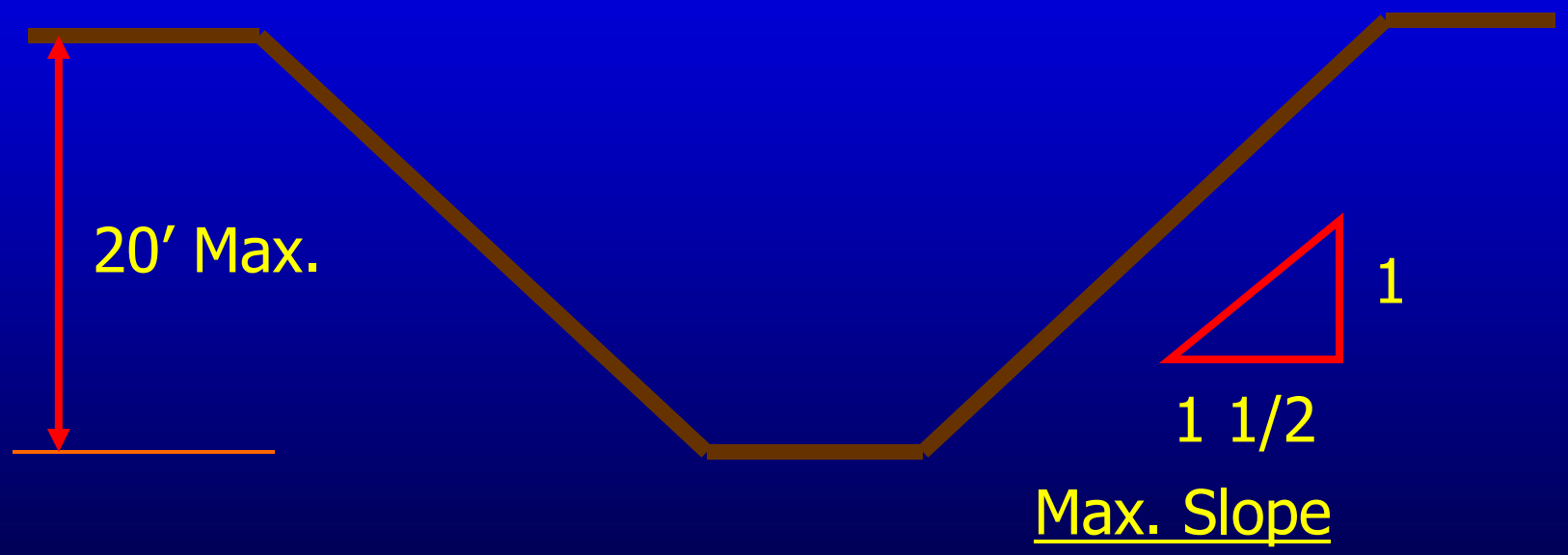

Excavations Made in Type C Soil - Benching

- Benching is NOT allowed in Type C soil
  - Unless approved in writing by a Registered Professional Engineer

Excavations Made in Type C Soil

Vertically Sided Lower Portion

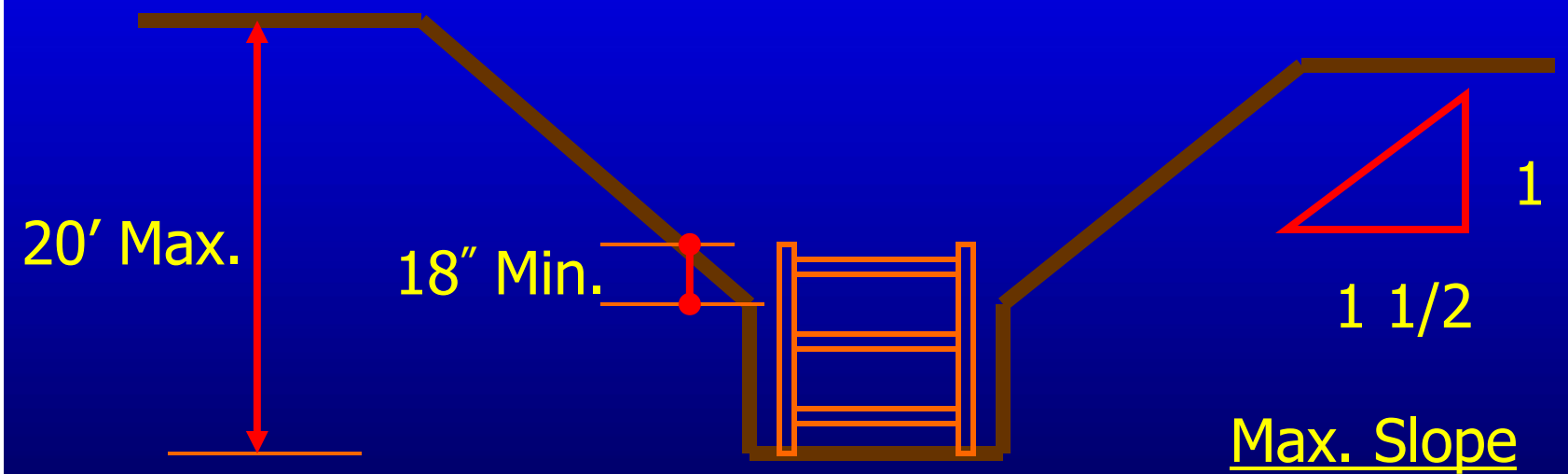

Support or Shield System

Excavation Made in Layered Soils

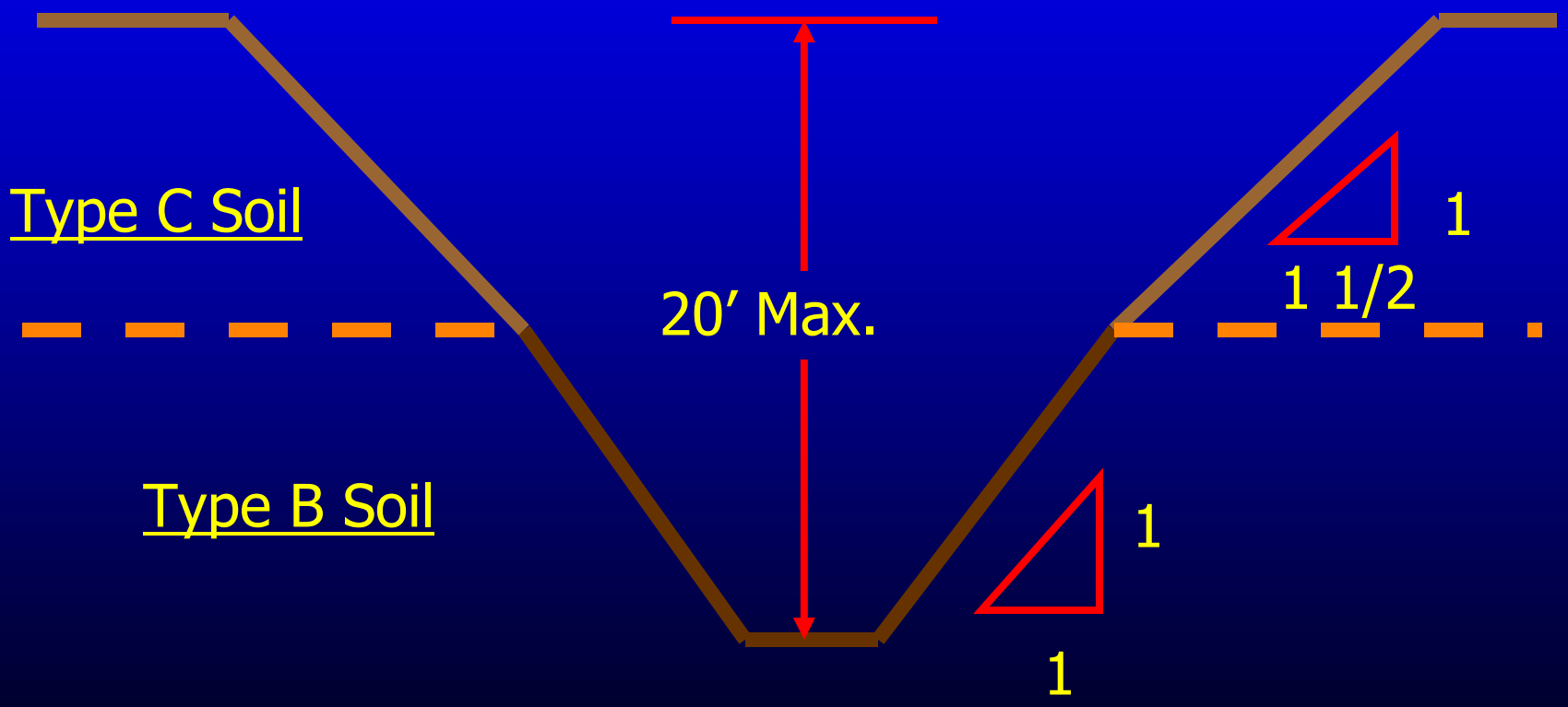

Excavations Made in Layered Soils

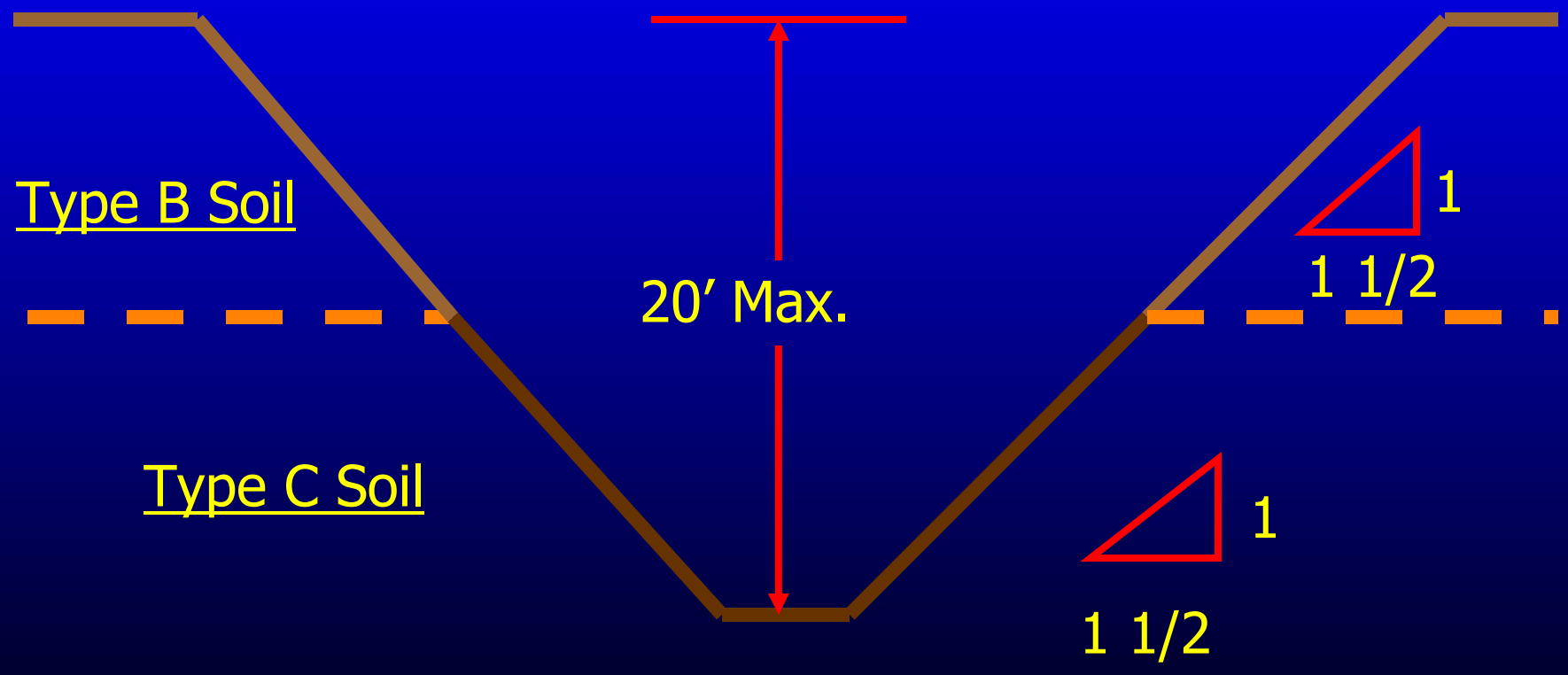

Sloping and Benching (Appendix B)

Soil Type	Height/Depth Ratio	Slope Angle
Stable Rock	Vertical	90°
Type A	¾ :1	53°
Type B	1:1	45°
Type C	1 ½ : 1	34°
Type A (short-term, for a maximum excavation depth of 12 ft)	½ :1	63°

Timber Shoring (Appendix C)

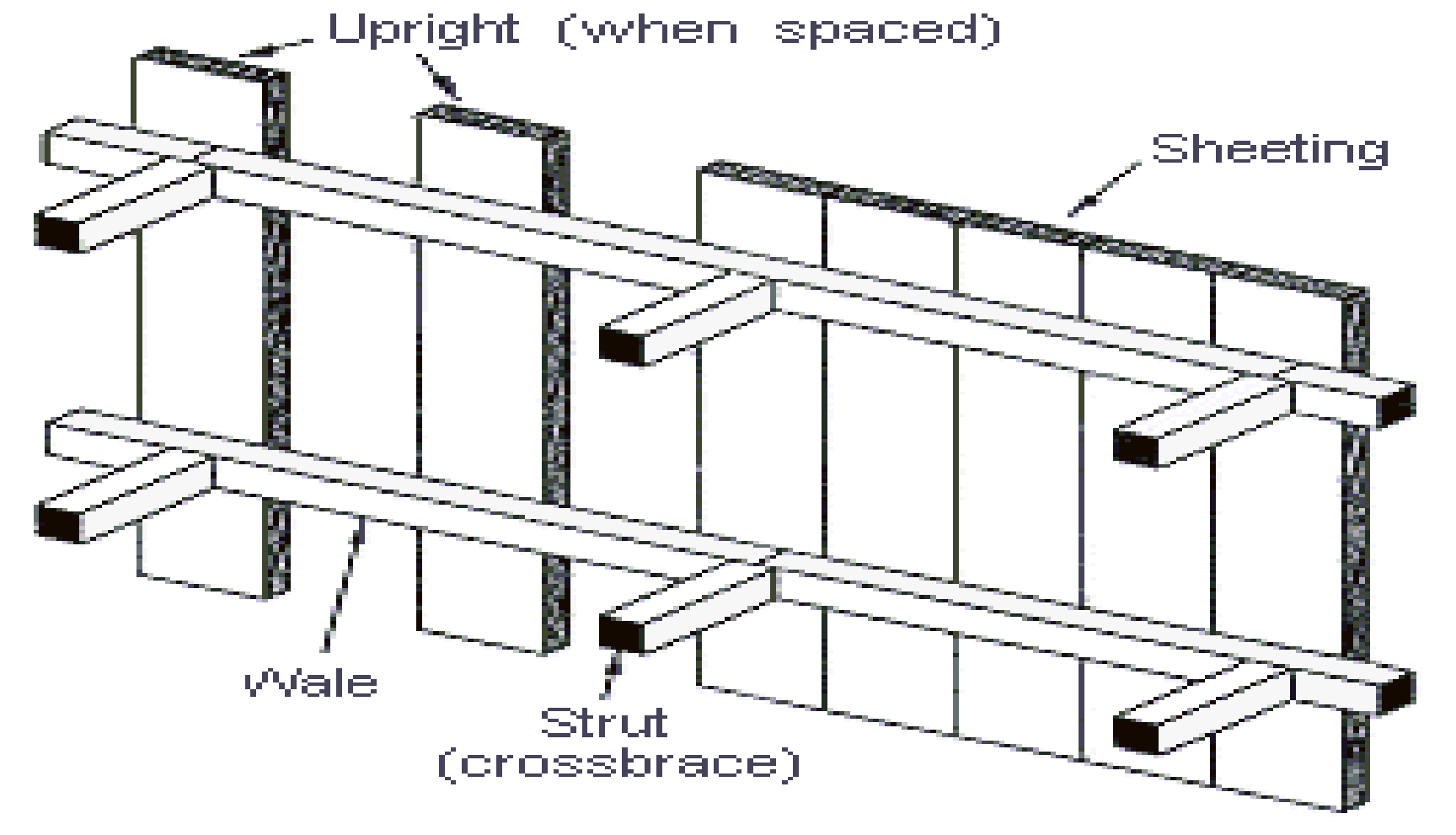

Timber Trench Shoring

Soil Type B

P_a = 45 x H + 72 psf (2 ft. Surcharge)

TABLE C-2.2

BER TRENCH SHORING — MINIMUM TIMBER REQUIREMENTS*

Soil Type B $P_a = 45 \times H + 72$ psf (2 ft. Surcharge)

Depth Of	SIZE (S4S) AND SPACING OF MEMBERS**													
								Wales		Uprights				
	Horizontal						Vertical		Vertical	Maximum Allowable Horizontal Spacing (Feet)				
							Spacing (Feet)	Size (In.)	Spacing (Feet)	Close	2	3	4	6
15 To 20	Up to 6	6x8	6x8	6x8	6x8	8x8	5	8x10	5	4x6				
	Up to 8	6x8	6x8	6x8	8x8	8x8	5	10x12	5	4x6				
	Up to 10	8x8	8x8	8x8	8x8	8x8	5	12x12	5	4x6				
	See Note 1													
Over 20	See Note 1.													

Depth Of	Up To	Up To 12	Up To 15	Size (In.)	Vertical Spacing (Feet)	Close	2	3	4	6
	6	6x6	6x6	6x8	5			3x12-4x8		4x12
	6	6x6	6x6	8x8	5		3x8		4x8	
	6	6x6	6x8	8x10	5			4x8		
	6	6x8	6x8	8x8	5	3x6	4x10			
	8	8x8	8x8	10x10	5	3x6	4x10			
	8	8x8	8x8	10x12	5	3x6	4x10			

* Douglas fir or equivalent with a bending strength not less than 1500 psi.
** Manufactured members of equivalent strength may be substituted for wood.

Aluminum Hydraulic Shoring (Appendix D)

- Aluminum hydraulic shoring is one of the most common used methods of worker protection. It is light-weight, portable and easy to install.
- The manufacturer provides tabulated data with the shoring that provides the limitations, required spacing and proper use.

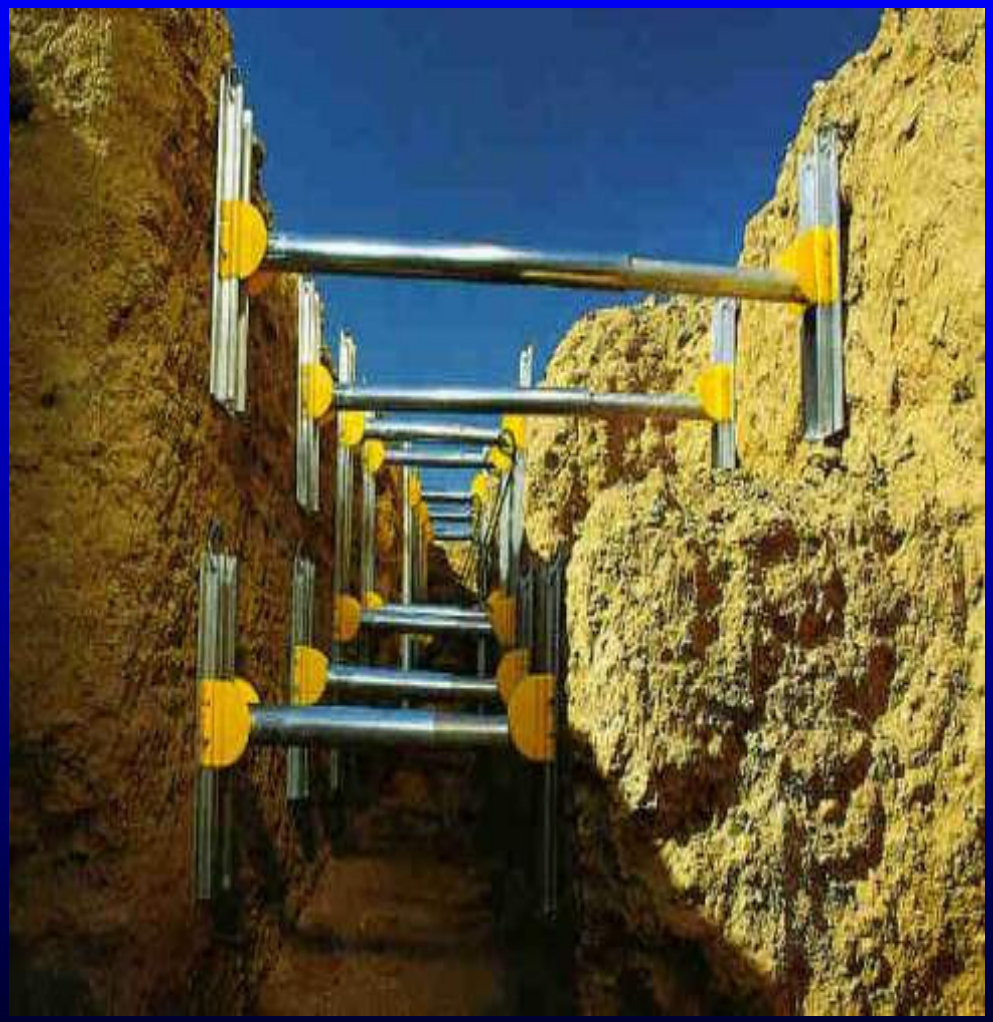

Aluminum Hydraulic Shoring

- Spacing of shores to meet manufacturers specifications
- Maximum depth is 20 ft., unless Registered Professional Engineer allows deeper
- No blocking behind shores
- Must use 3 shores minimum

Aluminum Hydraulic Shoring

Hydraulic Shoring Installation

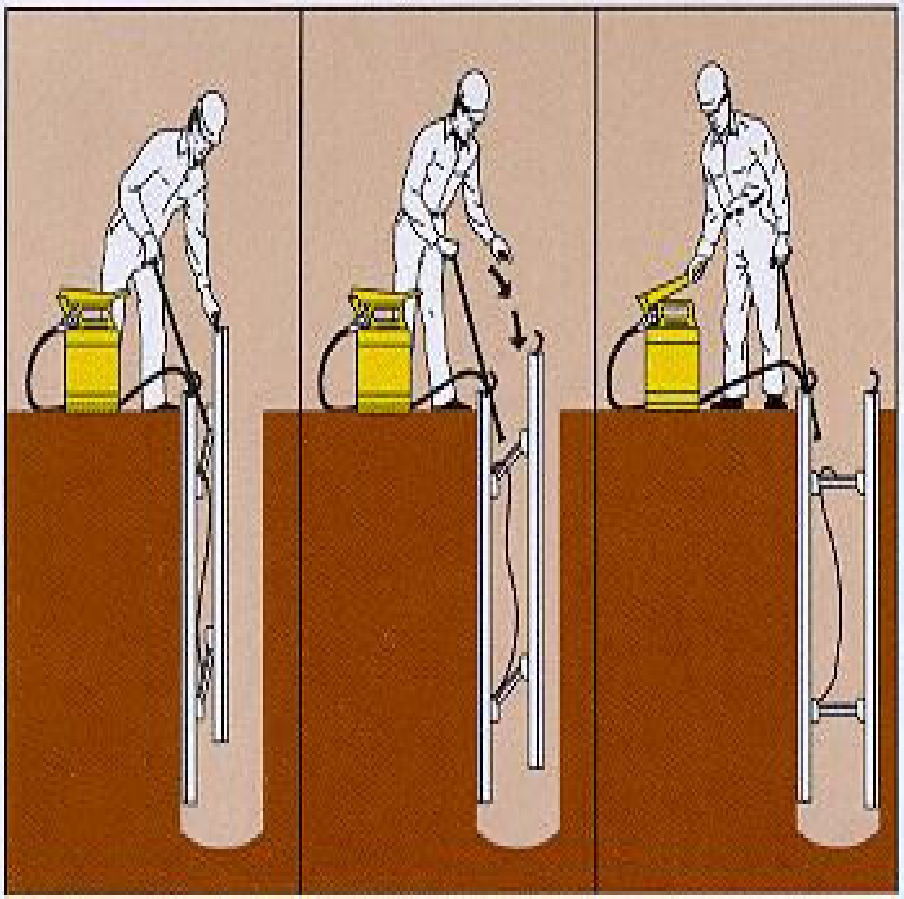

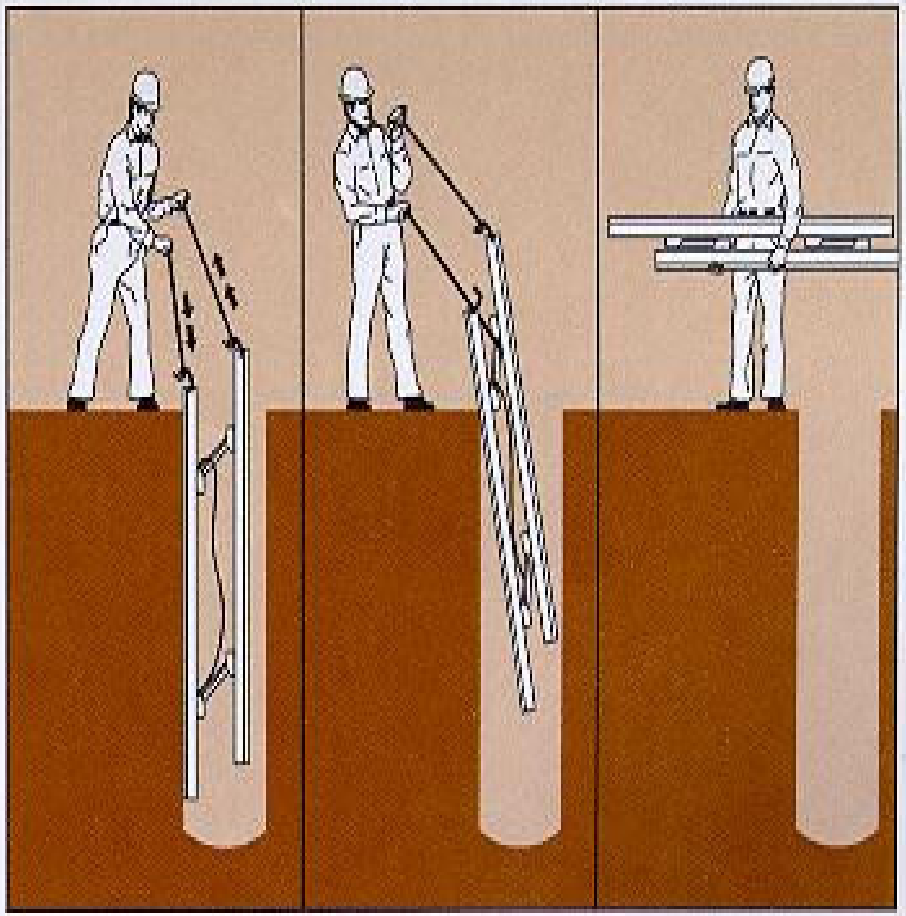

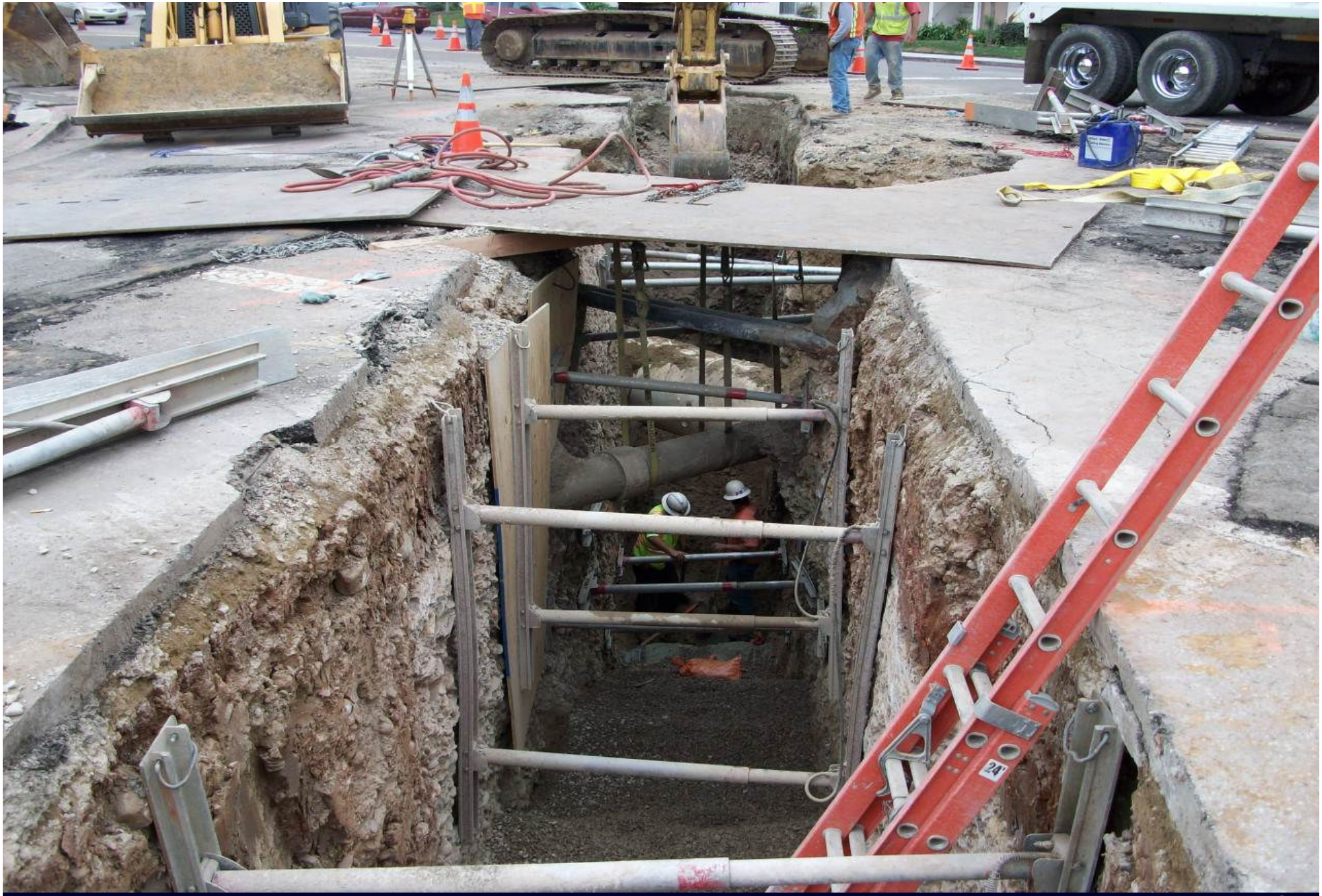

WINTER TRAINING 2010

Shields (Appendix E)

- Shields are manufactured by a number of companies and are designed to protect workers working within the confines of the shield.
- Tabulated data is provided for the maximum allowable depth it can be used. The tabulated data must accompany the shield when it is being used.
- Additionally, the shield must be designed by a Registered Professional Engineer, be in good condition, and used properly.

Shields

This shielding system, commonly called a "trench box" are similar to shields and have the same requirements.

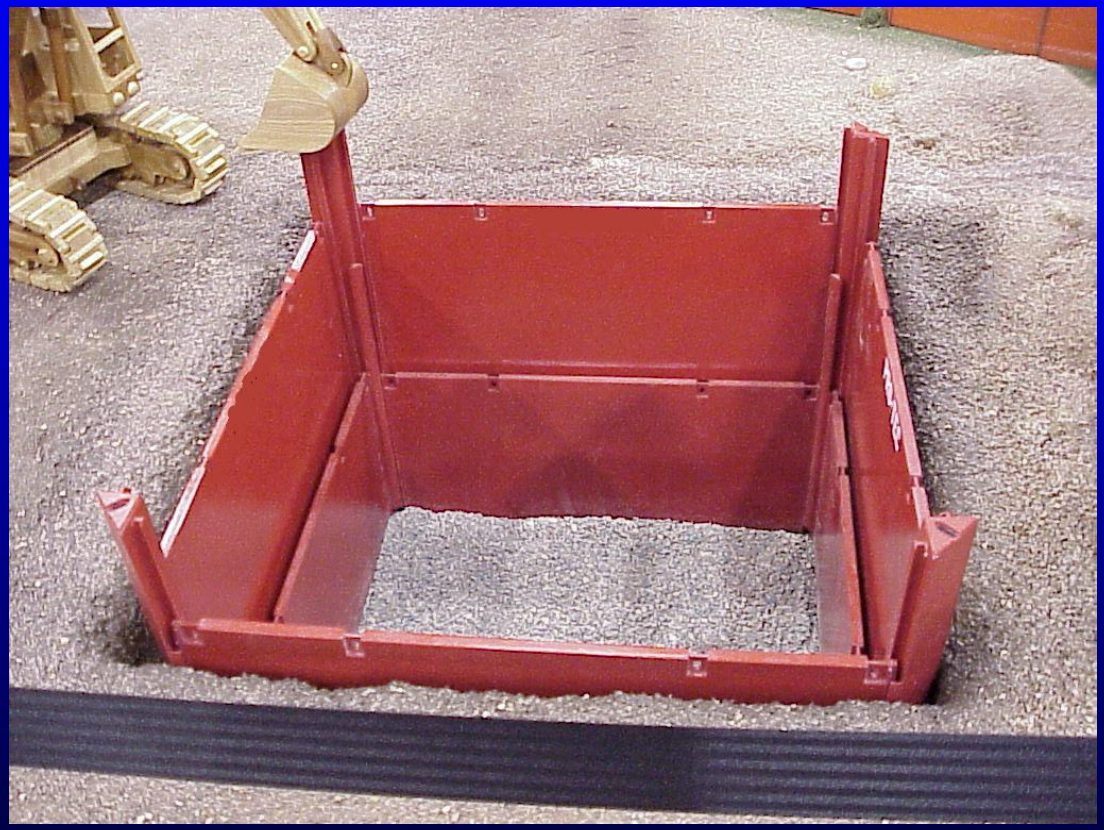

Trench Shields

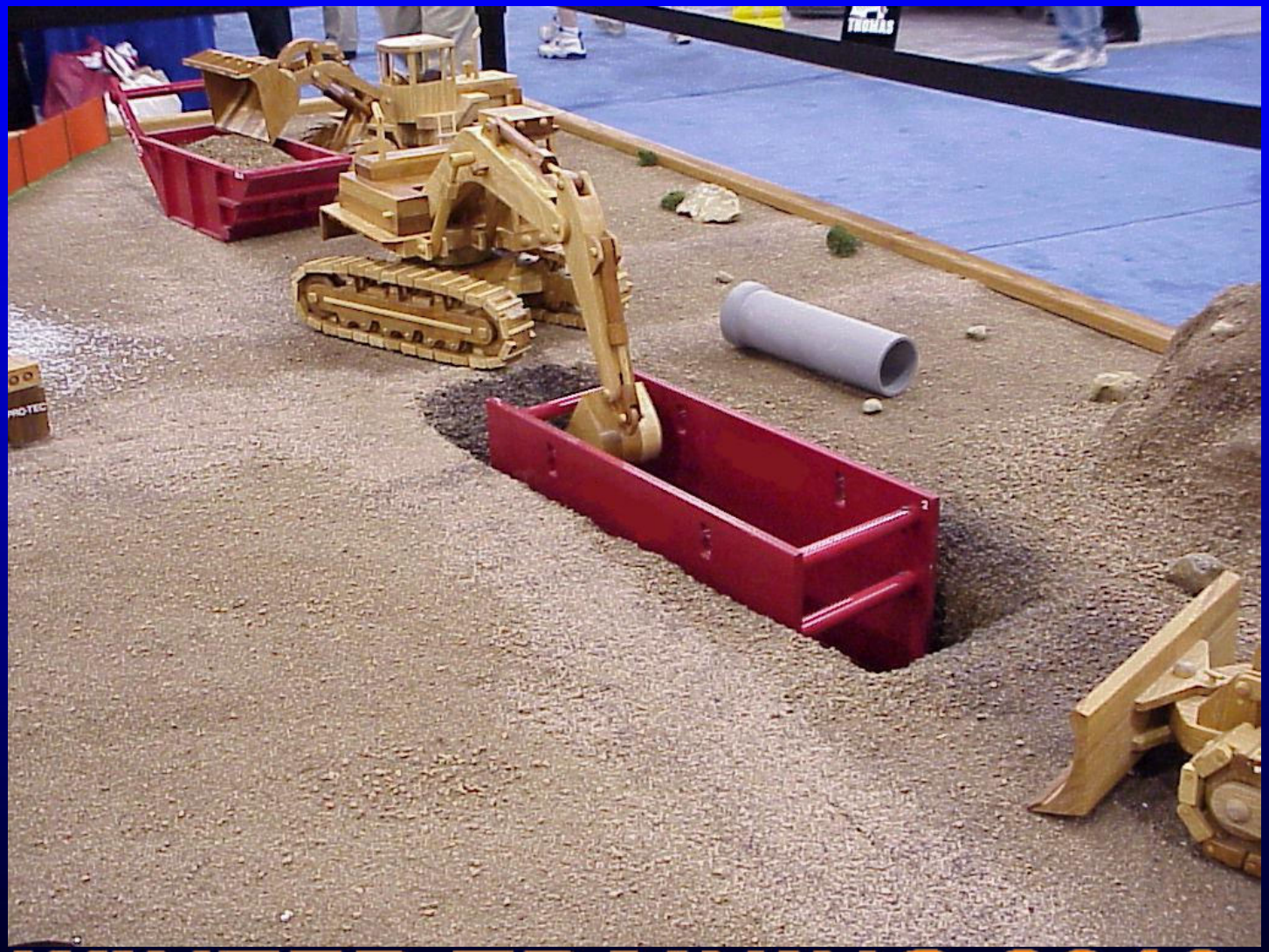

Trench Shields

TRENCH BOXES FROM TRENCH SHORING COMPANY

TRENCH BOXES

— FLEX-SHIELD™
— MANHOLE BOXES
  — RENTAL
  — SALES
  — SERVICE
  — AVAILABILITY
  — ENGINEERING
  — MANUFACTURING

FLEX-SHIELD FEATURES

— Designed to work in conjunction with the excavator to increase production in all types of soil

— Thinner side panels to minimize repaving and restoration costs

— Units available in varying load carrying capacities, heights, widths and lengths to suit user needs

— Meets OSHA requirements

— Can be utilized for pipe laying, jacking pits, setting vaults, retrofit work and many other applications

— The largest inventory in the area

MANHOLE BOX FEATURES

— Units available 8' or 10' square, in varying heights

— Can be used for a variety of applications, including building manholes, emergency repairs and retrieving soil samples, to name a few

TRENCH SHORING COMPANY

"Commitment To Safety & Service"
Since 1973

Caution!

- Contractor may submit a sales brochure as a "shoring plan" for approval
- A brochure is not a plan, and it generally represents the manufacturer's data (the strength or capacity of the product)
- A shoring plan for the specific use of the shield must be prepared

Trench Shield

Tabulated Data

Model No.

Serial No.

Shield Capacity 945 PSF

GME

TRENCH SHIELD MANUFACTURER'S TABULATED DATA

6M824 NKE
MODEL NO.

M08121025
SERIAL NO.

12/30/08
DATE SHIPPED

945 PSF
SHIELD CAPACITY

MAXIMUM DEPTH TABLE

SOIL TYPE	EFP	MAXIMUM DEPTH (FT)
A	25	42'
B	45	25'
C	60	20'
C	80	16'

CONDITIONS FOR USE OF TABULATED DATA:

1. This Tabulated Data has been prepared by a registered professional engineer as required to comply with the OSHA standard 29 CFR Part 1926, Subpart P.

2. The Soil Types A - 25, B - 45, and C - 80 are as defined in the
cohesive soil or a moist
submerged and has an
er foot of depth. The
on for signs of
d produce the Soil Type
, but not limited to, freely
avation around or

ce with the depth chart.
surface of the excavation
own are based upon
oil pressures may vary
oads, and slope of
s should be verified to
ed.

aximum depth table.
quipment , vibrations, or
defined as within a

stability to adjacent

GENERAL NOTES FOR TRENCH SHIELD USE:

1. Any modifications to shields using parts not manufact
will void Tabulated Data unless otherwise specified or all
by GME.

2. GME Trench Shields may be stacked provided that ap
connections are made between stacked shields as speci
stacked shield shall have a depth rating equal to or great
depth at which it is used.

3. Maximum depths are based on shields being in struct
condition. Trench Shields should be inspected prior to es
damage or deterioration. If a shield has sustained major
or permanent deformation of a structural member or con
Tabulated Data is void until repairs are made as specifie
professional engineer.

4. The use of GME Trench Shields shall be in accorda
data and all requirements of the OSHA standard. Trench
than specified or required may create unsafe conditions
cave - in, structural failure, or collapse resulting in a disa
death. GME shall not be liable for shield usage other than specified.

STATE OF MICHIGAN
TIMOTHY S. DEY
ENGINEER
No. 43602
LICENSED PROFESSIONAL ENGINEER

Griswold Machine & Engineering, Inc.
594 W. Highway M - 60
Union City, MI 49094
Phone 517 - 741 - 4300

MAXIMUM DEPTH TABLE

SOIL TYPE	EFP	MAXIMUM DEPTH (FT)
A	25	42'
B	45	25'
C	60	20'
C	80	16'

Tabulated Data

TRENCH SH
TA

6M824 NKE
MODEL NO.

M08121025
SERIAL NO.

12/30/08
DATE SHIPPED

MAXIMUM DEPTH TABLE

SOIL TYPE	EFP	MAXIM
A	25	
B	4	
C	60	

PSF
SHIELD CAPACITY

20 FT

CONDITIONS FOR USE OF TABULATED DATA:

1. This Tabulated Data has been prepared by a registered professional engineer as required to comply with the OSHA standard 29 CFR Part 1926, Subpart P.

2. The Soil Types A - 25, B - 45, and C - 60 are as defined in the OSHA Standard. Soil Type C - 60 is a moist, cohesive soil or a moist dense granular soil, which is not flowing or submerged and has an Equivalent Fluid Pressure (EFP) of 60 PSF per foot of depth. The competent person must monitor the excavation for signs of deterioration that may alter soil pressures and produce the Soil Type C - 60 condition. Such signs are indicated by, but not limited to, freely seeping water or flowing soil entering the excavation around or below the shield.

3. Trench Shields shall be used in accordance with the depth chart. The maximum depth is the distance from the surface of the excavation to the bottom of the trench. Depth ratings shown are based upon examples of homogeneous soil conditions. Soil pressures may vary due to non - homogeneous soils, surcharge loads, and slope of embankment (layback). Actual soil pressures should be verified to be sure that the shield capacity is not exceeded.

4. Surcharge loads are not included in the maximum depth table. Surcharge loads are possible due to heavy equipment , vibrations, or soil piles adjacent to the trench. (Adjacent is defined as within a distance equal to the depth of the trench.)

5. Trench Shields are not intended to provide stability to adjacent buildings or other structures.

6. 2 inch diameter pins furnished by GME shall be placed in all spreader to collar connections.

WARNING!
Use of this equipment not in accordance with Manufacturers Tabulated Data may lead to injury or death.

©2005 Griswold Machine & Engineering, Inc.

Griswold Machine & Engineering, Inc.
594 W. Highway M - 60
Union City, MI 49094
Phone 517 - 741 - 4300

CONDITIONS FOR USE OF TABULATED DATA:

3. Trench Shields shall be used in accordance with the depth chart. The maximum depth is the distance from the surface of the excavation to the bottom of the trench. Depth ratings shown are based upon examples of homogeneous soil conditions. Soil pressures may vary due to non - homogeneous soils, surcharge loads, and slope of embankment (layback). Actual soil pressures should be verified to be sure that the shield capacity is not exceeded.

4. Surcharge loads are not included in the maximum depth table. Surcharge loads are possible due to heavy equipment , vibrations, or soil piles adjacent to the trench. (Adjacent is defined as within a distance equal to the depth of the trench.)

Tabulated Data

GENERAL NOTES FOR TRENCH SHIELD USE:

1. Any modifications to shields using parts not manufactured by GME will void Tabulated Data unless otherwise specified or allowed in writing by GME.

2. GME Trench Shields may be stacked provided that appropriate connections are made between stacked shields as specified by GME. Each stacked shield shall have a depth rating equal to or greater than the actual depth at which it is used.

3. Maximum depths are based on shields being in structurally sound condition. Trench Shields should be inspected prior to each use for any damage or deterioration. If a shield has sustained major structural damage or permanent deformation of a structural member or connection, the Tabulated Data is void until repairs are made as specified by a registered professional engineer.

4. The use of GME Trench Shields shall be in accordance with this tabulated data and all requirements of the OSHA standard. Trench Shield usage other than specified or required may create unsafe conditions that could cause a cave - in, structural failure, or collapse resulting in a disabling injury or even death. GME shall not be liable for shield usage other than specified.

GME

TRENCH SHIELD MANUFACTURER'S TABULATED DATA

UM DEPTH TABLE

E	EFP	MAXIMUM DEPTH (FT)
	25	42'
	45	25'
	60	20'
	80	16'

945 PSF
SHIELD CAPACITY

20 FT
MAX SPREADER LENGTH

8 IN SCH 80
SPREADER SIZE

GENERAL NOTES FOR TRENCH SHIELD USE:

1. Any modifications to shields using parts not manufactured by GME will void Tabulated Data unless otherwise specified or allowed in writing by GME.

2. GME Trench Shields may be stacked provided that appropriate connections are made between stacked shields as specified by GME. Each stacked shield shall have a depth rating equal to or greater than the actual depth at which it is used.

3. Maximum depths are based on shields being in structurally sound condition. Trench Shields should be inspected prior to each use for any damage or deterioration. If a shield has sustained major structural damage or permanent deformation of a structural member or connection, the Tabulated Data is void until repairs are made as specified by a registered professional engineer.

4. The use of GME Trench Shields shall be in accordance with this tabulated data and all requirements of the OSHA standard. Trench Shield usage other than specified or required may create unsafe conditions that could cause a cave - in, structural failure, or collapse resulting in a disabling injury or even death. GME shall not be liable for shield usage other than specified.

STATE OF MICHIGAN
TIMOTHY S. DEY
ENGINEER
LICENSED PROFESSIONAL ENGINEER

GME
Griswold Machine & Engineering, Inc.
594 W. Highway M - 60
Union City, MI 49094
Phone 517 - 741 - 4300

Can Trench Shields be Stacked?

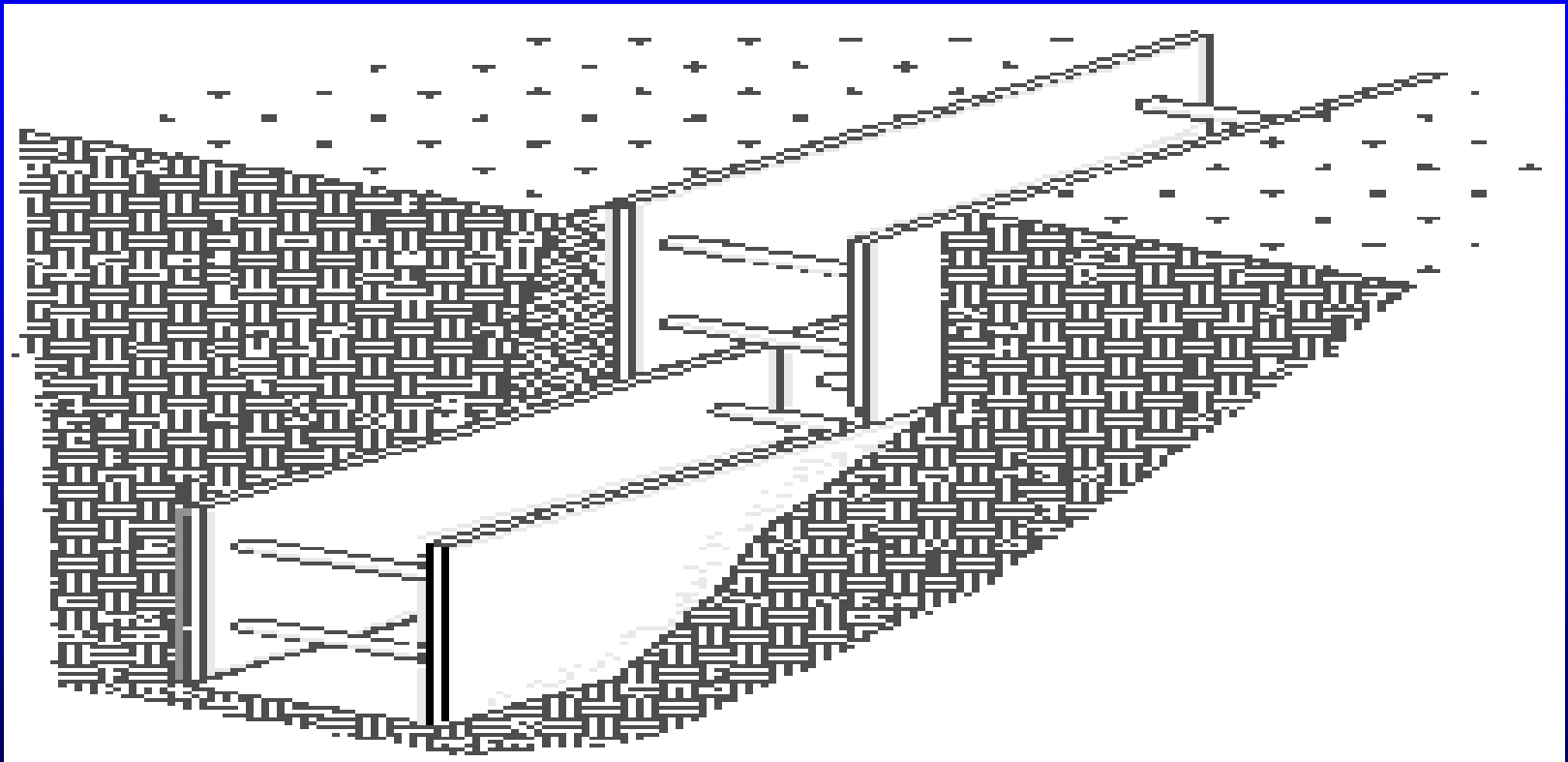

- **YES! If the trench shields are designed to be stacked and are used in accordance with their tabulated data.**

Professional Engineer Designed or "Engineered System"

Important!

Be sure the Contractor is following the approved Plan.

Planned

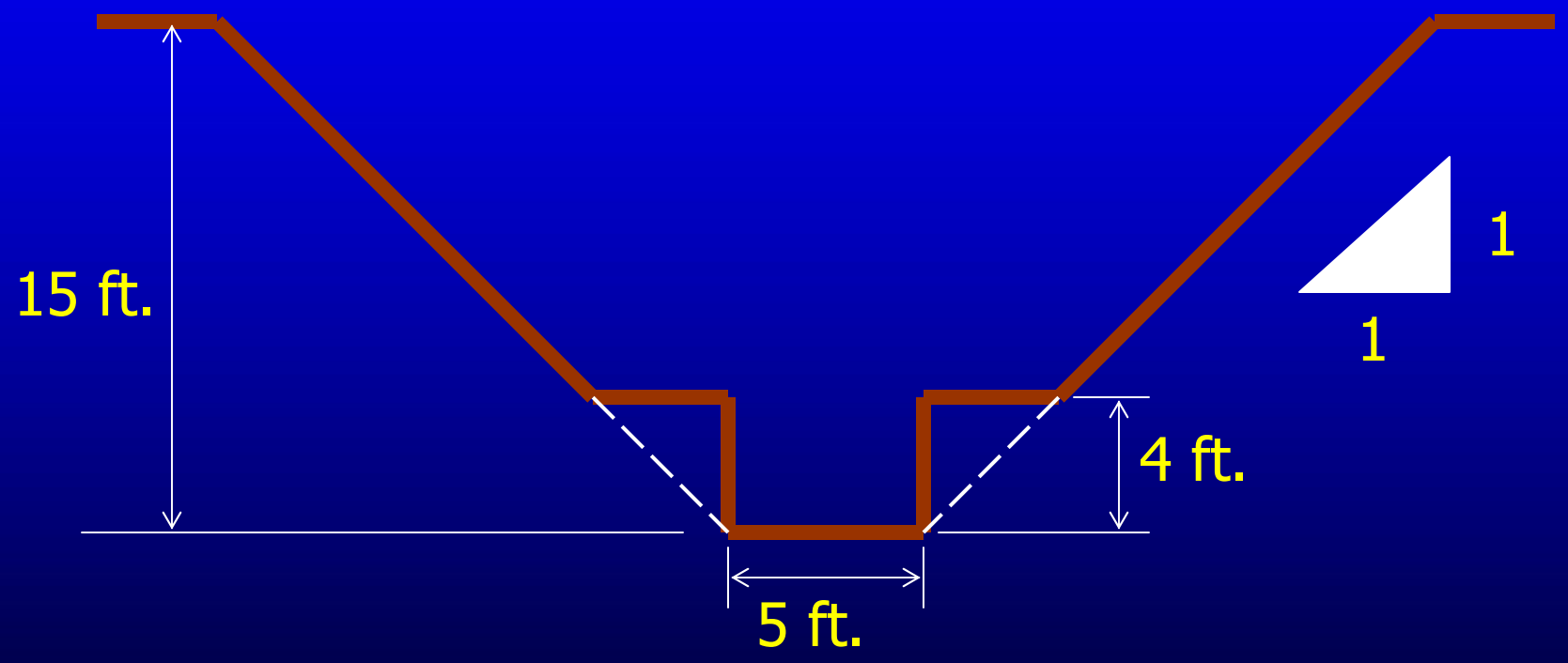

Single Bench in Type B Cohesive Soil

What was Excavated

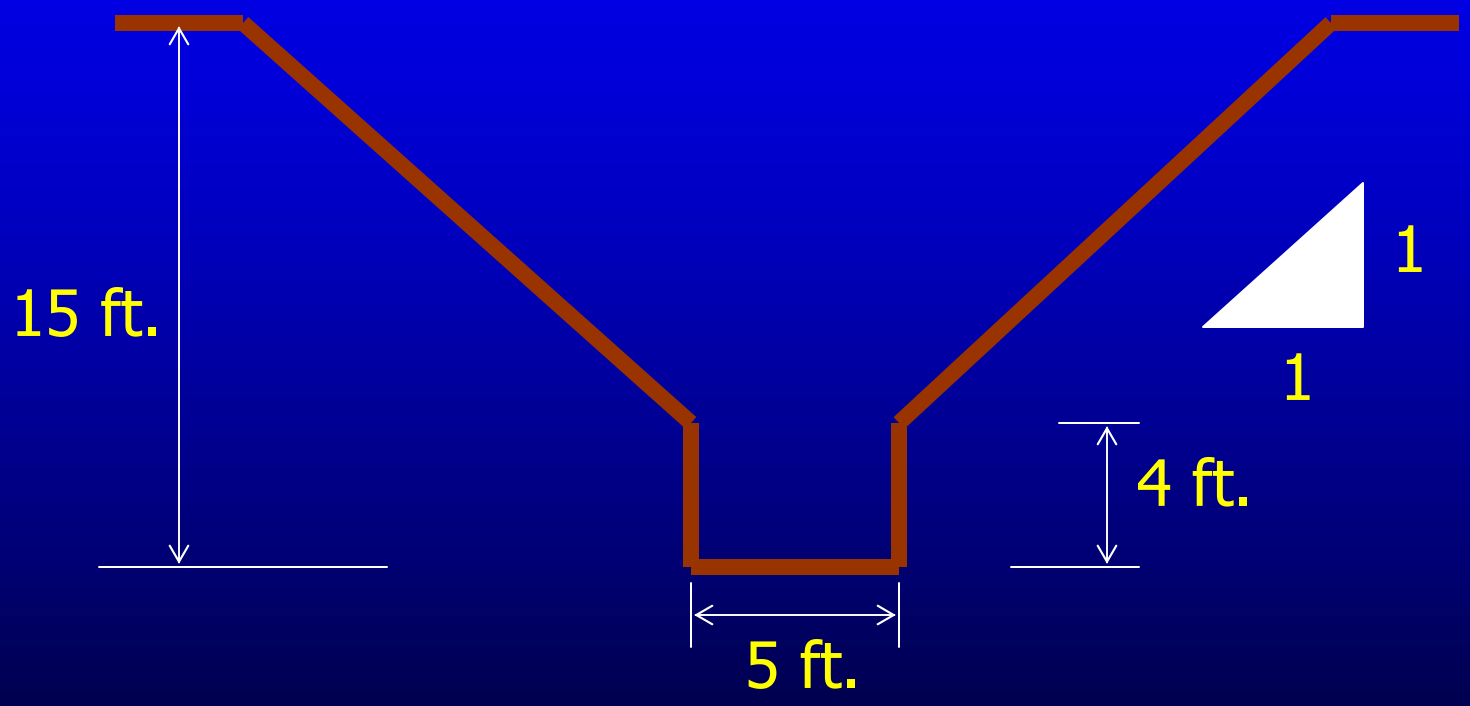

Follow the Approved Plan!

Soil Classification Example (Classified as Type A)

Soil Classification Example (Classified as Type A)

Road Side of Trench

Soil Classification Example (Classified as Type A)

Road Side of Trench

Soil Classification Example (Classified as Type A)

Road Side of Trench

Soil Classification Example (Classified as Type A)

Soil Classification Example

- The competent person in the previous pictures stated the soil was Type A, yet the soil was
  - Previously disturbed
  - Fissured (Tension Crack)
  - Had vibration present
- With these disqualifiers, the soil should have been classified as Type B

Soil Classification Example

- Even if it was Type A, the vertical slope should have been ¾ to 1 and not vertical
- Spoil pile should have been removed
  - At least 2 feet from the edge

Some Important Items to Check When Reviewing Excavation Work and Approving Shoring Plans

- Was the protection plan submitted in a timely manner prior to starting work on the excavation to allow time for review and modification if needed?
- Has the plan been approved?
- Review the CSO prior to the Contractor starting excavation.
- Shoring material should be at the job site before starting excavation.
- Has all possible underground utilities been located prior to excavation?

- Has the Contractor designated who will be in charge of the work and who will be the designated competent person?
- Is there adequate access and egress for the excavation?
- Is the Contractor's competent person performing daily inspections of the excavation prior to the start of the work?
- Does the shoring being installed or excavation slope angle conform to the approved plans?

- The 5 foot depth for the shoring plan requirements is measured from the ground surface at the time of excavation to the bottom of the excavation and not to an elevated work area such as the top of an installed pipe.
- Surcharge loads and vibrations from traffic or equipment must be considered in the shoring plan if CSO Standard Details are used.
- Shoring should be removed progressively as backfill is placed and prior to backfilling if workers are to be in the excavation.
- Good shoring design will not require removal of any part of the shoring system to install a pipe or to perform other work.

Summary

- Definitions
- Excavations 20 ft. deep or less
- Excavations over 20 ft. deep or deviations
- Important Requirements
- Competent Person Responsibilities
- Soil Classification (Appendix A) – Bob Price
- Basis of Soil Classification (Appendix A) – Bob Price
- Visual Tests (Appendix A) - Bob Price
- Manual Tests (Appendix A) – Bob Price
- Methods of Protection
- Case Studies
- Important items to check when reviewing excavation work and approving shoring plans

Questions?

Break!!

Soil Classification and Properties

Instructor: Robert (Bob) Price, PE

(916) 227-7091

WINTER TRAINING 2010

Soil Classification and Properties

- Existing Subsurface Information
- Identifying soils to be excavated
- Engineering properties of soils

Existing Subsurface Information

- Geotechnical Design Report (GDR)
- Boring Record (BR)

- Foundation Report (FR)
- Log of Test Borings (LOTBs)

- Both the these reports will include the author's phone number. **We are here to assist you. Please call us.**

If the soils in the excavation don't match the soils on the boring logs…

Consequences:

- Claims
- Delays
- Shallower or deeper foundations
- Failure of the shoring system resulting in property damage, injury or death

Log of Test Boring

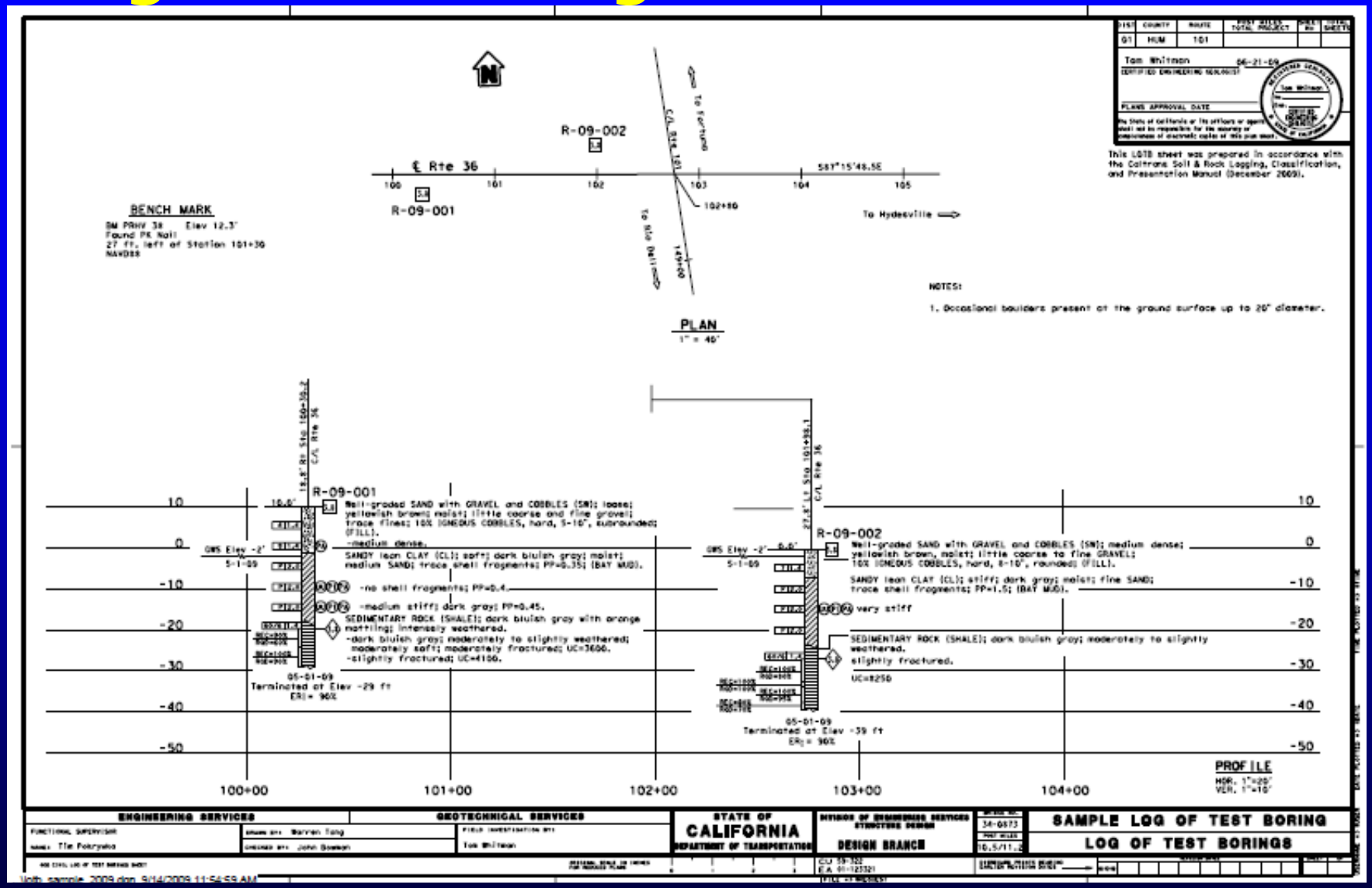

Boring Location

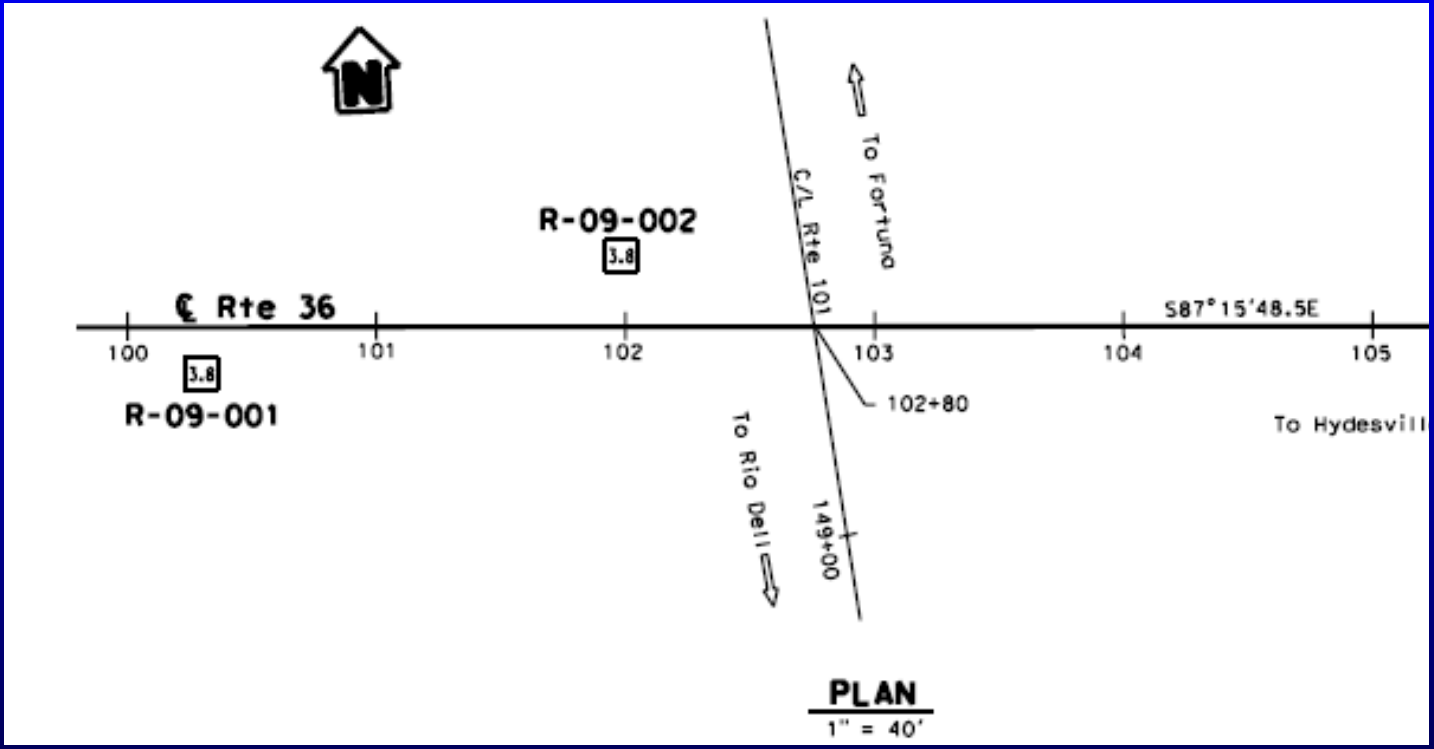

What does all this mean ?

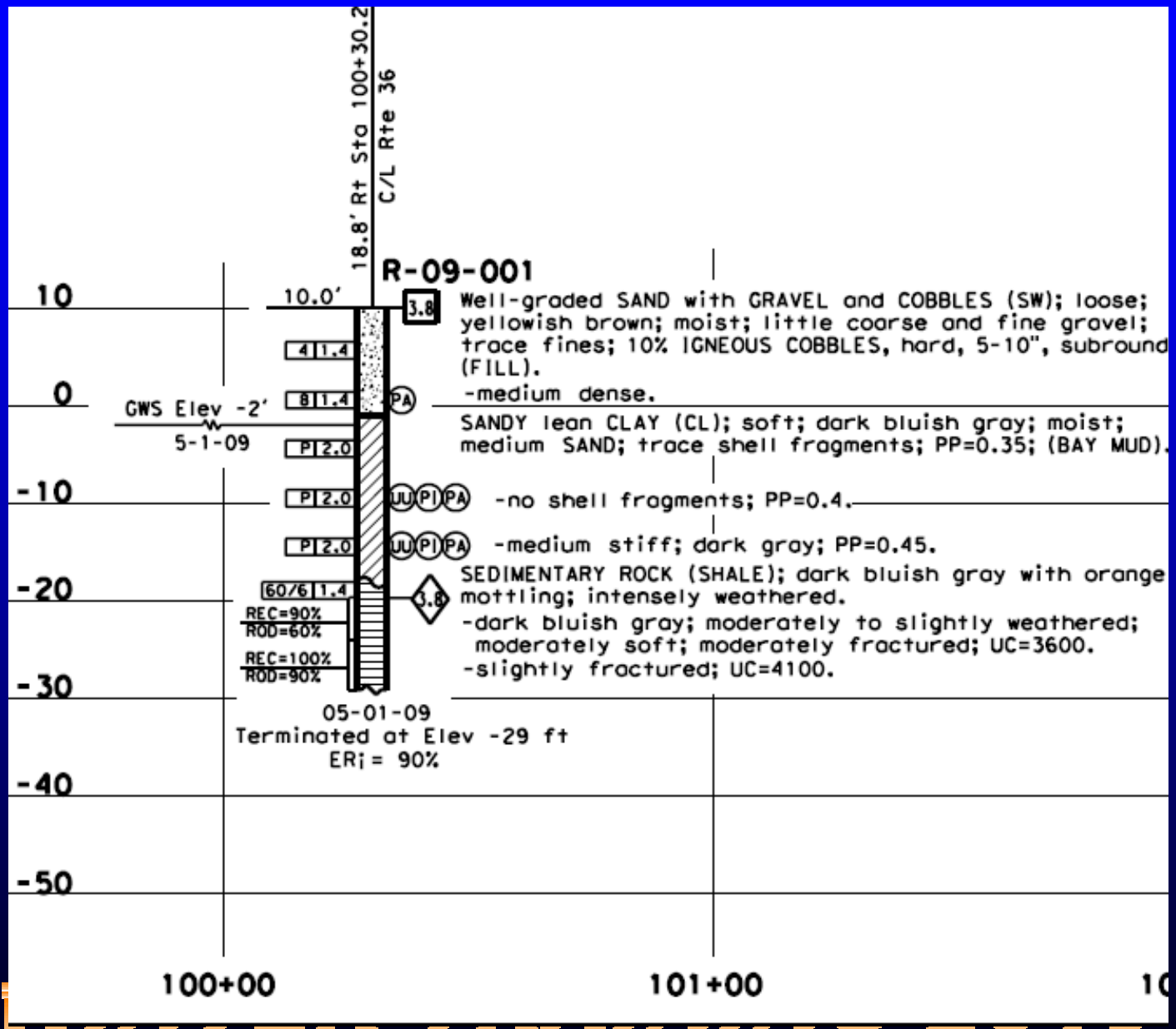

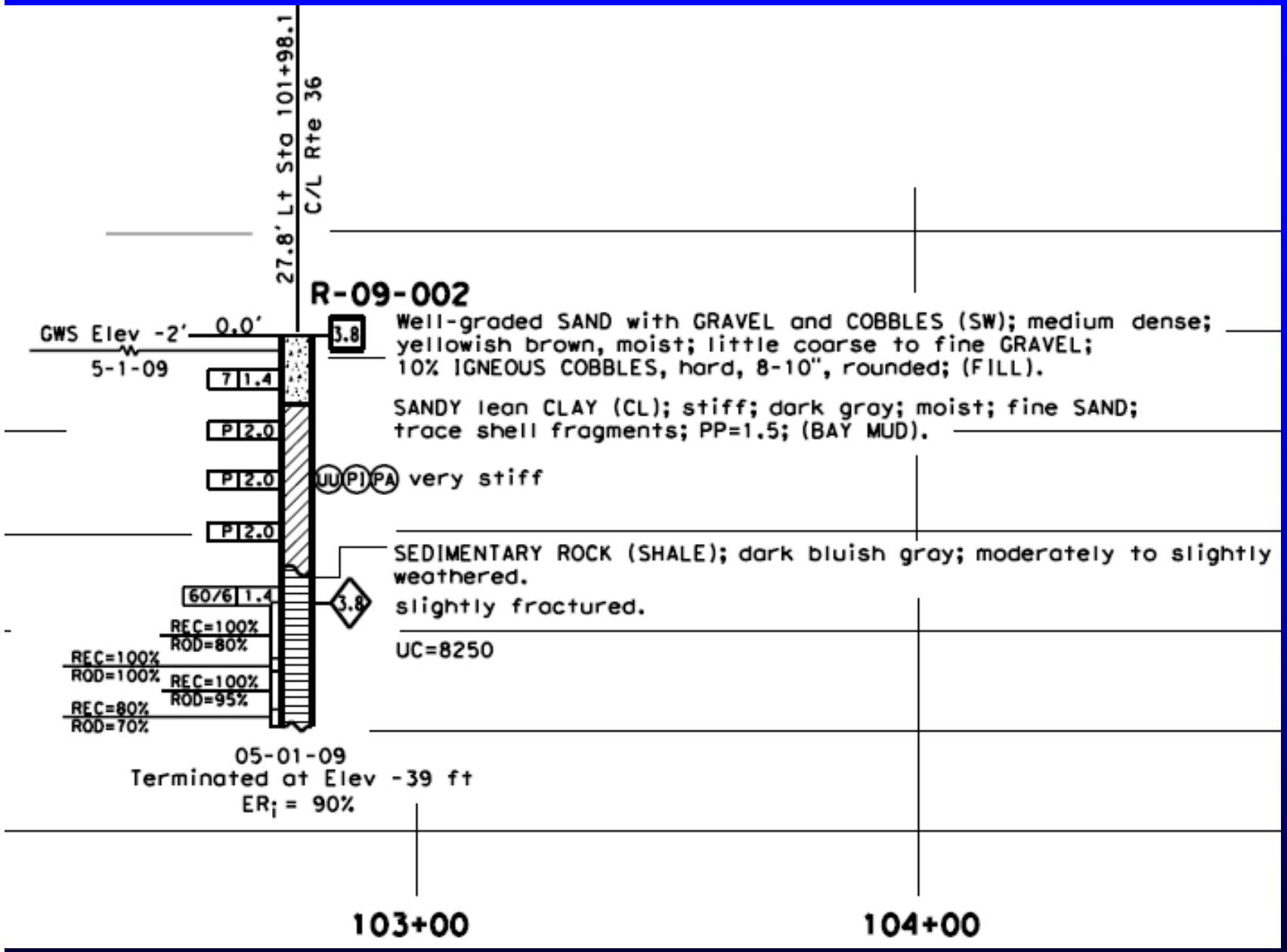
27.8' Lt Sta 101+98.1
C/L Rte 36
R-09-002
GWS Elev -2'
5-1-09
0.0'
3.8
Well-graded SAND with GRAVEL and COBBLES (SW); medium dense; yellowish brown, moist; little coarse to fine GRAVEL; 10% IGNEOUS COBBLES, hard, 8-10", rounded; (FILL).
7 1.4
SANDY lean CLAY (CL); stiff; dark gray; moist; fine SAND; trace shell fragments; PP=1.5; (BAY MUD).
P 2.0
P 2.0
UU PI PA very stiff
P 2.0
SEDIMENTARY ROCK (SHALE); dark bluish gray; moderately to slightly weathered.
60/6 1.4
3.8
slightly fractured.
REC=100% ROD=80%
UC=8250
REC=100% ROD=100%
REC=100% ROD=95%
REC=80% ROD=70%
05-01-09
Terminated at Elev -39 ft
ERi = 90%
103+00
104+00

Soil Legend Sheet (1 of 2)

REFERENCE: CALTRANS SOIL & ROCK LOGGING, CLASSIFICATION, AND PRESENTATION MANUAL (DECEMBER 2009)

DIST	COUNTY	ROUTE	POST MILES TOTAL PROJECT	SHEET No.	TOTAL SHEETS

REGISTERED CIVIL ENGINEER DATE

PLANS APPROVAL DATE

CEMENTATION

Description	Criteria
Weak	Crumbles or breaks with handling or little finger pressure.
Moderate	Crumbles or breaks with considerable finger pressure.
Strong	Will not crumble or break with finger pressure.

BOREHOLE IDENTIFICATION

Symbol	Hole Type	Description
	A	Auger Boring (hollow or solid stem bucket)
	R RW RC P	Rotary drilled boring (conventional) Rotary drilled with self-casing wire-line Rotary core with continuously-sampled, self-casing wire-line Rotary percussion boring (air)
	R	Rotary drilled diamond core
	HD HA	Hand driven (1-inch soil tube) Hand Auger
●	D	Dynamic Cone Penetration Boring
▲	CPT	Cone Penetration Test (ASTM D 5778)
	O	Other (note on LOTB)

Note: Size in inches.

CONSISTENCY OF COHESIVE SOILS

Description	Shear Strength (tsf)	Pocket Penetrometer Measurement (tsf)	Torvane Measurement (tsf)
Very Soft	Less than 0.12	Less than 0.25	Less than 0.12
Soft	0.12 - 0.25	0.25 - 0.50	0.12 - 0.25
Medium Stiff	0.25 - 0.50	0.50 - 1.0	0.25 - 0.50
Stiff	0.50 - 1.0	1 - 2	0.50 - 1.0
Very Stiff	1.0 - 2.0	2 - 4	1.0 - 2.0
Hard	Greater than 2.0	Greater than 4.0	Greater than 2.0

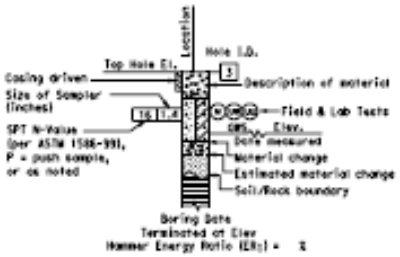

ROTARY BORING

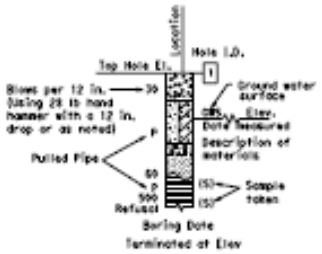

HAND BORING

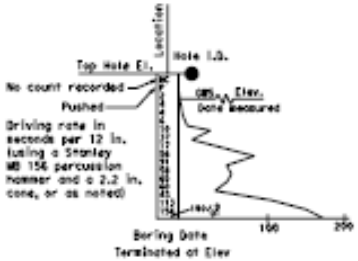

DYNAMIC CONE PENETRATION BORING

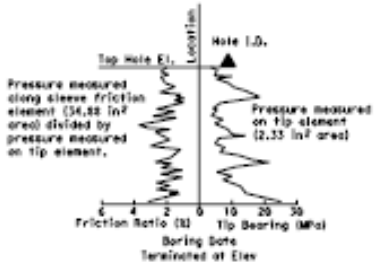

CONE PENETRATION TEST (CPT) SOUNDING

ENGINEERING SERVICES	GEOTECHNICAL SERVICES	STATE OF CALIFORNIA DEPARTMENT OF TRANSPORTATION	DIVISION OF ENGINEERING SERVICES STRUCTURE DESIGN DESIGN BRANCH	Project or Structure Name LOG OF TEST BORINGS
FUNCTIONAL SUPERVISOR	DRAWN BY / CHECKED BY / FIELD INVESTIGATION BY			

legend-soil-lof2.dgn 9/21/2009 7:12:54 PM

Soil Legend Sheet (2 of 2)

REFERENCE: CALTRANS SOIL & ROCK LOGGING, CLASSIFICATION, AND PRESENTATION MANUAL (DECEMBER 2003)

GROUP SYMBOLS AND NAMES

Graphic/Symbol	Group Names
GW	Well-graded GRAVEL Well-graded GRAVEL with SAND
GP	Poorly graded GRAVEL Poorly graded GRAVEL with SAND
GW-GM	Well-graded GRAVEL with SILT Well-graded GRAVEL with SILT and SAND
GW-GC	Well-graded GRAVEL with CLAY (or SILTY CLAY) Well-graded GRAVEL with CLAY and SAND (or SILTY CLAY and SAND)
GP-GM	Poorly graded GRAVEL with SILT Poorly graded GRAVEL with SILT and SAND
GP-GC	Poorly graded GRAVEL with CLAY (or SILTY CLAY) Poorly graded GRAVEL with CLAY and SAND (or SILTY CLAY and SAND)
GM	SILTY GRAVEL SILTY GRAVEL with SAND
GC	CLAYEY GRAVEL CLAYEY GRAVEL with SAND
GC-GM	SILTY, CLAYEY GRAVEL SILTY, CLAYEY GRAVEL with SAND
SW	Well-graded SAND Well-graded SAND with GRAVEL
SP	Poorly graded SAND Poorly graded SAND with GRAVEL
SW-SM	Well-graded SAND with SILT Well-graded SAND with SILT and GRAVEL
SW-SC	Well-graded SAND with CLAY (or SILTY CLAY) Well-graded SAND with CLAY and GRAVEL (or SILTY CLAY and GRAVEL)
SP-SM	Poorly graded SAND with SILT Poorly graded SAND with SILT and GRAVEL
SP-SC	Poorly graded SAND with CLAY (or SILTY CLAY) Poorly graded SAND with CLAY and GRAVEL (or SILTY CLAY and GRAVEL)
SM	SILTY SAND SILTY SAND with GRAVEL
SC	CLAYEY SAND CLAYEY SAND with GRAVEL
SC-SM	SILTY, CLAYEY SAND SILTY, CLAYEY SAND with GRAVEL
PT	PEAT
	COBBLES COBBLES and BOULDERS BOULDERS

Graphic/Symbol	Group Names
CL	Lean CLAY Lean CLAY with SAND Lean CLAY with GRAVEL SANDY lean CLAY SANDY lean CLAY with GRAVEL GRAVELLY lean CLAY GRAVELLY lean CLAY with SAND
CL-ML	SILTY CLAY SILTY CLAY with SAND SILTY CLAY with GRAVEL SANDY SILTY CLAY SANDY SILTY CLAY with GRAVEL GRAVELLY SILTY CLAY GRAVELLY SILTY CLAY with SAND
ML	SILT SILT with SAND SILT with GRAVEL SANDY SILT SANDY SILT with GRAVEL GRAVELLY SILT GRAVELLY SILT with SAND
OL	ORGANIC lean CLAY ORGANIC lean CLAY with SAND ORGANIC lean CLAY with GRAVEL SANDY ORGANIC lean CLAY SANDY ORGANIC lean CLAY with GRAVEL GRAVELLY ORGANIC lean CLAY GRAVELLY ORGANIC lean CLAY with SAND
OL	ORGANIC SILT ORGANIC SILT with SAND ORGANIC SILT with GRAVEL SANDY ORGANIC SILT SANDY ORGANIC SILT with GRAVEL GRAVELLY ORGANIC SILT GRAVELLY ORGANIC SILT with SAND
CH	Fat CLAY Fat CLAY with SAND Fat CLAY with GRAVEL SANDY fat CLAY SANDY fat CLAY with GRAVEL GRAVELLY fat CLAY GRAVELLY fat CLAY with SAND
MH	Elastic SILT Elastic SILT with SAND Elastic SILT with GRAVEL SANDY elastic SILT SANDY elastic SILT with GRAVEL GRAVELLY elastic SILT GRAVELLY elastic SILT with SAND
OH	ORGANIC fat CLAY ORGANIC fat CLAY with SAND ORGANIC fat CLAY with GRAVEL SANDY ORGANIC fat CLAY SANDY ORGANIC fat CLAY with GRAVEL GRAVELLY ORGANIC fat CLAY GRAVELLY ORGANIC fat CLAY with SAND
OH	ORGANIC elastic SILT ORGANIC elastic SILT with SAND ORGANIC elastic SILT with GRAVEL SANDY ORGANIC elastic SILT SANDY ORGANIC elastic SILT with GRAVEL GRAVELLY ORGANIC elastic SILT GRAVELLY ORGANIC elastic SILT with SAND
OL/OH	ORGANIC SOIL ORGANIC SOIL with SAND ORGANIC SOIL with GRAVEL SANDY ORGANIC SOIL SANDY ORGANIC SOIL with GRAVEL GRAVELLY ORGANIC SOIL GRAVELLY ORGANIC SOIL with SAND

FIELD AND LABORATORY TESTING

- (C) Consolidation (ASTM D 2435)
- (CL) Collapse Potential (ASTM D 5333)
- (CP) Compaction Curve (CTM 216)
- (CR) Corrosivity Testing (CTM 643, CTM 422, CTM 417)
- (CU) Consolidated Undrained Triaxial (ASTM D 4767)
- (DS) Direct Shear (ASTM D 3080)
- (EI) Expansion Index (ASTM D 4829)
- (M) Moisture Content (ASTM D 2216)
- (OC) Organic Content-% (ASTM D 2974)
- (P) Permeability (CTM 220)
- (PA) Particle Size Analysis (ASTM D 422)
- (PI) Plasticity Index (AASHTO T 90) Liquid Limit (AASHTO T 89)
- (PL) Point Load Index (ASTM D 5731)
- (PM) Pressure Meter
- (R) R-Value (CTM 301)
- (SE) Sand Equivalent (CTM 217)
- (SG) Specific Gravity (AASHTO T 100)
- (SL) Shrinkage Limit (ASTM D 427)
- (SW) Swell Potential (ASTM D 4546)
- (UC) Unconfined Compression-Soil (ASTM D 2166) Unconfined Compression-Rock (ASTM D 2938)
- (UU) Unconsolidated Undrained Triaxial (ASTM D 2850)
- (UW) Unit Weight (ASTM D 4767)
- (VS) Vane Shear (AASHTO T 223)

DIST	COUNTY	ROUTE	POST MILES TOTAL PROJECT	SHEET No.	TOTAL SHEETS

REGISTERED CIVIL ENGINEER DATE

PLANS APPROVAL DATE

APPARENT DENSITY OF COHESIONLESS SOILS

Description	SPT N_{60} (Blows / 12 in.)
Very loose	$0 < N_{60} < 5$
Loose	$5 \le N_{60} < 10$
Medium Dense	$10 \le N_{60} < 30$
Dense	$30 \le N_{60} < 50$
Very Dense	$N_{60} \ge 50$

MOISTURE

Description	Criteria
Dry	No discernable moisture
Moist	Moisture present, but no free water
Wet	Visible free water

PERCENT OR PROPORTION OF SOILS

Description	Criteria
Trace	Particles are present but estimated to be less than 5%
Few	5% - 10%
Little	15% - 25%
Some	30% - 45%
Mostly	50% - 100%

Note: Soils are described in order of decreasing abundance

PARTICLE SIZE

Description		Size (in.)
Boulder		Greater than 12
Cobble		3 - 12
Gravel	Coarse	3/4 - 3
	Fine	1/16 - 3/4
Sand	Coarse	1/16 - 1/5
	Medium	1/64 - 1/16
	Fine	1/200 - 1/64

Note: Boulder and cobble reported sizes are the "intersected length" encountered during drilling, which is usually the minimum cobble or boulder dimension.

ENGINEERING SERVICES	GEOTECHNICAL SERVICES	STATE OF CALIFORNIA DEPARTMENT OF TRANSPORTATION	DIVISION OF ENGINEERING SERVICES STRUCTURE DESIGN DESIGN BRANCH	Project or Structure Name
FUNCTIONAL SUPERVISOR	DRAWN BY / CHECKED BY	FIELD INVESTIGATION BY		LOG OF TEST BORINGS

legend-soil-3of2.dgn 8/6/2009 7:28:44 AM

Rotary borings will be the most common

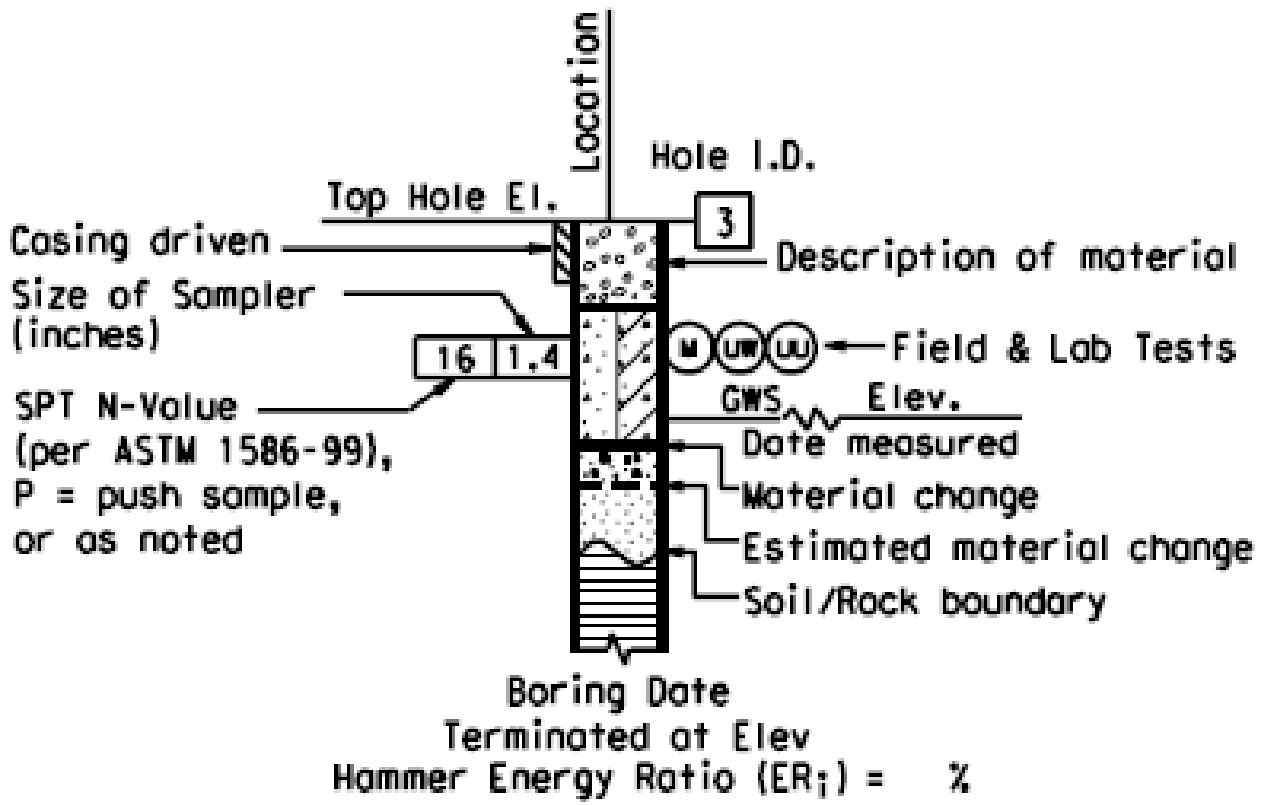

ROTARY BORING

FIELD AND LABORATORY TESTING

- (C) Consolidation (ASTM D 2435)
- (CL) Collapse Potential (ASTM D 5333)
- (CP) Compaction Curve (CTM 216)
- (CR) Corrosivity Testing (CTM 643, CTM 422, CTM 417)
- (CU) Consolidated Undrained Triaxial (ASTM D 4767)
- (DS) Direct Shear (ASTM D 3080)
- (EI) Expansion Index (ASTM D 4829)
- (M) Moisture Content (ASTM D 2216)
- (OC) Organic Content-% (ASTM D 2974)
- (P) Permeability (CTM 220)
- (PA) Particle Size Analysis (ASTM D 422)
- (PI) Plasticity Index (AASHTO T 90) Liquid Limit (AASHTO T 89)
- (PL) Point Load Index (ASTM D 5731)
- (PM) Pressure Meter
- (R) R-Value (CTM 301)
- (SE) Sand Equivalent (CTM 217)
- (SG) Specific Gravity (AASHTO T 100)
- (SL) Shrinkage Limit (ASTM D 427)
- (SW) Swell Potential (ASTM D 4546)
- (UC) Unconfined Compression-Soil (ASTM D 2166) Unconfined Compression-Rock (ASTM D 2938)
- (UU) Unconsolidated Undrained Triaxial (ASTM D 2850)
- (UW) Unit Weight (ASTM D 4767)
- (VS) Vane Shear (AASHTO T 223)

CONSISTENCY OF COHESIVE SOILS			
Description	Shear Strength (tsf)	Pocket Penetrometer Measurement (tsf)	Torvane Measurement (tsf)
Very Soft	Less than 0.12	Less than 0.25	Less than 0.12
Soft	0.12 - 0.25	0.25 - 0.50	0.12 - 0.25
Medium Stiff	0.25 - 0.50	0.50 - 1.0	0.25 - 0.50
Stiff	0.50 - 1.0	1 - 2	0.50 - 1.0
Very Stiff	1.0 - 2.0	2 - 4	1.0 - 2.0
Hard	Greater than 2.0	Greater than 4.0	Greater than 2.0

APPARENT DENSITY OF COHESIONLESS SOILS	
Description	SPT N_{60} (Blows / 12 in.)
Very loose	$0 < N_{60} < 5$
Loose	$5 \leq N_{60} < 10$
Medium Dense	$10 \leq N_{60} < 30$
Dense	$30 \leq N_{60} < 50$
Very Dense	$N_{60} \geq 50$

$$N_{60} = N_{lotb} \times Eri/60$$

Standard Penetration Test (SPT)

- Used primarily in granular soils
- Crude form of testing but results are widely accepted
- Correlations
  - relative density and friction angle

Identifying Soils to be Excavated

- Location of excavation
- Do elevations on logs match field elevations?
- What time of year is it? Will soils be wet/saturated?
- Watch the soils coming up out of the excavation. Compare to the boring logs.

Cohesive vs Cohesionless Soils

Soil consists of a mixture of:

- Water
- Air

And one or more of the following:

- Clay
- Silt
- Sand
- Gravel
- Cobles / Boulders

Cohesive vs Cohesionless Soils

The amounts of these ingredients determine the soils "cohesiveness", or how well the soil will hold together.

Cohesive Soils

- Do not crumble
- Easily molded when wet
- Hard to break up when dry
- Clayey soils

Cohesionless Soils

- Coarse grained soils
- Sands and Gravels
- Will not stay in clumps
- Granular

Field Identification of Soils

Pocket Penetrometer

- Cohesive soils only
- Unconfined compressive strength
- Direct-reading, spring-operated instrument
- Pushed into soil, indicator displays value in Tons/ft^2
- Value in Error rate in the range of ± 20-40%

Pocket Penetrometer

Field Identification of Soils

SHEARVANE (TORVANE)

- Cohesive soils only
- Unconfined compressive strength
- Multiply instrument reading by 2
- Value in kilograms per square centimeter (Kg/cm^2)
- Blades of the vane are pressed into a level section of undisturbed soil, and the torsional knob is slowly turned until soil failure occurs

Torvane

Shearvane (or Torvane)

Field Identification of Soils

Test Method	Course-grained soil	Fine-grained soil
Triaxial compression test	very good*	very good
Unconfined compression test	not applicable	very good
Direct shear test	good*	fair
Vane shear test	not applicable	good
Cone penetration test (CPT)	fair	fair
Pocket penetrometer	not applicable	fair
Standard penetration test (SPT)	fair	poor

*Recovery of undisturbed samples can be difficult.

Field Identification of Soils

Plasticity or Wet Thread Test

High plasticity (CH)

- Molds into a ball or cylinder
- Deforms under firm finger pressure
- No crumbling or cracking

Medium plasticity (CL) –

- Molds into a ball or cylinder
- Cracks or crumbles under finger pressure.

Field Identification of Soils

Plasticity or Wet Thread Test

Low plasticity (CL, ML, or MH)

- Will not lump into a ball or cylinder without breaking up

Organic material (OL or OH)

- Soft, spongy ball or thread when molded

Nonplastic soil (ML or MH)

- Soil cannot be rolled into a thread at any moisture content

Field Identification of Soils

Shine Test

- Clayey soils
- Means of measuring plasticity
- Slightly moist or dry piece of soil rubbed with a fingernail or smooth metal
- Highly plastic clay - definite shine
- Lean clay - remains dull

Engineering Properties of Soils

GRANULAR SOILS

- Rough correlation between standard penetration index value (N) and the angle of internal friction (ϕ) can be found in Table 1-1
- Grain size, distribution, and shape will also effect angle of internal friction

Table 1-1. Properties Granular Soils

Apparent Density	Relative Density (%)	SPT, N_{60} (blows/ft)	Friction Angle, Ø (deg)	Unit Weight (pcf)	
				Moist	Submerged
Very Loose	0-15	0-4	<28	<100	<60
Loose	16-35	5-10	28-30	95-125	55-65
Medium Dense	36-65	11-30	31-36	110-130	60-70
Dense	66-85	31-50	37-41	110-140	65-85
Very Dense	86-100	>50	>41	>130	>75

Engineering Properties of Soils

SIMPLIFIED TYPICAL SOIL VALUES

Soil Classification	ϕ Friction Angle of the soil	Density or Consistency	γ Soil Unit Weight (pcf)	K_a Coefficient of Active Earth Pressure	$K_w = K_a \gamma$ Equiv. Fluid Wt. (pcf)
Gravel, Gravel-Sand Mixture, Coarse Sand	41	Dense	130	0.21	27
	34	Medium Dense	120	0.28	34
	29	Loose	90	0.35	32
Medium Sand	36	Dense	117	0.26	30
	31	Medium Dense	110	0.32	35
	27	Loose	90	0.38	34
Fine Sand	31	Dense	117	0.32	37
	27	Medium Dense	100	0.38	38
	25	Loose	85	0.41	34
Fine Silty Sand, Sandy Silt	29	Dense	117	0.35	41
	27	Medium Dense	100	0.38	38
	25	Loose	85	0.41	34
Silt	27	Dense	120	0.38	45
	25	Medium Dense	110	0.41	45
	23	Loose	85	0.44	37

TABLE 11

Engineering Properties of Soils

- The properties of granular soils can also be crudely approximated as shown below

Description	SPT Blows/Ft	Field Approximation
Very Loose	0 - 4	Easily penetrated with ½" rebar pushed by hand
Loose	5 - 10	Easily penetrated with ½" rebar pushed by hand
Medium Dense	11 - 30	Penetrated a foot with ½" rebar driven with 5-lb hammer
Dense	31 - 50	Penetrated a foot with ½" rebar driven with 5-lb hammer
Very Dense	> 50	Penetrated only a few inches with ½" rebar driven with 5-lb hammer

Engineering Properties of Soils

The properties of cohesive soils is shown in Table 1-2

Table 1-2. Properties Cohesive Soils

Consistency	Unconfined Compressive Strength (psf)	Moist Unit Weight (pcf)
Very Soft	0-500	<100-110
Soft	500-1,000	100-120
Medium Stiff	1,000-2,000	110-125
Stiff	2,000-4,000	115-130
Very Stiff	4,000-8,000	120-140
Hard	>8,000	>132

Engineering Properties of Soils

The properties of cohesive soils can also be approximated as shown below

Description	Unconfined Compressive Strength (psf)	Field Approximation
Very Soft	0 - 500	Easily penetrated several inches by fist
Soft	500 - 1000	Easily penetrated several inches by thumb
Medium Stiff	1000 - 2000	Penetrated several inches by thumb with moderate effort
Stiff	2000 - 4000	Readily indented by thumb but penetrated only with great effort
Very Stiff	4000 - 8000	Readily indented by thumb nail
Hard	> 8000	Indented by thumb nail with difficulty

Summary

- Existing Information
- Identifying soils to be excavated
- Basic engineering properties of soils

SURCHARGES

Tony English, PE

530 713 7869

WINTER TRAINING 2010

Surcharges

- What is a Surcharge
- When is it applied
- Types of Surcharges
- How to Calculate a Surcharge

What is a Surcharge?

- A surcharge is a concentrated or uniformly distributed load acting on the surface of the backfill that increases the horizontal earth pressure on the shoring system.

What is a Surcharge?

- For example:
  - Traffic

What is a Surcharge?

– Equipment

What is a Surcharge?

– Buildings

What is a Surcharge?

– Stockpiles

When to Consider Surcharges

- Always
- Always
- Always

When to Consider Surcharges

- A surcharge will need to be considered when it falls within the failure plane. (roughly 45°-ϕ/2)
- Large loads outside of the failure plane may also need to be considered.

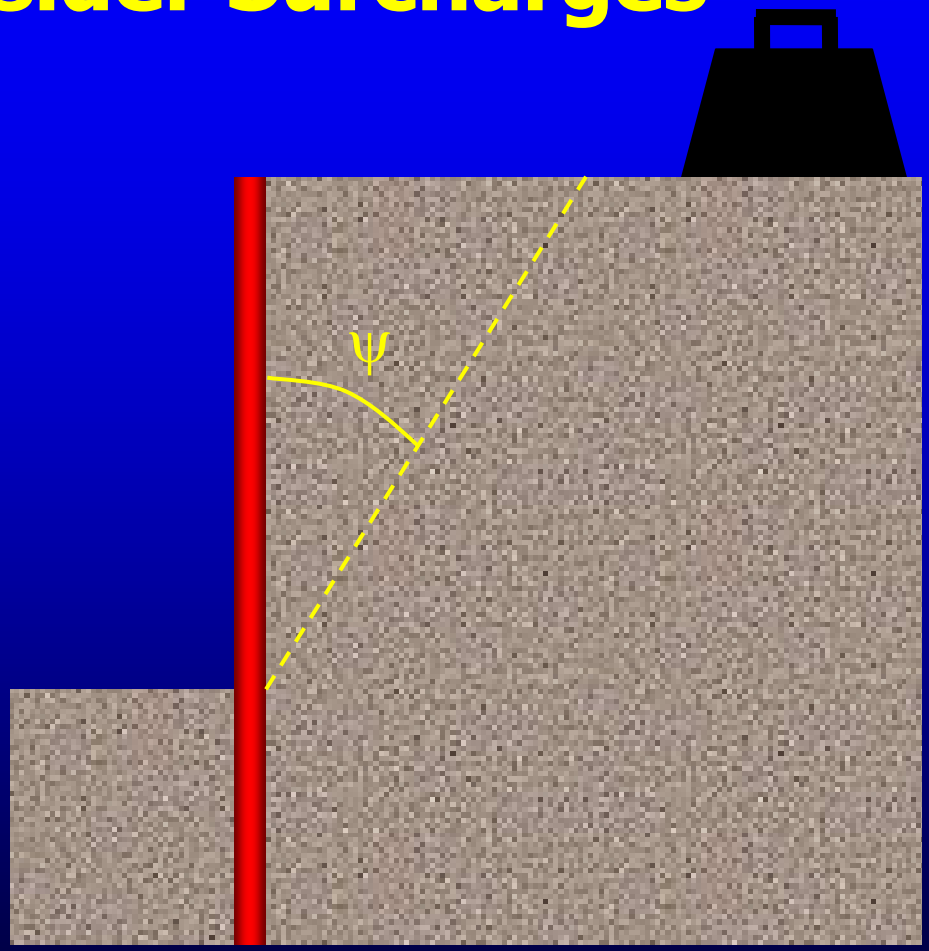

Uniform Surcharge Loads

- A uniform surcharge is considered when the surcharge is constant over the entire length of the wall
- The horizontal earth pressure is calculated as $\sigma_h = (K)\ (Q)$
  - σ_h is the horizontal earth pressure
  - K is the coefficient of lateral earth pressure
  - Q is the uniform surcharge applied

Uniform Surcharge Loads

- Minimum Construction Surcharge
  - 72 psf
  - Rough equivalent of 2 ft of soil
    - $\sigma_h = (0.3)(2' * 120 \text{ pcf}) = 72 \text{ psf}$
  - Used on all shoring systems
  - Applied from the top of the system to the lesser of 10 feet or the dredge line

Uniform Surcharge Loads

Minimum Construction Surcharge

$H \leq 10$ ft

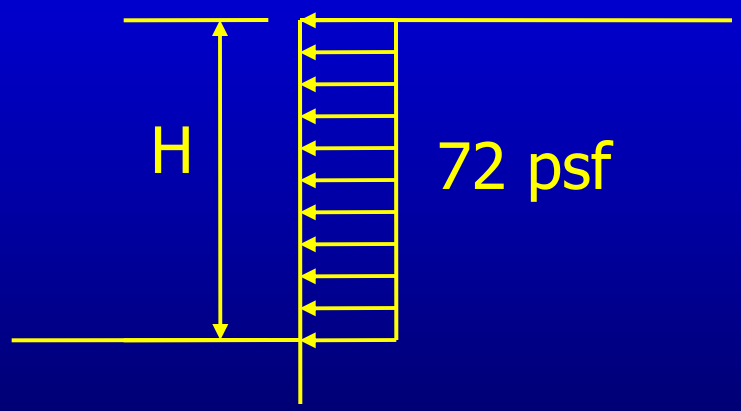

$H > 10$ ft

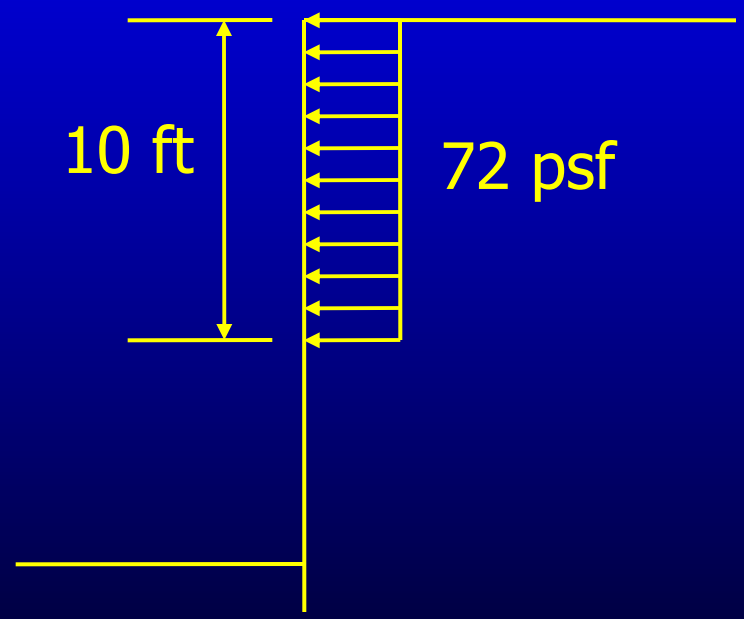

Uniform Surcharge Loads

- Alternative Traffic Surcharge
  - 100 psf
  - Used as alternative to the Boussinesq traffic loading
  - Considered from the top of the wall to the tip of the shoring system

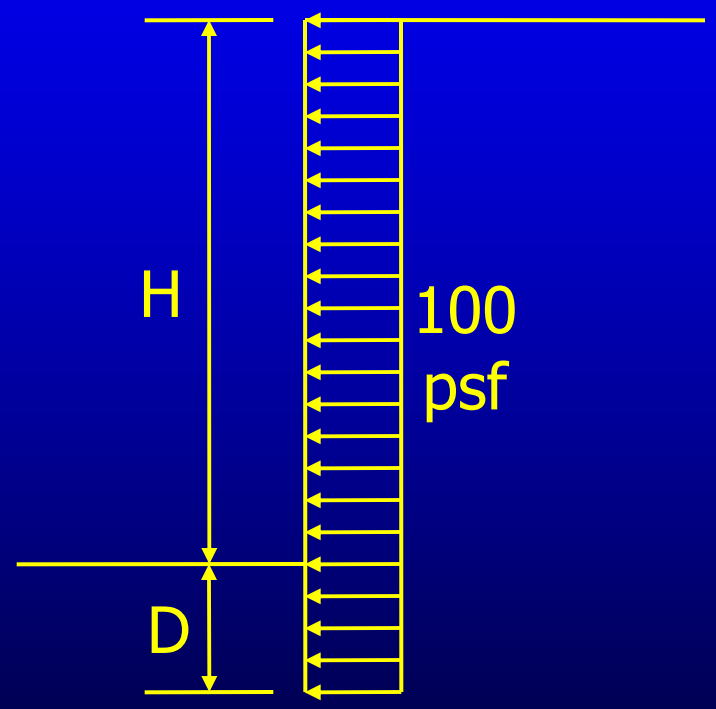

Boussinesq Surcharges

- In 1885, Joseph Valentin Boussinesq developed mathematical expressions for determining the stresses at a point in a mass due to surface point loads.

Boussinesq Surcharges

- Three typically used Boussinesq Loads
  - Strip Loads
  - Line Loads
  - Point Loads

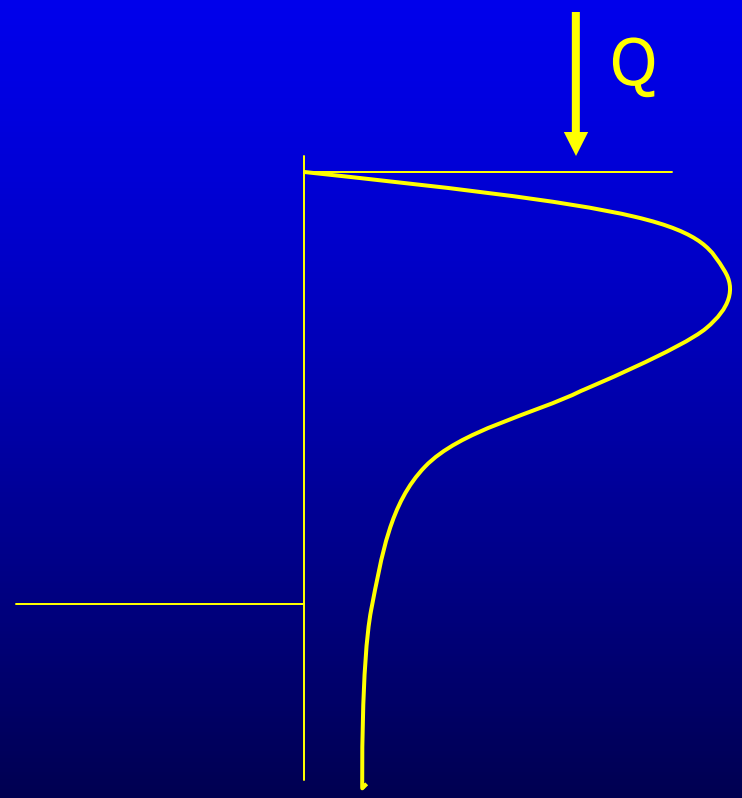

Strip Loads

- Loads such as highway and railroads, generally running parallel to the wall

$$\sigma_h = \frac{2Q\left[\beta_R - \sin\beta\cos(2\alpha)\right]}{\pi}$$

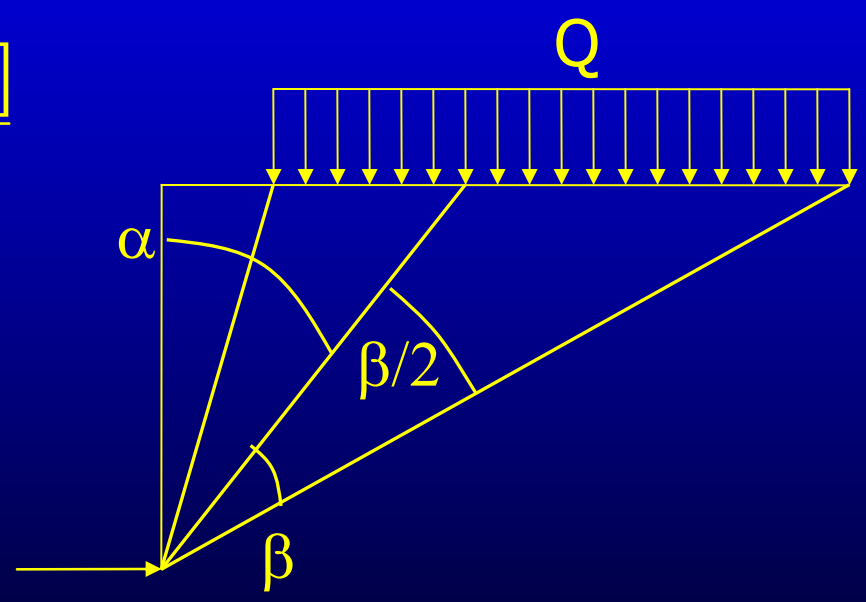

Strip Loads

- Most commonly used strip load is traffic loading

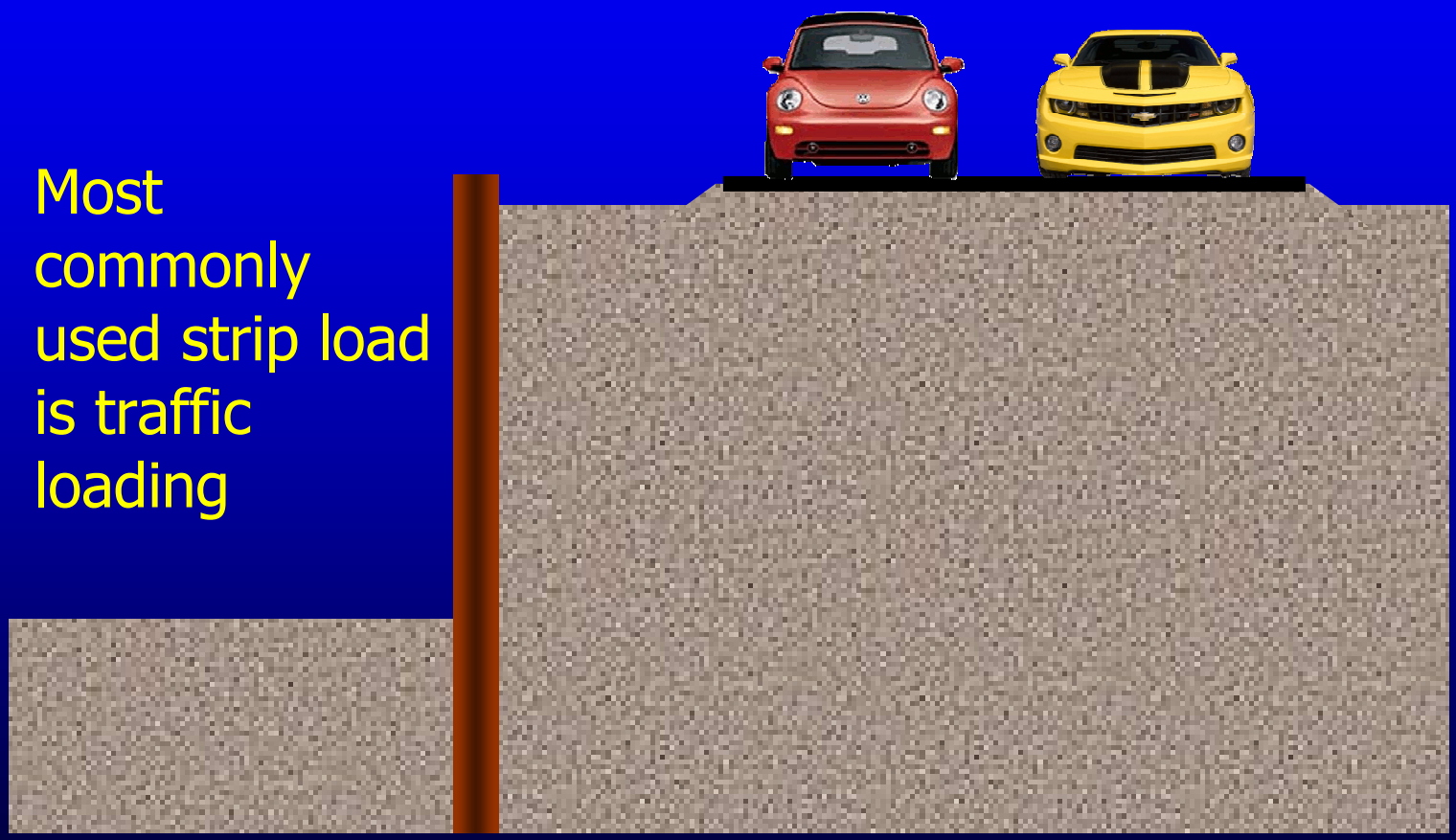

Strip Loads

- 300 psf for the width of the traveled way

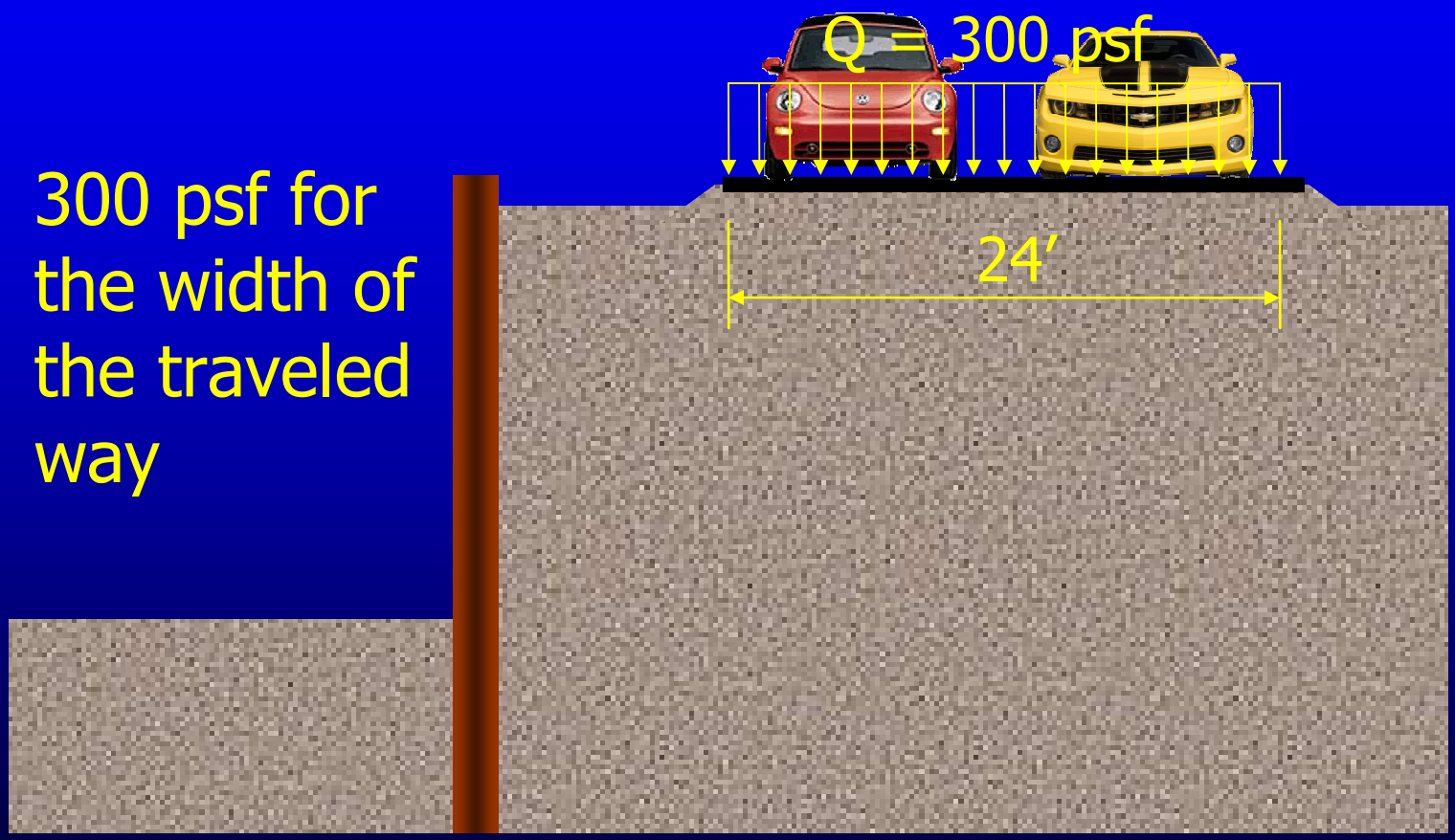

Strip Loads

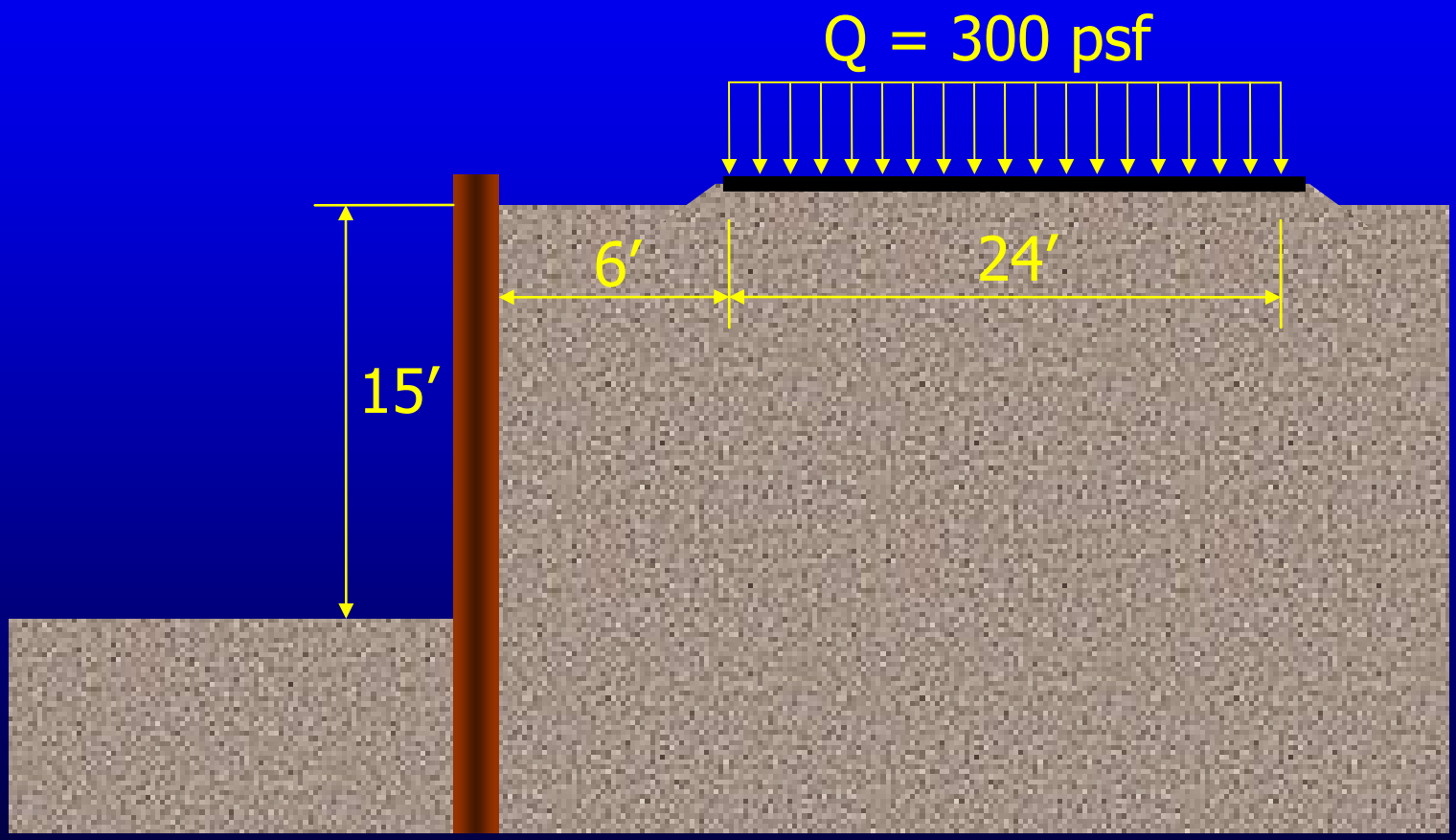

Strip Loads

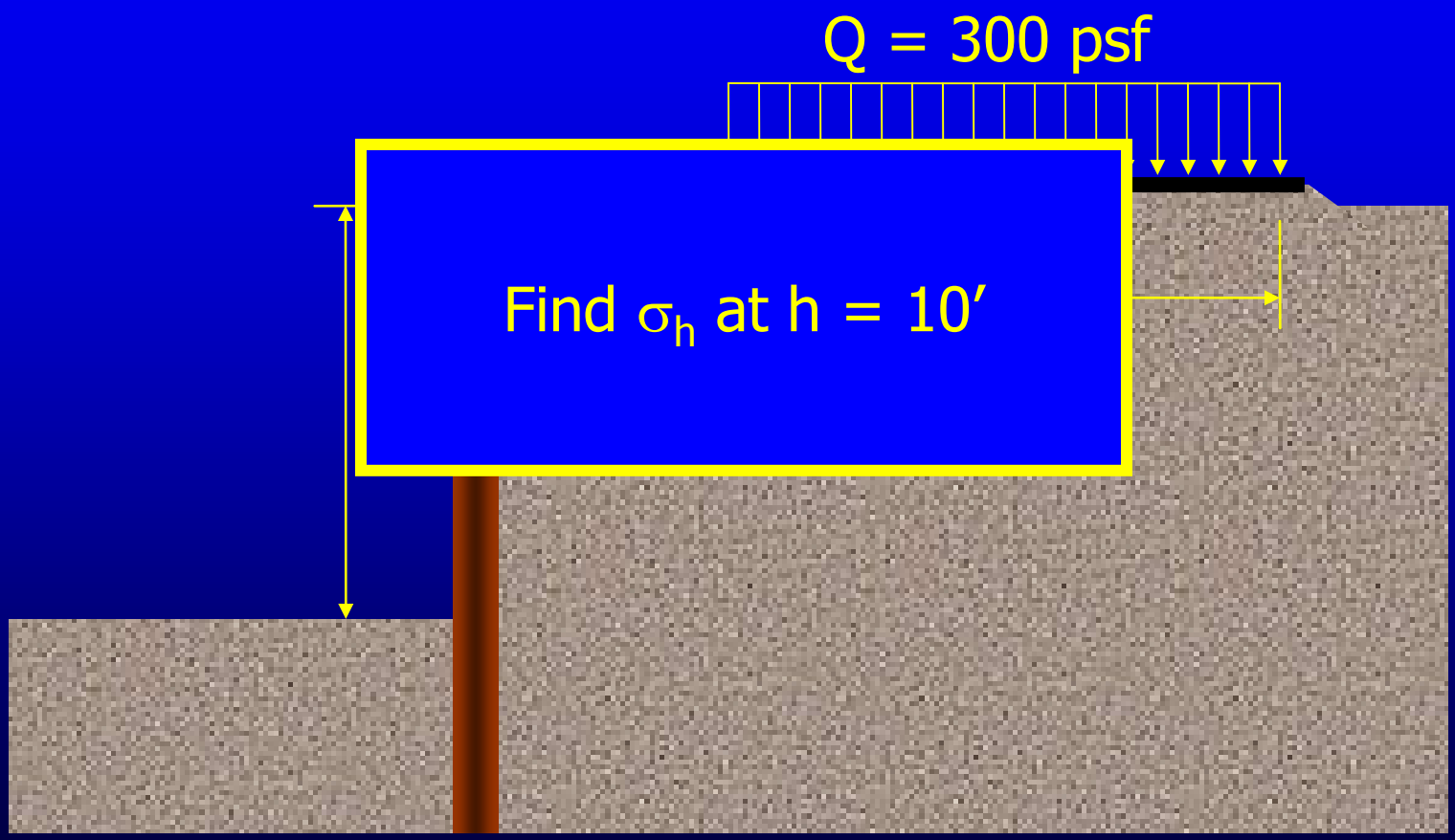

Strip Loads

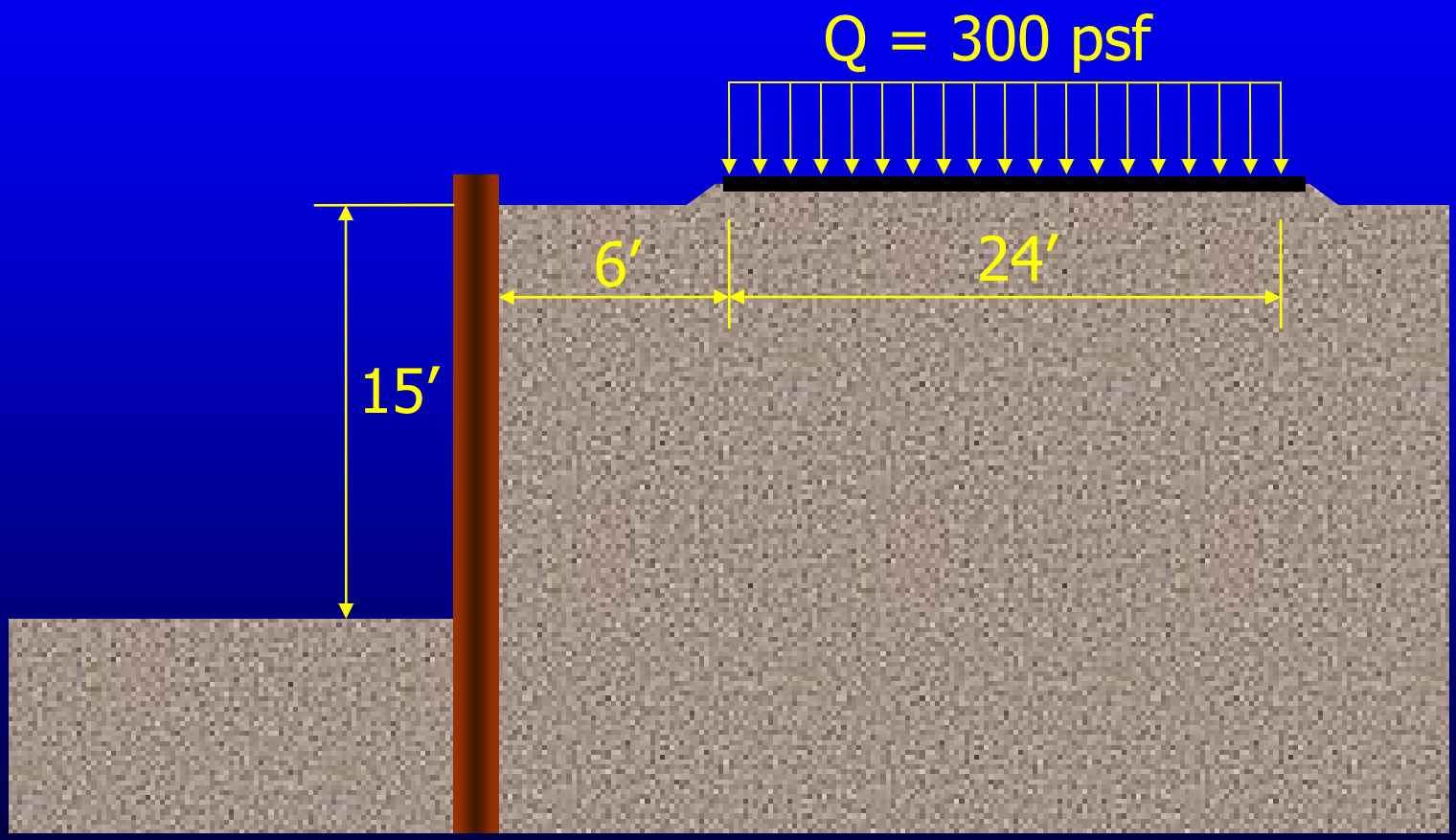

Strip Loads

$$\sigma_h = \frac{2Q[\beta_R - \sin\beta\cos(2\alpha)]}{\pi}$$

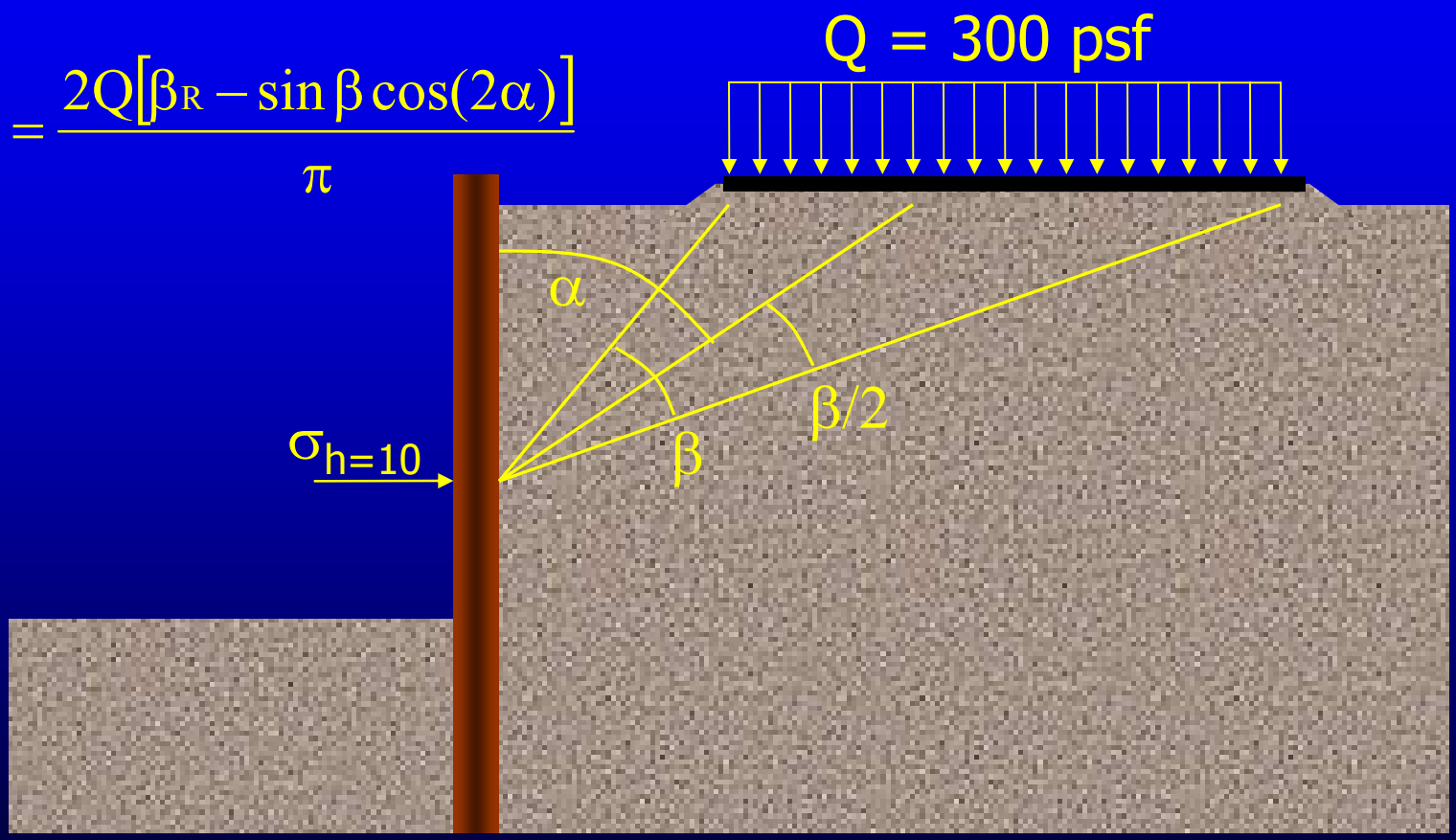

Strip Loads

β = atan(L2/h) – atan(L1/h)

β = atan(30/10) – atan(6/10)

$\beta = 40.6^{O}$

$\beta_R = \beta\ (\pi/180) = 0.709$

α = atan(L1/h) + β/2

α = atan(6/10) + 40.6/2

$\alpha = 51.3^{O}$

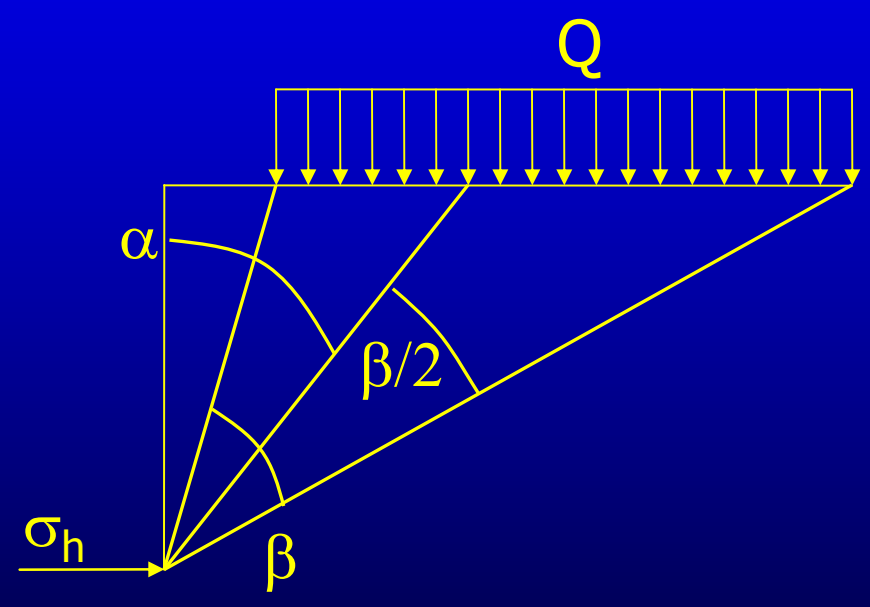

Strip Loads

$$\sigma_h = \frac{2Q\left[\beta_R - \sin\beta\cos(2\alpha)\right]}{\pi}$$

$$\sigma_h = \frac{2(300)\left[0.709 - \sin(40.6)\cos(2(51.3))\right]}{\pi}$$

$$\sigma_{10} = 162.5\,psf$$

Strip Loads

Comparing the hand-calculated results to the T&S program output for the same problem:

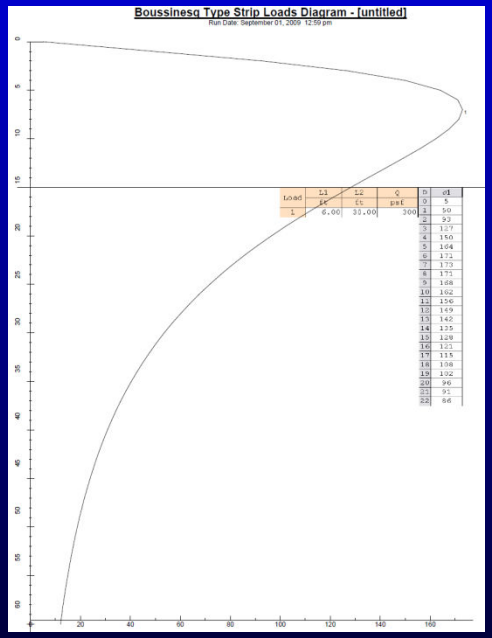

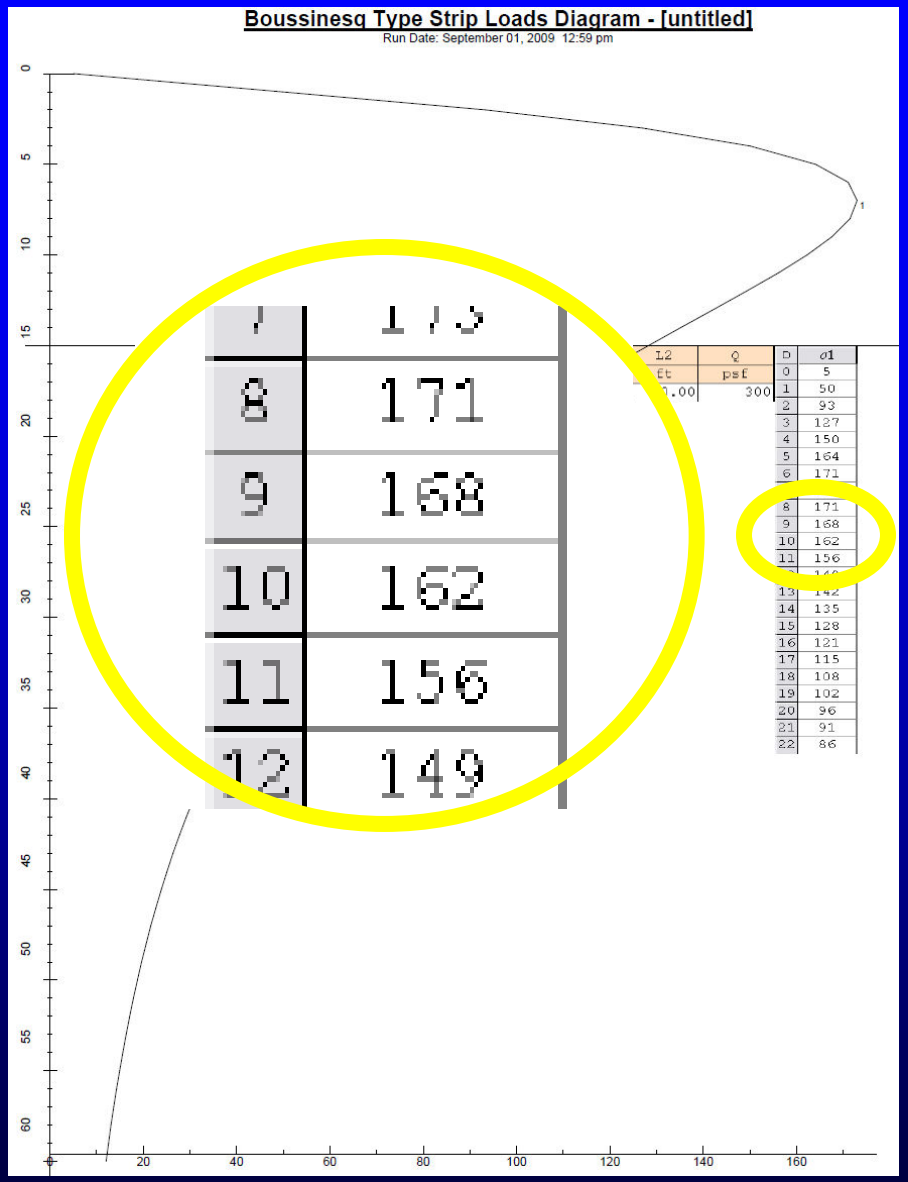
Boussinesq Type Strip Loads Diagram - [untitled]
Run Date: September 01, 2009 12:59 pm
8 171
9 168
10 162
11 156
12 149
L2 Q
ft psf
7.00 300
D σ1
0 5
1 50
2 93
3 127
4 150
5 164
6 171
8 171
9 168
10 162
11 156
13 142
14 135
15 128
16 121
17 115
18 108
19 102
20 96
21 91
22 86
0 5 10 15 20 25 30 35 40 45 50 55 60
20 40 60 80 100 120 140 160

Line Loads

- Continuous loads of narrow width generally parallel to the wall
  - K rail
  - Wall footings

Line Loads

for $m > 0.4$:

$$\sigma_h = 1.28 \frac{Q_1}{H} \frac{m^2 n}{\left(m^2 + n^2\right)^2}$$

for $m \leq 0.4$:

$$\sigma_h = \frac{Q_1}{H} \frac{0.2n}{\left(0.16 + n^2\right)^2}$$

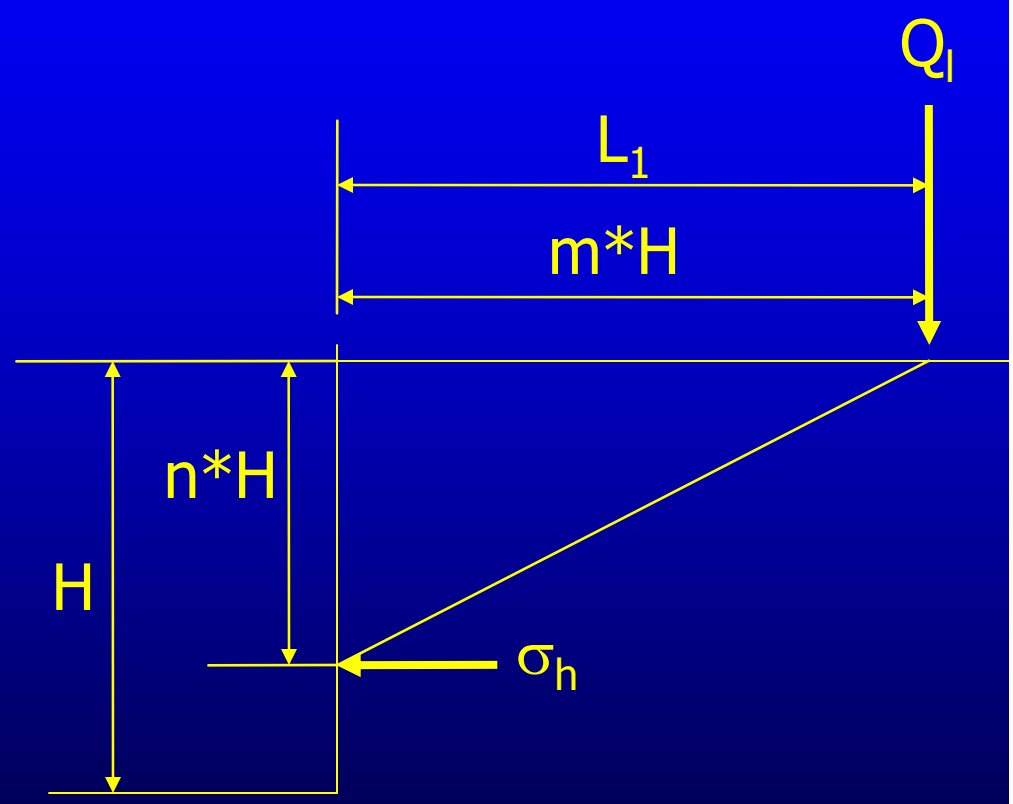

Line Loads

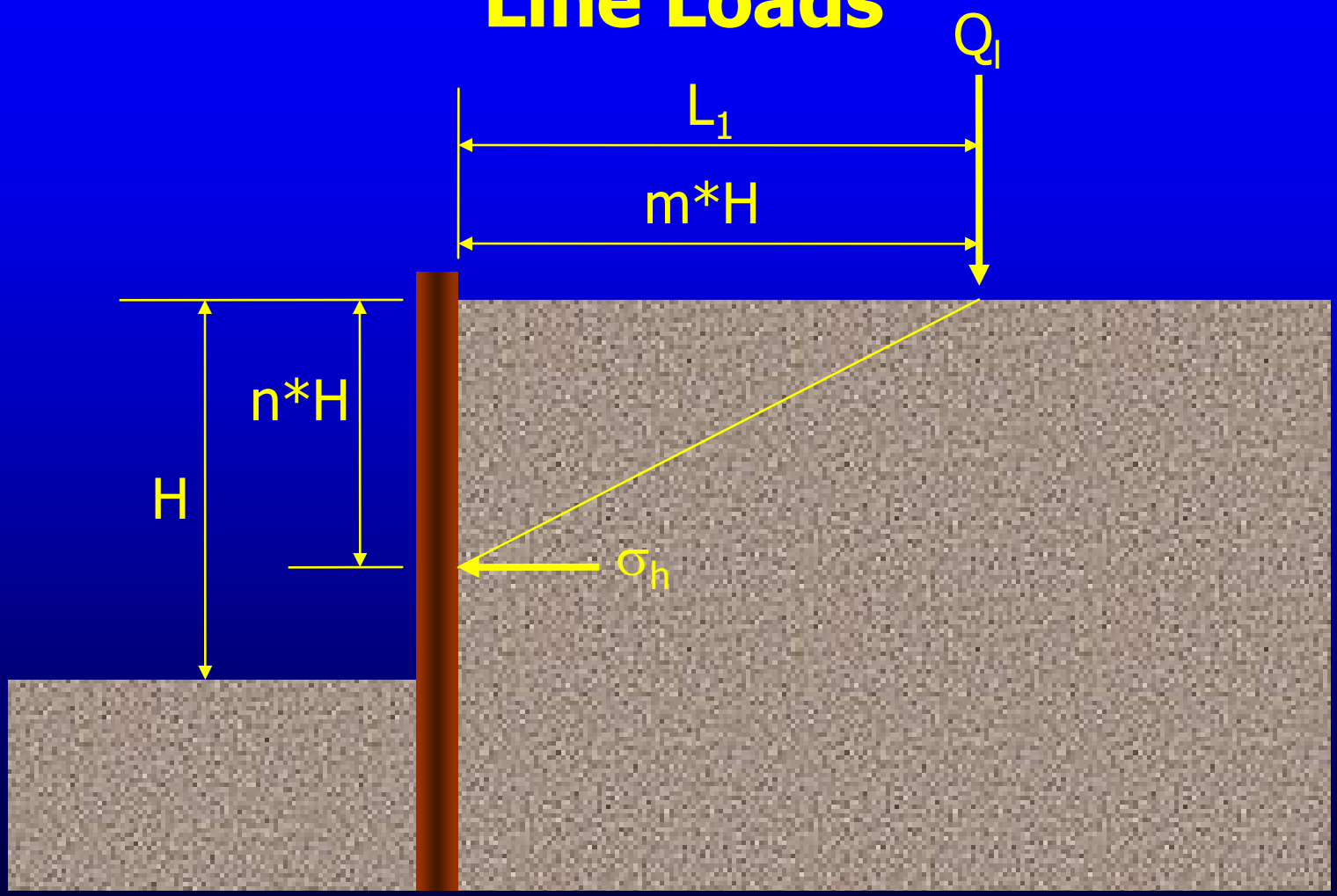

Line Loads

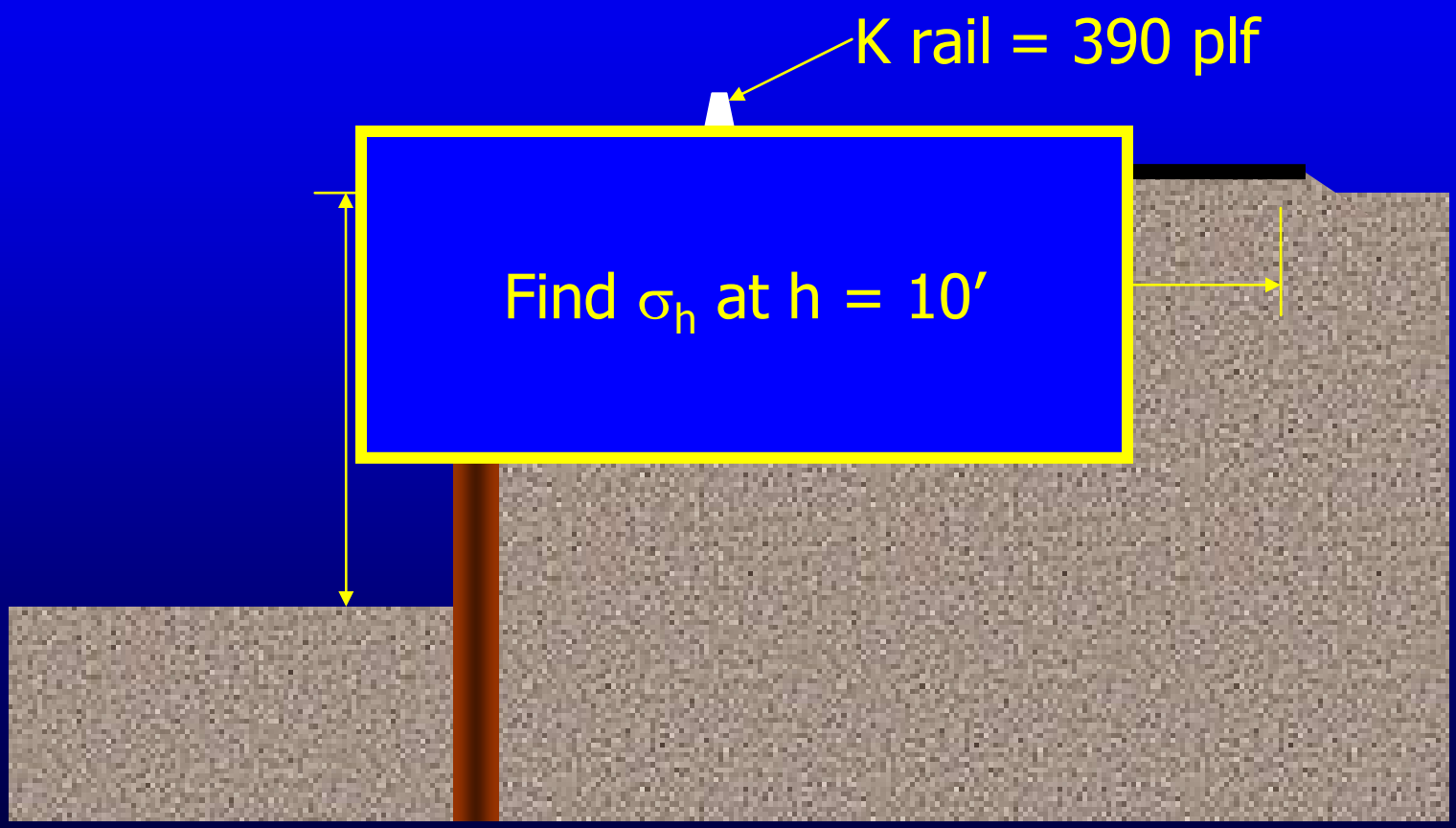

Line Loads

- Find m
  - L1 = m * H
  - m = 6 / 15
  - m = 0.4
- Find n
  - h = n * H
  - n = 10 / 15
  - n = 0.667

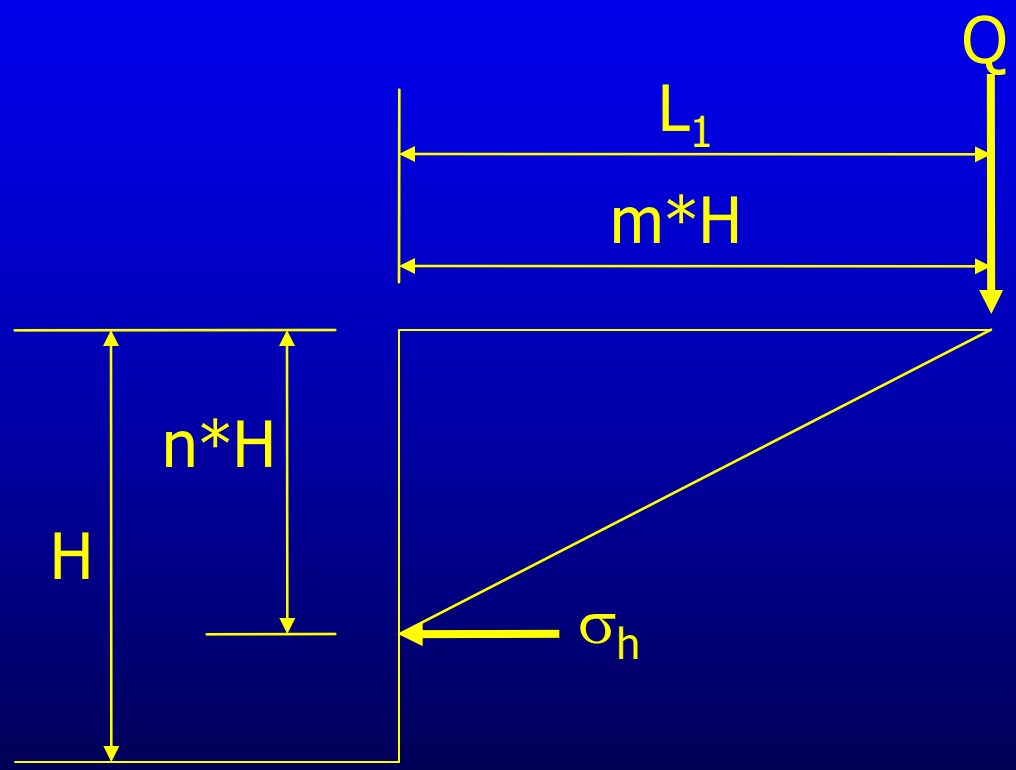

Line Loads

$$\text{for } m \le 0.4 \qquad \sigma_h = \frac{Q_1}{H}\frac{0.2n}{\left(0.16+n^2\right)^2}$$

$$\sigma_{10} = \frac{390}{15}\frac{0.2(0.667)}{\left(0.16+0.667^2\right)^2}$$

$$\sigma_{10} = 9.48\,psf$$

Line Loads

Comparing the hand-calculated results to the T&S program output for the same problem:

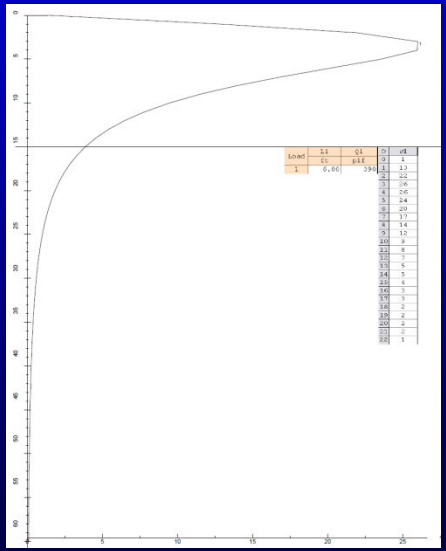

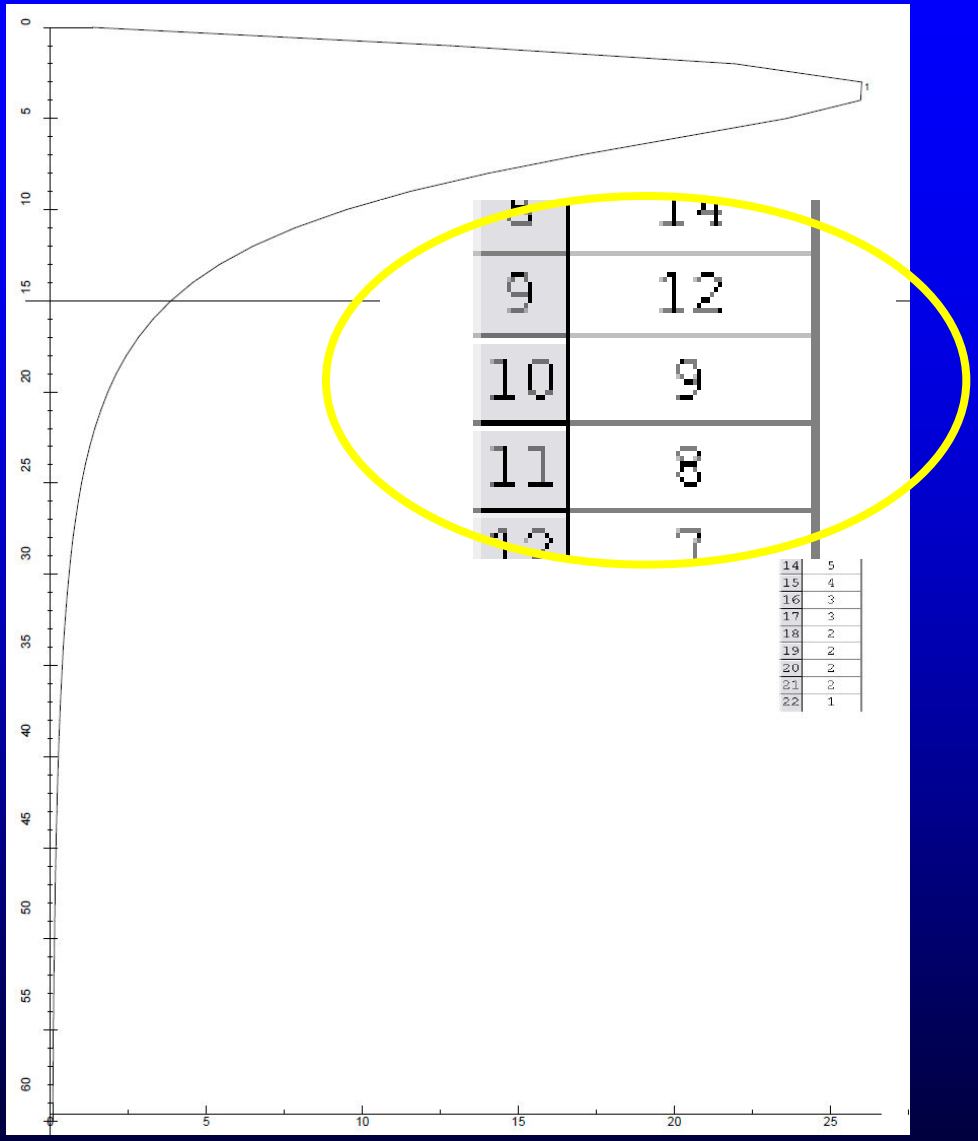
0
5
10
15
20
25
30
35
40
45
50
55
60
5
10
15
20
25
9 12
10 9
11 8
14 5
15 4
16 3
17 3
18 2
19 2
20 2
21 2
22 1

Point Loads

- Point loads are large loads concentrated in small areas
  - Wheel of a concrete truck
  - Deadman
  - Crane Outrigger

Point Loads

for $m > 0.4$:

$$\sigma_h = 1.77 \frac{Q_p}{H^2} \frac{m^2 n^2}{\left(m^2 + n^2\right)^3}$$

for $m \leq 0.4$:

$$\sigma_h = 0.28 \frac{Q_p}{H^2} \frac{n^2}{\left(0.16 + n^2\right)^3}$$

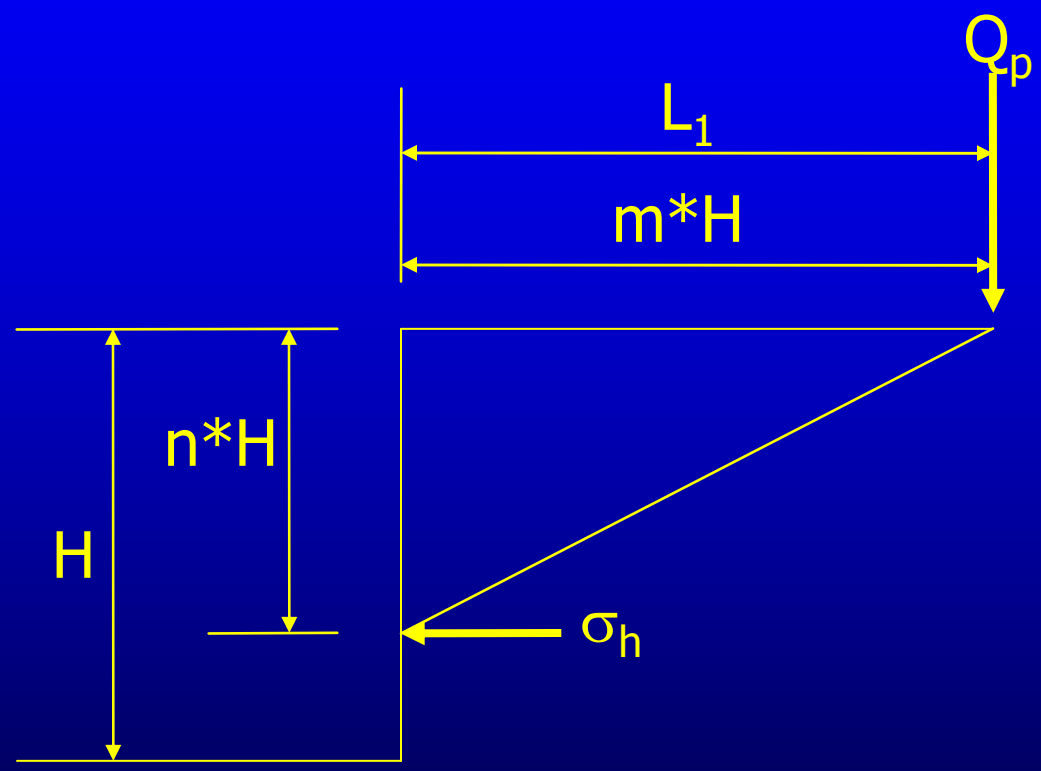

Point Loads

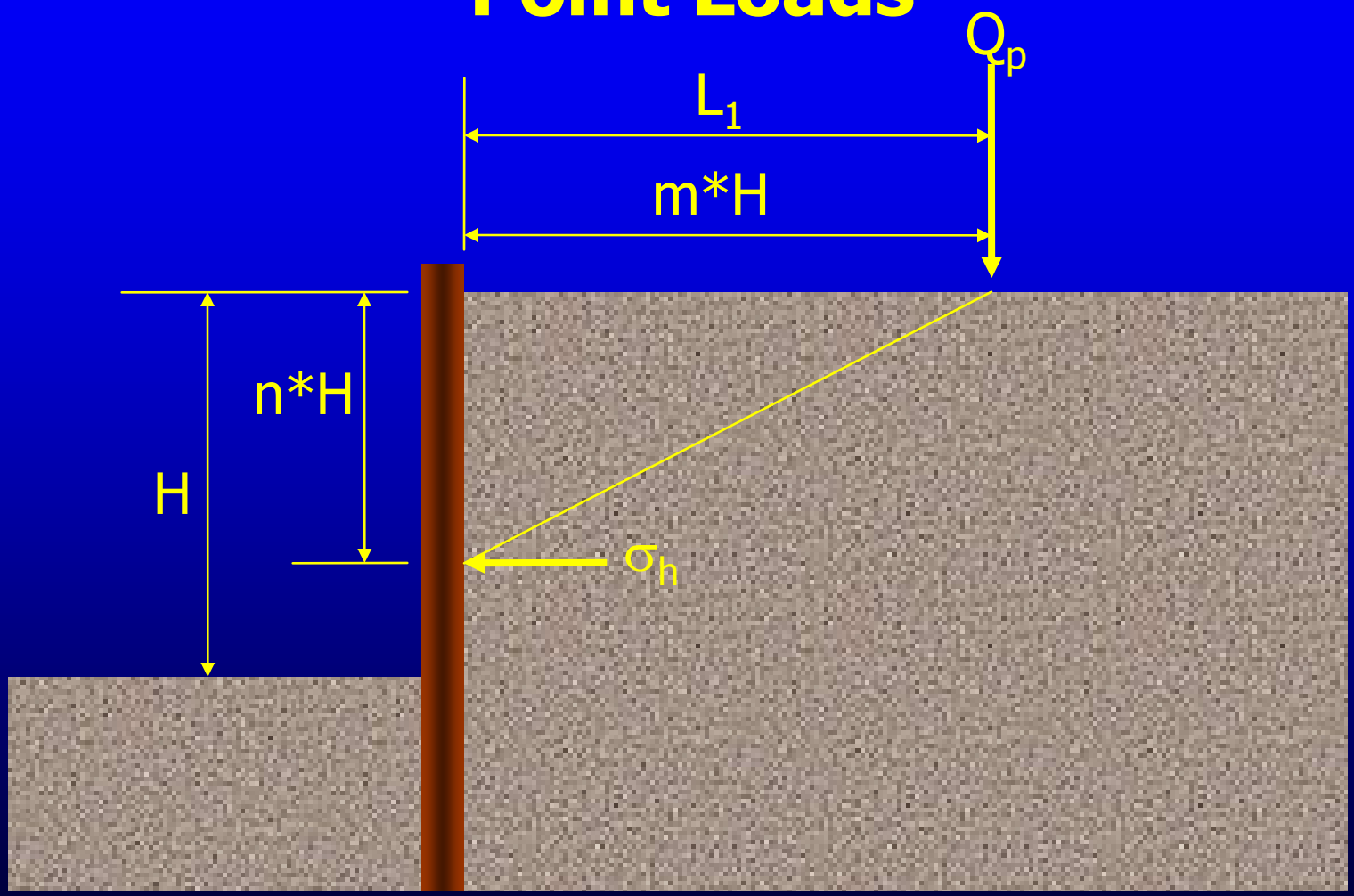

Point Loads

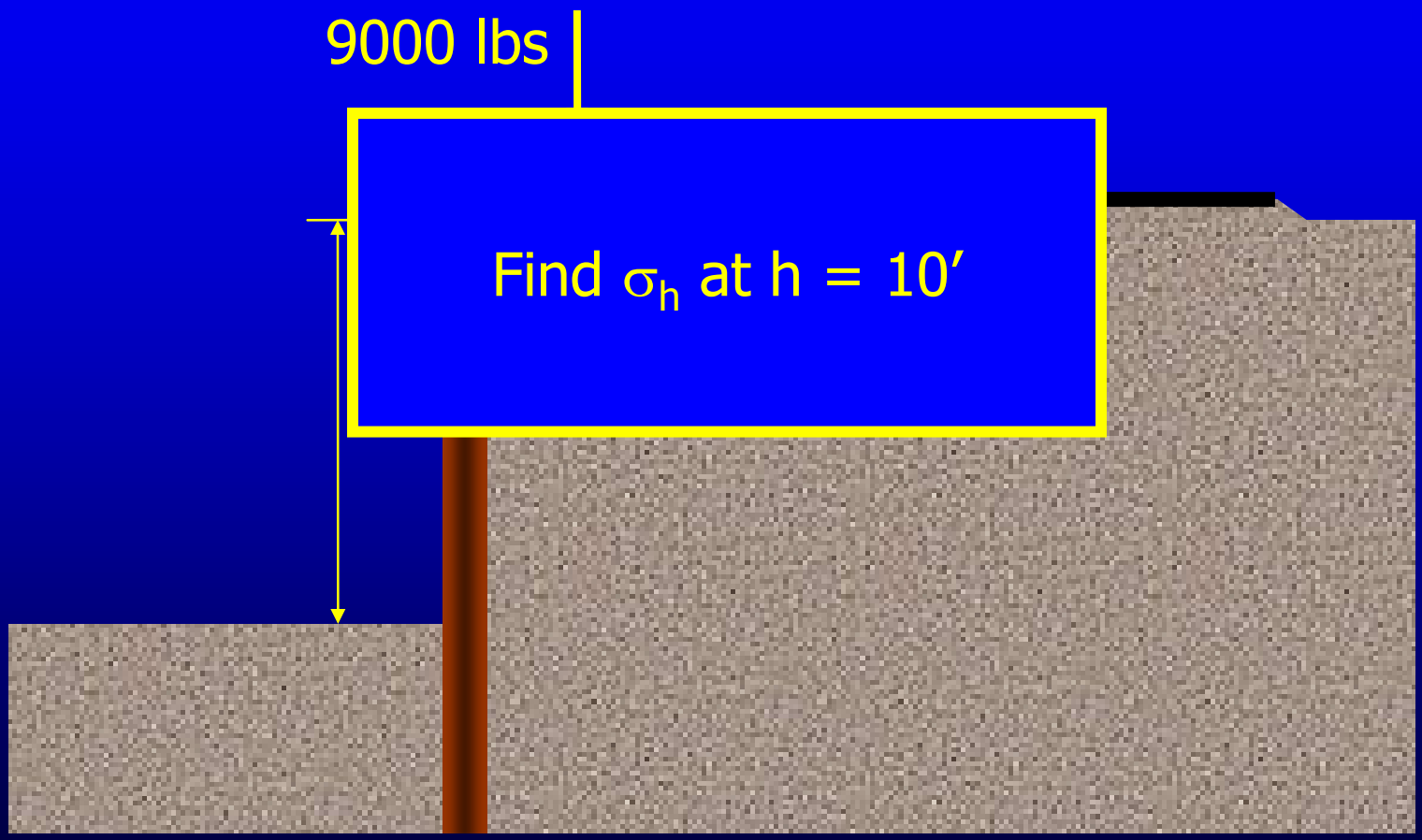

Point Loads

- Find m
  - L1 = m * H
  - m = 3 / 15
  - m = 0.2
- Find n
  - h = n * H
  - n = 10 / 15
  - n = 0.667

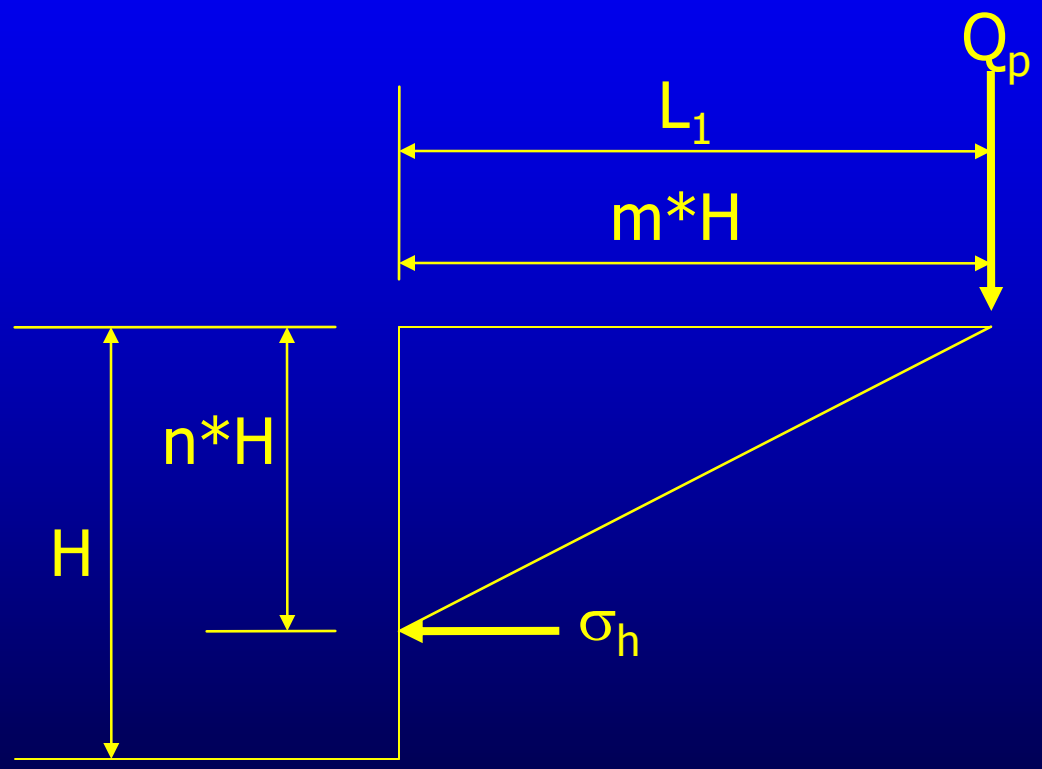

Point Loads

$$\text{for } m \le 0.4 \qquad \sigma_h = 0.28 \frac{Q_p}{H^2} \frac{n^2}{\left(0.16 + n^2\right)^3}$$

$$\sigma_{10} = 0.28 \frac{9000}{15^2} \frac{\left(0.667\right)^2}{\left(0.16 + 0.667^2\right)^3}$$

$$\sigma_{10} = 22.5\, psf$$

Point Loads

Comparing the hand-calculated results to the T&S program output for the same problem:

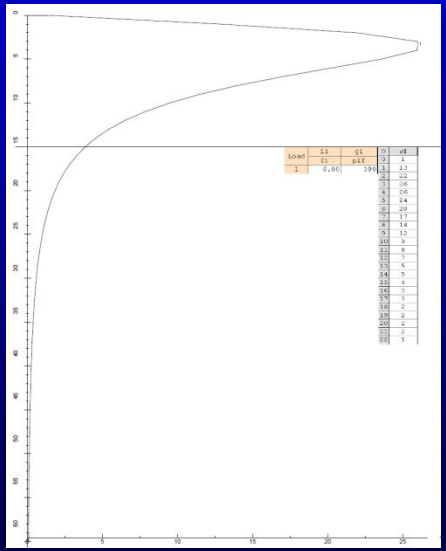

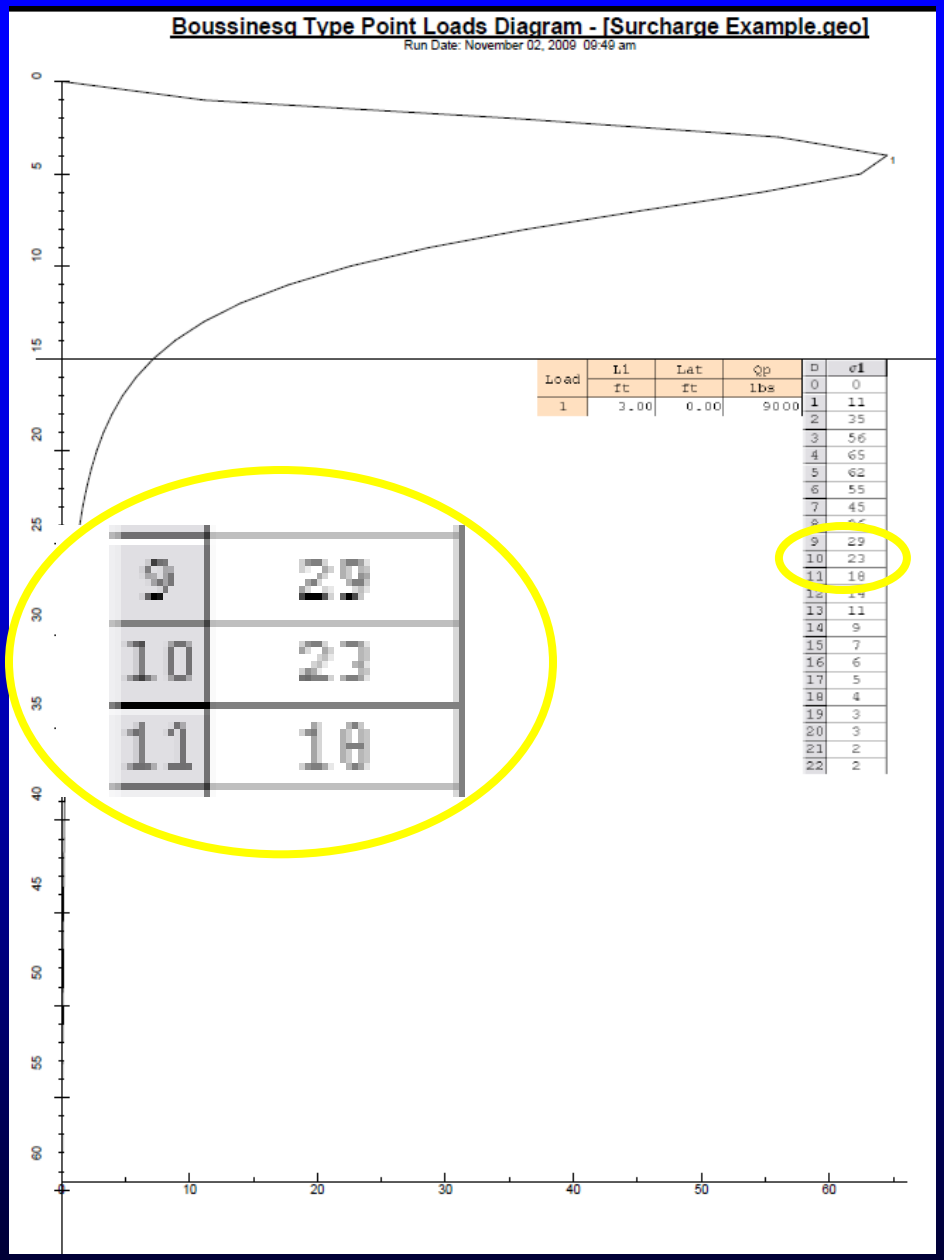

Load	L1	Lat	Qp
	ft	ft	lbs
1	3.00	0.00	9000

D	σ1
0	0
1	11
2	35
3	56
4	65
5	62
6	55
7	45
8	[illegible]
9	29
10	23
11	18
12	14
13	11
14	9
15	7
16	6
17	5
18	4
19	3
20	3
21	2
22	2

Point Loads

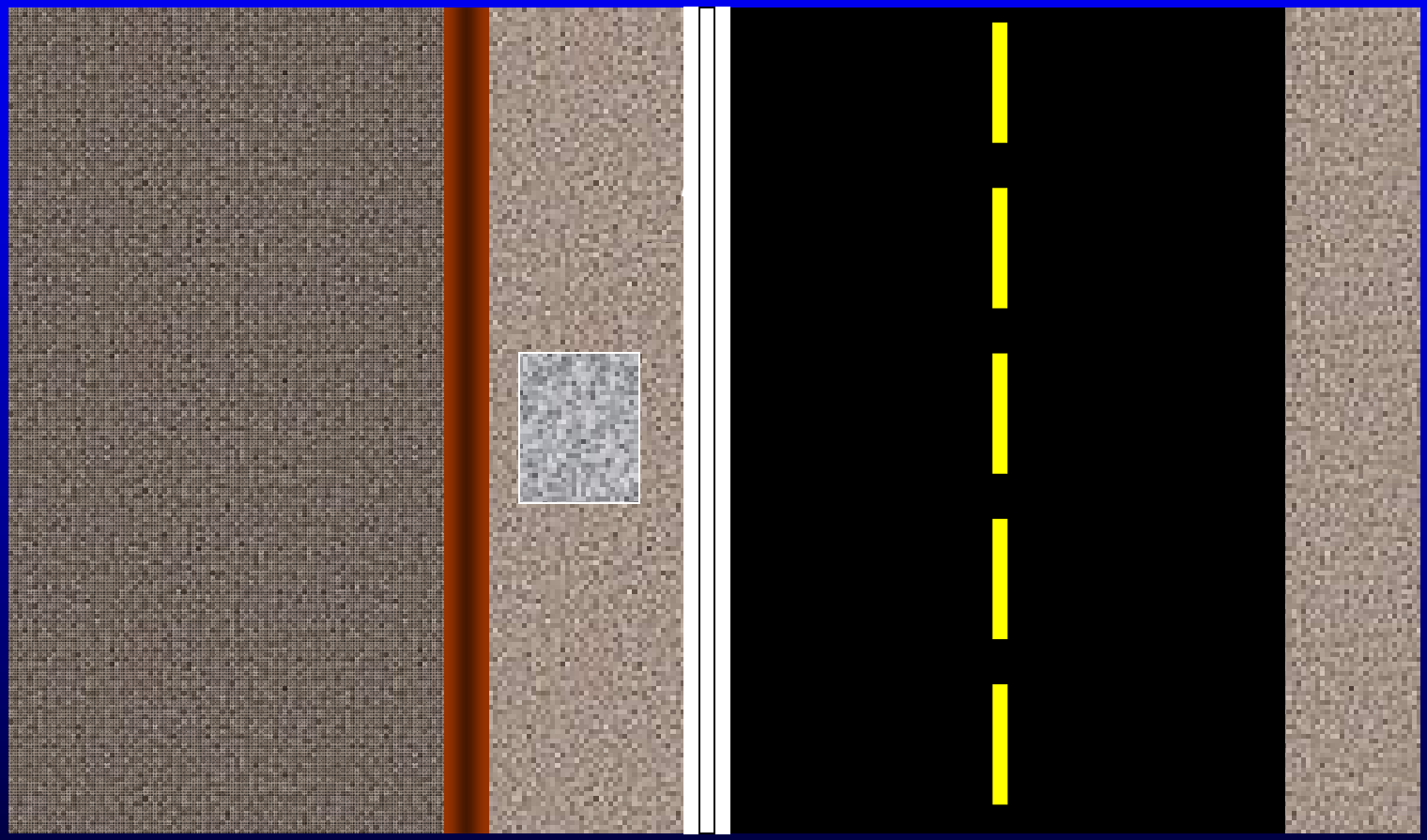

Point Loads

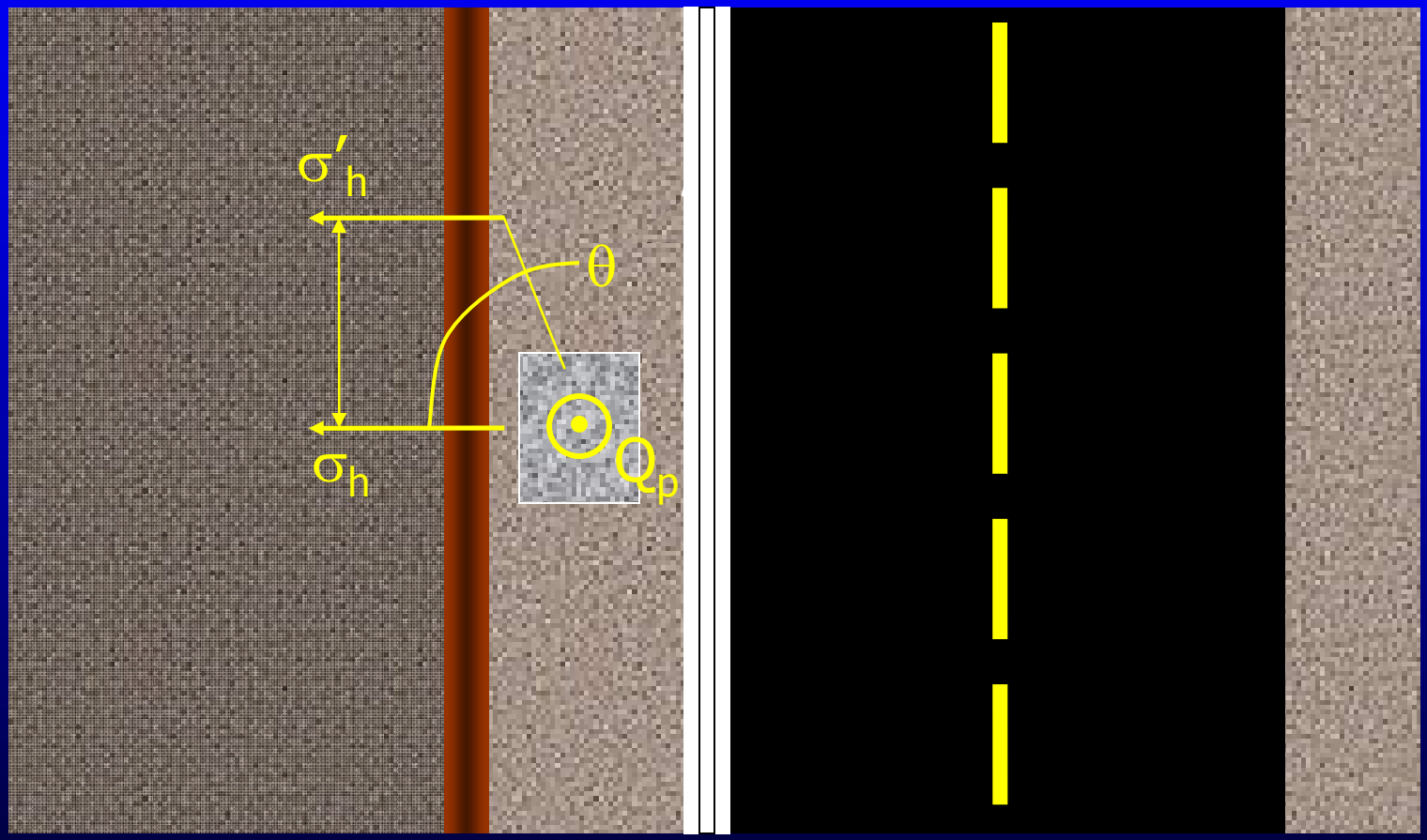

Point Loads

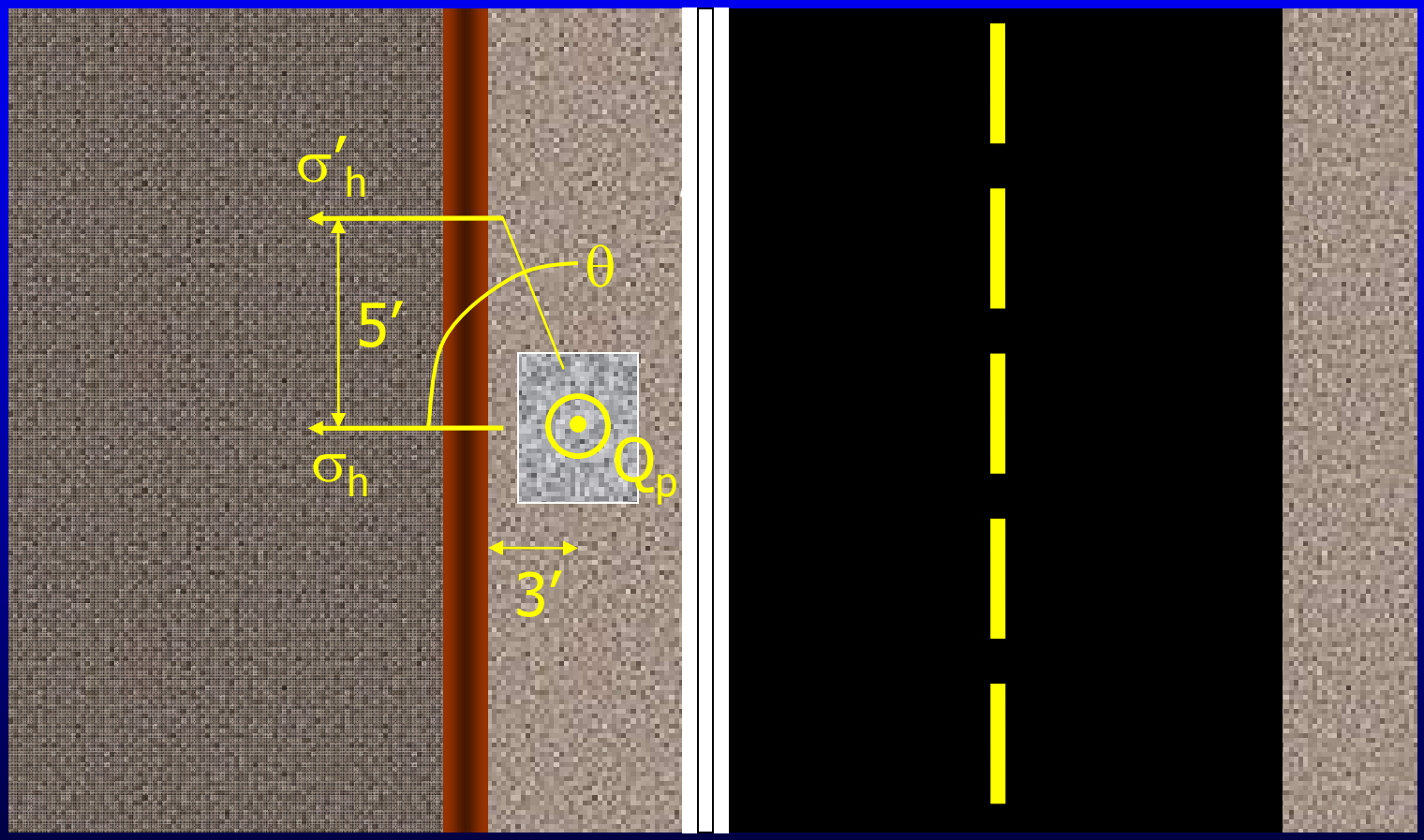

Point Loads

- Lateral Adjustment
  - $\sigma_h' = \sigma_h \cos^2[(1.1)\theta]$
  - $\sigma_h' = 22.5 \cos^2[(1.1)\text{atan}(5/3)]$
  - $\sigma_h' = 4.0$ psf

Summing up Surcharges

- Surcharges are additive

$\sigma_{Strip} + \sigma_{Line} + \sigma_{Point} = \sigma_{Total}$

162.5 + 9.5 + 22.5 = 194.5 psf

Summing up Surcharges

- Surcharges are additive

$\sigma_{Strip} + \sigma_{Line} + \sigma_{Point} = \sigma_{Total}$

162.5 + 9.5 + 22.5 = 194.5 plf

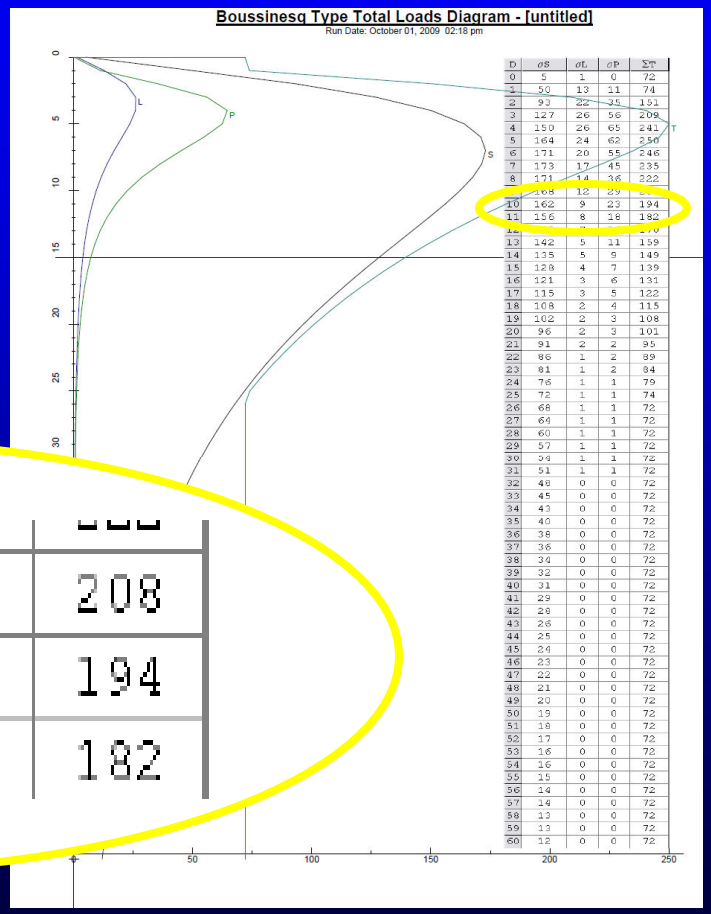

D	σS	σL	σP	ΣT
0	5	1	0	72
1	50	13	11	74
2	93	22	35	151
3	127	26	56	209
4	150	26	65	241
5	164	24	62	250
6	171	20	55	246
7	173	17	45	235
8	171	14	36	222
9	168	12	29	208
10	162	9	23	194
11	156	8	18	182
12	149	6	14	170
13	142	5	11	159
14	135	5	9	149
15	128	4	7	139
16	121	3	6	131
17	115	3	5	122
18	108	2	4	115
19	102	2	3	108
20	96	2	3	101
21	91	2	2	95
22	86	1	2	89
23	81	1	2	84
24	76	1	1	79
25	72	1	1	74
26	68	1	1	72
27	64	1	1	72
28	60	1	1	72
29	57	1	1	72
30	54	1	1	72
31	51	1	1	72
32	48	0	0	72
33	45	0	0	72
34	43	0	0	72
35	40	0	0	72
36	38	0	0	72
37	36	0	0	72
38	34	0	0	72
39	32	0	0	72
40	31	0	0	72
41	29	0	0	72
42	28	0	0	72
43	26	0	0	72
44	25	0	0	72
45	24	0	0	72
46	23	0	0	72
47	22	0	0	72
48	21	0	0	72
49	20	0	0	72
50	19	0	0	72
51	18	0	0	72
52	17	0	0	72
53	16	0	0	72
54	16	0	0	72
55	15	0	0	72
56	14	0	0	72
57	14	0	0	72
58	13	0	0	72
59	13	0	0	72
60	12	0	0	72

9	168	12	29	208
10	162	9	23	194
11	156	8	18	182

Identifying Surcharges

Look at the following pictures

What surcharges should be considered?

WINTER TRAINING 2010

WINTER TRAINING 2010

WINTER TRAINING 2010

WINTER TRAINING 2010

WINTER TRAINING 2010

Last one

Resources

- Trenching and Shoring Manual
- Trenching and Shoring Program
- Boussinesq Strip Loading Spreadsheet

Surcharges

- What is a surcharge
- When is it applied
- Types of Surcharges
- How to Calculate a Surcharge

Questions?

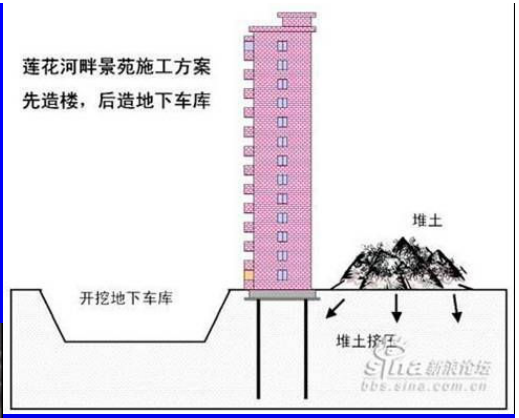

创造世界房屋倒塌奇迹

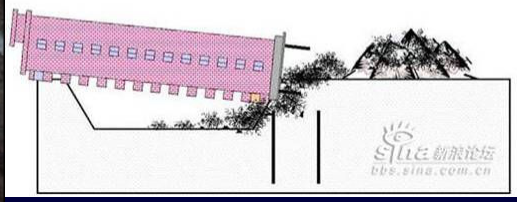

Sheet Piles

Instructor: Margie Perez

(619)688-1433

Overview

- Introduction
- Applications of Sheet Piling
- Sample Problem using AASHTO method and general design parameters
- Same sample problem using computer program
- Construction Considerations
- Advantages/Disadvantages of Sheet Piles
- Summary

Introduction

- Sheet Piles can be made from a variety of materials
  - Steel, concrete, vinyl, plastic, wood, fiberglass

Introduction

- Consists of a series of panels with flattened Z-shaped interlocking connections
- Panels are driven into the ground with impact or vibratory hammers
- Sheet Piles keep earth or water out of an excavation

Introduction

Introduction

Introduction

Application of Sheet Piles

- The following are some of the more common geotechnical and environmental applications in which sheet piling is effective
  - Retaining walls
  - Cofferdams
  - Containment walls
  - Ground water diversion/control
  - Flood protection
  - Coastal protection
  - Slope stabilization

Application of Sheet Piles

- Cantilevered walls for H $\leq$ 15′
- Anchored walls for H up to 35′

Application of Sheet Piles

Anchored Walls for H up to 35’

Application of Sheet Piles

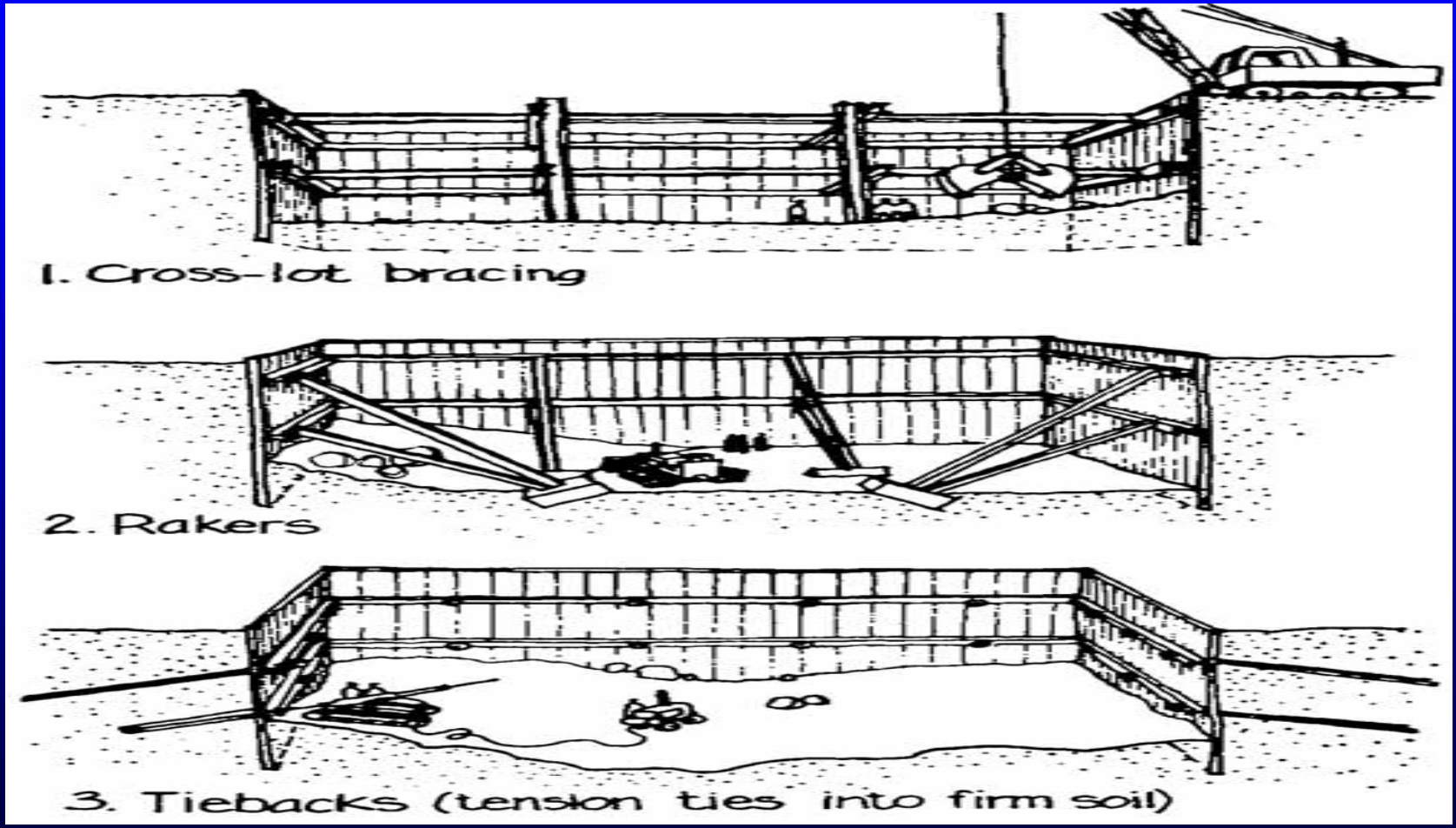

Application of Sheet Piles

Example Problem

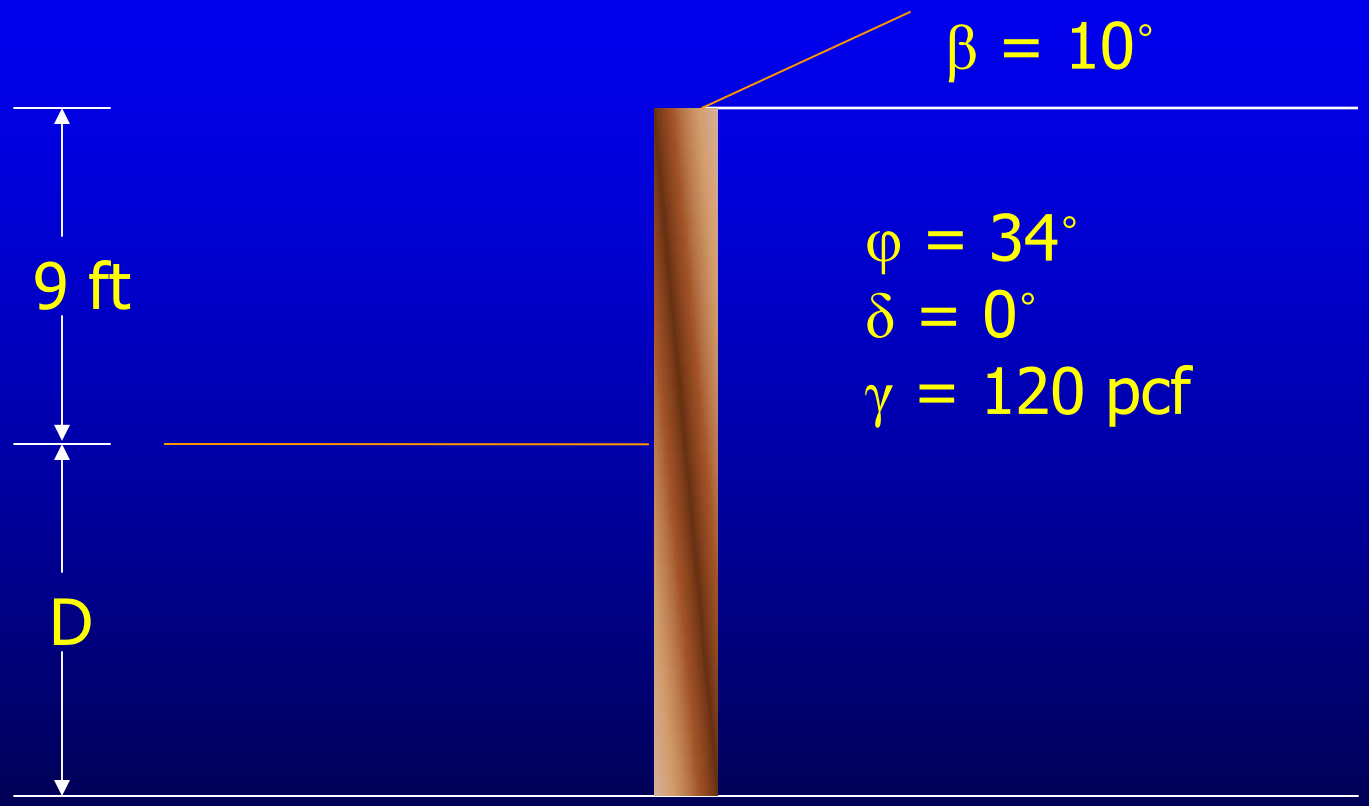

Problem Outline

- Calculate K_a , K_p using soil parameters
- Develop soil pressure diagram
- Determine minimum beam embedment using Factor of Safety = 1.3
- Check structural capacity of the system

Example Problem- Soil Parameters

$$K_a = \frac{\cos^2\varphi}{\cos\delta\left(1+\sqrt{\frac{\sin(\varphi+\delta)\times\sin(\varphi-\beta)}{(\cos\delta)(\cos\beta)}}\right)^2}$$

$$\varphi = 34°, \delta = 0°, \beta = 10°$$

$$K_a = 0.314$$

Example Problem

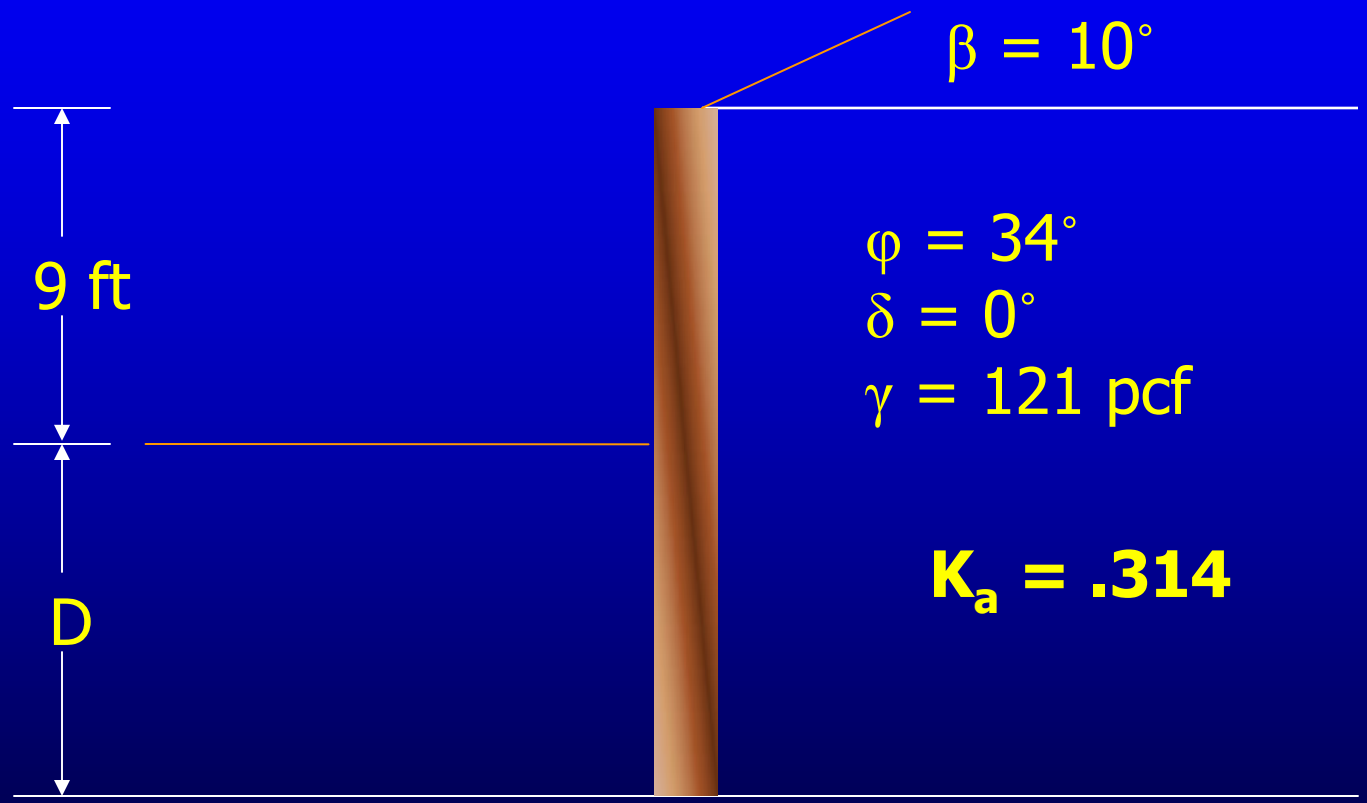

Example Problem- Soil Parameters

Find K_p using the Log-Spiral Method

$$\frac{\beta}{\phi} = \frac{0°}{34°} = 0°$$

K_p(chart)=9.44

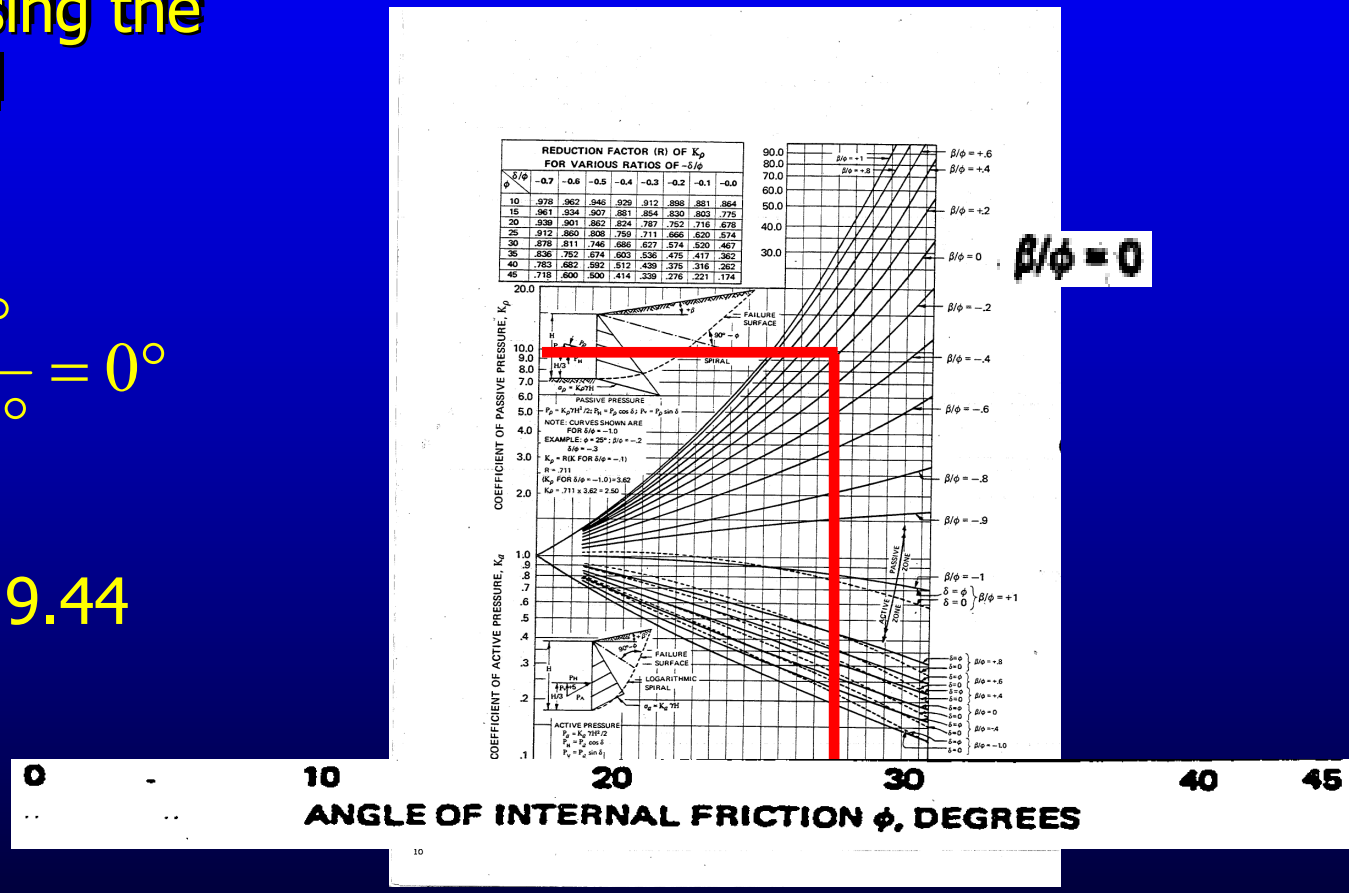

Example Problem- Soil Parameters

$$\frac{\delta}{\phi} = \frac{0°}{34°} = 0°$$

Reduction Factor, R=0.383

$K_p = RK_p$ (chart)

$K_p = (0.383)(9.44)$

$K_p = 3.616$

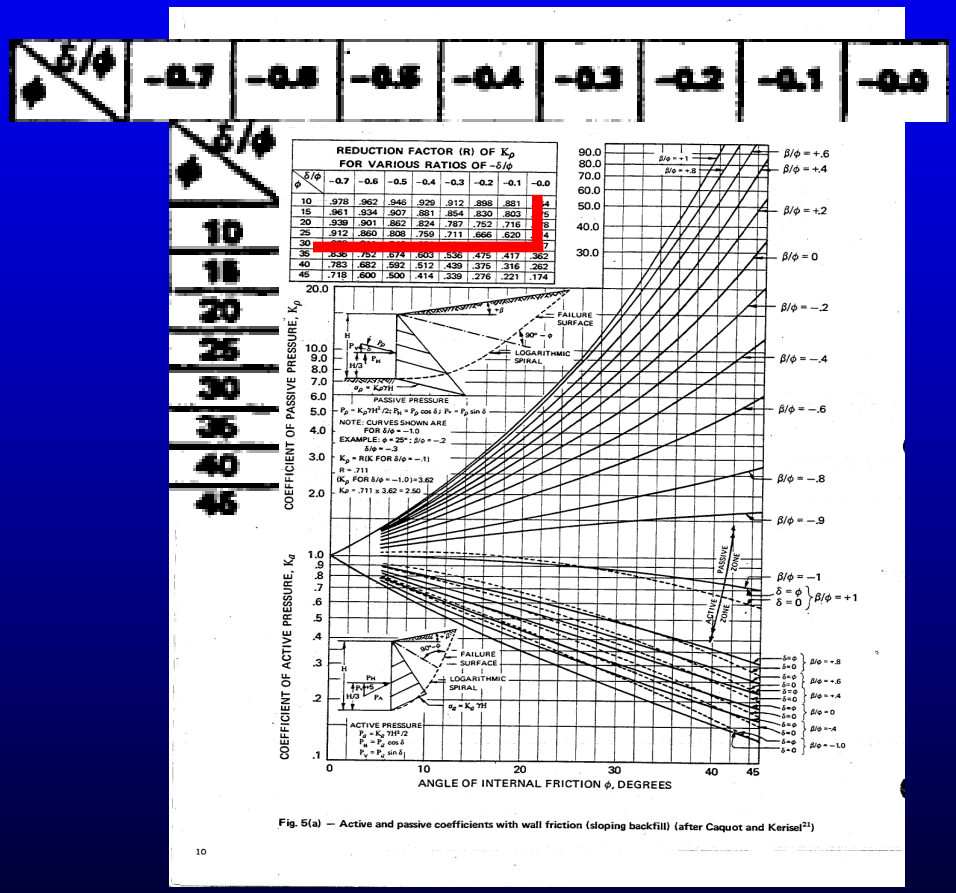

Example Problem

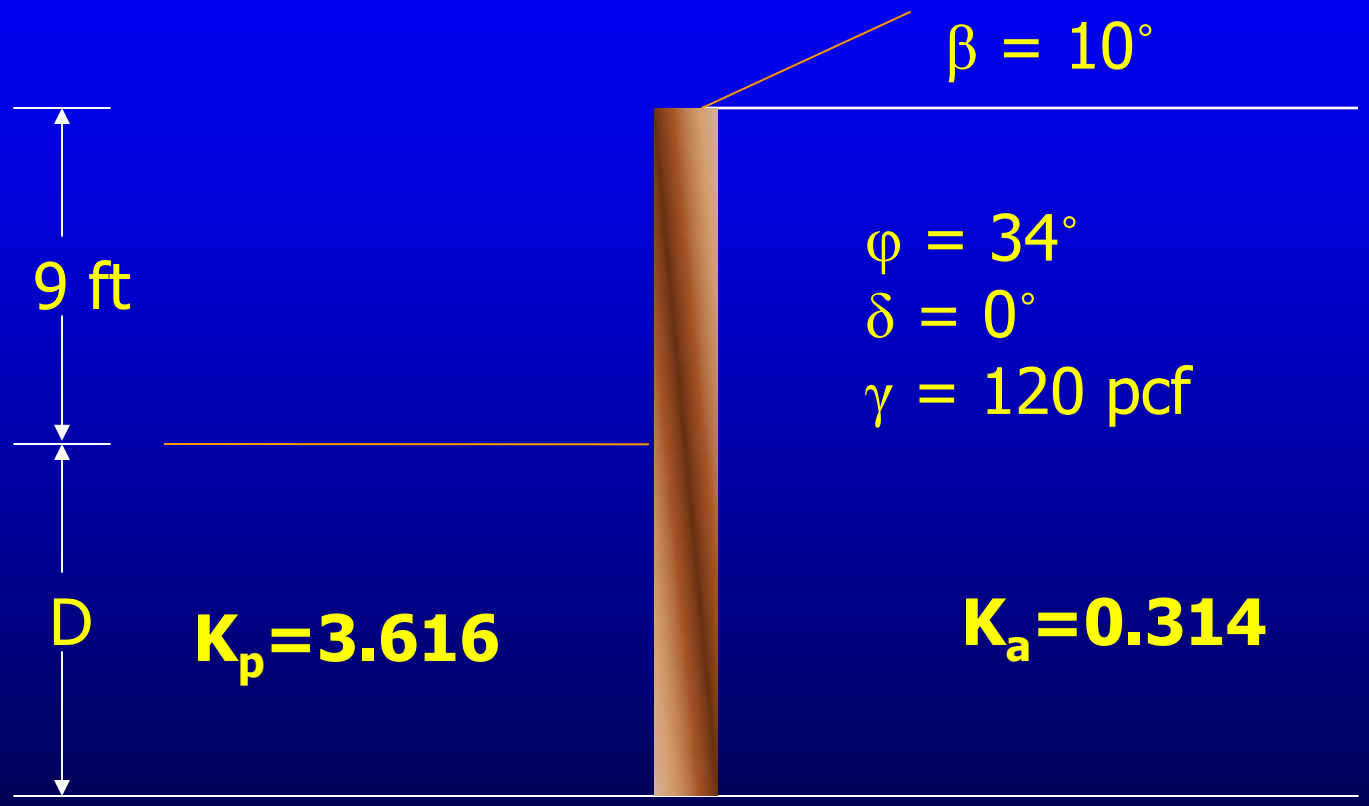

Example Problem - Pressures

Note: Surcharge height is limited to depth of excavation or 10' whichever is less.

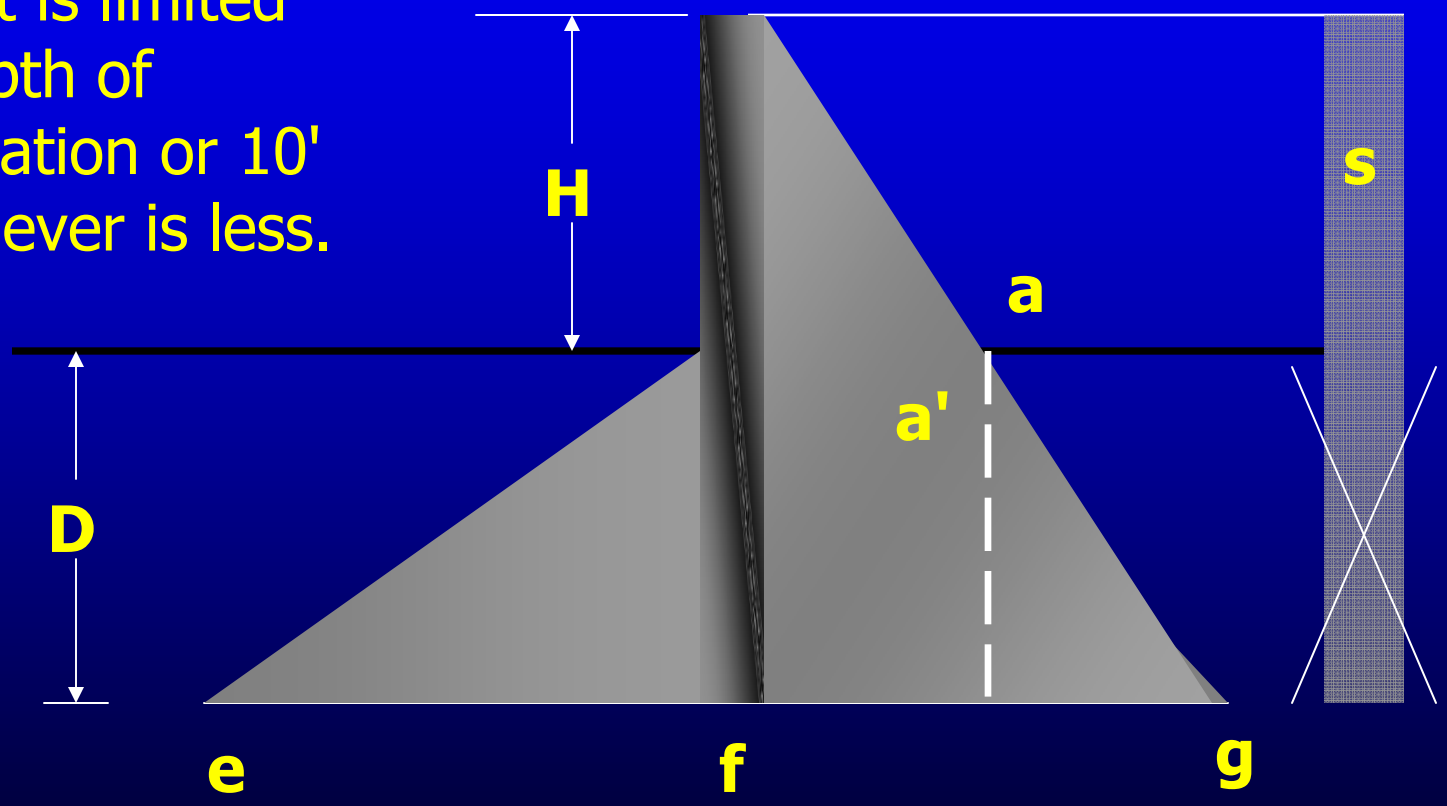

Example Problem - Pressures

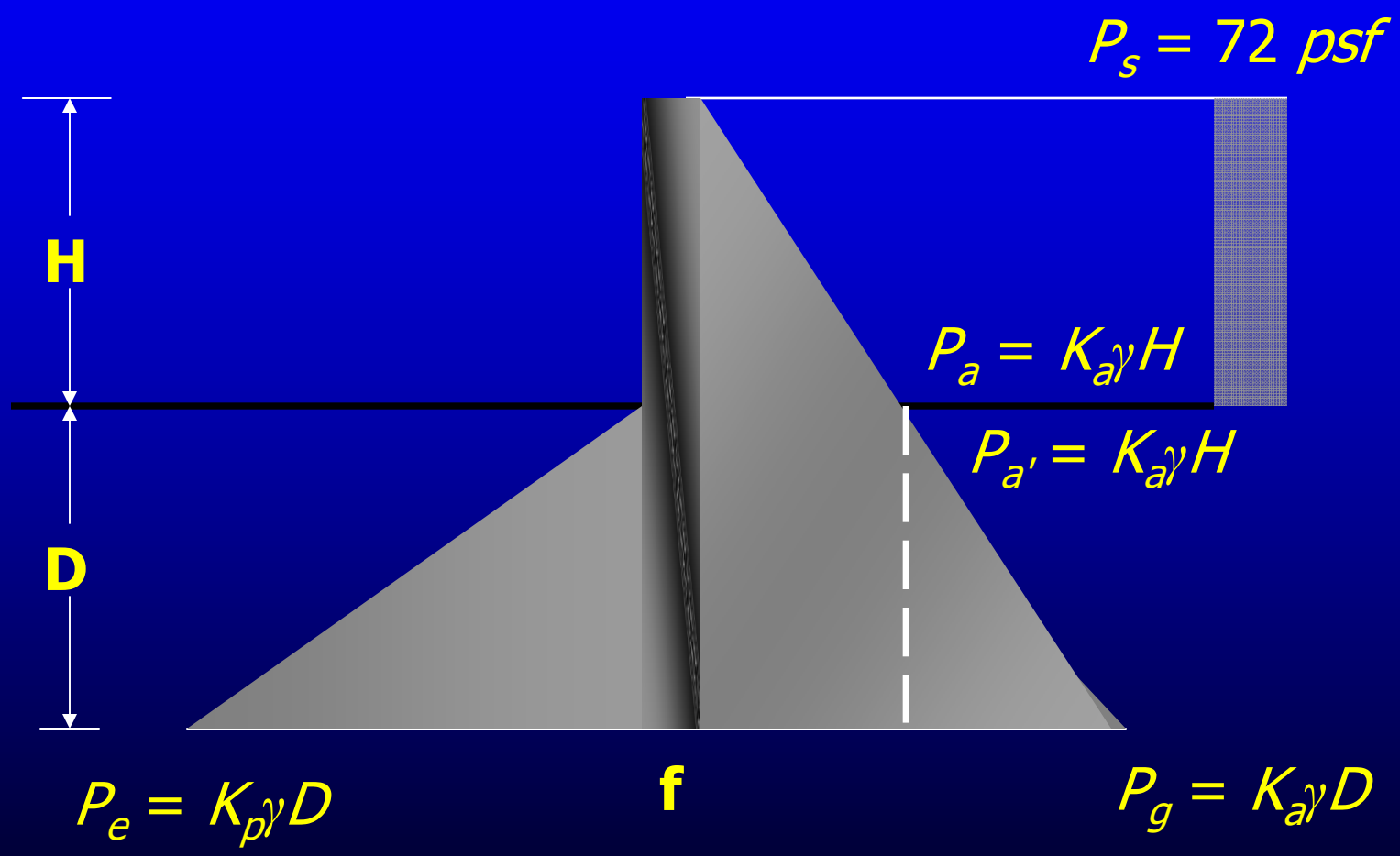

Example Problem - Pressures

$P_a = K_a \gamma H$

$P_a = (0.314)(120 pcf)(9 ft)$

$P_a = 339\ psf$

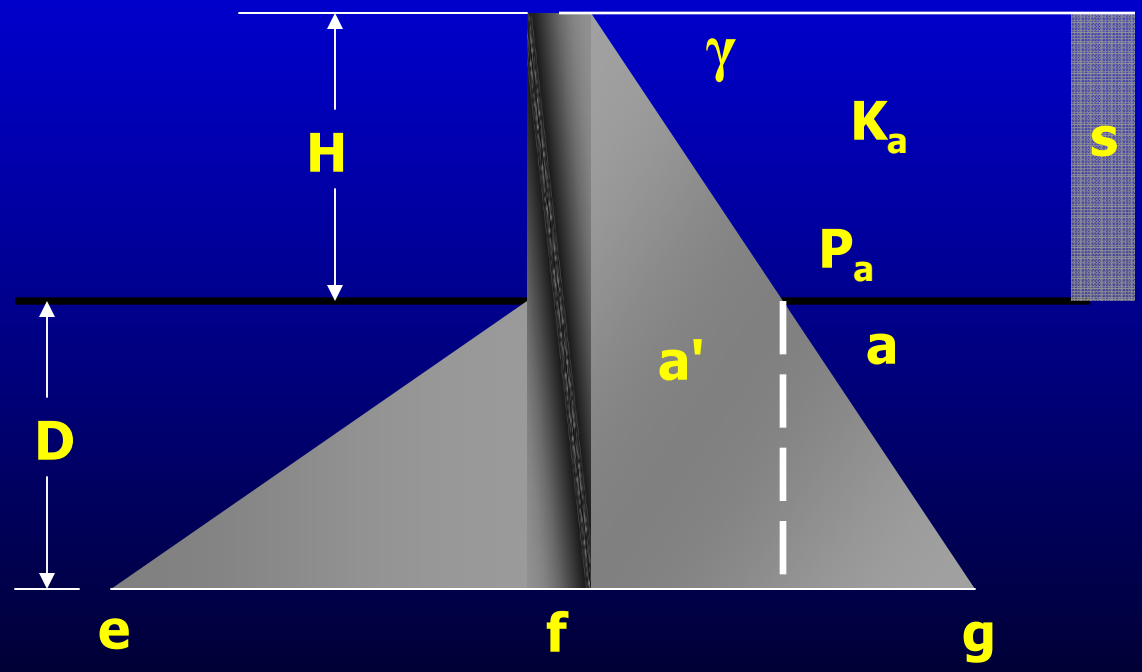

Example Problem - Pressures

$P_{a'} = K_a \gamma H$

$P_{a'} = (0.314)(120 pcf)(9)$

$P_{a'} = 339\ psf$

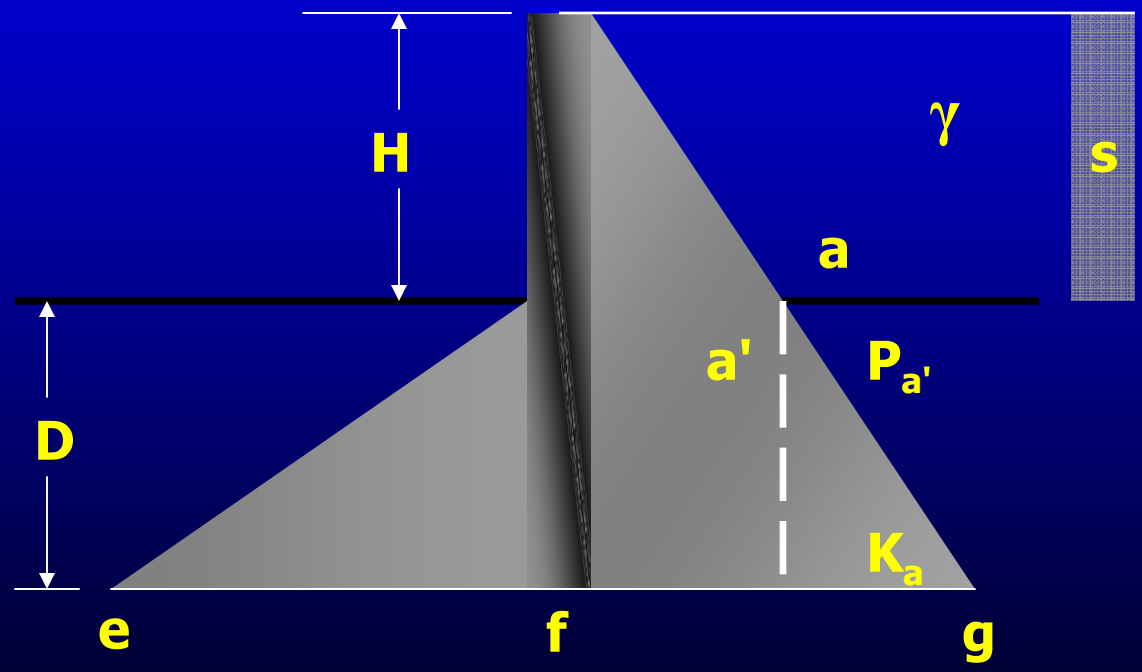

Example Problem – Pressures

$$P_g = K_a \gamma D$$

$$P_g = (0.314)(120\,pcf)(D)$$

$$P_g = 37.7\,D\ psf$$

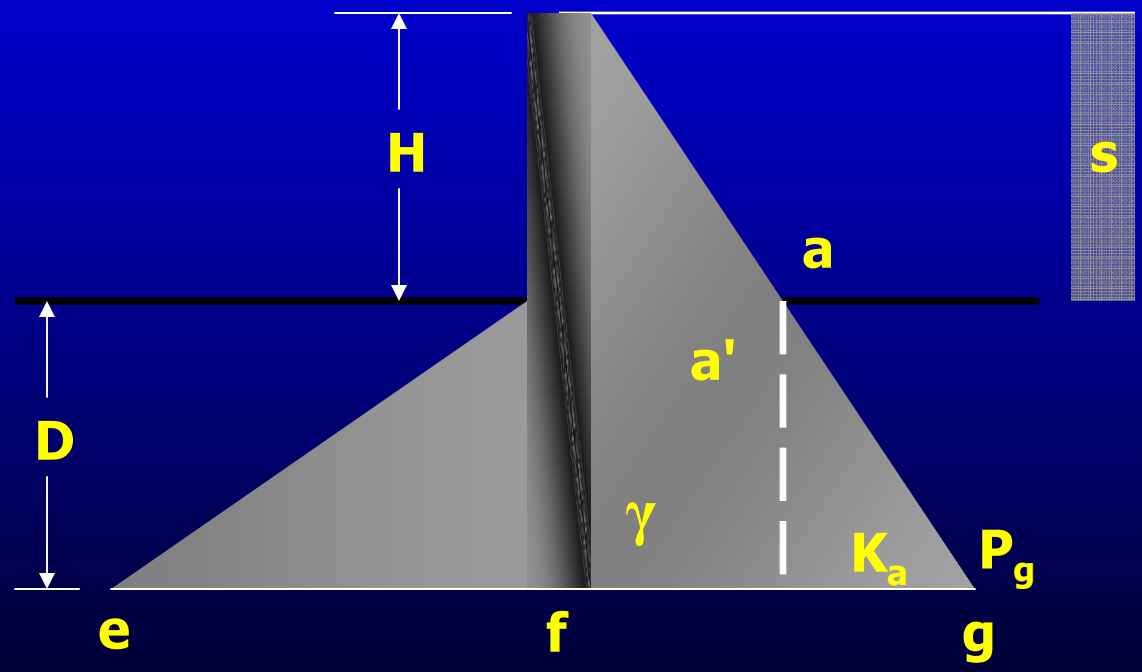

Example Problem – Pressures

$P_e = K_p \gamma D$

$P_e = (3.616)(120 pcf)(D)$

$P_e = 434 D \ psf$

$P_s = 72 \ psf$

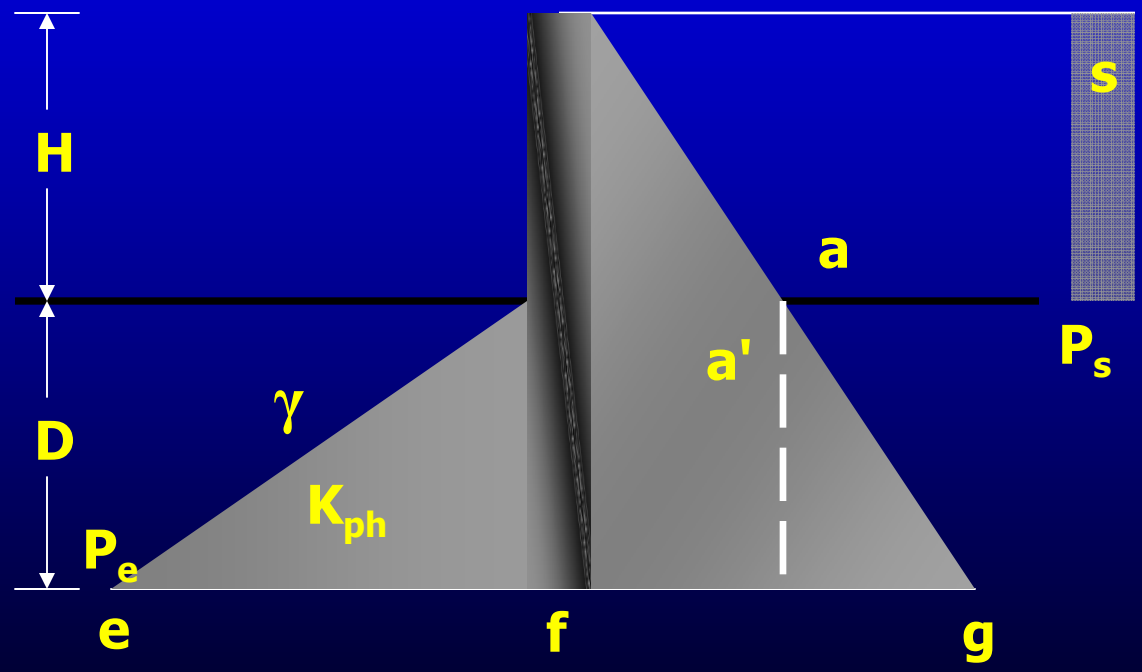

Example Problem – Forces

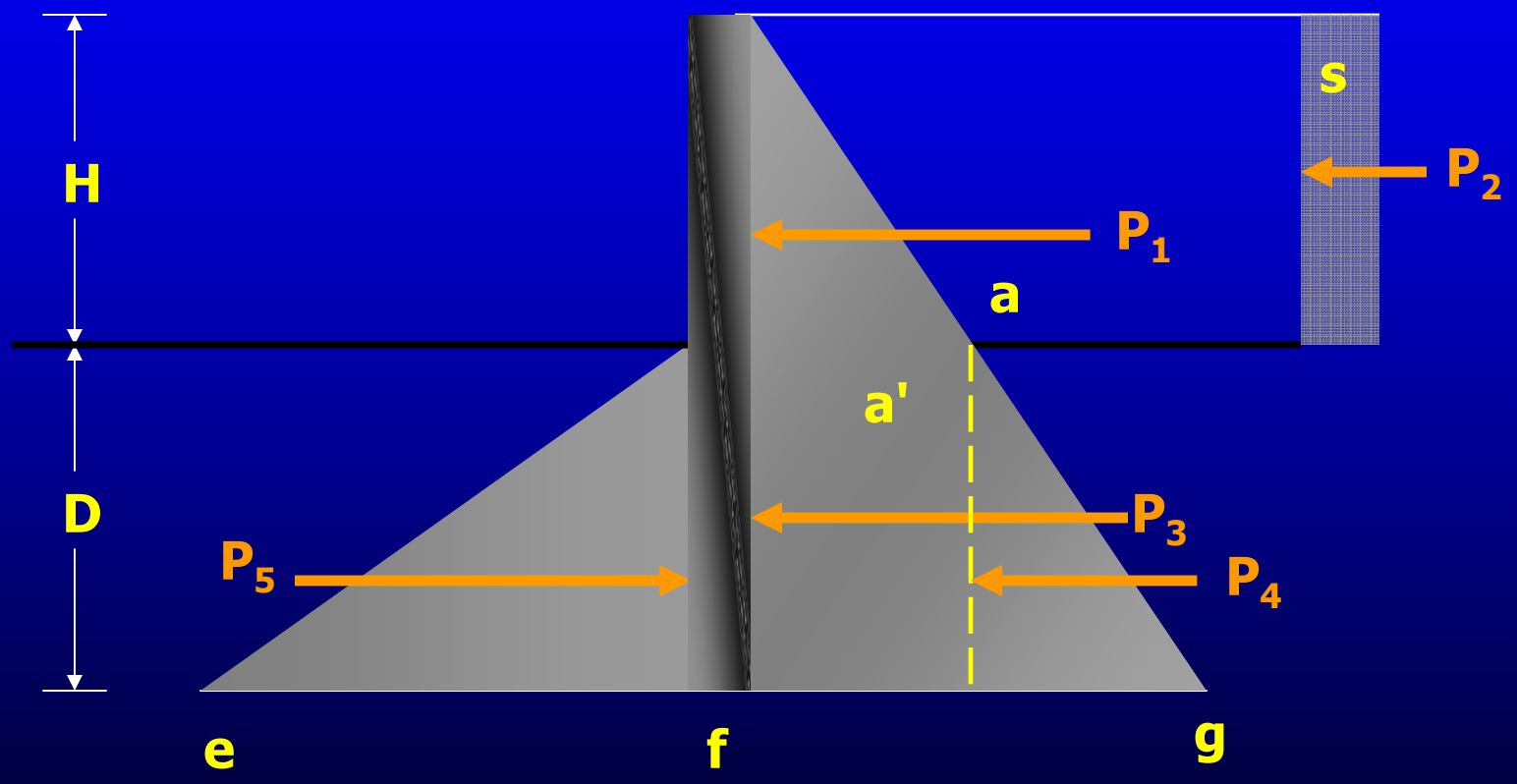

Example Problem – Forces

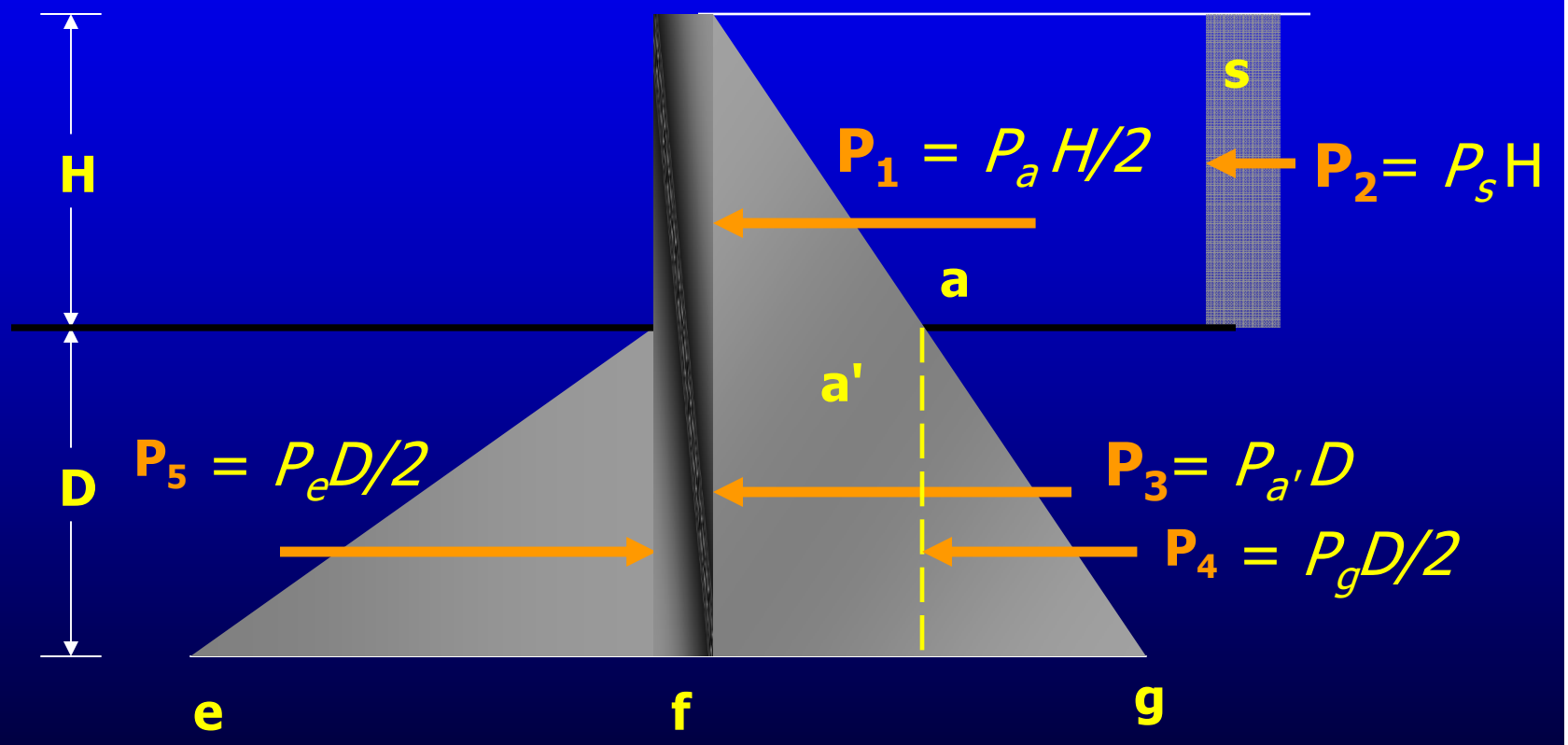

Example Problem – Forces

$P_1 = P_a H/2$

$P_1 = (339)(9ft)/2$

$P_1 = 1526\ \#$

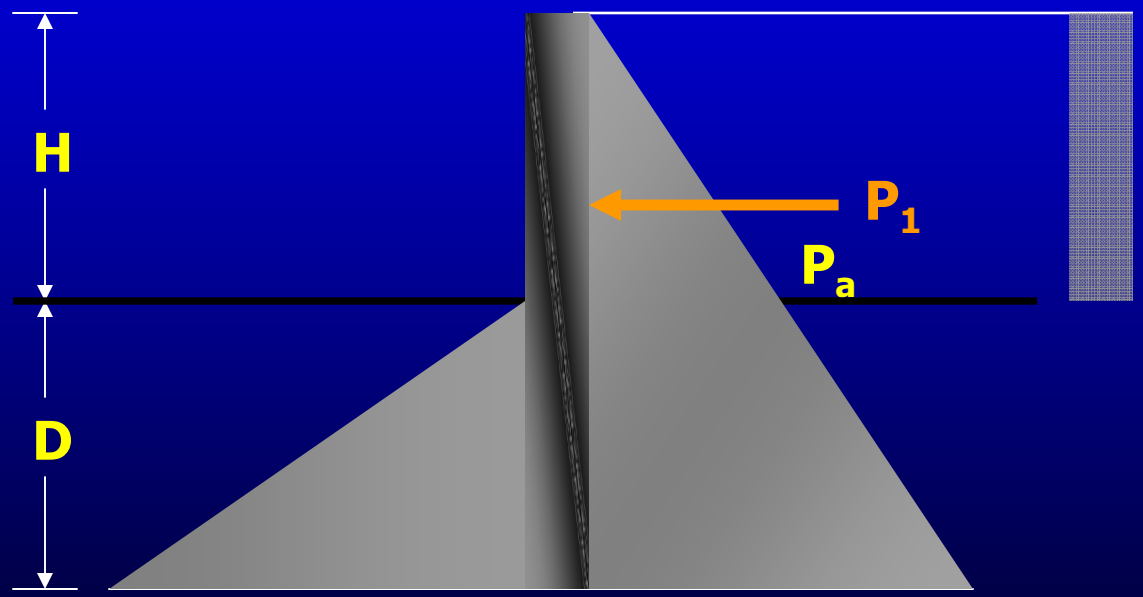

Example Problem – Forces

$P_2 = P_s H$

$P_2 = (72)(9)$

$P_2 = 648\ \#$

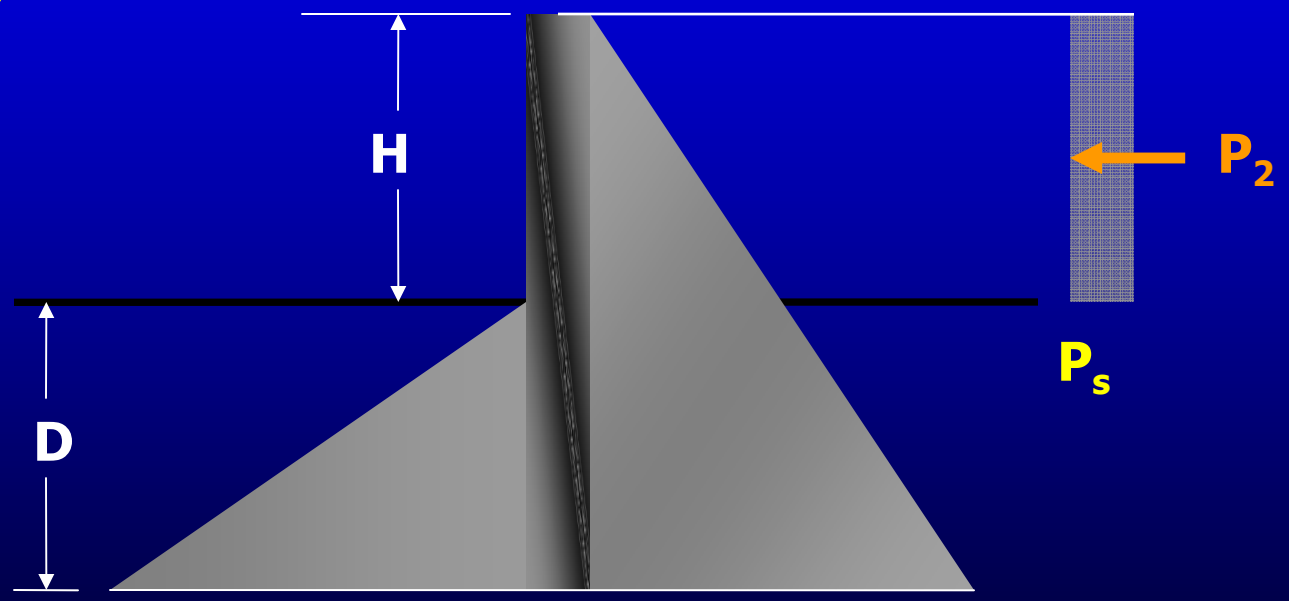

Example Problem – Forces

$P_3 = P_{a'} D$

$P_3 = (339)(D)$

$P_3 = 339D$ #

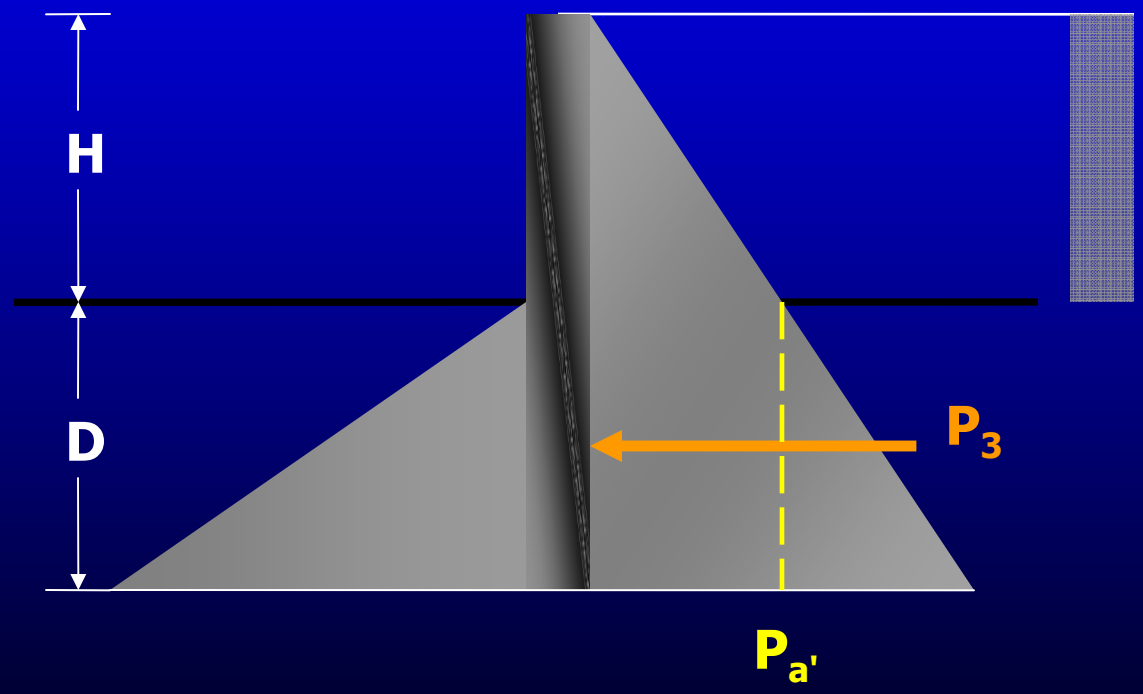

Example Problem – Forces

$P_4 = P_g D/2$

$P_4 = (37.7D)(D)/2$

$P_4 = 18.8D^2$ #

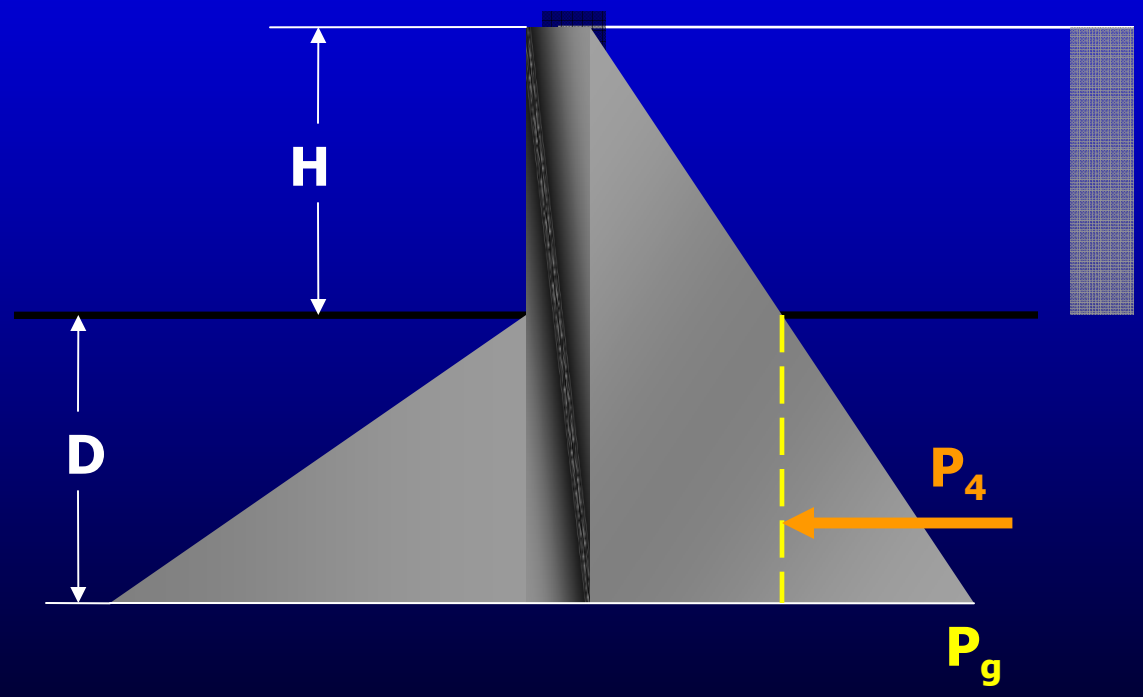

Example Problem – Forces

$P_5 = P_e D/2$

$P_5 = (434D)(D/2)$

$P_5 = 217D^2$ #

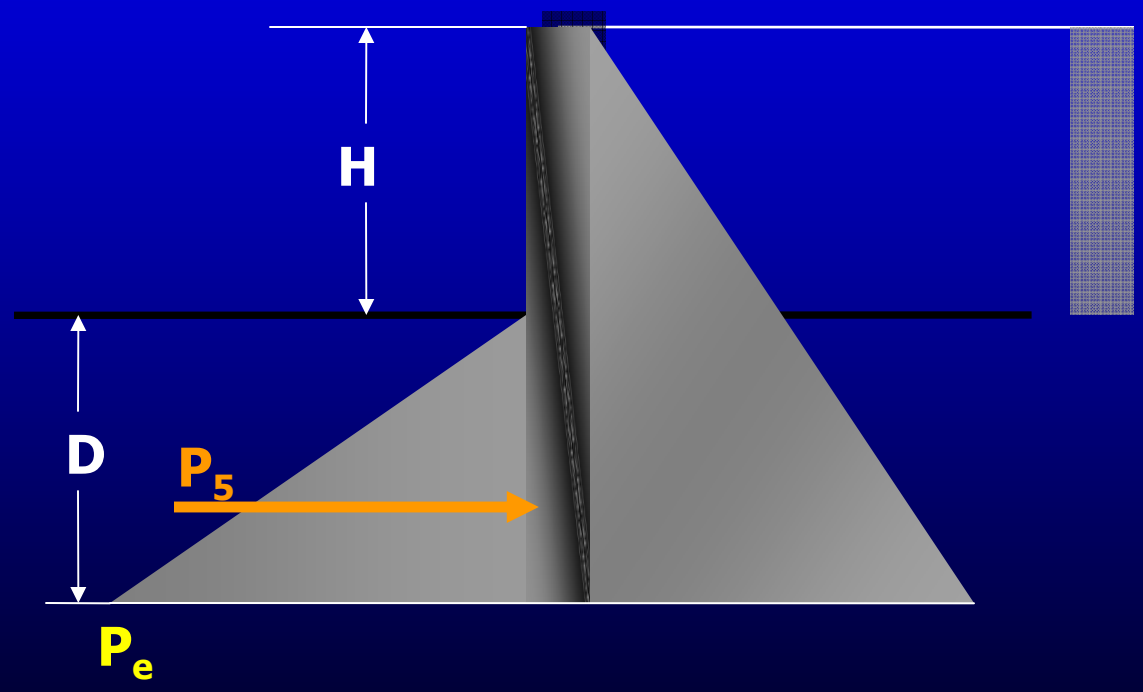

Example Problem – Forces

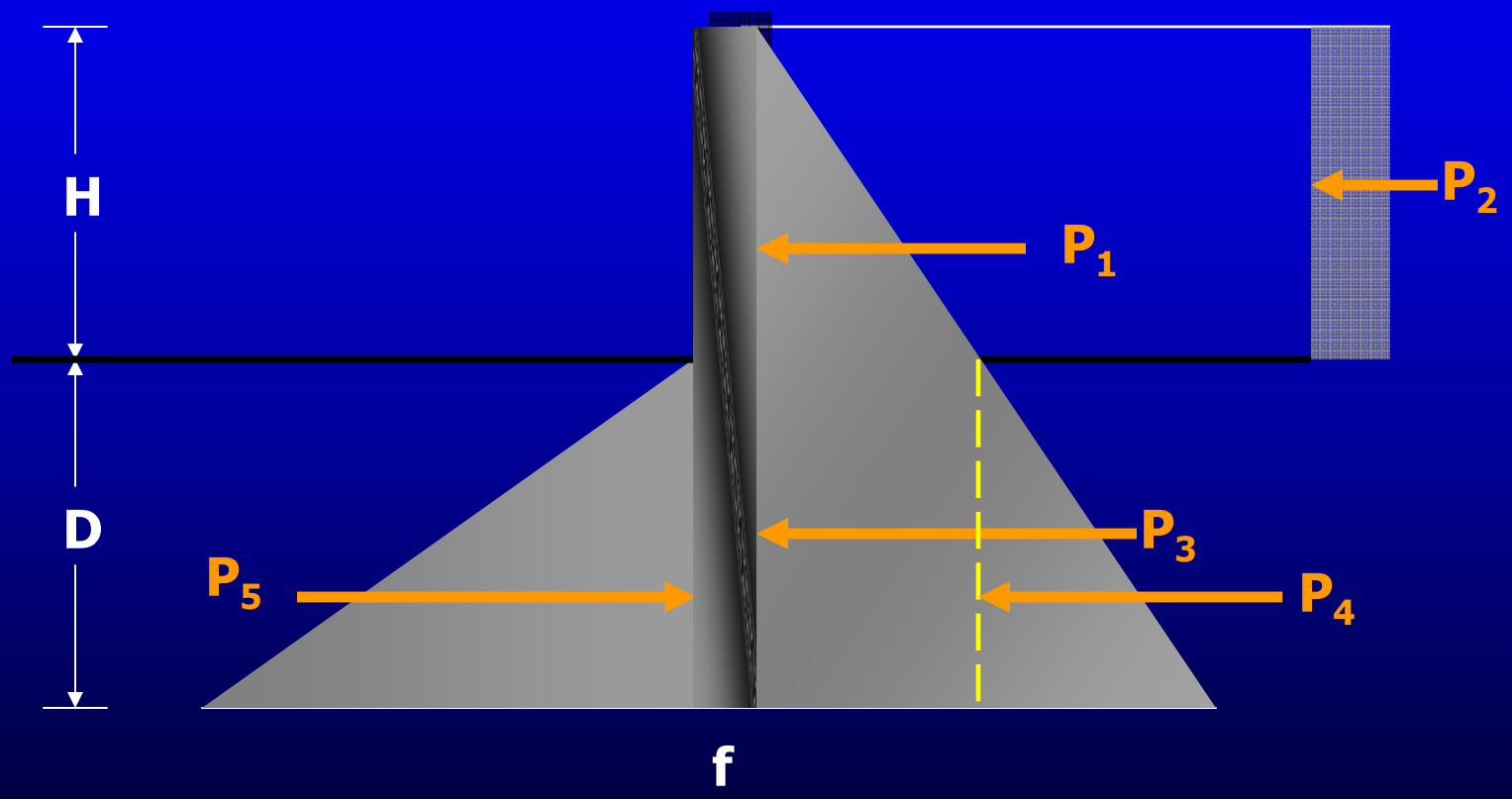

Factor of Safety

$$M_{Resistance} = 1.3\ (M_{Driving})$$

Example Problem – Calculate Minimum Embedment

$$\sum M = 0:$$

$$P_1(D + H/3)1.3 + P_2(D + H/2)1.3 +$$

$$P_3(D/2)1.3 + P_4(D/3)1.3 - P_5(D/3) = 0$$

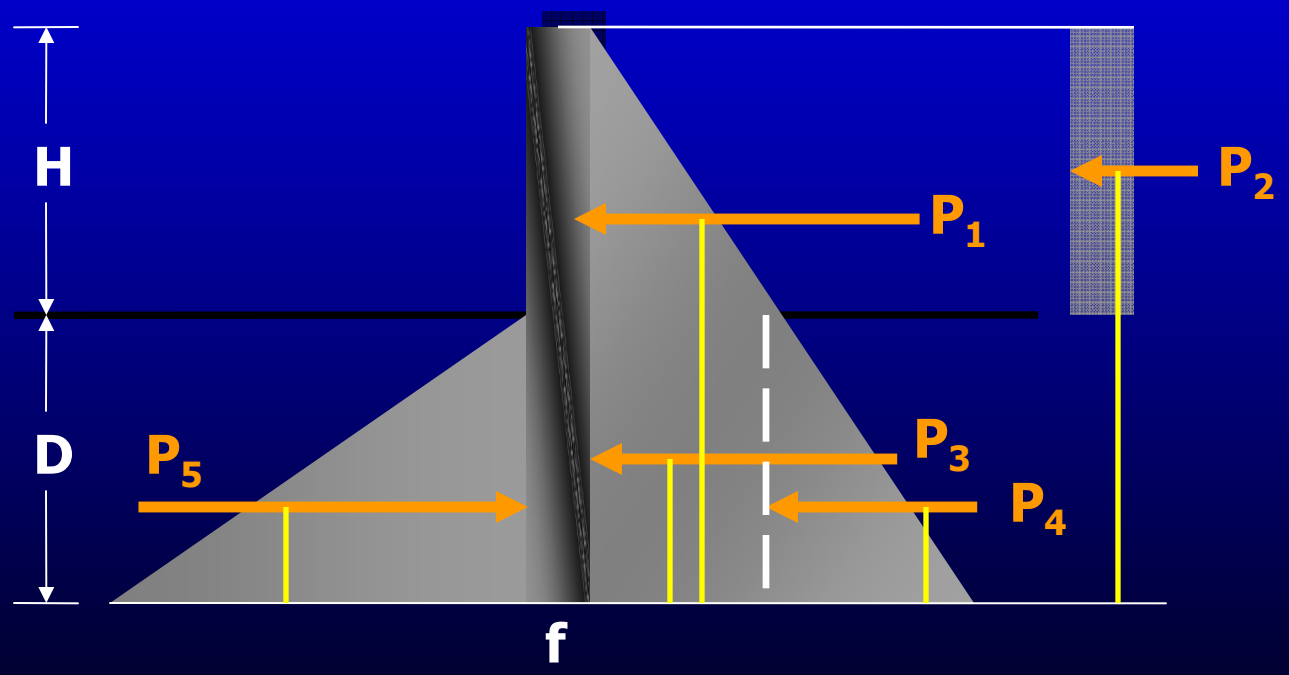

Example Problem – Calculate Minimum Embedment

$$\sum M = 0:$$

$$1{,}526(D + 9/3)(1.3) + (648)(D + 9/2)1.3$$

$$+ 339D(D/2)1.3 + 18.8D^2(D/3)1.3$$

$$- 217D^2(D/3) = 0$$

Example Problem – Calculate Minimum Embedment

$$\sum M = 0:$$

$$49.3D^3 - 169.5D^2 - 2{,}174D - 8142 = 0$$

D = <u>9.7 *ft*</u>, $D_{1.2}$ = <u>*11.6 ft*</u>

In comparison if we had used a 1.3 Factor of Safety applied to the calculated D without increasing the driving moment:

$$D = 1.3(8.2) = 10.7\,ft \cong 11\,ft$$

Example Problem– Calculate Point of Zero Shear, X

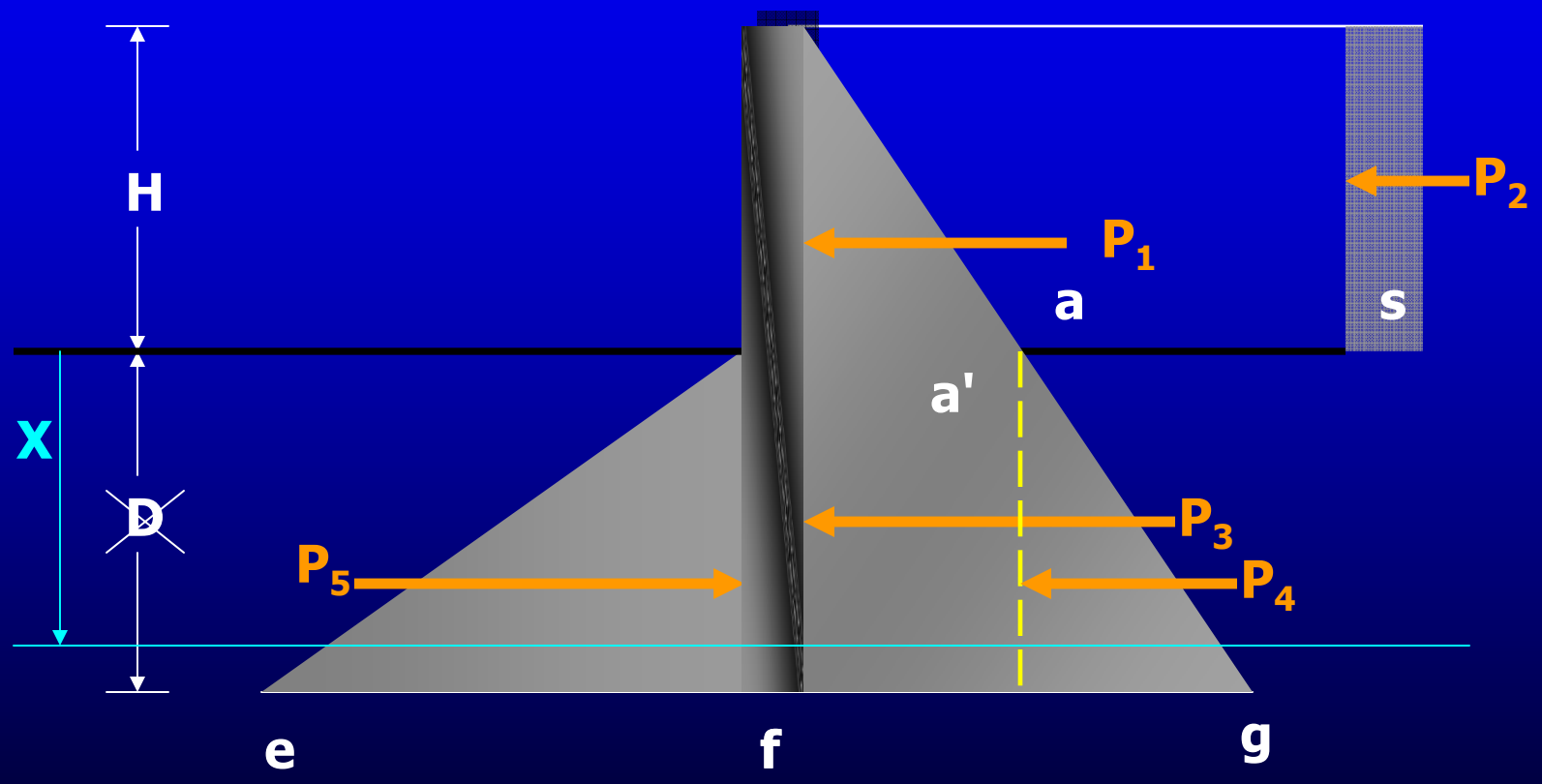

Example Problem– Calculate Point Of Zero Shear, X

- Use X in lieu of D
- $P_1+P_2+P_3+P_4=P_5$
- $1{,}526 + 648 + 339X + 18.8X^2 = 217X^2$
- $198.2X^2 - 339X - 2174 = 0$
- X = <u>4.28 *ft*</u>

Example Problem – Calculate Maximum Moment At X

$$M_{\max} = P_1(X + H/3) + P_2(H/2 + X) + P_3(X/2) + P_4(X/3) - P_5(X/3)$$

$$M_{\max} = \underline{14{,}724\ ft - lb}$$

Example Problem – Calculate Section Modulus

$$S = \frac{M}{f_b}$$

$$S = \frac{(14{,}724\, ft - lb)(12\, {}^{in}\!/_{ft})}{25{,}000\, psi}$$

$$S = \underline{7.07 in^3}$$

Example Problem – Calculate Section Modulus

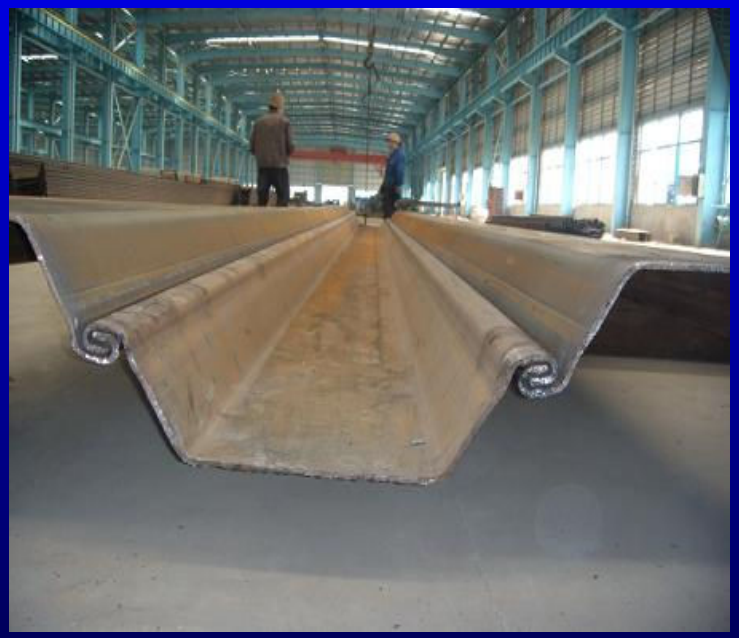

BETHLEHEM STEEL CORPORATION STEEL SHEET PILING

Type	Width (in)	Weight per ft of pile (Lb)	Weight per sq ft of wall (Lb)	S per ft of wall (in^3/LF)	I** (in^4)
PZ22	22.0	40.3	22.0	18.1	154.7
PZ27	18.0	40.5	27.0	30.2	276.3
PZ35	22.6	66.0	35.0	48.5	681.5
PZ40	19.7	65.6	40.0	60.7	805.4
PLZ25	24.0	49.6	24.8	32.8	446.5
PSA23	16.0	30.7	23.0	2.4	5.5
PS27.5	19.7	45.1	27.5	2.0	5.3
PS31	19.7	50.9	31.0	2.0	5.3

** Note: The moment of inertia (I) listed on this sheet is per pile.

Example Problem – Calculate Section Modulus

- Minimum grade of steel is A328, for which F_b=25ksi
- Most suppliers also furnish high strength steel, such as A572(grade 50) F_b=30ksi
- Bethlehem Steel also manufactures A690 for which F_b=41ksi. For sheet piles manufactured prior to 1940 or those with no identified grade of steel, use F_b=22ksi (A36 equivalent)

Computer Program

CT-TRENCHING & SHORING CHECK PROGRAM

DATA INPUT TABLE:

Soil Geometry Input Data per soil layer:

Layer	Thick.	ϕ	δ	γ	Coh	Method to Calculate K	
	ft	°	°	pcf	psf	Active	Passive
1	26.50	34.00	0.00	120.00	0	Coulomb	Log Spiral

Ground Water present? : No Factor of Safety 'FOS': 1.30

Groundline Slope behind Wall 'β': 10° Mudline Slope in front of Wall 'β'': 0°

MISCELLANEOUS INPUT DATA:

Excavation Height 'H': 9 ft Embedment Depth 'D': TBD

Ground Water present? : No Factor of Safety 'FOS': 1.30

Groundline Slope behind Wall 'β': 10° Mudline Slope in front of Wall 'β'': 0°

SURCHARGE LOAD INPUT DATA

Minimum Uniform Surcharge Load: 72 psf

Depth of Minimum Uniform Surcharge Load: 9 ft

Computer Program

Calculated Embedment Depth (@ FOS=1.30) 'D$_{1.2}$': 11.58 ft (Depth factor ~~= 1.2~~)

D = 9.7 *ft*, D$_{1.2}$ = *11.6 ft*

(User inputs soil geometry per soil layer)

NOT INTENDED FOR TRENCHING AND SHORING DESIGN PURPOSES

CALCULATED RESULTS

PRESSURE COORDINATES

Active: (2 layers)

Depth	σ_h +	σ_h −
ft	psf	psf
0.00	0.00	0.00
9.00	338.62	338.62
26.50	997.04	0.00

Passive: (1 layers)

Depth	σ_h +	σ_h −
ft	psf	psf
9.00	0.00	0.00
26.50	7592.59	0.00

Pressure

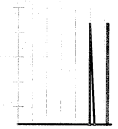

0-Shear: 4.28 ft below bottom of excavation

Maximum Moment 'M': 14,708 lb-ft @ 0-Shear

X = 4.28 *ft*

$$M_{\max} = 14{,}724\, ft - lb$$

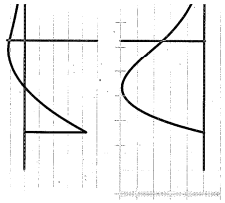

Page 2

Construction Considerations

- Before Construction
  - Review the LOTBs and Soils Report to know the type of material the Contractor will encounter
  - Check Contract Plans and Special Provisions for any pile driving specifications
  - Be aware that Contractor may have to drive a heavier pile section than the calculations call for due to difficulty in driving smaller sections – SPT/N value

Construction Considerations

- In the field
  - Check the material to insure that the proper section was delivered to the site
  - Measure the length of each section and compare with the required length
  - Insure that the Contractor follows the approved construction sequence and plans

Construction Considerations

- Tiebacks may be utilized to avoid overstress of cantilevered sheet piles

Construction Considerations

Construction Considerations

Construction Considerations

Construction Considerations

Construction Considerations

Disadvantages

- Noise and vibration during installation
- Sheet piles are not suitable for stiff clay or soil containing cobbles and boulders
- Keying into rock is not possible
- Limited depth penetration without adding to project cost

Advantages

- No excavation is required, which minimizes disposal problems
- Sheet piling can be removed later, if required or desired
- Topography and depth to groundwater have little impact
- Enclosures with irregular shapes are possible
- Work can be completed a barge, eliminating necessary site clearing

Summary

- Introduction
- Applications of Sheet Piling
- Sample Problem using AASHTO method and general design parameters
- Same sample problem using computer program
- Construction Considerations
- Advantages/Disadvantages of Sheet Piles

Questions

Soldier Piles

Instructor: Margie Perez

(619)688-1433

WINTER TRAINING 2010

Overview

- Introduction
- Components of a Soldier Pile Wall
- General Design Parameters
- Sample Problem using AASHTO method
- Same sample problem using computer program
- Construction Considerations
- Advantages/Disadvantages
- Summary

Introduction

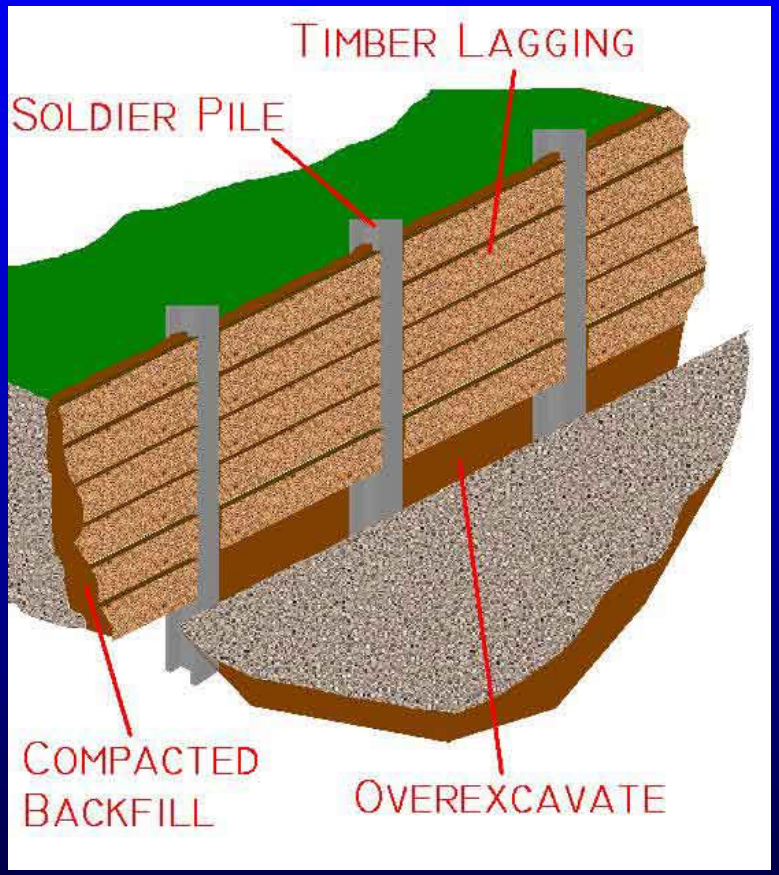

- Soldier piles and lagging walls are a cantilever system to retain soil in an excavation or trench.
- Wall is Constructed from the top down.

Introduction

- Soldier pile systems can also utilize rakers or tiebacks to reduce the embedment depth

Introduction

- If used, rakers and tiebacks will need to stay in place for the duration that the wall is required.

Components

- Soldier piles can be steel HP sections, W sections, sheet piles or CIDH piles

- Lagging can be timber members, steel plates, or concrete sections

Installation

- Soldier piles can be constructed by driving/drilling piles through the proposed excavation depth
- Drilled holes can be filled with pea gravel, slurry, concrete, or similar material

Installation

Installation

Installation

- During excavation the lagging is installed in lifts from top to bottom
- Each lift should not exceed 5’
- Lagging is commonly installed behind the soldier pile front flange
- It is not recommended to install the lagging behind the back flange
- Lagging may be wedged against the front flange for tight soil to lagging contact

Installation

Installation

Installation

General Design Parameters

- Soldier piles provide the moment resistance for the system
- Passive soil resistance is obtained by embedding the soldier piles beneath the excavation grade
- The lagging bridges and retains soil across the piles and transfers the lateral load to the soldier pile system
- Soil arching redistributes the soil pressure from the center of the lagging to the stiffer soldier piles

General Design Parameters

- Soil Arching helps to transmit the lateral loads from the soil behind and along the cut faces to the vertical corners

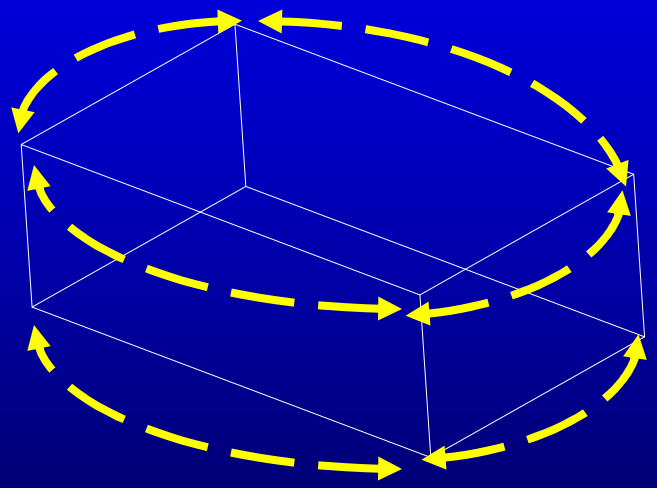

General Design Parameters

- Lagging Design Load = 0.6 (Shoring Design Load)
- Maximum lagging load may be 400 psf without surcharges

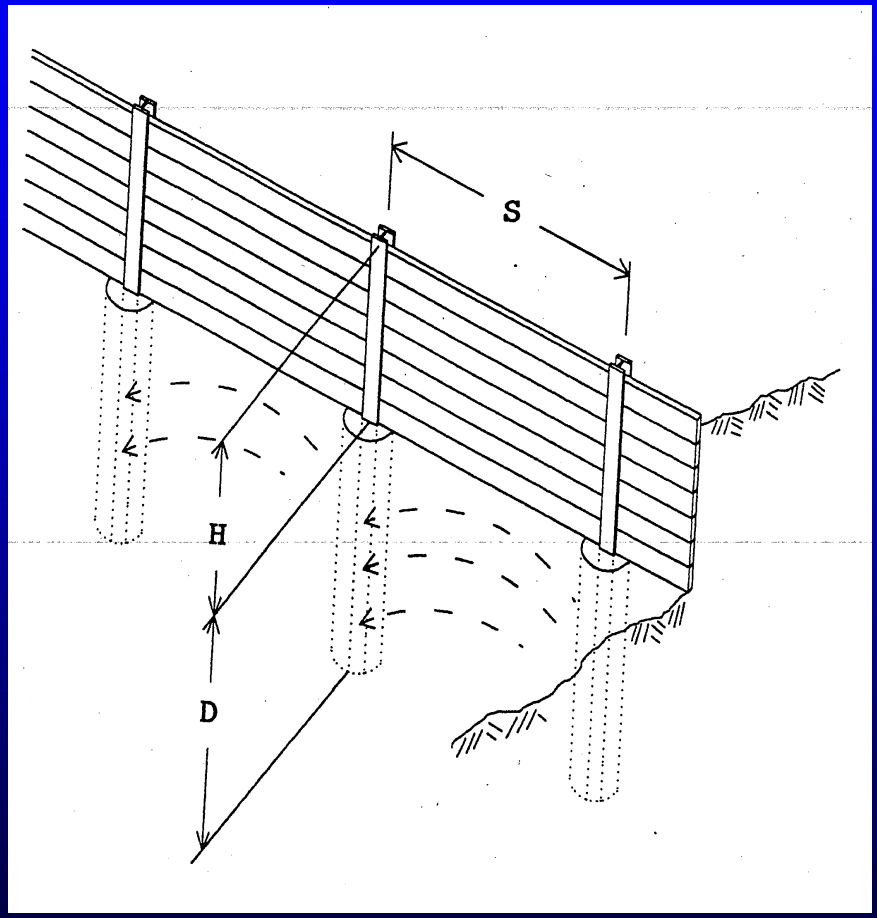

General Design Parameters

$$f'_{c\perp} = \frac{P}{A} \leq F'_{c\perp}$$

Where $f'_{c\perp}$ = Actual Bearing Stress

$F'_{c\perp}$ = Allowable Bearing Stress

$F'_{c\perp}$ = 450 psi in accordance with Section 51-1.06A(2) "Design Stresses"

General Design Parameters

- Effective Width
  - For soldier piles backfilled with material other than concrete only the dimension of the soldier pile parallel to the drilled or driven hole can be used

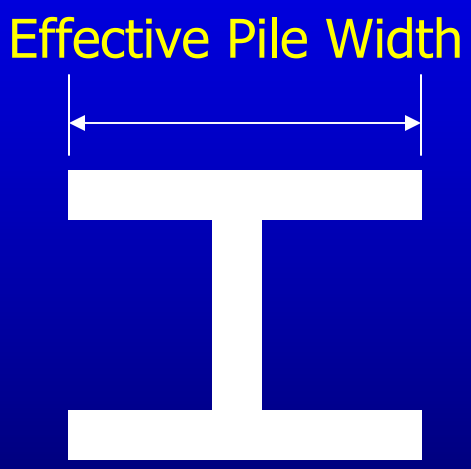

General Design Parameters

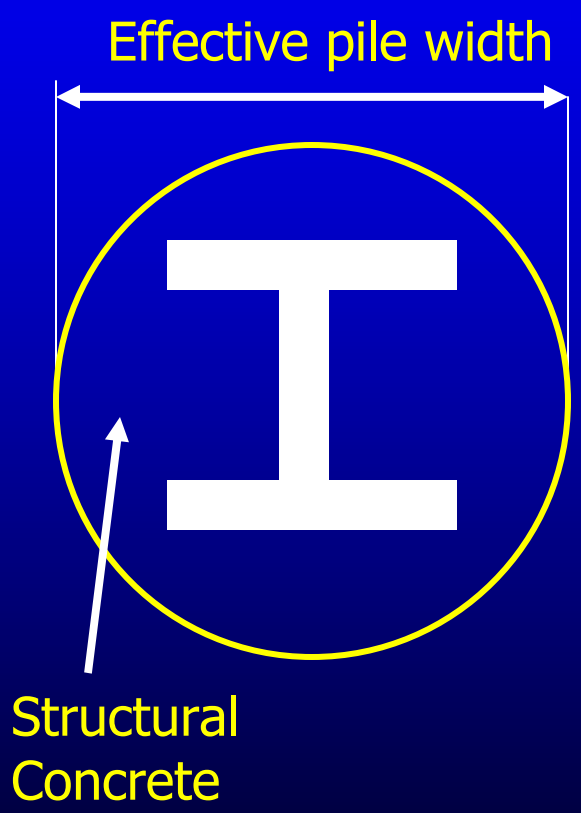

- Effective Width
  - If soldier piles are backfilled with structural concrete than the effective width is the hole diameter
  - Structural concrete is generally a 4-sack or greater mix

General Design Parameters

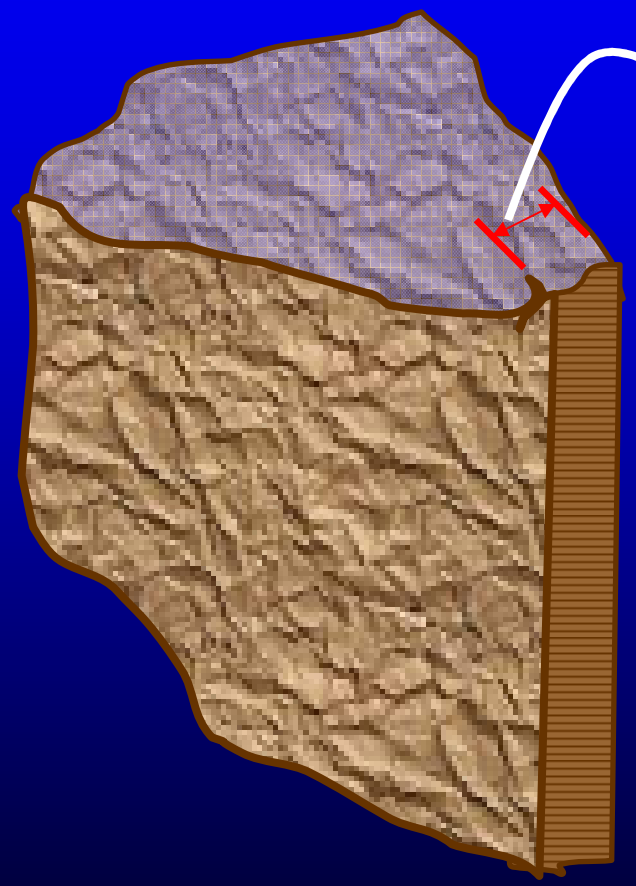

General Design Parameters

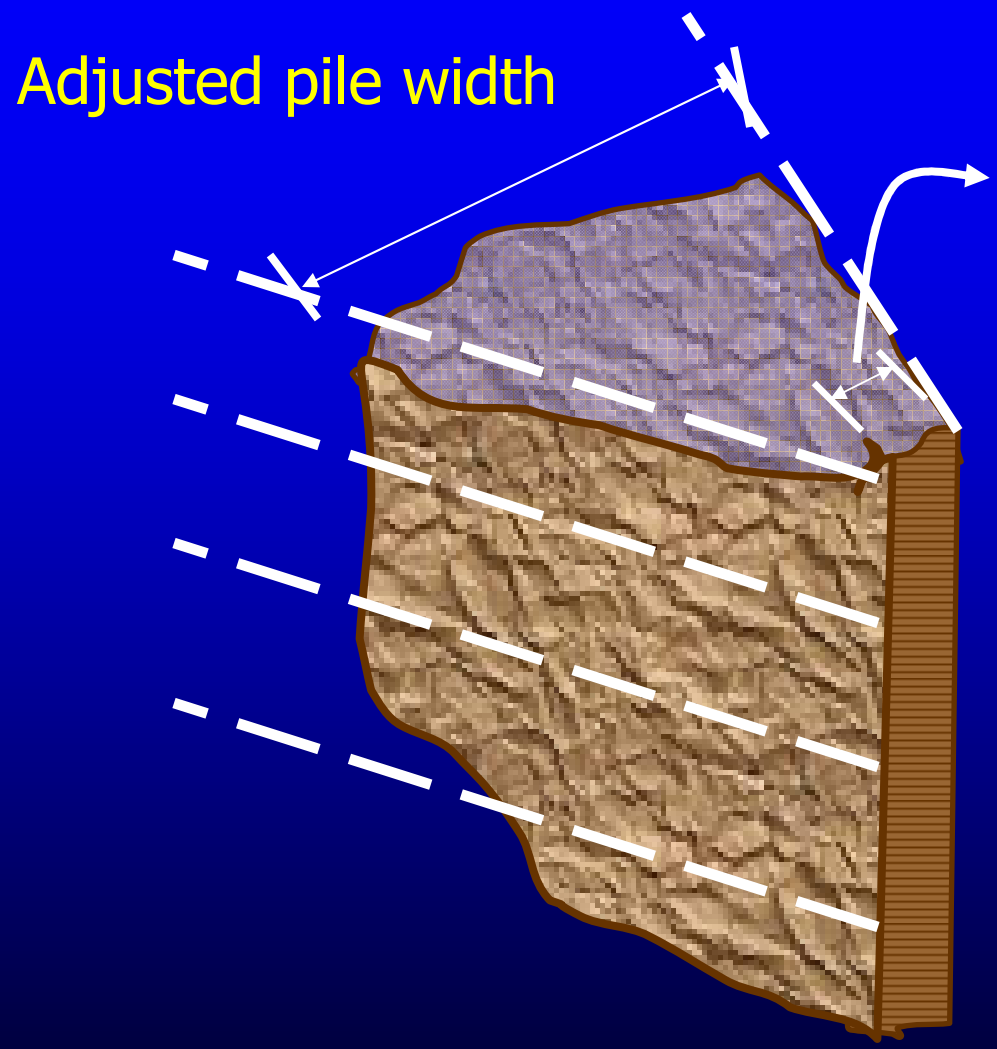

- Adjusted Pile Width
  - Experimentation has shown that the passive resistance of cohesionless soil acts over a width greater than the effective width

GENERAL DESIGN PARAMETERS

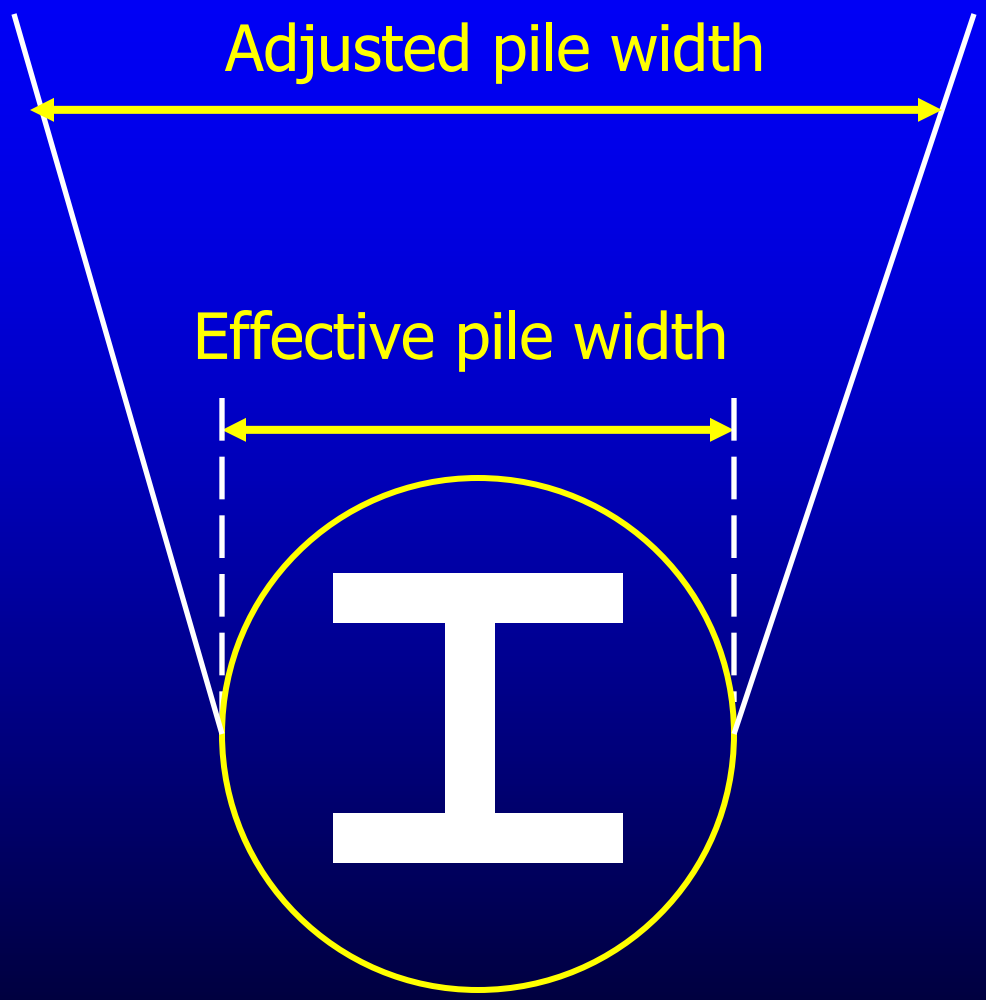

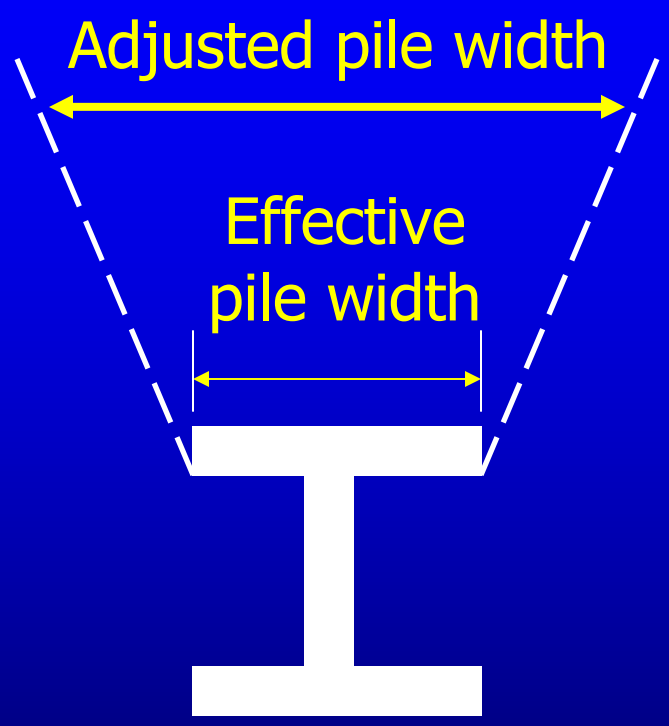

General Design Parameters

- Adjusted Pile Width = Nb
  - Where N = Arching Capability = $0.08\ \varphi \leq 3.0$
    b = Effective Pile Width
  - The value of Nb cannot exceed the soldier pile spacing

GENERAL DESIGN PARAMETERS

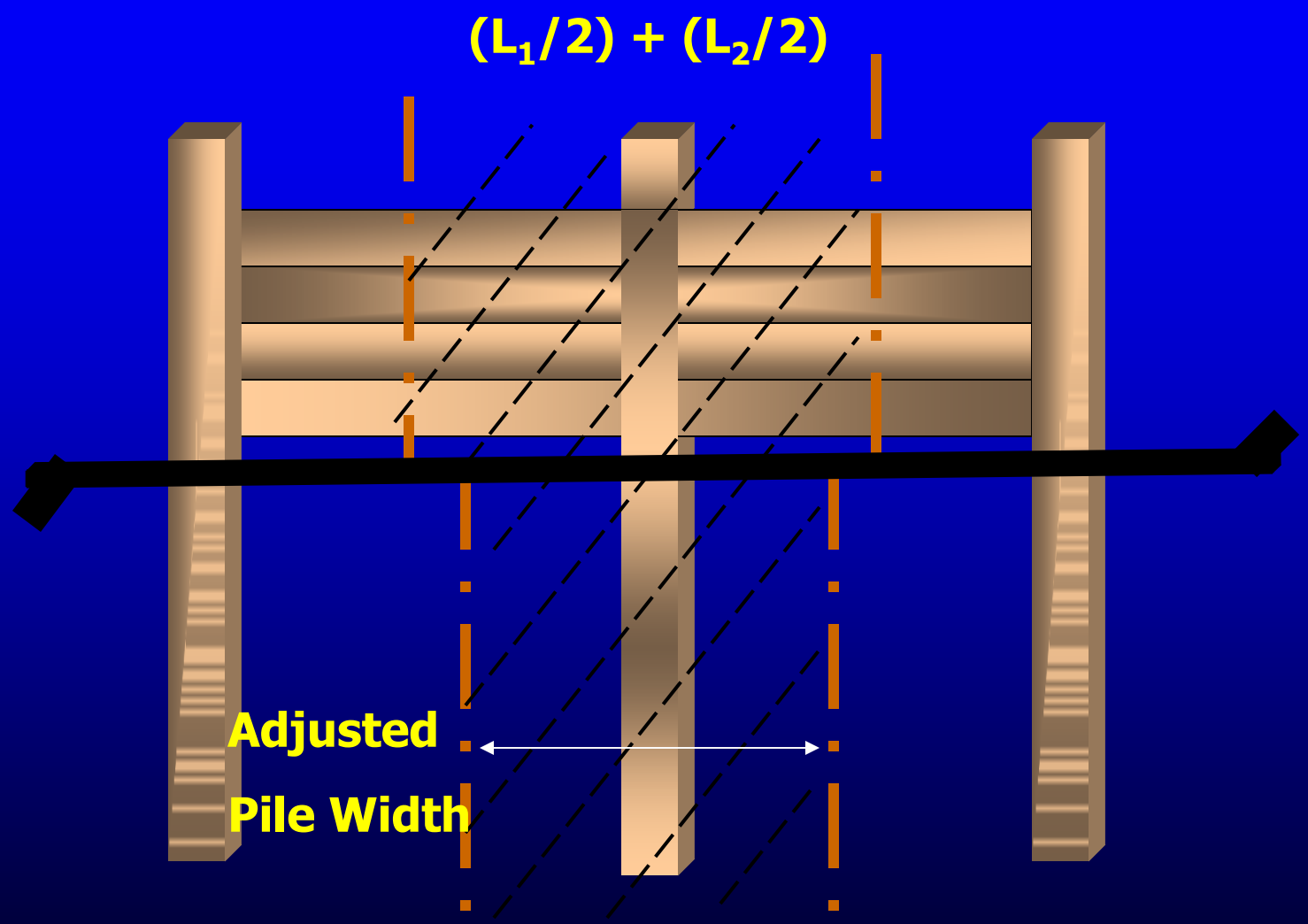

Example Problem

Using HP 14 X 73 and 4″ x 12″ timber lagging

Pile Spacing = 8.33 ft

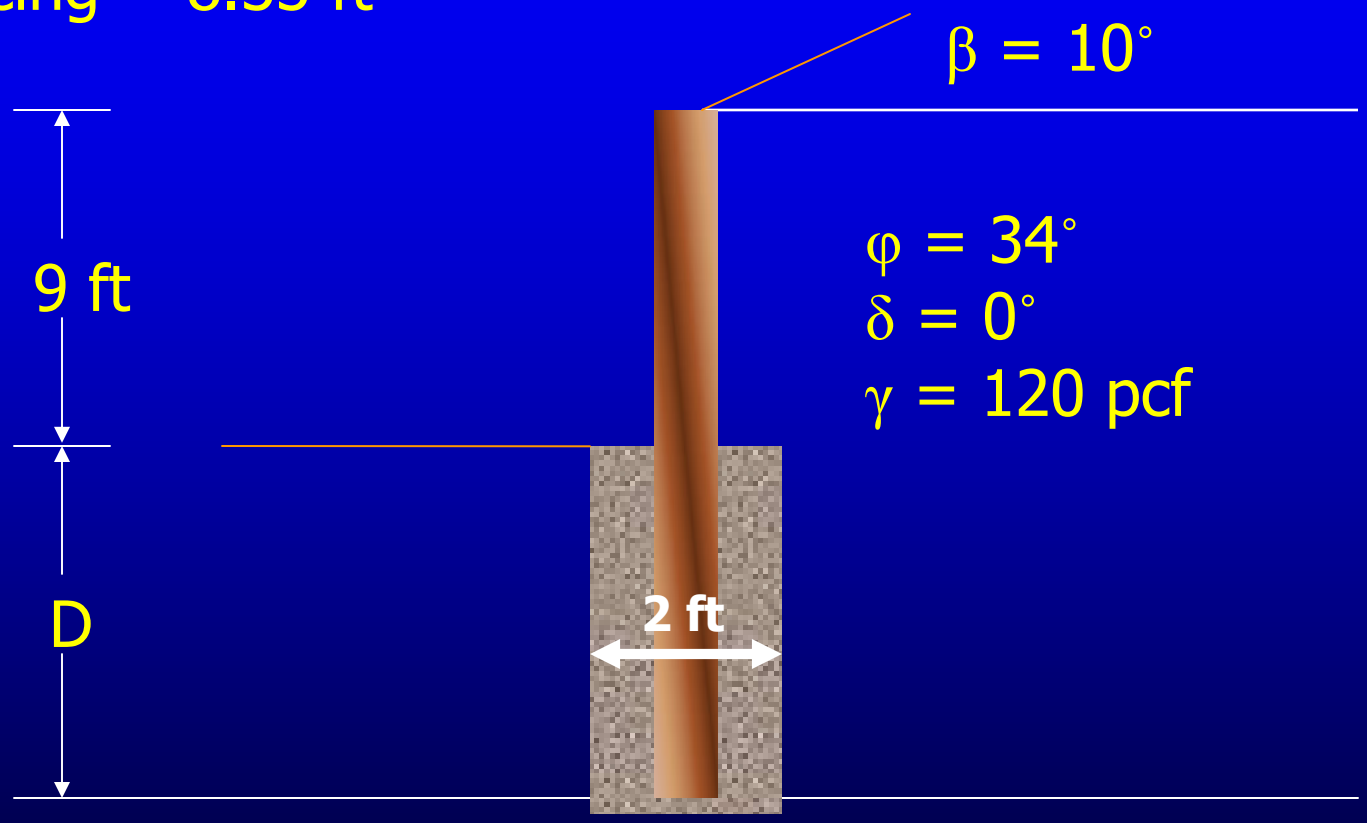

Example Problem – Outline

- Calculate K_a , K_p using soil parameters
- Develop soil pressure diagram
- Determine minimum beam embedment using Factor of Safety = 1.3
- Check structural capacity of the system

Example Problem- Soil Parameters

$$K_a = \frac{\cos^2 \phi}{\cos\delta\left(1+\sqrt{\frac{\sin(\phi+\delta)\times\sin(\phi-\beta)}{(\cos\delta)(\cos\beta)}}\right)^2}$$

$$\phi = 34°, \delta = 0°, \beta = 10°$$

$$K_a = 0.314$$

Example Problem

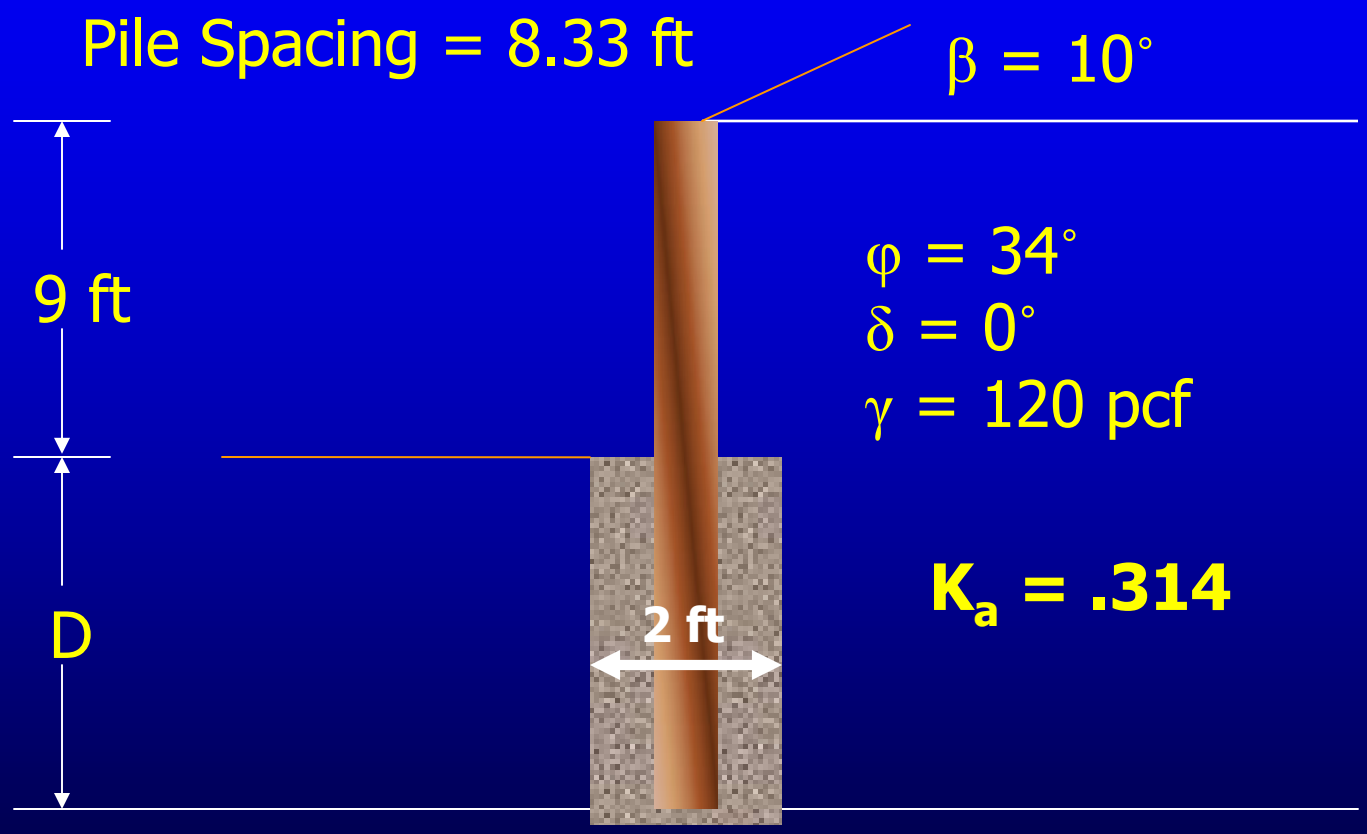

$\varphi = 34^\circ$
$\delta = 0^\circ$
$\gamma = 120$ pcf

$K_a = .314$

Example Problem- Soil Parameters

Find K_p using the Log-Spiral Method

$$\frac{\beta}{\phi} = \frac{0°}{34°} = 0°$$

K_p(chart)=9.44

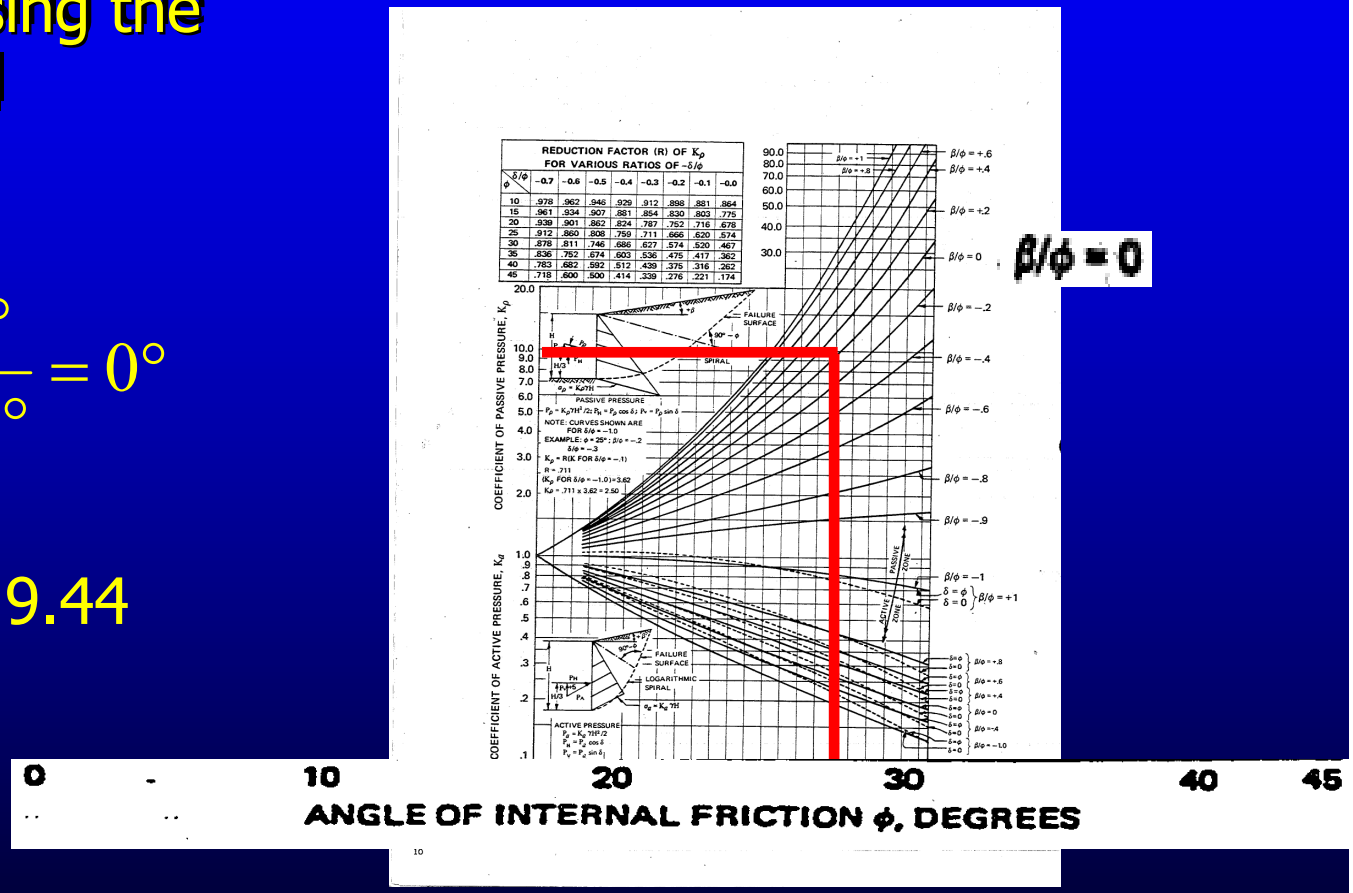

Example Problem- Soil Parameters

$$\frac{\delta}{\phi} = \frac{0°}{34°} = 0°$$

δ/ϕ	-0.7	-0.6	-0.5	-0.4	-0.3	-0.2	-0.1	-0.0

K_p

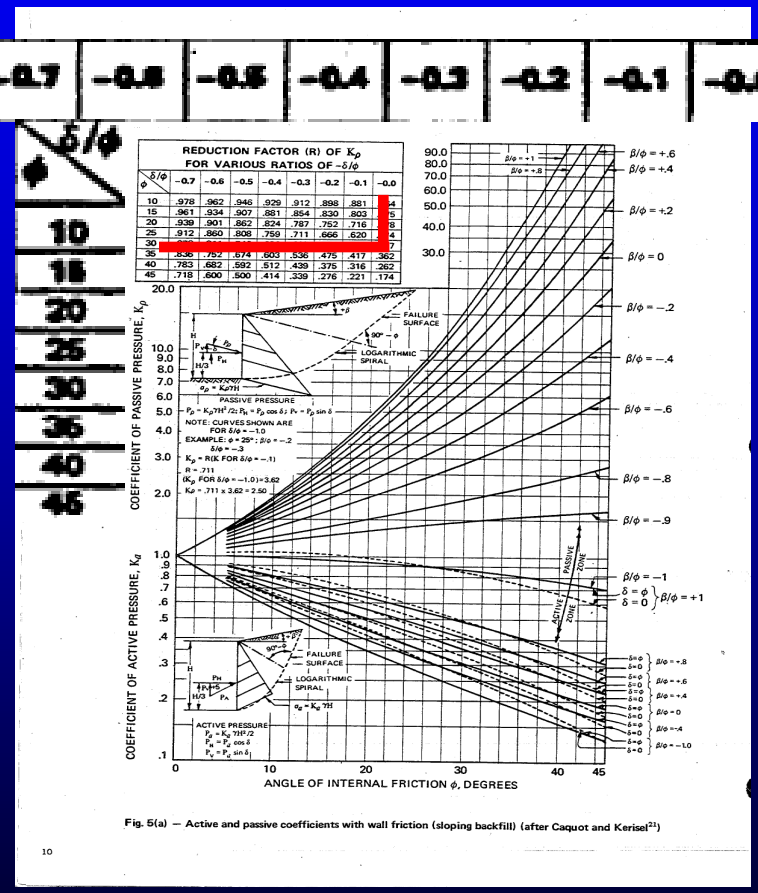

REDUCTION FACTOR (R) OF K_p FOR VARIOUS RATIOS OF $-\delta/\phi$

ϕ \ δ/ϕ	-0.7	-0.6	-0.5	-0.4	-0.3	-0.2	-0.1	-0.0
10	.978	.962	.946	.929	.912	.898	.881	[illegible]
15	.961	.934	.907	.881	.854	.830	.803	[illegible]
20	.939	.901	.862	.824	.787	.752	.716	[illegible]
25	.912	.860	.808	.759	.711	.666	.620	[illegible]
30	[illegible]	[illegible]	[illegible]	[illegible]	[illegible]	[illegible]	[illegible]	[illegible]
35	.836	.752	.674	.603	.536	.475	.417	.362
40	.783	.682	.592	.512	.439	.375	.316	.262
45	.718	.600	.500	.414	.339	.276	.221	.174

Fig. 5(a) — Active and passive coefficients with wall friction (sloping backfill) (after Caquot and Kerisel[21])

10

Reduction Factor, R=0.383

$K_p = RK_p$ (chart)

$K_p = (0.383)(9.44)$

$K_p = 3.616$

Example Problem- Soil Parameters

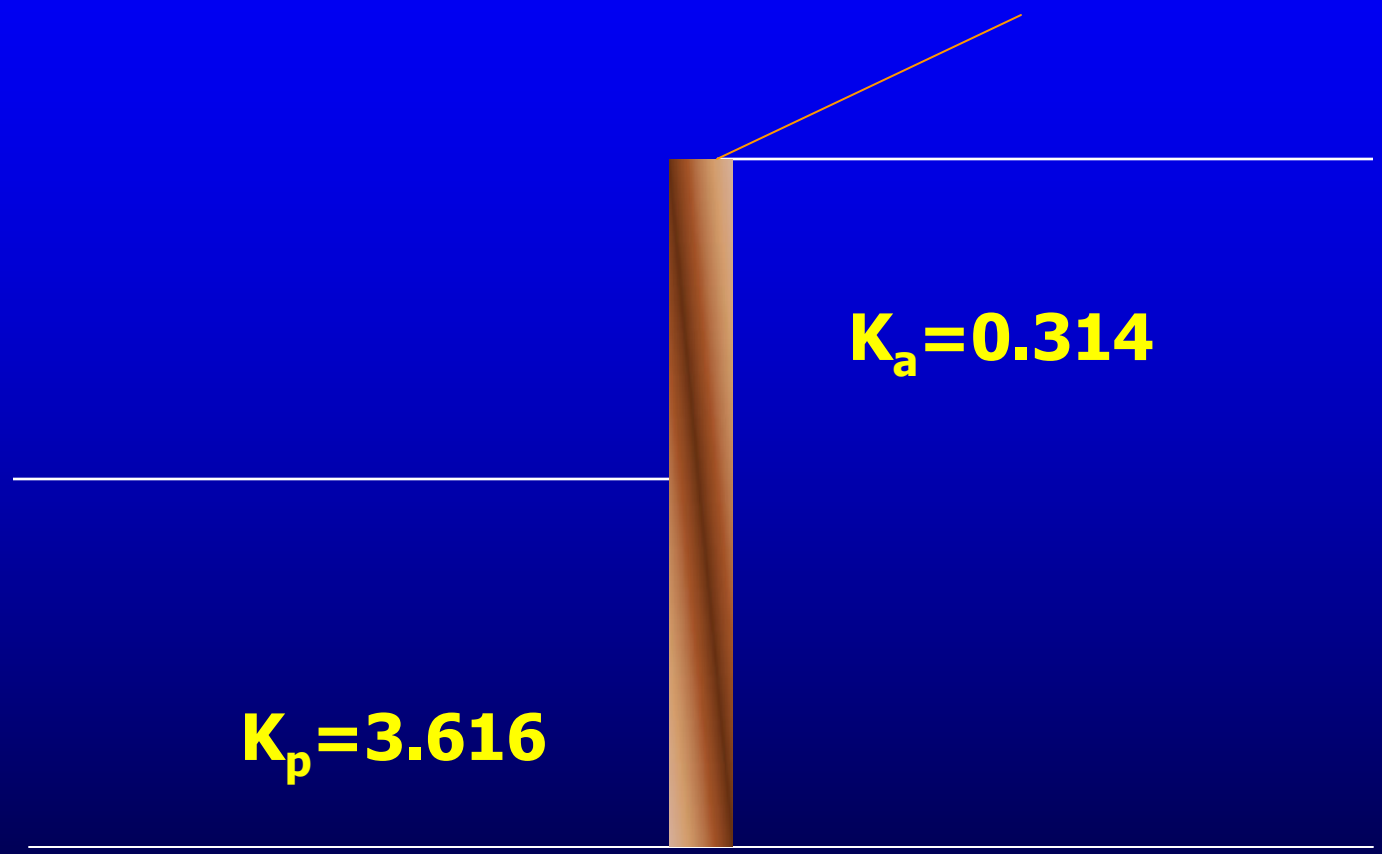

Example Problem – Pressures

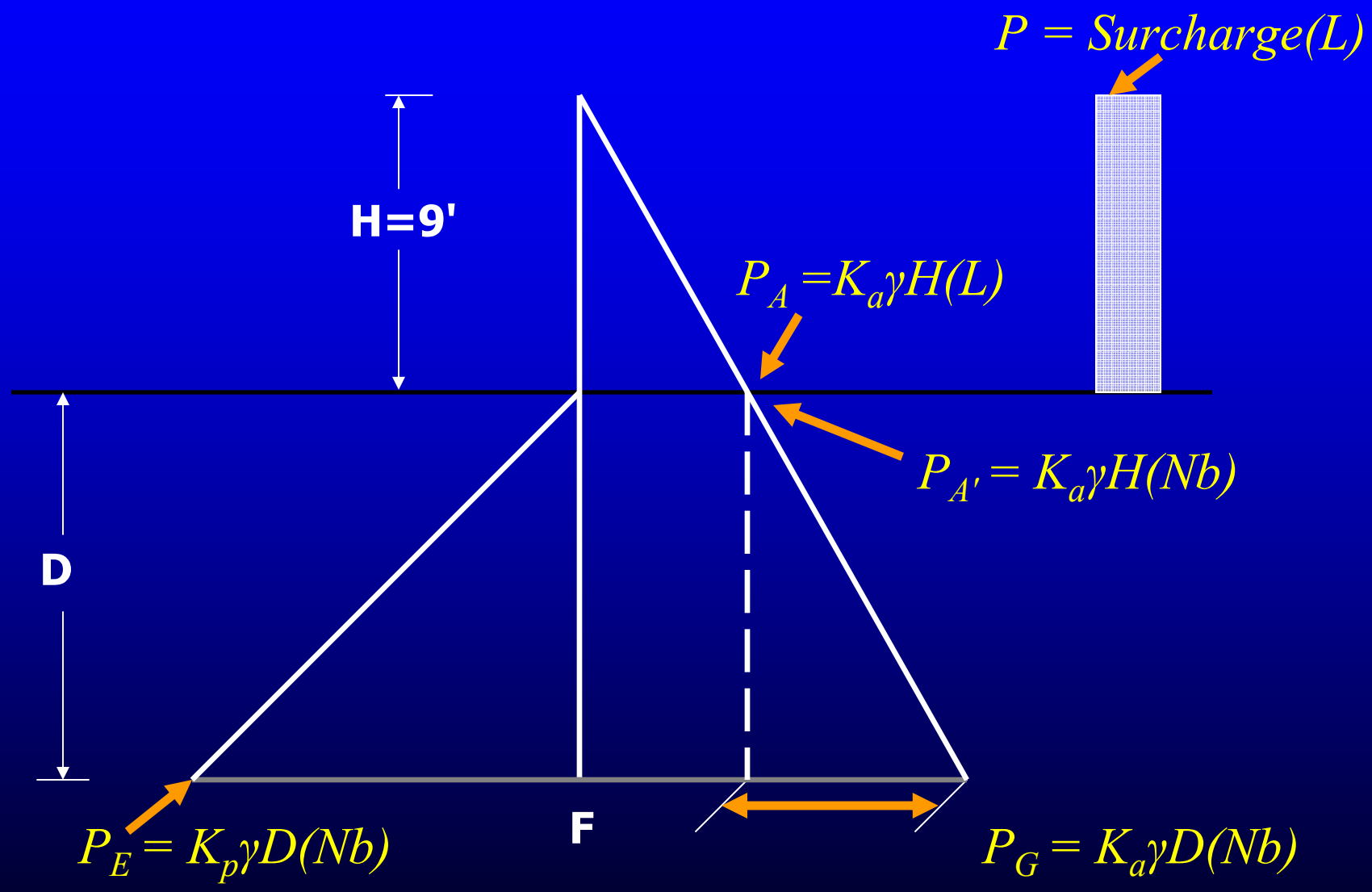

$P_a = K_a \gamma H(L)$

$P_a = (0.314)(120 pcf)(9 ft)(8.33)$

$P_a = 2824.9\ plf$

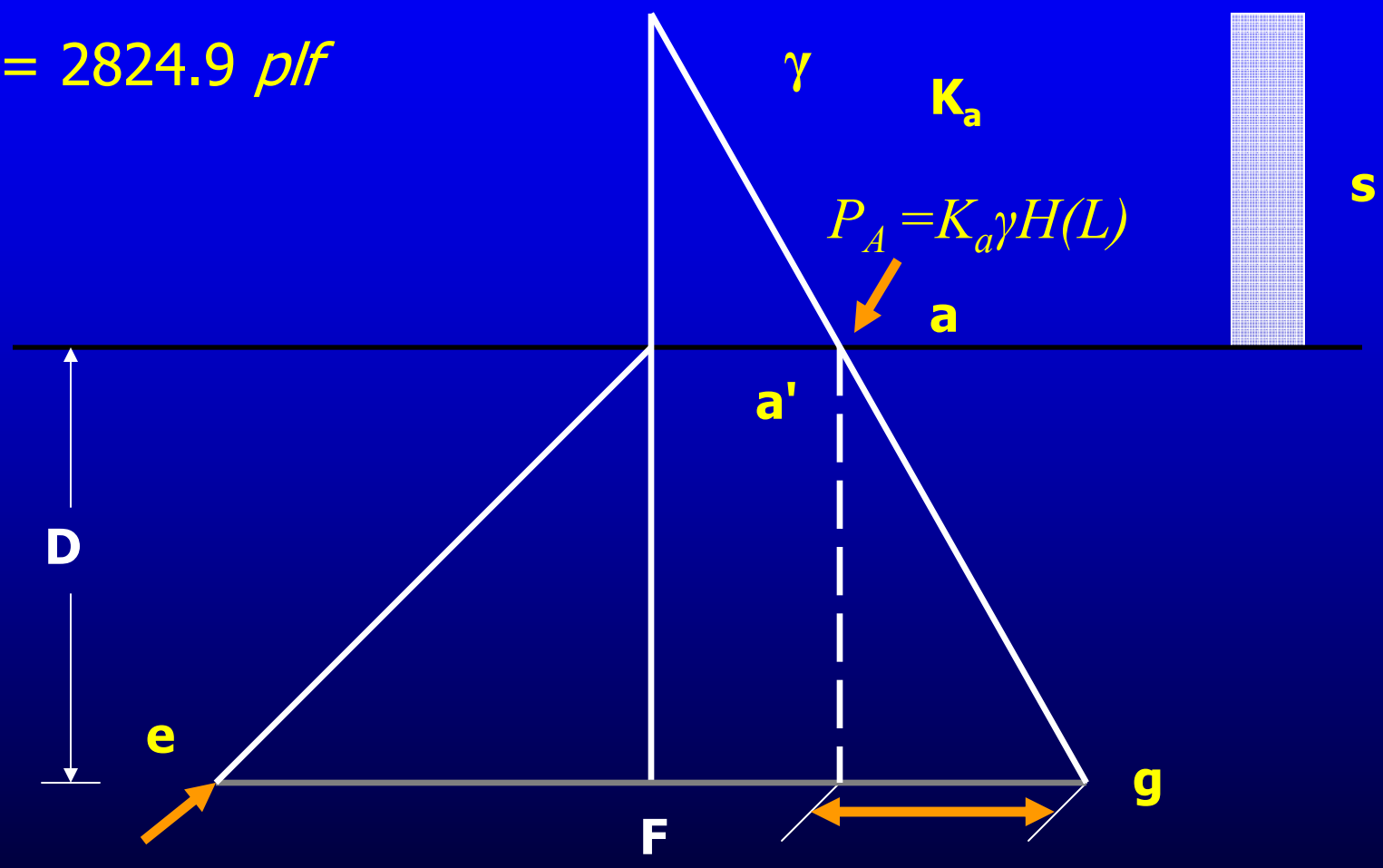

$P_{a'} = K_a \gamma H(Nb)$

$P_{a'} = (0.314)(120pcf)(9)(.08(34))(2)$

$P_{a'} = 1845\ plf$

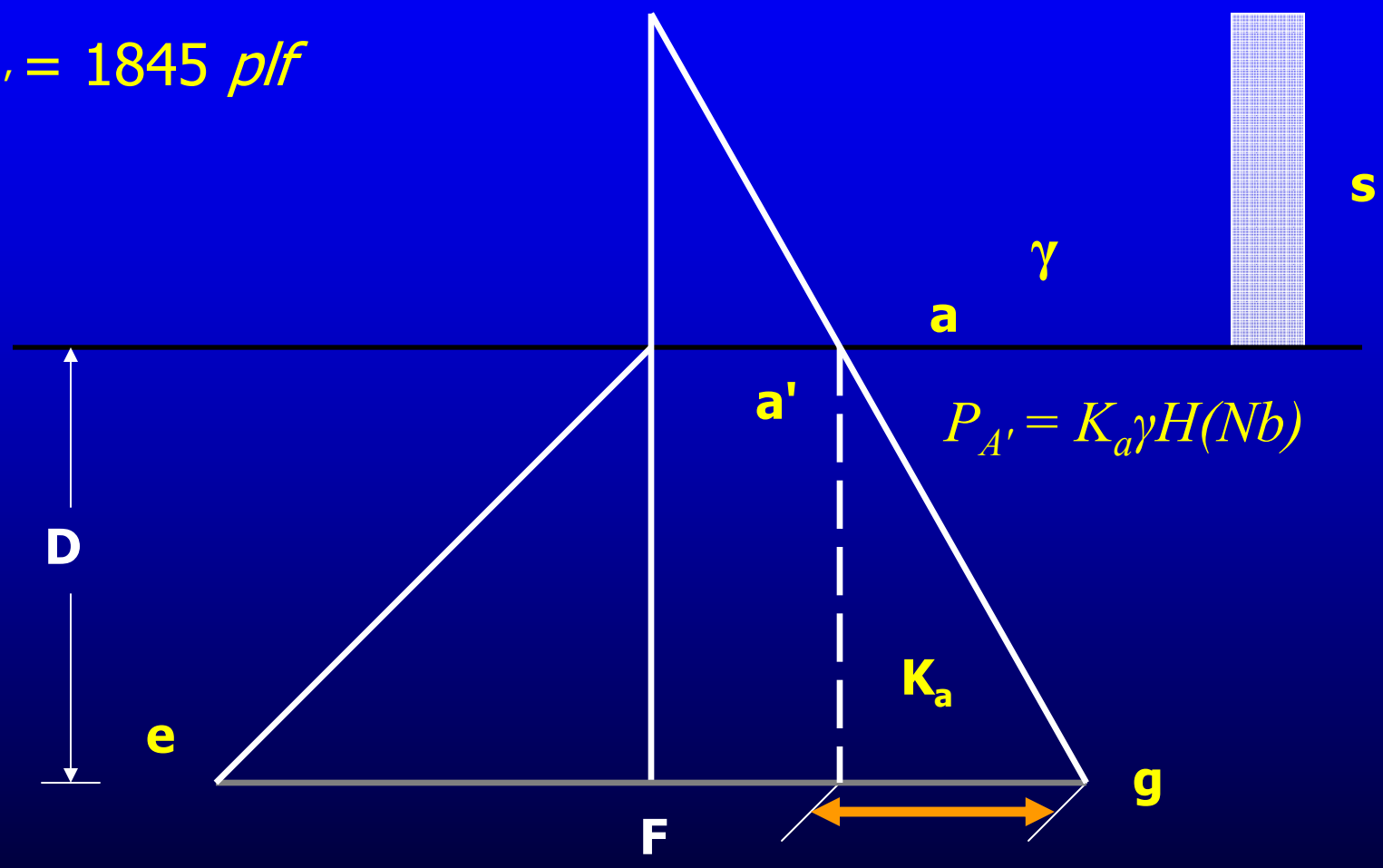

$P_g = K_a \gamma D(Nb)$

$P_g = (0.314)(120pcf)(D)(.08(34))(2)$

$P_g = 205D\ plf$

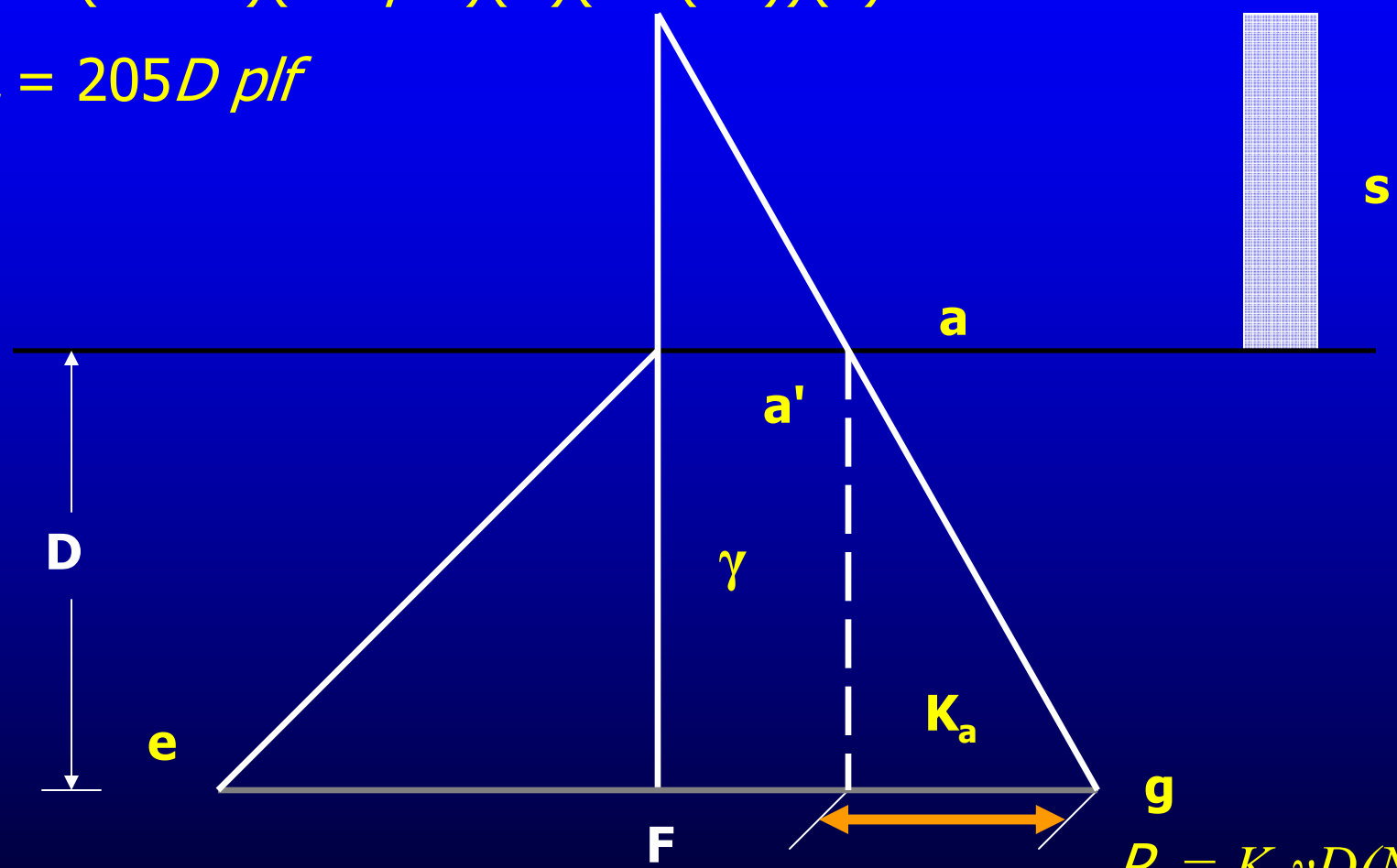

$P_g = K_a \gamma D(Nb)$

$P_e = K_{ph}\gamma D(Nb)$

$P_e = (3.616)(120pcf)(D)(.08(34))(2)$

$P_e = 2361D\ plf$

$P_s = Surcharge(L)$

$P_s = 72(8.33) = 599.8$ plf

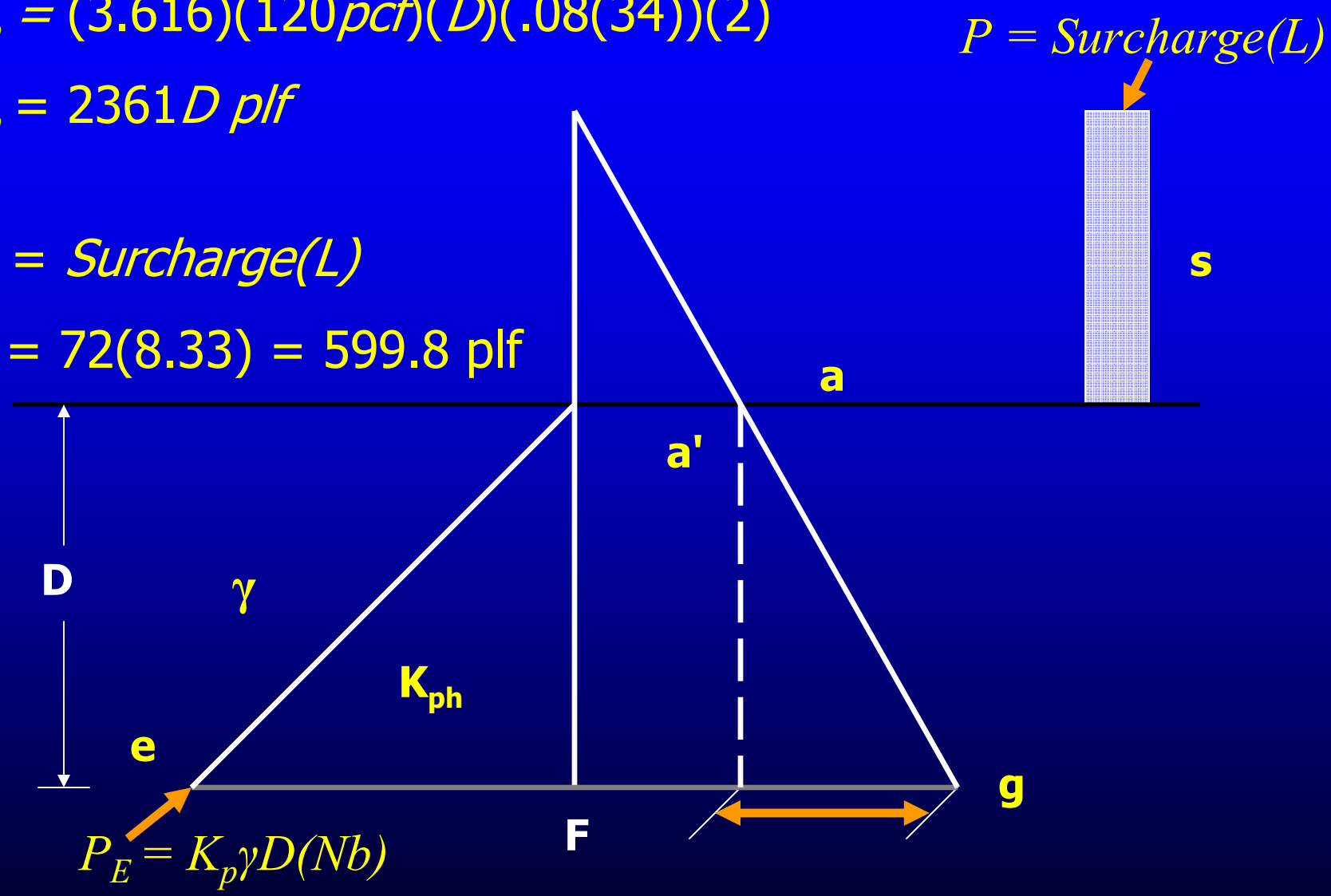

Example Problem – Pressures

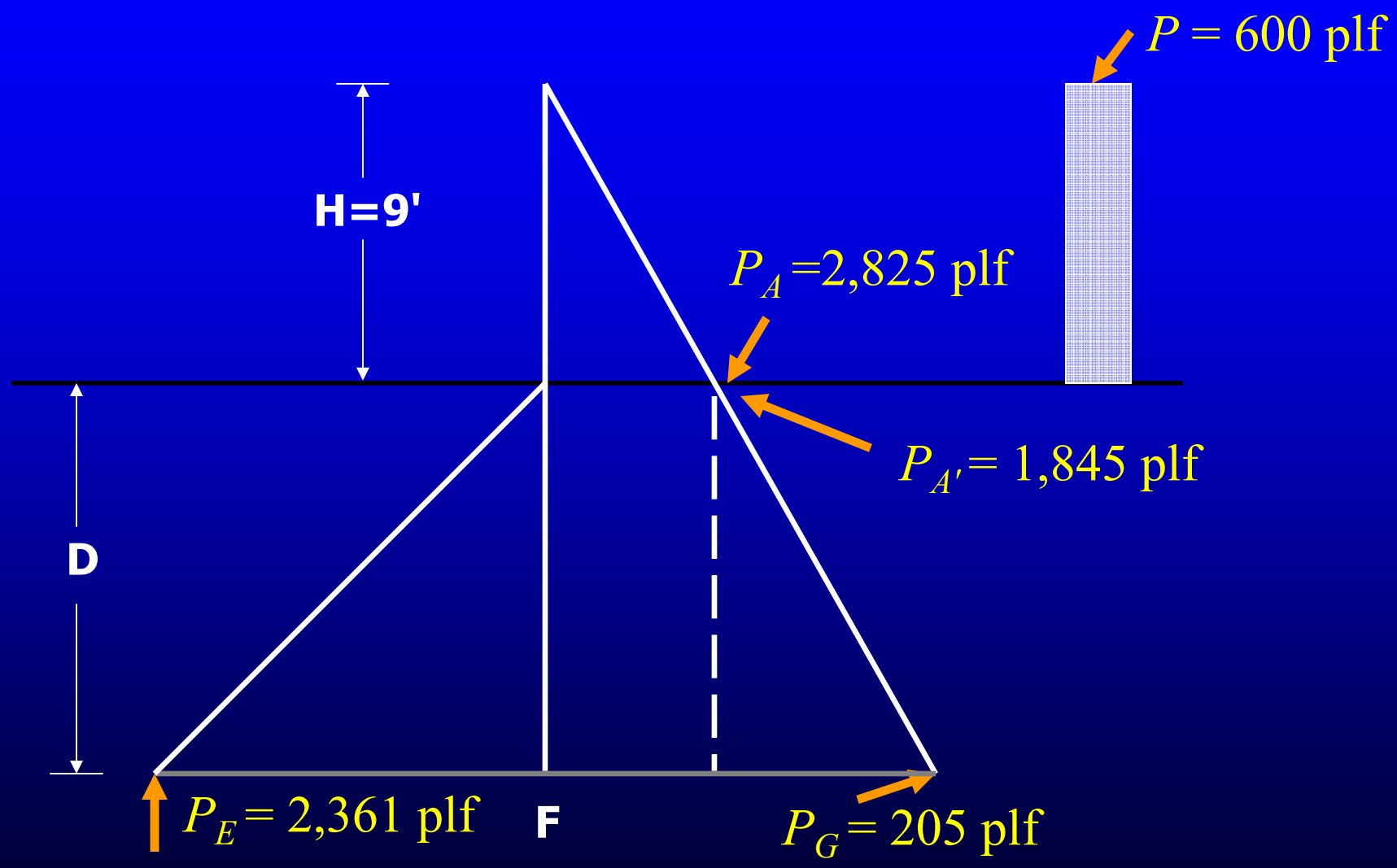

Example Problem – Forces

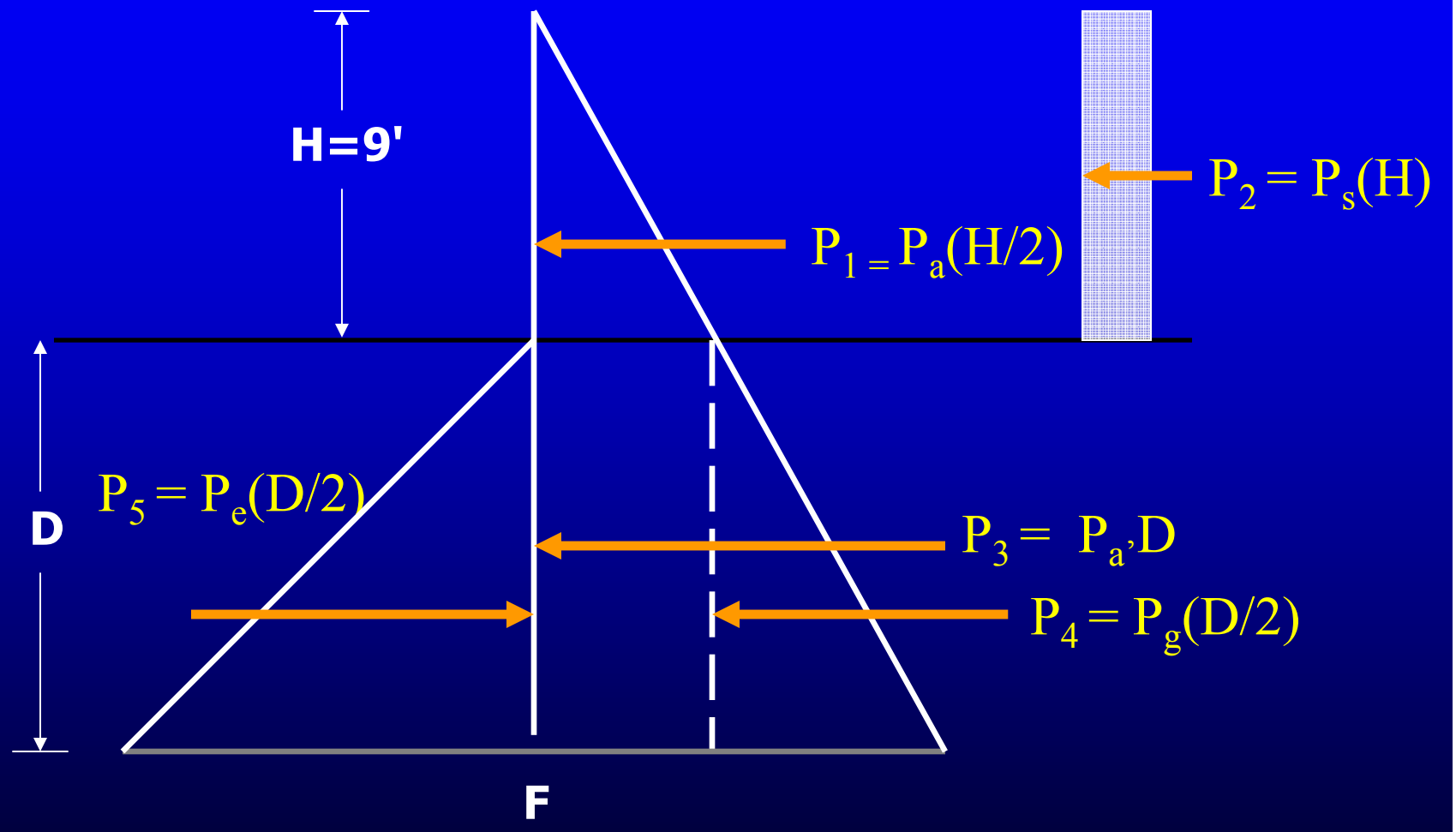

Example Problem – Forces

$P_1 = P_a(H/2)$

$P_1 = 2824.9(9/2)$

$P_1 = 12712\ \#$

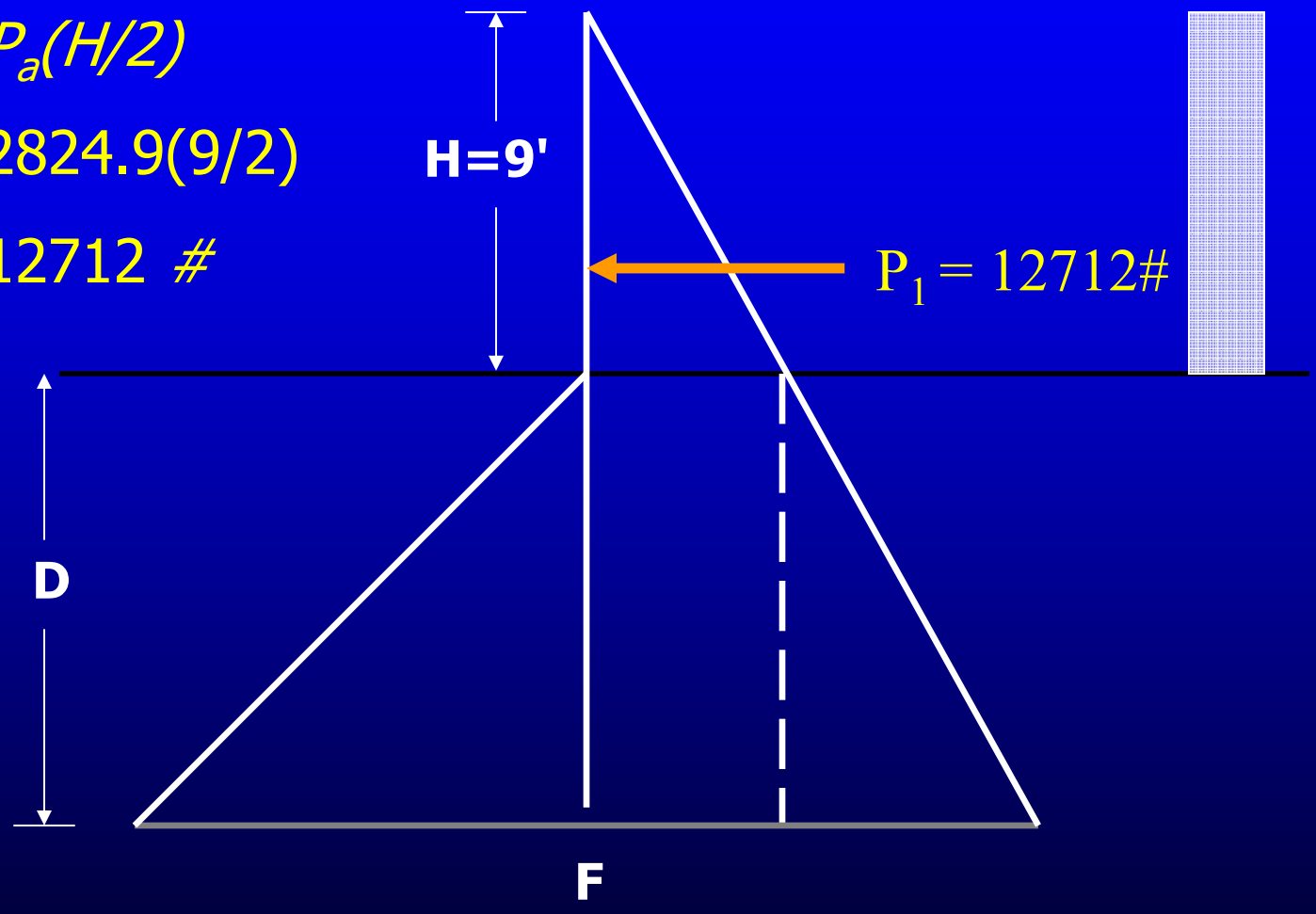

Example Problem – Forces

$P_2 = P_s(H)$

$P_2 = 599.8(9)$

$P_2 = 5398\ \#$

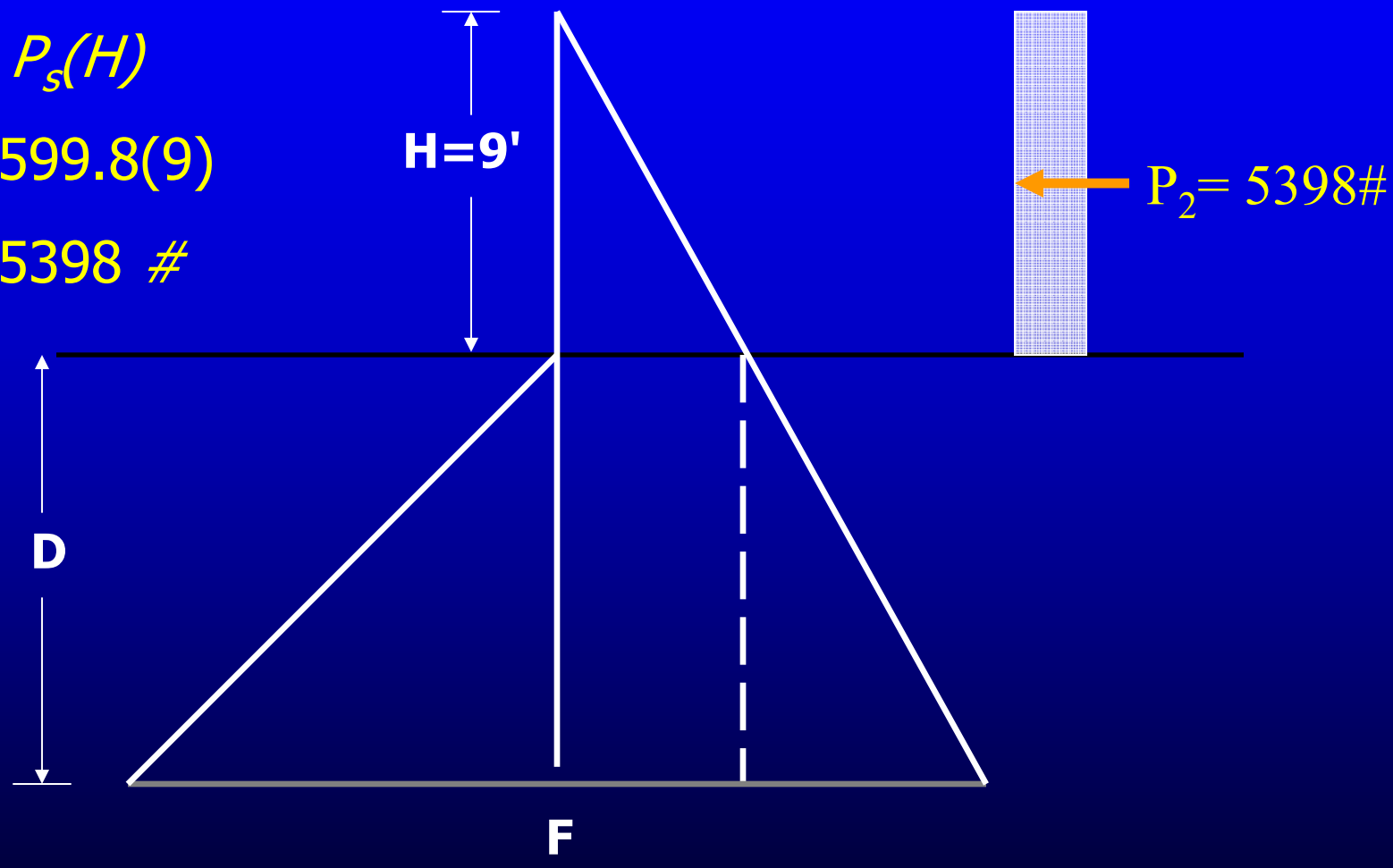

Example Problem – Forces

$P_3 = P_a(D)$

$P_3 = 1845D$ #

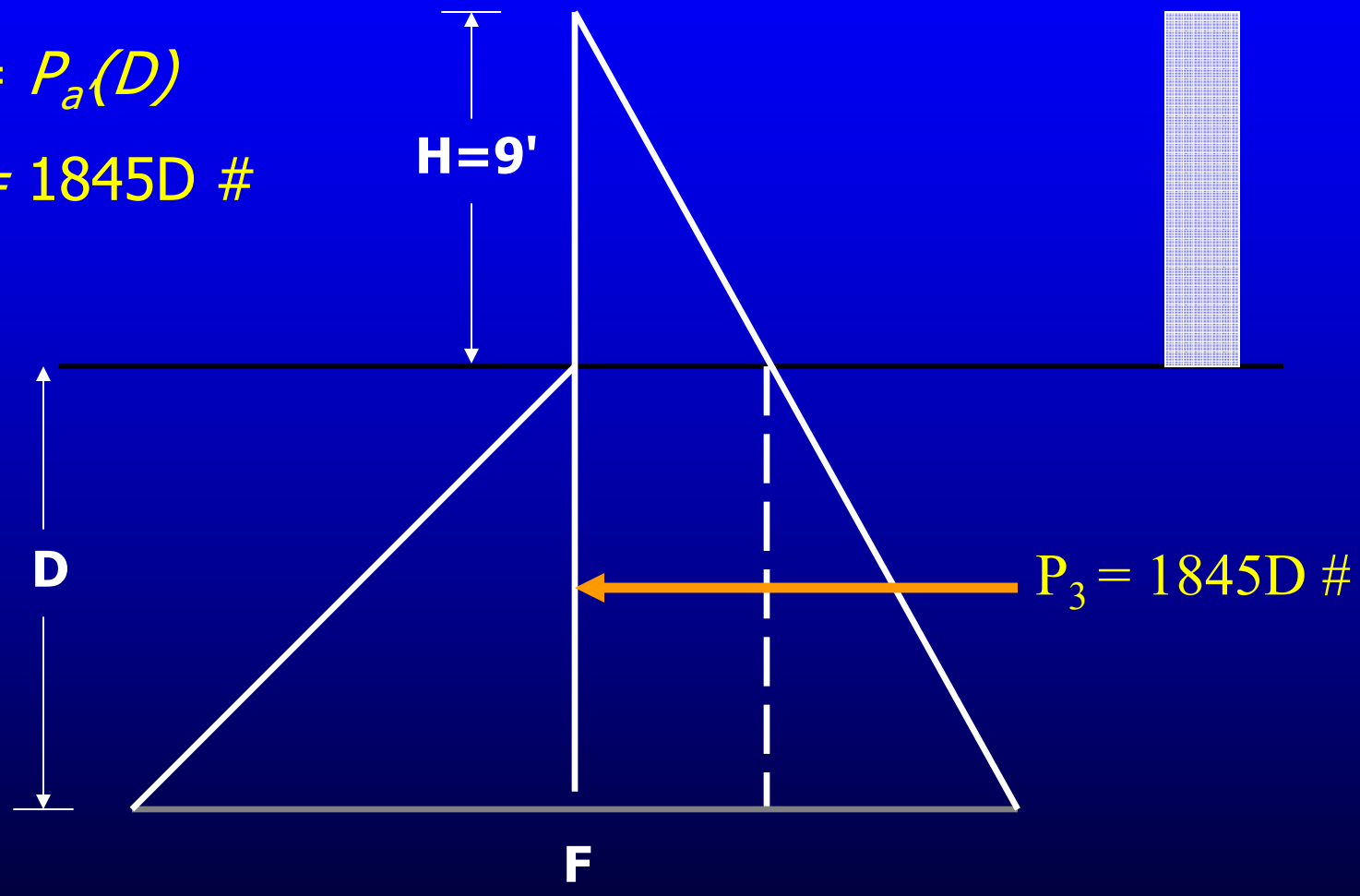

Example Problem – Forces

$P_4 = P_g(D/2)$

$P_4 = 205D(D/2)$

$P_4 = 102.5D^2$

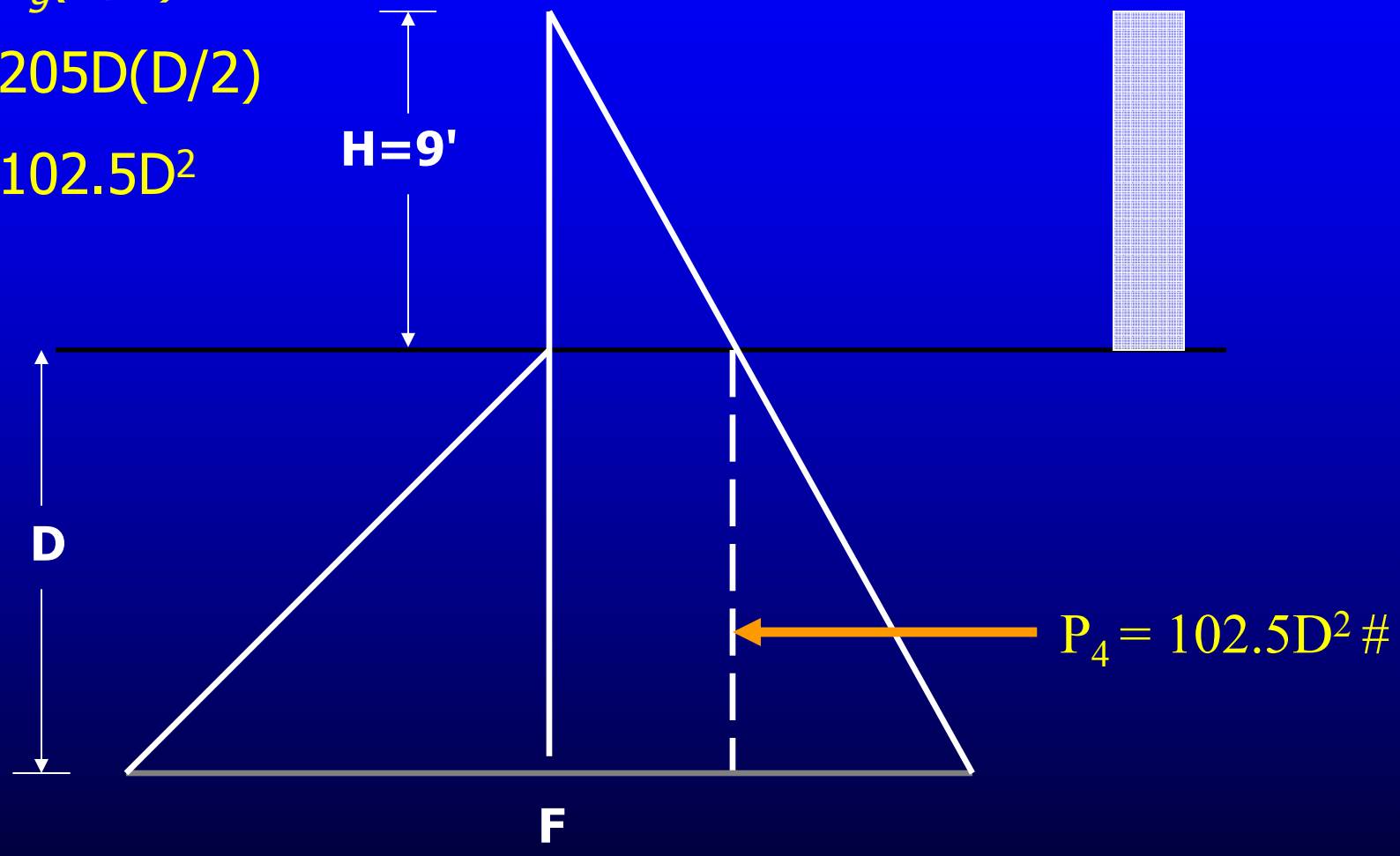

Example Problem – Forces

$P_5 = P_e(D/2)$

$P_5 = 2361D(D/2)$

$P_5 = 1180D^2$

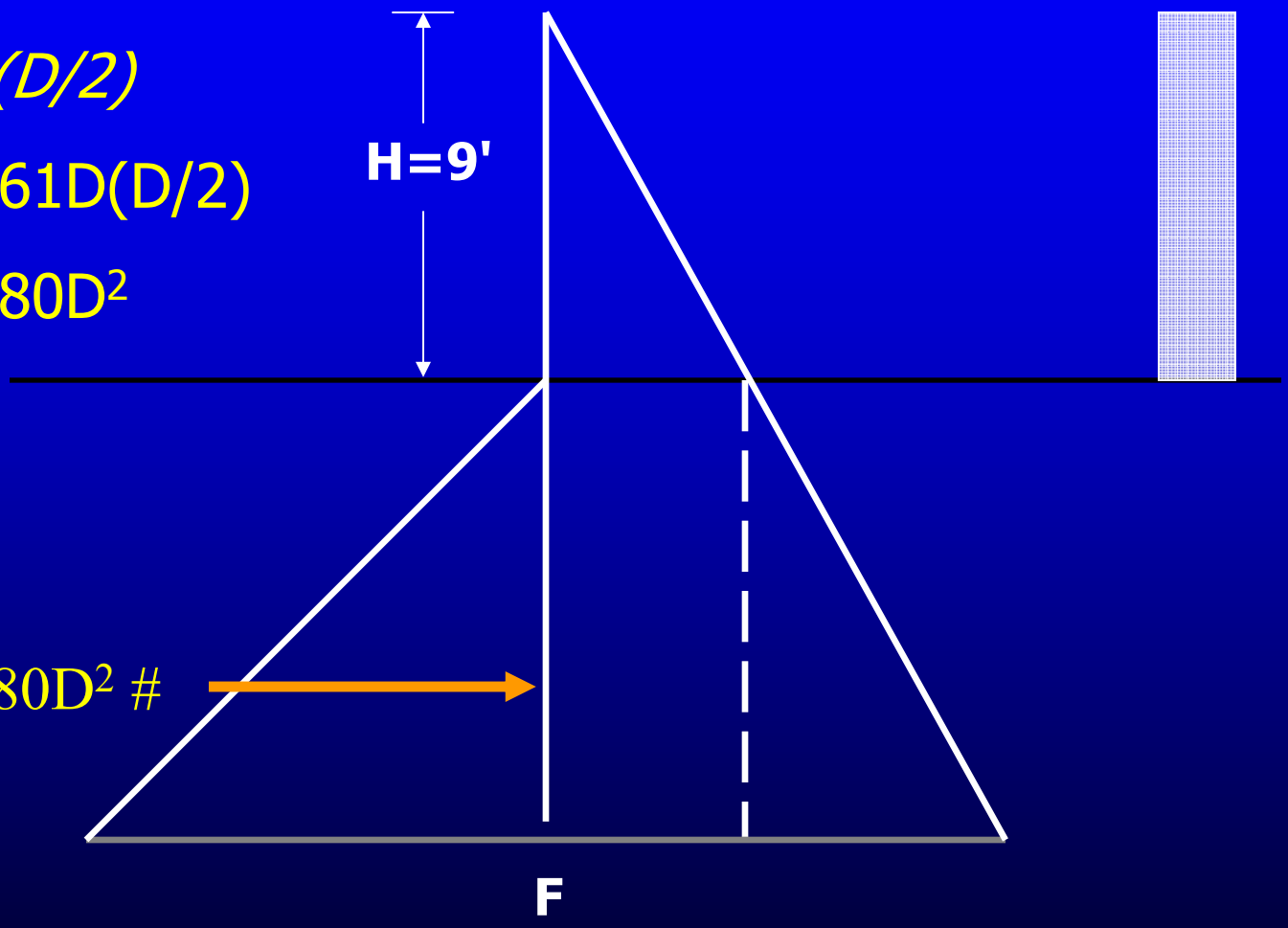

Example Problem – Forces

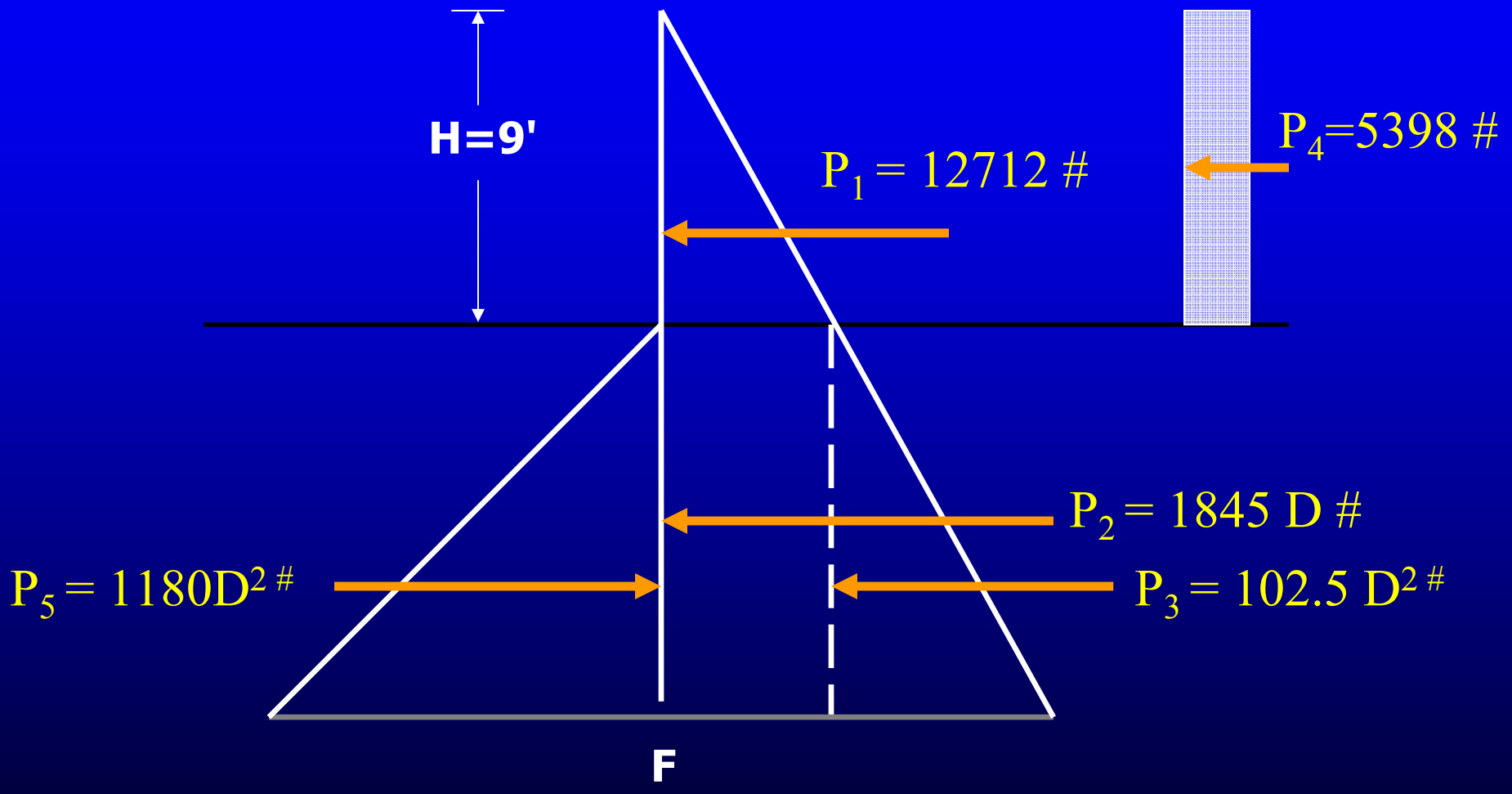

Example Problem – Forces

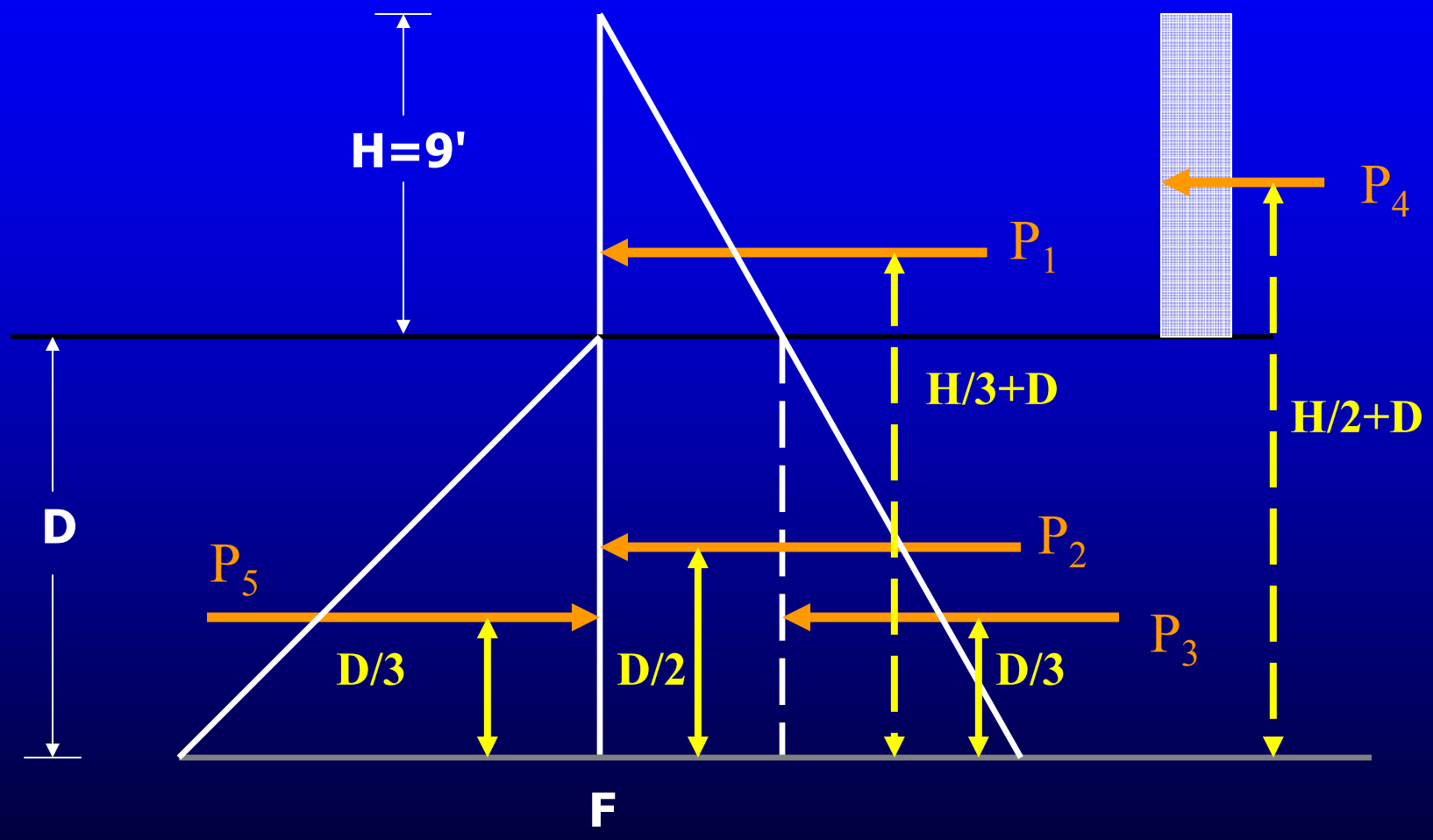

Factor of Safety

$$M_{Resistance} = 1.3\ (M_{Driving})$$

Calculate Minimum Beam Embedment with F.S. = 1.3

$$P_5\left(\frac{D}{3}\right) = 1.3\left(P_1\left(\frac{H}{3}+D\right)+P_2\left(\frac{H}{2}+D\right)\right)+$$

$$1.3\left(P_3\left(\frac{D}{2}\right)+P_4\left(\frac{D}{3}\right)\right)$$

Calculate Minimum Beam Embedment with F.S. = 1.3

$$1180D^2\left(\frac{D}{3}\right)=1.3\left(12712\left(\frac{9}{3}+D\right)+5398\left(\frac{9}{2}+D\right)\right)+$$

$$1.3\left(1845D\left(\frac{D}{2}\right)+102.5D^2\left(\frac{D}{3}\right)\right)$$

$$269D^3-923D^2-18110D-62427=0$$

$$D=11.25\,ft \Rightarrow D_{1.2}=13.5\,ft$$

Example Problem– Calculate Point of Zero Shear, X

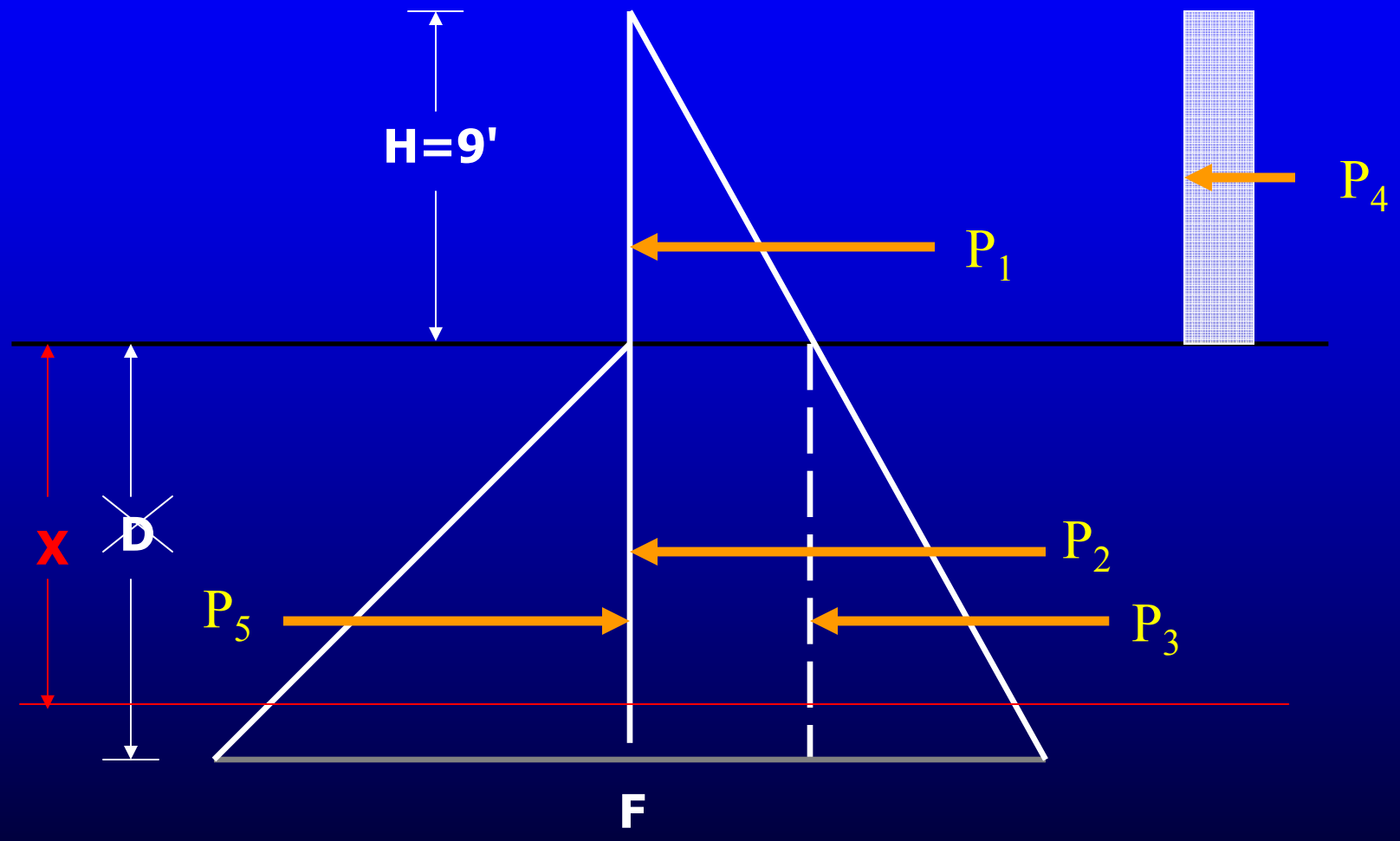

Example Problem– Calculate Point of Zero Shear, X

Use X in lieu of D

$P1 + P_2 + P_3 + P_4 = P_5$

$12712 + 5398 + 1845X + 102.5X^2 = 1180X^2$

$1077.5X^2 - 1845X - 18110 = 0$

$$\therefore X = 5.04\,ft$$

Example Problem – Calculate Maximum Moment At X

Maximum Moment at point of zero shear:

$$P_1\left(\frac{H}{3}+X\right)+P_2\left(\frac{H}{2}+X\right)+P_3\left(\frac{X}{2}\right)+P_4\left(\frac{X}{3}\right)-P_5\left(\frac{X}{3}\right)=M$$

$$M=12712\left(\frac{9}{3}+5.04\right)+5400\left(\frac{9}{2}+5.04\right)$$

$$+1845(5.04)\left(\frac{5.04}{2}\right)+102.5(5.04)\left(\frac{5.04}{3}\right)-1180(5.04)^2\left(\frac{5.04}{3}\right)$$

$$M=131{,}152\,ft\cdot lbs$$

Calculate Minimum Beam Size

$$S = \frac{M}{f_b}$$

$$S = \frac{M}{f_b} = \frac{(131{,}152\, ft \cdot lbs)(12\, {}^{in}\!/_{ft})}{22{,}000\, psi}$$

$$S = 71.54 in^3$$

Using HP 14 x 73, S = 107 in^3 OK

Calculate Minimum Lagging Size

Maximum load occurs at the depth of excavation:

$$M_{\max} = \frac{0.6WL^2}{8} = \frac{(0.6)(339.12\,{}^{lb}\!/_{ft})(8.33')^2}{8} = 1{,}764.8\,ft \cdot lbs$$

$$S_{required} = \frac{(1{,}764.8\,ft \cdot lbs)(12\,{}^{in}\!/_{ft})}{1{,}500\,psi} = 14.1\,in^3$$

Using 4″ X 12″, S = 32″ OK

Computer Program

DATA INPUT TABLE:

Soil Geometry Input Data per soil layer:

Layer	Thick.	ϕ	δ	γ	Coh	Method to Calculate K	
	ft	°	°	pcf	psf	Active	Passive
1	26.50	34.00	0.00	120.00	0	Coulomb	Log Spiral

MISCELLANEOUS INPUT DATA:

Excavation Height 'H': 9 ft

Embedment Depth 'D': TBD

Ground Water present? : No

Factor of Safety 'FOS': 1.30

Groundline Slope behind Wall 'β': 10°

Mudline Slope in front of Wall 'β'': 0°

SURCHARGE LOAD INPUT DATA

Minimum Uniform Surcharge Load: 72 psf

Depth of Minimum Uniform Surcharge Load: 9 ft

PILE INPUT DATA

Type	Spacing	Effect. Width	Arch. Cap	Description	Steel Gr	Overstress?
Soldier	8.33 ft	2.00 ft	2.72	HP14X73	36 ksi	Yes

LAGGING INPUT DATA

Type	Clr Span	Size	Surface	Limit SP?
Wood	8.33 ft	4x	Rough	No

Computer Program

Calculated Embedment Depth (@ FOS=1.30) '$D_{1.2}$': 13.52 ft (Depth factor = 1.2)

$$D = 11.25\,ft \Rightarrow D_{1.2} = 13.5\,ft$$

(User inputs soil geometry per soil layer)

NOT INTENDED FOR TRENCHING AND SHORING DESIGN PURPOSES

CALCULATED RESULTS

PRESSURE COORDINATES

Active: (2 layers)

Depth	σ_h +	σ_h −
ft	psf	psf
0.00	0.00	0.00
9.00	338.62	338.62
26.50	997.04	0.00

Passive: (1 layers)

Depth	σ_h +	σ_h −
ft	psf	psf
9.00	0.00	0.00
26.50	7592.59	0.00

Pressure

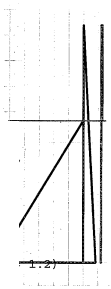

Moment

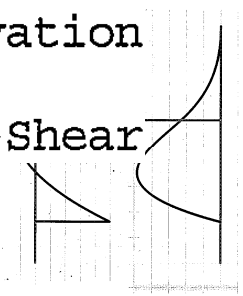

BEAM SHEARS AND MOMENTS

Maximum Shear 'V': 64,495 lbs

0-Shear: 5.04 ft below bottom of excavation

Maximum Moment 'M': 130,960 lb-ft @ 0-Shear

$$X = 5.04\,ft$$

$$M = 131{,}152\,ft \cdot lbs$$

Page 2

Construction Considerations

- Before construction starts:
  - Review LOTBs and soils reports for the types of soils that may be encountered
  - Review the Contract Plans and Special Provisions
  - Inspect the site for any utilities and other obstructions

Construction Considerations

- During Installation of Soldier Piles:
  - Holes may collapse during drilling
  - Holes can be filled with lean concrete and drilled through once the lean concrete is set
  - Do not stand next to hole without a safety harness

Construction Considerations

- During Installation of Soldier Pile:
  - Do not leave hole open for extended period
  - Cover all holes after drilling is complete

Construction Considerations

- During Installation of Lagging:
  - Voids behind the lagging should be filled with compacted soil
  - Lagging may be installed with a maximum spacing of 1-1/2” to allow seepage through the system
  - Packing hay or straw in the spaces will prevent soil going through the spaces

Construction Considerations

Construction Considerations

- During the Removal Process:
  - Lagging is removed from the bottom with the backfill operation
  - Lagging should not be removed greater than 5’ without backfill
  - Lagging left in place should be pressure treated timber
  - Soldier piles will be removed after the backfill operation is complete

Advantages/Disadvantages

- Disadvantages
  - Cannot be used in high water table conditions with extensive dewatering
  - Poor backfilling can result in significant surface settlements
  - Not as stiff as other retaining systems
- Advantages
  - Inexpensive compared to other retaining walls
  - Very easy and fast to construct

Summary

- Introduction
- Components of a Soldier Pile Wall
- General Design Parameters
- Sample Problem using AASHTO method
- Same sample problem using computer program
- Construction Considerations
- Advantages/Disadvantages

Questions

Break!!

Tiebacks and Soil Nails

Tony English, PE

530-713-7869

WINTER TRAINING 2010

Tieback Walls

- What is a tieback wall?
- Why use tieback walls?
- What are the parts of a tieback wall?
- How are tieback walls reviewed?
- How are tieback walls inspected in the field?

What is a Tieback Wall?

Why use tieback walls?

- Increased height
  - Typically excavations deeper than 20’

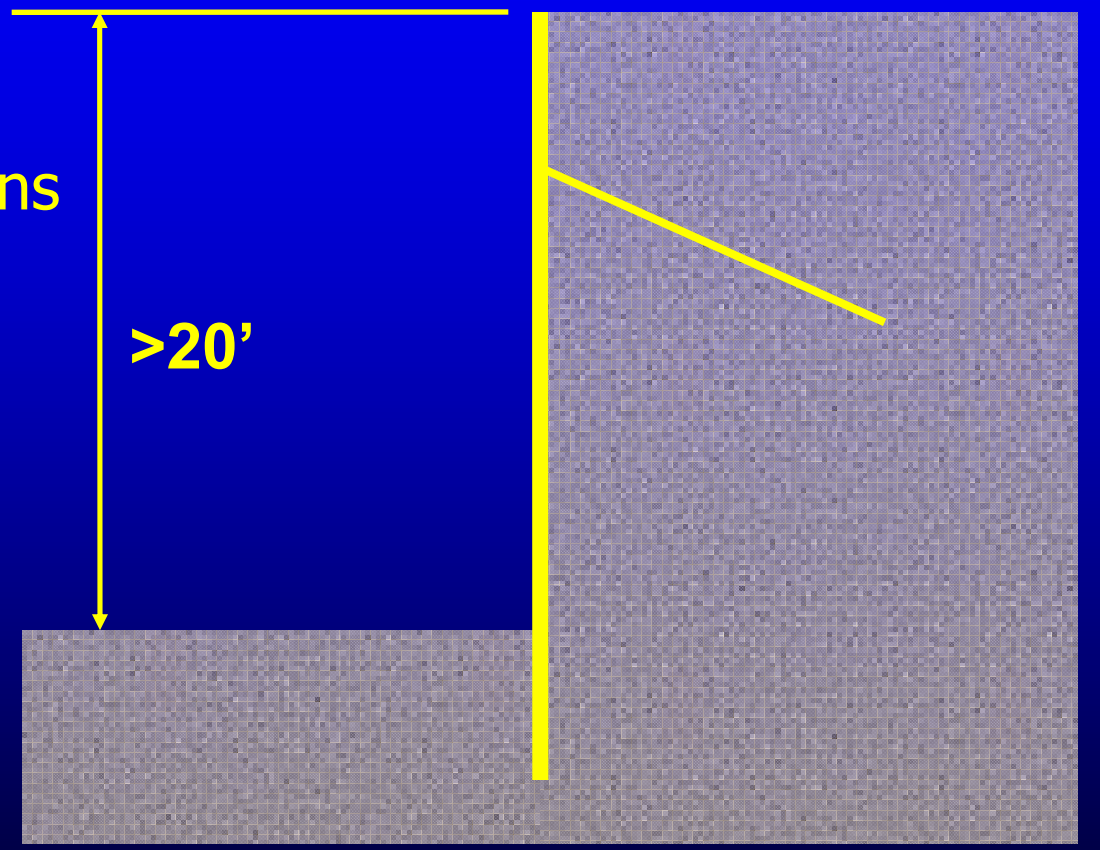

Why use tieback walls?

- Fewer intrusions into work area
  - Struts or rakers may impair the work area
  - In wide excavations struts can be impractical

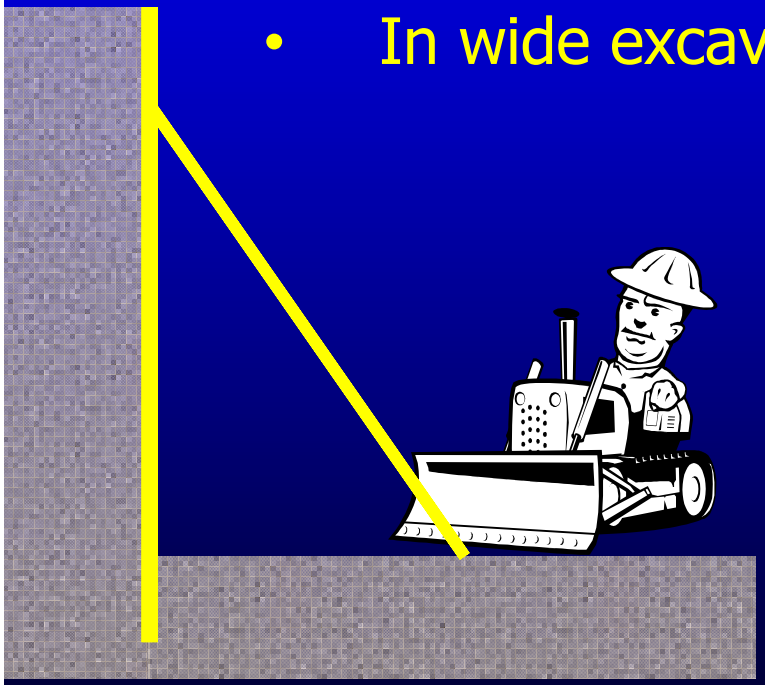

Disadvantages of Tiebacks

- Perform poorly in some soil types
- Expensive to construct
  - Specialized equipment required

Disadvantages of Tiebacks

- Perform poorly in some soil types
- Expensive to construct
  - Specialized equipment required
- Encroachment Problems
  - Subsurface utilities

Disadvantages of Tiebacks

- Perform poorly in some soil types
- Expensive to construct
  - Specialized equipment required
- Encroachment Problems
  - Subsurface utilities
  - Future development

Anatomy of a ti

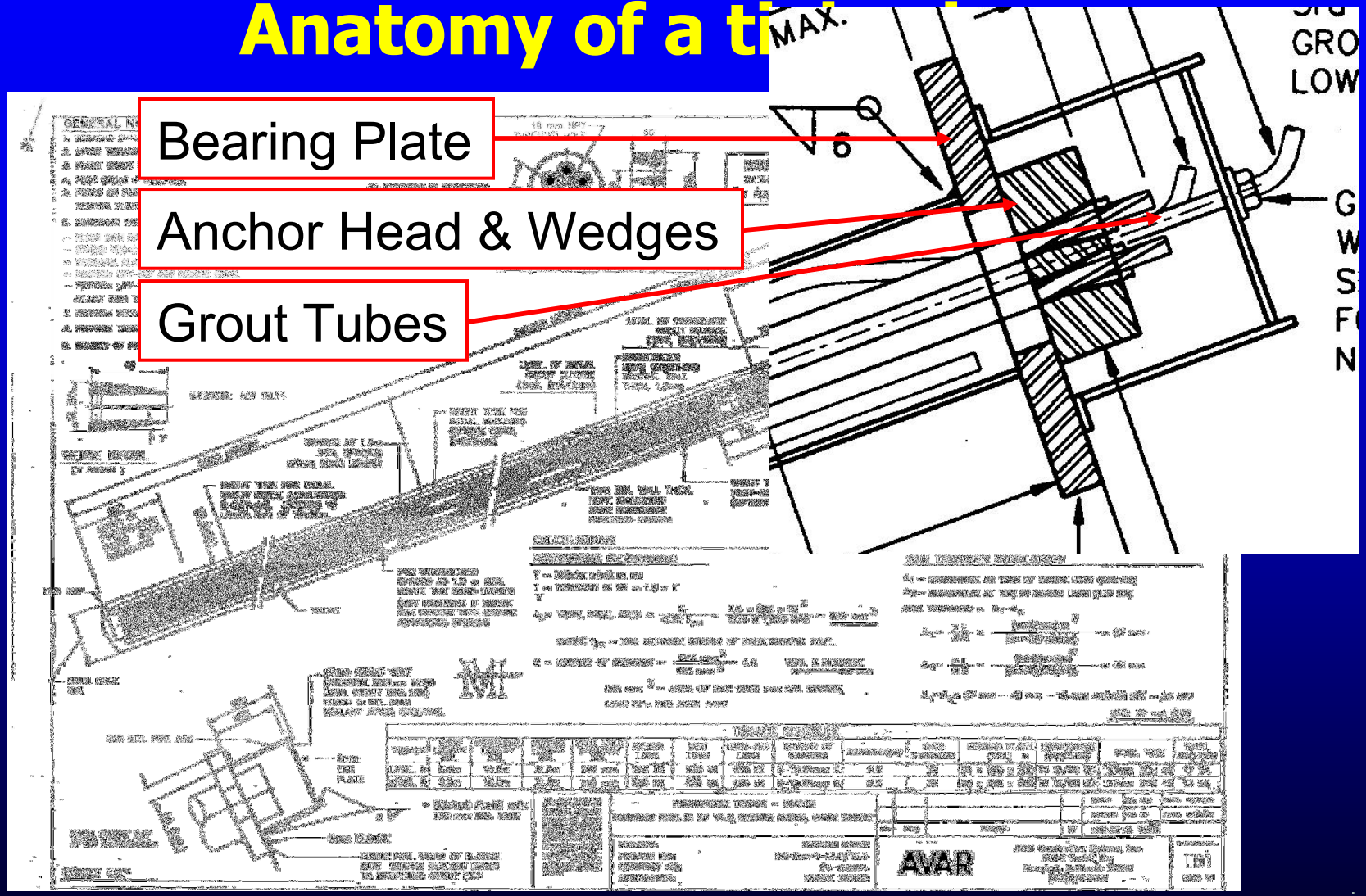

Anatomy of a tieback

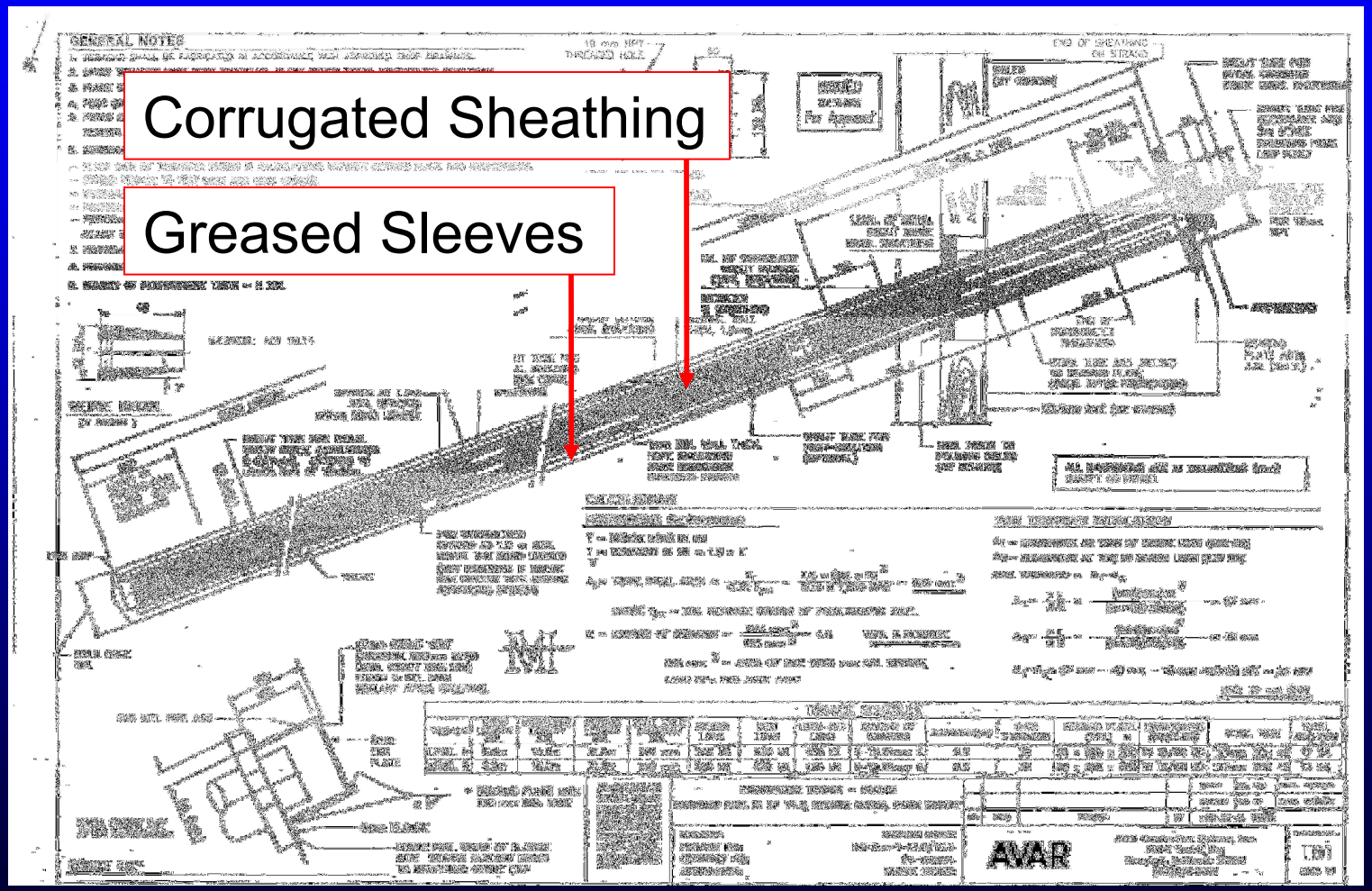

Anatomy of a tieback

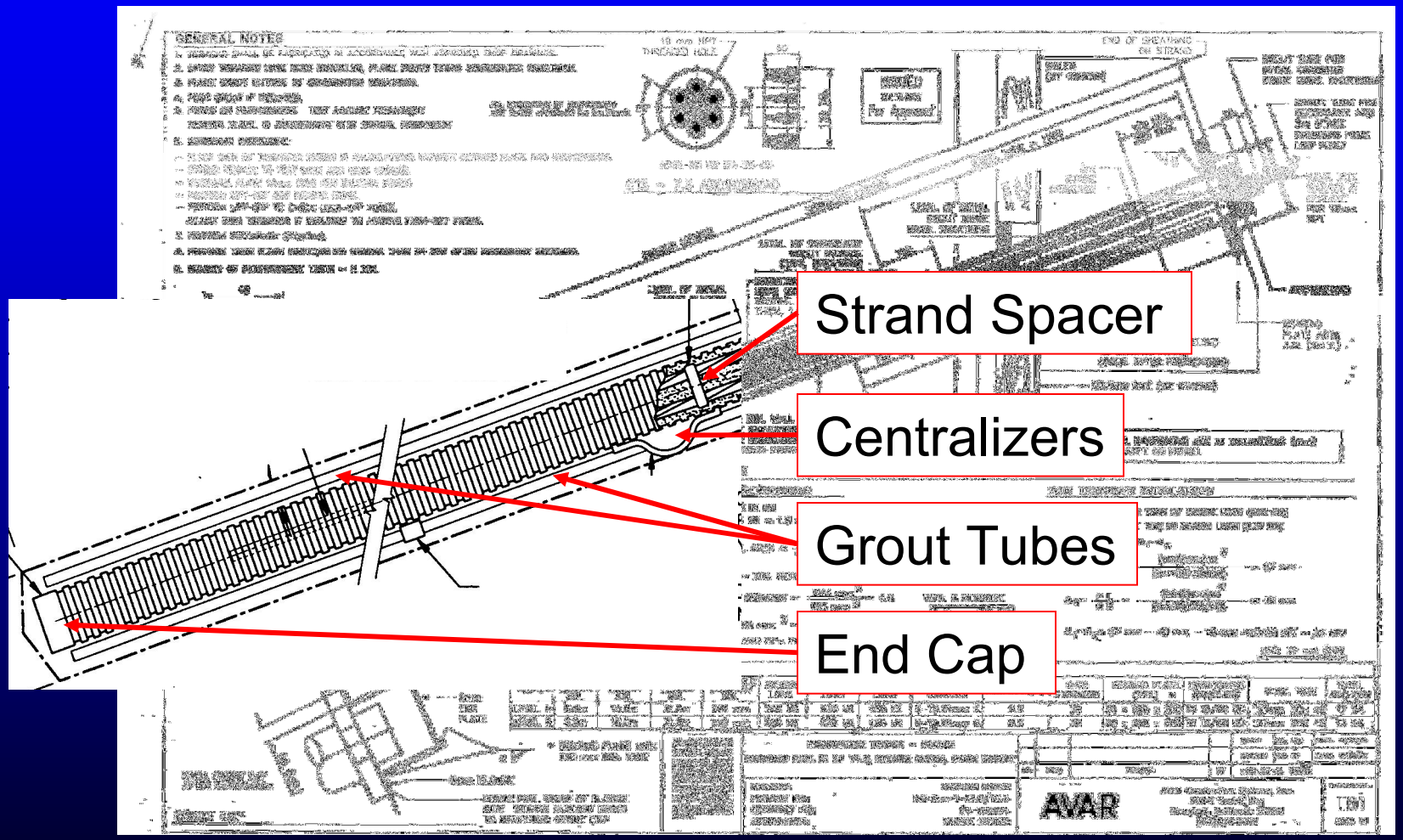

Anatomy of a tieback

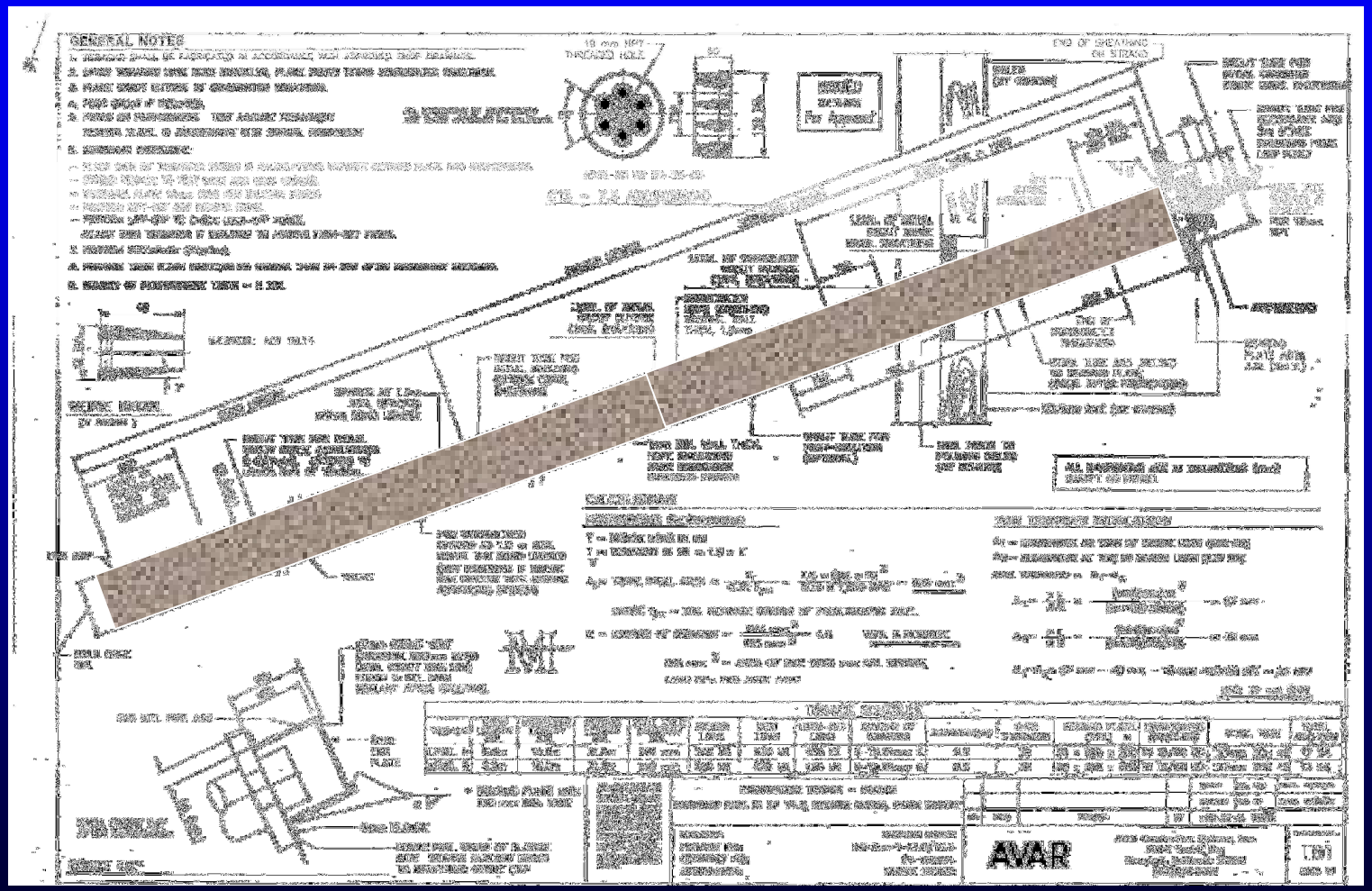

Anatomy of a tieback

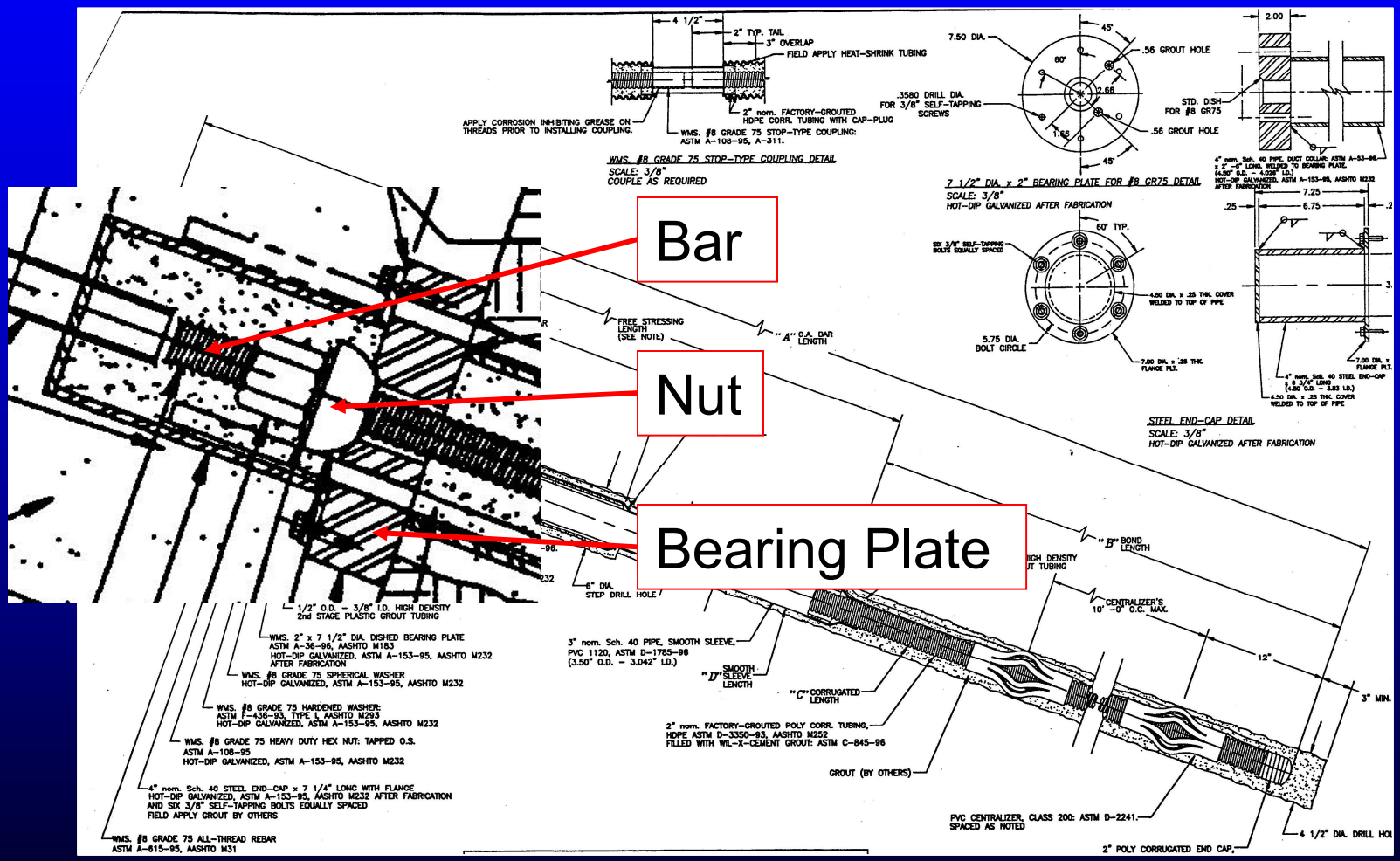

Review of Tieback Walls

1. Review plan for submittal for completeness
2. Determine Ka and Kp
3. Develop pressure diagrams
4. Determine forces

Review of Tieback Walls

5. Determine the moment around the tieback
6. Solve for depth (D), for both lateral and vertical loads, and tieback force (T_H)
7. Find the point of zero shear and check the pile section
8. Check anchor capacity

8. Check anchor capacity

- Variables that affect anchor capacity
  - Tendon type and size
  - Soil characteristics
  - Grouting method
  - Size and shape of drilled hole
  - Length of grouted anchor

Review of Tieback Walls

9. Check miscellaneous details
10. Check adequacy of tieback test procedure
11. Review corrosion proposal
12. Consider the effects of wall deflection, and subsequent soil settlement on any surface feature behind the shoring wall

Example Problem

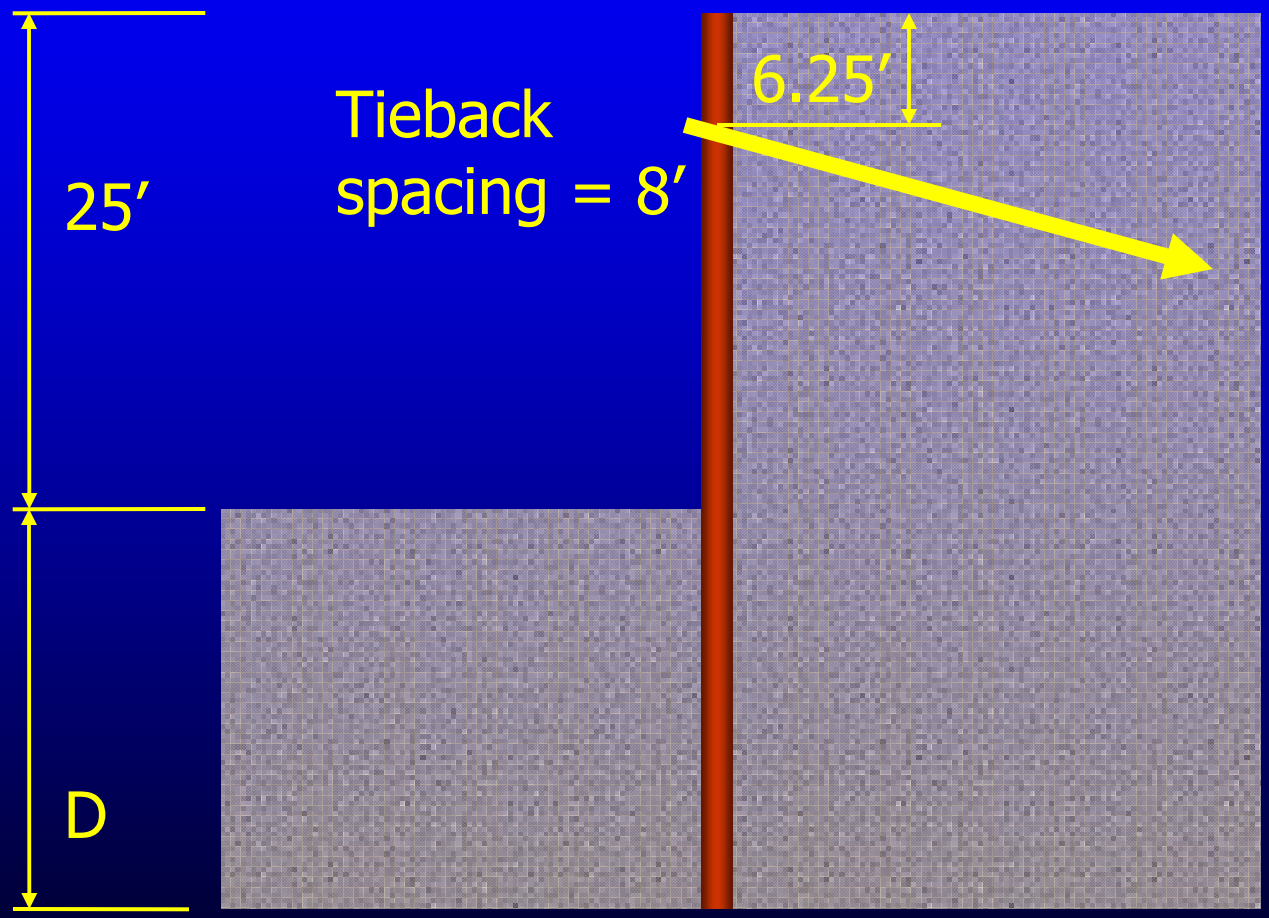

$\phi = 34$

$\delta = 0$

$\gamma = 120$ psf

$\beta = 0$

Find Ka and Kp

$$Ka = \frac{\cos^2(\phi)}{\cos(\delta)\left[1+\sqrt{\frac{\sin(\phi+\delta)(\sin(\phi-\beta)}{\cos(\delta)\cos(\beta)}}\right]^2}$$

Find Ka and Kp

$$Ka = \frac{\cos^2(34)}{\cos(0)\left[1+\sqrt{\frac{\sin(34+0)(\sin(34-0)}{\cos(0)\cos(0)}}\right]^2}$$

Find Ka and Kp

Ka = .283

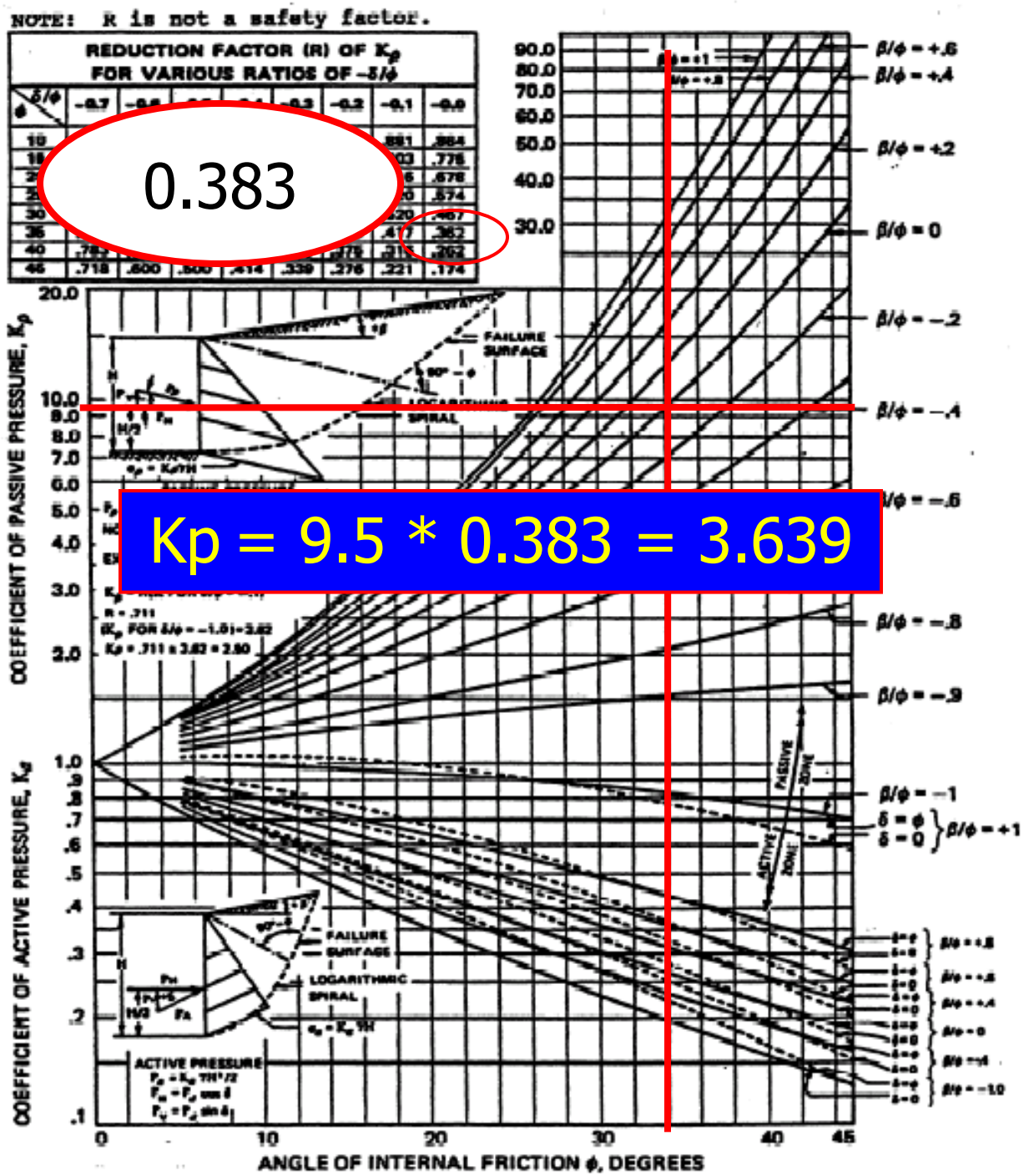
NOTE: R is not a safety factor.
REDUCTION FACTOR (R) OF K_p
FOR VARIOUS RATIOS OF $-\delta/\phi$
0.383
Kp = 9.5 * 0.383 = 3.639
COEFFICIENT OF PASSIVE PRESSURE, K_p
COEFFICIENT OF ACTIVE PRESSURE, K_a
ANGLE OF INTERNAL FRICTION ϕ, DEGREES
FAILURE SURFACE
LOGARITHMIC SPIRAL
ACTIVE PRESSURE
PASSIVE ZONE
ACTIVE ZONE
$\beta/\phi = +.6$
$\beta/\phi = +.4$
$\beta/\phi = +.2$
$\beta/\phi = 0$
$\beta/\phi = -.2$
$\beta/\phi = -.4$
$\beta/\phi = -.6$
$\beta/\phi = -.8$
$\beta/\phi = -.9$
$\beta/\phi = -1$
$\delta = \phi$
$\delta = 0$
$\beta/\phi = +1$

Find Ka and Kp

Ka = 0.283

Kp = 3.639

Develop Pressure Diagram

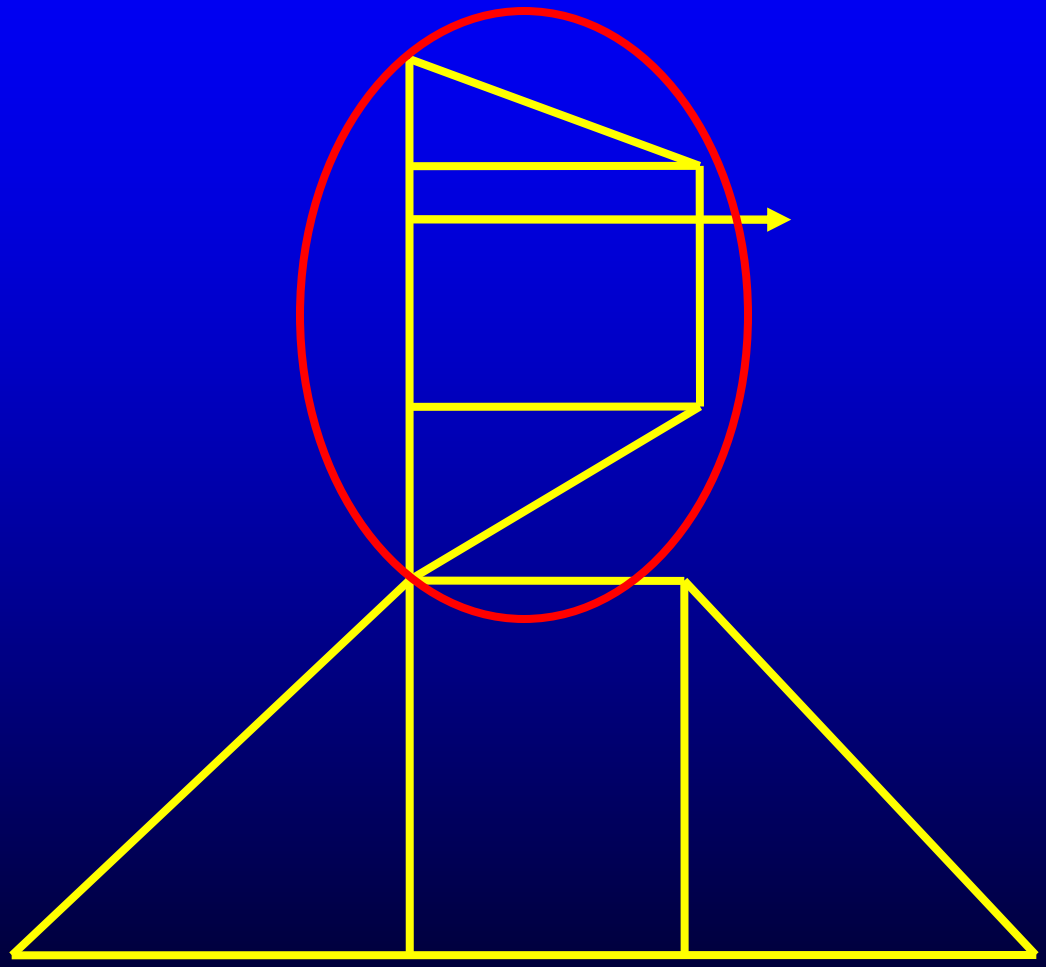

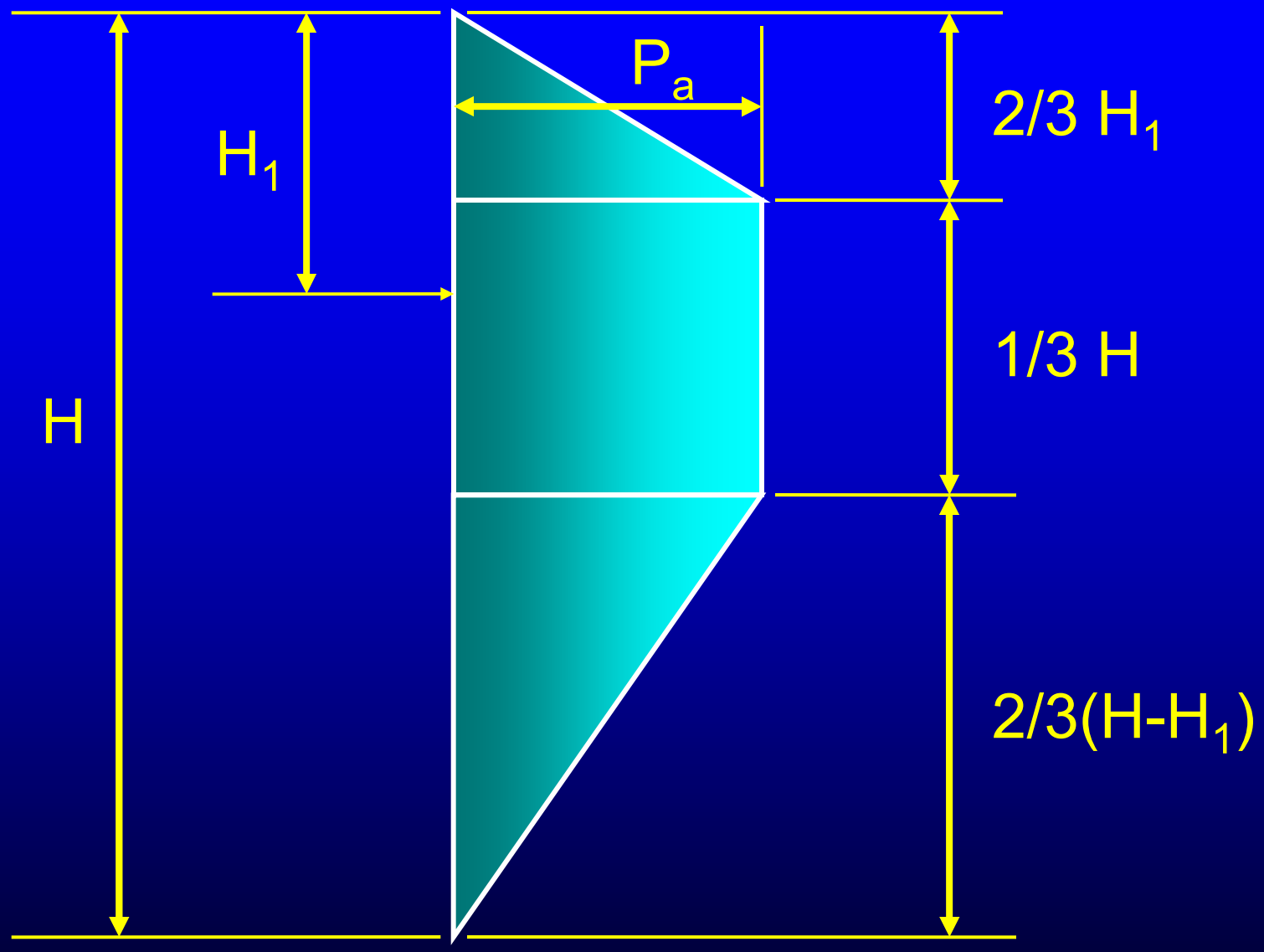
P_a
H_1
H
2/3 H_1
1/3 H
2/3(H-H_1)

$P_{total} = ½ Ka\gamma H^2$

$P_{total} = ½ *0.283*120*25^2$

$P_{total} = 10612.5$ plf

$P_a = 1.3 P_{total} /(2/3H)$

$P_a = (1.3)10612.5/(2/3(25))$

$P_a = 827.77$ psf

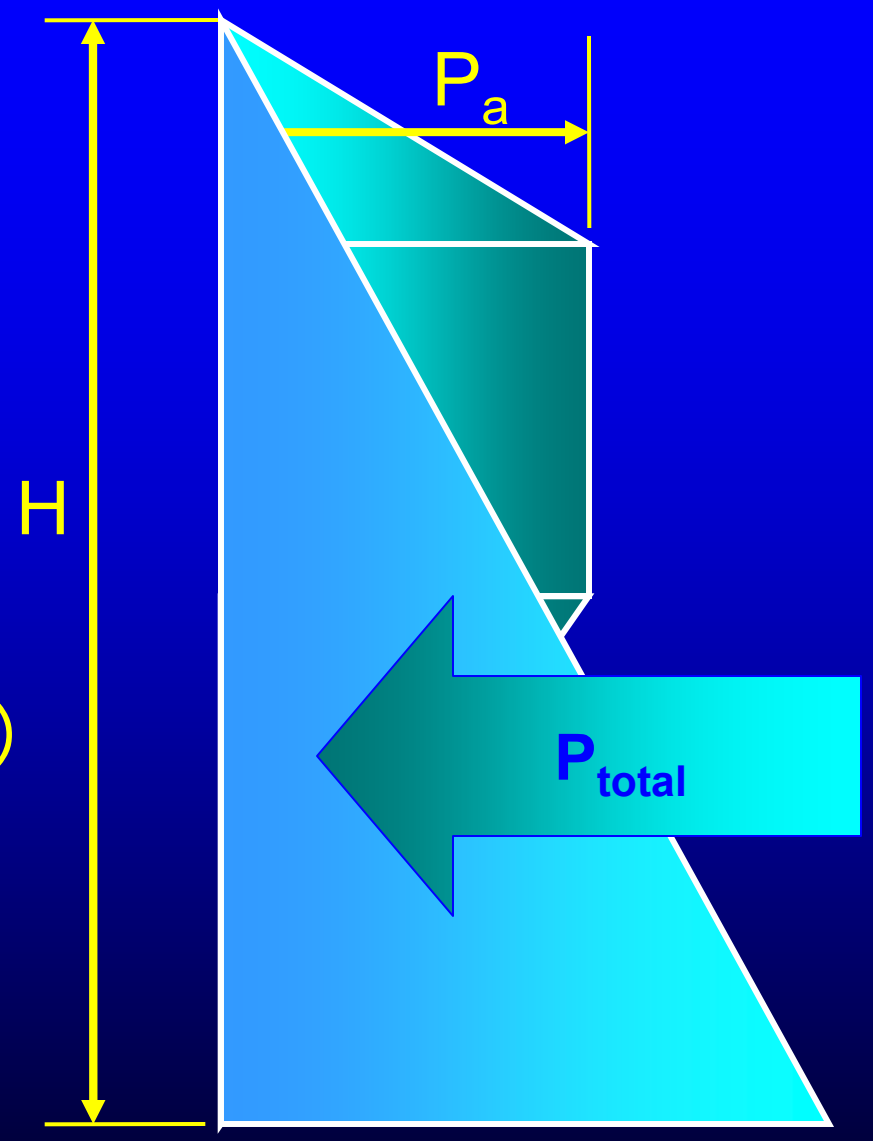

Determine Forces

P_1 = ½ Pa (2/3 H1)

P_1 = ½ 827.77 (2/3 6.25)

P_1 = 1724.52 plf

P_2 = Pa (1/3 H)

P_2 = 827.77(1/3 25)

P_2 = 6898.08 plf

P_3 = ½ Pa (2/3)(H-H1)

P_3 = ½ 827.77 (2/3)(25-6.25)

P_3 = 5173.56 plf

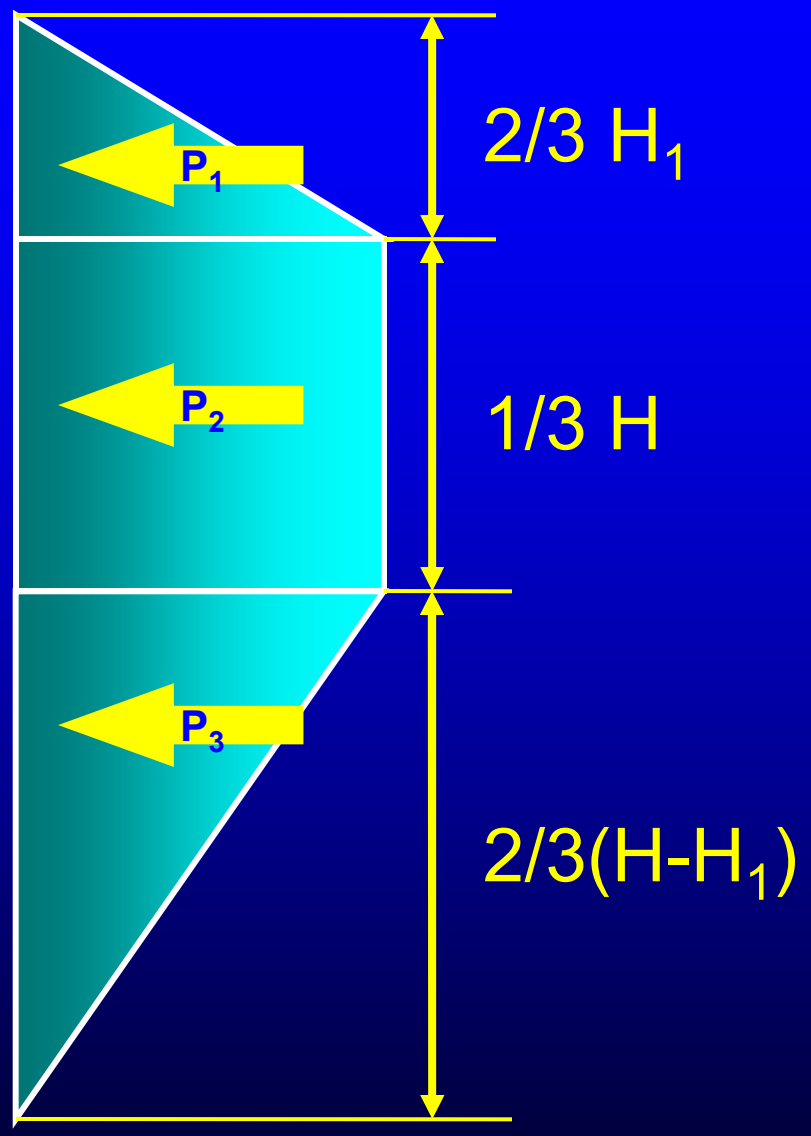

Determine Forces

P_1 = 1724.52 plf

P_2 = 6898.08 plf

P_3 = 5173.56 plf

$P_4 = HD\gamma Ka$

$P_5 = ½\ Ka\gamma D^2$

$P_S = 72(D+H)$

$P_7 = ½\ Kp\gamma D^2$

T_H = Unknown

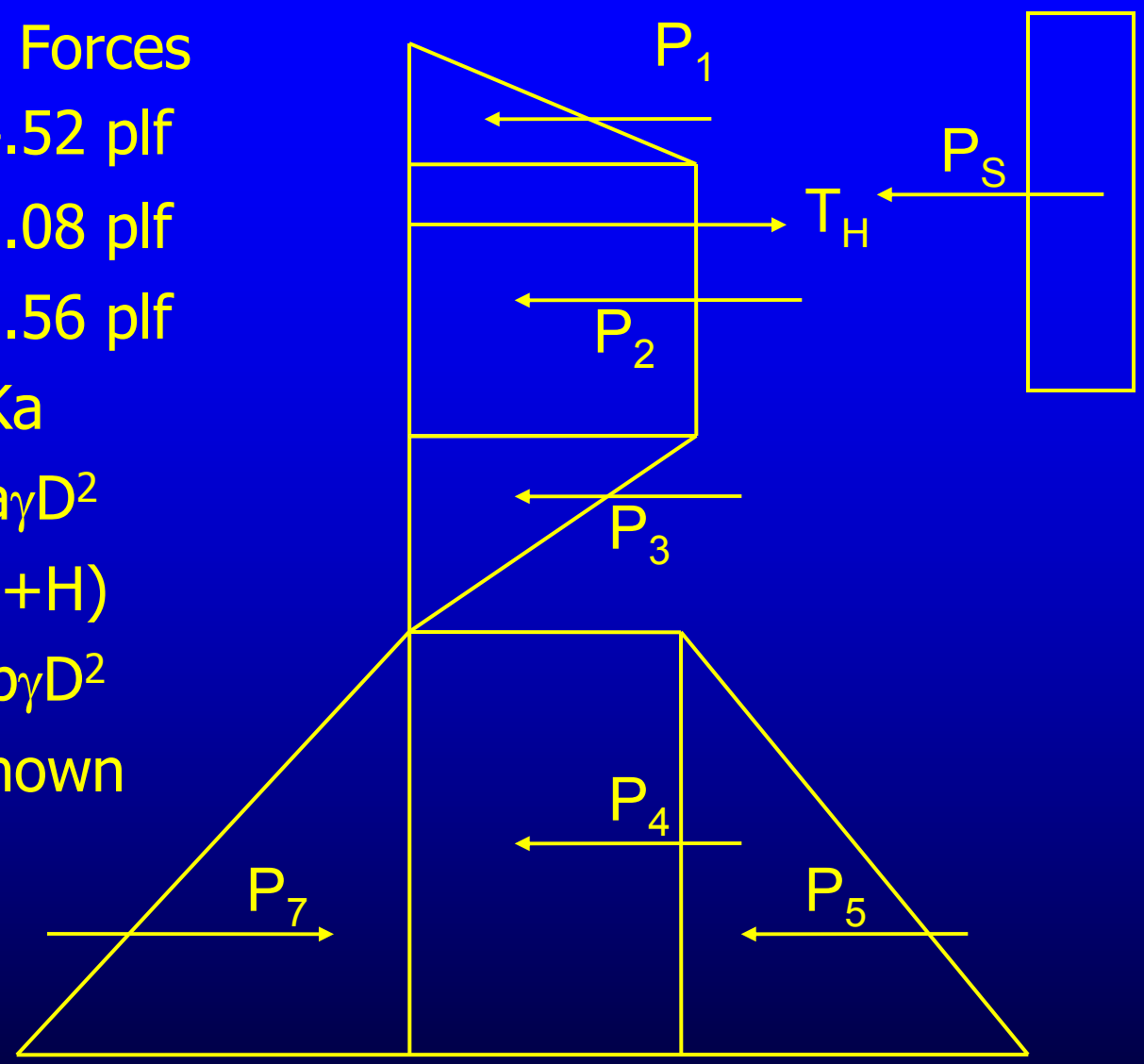

Determine Forces

P_1 = 1724.52 plf

P_2 = 6898.08 plf

P_3 = 5173.56 plf

P_4= 25 D (120) (0.283)

P_5 = ½ (0.283) (120) D^2

P_S = 72(10)

P_7 = ½ 3.639 (120) D^2

T_H = Unknown

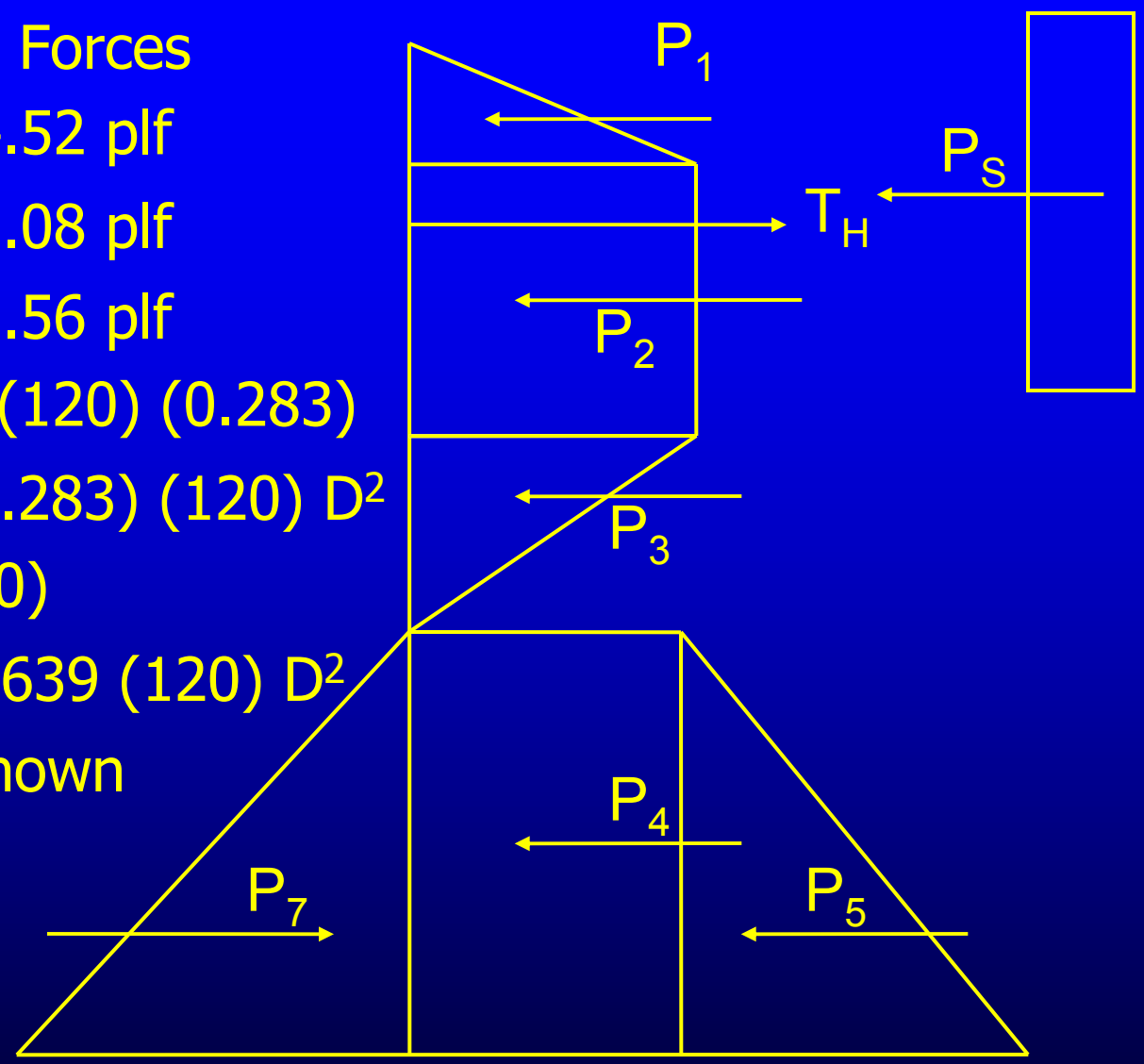

Determine Forces

P_1 = 1724.52 plf

P_2 = 6898.08 plf

P_3 = 5173.56 plf

P_4 = 849 D plf

P_5 = 16.98 D^2 plf

P_S = 720 plf

P_7 = 218.34 D^2 plf

T_H = Unknown

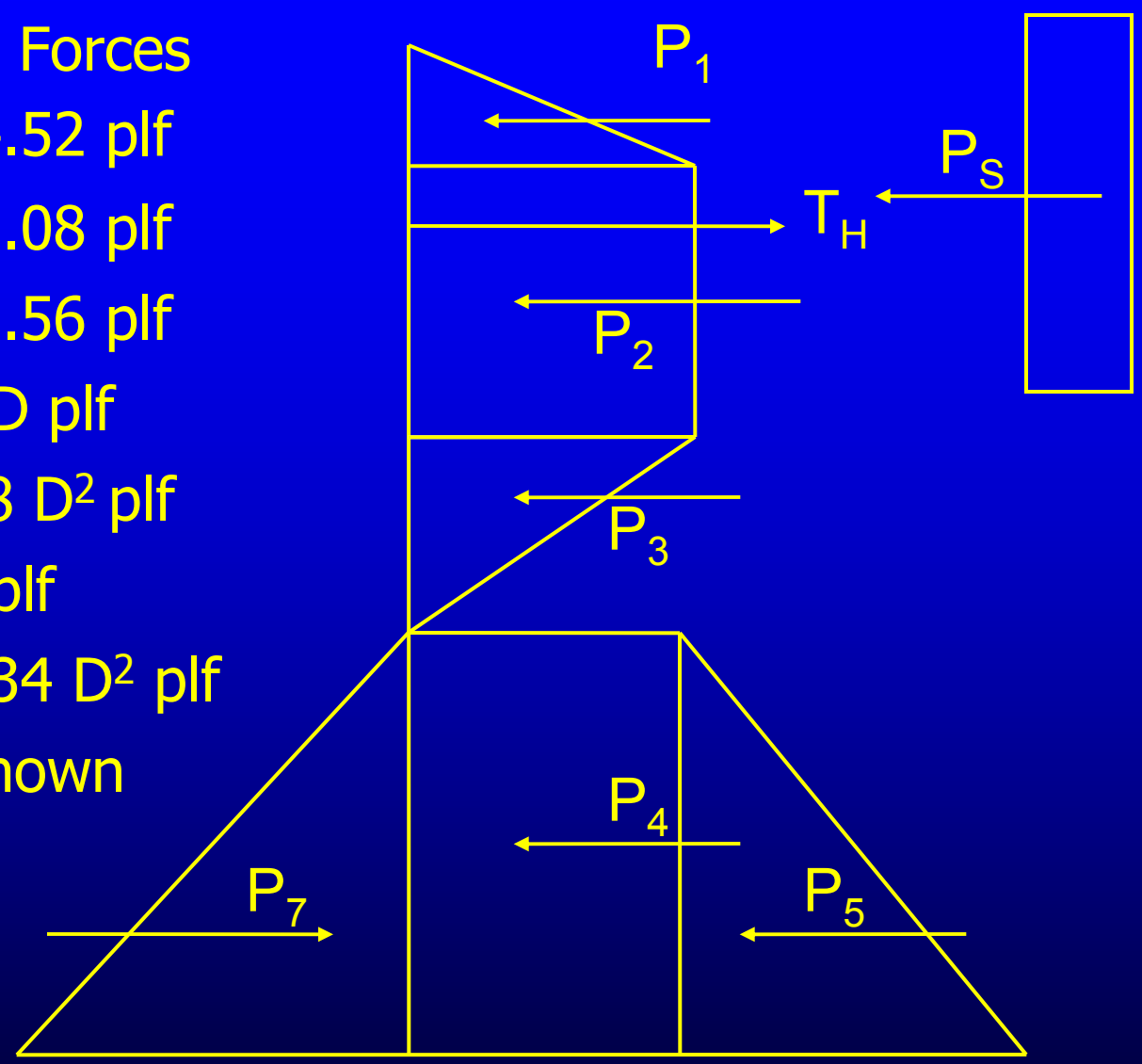

Sum moments about TH
(CCW+)

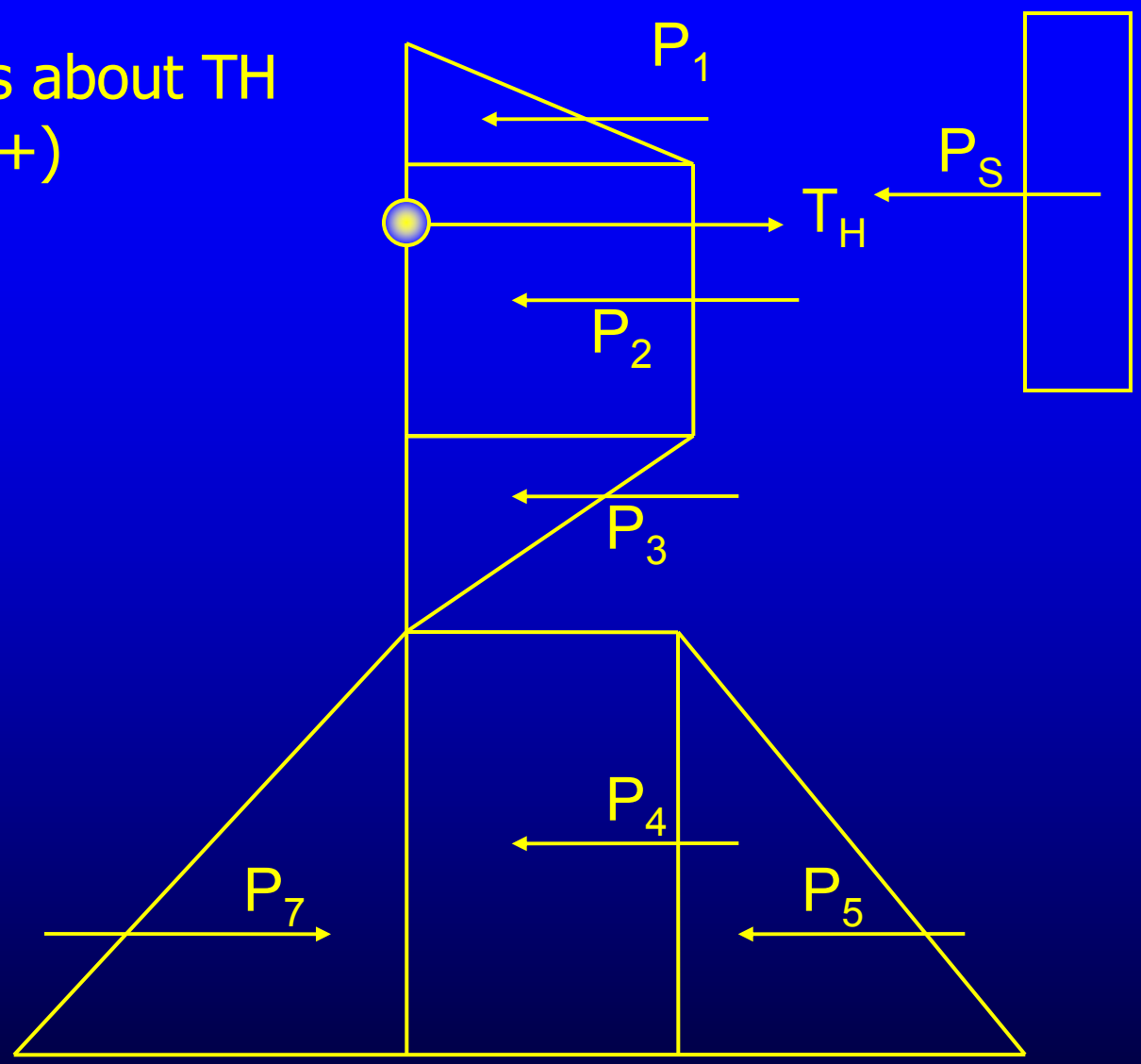

Sum moments about T_H (CCW+)

$M_1 = SF * P_1 * (1/3 *(2/3H1) + 1/3H1)$

$M_2 = SF * P_2 * (1/3\ H/2 – 1/3\ H1)$

$M_3 = SF * P_3 * (1/3(2/3(H-H1))+ (1/3)H – (1/3)H1)$

$M_4 = SF * P_4 * (D/2 + H - H1)$

$M_5 = SF * P_5 * (2/3\ D + H - H1)$

$M_6 = SF * P_S * (H_1 – 5)$

$M_7 = P_7 * (2/3\ D + H - H1)$

Sum moments about T_H (CCW+)

$M_1 = 1.3*1724.52*(1/3*2/3(6.25)+1/3(6.25))$

$M_2 = 1.3 * 6898.08 * (1/3(25)/2 – 1/3(6.25))$

$M_3 = 1.3*5173.56*(1/3(2/3(25-6.25))+(1/3)25–(1/3)6.25)$

$M_4 = 1.3 * 849D * (D/2+25-6.25)$

$M_5 = 1.3 * 16.98D^2(2/3D+18.75)$

$M_6 = 1.3 * (720)(6.25 – 5)$

$M_7 = 218.34D^2(2/3D+18.75)$

Sum moments about T_H (CCW+)

M_1 = 7784.29 ft-lbs

M_2 = 18682.3 ft-lbs

M_3 = 70058.63 ft-lbs

$M_4 = 551.85D^2 + 20694.38D$ ft-lbs

$M_5 = 14.72D^3 + 413.89D^2$ ft-lbs

M_6 = 1170 ft-lbs

$M_7 = 145.56D^3 + 4093.88D^2$ ft-lbs

$\Sigma M_{TH} = 0 = M1 - M2 - M3 - M4 - M5 + M6 + M7$

$\Sigma M_{TH} = 130.84D^3 + 3128.14D^2 - 20694.38D - 79786.64 = 0$

Now, solving for D

D = 7.58′

Sum Moments about T_H

The moments must be summed about T_H a second time using FS = 1.0

$\Sigma M_{TH} = 0$ and solve for $D_{1.0}$

$D_{1.0} = 6.15'$

$\Sigma F_x = 0$

$$T_H - P_1 - P_2 - P_3 - P_4 - P_5 - P_S + P_7 = 0$$

$$T_H = 1724.52 + 6898.08 + 5173.56 + 849(6.15) + 16.98(6.15)^2 + 720.00 - 218.34(6.15)^2$$

$$T_H = 12122 \text{ plf}$$

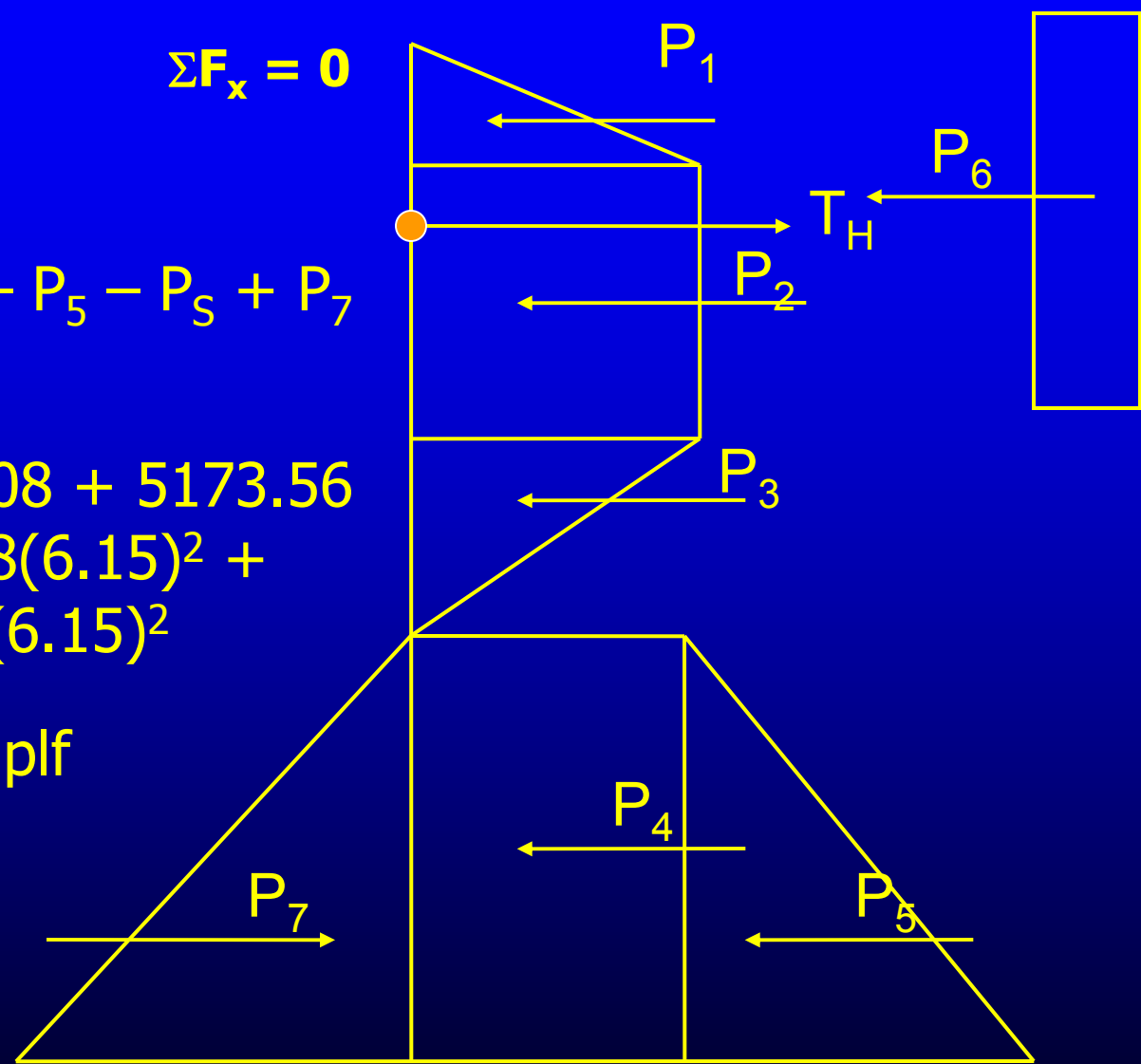

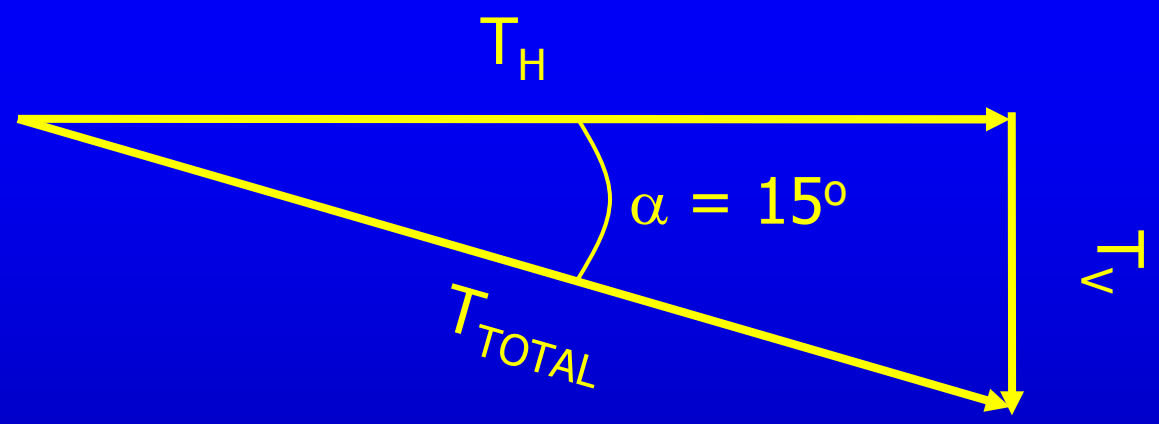

$T_H = 12122$ plf

$T_{TOTAL} = T_H \ / \cos(15) = 12549$ plf

$T_V = T_H * \tan(15) = 3247$ plf

Check Vertical Forces

$T_V < N / 100 (2000) (\# \text{ of sides}) (D) / SF$

Table 1-1 Properties of Granular Soils

Apparent Density	Relative Density (%)	SPT N_{60} (blows/ft)	Friction Angle, ϕ (deg)	Moist Unit Wt (pcf)	Sub. Unit Weight (pcf)
Very Loose	0-15	0-4	<28	<100	<60
Loose	16-35	5-10	28-30	95-125	55-65
Medium Dense	36-65	11-30	31-36	110-130	60-70
Dense	66-85	31-50	37-41	110-140	65-85
Very Dense	86-100	>50	>41	>130	>75

Check Vertical Forces

T_V < N / 100 (2000) (# of sides) (D) / SF

22/100*2000*2*7.58/2

= 3335 plf > T_V = 3247 <u>OK</u>

Find Maximum Shear

Upper Shear:

T_{1U} = ½ (828) (4.167) + 828 (2.083)

= 3449 lbs

Lower Shear:

T_{1L} = ½ (828) (10.42) + 828 (5) + 849 (6.15) + ½ (120) (0.283-3.639) $(6.15)^2$

= 6056 lbs

Find the point of zero shear

Assume X will be somewhere in the lower triangle

Solve for the slop of the load line

Solve for X

79.44x2 – 1655.54X + 3834 = 0

X = 2.65′

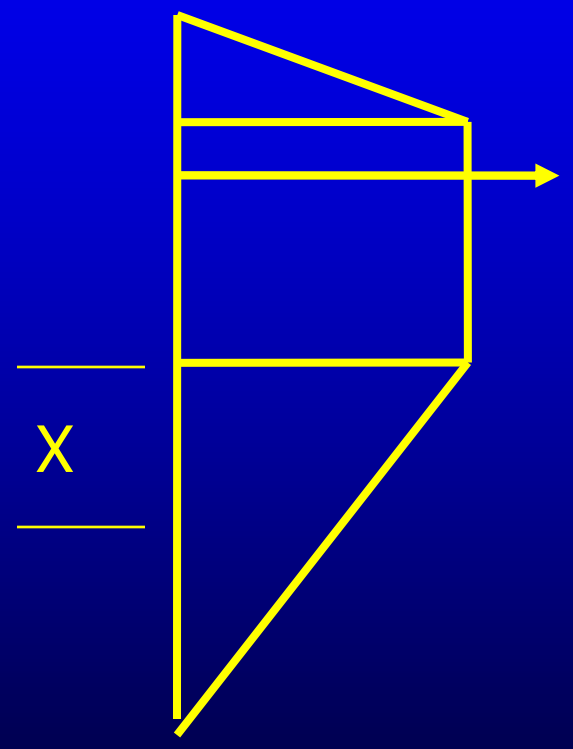

Find the maximum moment

Take the moment about the point of zero shear

M_{max} = 30,027ft-lbs

Find the required sheet section

$$S_{req} = M_{max} / F_b$$

$$S_{req} = 30{,}027\ (12) / 25000$$

$$S_{req} = 14.4\ in^3$$

Check anchor

T_{design} = Ttotal * Tieback Spacing

T_{design} = 12122 * 8 = 96.976 kips

T_{proof} = 1.3(T_{design}) = 126.069 kips

A_{req} = 96.976 / 0.6(150) = 1.08 in^2

= 126.069 / 0.8(150) = 1.05 in^2

Check anchor length

$\psi = 45 - \phi/2$

$= 45 - 34 / 2$

$= 28$

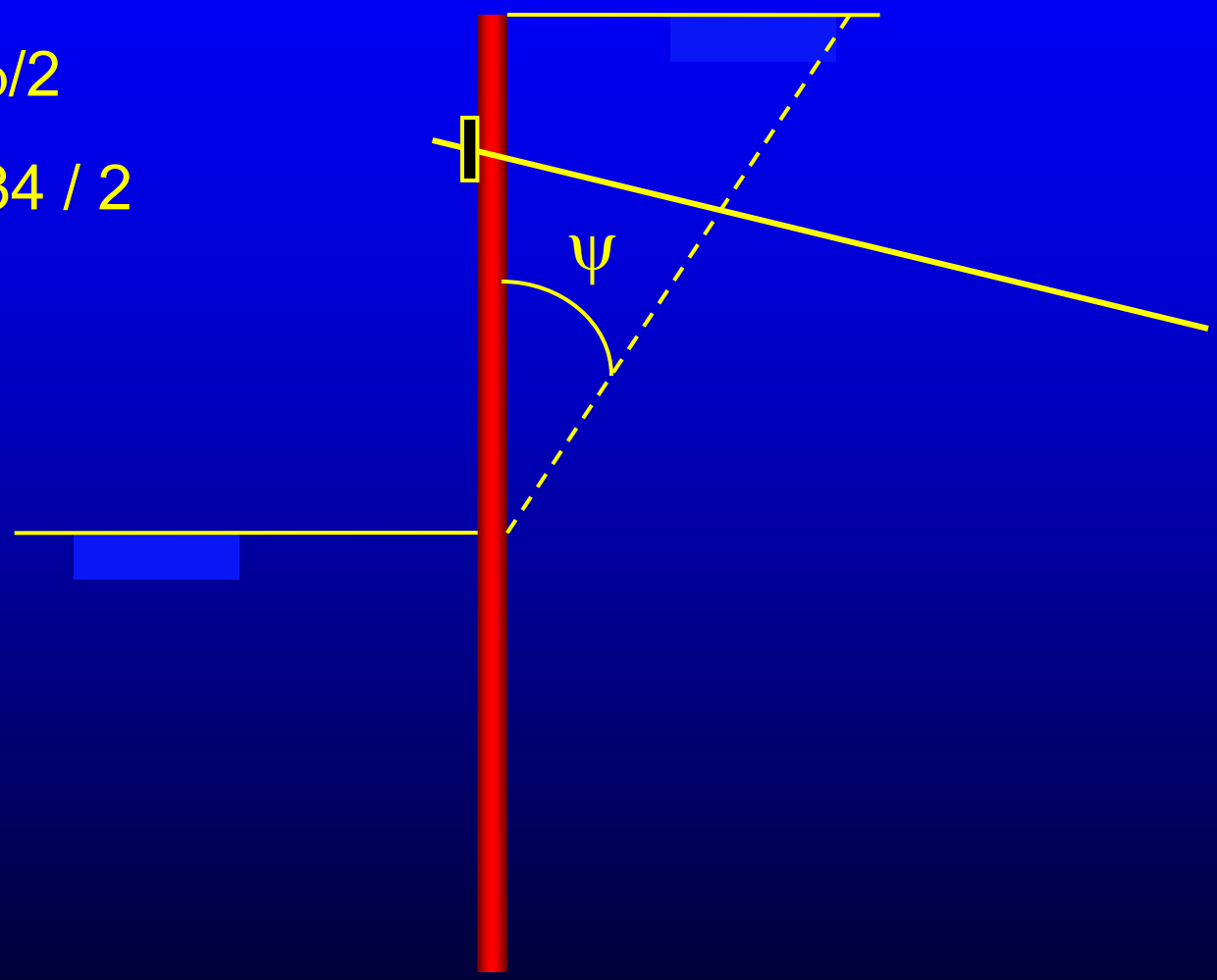

Check anchor length

$$L_{umin} = \frac{(H - H_1)\sin(\psi)}{\sin(180 - (90 - \alpha) - \psi)}$$

$$L_{umin} = \frac{(18.75)\sin(28)}{\sin(180 - (90 - 15) - 28)}$$

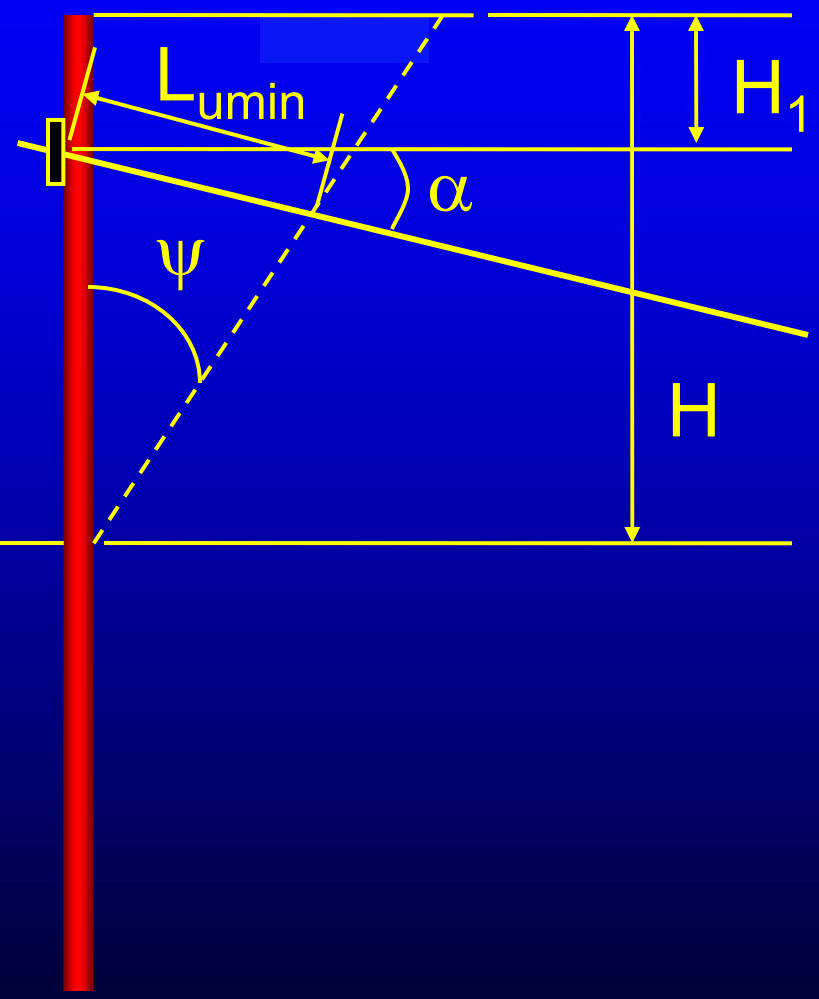

L_{umin} = 9.03 + 5 (FS)

= 14.03

Check anchor length

L_b is provided by the contractor.

For this example, 40 feet will be used.

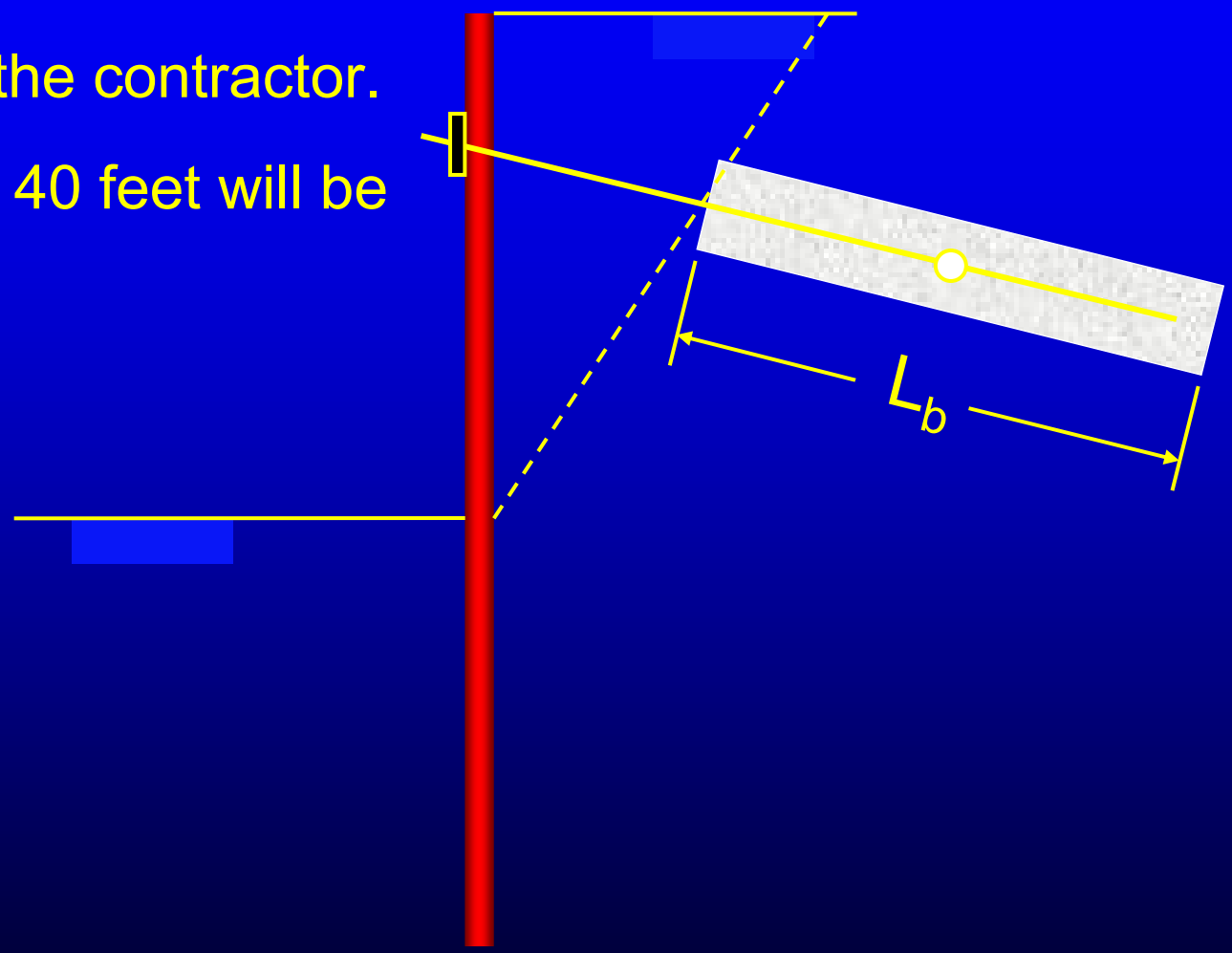

Check System Stability

$$a / H+D > 1$$

$$\frac{(14+40)\cos(15)}{(25 + 7.58)}$$

$$= 1.60 \ \underline{\text{OK}}$$

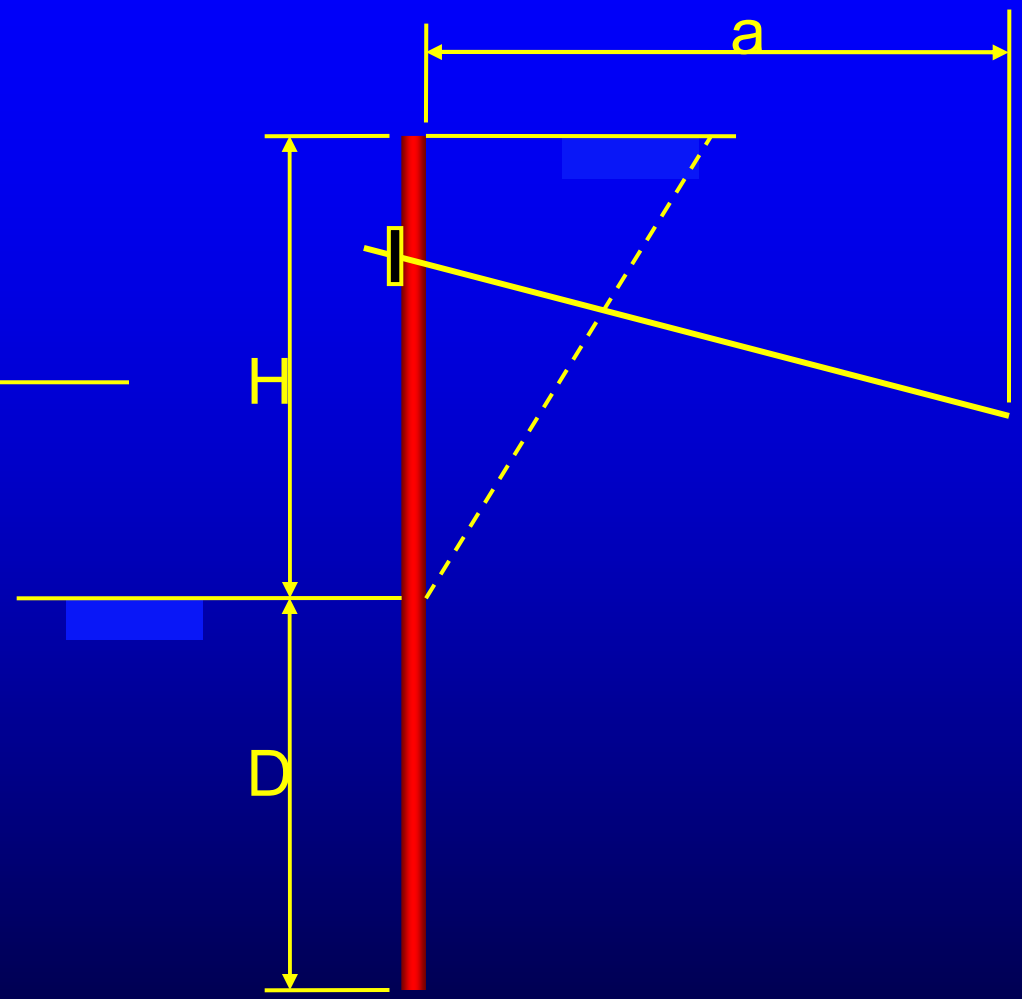

Check Miscellaneous Details

- Structural Details
  - Walers
  - Welds
  - Connections
- Construction Sequence

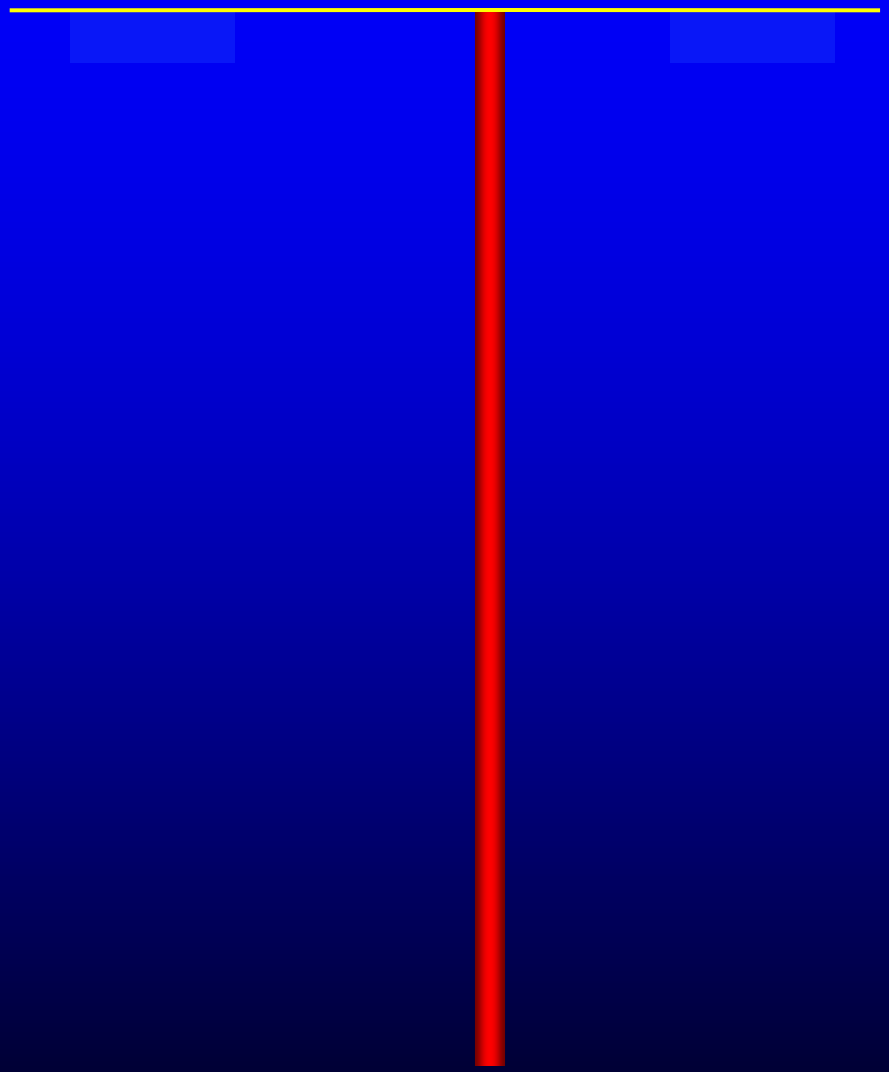

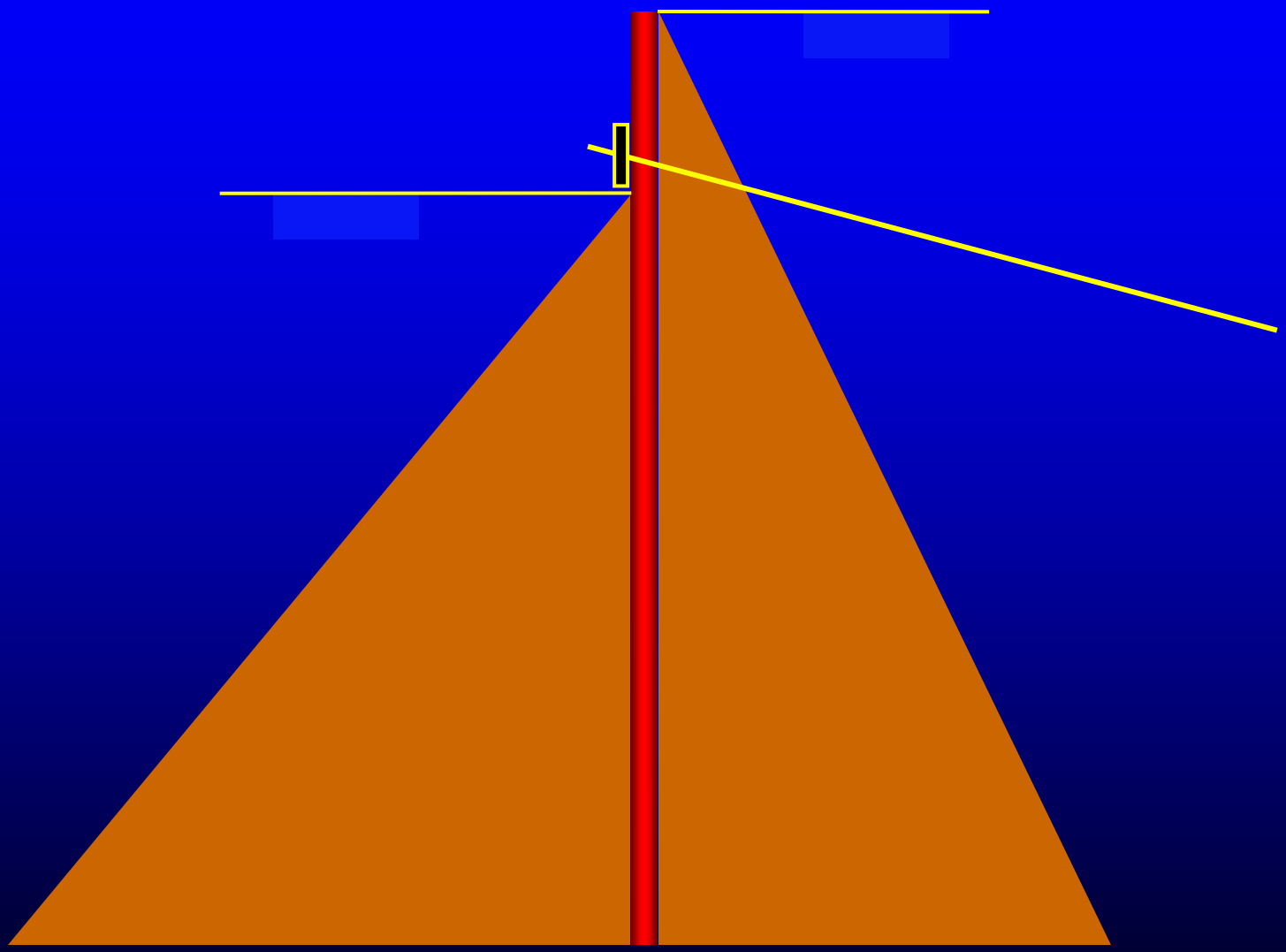

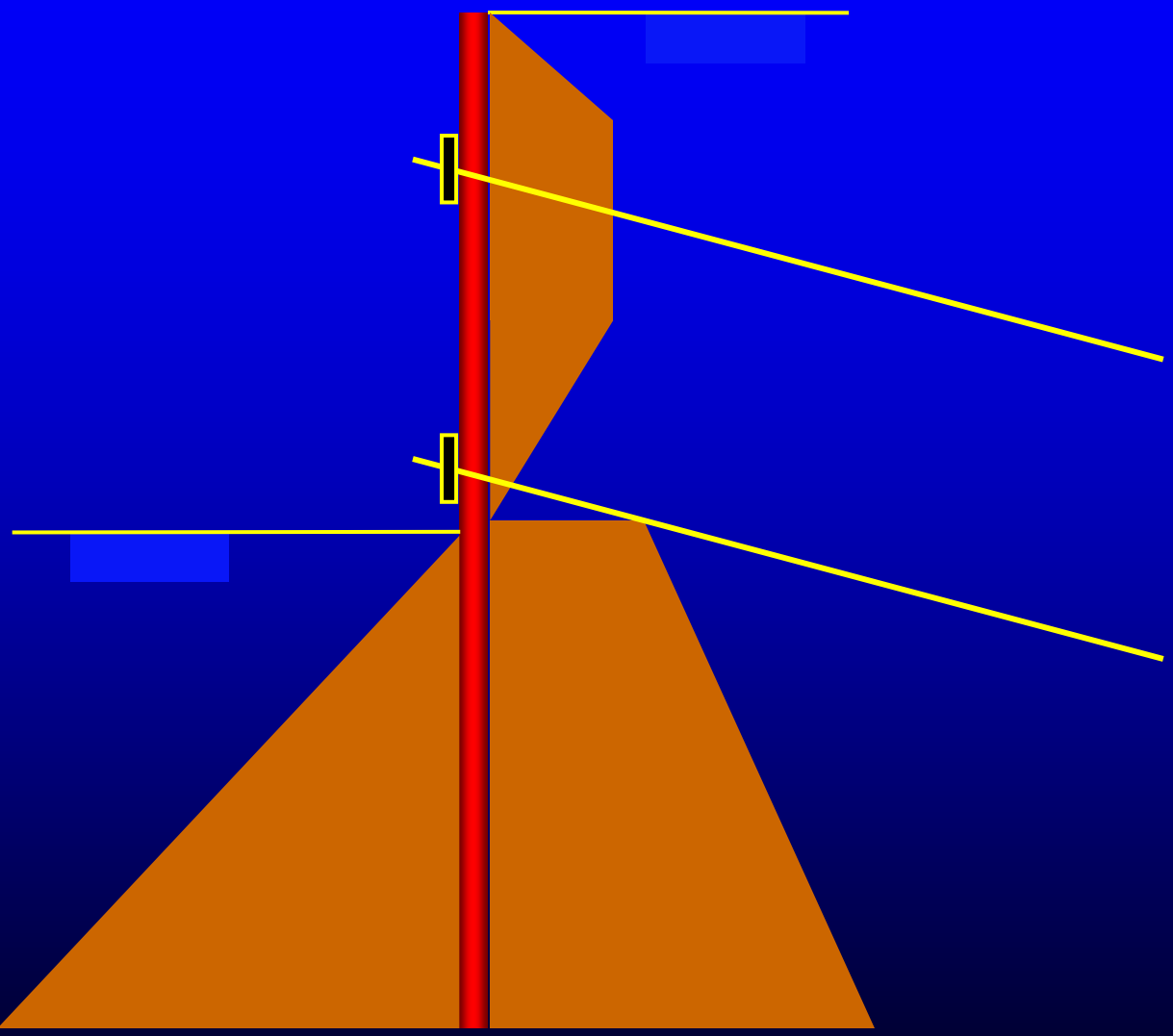

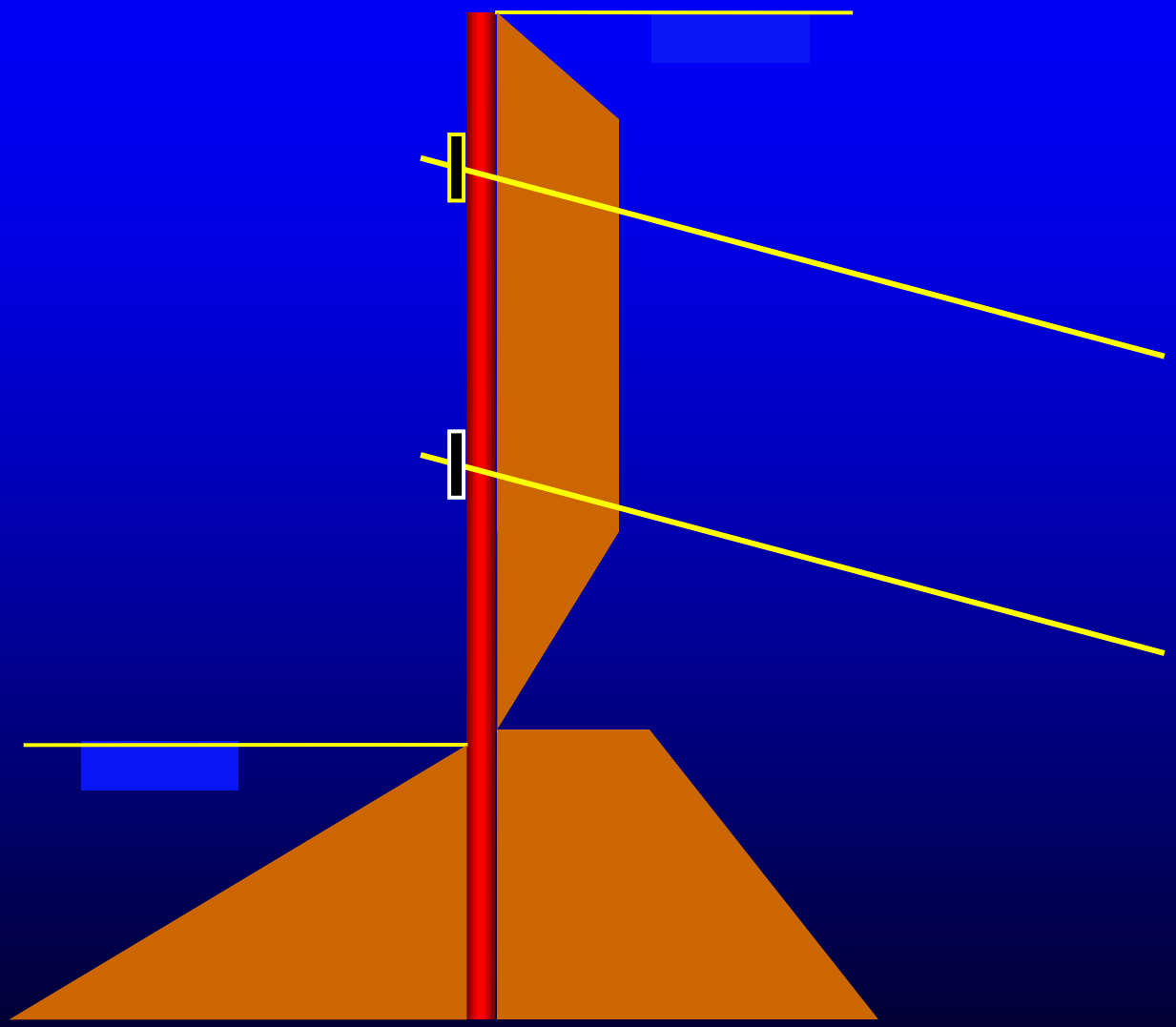

Construction Considerations

- Installation of piles and excavation to first tieback level
  - Check the pile section and length. Make sure to get the proper embedment
  - Check excavation depth. Do not over-excavate

Construction Considerations

- Dr
  -
  -

Construction Considerations

- Drilling of tiebacks (cont.)
  - Note any differences in soil properties or groundwater levels
  - Verify hole depth and diameter and estimate grout volumes to ensure proper grouting
  - Check for caving of the shafts

Construction Considerations

- Installation of Tiebacks
  - Inspect the tieback assembly for damage
  - Check the bonded length
  - Ensure that the centralizers are installed
  - Re-inspect the hole for caving
  - Make sure the tieback is installed to the required depth

Construction Considerations

- Grouting of Tiebacks
  - Check the mix design
  - Check to see that the equipment is in order
  - Grout Cone Test (CTM 541)
  - Check grout volumes

Construction Considerations

- Stressing and Testing Tiebacks
  - Check the bearing surface
  - Check the anchor head and wedges for damage
  - Check the contractor's jack information and verify that it is on the approved list
  - Confirm the results of the testing procedure

Construction Considerations

- Testing Temporary Tiebacks
  - Contractor's Test Procedure
  - Proof Tests
  - Performance Tests

Construction Considerations

- Testing Temporary Tiebacks
  - **Contractor's Test Procedure**
  - Proof Tests
  - Performance Tests

Contractor's Test Procedure

- The Contractor proposes the test procedure and criteria for acceptance of temporary tiebacks

Contractor's Test Procedure

- Included in the procedure:

Number tested

Duration of test load

Allowable movement or load loss

What to do if a test fails

What is an acceptable procedure?

Construction Considerations

- Testing Temporary Tiebacks
  - Contractor's Test Procedure
  - **Proof Tests**
  - Performance Tests

PROOF TESTS

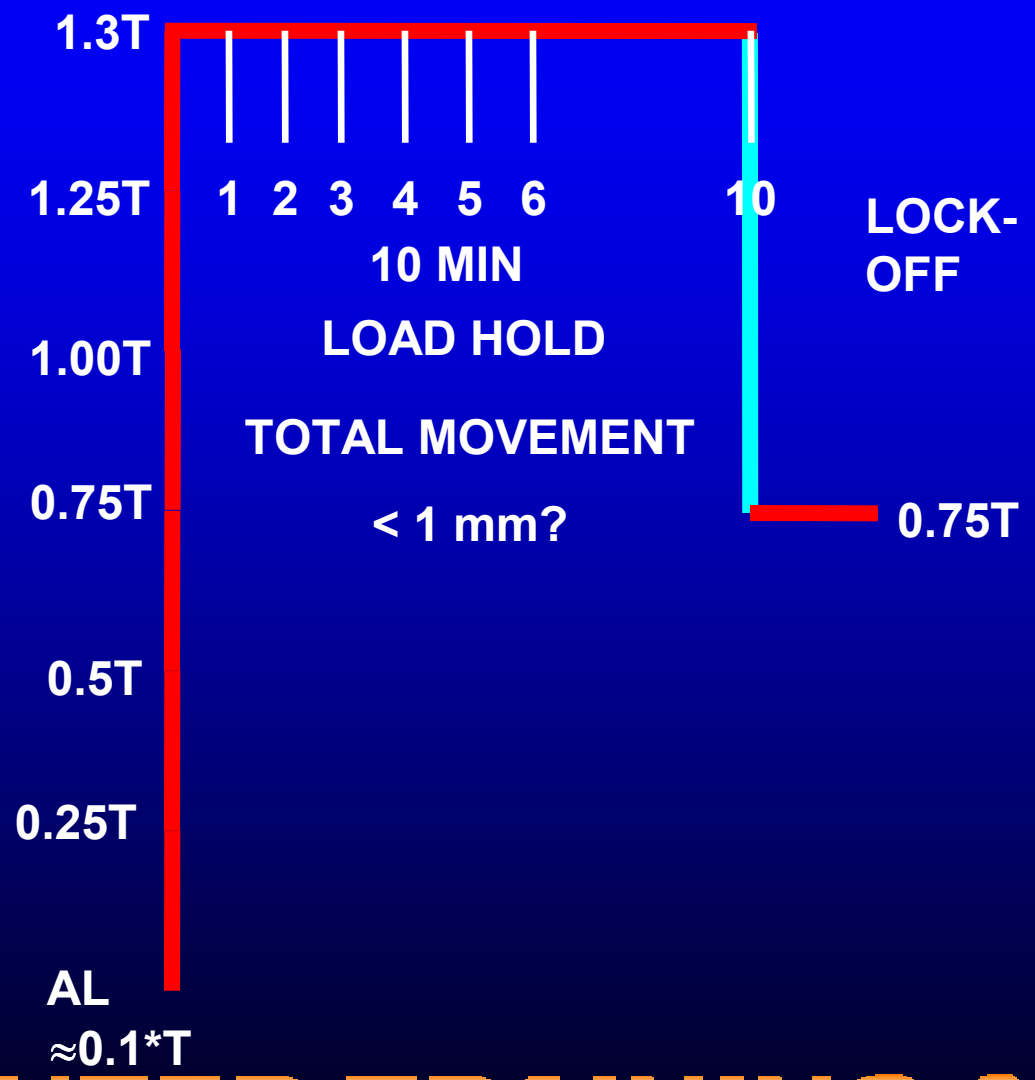
1.3T
1.25T
1.00T
0.75T
0.5T
0.25T
AL
≈0.1*T
1 2 3 4 5 6
10
10 MIN
LOAD HOLD
TOTAL MOVEMENT
< 1 mm?
LOCK-
OFF
0.75T

PROOF TESTS

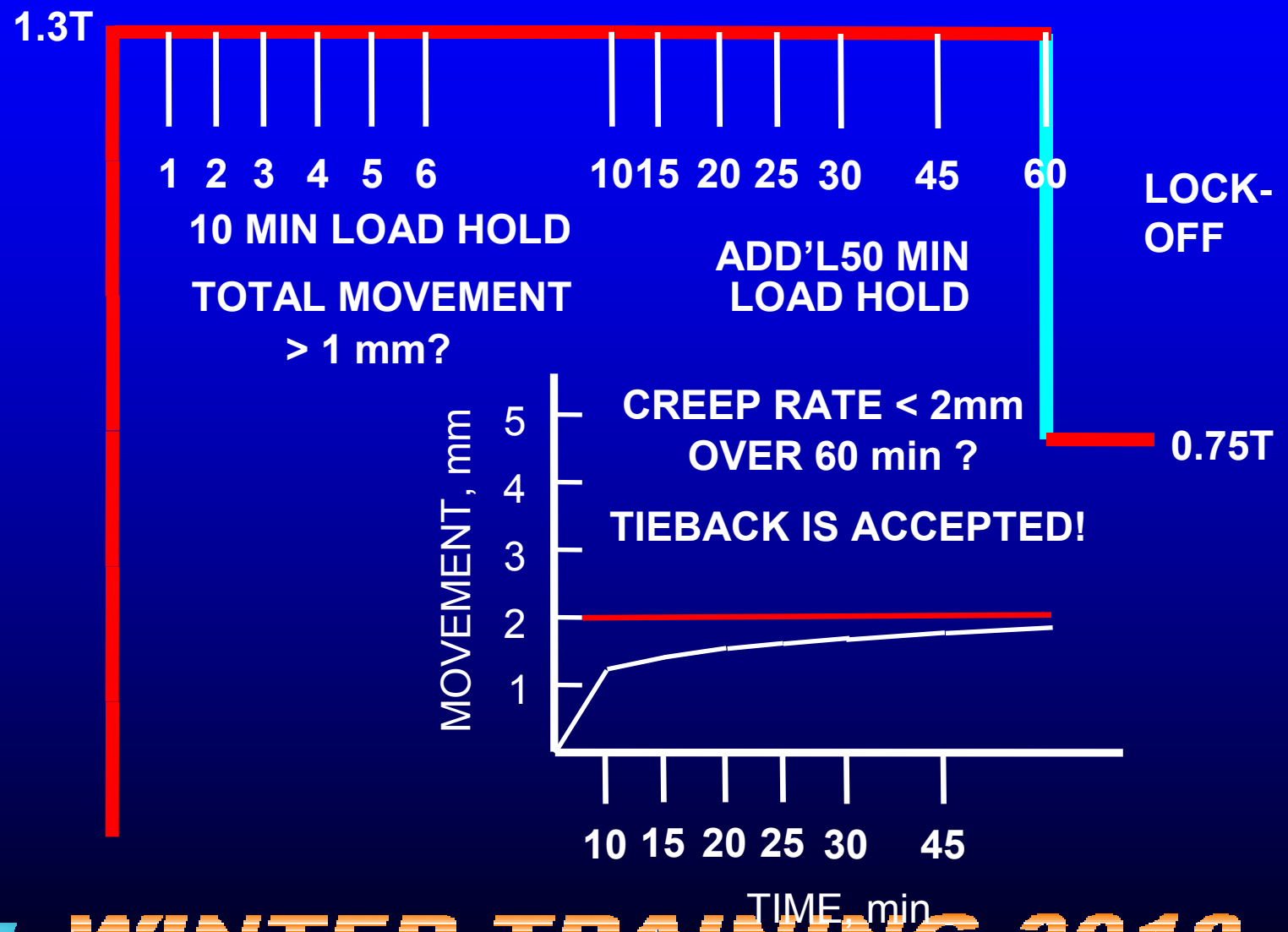
1.3T
1 2 3 4 5 6 10 15 20 25 30 45 60
10 MIN LOAD HOLD
TOTAL MOVEMENT
> 1 mm?
ADD'L 50 MIN
LOAD HOLD
LOCK-
OFF
CREEP RATE < 2mm
OVER 60 min ?
TIEBACK IS ACCEPTED!
0.75T
MOVEMENT, mm
5
4
3
2
1
10 15 20 25 30 45
TIME, min

PROOF TESTS

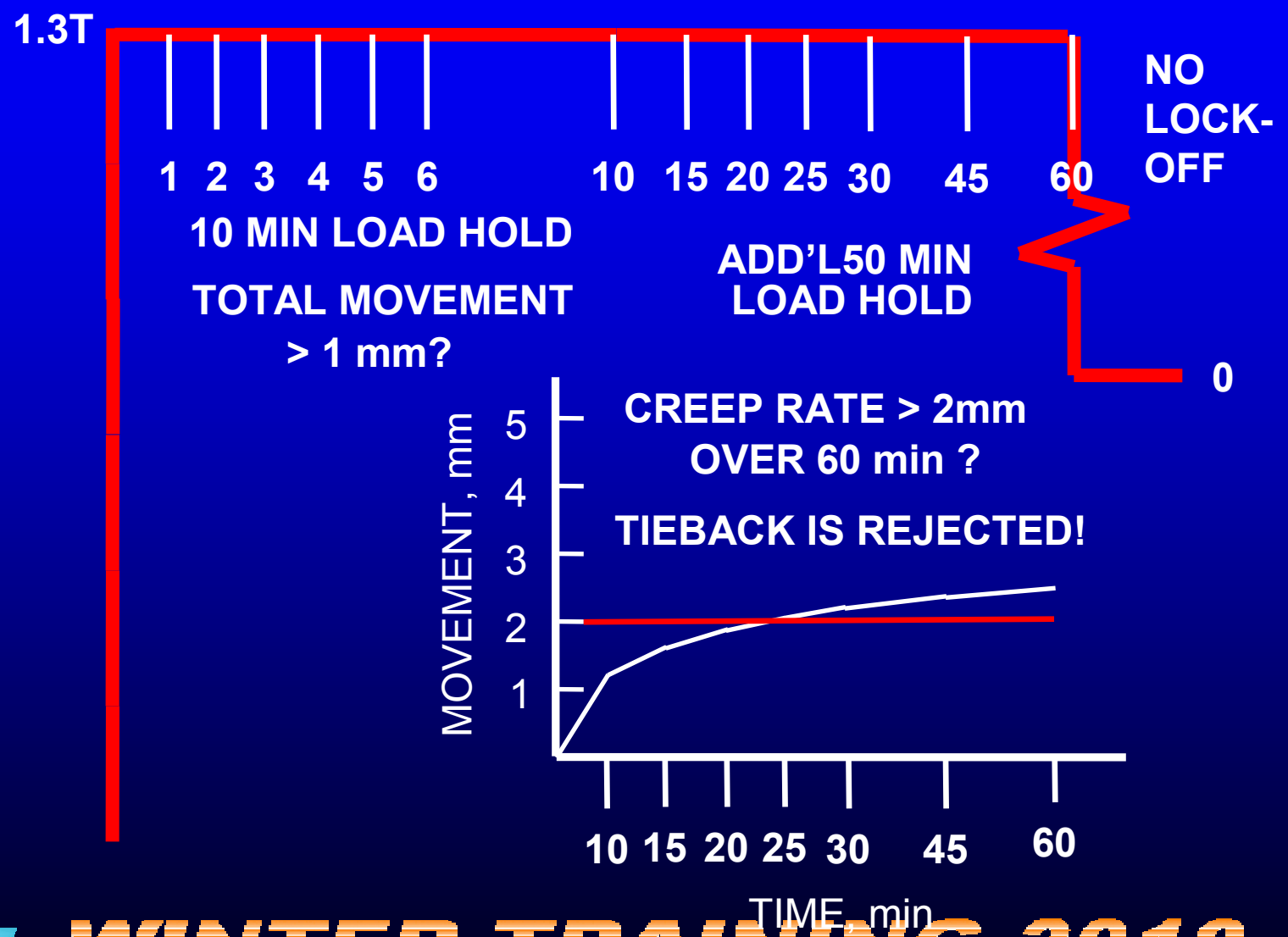
1.3T
1 2 3 4 5 6 10 15 20 25 30 45 60
NO LOCK-OFF
10 MIN LOAD HOLD
TOTAL MOVEMENT > 1 mm?
ADD'L50 MIN LOAD HOLD
0
CREEP RATE > 2mm OVER 60 min ?
TIEBACK IS REJECTED!
MOVEMENT, mm
5
4
3
2
1
10 15 20 25 30 45 60
TIME, min

Construction Considerations

- Testing Temporary Tiebacks
  - Contractor's Test Procedure
  - Proof Tests
  - **Performance Tests**

PERFORMANCE TESTS

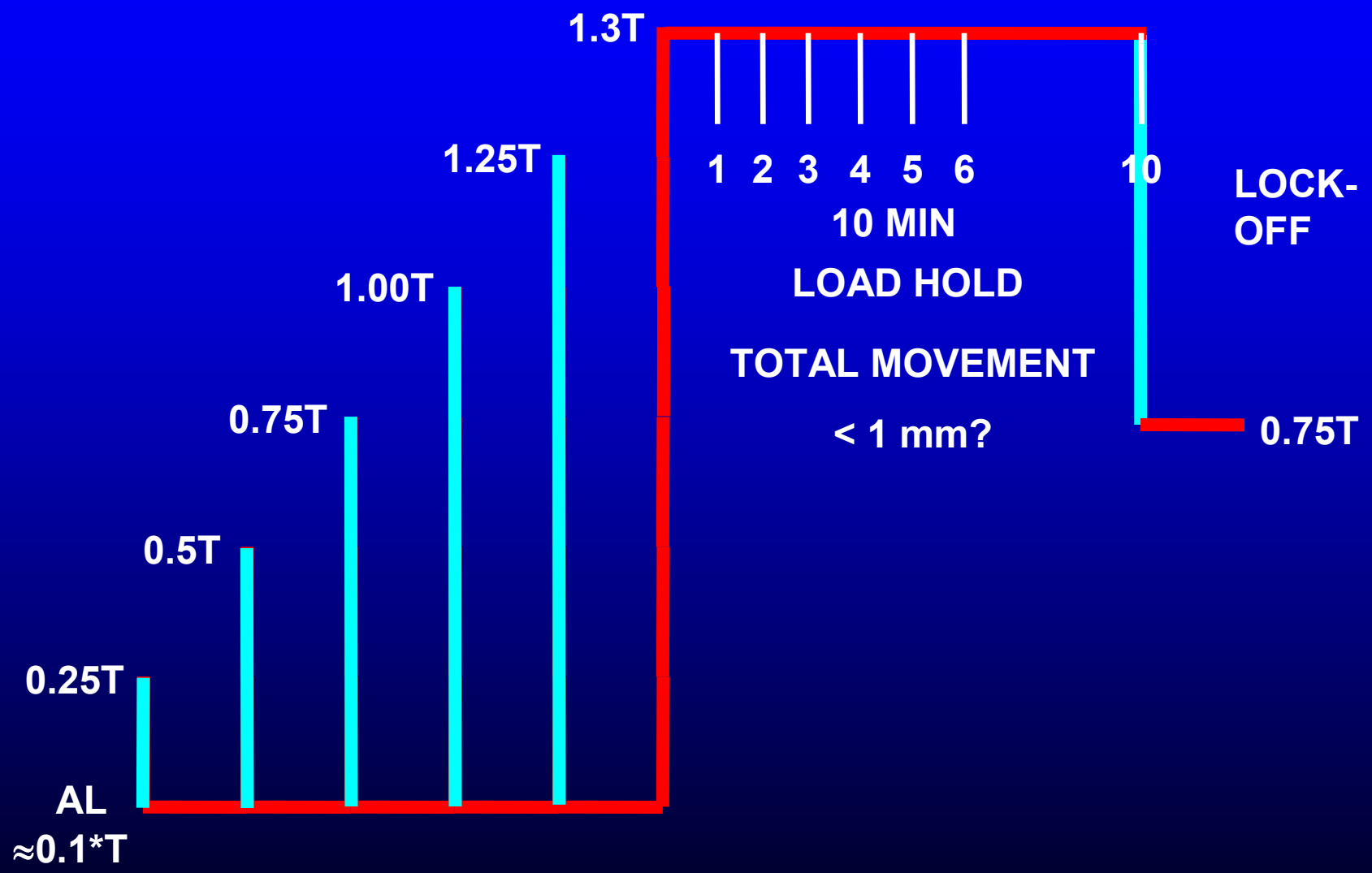

PERFORMANCE TESTS

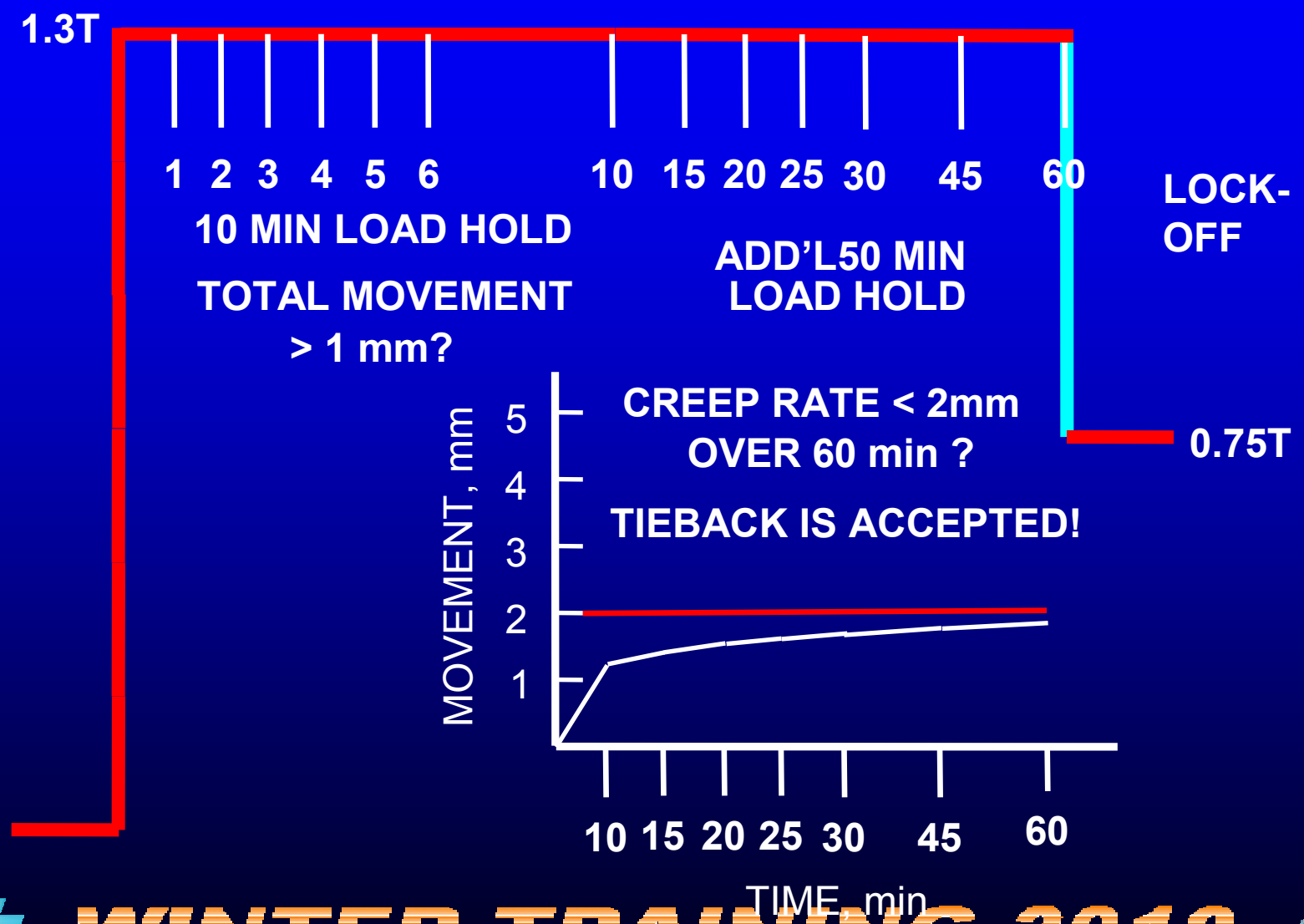

PERFORMANCE TESTS

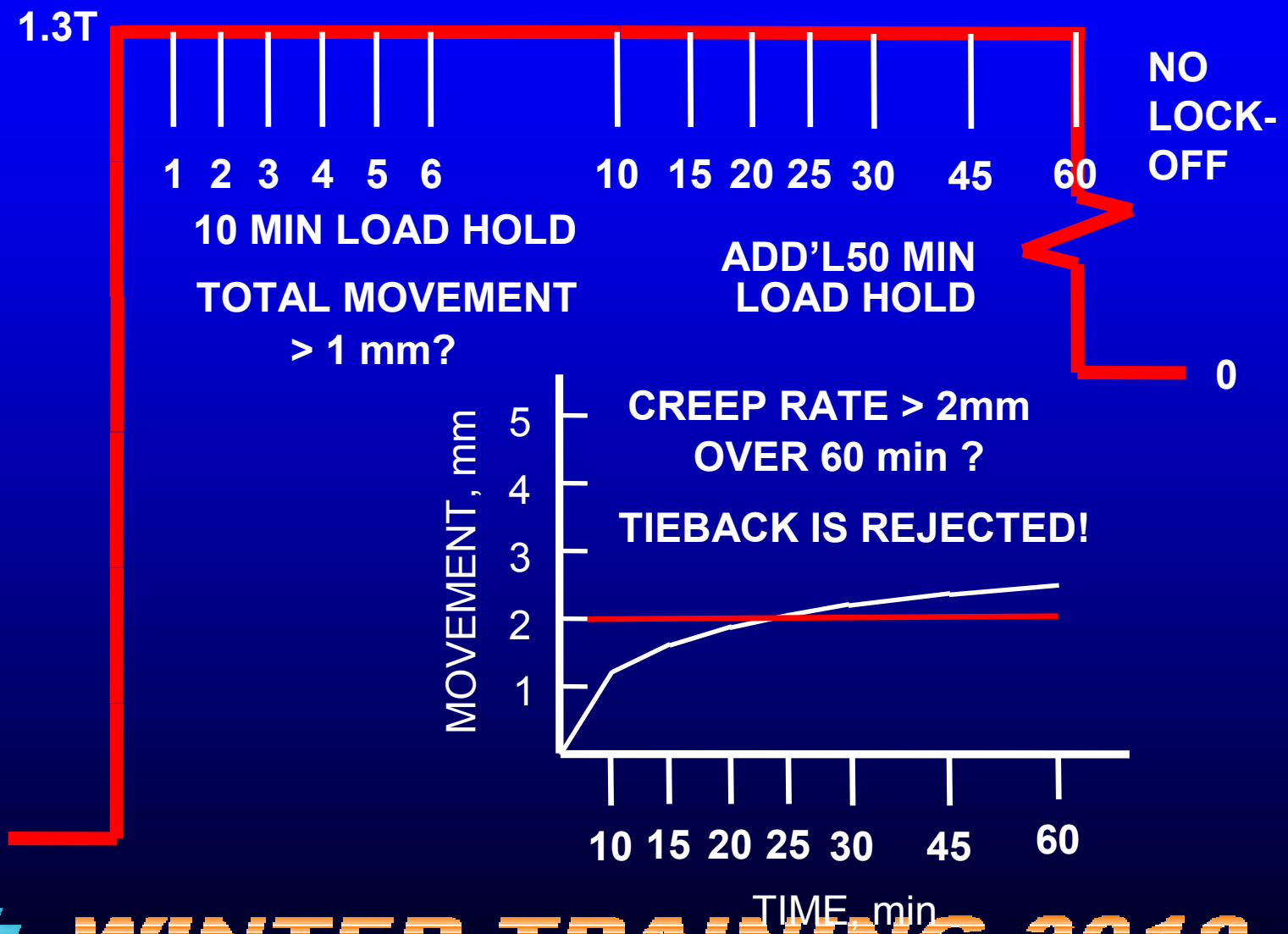

Performance Testing

- Generally a minimum of 3 tiebacks, but not less than 5% will be performance tested.
- Performance testing is not usually specified for temporary shoring.

Construction Considerations

- All tiebacks in a tier should be completed before continuing to the next tier of tiebacks
- Start over again for the second tier of tiebacks
- Or excavate to the dredge line for single tier tiebacks

Tieback References

- Standard Specifications
  - Section 5-1.02: Plans and working Drawings
  - Section 50: Prestressing Concrete
- Trenching and Shoring Manual
  - Chapter 4: Restrained Systems

Tieback References

- BCR&P Manual
  - BCM 145-10.0: Tieback Checklist
  - Chapter 160: Prestressed Concrete
- Foundation Manual
  - Chapter 11: Tiebacks, Tiedowns, & Soil Nails
- USS Sheet Pile Design Manual

Soil Nails

- What is a soil nail and how does it differ from a tieback?
- When should a soil nail be used?
- Components of a soil nail wall
- Review of a soil nail wall
- Construction Considerations

Soil Nails

- Soil nails use a reinforcing bar embedded in the soil mass as a restraint
- The bars are considered passive inclusions since they are not pre-tensioned

Soil Nails

- Well suited to soils with cohesive or apparent cohesive properties
- Urban / confined installations

- Not suited for running soils, creeping or expansive clays, areas with high groundwater

Components of a Soil Nail Wall

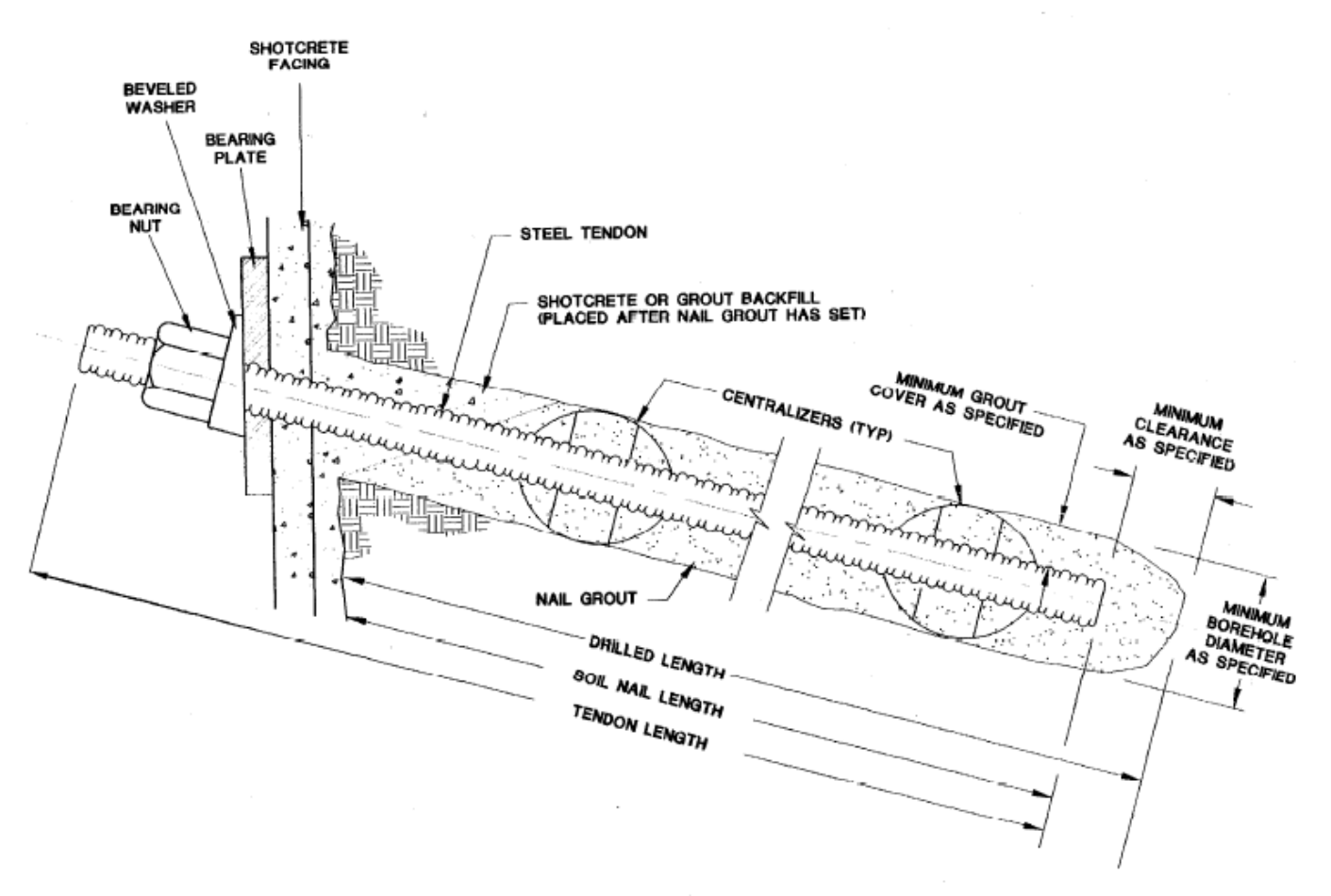

Review of a Temporary Soil Nail Wall

- Review by Geotechnical Design
- Stress distribution is different from a typical restrained system
  - More information is available in FHWA-SA-96-069R

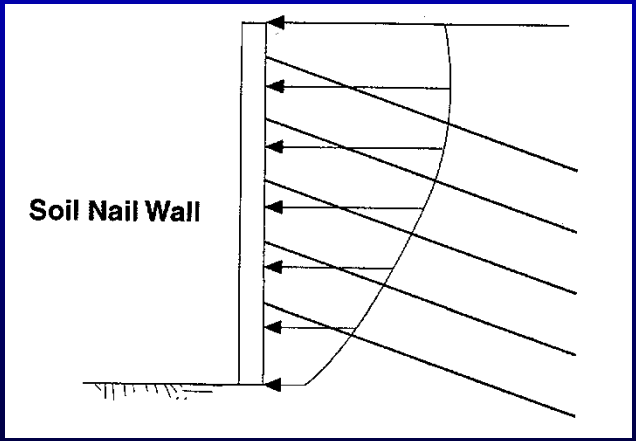

Review of a Temporary Soil Nail Wall

- Geometry of Wall
- Easements for Nails
- Soil Properties and Anticipated Ground Water
- Installation Sequence
- Corrosion Resistance
- Testing Procedure

Installation Sequence

- Excavation to level of soil nail
- Drill the nail hole
- Install and grout the nail
- Place drain strips (if required) and shotcrete facing
- Repeat to final grade

Corrosion Resistance

- Corrosion Resistance required will vary based on:
  - Length of time the wall will be in place
  - Corrosive potential of the soil

Soil Nail Testing

- Verification Tests
- Proof Testing
- Supplemental Testing
- Test Nails are Sacrificial

Construction Considerations

- Check materials when they arrive on site
  - Length and diameter of nails
  - Bearing plates and nuts
  - Geocomposite drainage material
  - Storage of materials to prevent damage and corrosion

Construction Considerations

- Excavation to proper line and grade
  - Do not over-excavate
  - Pay attention to sloughing and movement
- Check holes
  - Diameter
  - Angle
  - Depth
- Log grout volume

Construction Considerations

- Drainage
  - Check overlap details
- Shotcrete
  - Cold joint prep
  - Mix Design
  - Time of closure
  - Bearing plate and nut installation

Soil Nail References

- BCR&P Manual
- Foundation Manual
- FHWA Manual for Design and Construction Monitoring of Soil Nail Walls
- FHWA Soil Nailing Field Inspectors Manual

What We've Covered

- What a tieback wall is and why we use them
- Components of a tieback wall
- How tieback walls are reviewed and inspected
- What is a soil nail and how it differs from a tieback
- When soil nails are used
- Components of a soil nail wall
- Soil nail wall review and inspection
- Construction Considerations

Questions?

WINTER TRAINING 2010

RAILROADS

Tony English, PE

(530) 713-7869

WINTER TRAINING 2010

Shoring Adjacent to Railroads

- Review Times
- Guidelines for Temporary Shoring
- Review Process

Review Times

- Designated by paragraph 4 of Standard Specifications Section 19-1.02
  - At least 9 weeks prior to construction
- Send submittals to the Railroad ASAP
  - RR requires a minimum of 4 weeks to review
- NO Work on the shoring UNTIL it is approved by the railroad in writing

Guidelines for Temporary Shoring

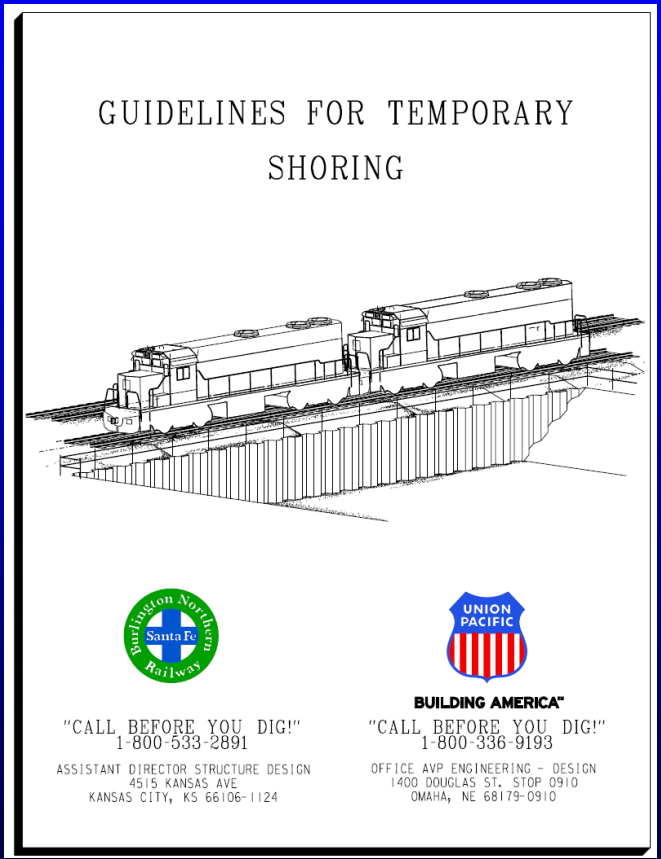

GUIDELINES FOR TEMPORARY SHORING

"CALL BEFORE YOU DIG!"
1-800-533-2891

ASSISTANT DIRECTOR STRUCTURE DESIGN
4515 KANSAS AVE
KANSAS CITY, KS 66106-1124

BUILDING AMERICA™

"CALL BEFORE YOU DIG!"
1-800-336-9193

OFFICE AVP ENGINEERING - DESIGN
1400 DOUGLAS ST. STOP 0910
OMAHA, NE 68179-0910

Guidelines for Temporary Shoring

- General Criteria
- Contractor Responsibilities
- Information Required
- Types of Shoring
- General Shoring Requirements
- Loading
- Structural Analysis
- Plan Requirements

Guidelines for Temporary Shoring

- **General Criteria**
- Contractor Responsibilities
- Information Required
- Types of Shoring
- General Shoring Requirements
- Loading
- Structural Analysis
- Plan Requirements

General Criteria

- Emergency Railroad numbers must be posted on site
- Flagman is required when work is within 25 feet of tracks
- No work within 50 feet and no equipment or personnel within 25 feet when a train is passing

Guidelines for Temporary Shoring

- General Criteria
- **Contractor Responsibilities**
- Information Required
- Types of Shoring
- General Shoring Requirements
- Loading
- Structural Analysis
- Plan Requirements

Contractor Responsibilities

- Work shall not impede train operations
- Work plan must allow tracks to be open at all time
- Protect ballast from contamination
- Monitor rail elevation and alignment
- Damage must be reported immediately

Guidelines for Temporary Shoring

- General Criteria
- Contractor Responsibilities
- **Information Required**
- Types of Shoring
- General Shoring Requirements
- Loading
- Structural Analysis
- Plan Requirements

Information Required

- Plans and calculations must be signed and stamped by a California P.E.
- English units are required. Dual units are acceptable

Information Required

- Field Survey
- Geotechnical Report
- Loads
- Drainage
- Structural Design Calculations

Guidelines for Temporary Shoring

- General Criteria
- Contractor Responsibilities
- Information Required
- **Types of Shoring**
- General Shoring Requirements
- Loading
- Structural Analysis
- Plan Requirements

Types of Shoring

- Shoring Boxes
  - Allowed only in special cases
  - Usually outside of RR surcharge zones

Types of Shoring

- Cantilevered shoring
  - Sheet piles

    only allowed in granular or stiff clay soils
  - Soldier piles with lagging

Types of Shoring

- Anchored systems (restrained systems)
  - Sheet pile wall
  - Soldier piles with lagging

Tiebacks are discouraged due to removal requirements and potential damage to underground facilities

Types of Shoring

- Braced Excavations
- Cofferdams

Guidelines for Temporary Shoring

- General Criteria
- Contractor Responsibilities
- Information Required
- Types of Shoring
- **General Shoring Requirements**
- Loading
- Structural Analysis
- Plan Requirements

General Shoring Requirements

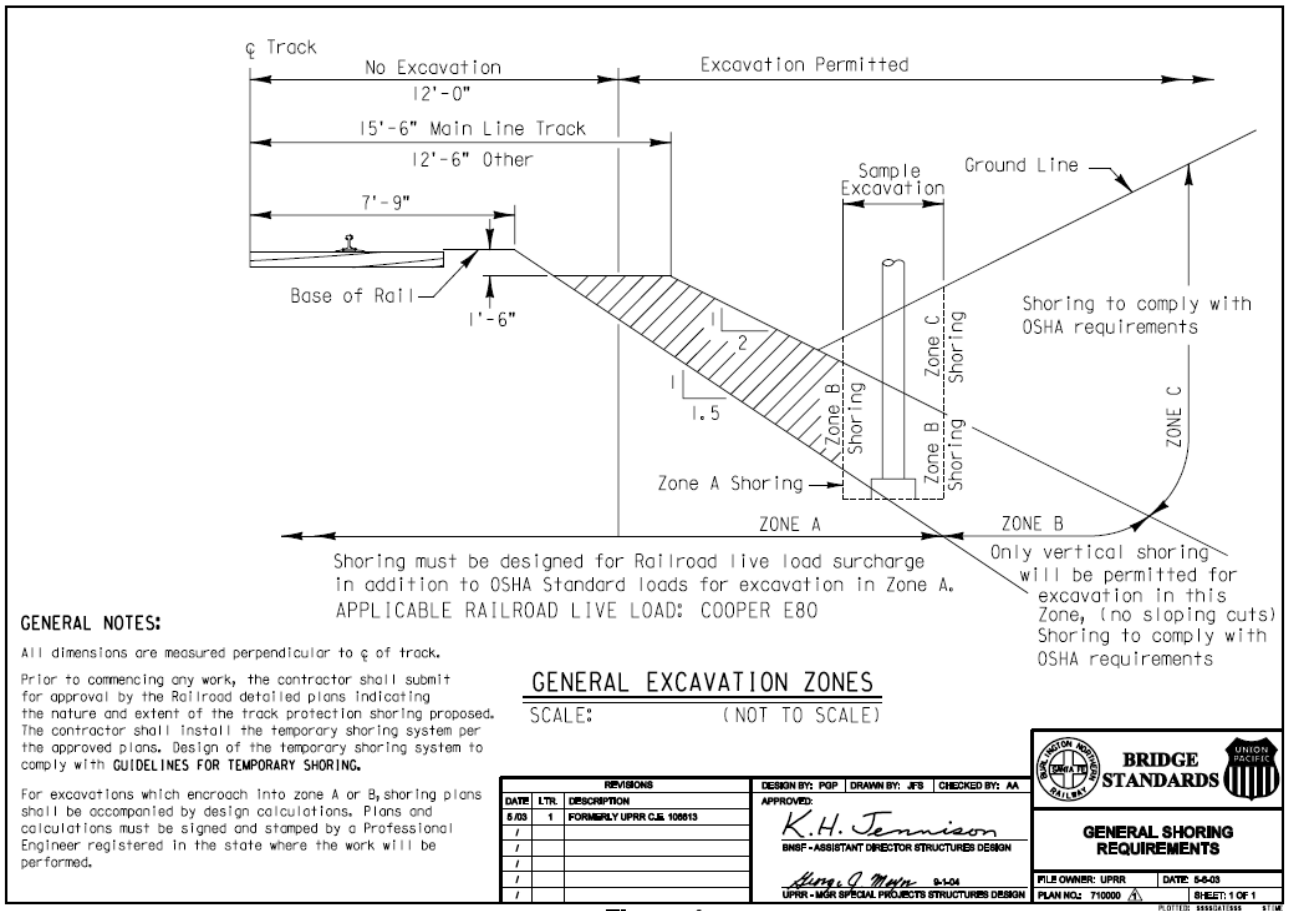

Figure 1

Shoring Requirements

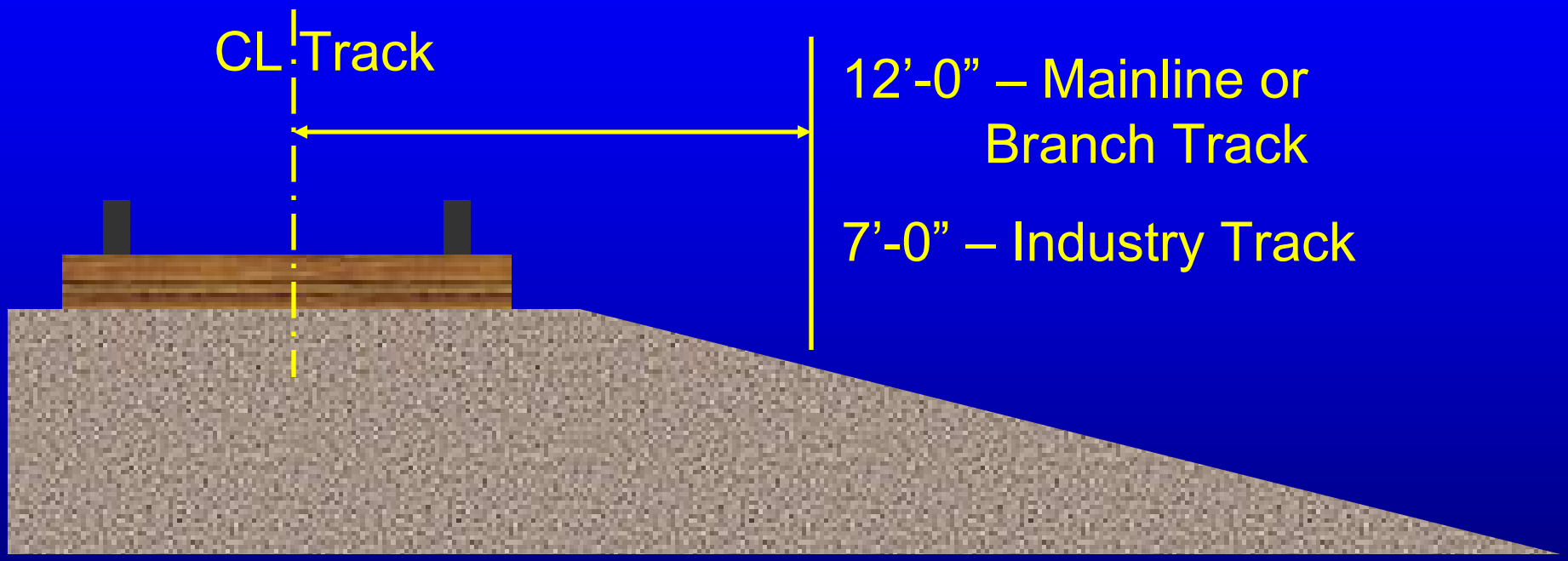

<12’ – 0”: No excavation is allowed

Zone A

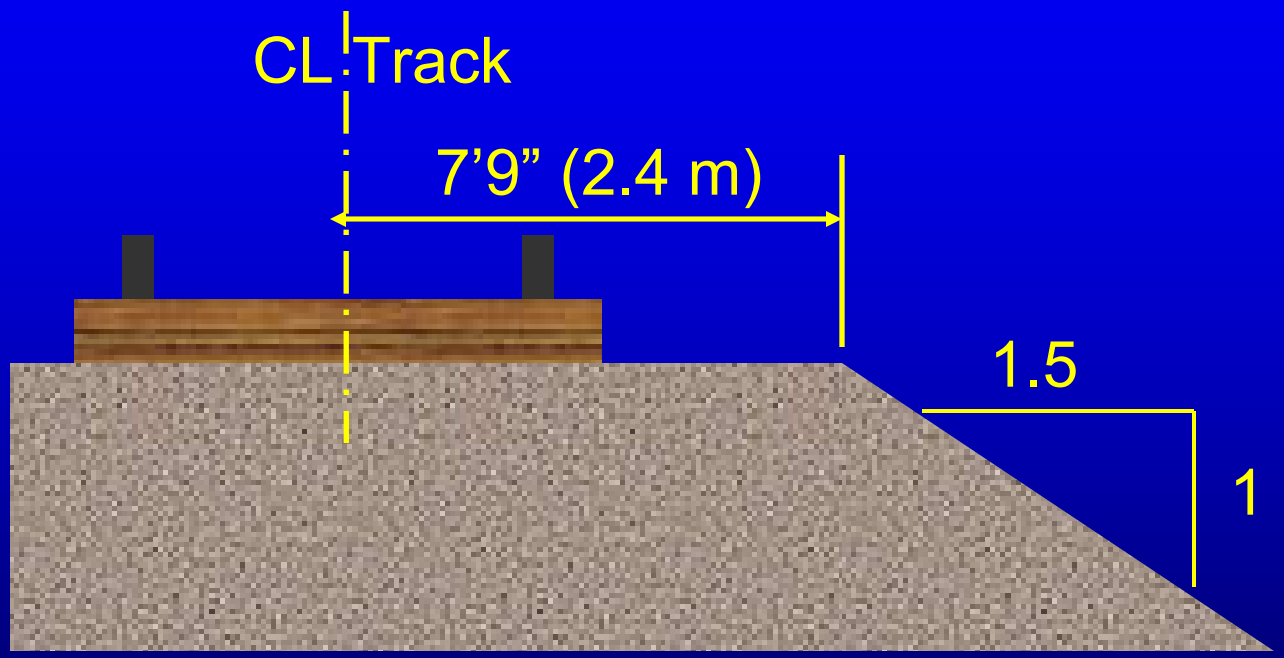

Within Zone A: No shoring that disturbs or allows loss of soil

Zone B

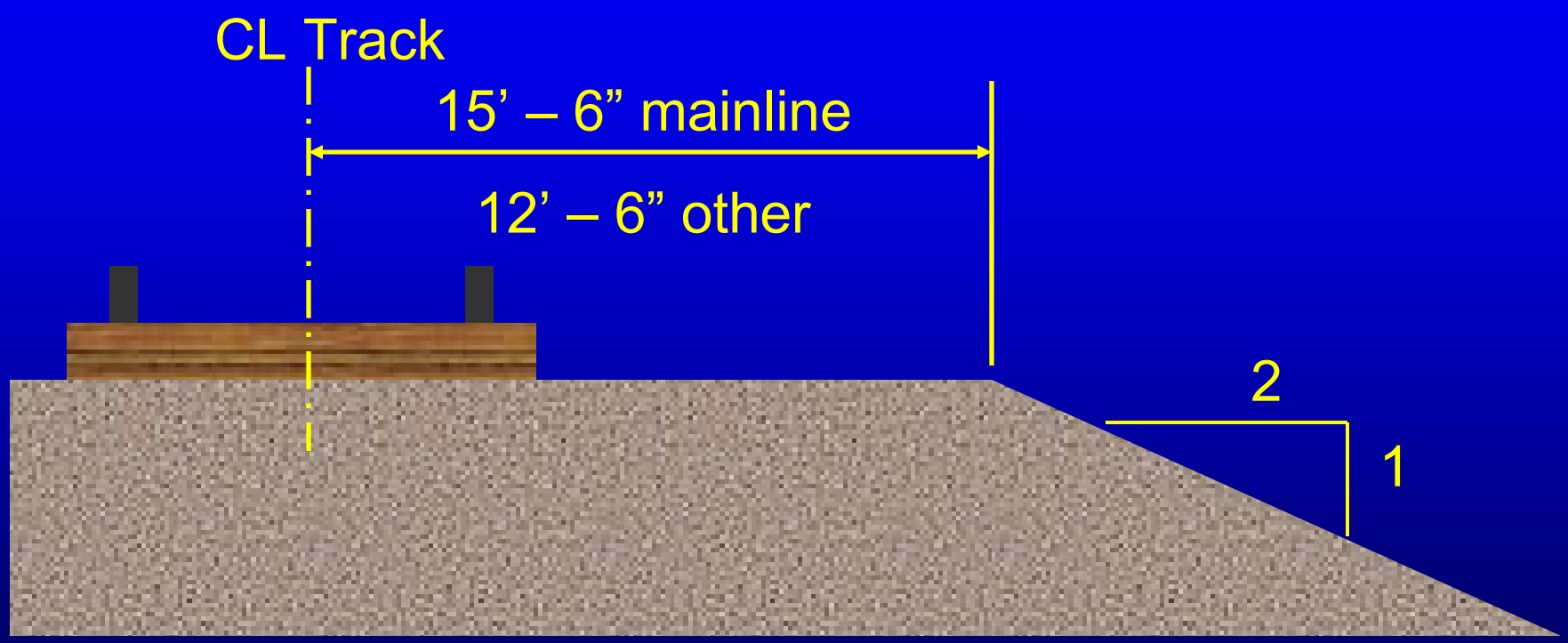

Within Zone B – No sloping cuts

Zone C

- Outside of Zones A and B must comply with OSHA standards

Shoring Requirements

- Shoring design must account for drainage
- All excavations on RR property are to be protected
- No secondhand material unless an inspection report is submitted
  - Must be signed and stamped by P.E.
- All components are to be removed when work is complete
- No slurry backfill for soldier piles

Guidelines for Temporary Shoring

- General Criteria
- Contractor Responsibilities
- Information Required
- Types of Shoring
- General Shoring Requirements
- **Loading**
- Structural Analysis
- Plan Requirements

Loading

- Railroad Live Load
- Dead Loads
- Earth Pressures
- Centrifugal Forces
- Other Live Loads

Railroad Live Loads

- Boussinesq surcharge due to Cooper E80 live load
  - Developed by Theodore Cooper in 1894 as the E10 loading

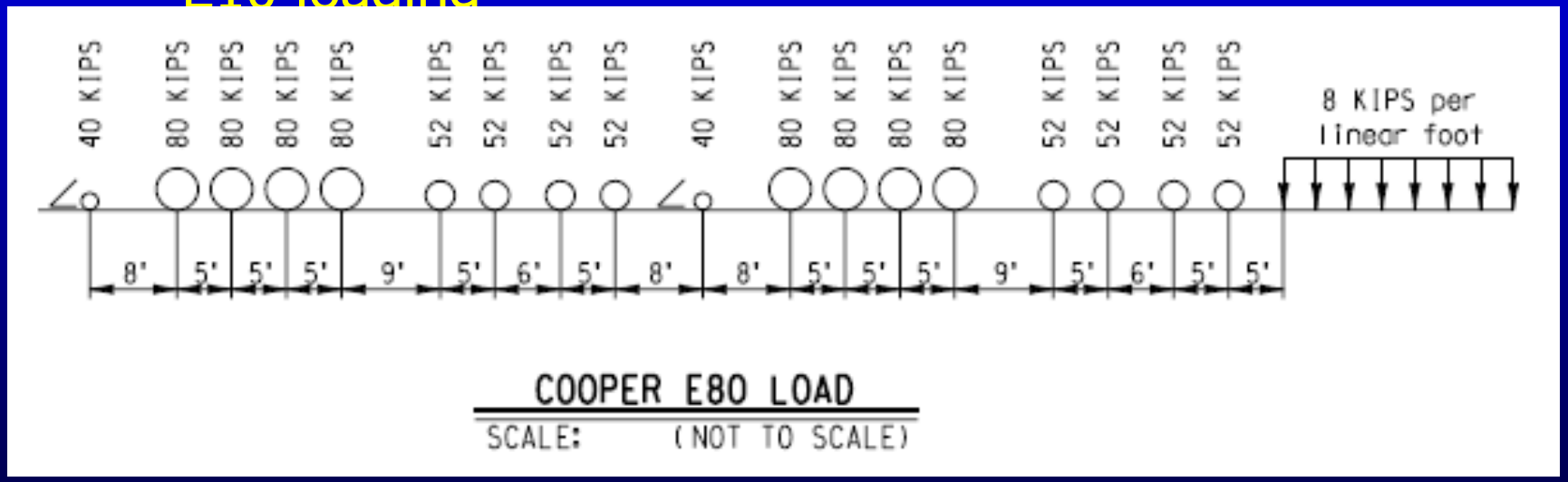

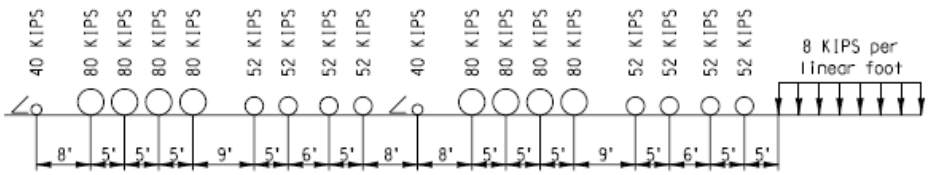

COOPER E80 LOAD

SCALE: (NOT TO SCALE)

Vertical pressure q shall be based on a distribution width Ld.
Ld is the length of tie plus H_1.
H_1 is the height from the bottom of tie to the top of shoring.
H_2 is the depth of point being evaluated with the Boussinesq equation.
S is a distance perpendicular from centerline of track to the face of shoring.
D is from top of shoring to one foot below dredge line.
Zp is the minimum embedment depth.
Length of tie is 9 feet
q is the intensity of strip load due to E80 Railroad live load and shall be calculated as follows:

For $H_1 = 0$ Ld = length of tie; therefore, $q = \frac{80{,}000 \text{ lb}}{(5 \text{ feet})(9 \text{ feet})} = 1{,}778$ psf

For $H_1 > 0$ Ld = length of tie + H_1; therefore, $q = \frac{80{,}000 \text{ lb}}{(5 \text{ feet})(Ld)}$

CASE 1: Lateral live load pressure Ps, due to E80 loading for track **parallel** to shoring system is calculated using the Boussinesq Strip Load Equation.

$$Ps = \frac{2q}{\pi}(\beta + \sin\beta \sin^2\alpha - \sin\beta \cos^2\alpha)$$

The above equation can be simplified into the following equivalent form:

$$Ps = \frac{2q}{\pi}[\beta - \sin\beta \cos(2\alpha)]$$

α and β are angles measured in radians, $\alpha = \theta + \frac{\beta}{2}$

CASE 2: Live load pressure due to E80 loading for track at a **right angle** to the shoring system can be calcuated using the following equation.

$$Ps = K_A q$$

where $K_A = \tan^2(45 - \frac{\phi}{2})$

ϕ is the angle of internal friction in degrees

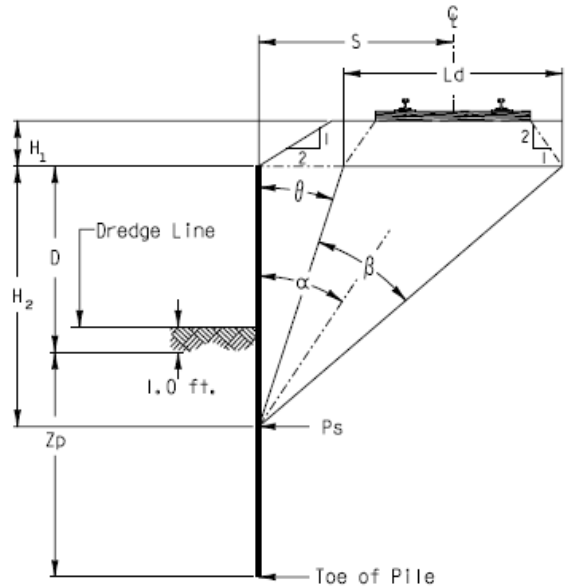

PLAN

SCALE: (NOT TO SCALE)

REVISIONS		
DATE	LTR.	DESCRIPTION
/		
/		
/		
/		
/		
/		

DESIGN BY: PGP | DRAWN BY: JFS | CHECKED BY: AA

APPROVED:

K.H. Jennison

BNSF - ASSISTANT DIRECTOR STRUCTURES DESIGN

George J. Mayer 9-1-04

UPRR - MGR SPECIAL PROJECTS STRUCTURES DESIGN

BURLINGTON NORTHERN SANTA FE RAILWAY

BRIDGE SHORING STANDARDS

UNION PACIFIC

LIVE LOAD PRESSURE DUE TO COOPER E80

FILE OWNER: UPRR | DATE:

PLAN NO.: 710001 | SHEET: 1 OF 1

PLOTTED: SSSSDATESSS STIME

Figure 2

Cooper E80 Example

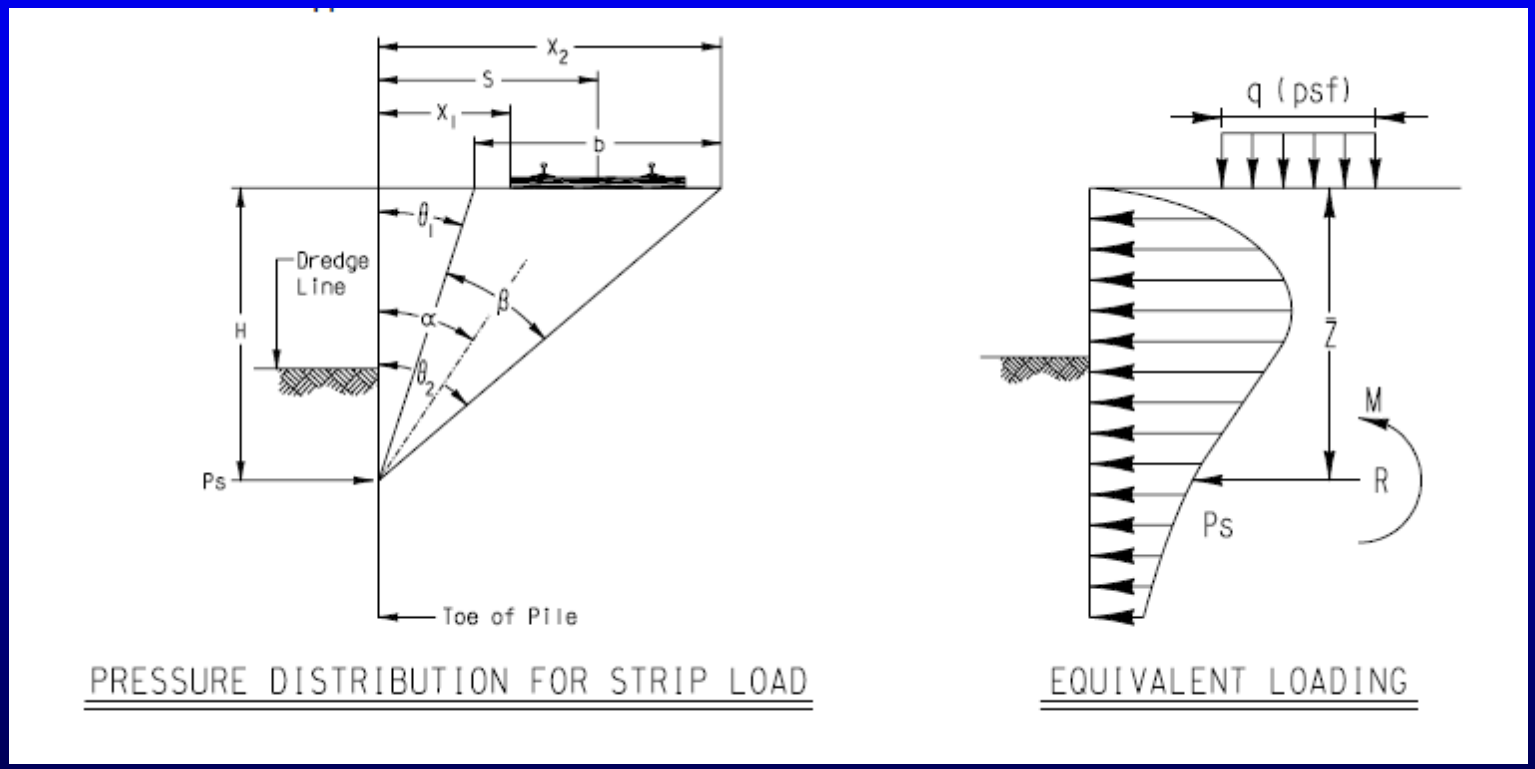

Cooper E80 Example

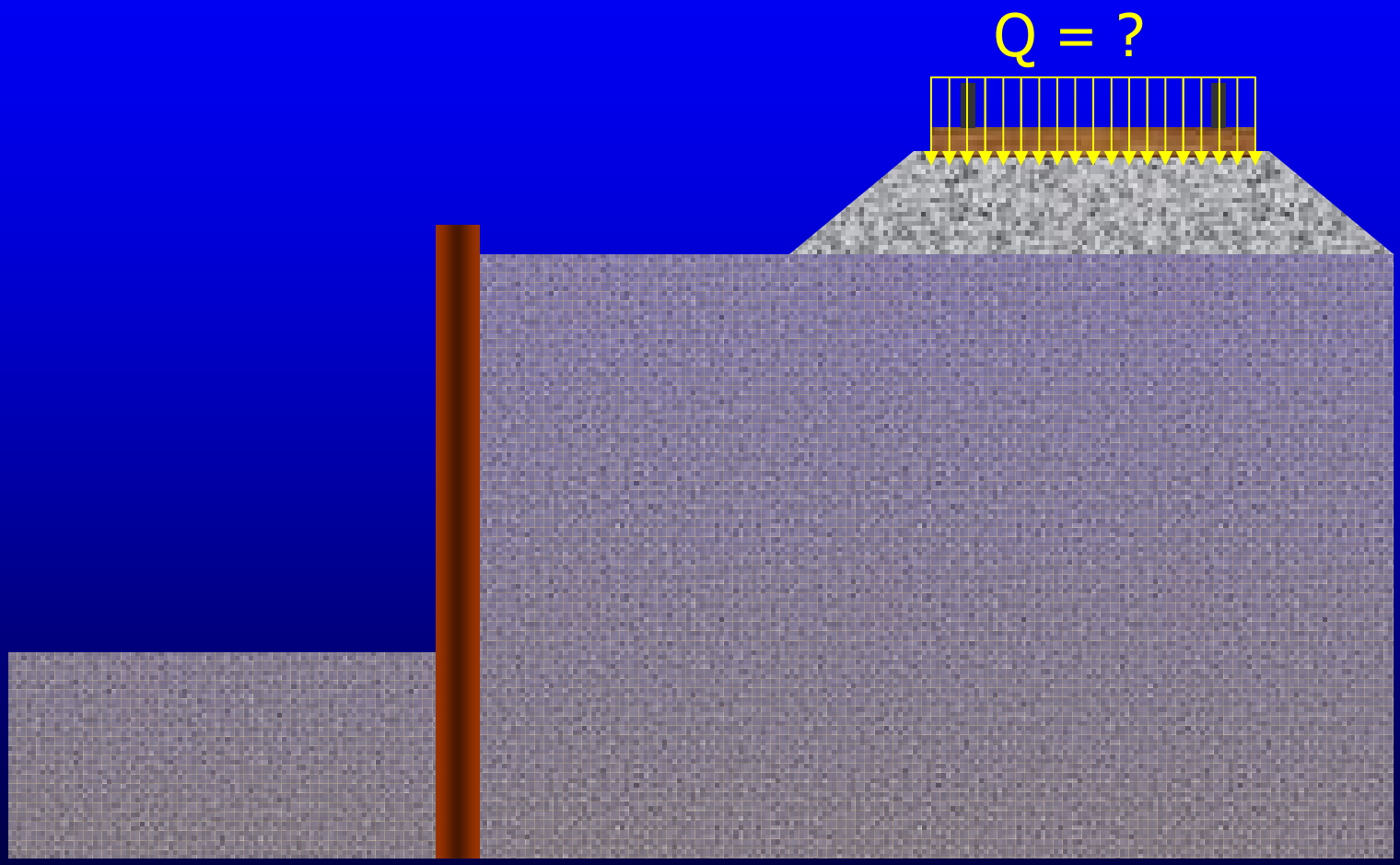

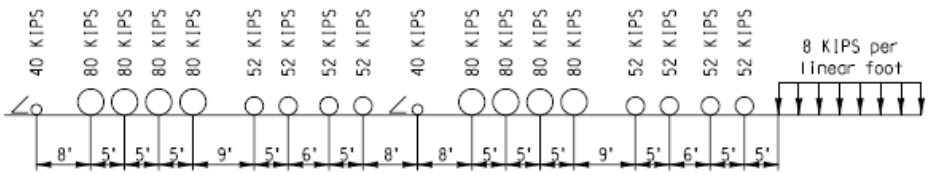

COOPER E80 LOAD

SCALE: (NOT TO SCALE)

Vertical pressure q shall be based on a distribution width Ld.
Ld is the length of tie plus H_1.
H_1 is the height from the bottom of tie to the top of shoring.
H_2 is the depth of point being evaluated with the Boussinesq equation.
S is a distance perpendicular from centerline of track to the face of shoring.
D is from top of shoring to one foot below dredge line.
Zp is the minimum embedment depth.
Length of tie is 9 feet
q is the intensity of strip load due to E80 Railroad live load and shall be calculated as follows:

For $H_1 = 0$ Ld = length of tie; therefore, $q = \frac{80{,}000 \text{ lb}}{(5 \text{ feet})(9 \text{ feet})} = 1{,}778$ psf

For $H_1 > 0$ Ld = length of tie + H_1; therefore, $q = \frac{80{,}000 \text{ lb}}{(5 \text{ feet})(Ld)}$

CASE 1: Lateral live load pressure Ps, due to E80 loading for track **parallel** to shoring system is calculated using the Boussinesq Strip Load Equation.

$$Ps = \frac{2q}{\pi}(\beta + \sin\beta \sin^2\alpha - \sin\beta \cos^2\alpha)$$

The above equation can be simplified into the following equivalent form:

$$Ps = \frac{2q}{\pi}[\beta - \sin\beta \cos(2\alpha)]$$

α and β are angles measured in radians, $\alpha = \theta + \frac{\beta}{2}$

CASE 2: Live load pressure due to E80 loading for track at a **right angle** to the shoring system can be calcuated using the following equation.

$$Ps = K_A q$$

where $K_A = \tan^2(45 - \frac{\phi}{2})$

ϕ is the angle of internal friction in degrees

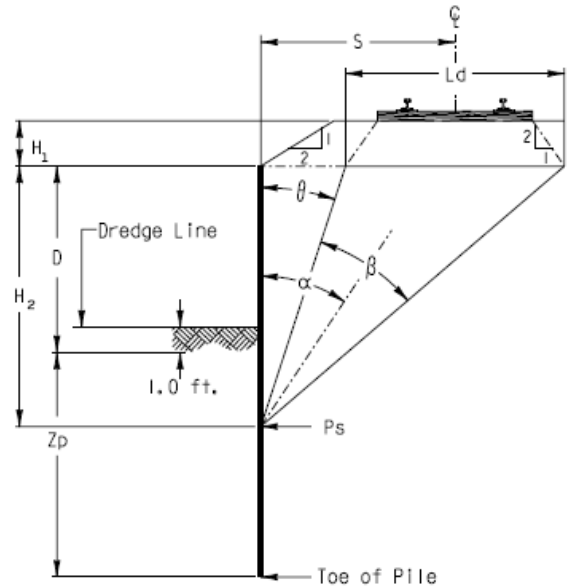

PLAN

SCALE: (NOT TO SCALE)

REVISIONS		
DATE	LTR.	DESCRIPTION
/		
/		
/		
/		
/		
/		

DESIGN BY: PGP | DRAWN BY: JFS | CHECKED BY: AA

APPROVED:

K.H. Jennison
BNSF - ASSISTANT DIRECTOR STRUCTURES DESIGN

George J. Mayer 9-1-04
UPRR - MGR SPECIAL PROJECTS STRUCTURES DESIGN

BURLINGTON NORTHERN SANTA FE RAILWAY

BRIDGE SHORING STANDARDS

UNION PACIFIC

LIVE LOAD PRESSURE DUE TO COOPER E80

FILE OWNER: UPRR | DATE:
PLAN NO.: 710001 | SHEET: 1 OF 1

PLOTTED: SSSSDATESSS STIME

Figure 2

Cooper E80 Example

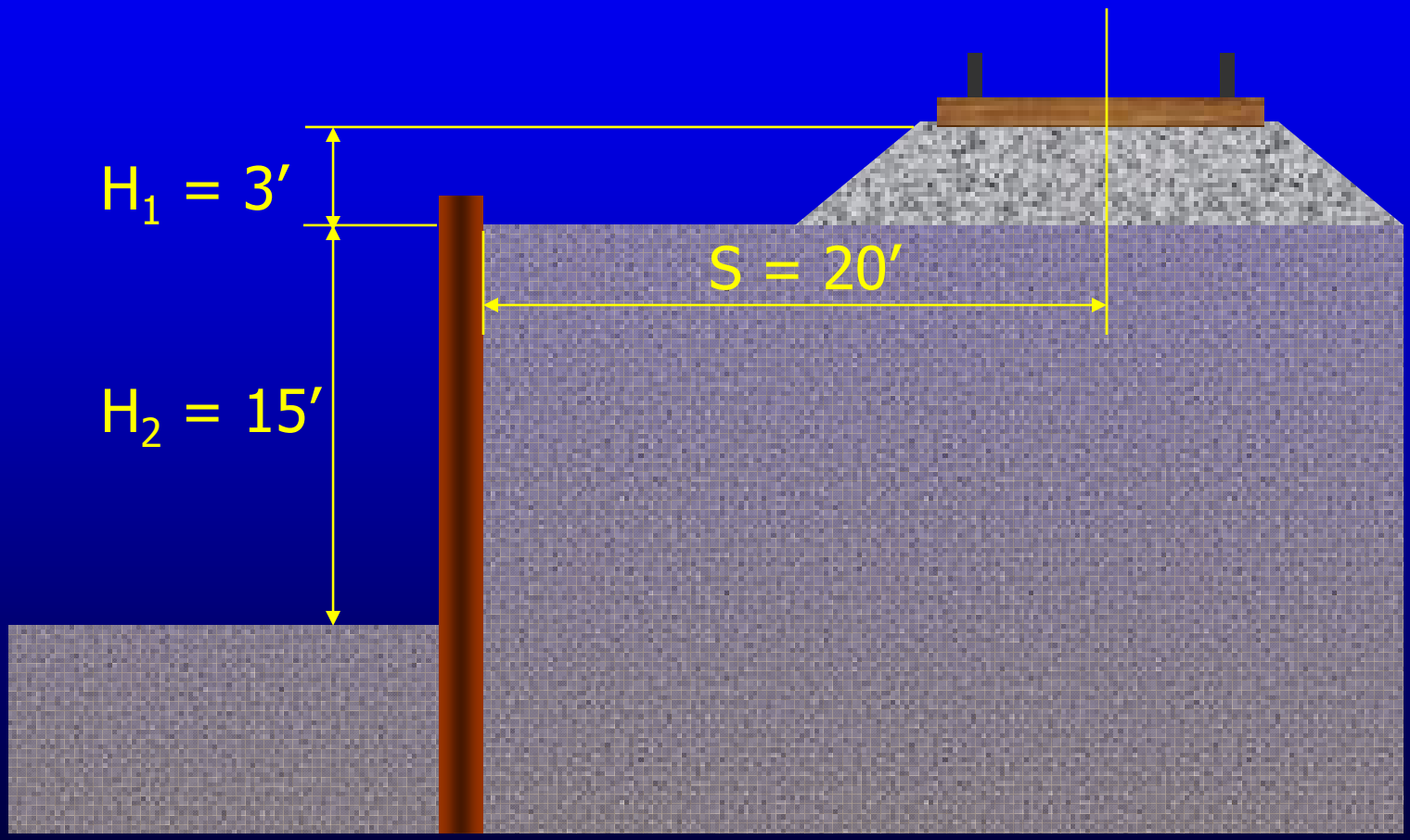

Cooper E80 Example

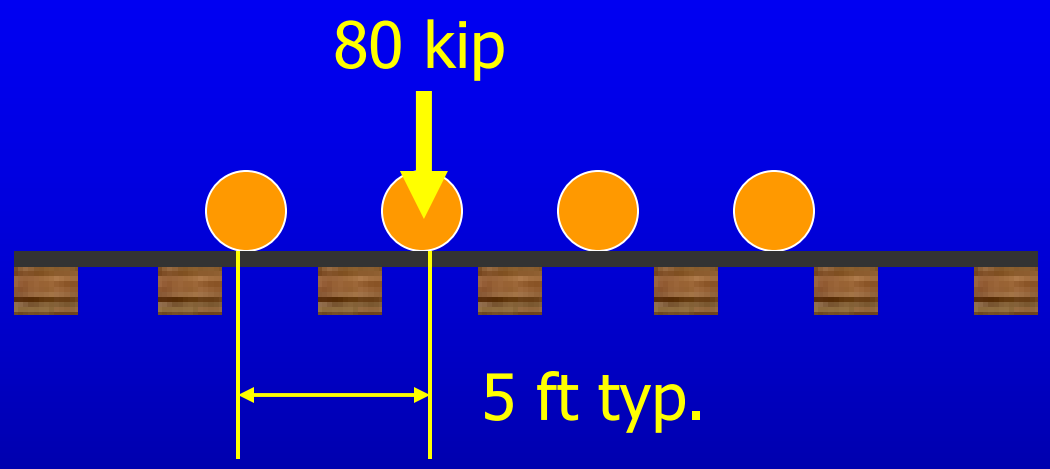

$$Q = \frac{80{,}000\text{lbs}}{(5\text{ft})(9\text{ft} + 3\text{ft})} = 1333\text{psf}$$

Cooper E80 Example

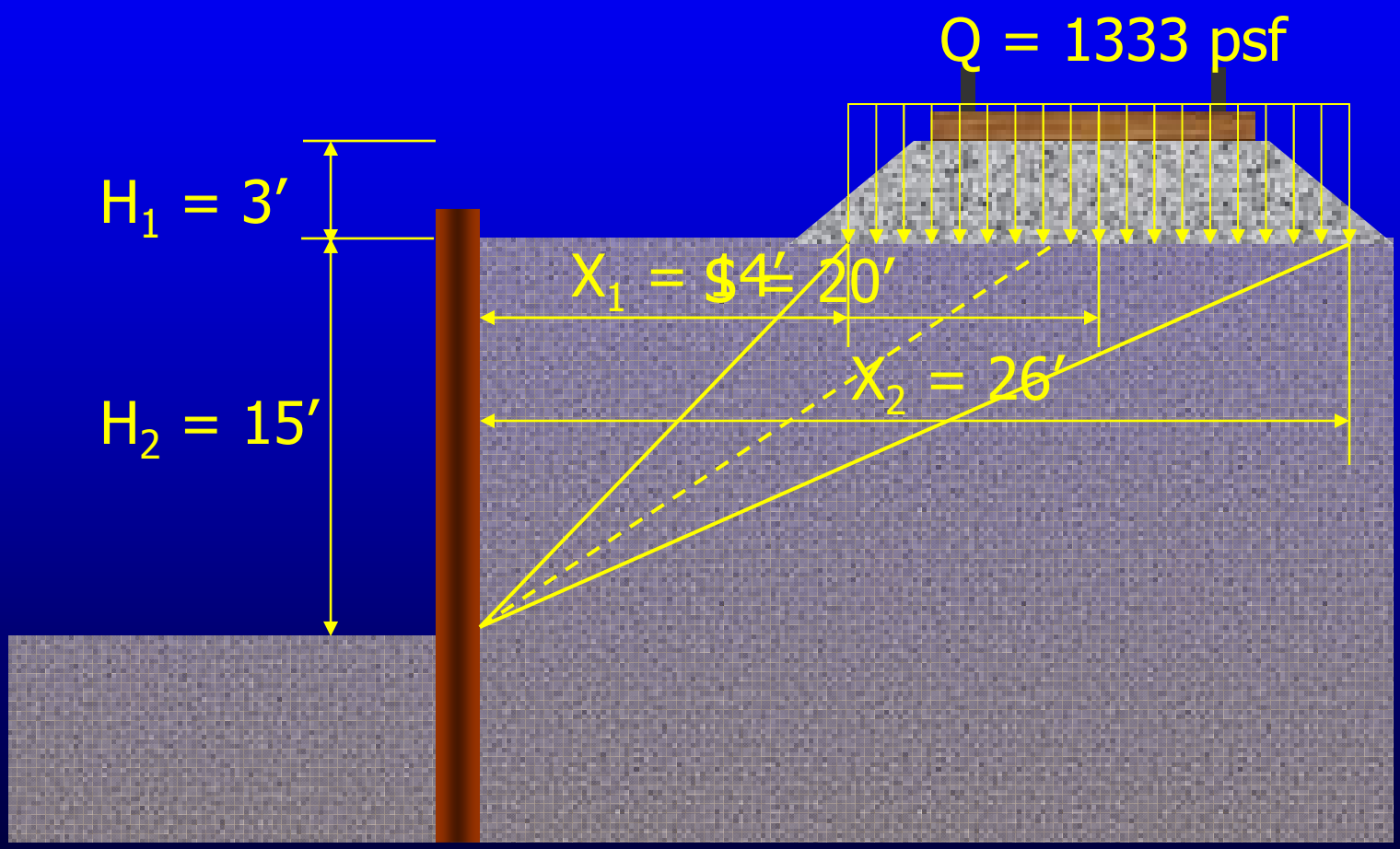

Cooper E80 Example

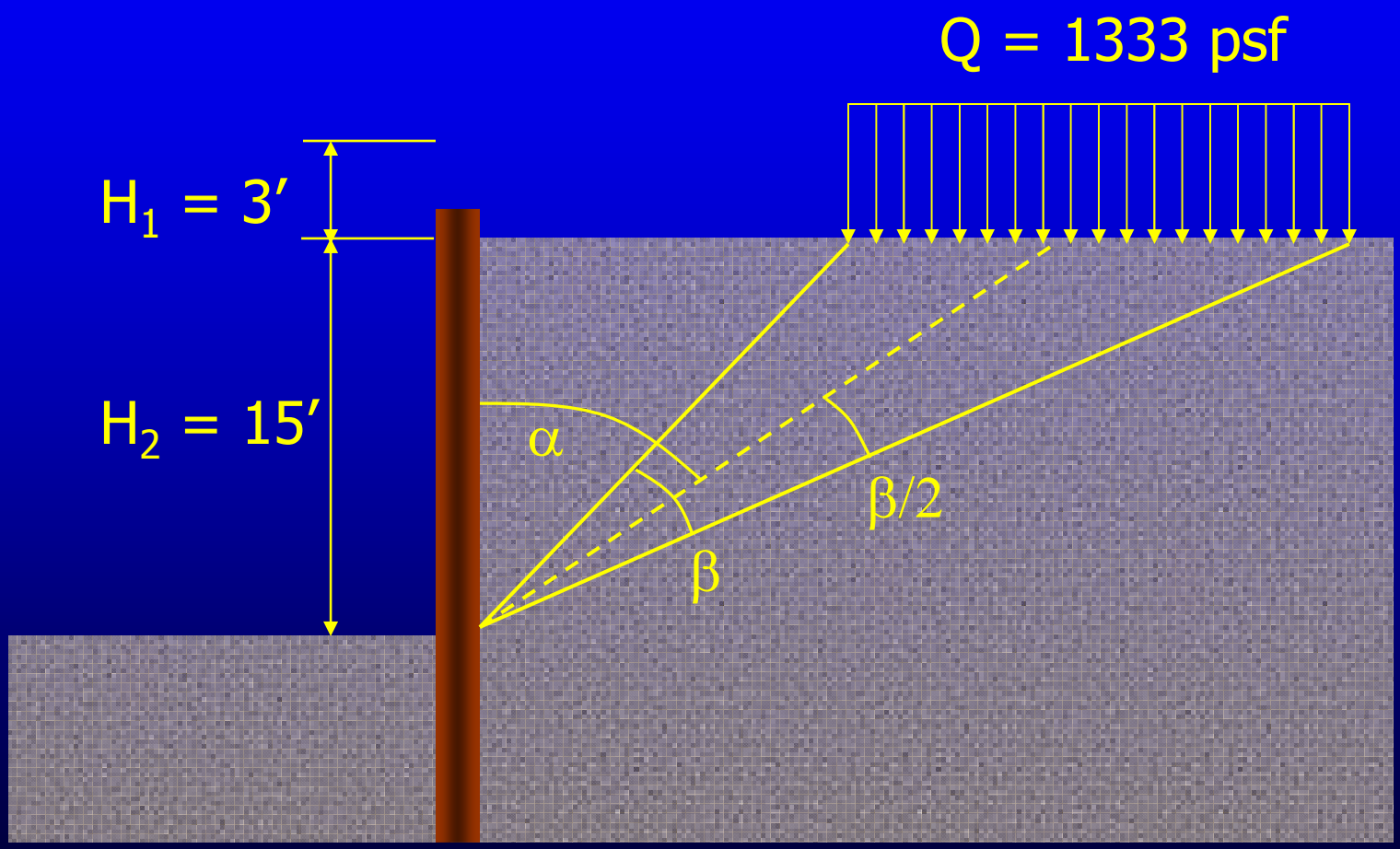

Cooper E80 Example

$$\beta = \text{atan}\left(\frac{X_2}{H_2}\right) - \text{atan}\left(\frac{X_1}{H_2}\right) = \text{atan}\left(\frac{26}{15}\right) - \text{atan}\left(\frac{14}{15}\right) = 17^{\circ}$$

$$\beta/2 = 8.5$$

$$\alpha = \text{atan}\left(\frac{X_2}{H_2}\right) - \frac{\beta}{2} = 51.5^{\circ}$$

Cooper E80 Example

$$\sigma_h = \frac{2Q\left[\beta_R - \sin\beta\cos(2\alpha)\right]}{\pi}$$

$$\sigma_h = \frac{2(1333)\left[0.297 - \sin(17)\cos(2(51.5))\right]}{\pi}$$

$$\sigma_h = 308\text{plf}$$

Dead Loads

- Spoil Piles
  - Assumed 2′ minimum (72 psf)
- Track
  - 200 plf
- Roadbed
  - Ballast, incl. track ties, assume 120 pcf

Earth Pressures

- Active and Passive Pressures
  - Active by Coulomb or other approved method
  - Account for unbalanced water pressure
  - Embankment surcharges (log spiral, etc)

Centrifugal Force

- Tracks on a curve greater than 3 degrees require centrifugal force calculations
  - See AREMA Chapter 15, Part 1, Section 1.3, Article 1.3.6

Other Live Loads

- Other live load surcharges such as vehicles and equipment must be included.

Guidelines for Temporary Shoring

- General Criteria
- Contractor Responsibilities
- Information Required
- Types of Shoring
- General Shoring Requirements
- Loading
- **Structural Analysis**
- Plan Requirements

Allowable Stresses and Safety Factors

- Embedment Depth
- Allowable Stresses
- Testing
- Deflections

Embedment Depth

- Safety factor for embedment depth is generally 1.3
- Anchored systems require 1.5

Allowable Stresses

- Structural Steel (compression) 0.55 Fy
- Structural Steel (shear) 0.35 Fy
- Sheet Pile 2/3 Fy
- Concrete 1/3 f'c
- Anchor Rods ½ Fy

NO AISC OVERSTRESS ARE ALLOWED

Deflection Criteria
(Table 1)

Horizontal distance from shoring to track CL measured at a right angle from track	Maximum horizontal movement of shoring system	Maximum acceptable horizontal or vertical movement of rail
12′<S<18′	3/8″	¼″
18′ < S < 24′	½″	¼″

Soil Characteristics

- Subsurface Exploration
- Type of Backfill
- Computation of Backfill Pressure
- Compaction

Subsurface Exploration

- Does not involve spelunking
- Make sufficient borings to determine the subsurface conditions
- Investigation in accordance with AREMA Chapter 8 Part 22

Type of Backfill

- Soil classified within 5 types (AREMA table 8-5-1)

Backfill Type	Backfill Description
1	Coarse-grained soil without admixture of fine soil particles, very free draining (clean sand, gravel or broken stone)
2	Coarse-grained soil of low permiability due to admixture of particles of silt size
3	Fine silty sand; granular materials with conspicuous clay content;or residual soil with stones
4	Soft or very soft clay, organic silt; or soft silty clay
5	Medium or stiff clay that may be placed in such a way that negligible amount of water will enter the spaces between the chunks during floods or heavy rains

Computation of Backfill Pressure

- Soil values to be determined directly by soil tests
- If expense of tests is not justifiable:

Type of Backfill	Unit Weight (pcf)	Cohesion "c"	Friction Angle
1	105	0	33 – 42 (38 for broken stone)
2	110	0	30
3	125	0	28
4	100	0	0
5	120	240	0

(AREMA Table 8-5-2)

Compaction

- Place in 8” lifts
- >95% compaction required
- >100% required within 100 feet of bridge ends

Guidelines for Temporary Shoring

- General Criteria
- Contractor Responsibilities
- Information Required
- Types of Shoring
- General Shoring Requirements
- Loading
- Structural Analysis
- **Plan Requirements**

Plan Requirements

- General Plan
- Typical Section
- General Criteria
- Miscellaneous

Review Process

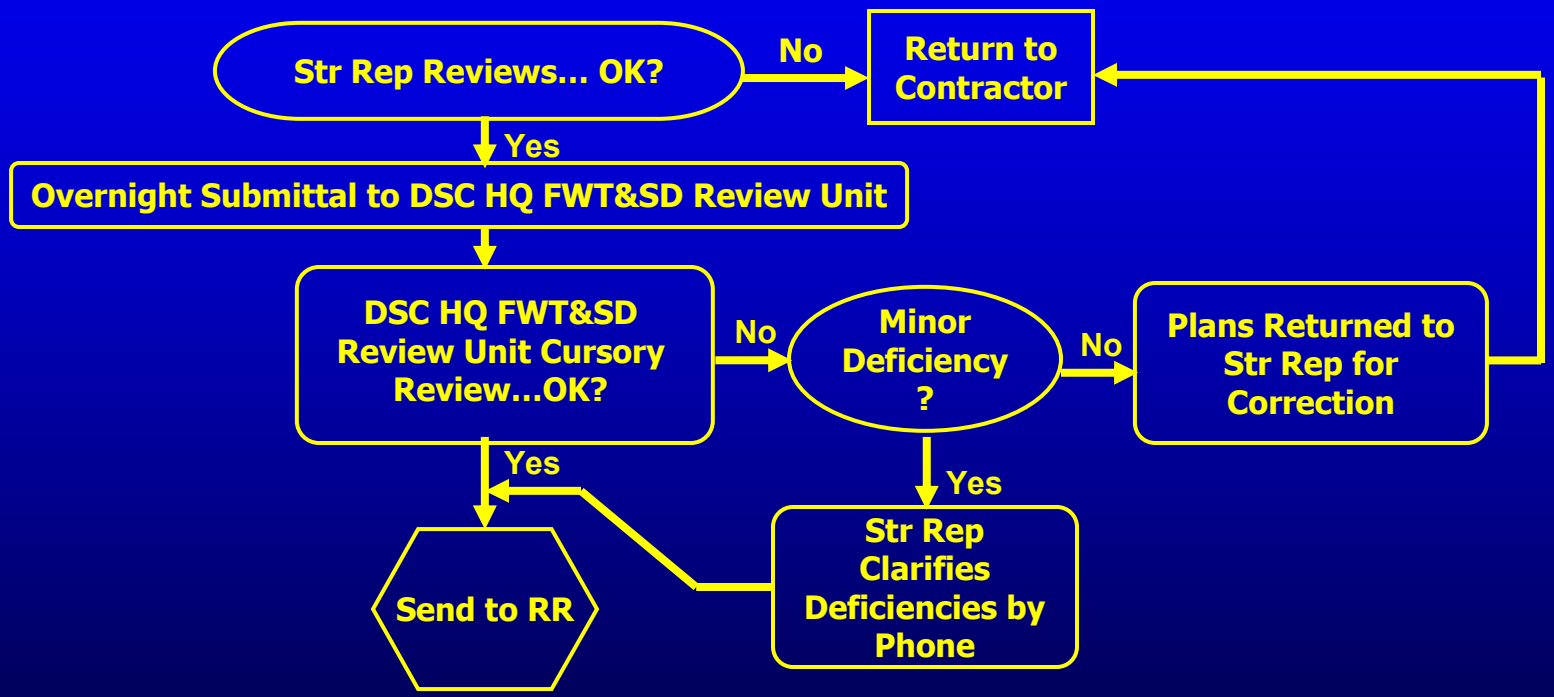

Review Process

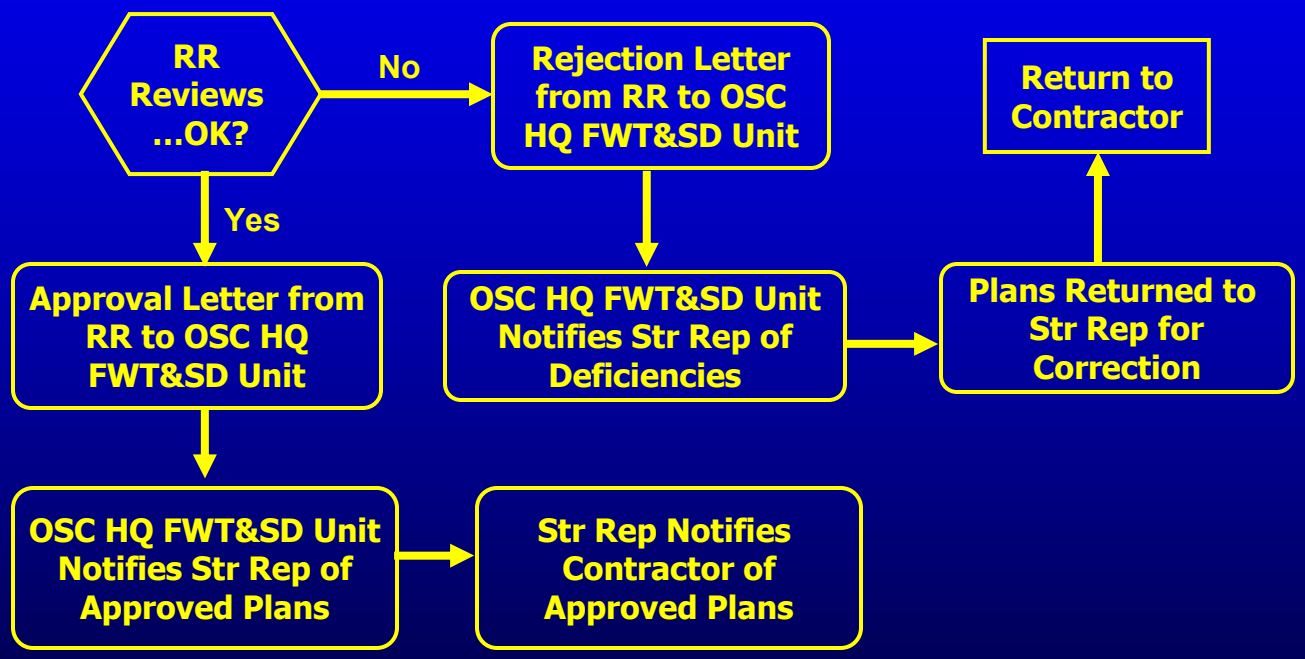

Common Errors

- Submitting the correct number of copies of plans and calculations
- Submit plans as .pdf files when possible
- List of member strengths and stresses
- Title block errors
  - Missing Post Mile, Subdivision, PUC No.

Construction Considerations

- Flagmen
  - Costs can be an issue
- Field Operations
- Elevate Problems
- SR does not talk directly with UPRR engineering staff
  - HQ T&S Engineer is the single point of contact

Shoring Adjacent to Railroads

- Review Times
- Guidelines for Temporary Shoring
- Review Process

References

- Trenching and Shoring Manual Chapter 8
- Bridge Construction Records & Procedures Manual BCM 122.1
- AREMA Manual
- UPRR Guidelines for Design and Construction of Temporary Shoring
- HQ Falsework, Trenching and Shoring Engineer

Questions?

Break!!