Dist	COUNTY	ROUTE	POST MILES TOTAL PROJECT	SHEET No.	TOTAL SHEETS
2	Sis	5	R19.0/R25.3	1	149

IM-005-9(169)E

STATE OF CALIFORNIA
DEPARTMENT OF TRANSPORTATION

PROJECT PLANS FOR CONSTRUCTION ON
STATE HIGHWAY
IN SISKIYOU COUNTY IN AND NEAR WEED FROM ROUTE 97 TO 0.3 MILE SOUTH OF WEED ROADSIDE REST AREA

TO BE SUPPLEMENTED BY STANDARD PLANS DATED MAY 2006

INDEX OF PLANS

SHEET No.	DESCRIPTION
1	TITLE
2-4	TYPICAL CROSS SECTIONS
5-6	KEY MAP
7-32	LAYOUT
33-42	CONSTRUCTION DETAILS
43-51	DRAINAGE DETAILS AND QUANTITIES
52	CONSTRUCTION AREA SIGNS
53-79	STAGE CONSTRUCTION AND TRAFFIC HANDLING PLANS, DETAILS AND QUANTITIES
80-83	TRAFFIC HANDLING DETAILS
84-88	DETOUR PLAN
89-91	PAVEMENT DELINEATION DETAILS AND QUANTITIES
92-94	SUMMARY OF QUANTITIES
95-103	ELECTRICAL
104-149	REVISED AND NEW STANDARD PLANS

THE STANDARD PLANS LIST APPLICABLE TO THIS CONTRACT IS INCLUDED IN THE NOTICE TO BIDDERS AND SPECIAL PROVISIONS BOOK.

LOCATION MAP

END CONSTRUCTION
Sta "B1" 418+50 PM R25.3

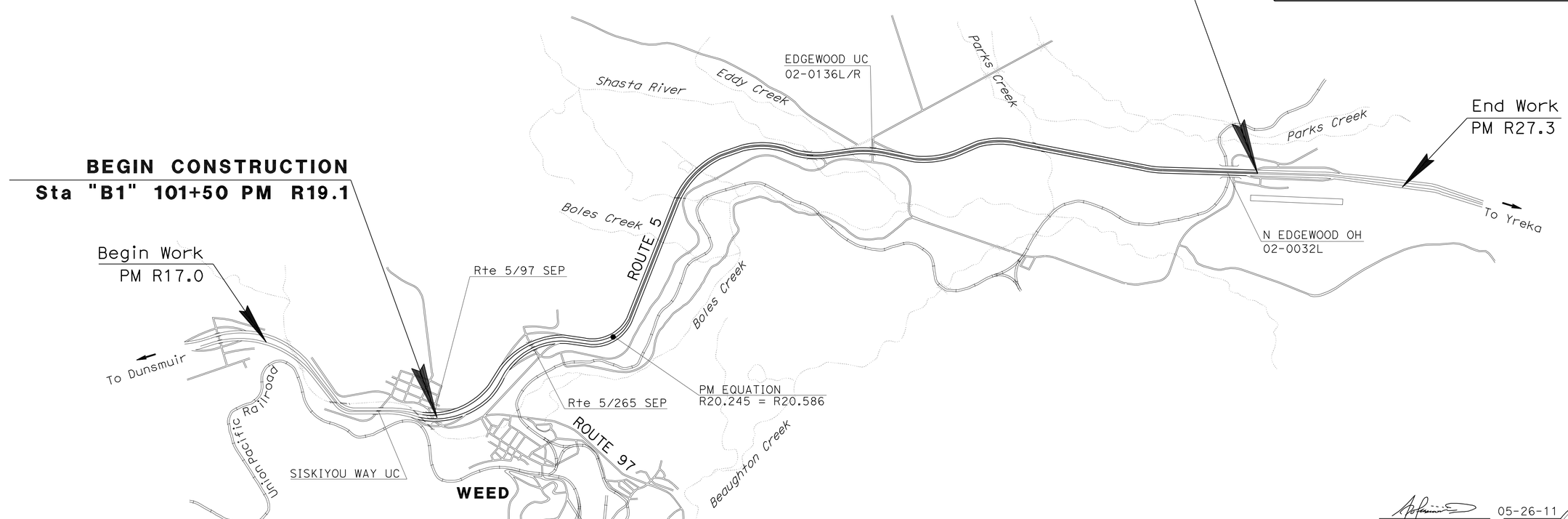

THE CONTRACTOR SHALL POSSESS THE CLASS (OR CLASSES) OF LICENSE AS SPECIFIED IN THE "NOTICE TO BIDDERS."

NO SCALE

05-26-11
PROJECT ENGINEER DATE
REGISTERED CIVIL ENGINEER

May 27, 2011
PLANS APPROVAL DATE

REGISTERED PROFESSIONAL ENGINEER
APOLINARIO W. VIVIT
No. C66046
Exp. 06-30-12
CIVIL
STATE OF CALIFORNIA

THE STATE OF CALIFORNIA OR ITS OFFICERS OR AGENTS SHALL NOT BE RESPONSIBLE FOR THE ACCURACY OR COMPLETENESS OF SCANNED COPIES OF THIS PLAN SHEET.

CONTRACT No.	02-3E7504
PROJECT ID	02000201614

PROJECT MANAGER: TIM HUCKABAY
DESIGN ENGINEER: APOLINARIO VIVIT

P:\proj1\02\3E750_plans\pse\23e750ab001.dgn

LAST REVISION 05-26-11
DATE PLOTTED => 02-AUG-2011
TIME PLOTTED => 10:41

Dist	COUNTY	ROUTE	POST MILES TOTAL PROJECT	SHEET No.	TOTAL SHEETS
02	Sis	5	R19/R25.3	2	149

REGISTERED CIVIL ENGINEER 05-27-11 DATE

05-27-11
PLANS APPROVAL DATE

REGISTERED PROFESSIONAL ENGINEER APOLINARIO W. VIVIT No. C66046 Exp. 06-30-12 CIVIL STATE OF CALIFORNIA

THE STATE OF CALIFORNIA OR ITS OFFICERS OR AGENTS SHALL NOT BE RESPONSIBLE FOR THE ACCURACY OR COMPLETENESS OF SCANNED COPIES OF THIS PLAN SHEET.

NOTES:

1. DIMENSIONS OF THE PAVEMENT STRUCTURES (STRUCTURAL SECTIONS) ARE SUBJECT TO TOLERANCES SPECIFIED IN THE STANDARD SPECIFICATIONS.
2. SUPERELEVATIONS AS SHOWN OR AS DETERMINED BY THE ENGINEER.
3. EXISTING UTILITY FACILITIES HAVE NOT BEEN POSITIVELY LOCATED, AND HAVE NOT BEEN PLOTTED ON PORTIONS OF THESE PLANS.
4. REMOVE AND REPLACE EXISTING EDGE DRAIN SYSTEM FROM "A1" 107+20.75 TO "A1" 164+22 AND FROM "A1" 277+20 TO 410+20.
5. SEE DRAINAGE DETAILS FOR PAVING NEXT TO DI AND GRATED LINE DRAINS.
6. FOR LOCATIONS OF HMA DIKE AND MBGR SEE LAYOUT SHEETS.
7. NEW STRUCTURAL SECTION TO EXTEND 1' BEYOND ETW.
8. COLD PLANE Exist AC DOWN TO TOP OF PCC SLAB.
9. RAP FROM STATION LIMITS SHOWN TO BE USED FOR HMA25.

LEGEND:

[1] 0.45'-0.5' CPACP (8)
CECP

ABBREVIATIONS:

CPACP	COLD PLANE ASPHALT CONCRETE PAVEMENT
RS	SHOULDER RUMBLE STRIP (HMA, GROUND-IN INDENTATIONS)
SB	IMPORTED MATERIAL (SHOULDER BACKING)
GL	GUTTER LIP
UM	UNSUITABLE MATERIAL
CECP	CRACK Exist CONCRETE PAVEMENT
(No.)	SEE NOTE NUMBER
ARSC	ASPHALT-RUBBER SEAL COAT
HMA15	HMA (15% Max RAP, LONG LIFE)
HMA25	HMA (25% RAP, LONG LIFE)
RAP	RECLAIMED ASPHALT PAVEMENT

DESIGN DESIGNATION

2007 ADT	16500
2052 (40-Yr) ADT	30500
2052 (40-Yr) DHV	4600
TRUCKS	24%
DESIGN SPEED	60/70 MPH

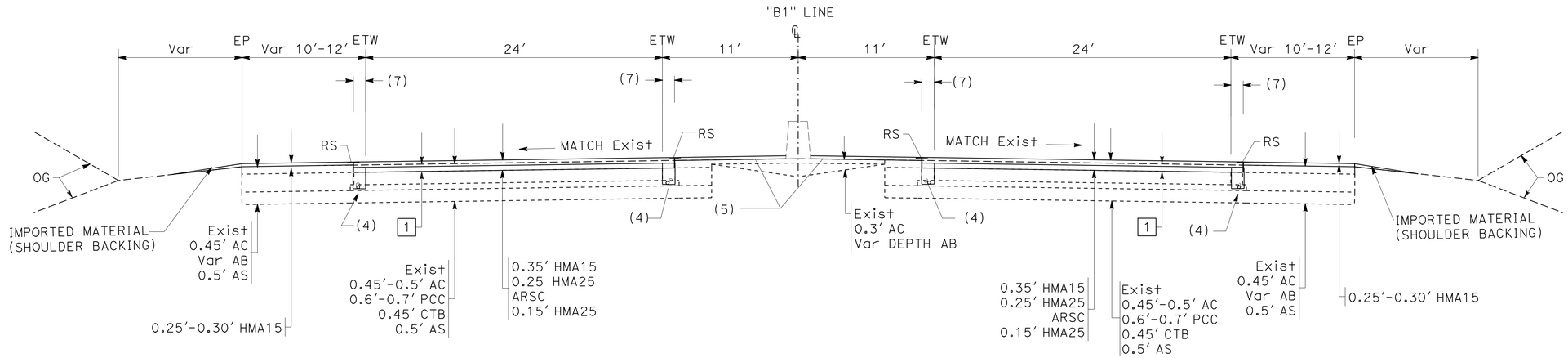

SOUTHBOUND

"B1" 162+40 TO "B1" 168+30

NORTHBOUND

"B1" 162+40 TO "B1" 168+30

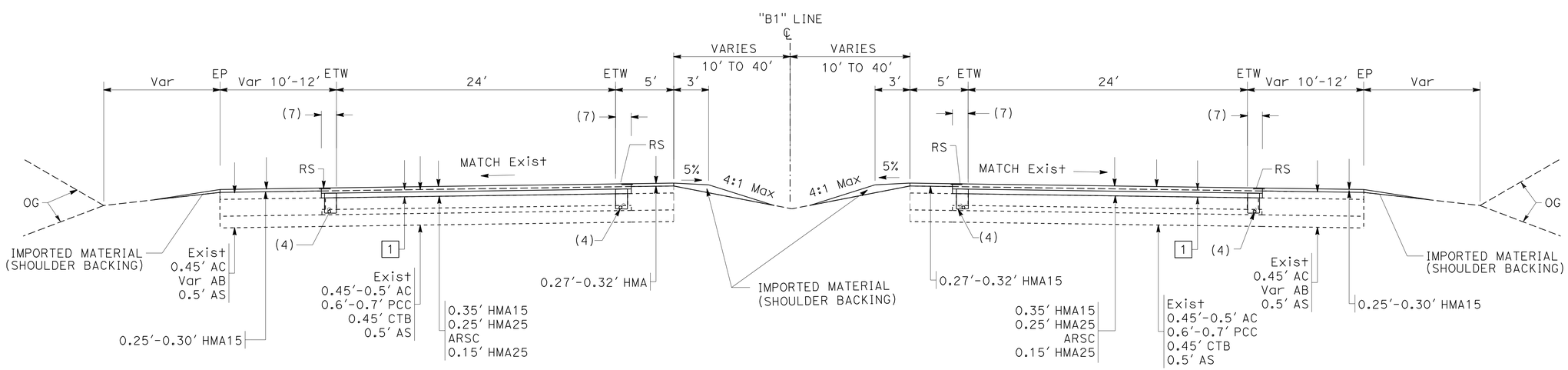

SOUTHBOUND

"B1" 107+21 TO "B1" 147+68
"B1" 149+35 TO "B1" 162+40

NORTHBOUND

"B1" 107+79 TO "B1" 147+71
"B1" 149+41 TO "B1" 162+40

ROUTE 5 MAINLINE

"B1" 107+21 TO "B1" 168+30
(SEE NOTE 9)

TYPICAL CROSS SECTIONS

NO SCALE

X-1

REVISED BY | DATE REVISED
LORI EWENS | APOLINARIO VIVIT
CALCULATED-DESIGNED BY | CHECKED BY
FUNCTIONAL SUPERVISOR | APOLINARIO VIVIT

STATE OF CALIFORNIA - DEPARTMENT OF TRANSPORTATION
Caltrans
DESIGN

P:\proj1\02\3E750_plans\pse\23e750ca001.dgn

LAST REVISION 05-27-11 | DATE PLOTTED => 01-JUN-2011 | TIME PLOTTED => 09:50

Dist	COUNTY	ROUTE	POST MILES TOTAL PROJECT	SHEET No.	TOTAL SHEETS
02	Sis	5	R19/R25.3	3	149

REGISTERED CIVIL ENGINEER 05-27-11 DATE

05-27-11
PLANS APPROVAL DATE

REGISTERED PROFESSIONAL ENGINEER
APOLINARIO W. VIVIT
No. C66046
Exp. 06-30-12
CIVIL
STATE OF CALIFORNIA

THE STATE OF CALIFORNIA OR ITS OFFICERS OR AGENTS SHALL NOT BE RESPONSIBLE FOR THE ACCURACY OR COMPLETENESS OF SCANNED COPIES OF THIS PLAN SHEET.

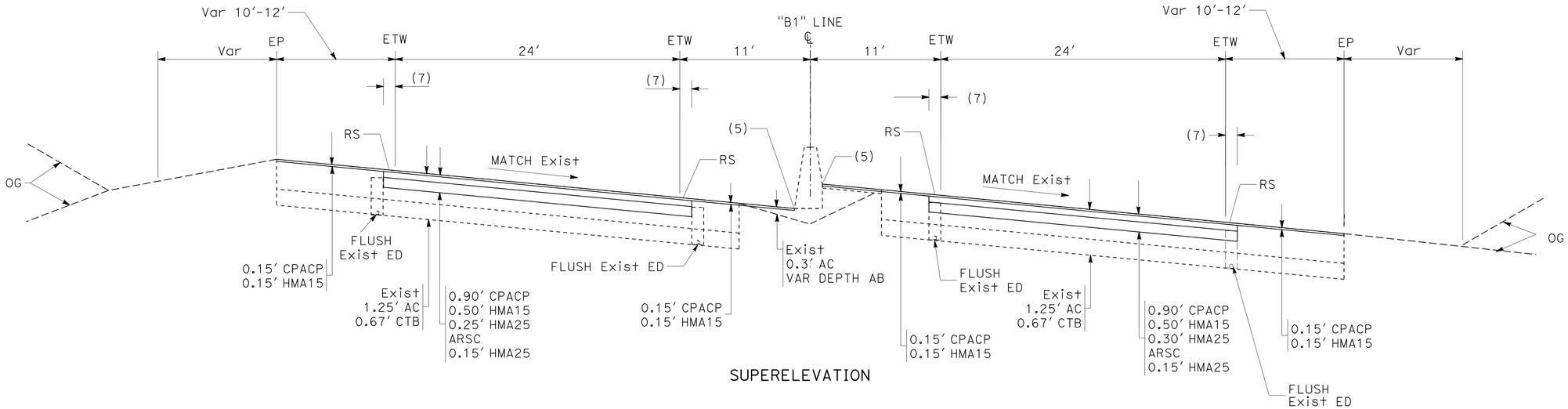

SUPERELEVATION

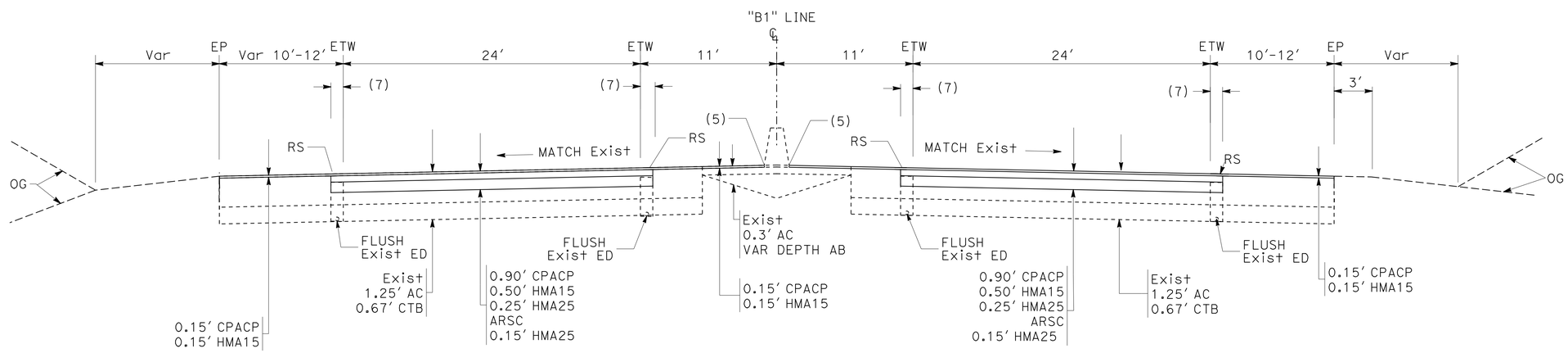

SOUTHBOUND

"B1" 168+30 TO "B1" 274+22

NORTHBOUND

"B1" 168+30 TO "B1" 275+12

ROUTE 5 MAINLINE

"B1" 168+30 TO "B1" 275+12

TYPICAL CROSS SECTIONS

NO SCALE

X-2

REVISED BY | DATE REVISED

LORI EWENS | APOLINARIO VIVIT

CALCULATED-DESIGNED BY | CHECKED BY

FUNCTIONAL SUPERVISOR: APOLINARIO VIVIT

STATE OF CALIFORNIA - DEPARTMENT OF TRANSPORTATION

Caltrans® DESIGN

P:\proj1\02\3E750_plans\pse\23e750ca002.dgn

LAST REVISION 05-27-11 | DATE PLOTTED => 01-JUN-2011 | TIME PLOTTED => 09:51

Dist	COUNTY	ROUTE	POST MILES TOTAL PROJECT	SHEET No.	TOTAL SHEETS
02	Sis	5	R19/R25.3	4	149

REGISTERED CIVIL ENGINEER DATE 05-27-11

PLANS APPROVAL DATE 05-27-11

REGISTERED PROFESSIONAL ENGINEER APOLINARIO W. VIVIT No. C66046 Exp. 06-30-12 CIVIL STATE OF CALIFORNIA

THE STATE OF CALIFORNIA OR ITS OFFICERS OR AGENTS SHALL NOT BE RESPONSIBLE FOR THE ACCURACY OR COMPLETENESS OF SCANNED COPIES OF THIS PLAN SHEET.

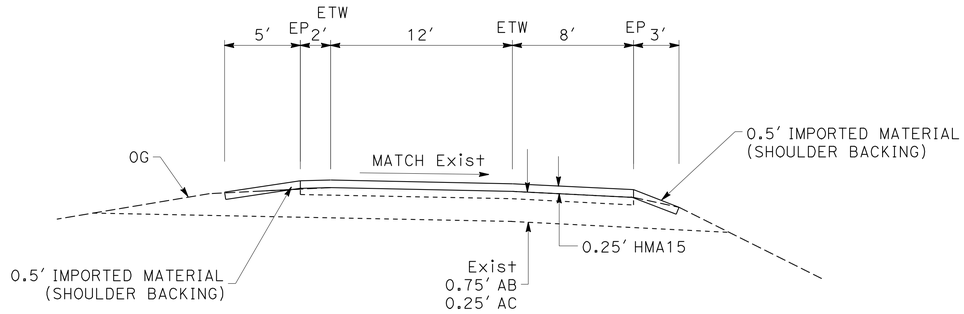

RAMP OVERLAY

EDGEWOOD UC, PM 23.0
SB OFF RAMP
NB ON RAMP

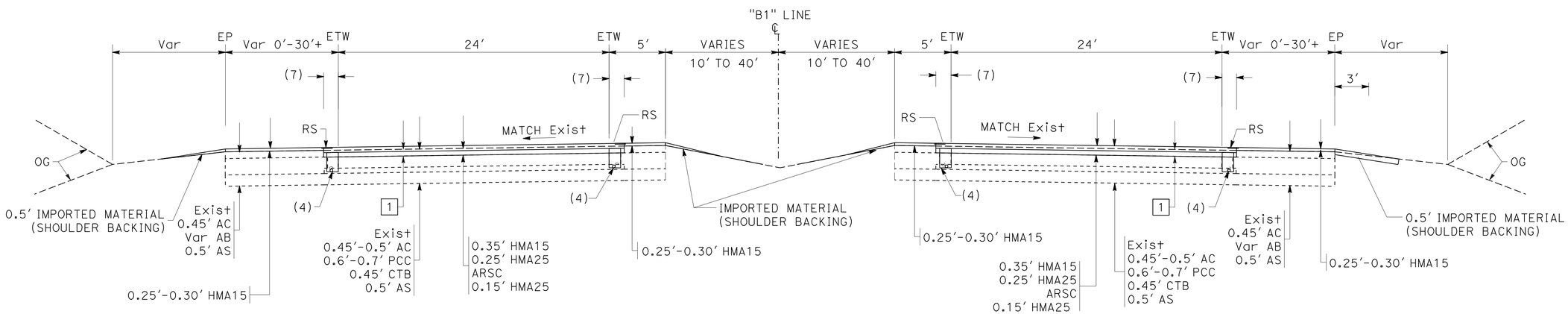

SOUTHBOUND

"B1" 277+26 TO "B1" 295+13
"B1" 296+64 TO "B1" 412+75 BB

NORTHBOUND

"B1" 277+94 TO "B1" 295+13
"B1" 296+64 TO "B1" 412+75 BB

ROUTE 5 MAINLINE

"B1" 277+26 TO "B1" 412+75
(SEE NOTE 9)

TYPICAL CROSS SECTIONS

NO SCALE

X-3

REVISED BY | DATE REVISED
LORI EWENS | APOLINARIO VIVIT
CALCULATED-DESIGNED BY | CHECKED BY
FUNCTIONAL SUPERVISOR | APOLINARIO VIVIT

STATE OF CALIFORNIA - DEPARTMENT OF TRANSPORTATION
Caltrans DESIGN

P:\proj1\02\3E750_plans\pse\23e750ca003.dgn

LAST REVISION 05-27-11 | DATE PLOTTED => 01-JUN-2011 | TIME PLOTTED => 09:51

Dist	COUNTY	ROUTE	POST MILES TOTAL PROJECT	SHEET No.	TOTAL SHEETS
02	Sis	5	R19/R25.3	5	149

REGISTERED CIVIL ENGINEER 05-27-11 DATE

05-27-11
PLANS APPROVAL DATE

REGISTERED PROFESSIONAL ENGINEER
APOLINARIO W. VIVIT
No. C66046
Exp. 06-30-12
CIVIL
STATE OF CALIFORNIA

THE STATE OF CALIFORNIA OR ITS OFFICERS OR AGENTS SHALL NOT BE RESPONSIBLE FOR THE ACCURACY OR COMPLETENESS OF SCANNED COPIES OF THIS PLAN SHEET.

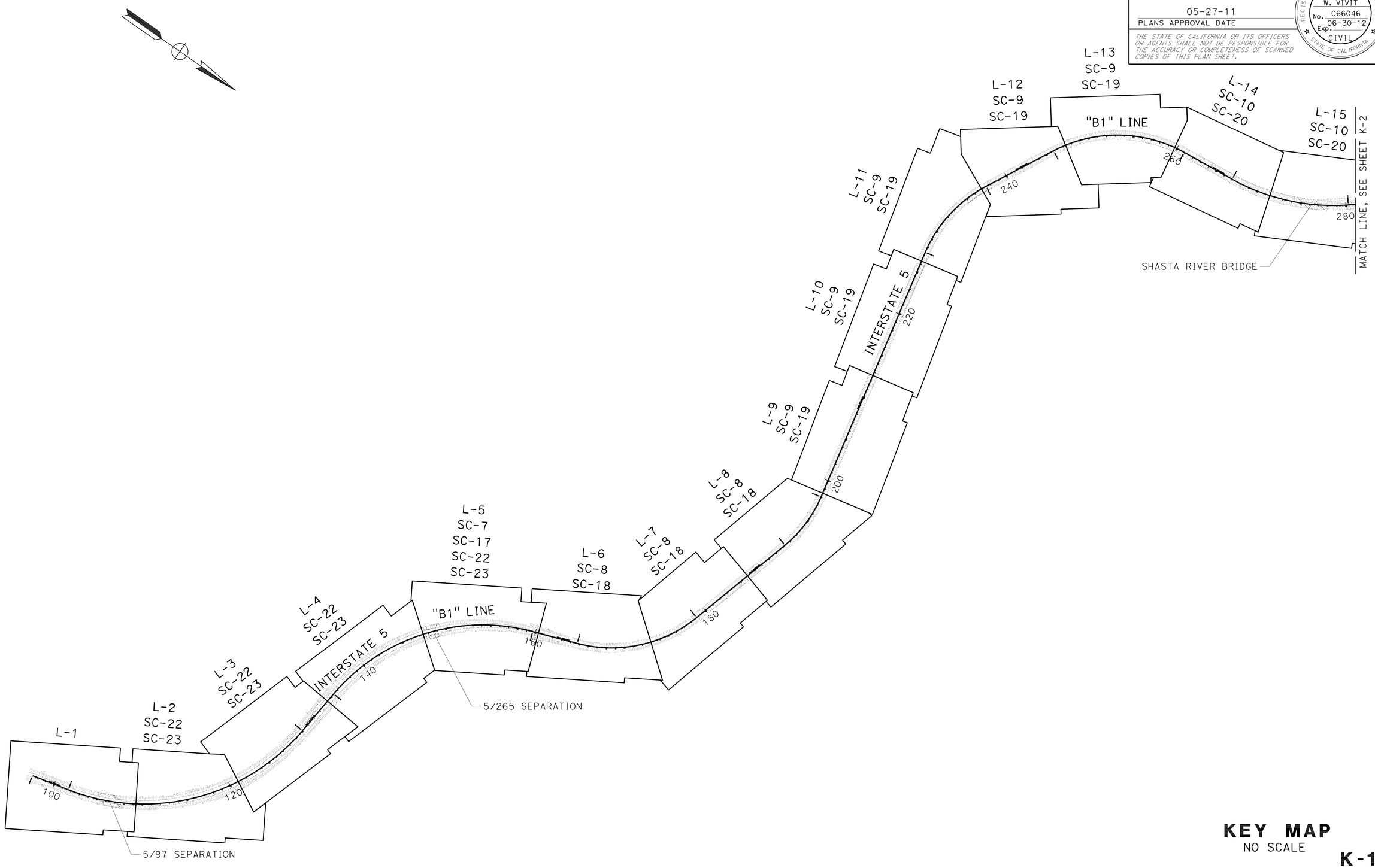

KEY MAP
NO SCALE

K-1

REVISED BY	DATE REVISED

BRIAN STEINER
APOLINARIO VIVIT

CALCULATED-DESIGNED BY
CHECKED BY

FUNCTIONAL SUPERVISOR
APOLINARIO VIVIT

STATE OF CALIFORNIA - DEPARTMENT OF TRANSPORTATION
Caltrans
DESIGN

P:\proj1\02\3E750_plans\pse\23e750da001.dgn

LAST REVISION 05-27-11
DATE PLOTTED => 01-JUN-2011
TIME PLOTTED => 09:51

Dist	COUNTY	ROUTE	POST MILES TOTAL PROJECT	SHEET No.	TOTAL SHEETS
02	Sis	5	R19/R25.3	6	149

REGISTERED CIVIL ENGINEER 05-27-11 DATE

05-27-11
PLANS APPROVAL DATE

REGISTERED PROFESSIONAL ENGINEER
APOLINARIO W. VIVIT
No. C66046
Exp. 06-30-12
CIVIL
STATE OF CALIFORNIA

THE STATE OF CALIFORNIA OR ITS OFFICERS OR AGENTS SHALL NOT BE RESPONSIBLE FOR THE ACCURACY OR COMPLETENESS OF SCANNED COPIES OF THIS PLAN SHEET.

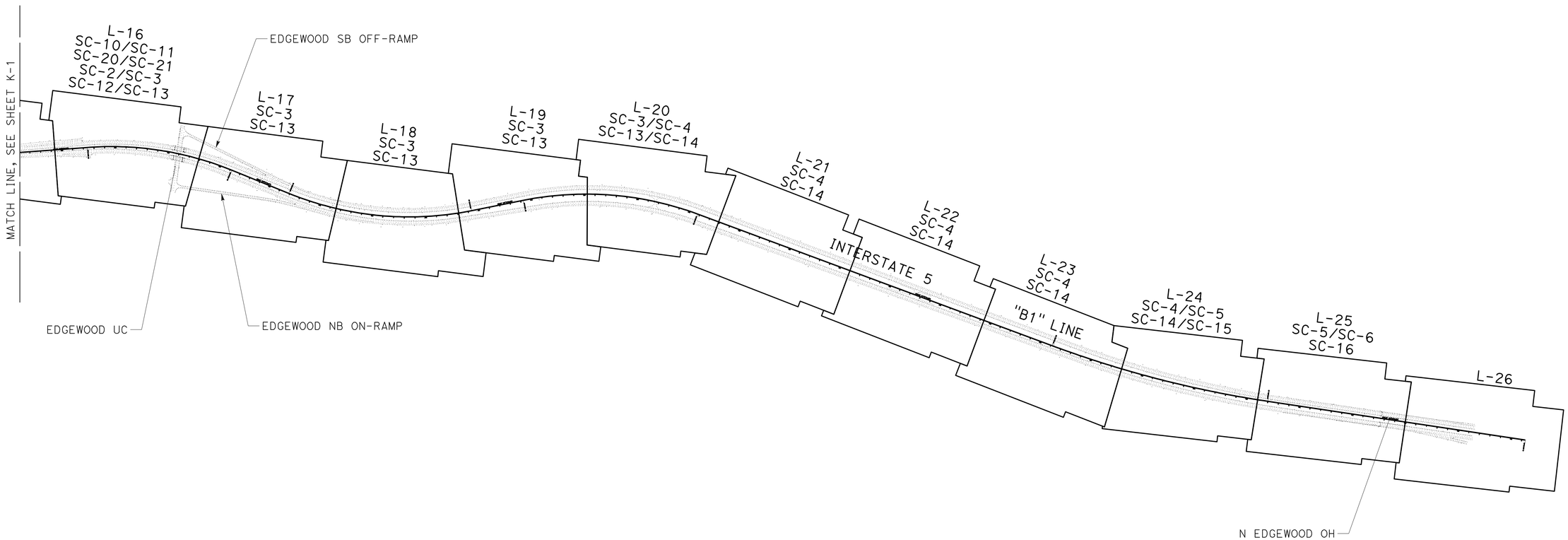

KEY MAP
NO SCALE

K-2

REVISED BY	DATE REVISED

CALCULATED-DESIGNED BY	BRIAN STEINER
CHECKED BY	APOLINARIO VIVIT
FUNCTIONAL SUPERVISOR	APOLINARIO VIVIT

STATE OF CALIFORNIA - DEPARTMENT OF TRANSPORTATION
Caltrans®
DESIGN

P:\proj\02\3E750_plans\pse\23e750da002.dgn

LAST REVISION 05-27-11
DATE PLOTTED => 01-JUN-2011
TIME PLOTTED => 09:51

Dist	COUNTY	ROUTE	POST MILES TOTAL PROJECT	SHEET No.	TOTAL SHEETS
02	Sis	5	R19/R25.3	7	149

REGISTERED CIVIL ENGINEER 05-27-11 DATE

05-27-11
PLANS APPROVAL DATE

REGISTERED PROFESSIONAL ENGINEER APOLINARIO W. VIVIT No. C66046 Exp. 06-30-12 CIVIL STATE OF CALIFORNIA

THE STATE OF CALIFORNIA OR ITS OFFICERS OR AGENTS SHALL NOT BE RESPONSIBLE FOR THE ACCURACY OR COMPLETENESS OF SCANNED COPIES OF THIS PLAN SHEET.

NOTES:

1. FOR ACCURATE RIGHT OF WAY DATA, CONTACT RIGHT OF WAY ENGINEERING AT THE DISTRICT OFFICE.
2. EXISTING UTILITY FACILITIES HAVE NOT BEEN POSITIVELY IDENTIFIED.

LEGEND:

- POLYESTER CONCRETE OVERLAY SEE CONSTRUCTION DETAILS
- PIPE DOWNDRAIN ENTRANCE TAPER
- DRAINAGE SYSTEM No.
- DRAINAGE UNIT
- FLOW DIRECTION

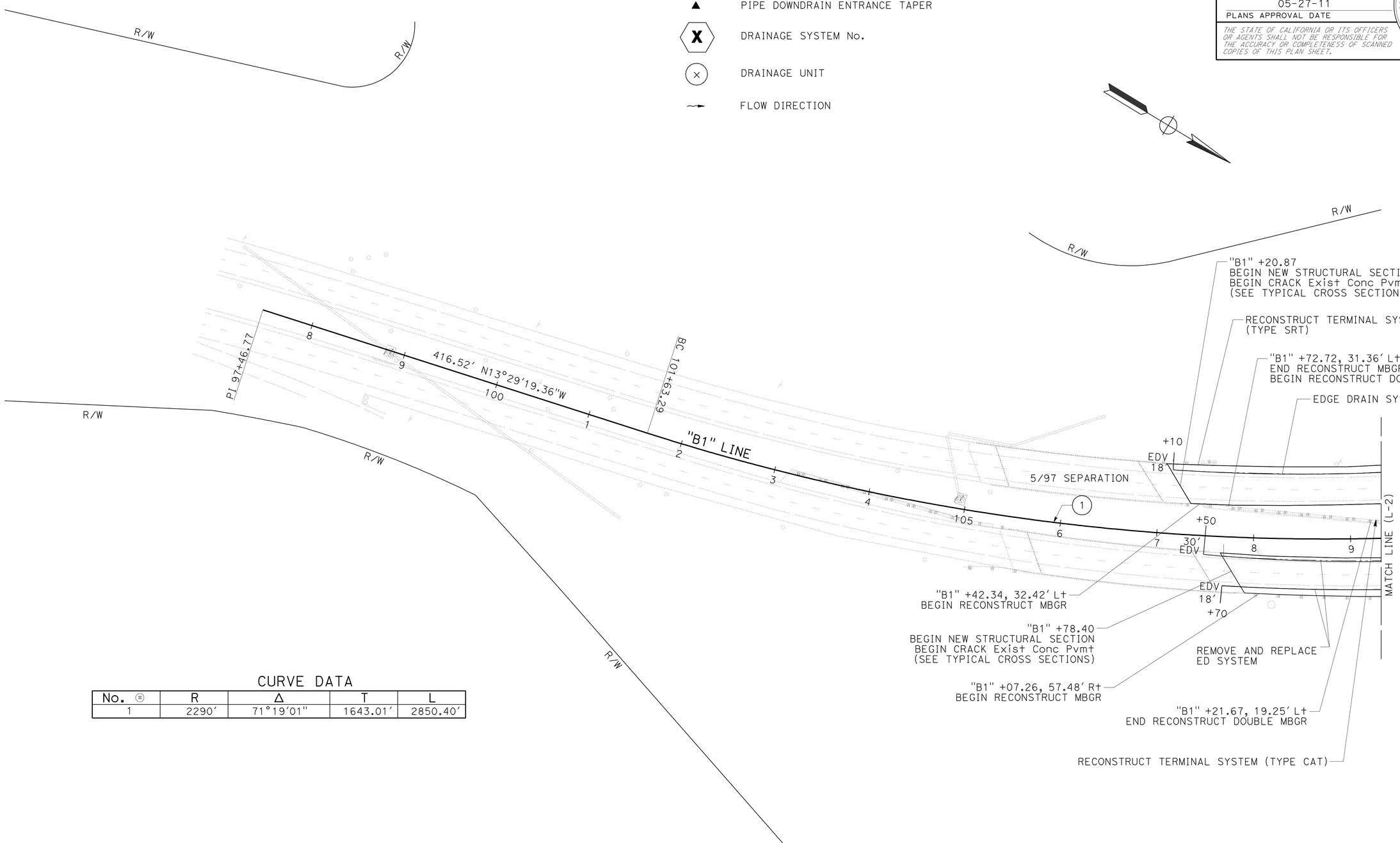

CURVE DATA

No. ⊕	R	Δ	T	L
1	2290'	71°19'01"	1643.01'	2850.40'

LAYOUT

SCALE: 1" = 50'

L-1

REVISED BY	DATE REVISED
BRIAN STEINER	APOLINARIO VIVIT
CALCULATED-DESIGNED BY	CHECKED BY
FUNCTIONAL SUPERVISOR	APOLINARIO VIVIT

STATE OF CALIFORNIA - DEPARTMENT OF TRANSPORTATION
Caltrans
DESIGN

P:\proj1\02\3E750_plans\pse\23e750ea001.dgn

LAST REVISION 05-27-11 | DATE PLOTTED => 01-JUN-2011 | TIME PLOTTED => 09:51

Dist	COUNTY	ROUTE	POST MILES TOTAL PROJECT	SHEET No.	TOTAL SHEETS
02	Sis	5	R19/R25.3	8	149

REGISTERED CIVIL ENGINEER 05-27-11 DATE

05-27-11
PLANS APPROVAL DATE

REGISTERED PROFESSIONAL ENGINEER
APOLINARIO W. VIVIT
No. C66046
Exp. 06-30-12
CIVIL
STATE OF CALIFORNIA

THE STATE OF CALIFORNIA OR ITS OFFICERS OR AGENTS SHALL NOT BE RESPONSIBLE FOR THE ACCURACY OR COMPLETENESS OF SCANNED COPIES OF THIS PLAN SHEET.

NOTES:

1. FOR ACCURATE RIGHT OF WAY DATA, CONTACT RIGHT OF WAY ENGINEERING AT THE DISTRICT OFFICE.
2. EXISTING UTILITY FACILITIES HAVE NOT BEEN POSITIVELY IDENTIFIED.

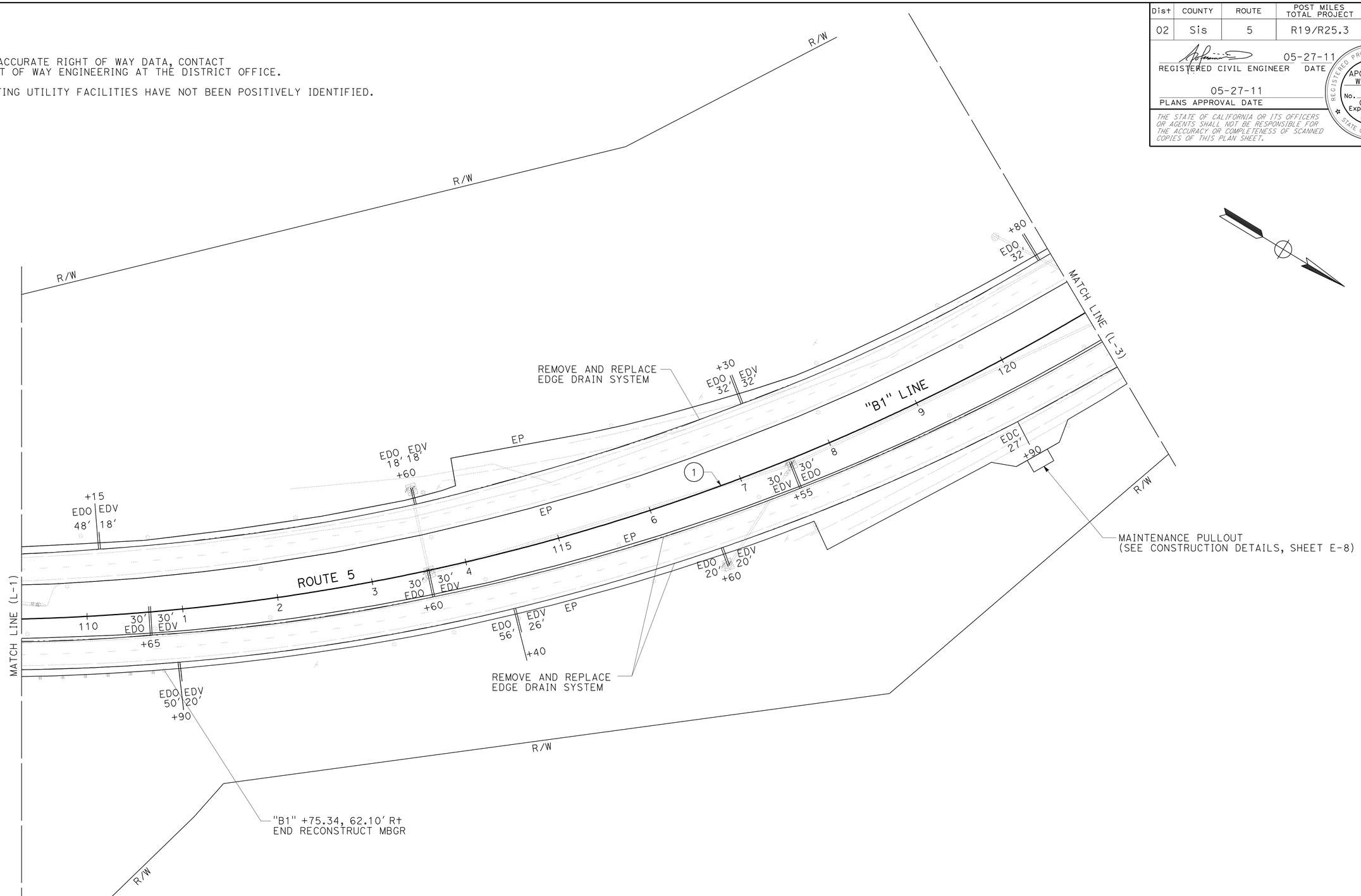

LAYOUT

SCALE: 1" = 50'

L-2

STATE OF CALIFORNIA - DEPARTMENT OF TRANSPORTATION
Caltrans DESIGN

FUNCTIONAL SUPERVISOR: APOLINARIO VIVIT
CALCULATED-DESIGNED BY: BRIAN STEINER
CHECKED BY: APOLINARIO VIVIT
REVISED BY
DATE REVISED

P:\proj1\02\3E750_plans\pse\23e750ea002.dgn

LAST REVISION 05-27-11
DATE PLOTTED => 01-JUN-2011
TIME PLOTTED => 09:51

BORDER LAST REVISED 7/2/2010
USERNAME => s115152
DGN FILE => 23e750ea002.dgn
RELATIVE BORDER SCALE IS IN INCHES 0 1 2 3
UNIT 0317
PROJECT NUMBER & PHASE 02000201611

Dist	COUNTY	ROUTE	POST MILES TOTAL PROJECT	SHEET No.	TOTAL SHEETS
02	Sis	5	R19/R25.3	9	149

REGISTERED CIVIL ENGINEER DATE 05-27-11

PLANS APPROVAL DATE 05-27-11

REGISTERED PROFESSIONAL ENGINEER APOLINARIO W. VIVIT No. C66046 Exp. 06-30-12 CIVIL STATE OF CALIFORNIA

THE STATE OF CALIFORNIA OR ITS OFFICERS OR AGENTS SHALL NOT BE RESPONSIBLE FOR THE ACCURACY OR COMPLETENESS OF SCANNED COPIES OF THIS PLAN SHEET.

NOTES:

1. FOR ACCURATE RIGHT OF WAY DATA, CONTACT RIGHT OF WAY ENGINEERING AT THE DISTRICT OFFICE.
2. EXISTING UTILITY FACILITIES HAVE NOT BEEN POSITIVELY IDENTIFIED.

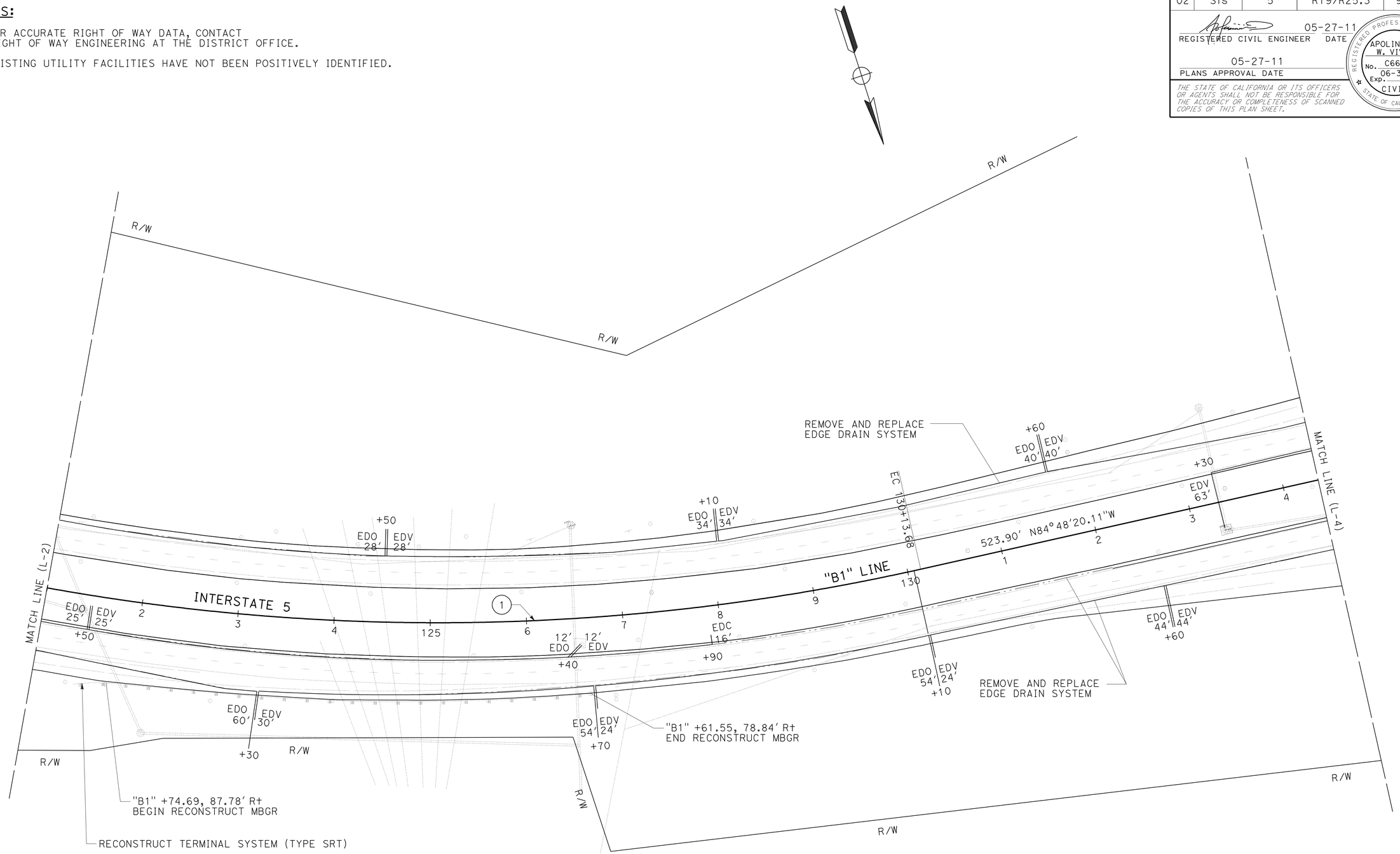

LAYOUT

SCALE: 1" = 50′

L-3

REVISED BY	DATE REVISED
BRIAN STEINER	APOLINARIO VIVIT
CALCULATED-DESIGNED BY	CHECKED BY
FUNCTIONAL SUPERVISOR	APOLINARIO VIVIT

STATE OF CALIFORNIA - DEPARTMENT OF TRANSPORTATION

Caltrans® **DESIGN**

P:\proj1\02\3E750_plans\pse\23e750ea003.dgn

LAST REVISION 05-27-11 | DATE PLOTTED => 01-JUN-2011 | TIME PLOTTED => 09:51

Dist	COUNTY	ROUTE	POST MILES TOTAL PROJECT	SHEET No.	TOTAL SHEETS
02	Sis	5	R19/R25.3	10	149

REGISTERED CIVIL ENGINEER 05-27-11 DATE

05-27-11
PLANS APPROVAL DATE

REGISTERED PROFESSIONAL ENGINEER APOLINARIO W. VIVIT No. C66046 Exp. 06-30-12 CIVIL STATE OF CALIFORNIA

THE STATE OF CALIFORNIA OR ITS OFFICERS OR AGENTS SHALL NOT BE RESPONSIBLE FOR THE ACCURACY OR COMPLETENESS OF SCANNED COPIES OF THIS PLAN SHEET.

NOTES:

1. FOR ACCURATE RIGHT OF WAY DATA, CONTACT RIGHT OF WAY ENGINEERING AT THE DISTRICT OFFICE.
2. EXISTING UTILITY FACILITIES HAVE NOT BEEN POSITIVELY IDENTIFIED.

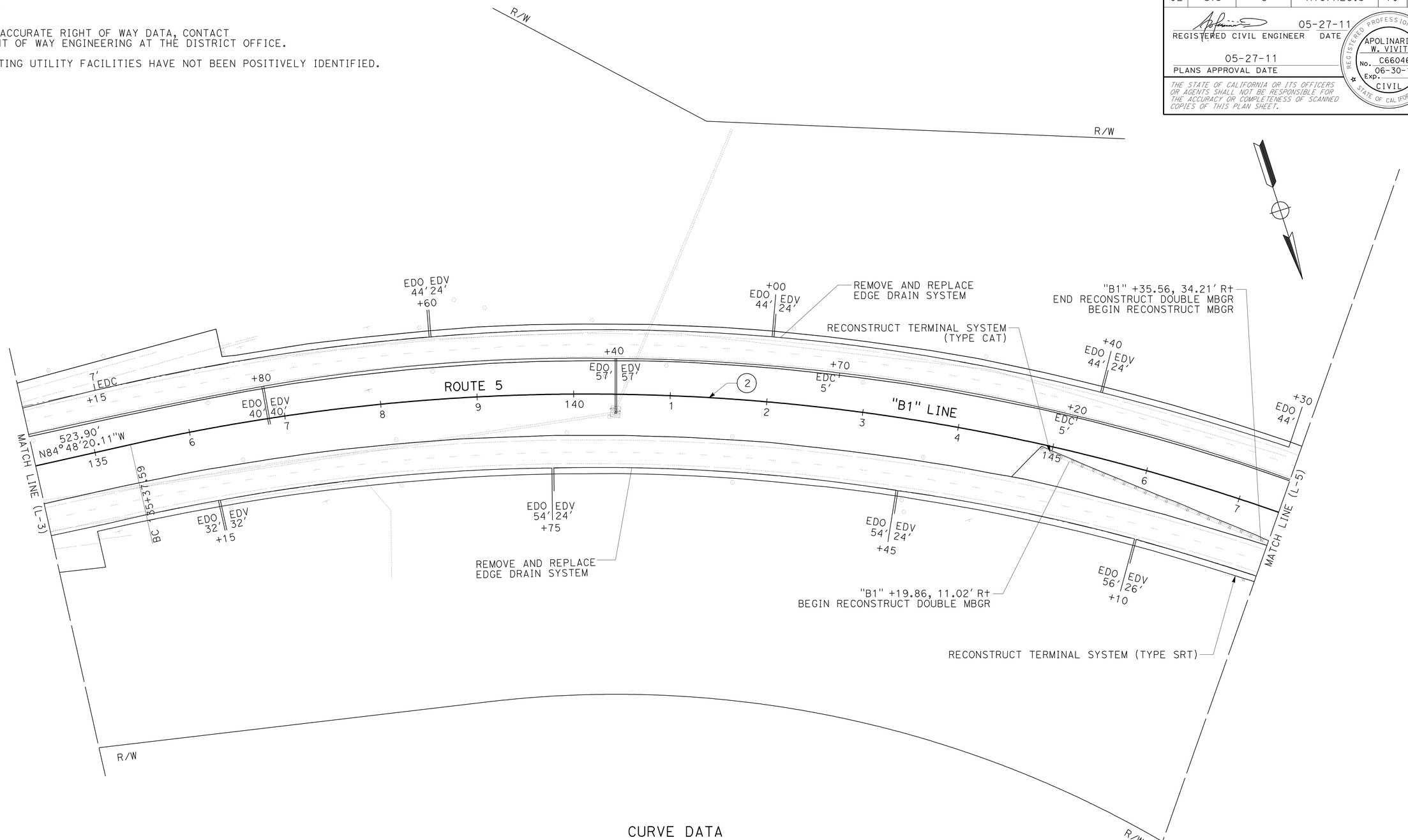

CURVE DATA

No. ②	R	Δ	T	L
2	2154'	64°46'28"	1366.30'	2435.16'

LAYOUT

SCALE: 1" = 50'

L-4

REVISED BY | DATE REVISED
BRIAN STEINER | APOLINARIO VIVIT
CALCULATED-DESIGNED BY | CHECKED BY
FUNCTIONAL SUPERVISOR | APOLINARIO VIVIT
STATE OF CALIFORNIA - DEPARTMENT OF TRANSPORTATION
Caltrans
DESIGN

P:\proj1\02\3E750_plans\pse\23e750ea004.dgn

LAST REVISION 05-27-11 | DATE PLOTTED => 01-JUN-2011 TIME PLOTTED => 09:51

Dist	COUNTY	ROUTE	POST MILES TOTAL PROJECT	SHEET No.	TOTAL SHEETS
02	Sis	5	R19/R25.3	11	149

REGISTERED CIVIL ENGINEER DATE 05-27-11

05-27-11
PLANS APPROVAL DATE

REGISTERED PROFESSIONAL ENGINEER APOLINARIO W. VIVIT No. C66046 Exp. 06-30-12 CIVIL STATE OF CALIFORNIA

THE STATE OF CALIFORNIA OR ITS OFFICERS OR AGENTS SHALL NOT BE RESPONSIBLE FOR THE ACCURACY OR COMPLETENESS OF SCANNED COPIES OF THIS PLAN SHEET.

NOTES:

1. FOR ACCURATE RIGHT OF WAY DATA, CONTACT RIGHT OF WAY ENGINEERING AT THE DISTRICT OFFICE.
2. EXISTING UTILITY FACILITIES HAVE NOT BEEN POSITIVELY IDENTIFIED.

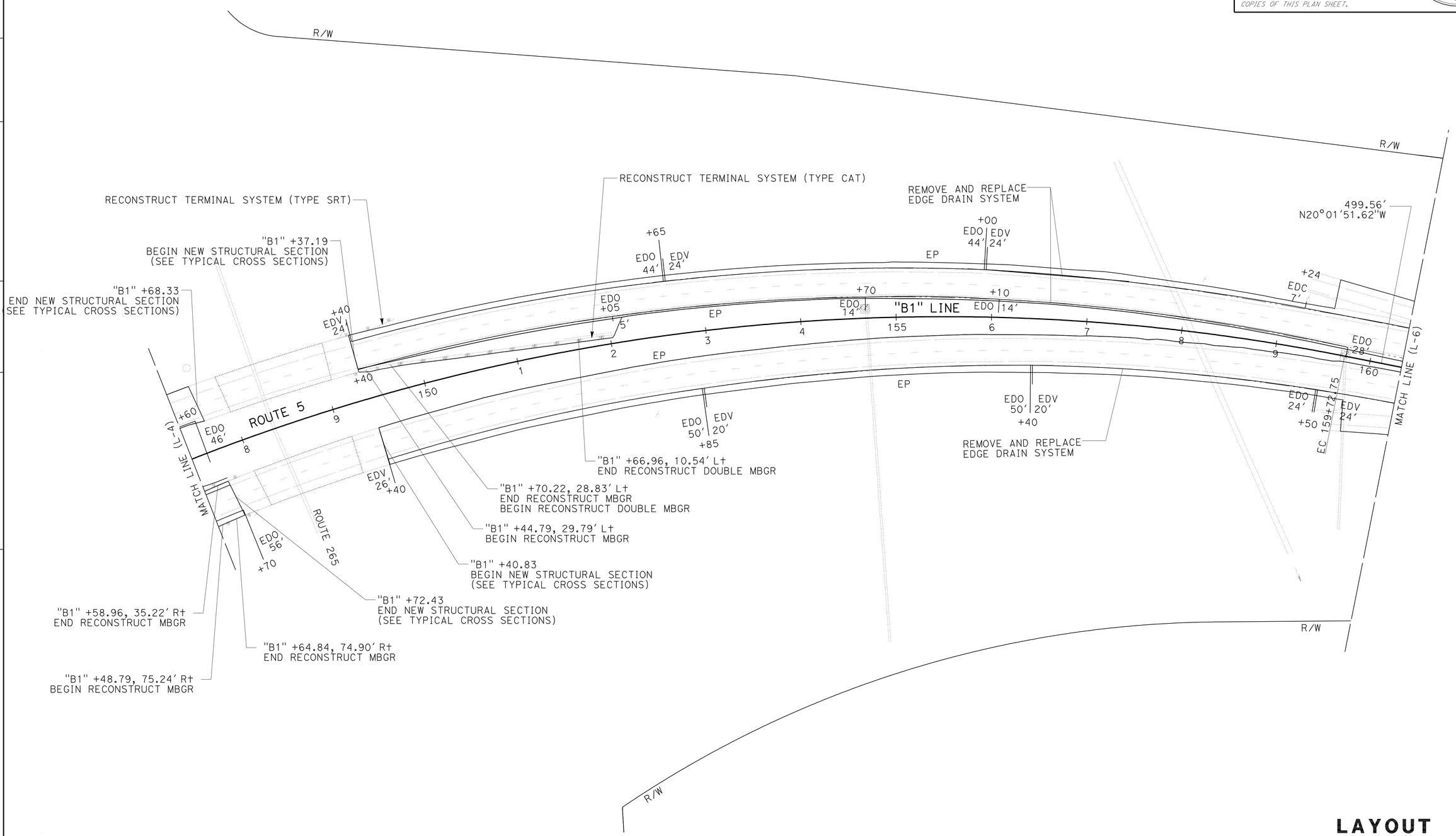

LAYOUT

SCALE: 1" = 50'

L-5

REVISED BY	DATE REVISED
BRIAN STEINER	APOLINARIO VIVIT
CALCULATED-DESIGNED BY	CHECKED BY
FUNCTIONAL SUPERVISOR	APOLINARIO VIVIT

STATE OF CALIFORNIA - DEPARTMENT OF TRANSPORTATION

Caltrans® **DESIGN**

P:\proj1\02\3E750_plans\pse\23e750ea005.dgn

LAST REVISION 05-27-11 | DATE PLOTTED => 01-JUN-2011 TIME PLOTTED => 09:51

Dist	COUNTY	ROUTE	POST MILES TOTAL PROJECT	SHEET No.	TOTAL SHEETS
02	Sis	5	R19/R25.3	12	149

REGISTERED CIVIL ENGINEER DATE 05-27-11

05-27-11
PLANS APPROVAL DATE

REGISTERED PROFESSIONAL ENGINEER
APOLINARIO W. VIVIT
No. C66046
Exp. 06-30-12
CIVIL
STATE OF CALIFORNIA

THE STATE OF CALIFORNIA OR ITS OFFICERS OR AGENTS SHALL NOT BE RESPONSIBLE FOR THE ACCURACY OR COMPLETENESS OF SCANNED COPIES OF THIS PLAN SHEET.

NOTES:

1. FOR ACCURATE RIGHT OF WAY DATA, CONTACT RIGHT OF WAY ENGINEERING AT THE DISTRICT OFFICE.
2. EXISTING UTILITY FACILITIES HAVE NOT BEEN POSITIVELY IDENTIFIED.

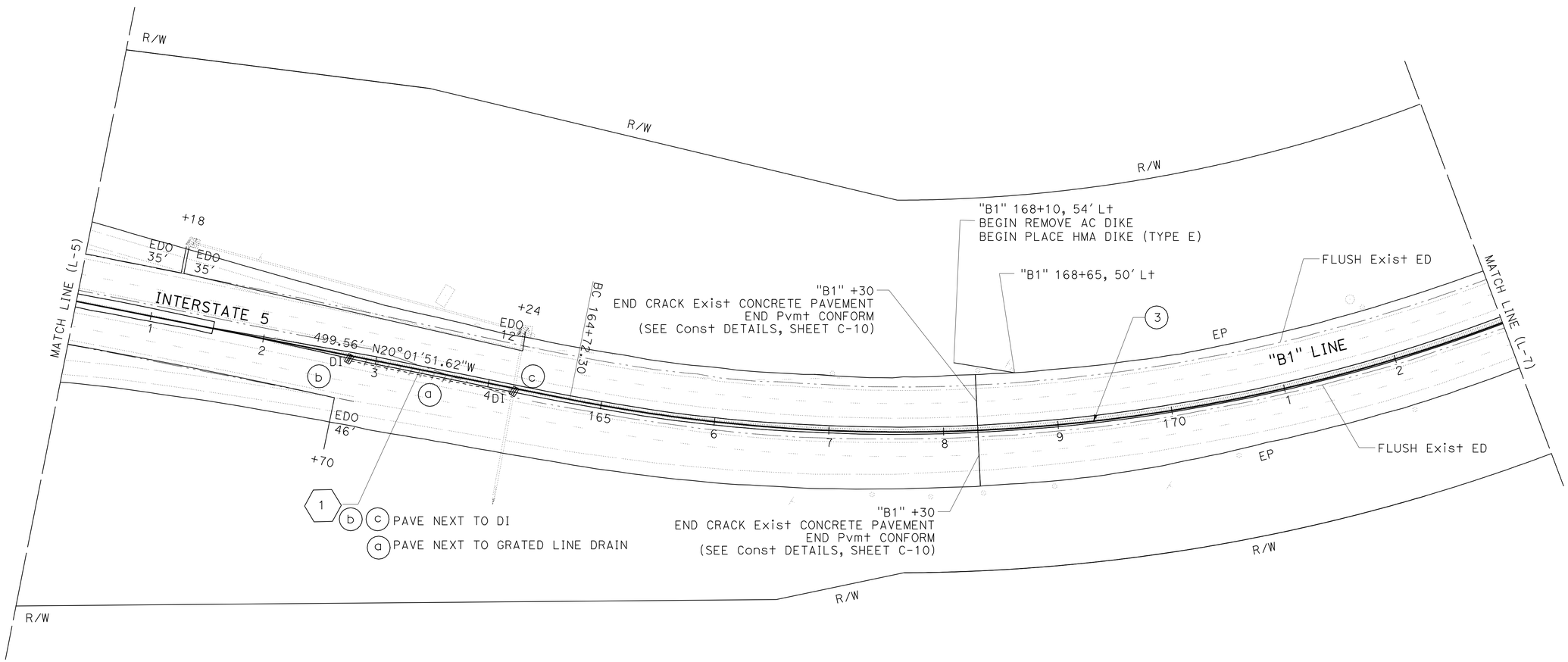

CURVE DATA

No. ⊛	R	Δ	T	L
3	1484'	54°20'00"	761.58'	1407.27'

LAYOUT

SCALE: 1" = 50'

L-6

STATE OF CALIFORNIA - DEPARTMENT OF TRANSPORTATION
Caltrans® DESIGN

FUNCTIONAL SUPERVISOR: APOLINARIO VIVIT
CALCULATED-DESIGNED BY: BRIAN STEINER
CHECKED BY: APOLINARIO VIVIT
REVISED BY
DATE REVISED

P:\proj\02\3E750_plans\pse\23e750ea006.dgn

LAST REVISION 05-27-11
DATE PLOTTED => 01-JUN-2011
TIME PLOTTED => 09:51

Dist	COUNTY	ROUTE	POST MILES TOTAL PROJECT	SHEET No.	TOTAL SHEETS
02	Sis	5	R19/R25.3	13	149

REGISTERED CIVIL ENGINEER DATE 05-27-11

05-27-11
PLANS APPROVAL DATE

REGISTERED PROFESSIONAL ENGINEER
APOLINARIO W. VIVIT
No. C66046
Exp. 06-30-12
CIVIL
STATE OF CALIFORNIA

THE STATE OF CALIFORNIA OR ITS OFFICERS OR AGENTS SHALL NOT BE RESPONSIBLE FOR THE ACCURACY OR COMPLETENESS OF SCANNED COPIES OF THIS PLAN SHEET.

NOTES:

1. FOR ACCURATE RIGHT OF WAY DATA, CONTACT RIGHT OF WAY ENGINEERING AT THE DISTRICT OFFICE.
2. EXISTING UTILITY FACILITIES HAVE NOT BEEN POSITIVELY IDENTIFIED.

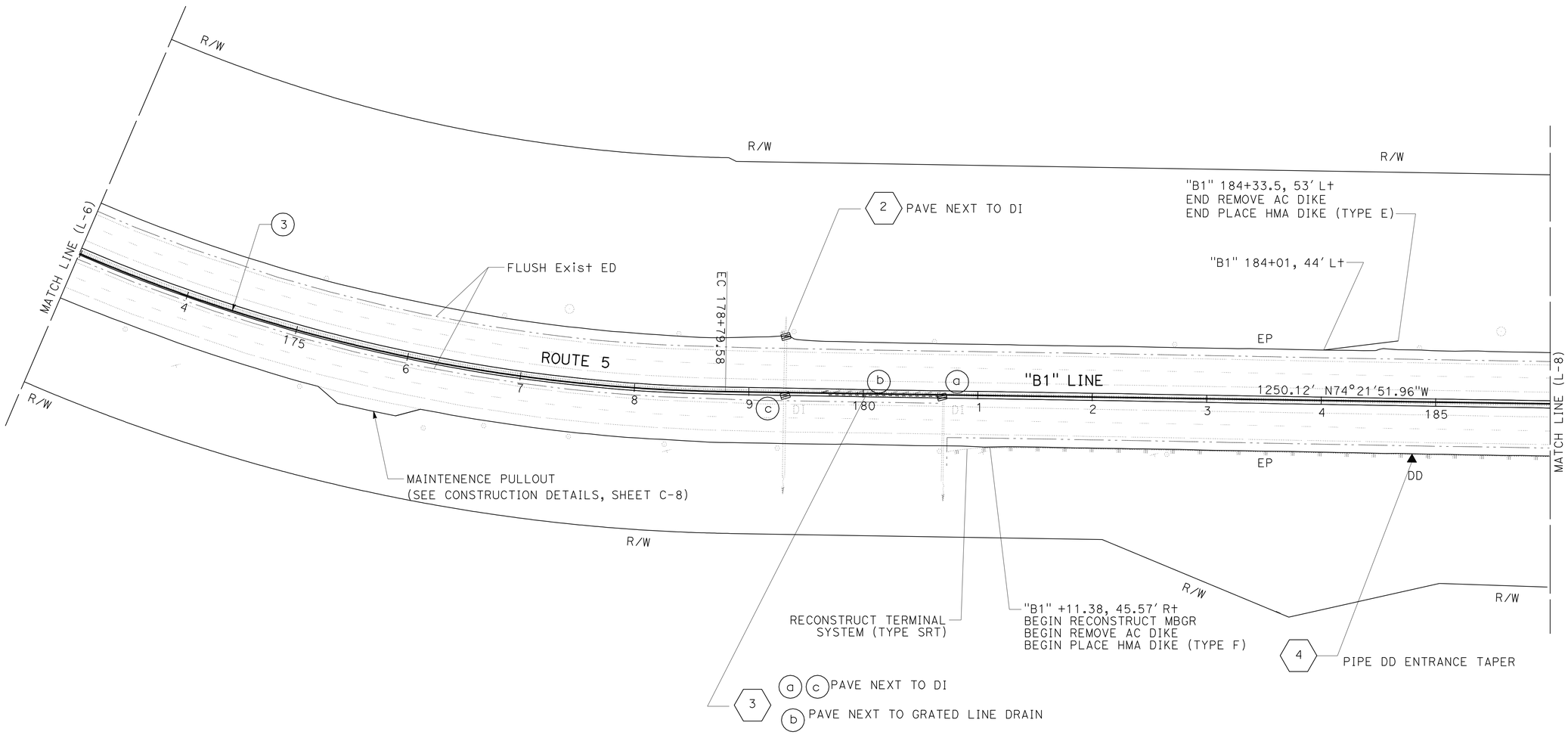

LAYOUT

SCALE: 1" = 50'

L-7

REVISED BY	DATE REVISED
BRIAN STEINER	APOLINARIO VIVIT
CALCULATED-DESIGNED BY	CHECKED BY
FUNCTIONAL SUPERVISOR	APOLINARIO VIVIT

STATE OF CALIFORNIA - DEPARTMENT OF TRANSPORTATION
Caltrans
DESIGN

P:\proj1\02\3E750_plans\pse\23e750ea007.dgn

LAST REVISION 05-27-11 | DATE PLOTTED => 01-JUN-2011 | TIME PLOTTED => 09:51

Dist	COUNTY	ROUTE	POST MILES TOTAL PROJECT	SHEET No.	TOTAL SHEETS
02	Sis	5	R19/R25.3	14	149

REGISTERED CIVIL ENGINEER DATE 05-27-11

PLANS APPROVAL DATE 05-27-11

REGISTERED PROFESSIONAL ENGINEER APOLINARIO W. VIVIT No. C66046 Exp. 06-30-12 CIVIL STATE OF CALIFORNIA

THE STATE OF CALIFORNIA OR ITS OFFICERS OR AGENTS SHALL NOT BE RESPONSIBLE FOR THE ACCURACY OR COMPLETENESS OF SCANNED COPIES OF THIS PLAN SHEET.

NOTES:

1. FOR ACCURATE RIGHT OF WAY DATA, CONTACT RIGHT OF WAY ENGINEERING AT THE DISTRICT OFFICE.
2. EXISTING UTILITY FACILITIES HAVE NOT BEEN POSITIVELY IDENTIFIED.

CURVE DATA

No. ⊕	R	Δ	T	L
4	1412′	27°35′12"	346.65′	679.85′

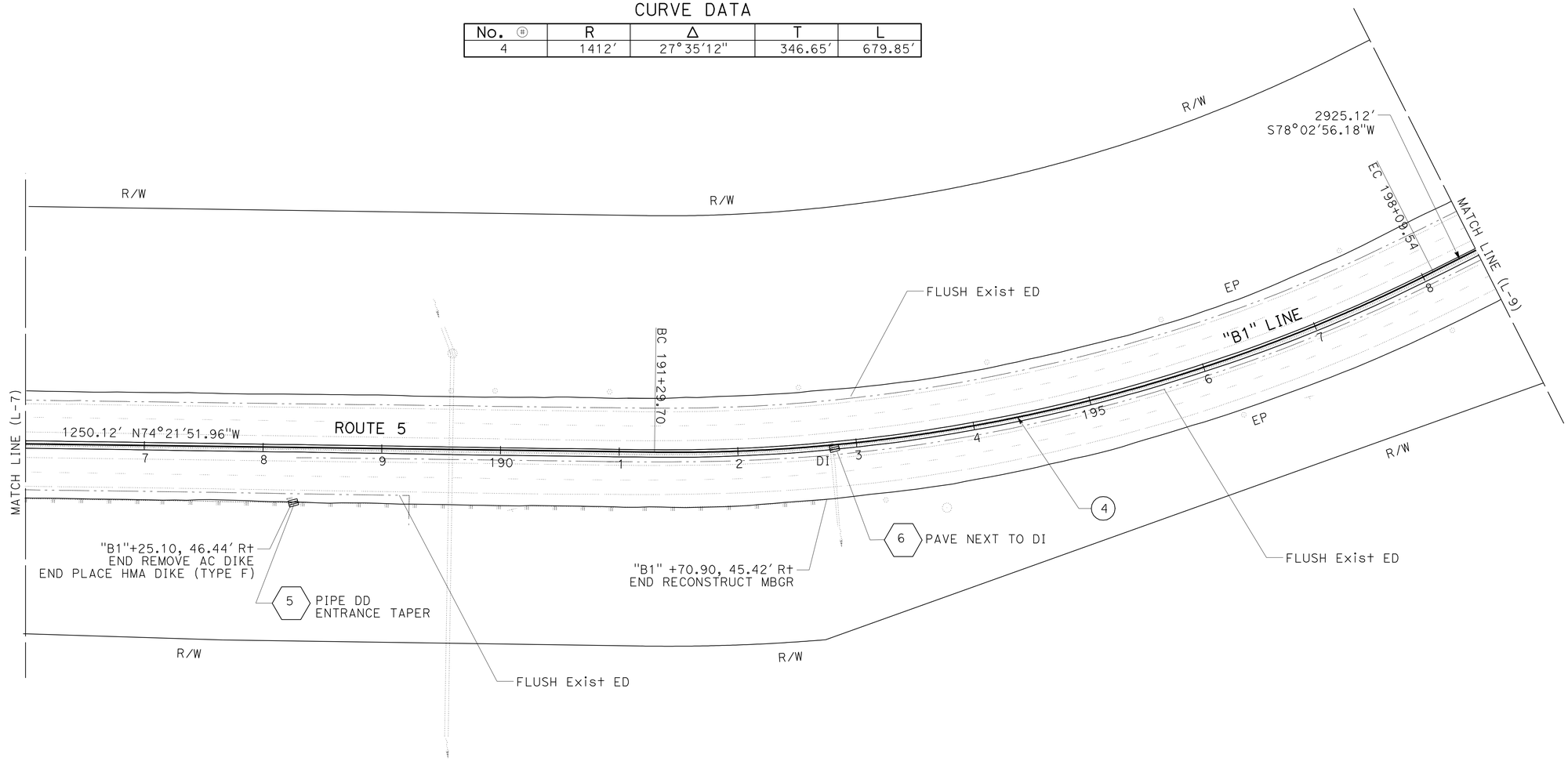

LAYOUT

SCALE: 1" = 50′

L-8

REVISED BY	DATE REVISED

CALCULATED-DESIGNED BY	CHECKED BY
BRIAN STEINER	APOLINARIO VIVIT

FUNCTIONAL SUPERVISOR: APOLINARIO VIVIT

STATE OF CALIFORNIA - DEPARTMENT OF TRANSPORTATION

Caltrans® **DESIGN**

P:\proj\02\3E750_plans\pse\23e750ea008.dgn

LAST REVISION 05-27-11 | DATE PLOTTED => 01-JUN-2011 | TIME PLOTTED => 09:51

Dist	COUNTY	ROUTE	POST MILES TOTAL PROJECT	SHEET No.	TOTAL SHEETS
02	Sis	5	R19/R25.3	15	149

REGISTERED CIVIL ENGINEER 05-27-11 DATE

05-27-11
PLANS APPROVAL DATE

REGISTERED PROFESSIONAL ENGINEER APOLINARIO W. VIVIT No. C66046 Exp. 06-30-12 CIVIL STATE OF CALIFORNIA

THE STATE OF CALIFORNIA OR ITS OFFICERS OR AGENTS SHALL NOT BE RESPONSIBLE FOR THE ACCURACY OR COMPLETENESS OF SCANNED COPIES OF THIS PLAN SHEET.

NOTES:

1. FOR ACCURATE RIGHT OF WAY DATA, CONTACT RIGHT OF WAY ENGINEERING AT THE DISTRICT OFFICE.
2. EXISTING UTILITY FACILITIES HAVE NOT BEEN POSITIVELY IDENTIFIED.

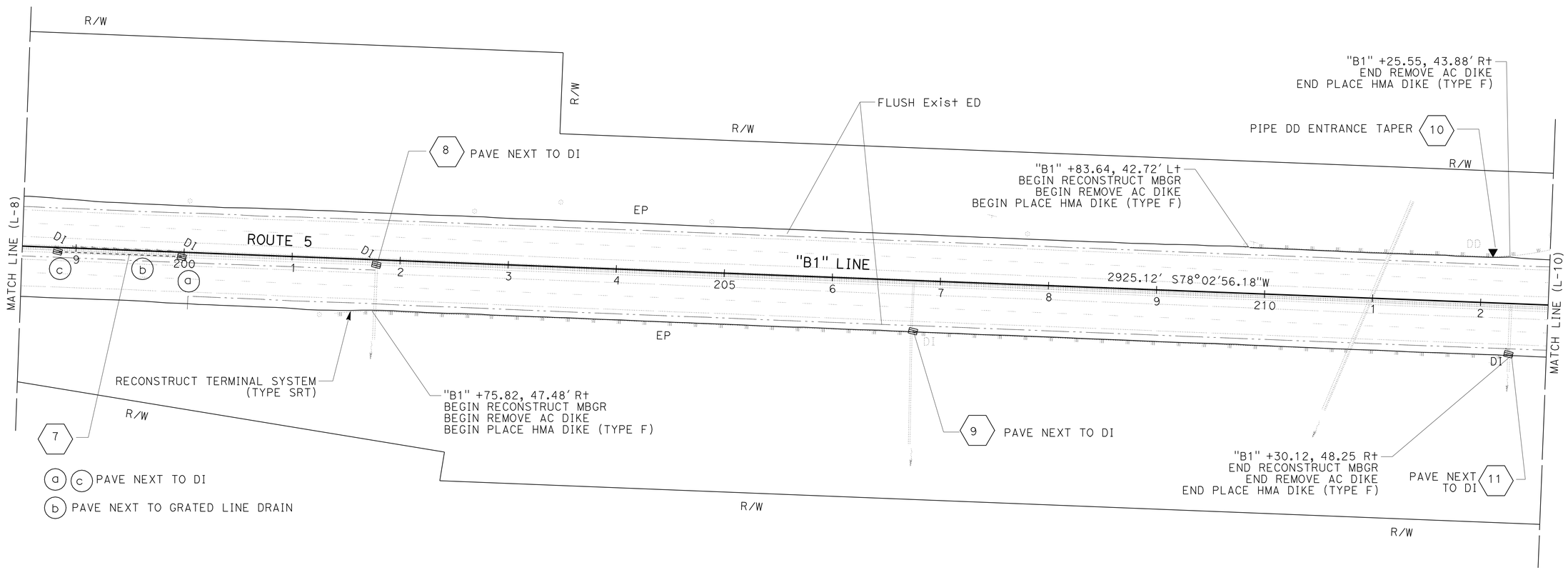

LAYOUT

SCALE: 1" = 50'

L-9

REVISED BY | DATE REVISED
BRIAN STEINER | APOLINARIO VIVIT
CALCULATED-DESIGNED BY | CHECKED BY
FUNCTIONAL SUPERVISOR
APOLINARIO VIVIT

STATE OF CALIFORNIA - DEPARTMENT OF TRANSPORTATION
Caltrans
DESIGN

P:\proj\02\3E750_plans\pse\23e750ea009.dgn

LAST REVISION 05-27-11 | DATE PLOTTED => 01-JUN-2011 | TIME PLOTTED => 09:51

BORDER LAST REVISED 7/2/2010 | USERNAME => s115152 | DGN FILE => 23e750ea009.dgn | RELATIVE BORDER SCALE IS IN INCHES 0 1 2 3 | UNIT 0317 | PROJECT NUMBER & PHASE 02000201611

Dist	COUNTY	ROUTE	POST MILES TOTAL PROJECT	SHEET No.	TOTAL SHEETS
02	Sis	5	R19/R25.3	16	149

REGISTERED CIVIL ENGINEER DATE 05-27-11

05-27-11
PLANS APPROVAL DATE

REGISTERED PROFESSIONAL ENGINEER
APOLINARIO W. VIVIT
No. C66046
Exp. 06-30-12
CIVIL
STATE OF CALIFORNIA

THE STATE OF CALIFORNIA OR ITS OFFICERS OR AGENTS SHALL NOT BE RESPONSIBLE FOR THE ACCURACY OR COMPLETENESS OF SCANNED COPIES OF THIS PLAN SHEET.

NOTES:

1. FOR ACCURATE RIGHT OF WAY DATA, CONTACT RIGHT OF WAY ENGINEERING AT THE DISTRICT OFFICE.
2. EXISTING UTILITY FACILITIES HAVE NOT BEEN POSITIVELY IDENTIFIED.

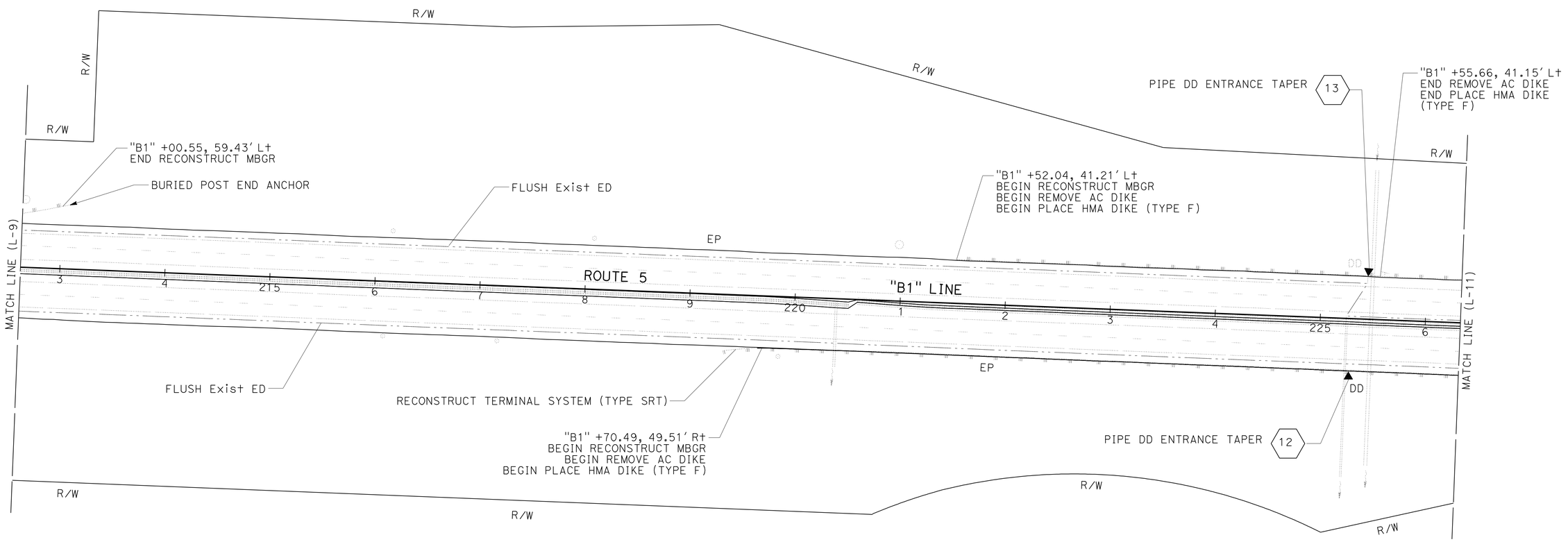

LAYOUT

SCALE: 1" = 50'

L-10

REVISED BY	DATE REVISED
BRIAN STEINER	APOLINARIO VIVIT
CALCULATED-DESIGNED BY	CHECKED BY
FUNCTIONAL SUPERVISOR	APOLINARIO VIVIT

STATE OF CALIFORNIA - DEPARTMENT OF TRANSPORTATION
Caltrans
DESIGN

P:\proj1\02\3E750_plans\pse\23e750ea010.dgn

LAST REVISION 05-27-11 | DATE PLOTTED => 01-JUN-2011 | TIME PLOTTED => 09:51

Dist	COUNTY	ROUTE	POST MILES TOTAL PROJECT	SHEET No.	TOTAL SHEETS
02	Sis	5	R19/R25.3	17	149

REGISTERED CIVIL ENGINEER 05-27-11 DATE

05-27-11
PLANS APPROVAL DATE

REGISTERED PROFESSIONAL ENGINEER
APOLINARIO W. VIVIT
No. C66046
Exp. 06-30-12
CIVIL
STATE OF CALIFORNIA

THE STATE OF CALIFORNIA OR ITS OFFICERS OR AGENTS SHALL NOT BE RESPONSIBLE FOR THE ACCURACY OR COMPLETENESS OF SCANNED COPIES OF THIS PLAN SHEET.

NOTES:

1. FOR ACCURATE RIGHT OF WAY DATA, CONTACT RIGHT OF WAY ENGINEERING AT THE DISTRICT OFFICE.
2. EXISTING UTILITY FACILITIES HAVE NOT BEEN POSITIVELY IDENTIFIED.

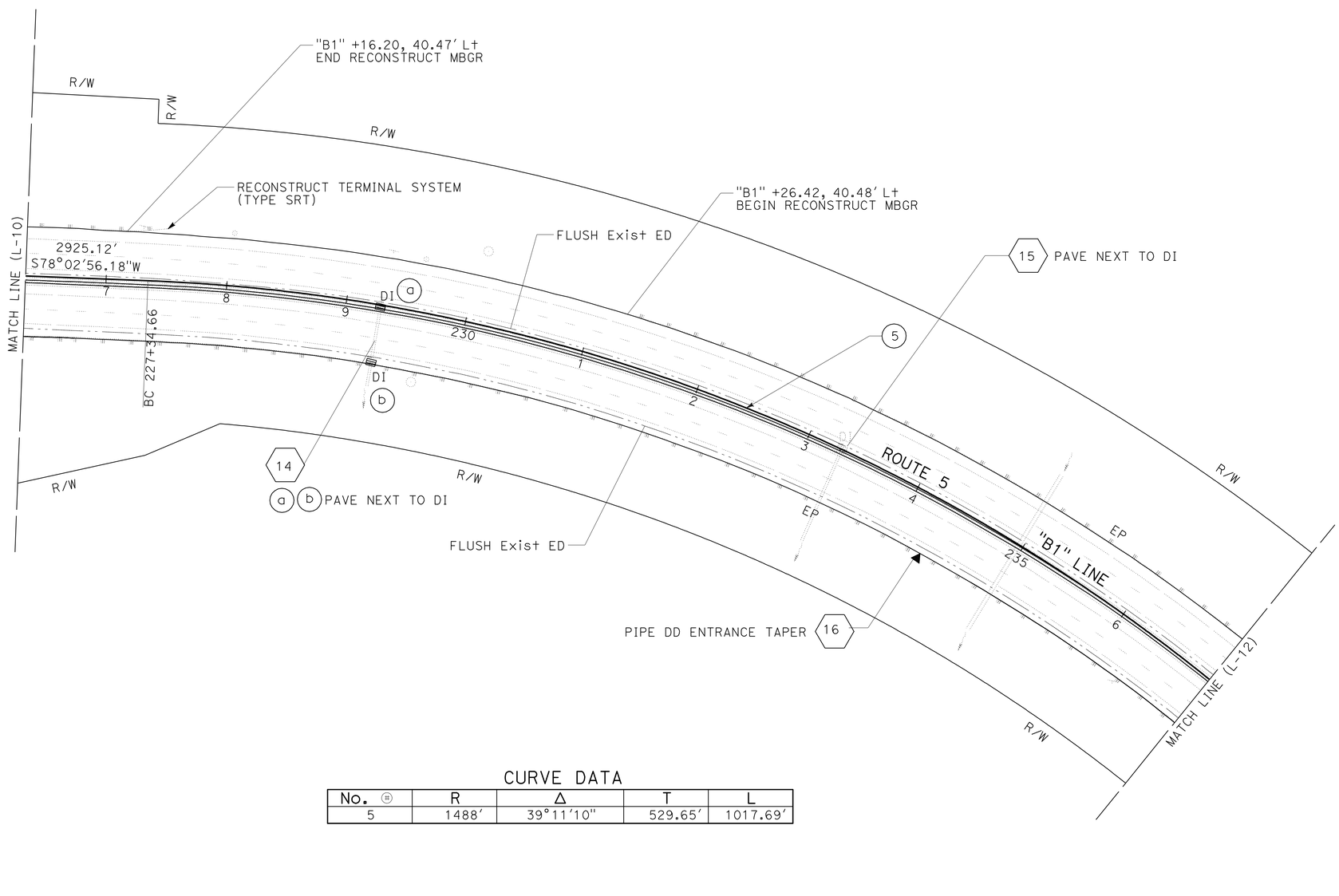

CURVE DATA

No. Ⓗ	R	Δ	T	L
5	1488'	39°11'10"	529.65'	1017.69'

LAYOUT

SCALE: 1" = 50'

L-11

BRIAN STEINER | APOLINARIO VIVIT | CALCULATED-DESIGNED BY | CHECKED BY | FUNCTIONAL SUPERVISOR: APOLINARIO VIVIT | REVISED BY | DATE REVISED

STATE OF CALIFORNIA - DEPARTMENT OF TRANSPORTATION
Caltrans
DESIGN

P:\proj1\02\3E750_plans\pse\23e750ea011.dgn

LAST REVISION 05-27-11 | DATE PLOTTED => 01-JUN-2011 | TIME PLOTTED => 09:51

Dist	COUNTY	ROUTE	POST MILES TOTAL PROJECT	SHEET No.	TOTAL SHEETS
02	Sis	5	R19/R25.3	18	149

REGISTERED CIVIL ENGINEER 05-27-11 DATE

05-27-11
PLANS APPROVAL DATE

REGISTERED PROFESSIONAL ENGINEER
APOLINARIO W. VIVIT
No. C66046
Exp. 06-30-12
CIVIL
STATE OF CALIFORNIA

THE STATE OF CALIFORNIA OR ITS OFFICERS OR AGENTS SHALL NOT BE RESPONSIBLE FOR THE ACCURACY OR COMPLETENESS OF SCANNED COPIES OF THIS PLAN SHEET.

NOTES:

1. FOR ACCURATE RIGHT OF WAY DATA, CONTACT RIGHT OF WAY ENGINEERING AT THE DISTRICT OFFICE.
2. EXISTING UTILITY FACILITIES HAVE NOT BEEN POSITIVELY IDENTIFIED.

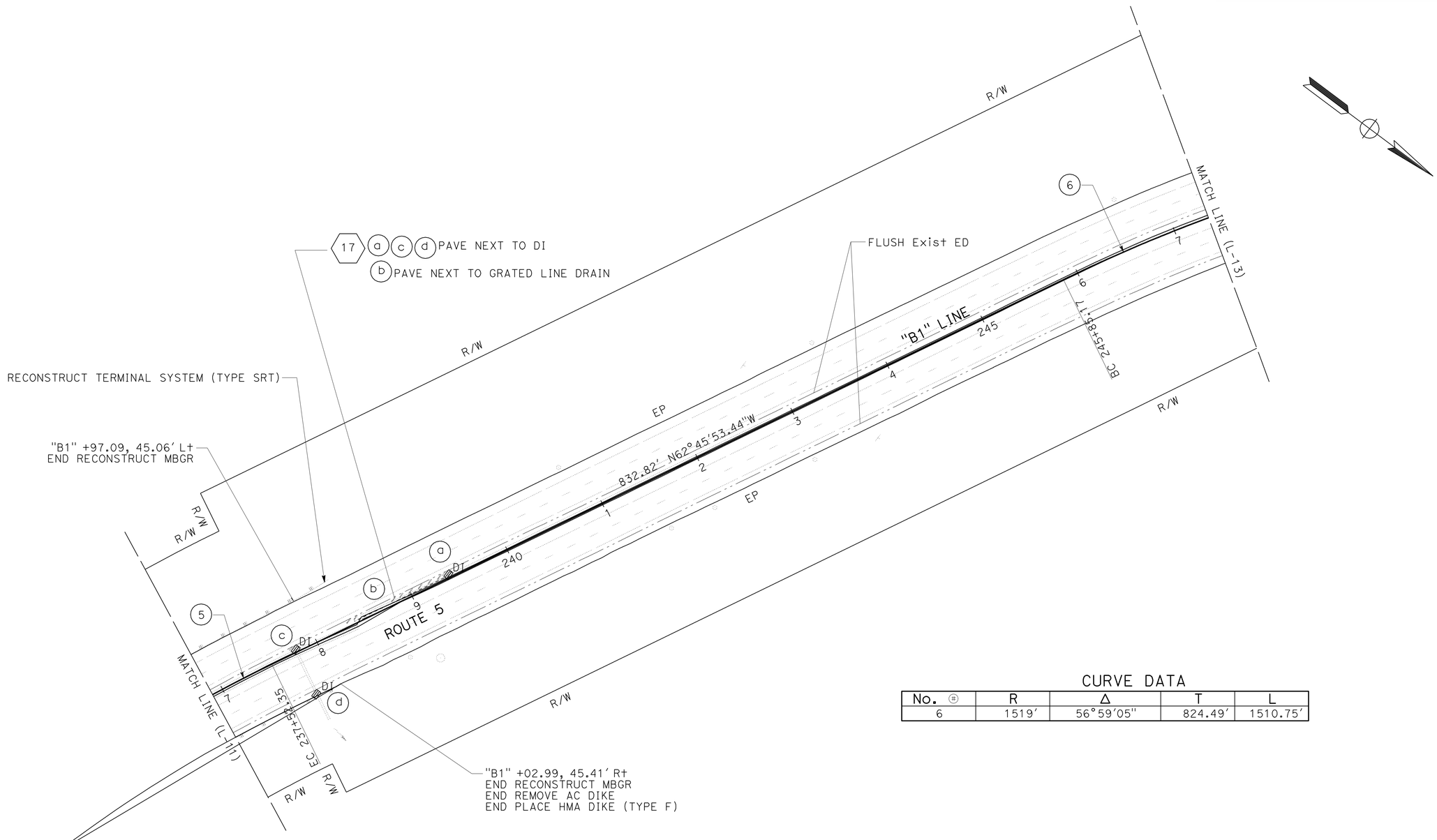

CURVE DATA

No. ⊕	R	Δ	T	L
6	1519'	56°59'05"	824.49'	1510.75'

LAYOUT

SCALE: 1" = 50'

L-12

REVISED BY | DATE REVISED
BRIAN STEINER | APOLINARIO VIVIT
CALCULATED-DESIGNED BY | CHECKED BY
FUNCTIONAL SUPERVISOR: APOLINARIO VIVIT

STATE OF CALIFORNIA - DEPARTMENT OF TRANSPORTATION
Caltrans
DESIGN

P:\proj1\02\3E750_plans\pse\23e750ea012.dgn

LAST REVISION 05-27-11 | DATE PLOTTED => 01-JUN-2011 | TIME PLOTTED => 09:51

Dist	COUNTY	ROUTE	POST MILES TOTAL PROJECT	SHEET No.	TOTAL SHEETS
02	Sis	5	R19/R25.3	19	149

REGISTERED CIVIL ENGINEER DATE 05-27-11

05-27-11
PLANS APPROVAL DATE

REGISTERED PROFESSIONAL ENGINEER
APOLINARIO W. VIVIT
No. C66046
Exp. 06-30-12
CIVIL
STATE OF CALIFORNIA

THE STATE OF CALIFORNIA OR ITS OFFICERS OR AGENTS SHALL NOT BE RESPONSIBLE FOR THE ACCURACY OR COMPLETENESS OF SCANNED COPIES OF THIS PLAN SHEET.

NOTES:

1. FOR ACCURATE RIGHT OF WAY DATA, CONTACT RIGHT OF WAY ENGINEERING AT THE DISTRICT OFFICE.
2. EXISTING UTILITY FACILITIES HAVE NOT BEEN POSITIVELY IDENTIFIED.

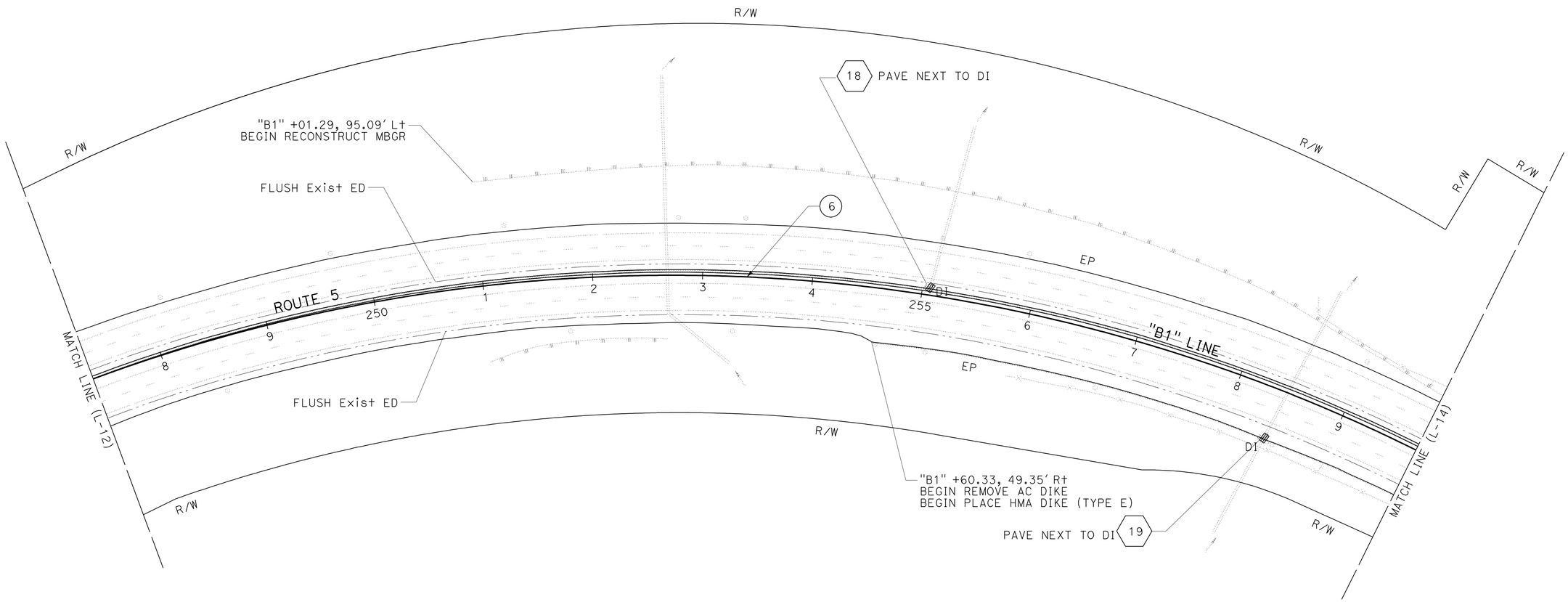

LAYOUT

SCALE: 1" = 50'

L-13

REVISED BY	DATE REVISED

CALCULATED-DESIGNED BY	CHECKED BY
BRIAN STEINER	APOLINARIO VIVIT

FUNCTIONAL SUPERVISOR: APOLINARIO VIVIT

STATE OF CALIFORNIA - DEPARTMENT OF TRANSPORTATION
Caltrans
DESIGN

P:\proj1\02\3E750_plans\pse\23e750ea013.dgn

LAST REVISION 05-27-11 | DATE PLOTTED => 01-JUN-2011 | TIME PLOTTED => 09:52

Dist	COUNTY	ROUTE	POST MILES TOTAL PROJECT	SHEET No.	TOTAL SHEETS
02	Sis	5	R19/R25.3	20	149

REGISTERED CIVIL ENGINEER DATE 05-27-11

PLANS APPROVAL DATE 05-27-11

REGISTERED PROFESSIONAL ENGINEER APOLINARIO W. VIVIT No. C66046 Exp. 06-30-12 CIVIL STATE OF CALIFORNIA

THE STATE OF CALIFORNIA OR ITS OFFICERS OR AGENTS SHALL NOT BE RESPONSIBLE FOR THE ACCURACY OR COMPLETENESS OF SCANNED COPIES OF THIS PLAN SHEET.

NOTES:

1. FOR ACCURATE RIGHT OF WAY DATA, CONTACT RIGHT OF WAY ENGINEERING AT THE DISTRICT OFFICE.
2. EXISTING UTILITY FACILITIES HAVE NOT BEEN POSITIVELY IDENTIFIED.

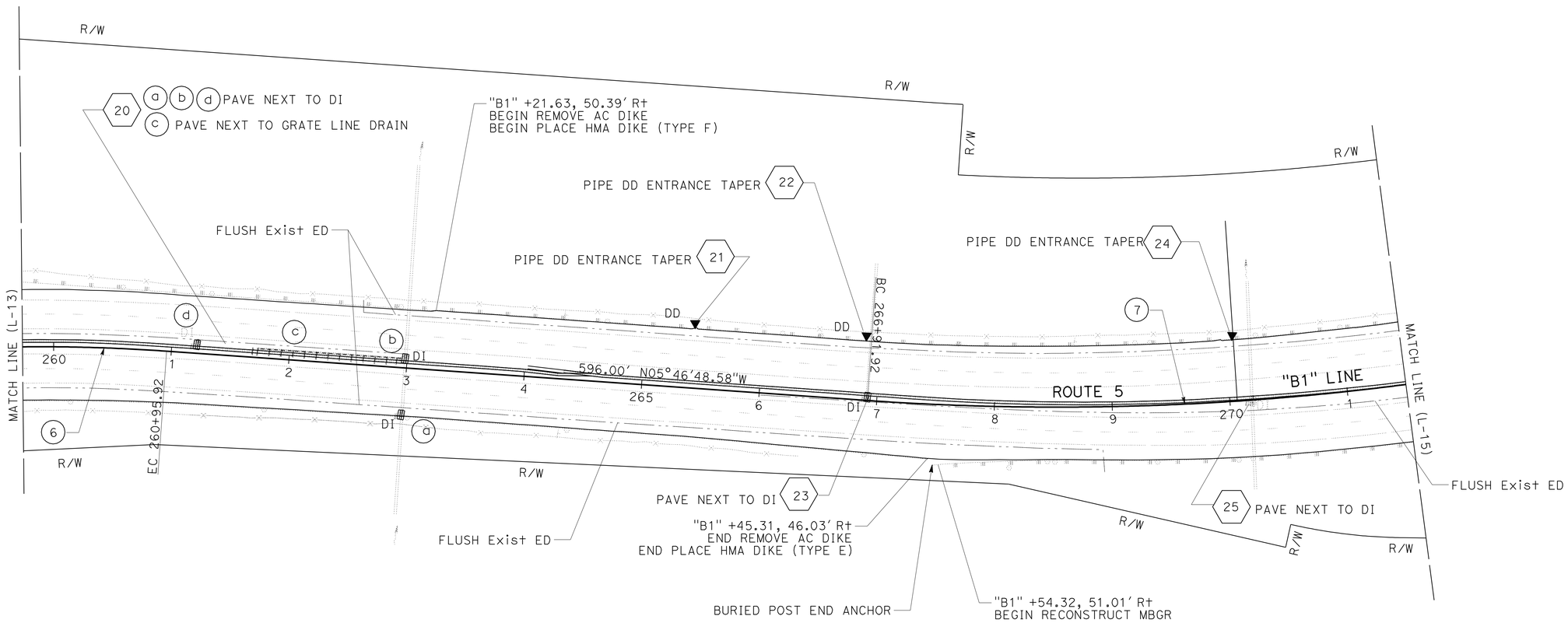

CURVE DATA

No. ⊕	R	Δ	T	L
7	2290'	33°30'00"	689.21'	1338.93'

LAYOUT

SCALE: 1" = 50'

L-14

REVISED BY | DATE REVISED

BRIAN STEINER | APOLINARIO VIVIT

CALCULATED-DESIGNED BY | CHECKED BY

FUNCTIONAL SUPERVISOR: APOLINARIO VIVIT

STATE OF CALIFORNIA - DEPARTMENT OF TRANSPORTATION

Caltrans® DESIGN

P:\proj1\02\3E750_plans\pse\23e750ea014.dgn

LAST REVISION 05-27-11 | DATE PLOTTED => 01-JUN-2011 | TIME PLOTTED => 09:52

Dist	COUNTY	ROUTE	POST MILES TOTAL PROJECT	SHEET No.	TOTAL SHEETS
02	Sis	5	R19/R25.3	21	149

REGISTERED CIVIL ENGINEER DATE 05-27-11

05-27-11
PLANS APPROVAL DATE

REGISTERED PROFESSIONAL ENGINEER
APOLINARIO W. VIVIT
No. C66046
Exp. 06-30-12
CIVIL
STATE OF CALIFORNIA

THE STATE OF CALIFORNIA OR ITS OFFICERS OR AGENTS SHALL NOT BE RESPONSIBLE FOR THE ACCURACY OR COMPLETENESS OF SCANNED COPIES OF THIS PLAN SHEET.

NOTES:

1. FOR ACCURATE RIGHT OF WAY DATA, CONTACT RIGHT OF WAY ENGINEERING AT THE DISTRICT OFFICE.
2. EXISTING UTILITY FACILITIES HAVE NOT BEEN POSITIVELY IDENTIFIED.

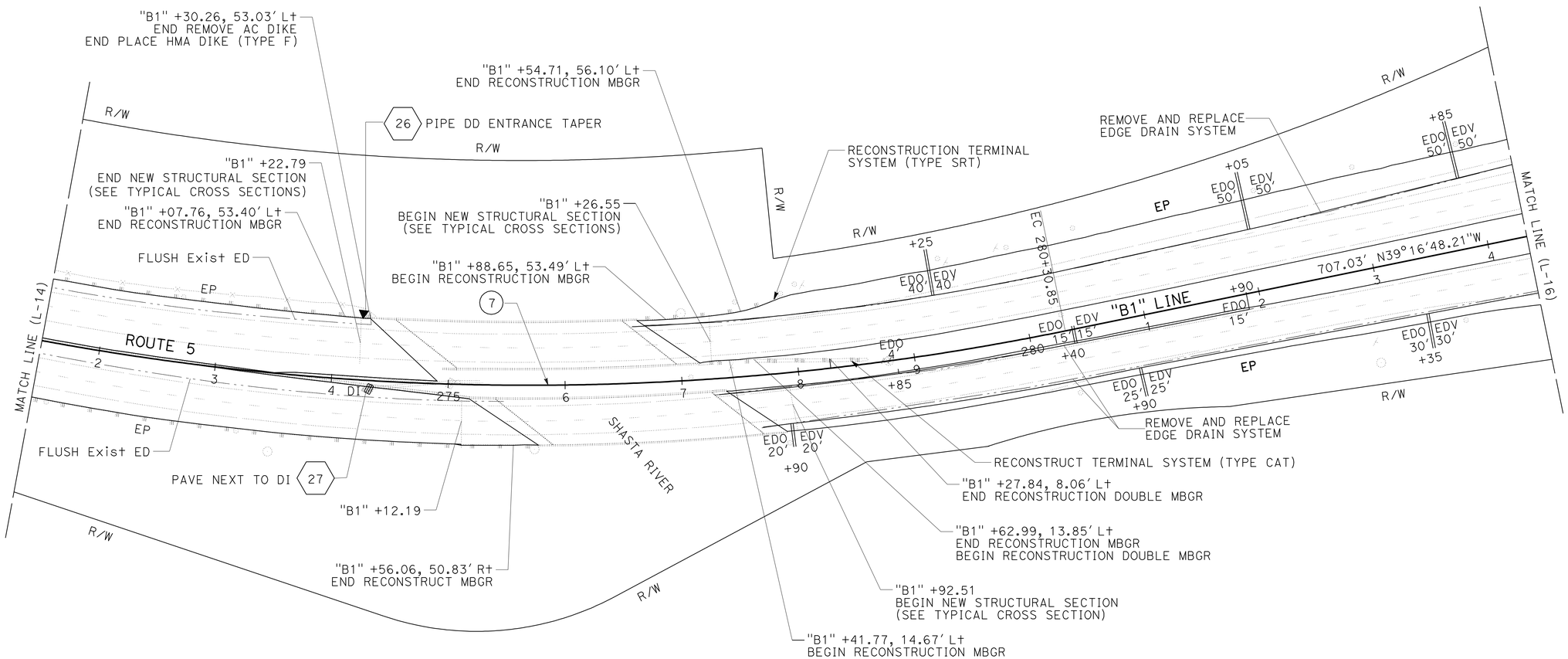

LAYOUT

SCALE: 1" = 50'

L-15

REVISED BY	DATE REVISED
BRIAN STEINER	APOLINARIO VIVIT
CALCULATED-DESIGNED BY	CHECKED BY
FUNCTIONAL SUPERVISOR	APOLINARIO VIVIT

STATE OF CALIFORNIA - DEPARTMENT OF TRANSPORTATION

Caltrans®

DESIGN

P:\proj1\02\3E750_plans\pse\23e750ea015.dgn

LAST REVISION 05-27-11 | DATE PLOTTED => 01-JUN-2011 | TIME PLOTTED => 09:52

Dist	COUNTY	ROUTE	POST MILES TOTAL PROJECT	SHEET No.	TOTAL SHEETS
02	Sis	5	R19/R25.3	22	149

REGISTERED CIVIL ENGINEER 05-27-11 DATE

05-27-11
PLANS APPROVAL DATE

REGISTERED PROFESSIONAL ENGINEER APOLINARIO W. VIVIT No. C66046 Exp. 06-30-12 CIVIL STATE OF CALIFORNIA

THE STATE OF CALIFORNIA OR ITS OFFICERS OR AGENTS SHALL NOT BE RESPONSIBLE FOR THE ACCURACY OR COMPLETENESS OF SCANNED COPIES OF THIS PLAN SHEET.

NOTES:

1. FOR ACCURATE RIGHT OF WAY DATA, CONTACT RIGHT OF WAY ENGINEERING AT THE DISTRICT OFFICE.
2. EXISTING UTILITY FACILITIES HAVE NOT BEEN POSITIVELY IDENTIFIED.
3. FOR ANCHOR BLOCK DETAILS SEE CONSTRUCTION DETAIL, SHEET C-6.
4. EXACT LOCATION TO BE DETERMINED BY THE ENGINEER.

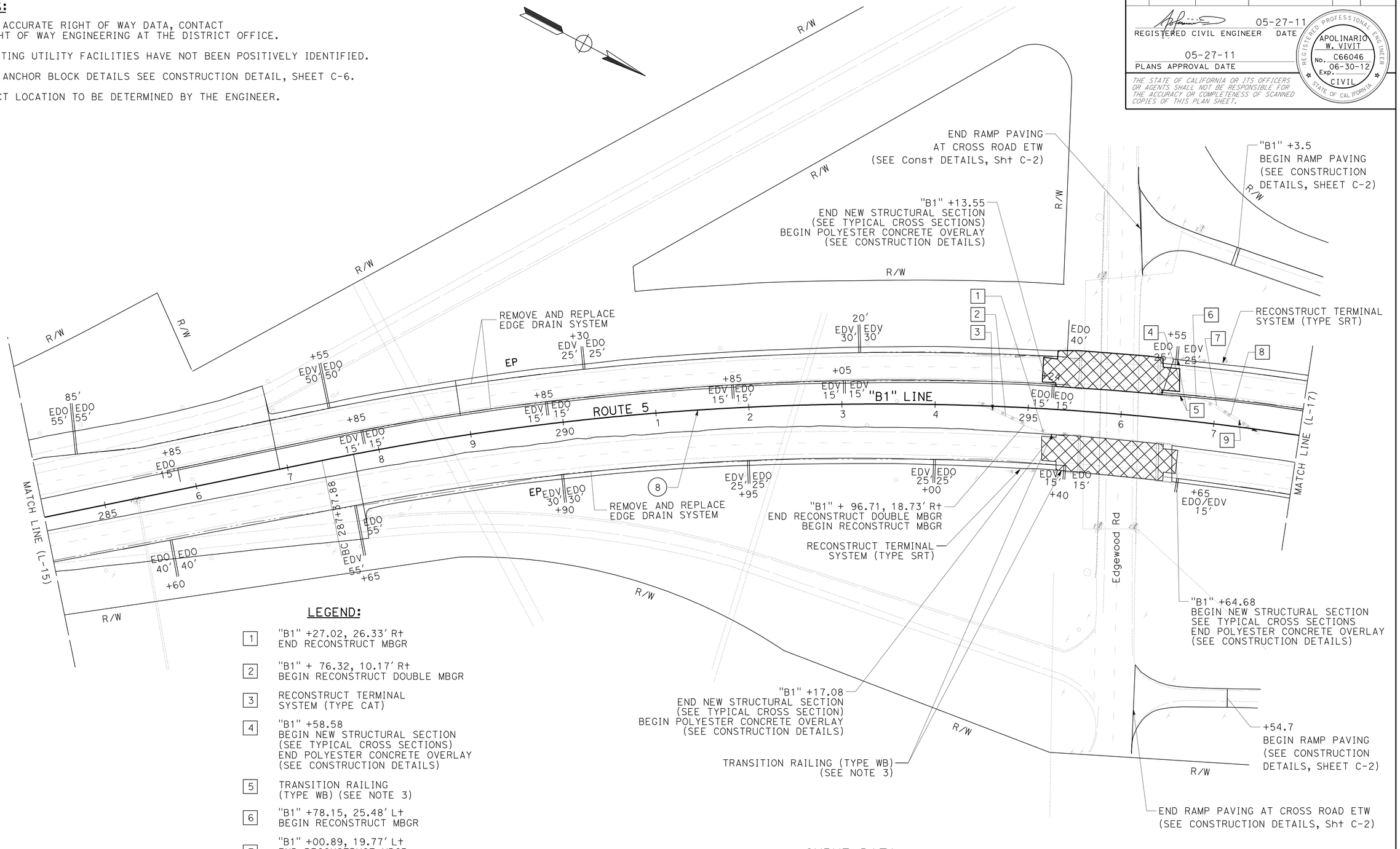

LEGEND:

1. "B1" +27.02, 26.33' Rt
   END RECONSTRUCT MBGR
2. "B1" + 76.32, 10.17' Rt
   BEGIN RECONSTRUCT DOUBLE MBGR
3. RECONSTRUCT TERMINAL
   SYSTEM (TYPE CAT)
4. "B1" +58.58
   BEGIN NEW STRUCTURAL SECTION
   (SEE TYPICAL CROSS SECTIONS)
   END POLYESTER CONCRETE OVERLAY
   (SEE CONSTRUCTION DETAILS)
5. TRANSITION RAILING
   (TYPE WB) (SEE NOTE 3)
6. "B1" +78.15, 25.48' Lt
   BEGIN RECONSTRUCT MBGR
7. "B1" +00.89, 19.77' Lt
   END RECONSTRUCT MBGR
   BEGIN RECONSTRUCT DOUBLE MBGR
8. "B1" +17.11, 12.28' Lt
   END RECONSTRUCT DOUBLE MBGR
9. RECONSTRUCT TERMINAL SYSTEM (TYPE CAT)

CURVE DATA

No. ⑧	R	Δ	T	L
8	2996'	26°25'43"	703.50'	1381.96'

LAYOUT

SCALE: 1" = 50'

L-16

REVISED BY	DATE REVISED
BRIAN STEINER	APOLINARIO VIVIT

CALCULATED-DESIGNED BY / CHECKED BY

FUNCTIONAL SUPERVISOR: APOLINARIO VIVIT

STATE OF CALIFORNIA - DEPARTMENT OF TRANSPORTATION

Caltrans® DESIGN

P:\proj1\02\3E750_plans\pse\23e750ea016.dgn

LAST REVISION 05-27-11 | DATE PLOTTED => 01-JUN-2011 | TIME PLOTTED => 09:52

Dist	COUNTY	ROUTE	POST MILES TOTAL PROJECT	SHEET No.	TOTAL SHEETS
02	Sis	5	R19/R25.3	23	149

REGISTERED CIVIL ENGINEER DATE 05-27-11

PLANS APPROVAL DATE 05-27-11

REGISTERED PROFESSIONAL ENGINEER APOLINARIO W. VIVIT No. C66046 Exp. 06-30-12 CIVIL STATE OF CALIFORNIA

THE STATE OF CALIFORNIA OR ITS OFFICERS OR AGENTS SHALL NOT BE RESPONSIBLE FOR THE ACCURACY OR COMPLETENESS OF SCANNED COPIES OF THIS PLAN SHEET.

NOTES:

1. FOR ACCURATE RIGHT OF WAY DATA, CONTACT RIGHT OF WAY ENGINEERING AT THE DISTRICT OFFICE.
2. EXISTING UTILITY FACILITIES HAVE NOT BEEN POSITIVELY IDENTIFIED.

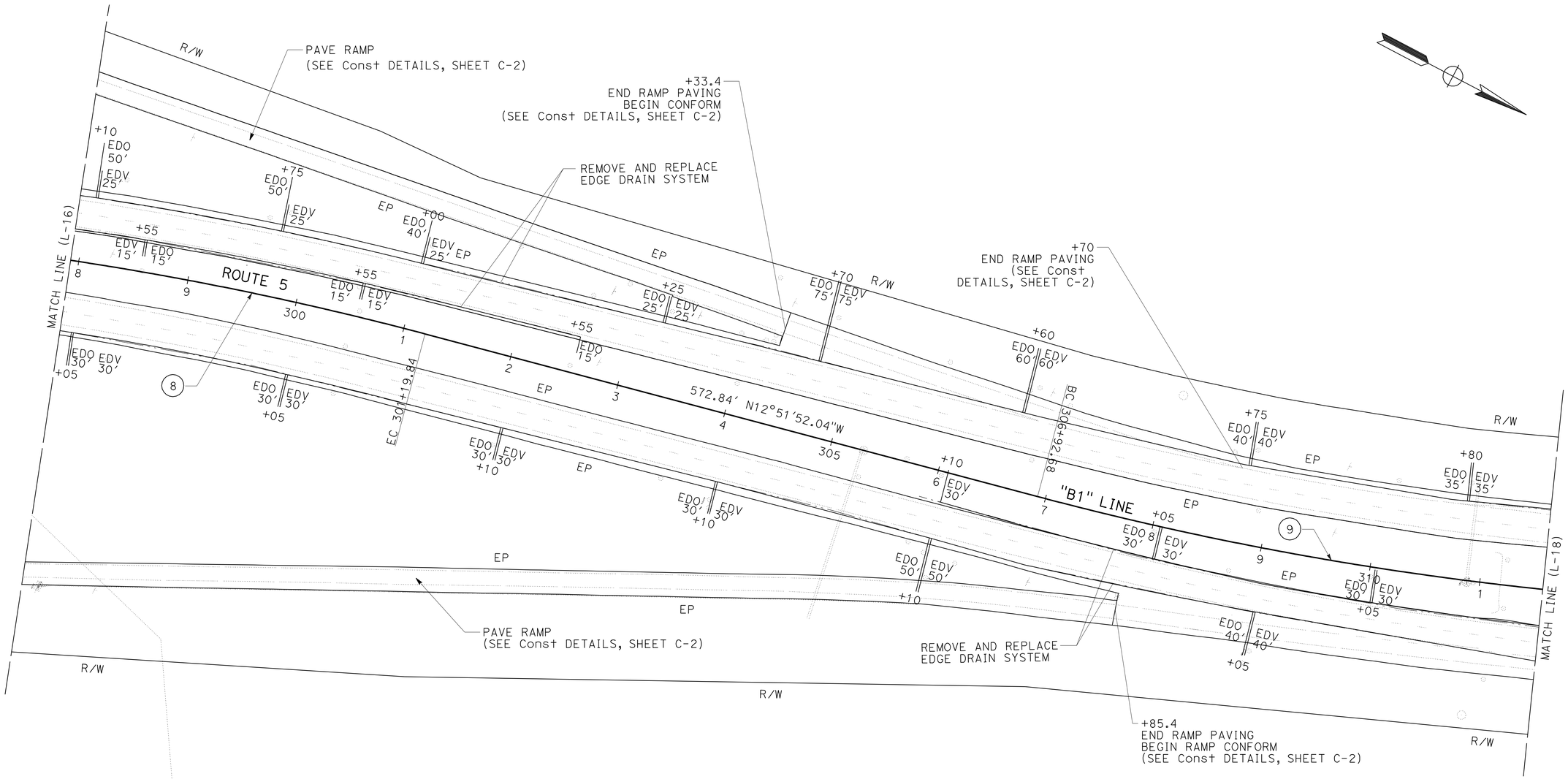

CURVE DATA

No. ⊕	R	Δ	T	L
9	2981'	33°28'51"	896.64'	1741.95'

LAYOUT

SCALE: 1" = 50'

L-17

REVISED BY	DATE REVISED	BRIAN STEINER	APOLINARIO VIVIT	CALCULATED-DESIGNED BY	CHECKED BY	FUNCTIONAL SUPERVISOR	APOLINARIO VIVIT

STATE OF CALIFORNIA - DEPARTMENT OF TRANSPORTATION

Caltrans® DESIGN

P:\proj\02\3E750_plans\pse\23e750ea017.dgn

LAST REVISION 05-27-11 | DATE PLOTTED => 01-JUN-2011 | TIME PLOTTED => 09:52

Dist	COUNTY	ROUTE	POST MILES TOTAL PROJECT	SHEET No.	TOTAL SHEETS
02	Sis	5	R19/R25.3	24	149

REGISTERED CIVIL ENGINEER DATE 05-27-11

05-27-11
PLANS APPROVAL DATE

REGISTERED PROFESSIONAL ENGINEER
APOLINARIO W. VIVIT
No. C66046
Exp. 06-30-12
CIVIL
STATE OF CALIFORNIA

THE STATE OF CALIFORNIA OR ITS OFFICERS OR AGENTS SHALL NOT BE RESPONSIBLE FOR THE ACCURACY OR COMPLETENESS OF SCANNED COPIES OF THIS PLAN SHEET.

NOTES:

1. FOR ACCURATE RIGHT OF WAY DATA, CONTACT RIGHT OF WAY ENGINEERING AT THE DISTRICT OFFICE.
2. EXISTING UTILITY FACILITIES HAVE NOT BEEN POSITIVELY IDENTIFIED.

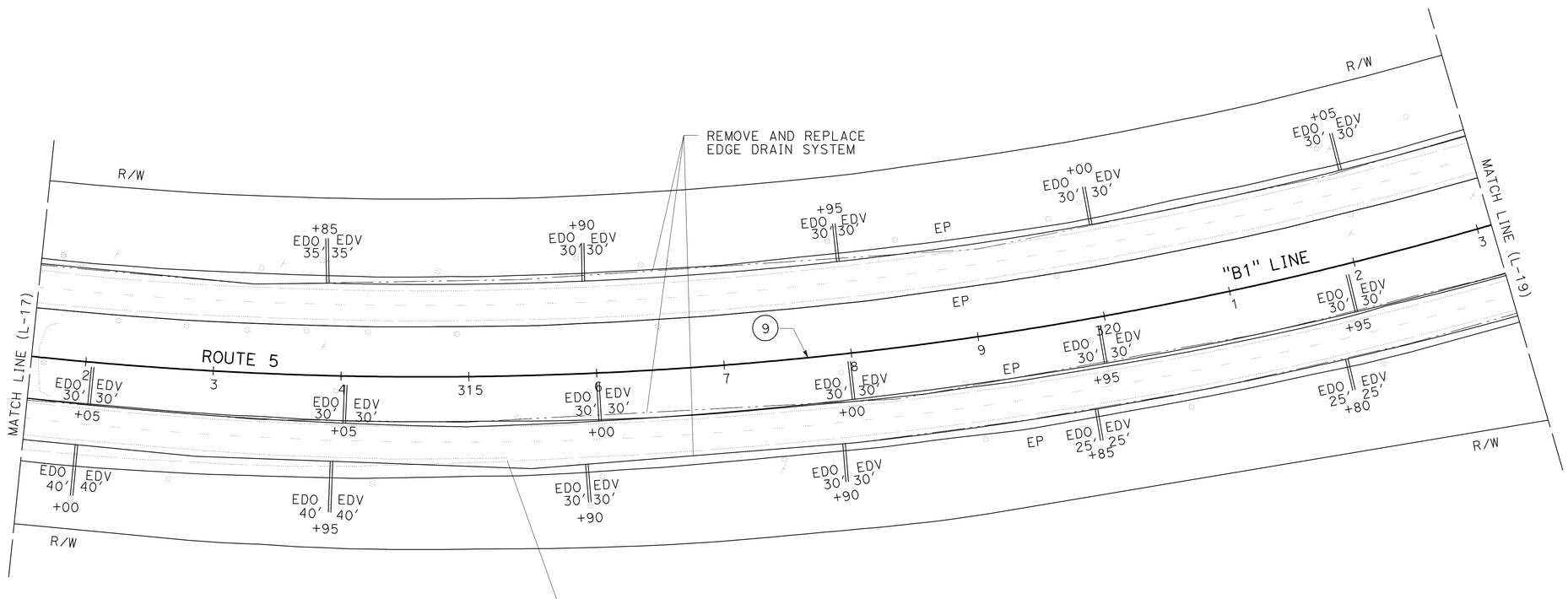

LAYOUT

SCALE: 1" = 50'

L-18

REVISED BY	DATE REVISED
BRIAN STEINER	APOLINARIO VIVIT

CALCULATED-DESIGNED BY
CHECKED BY

FUNCTIONAL SUPERVISOR
APOLINARIO VIVIT

STATE OF CALIFORNIA - DEPARTMENT OF TRANSPORTATION
Caltrans
DESIGN

P:\proj1\02\3E750_plans\pse\23e750ea018.dgn

LAST REVISION 05-27-11
DATE PLOTTED => 01-JUN-2011
TIME PLOTTED => 09:52

Dist	COUNTY	ROUTE	POST MILES TOTAL PROJECT	SHEET No.	TOTAL SHEETS
02	Sis	5	R19/R25.3	25	149

REGISTERED CIVIL ENGINEER DATE 05-27-11

PLANS APPROVAL DATE 05-27-11

REGISTERED PROFESSIONAL ENGINEER APOLINARIO W. VIVIT No. C66046 Exp. 06-30-12 CIVIL STATE OF CALIFORNIA

THE STATE OF CALIFORNIA OR ITS OFFICERS OR AGENTS SHALL NOT BE RESPONSIBLE FOR THE ACCURACY OR COMPLETENESS OF SCANNED COPIES OF THIS PLAN SHEET.

NOTES:

1. FOR ACCURATE RIGHT OF WAY DATA, CONTACT RIGHT OF WAY ENGINEERING AT THE DISTRICT OFFICE.
2. EXISTING UTILITY FACILITIES HAVE NOT BEEN POSITIVELY IDENTIFIED.

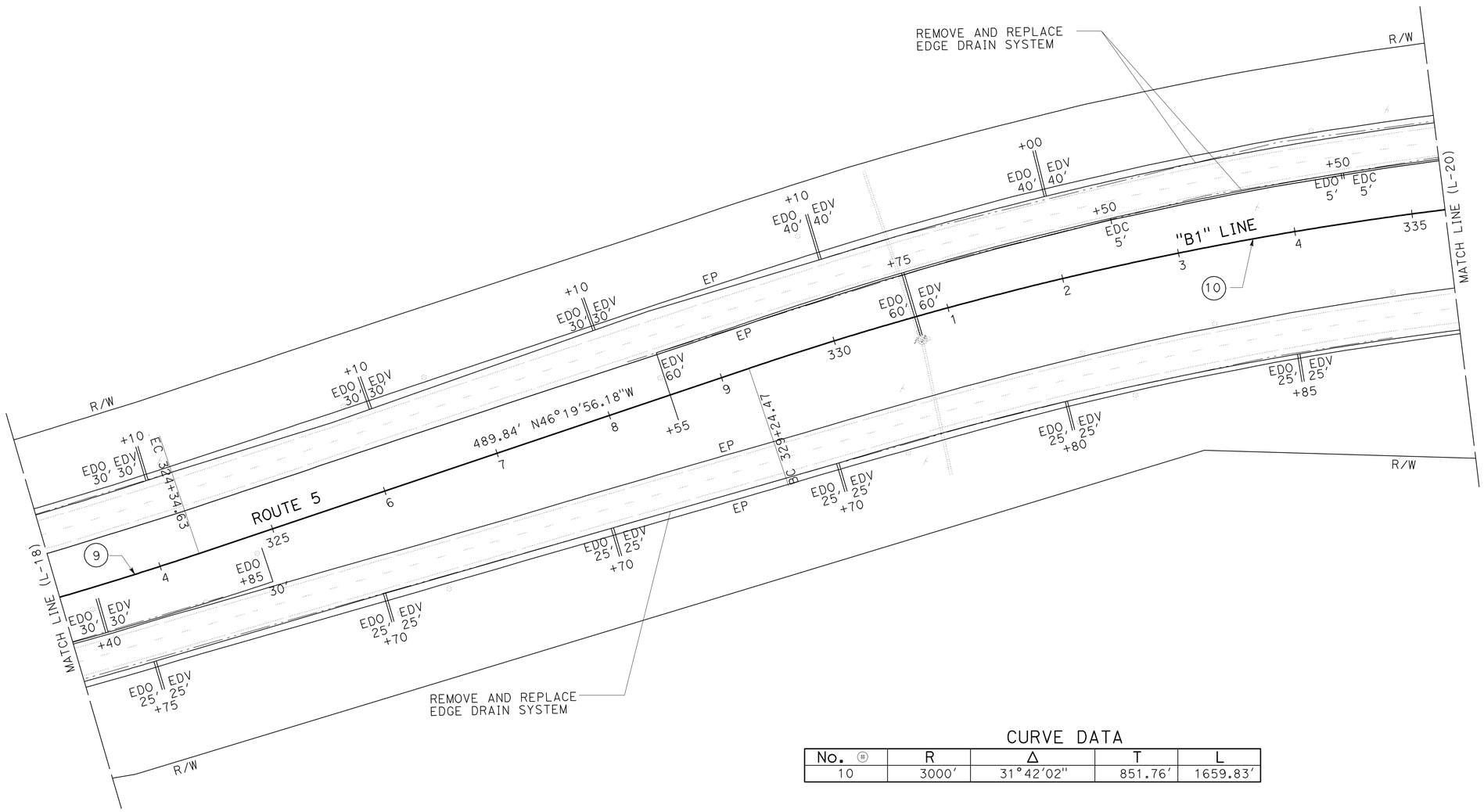

CURVE DATA

No. ⊕	R	Δ	T	L
10	3000'	31°42'02"	851.76'	1659.83'

LAYOUT

SCALE: 1" = 50'

L-19

BRIAN STEINER — APOLINARIO VIVIT — CALCULATED-DESIGNED BY — CHECKED BY — REVISED BY — DATE REVISED

FUNCTIONAL SUPERVISOR: APOLINARIO VIVIT

STATE OF CALIFORNIA - DEPARTMENT OF TRANSPORTATION

Caltrans® DESIGN

P:\proj\02\3E750_plans\pse\23e750ea019.dgn

LAST REVISION 05-27-11 | DATE PLOTTED => 01-JUN-2011 | TIME PLOTTED => 09:52

BORDER LAST REVISED 7/2/2010 | USERNAME => s115152 | DGN FILE => 23e750ea019.dgn | RELATIVE BORDER SCALE IS IN INCHES 0 1 2 3 | UNIT 0317 | PROJECT NUMBER & PHASE 02000201611

Dist	COUNTY	ROUTE	POST MILES TOTAL PROJECT	SHEET No.	TOTAL SHEETS
02	Sis	5	R19/R25.3	26	149

REGISTERED CIVIL ENGINEER DATE 05-27-11

05-27-11
PLANS APPROVAL DATE

REGISTERED PROFESSIONAL ENGINEER
APOLINARIO W. VIVIT
No. C66046
Exp. 06-30-12
CIVIL
STATE OF CALIFORNIA

THE STATE OF CALIFORNIA OR ITS OFFICERS OR AGENTS SHALL NOT BE RESPONSIBLE FOR THE ACCURACY OR COMPLETENESS OF SCANNED COPIES OF THIS PLAN SHEET.

NOTES:

1. FOR ACCURATE RIGHT OF WAY DATA, CONTACT RIGHT OF WAY ENGINEERING AT THE DISTRICT OFFICE.
2. EXISTING UTILITY FACILITIES HAVE NOT BEEN POSITIVELY IDENTIFIED.

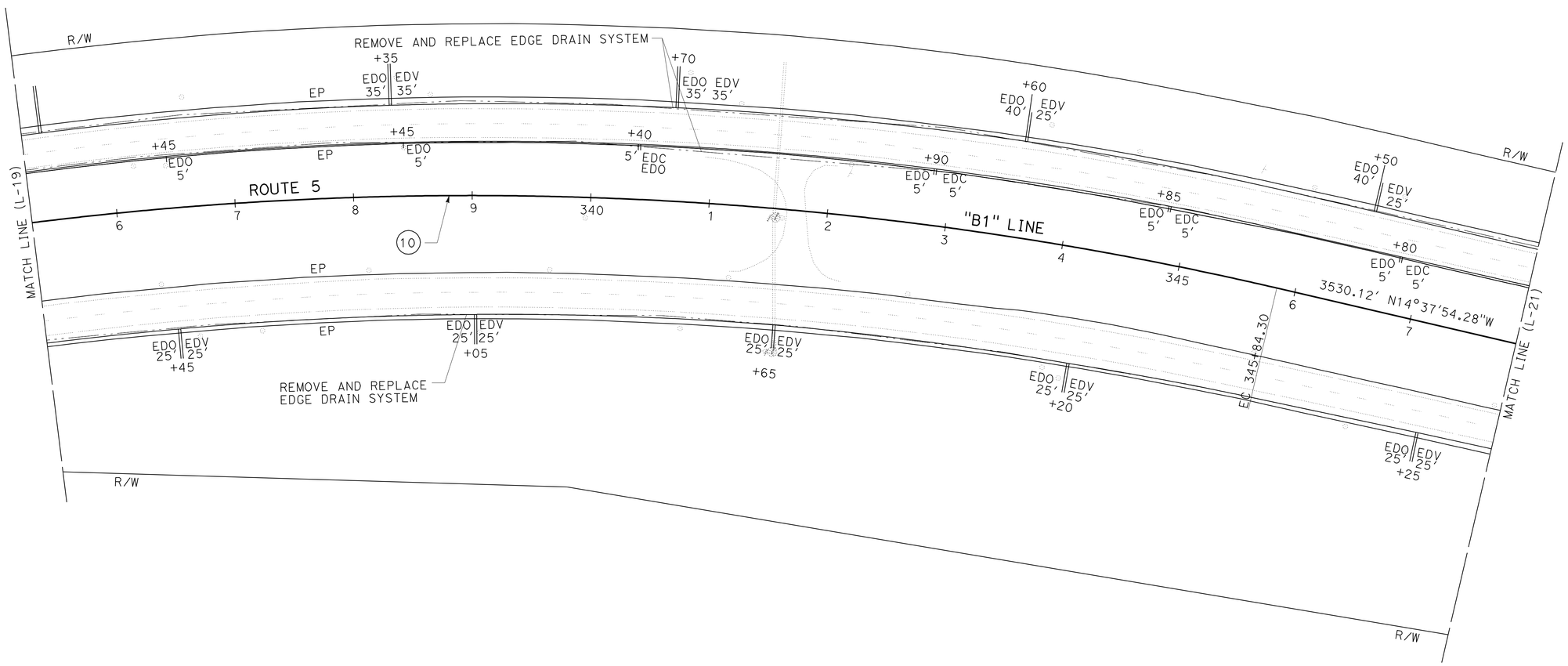

LAYOUT
SCALE: 1" = 50′

L-20

BRIAN STEINER — REVISED BY
APOLINARIO VIVIT — DATE REVISED
CALCULATED-DESIGNED BY
CHECKED BY
FUNCTIONAL SUPERVISOR
APOLINARIO VIVIT

STATE OF CALIFORNIA - DEPARTMENT OF TRANSPORTATION
Caltrans
DESIGN

P:\proj1\02\3E750_plans\pse\23e750ea020.dgn

LAST REVISION 05-27-11
DATE PLOTTED => 01-JUN-2011
TIME PLOTTED => 09:52

Dist	COUNTY	ROUTE	POST MILES TOTAL PROJECT	SHEET No.	TOTAL SHEETS
02	Sis	5	R19/R25.3	27	149

REGISTERED CIVIL ENGINEER DATE 05-27-11

05-27-11
PLANS APPROVAL DATE

REGISTERED PROFESSIONAL ENGINEER
APOLINARIO W. VIVIT
No. C66046
Exp. 06-30-12
CIVIL
STATE OF CALIFORNIA

THE STATE OF CALIFORNIA OR ITS OFFICERS OR AGENTS SHALL NOT BE RESPONSIBLE FOR THE ACCURACY OR COMPLETENESS OF SCANNED COPIES OF THIS PLAN SHEET.

NOTES:

1. FOR ACCURATE RIGHT OF WAY DATA, CONTACT RIGHT OF WAY ENGINEERING AT THE DISTRICT OFFICE.
2. EXISTING UTILITY FACILITIES HAVE NOT BEEN POSITIVELY IDENTIFIED.

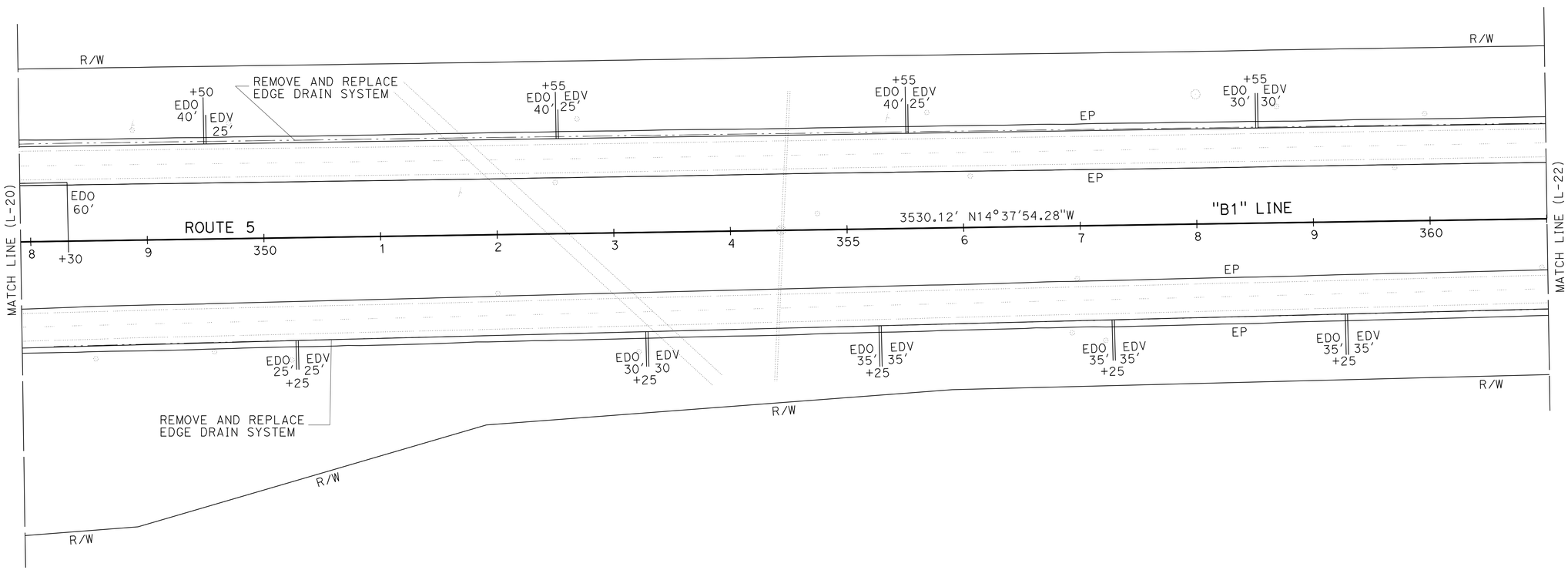

LAYOUT

SCALE: 1" = 50′ **L-21**

REVISED BY	DATE REVISED
BRIAN STEINER	APOLINARIO VIVIT
CALCULATED-DESIGNED BY	CHECKED BY
FUNCTIONAL SUPERVISOR	APOLINARIO VIVIT

STATE OF CALIFORNIA - DEPARTMENT OF TRANSPORTATION
Caltrans
DESIGN

P:\proj1\02\3E750_plans\pse\23e750ea021.dgn

LAST REVISION 05-27-11 | DATE PLOTTED => 01-JUN-2011 | TIME PLOTTED => 09:52

Dist	COUNTY	ROUTE	POST MILES TOTAL PROJECT	SHEET No.	TOTAL SHEETS
02	Sis	5	R19/R25.3	28	149

REGISTERED CIVIL ENGINEER 05-27-11 DATE

05-27-11
PLANS APPROVAL DATE

REGISTERED PROFESSIONAL ENGINEER
APOLINARIO W. VIVIT
No. C66046
Exp. 06-30-12
CIVIL
STATE OF CALIFORNIA

THE STATE OF CALIFORNIA OR ITS OFFICERS OR AGENTS SHALL NOT BE RESPONSIBLE FOR THE ACCURACY OR COMPLETENESS OF SCANNED COPIES OF THIS PLAN SHEET.

NOTES:

1. FOR ACCURATE RIGHT OF WAY DATA, CONTACT RIGHT OF WAY ENGINEERING AT THE DISTRICT OFFICE.
2. EXISTING UTILITY FACILITIES HAVE NOT BEEN POSITIVELY IDENTIFIED.

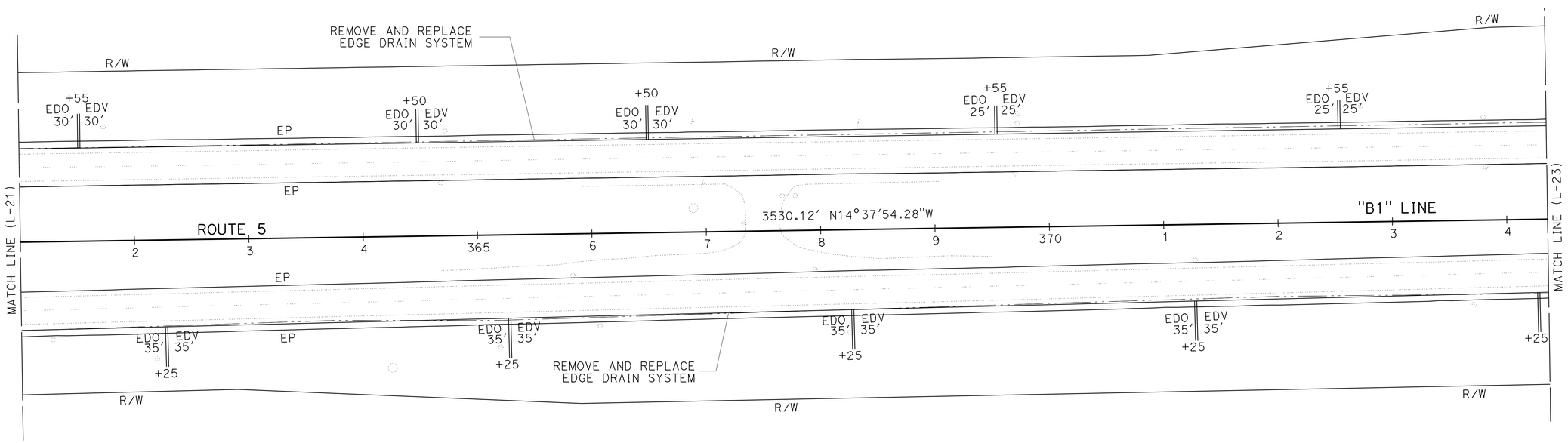

LAYOUT

SCALE: 1" = 50′

L-22

REVISED BY	DATE REVISED

CALCULATED-DESIGNED BY: BRIAN STEINER
CHECKED BY: APOLINARIO VIVIT
FUNCTIONAL SUPERVISOR: APOLINARIO VIVIT

STATE OF CALIFORNIA - DEPARTMENT OF TRANSPORTATION
Caltrans
DESIGN

P:\proj1\02\3E750_plans\pse\23e750ea022.dgn

LAST REVISION 05-27-11
DATE PLOTTED => 01-JUN-2011
TIME PLOTTED => 09:52

Dist	COUNTY	ROUTE	POST MILES TOTAL PROJECT	SHEET No.	TOTAL SHEETS
02	Sis	5	R19/R25.3	29	149

REGISTERED CIVIL ENGINEER 05-27-11 DATE

05-27-11
PLANS APPROVAL DATE

REGISTERED PROFESSIONAL ENGINEER
APOLINARIO W. VIVIT
No. C66046
Exp. 06-30-12
CIVIL
STATE OF CALIFORNIA

THE STATE OF CALIFORNIA OR ITS OFFICERS OR AGENTS SHALL NOT BE RESPONSIBLE FOR THE ACCURACY OR COMPLETENESS OF SCANNED COPIES OF THIS PLAN SHEET.

NOTES:

1. FOR ACCURATE RIGHT OF WAY DATA, CONTACT RIGHT OF WAY ENGINEERING AT THE DISTRICT OFFICE.
2. EXISTING UTILITY FACILITIES HAVE NOT BEEN POSITIVELY IDENTIFIED.

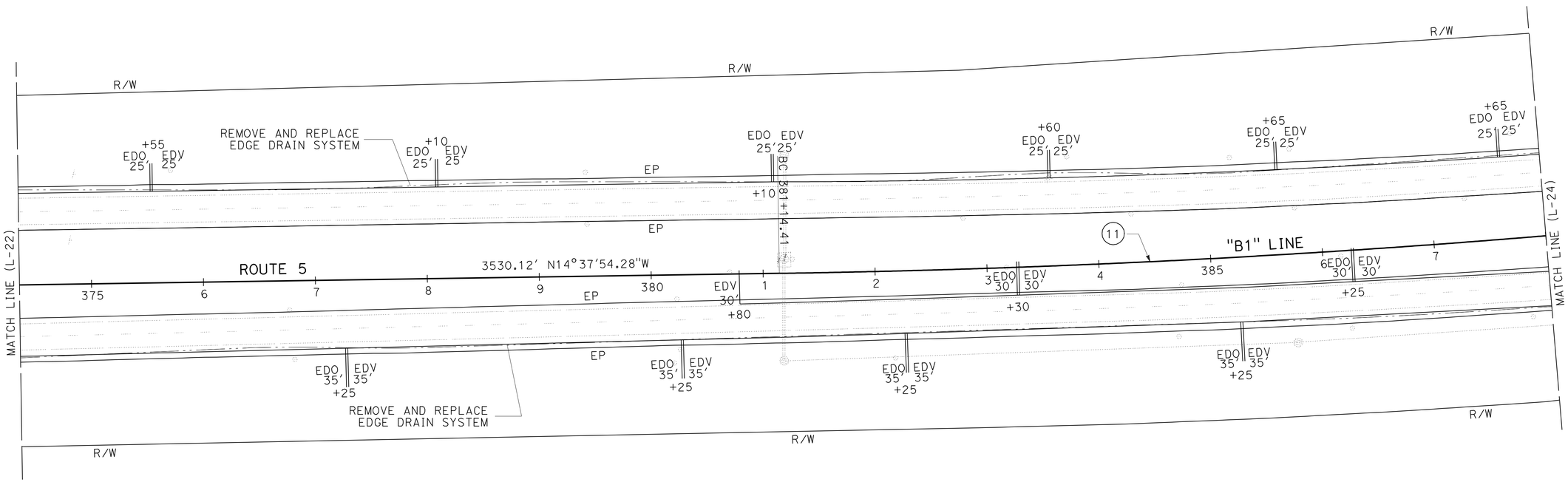

CURVE DATA

No. ⑪	R	Δ	T	L
11	10120'	11°48'31"	1046.57'	2085.72'

LAYOUT
SCALE: 1" = 50'

L-23

BRIAN STEINER
APOLINARIO VIVIT
CALCULATED-DESIGNED BY
CHECKED BY
REVISED BY
DATE REVISED
FUNCTIONAL SUPERVISOR
APOLINARIO VIVIT

STATE OF CALIFORNIA - DEPARTMENT OF TRANSPORTATION
Caltrans
DESIGN

P:\proj1\02\3E750_plans\pse\23e750ea023.dgn

LAST REVISION 05-27-11
DATE PLOTTED => 01-JUN-2011
TIME PLOTTED => 09:52

Dist	COUNTY	ROUTE	POST MILES TOTAL PROJECT	SHEET No.	TOTAL SHEETS
02	Sis	5	R19/R25.3	30	149

REGISTERED CIVIL ENGINEER DATE 05-27-11

PLANS APPROVAL DATE 05-27-11

REGISTERED PROFESSIONAL ENGINEER APOLINARIO W. VIVIT No. C66046 Exp. 06-30-12 CIVIL STATE OF CALIFORNIA

THE STATE OF CALIFORNIA OR ITS OFFICERS OR AGENTS SHALL NOT BE RESPONSIBLE FOR THE ACCURACY OR COMPLETENESS OF SCANNED COPIES OF THIS PLAN SHEET.

NOTES:

1. FOR ACCURATE RIGHT OF WAY DATA, CONTACT RIGHT OF WAY ENGINEERING AT THE DISTRICT OFFICE.
2. EXISTING UTILITY FACILITIES HAVE NOT BEEN POSITIVELY IDENTIFIED.

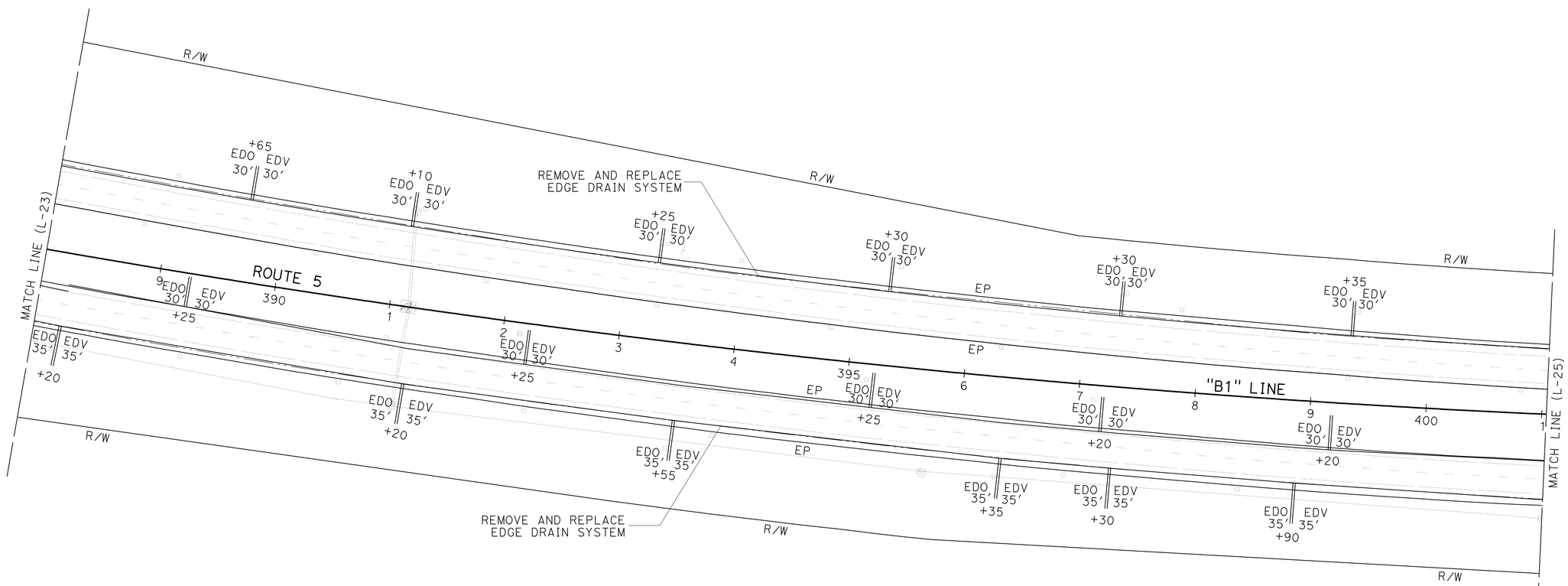

LAYOUT

SCALE: 1" = 50′ **L-24**

REVISED BY	DATE REVISED

CALCULATED-DESIGNED BY	BRIAN STEINER
CHECKED BY	APOLINARIO VIVIT
FUNCTIONAL SUPERVISOR	APOLINARIO VIVIT

STATE OF CALIFORNIA - DEPARTMENT OF TRANSPORTATION

Caltrans® **DESIGN**

P:\proj1\02\3E750_plans\pse\23e750ea024.dgn

LAST REVISION 05-27-11 | DATE PLOTTED => 01-JUN-2011 | TIME PLOTTED => 09:52

Dist	COUNTY	ROUTE	POST MILES TOTAL PROJECT	SHEET No.	TOTAL SHEETS
02	Sis	5	R19/R25.3	31	149

REGISTERED CIVIL ENGINEER 05-27-11 DATE

05-27-11
PLANS APPROVAL DATE

REGISTERED PROFESSIONAL ENGINEER
APOLINARIO W. VIVIT
No. C66046
Exp. 06-30-12
CIVIL
STATE OF CALIFORNIA

THE STATE OF CALIFORNIA OR ITS OFFICERS OR AGENTS SHALL NOT BE RESPONSIBLE FOR THE ACCURACY OR COMPLETENESS OF SCANNED COPIES OF THIS PLAN SHEET.

NOTES:

1. FOR ACCURATE RIGHT OF WAY DATA, CONTACT RIGHT OF WAY ENGINEERING AT THE DISTRICT OFFICE.
2. EXISTING UTILITY FACILITIES HAVE NOT BEEN POSITIVELY IDENTIFIED.

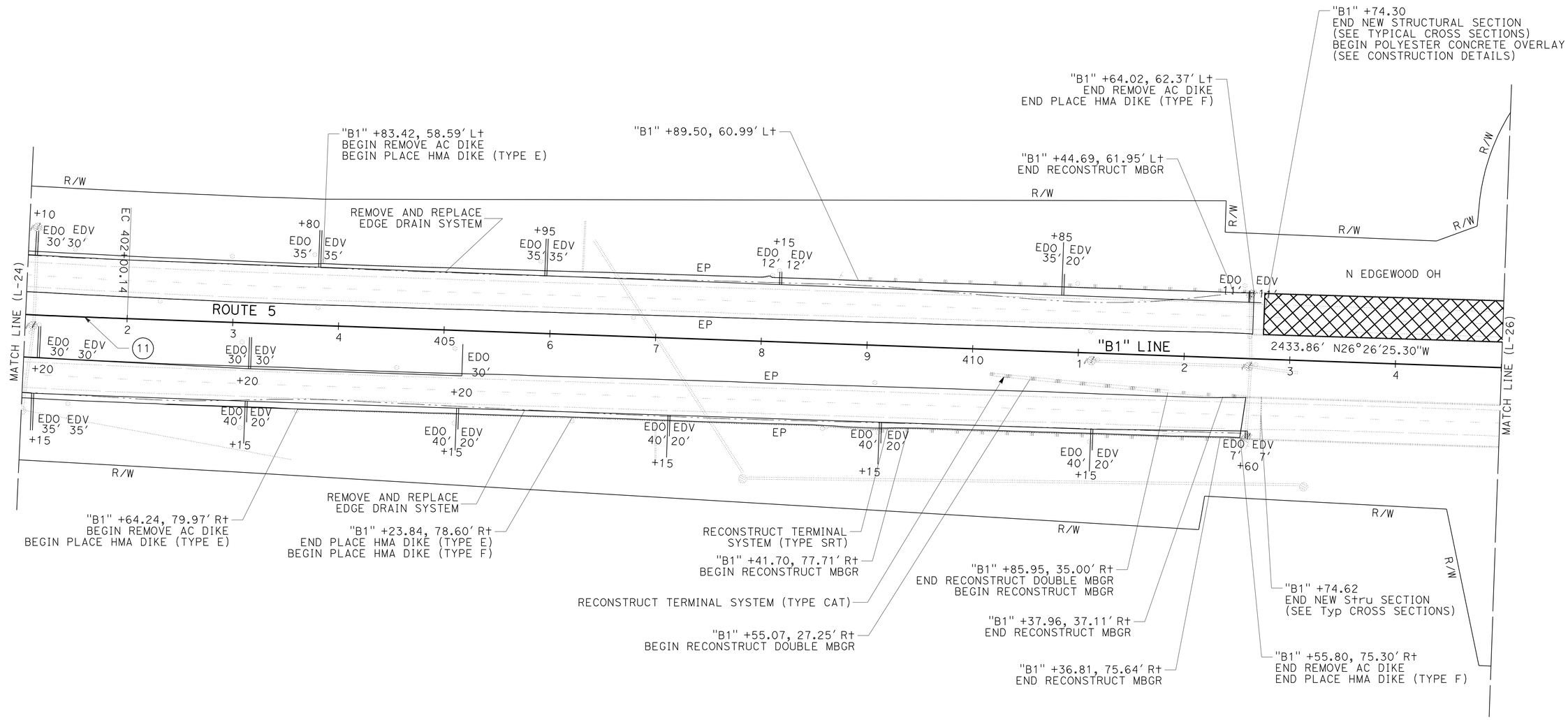

LAYOUT

SCALE: 1" = 50'

L-25

REVISED BY	DATE REVISED
BRIAN STEINER	APOLINARIO VIVIT
CALCULATED-DESIGNED BY	CHECKED BY
FUNCTIONAL SUPERVISOR	APOLINARIO VIVIT

STATE OF CALIFORNIA - DEPARTMENT OF TRANSPORTATION
Caltrans
DESIGN

P:\proj1\02\3E750_plans\pse\23e750ea025.dgn

LAST REVISION 05-27-11 | DATE PLOTTED => 01-JUN-2011 | TIME PLOTTED => 09:52

Dist	COUNTY	ROUTE	POST MILES TOTAL PROJECT	SHEET No.	TOTAL SHEETS
02	Sis	5	R19/R25.3	32	149

REGISTERED CIVIL ENGINEER 05-27-11 DATE

05-27-11
PLANS APPROVAL DATE

REGISTERED PROFESSIONAL ENGINEER
APOLINARIO W. VIVIT
No. C66046
Exp. 06-30-12
CIVIL
STATE OF CALIFORNIA

THE STATE OF CALIFORNIA OR ITS OFFICERS OR AGENTS SHALL NOT BE RESPONSIBLE FOR THE ACCURACY OR COMPLETENESS OF SCANNED COPIES OF THIS PLAN SHEET.

NOTES:

1. FOR ACCURATE RIGHT OF WAY DATA, CONTACT RIGHT OF WAY ENGINEERING AT THE DISTRICT OFFICE.
2. EXISTING UTILITY FACILITIES HAVE NOT BEEN POSITIVELY IDENTIFIED.
3. FOR ANCHOR BLOCK DETAILS SEE CONSTRUCTION DETAIL SHEET, C-6

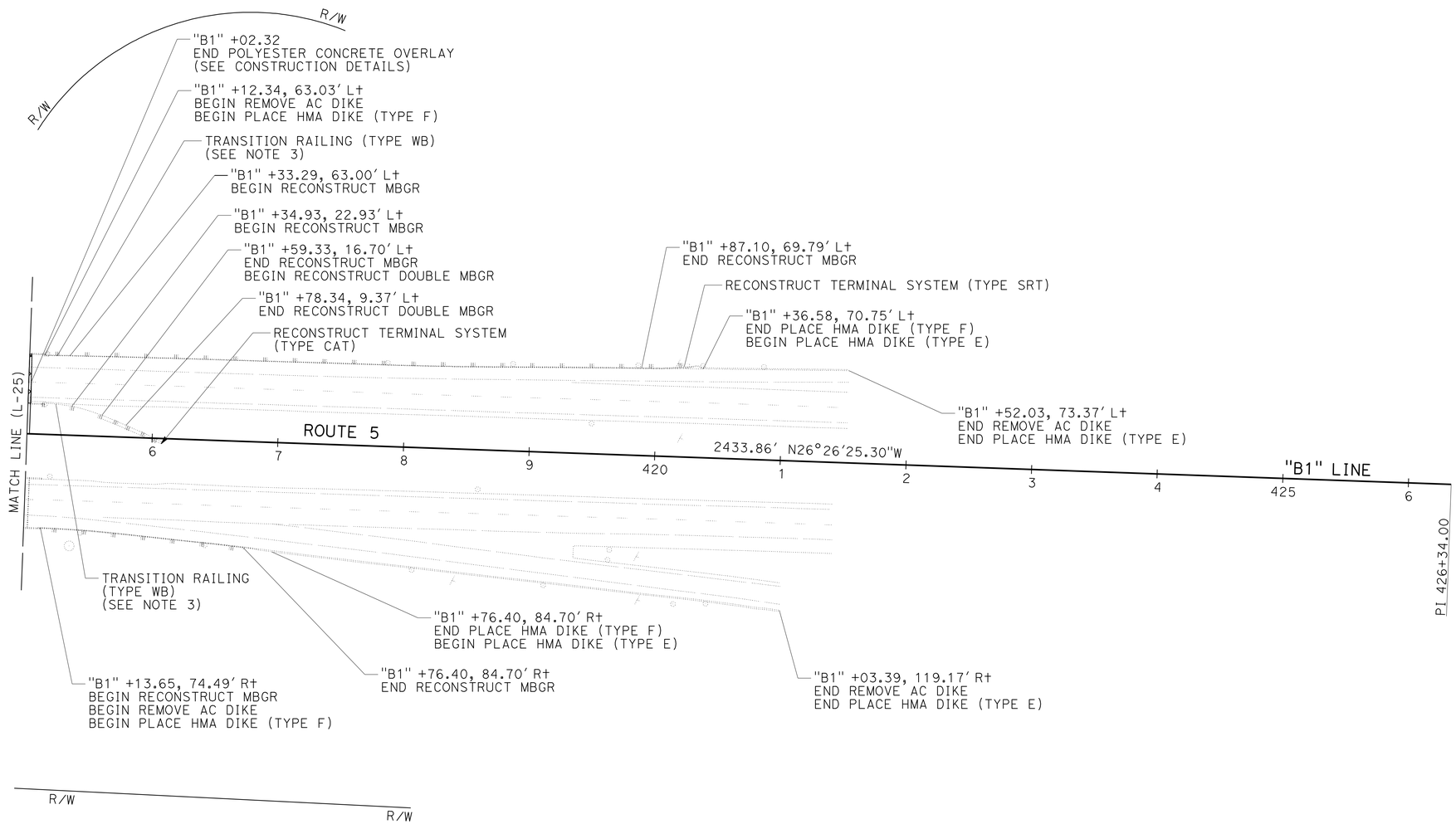

LAYOUT
SCALE: 1" = 50′

L-26

REVISED BY	DATE REVISED
BRIAN STEINER	APOLINARIO VIVIT
CALCULATED-DESIGNED BY	CHECKED BY
FUNCTIONAL SUPERVISOR	APOLINARIO VIVIT

STATE OF CALIFORNIA - DEPARTMENT OF TRANSPORTATION
Caltrans
DESIGN

P:\proj1\02\3E750_plans\pse\23e750ea026.dgn

LAST REVISION 05-27-11
DATE PLOTTED => 01-JUN-2011
TIME PLOTTED => 09:53

Dist	COUNTY	ROUTE	POST MILES TOTAL PROJECT	SHEET No.	TOTAL SHEETS
02	Sis	5	R19/R25.3	33	149

REGISTERED CIVIL ENGINEER 05-27-11 DATE

05-27-11
PLANS APPROVAL DATE

REGISTERED PROFESSIONAL ENGINEER APOLINARIO W. VIVIT No. C66046 Exp. 06-30-12 CIVIL STATE OF CALIFORNIA

THE STATE OF CALIFORNIA OR ITS OFFICERS OR AGENTS SHALL NOT BE RESPONSIBLE FOR THE ACCURACY OR COMPLETENESS OF SCANNED COPIES OF THIS PLAN SHEET.

NOTES:

1. LENGTH OF TAPER BASED ON ROADWAY Elev AT BEGIN CONFORM AND GRADE OF BRIDGE DECK OR APPROACH SLAB.
2. FOR Exist ROADWAY SECTIONS WITH PCC, REMOVE ENTIRE DEPTH OF PCC.
3. FOR Exist ROADWAY STRUCTURAL SECTION SEE TYPICAL CROSS SECTION SHEETS.
4. 0.75′ STRUCTURAL SECTION IS BELOW BOTTOM OF EXISTING PCC PAVEMENT. USE 1.08′ (Min) STRUCTURAL SECTION.
5. BRIDGES WITH APPROACH SLABS ONLY, OTHERWISE CONFORM TO BRIDGE DECK OR POLYESTER OVERLAY ELEVATIONS.

LEGEND:

DIRECTION OF TRAFFIC

ROADWAY EXCAVATION

BOTTOM OF SHOULDER PAVEMENT CONFORM

ABBREVIATIONS:

HMA15 HMA (15% Max RAP, LONG LIFE)
HMA25 HMA (25% RAP, LONG LIFE)
RAP RECLAIMED ASPHALT PAVEMENT
XS CROSS SECTION

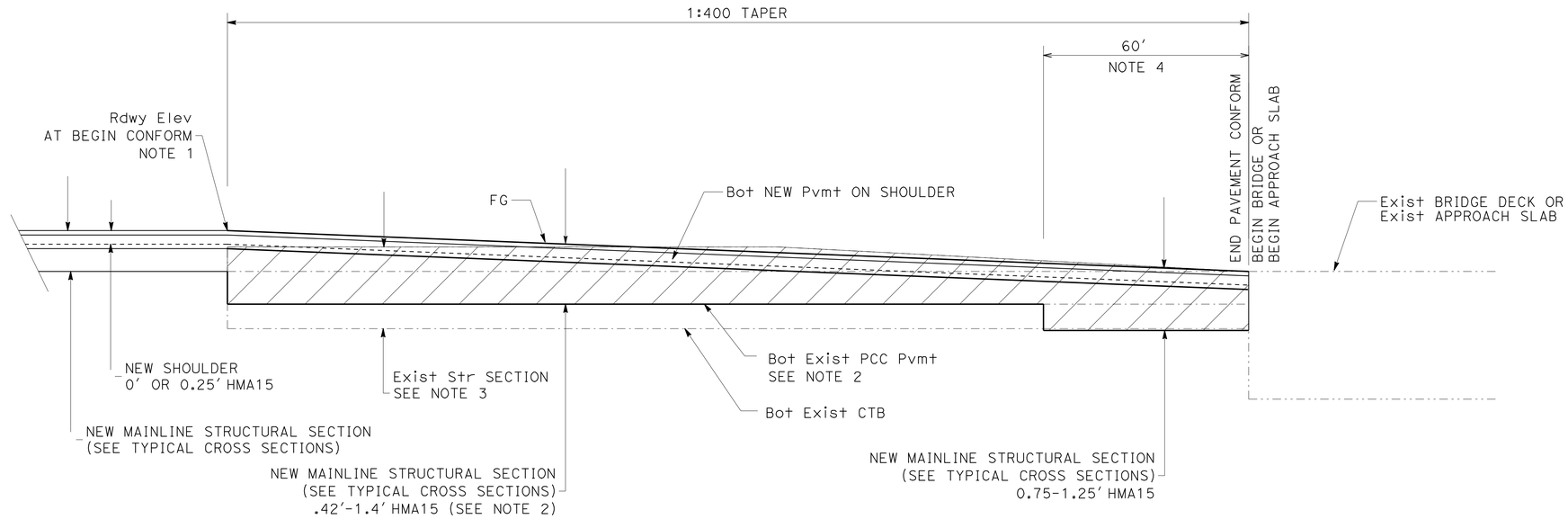

PROFILE VIEW
APPROACH TAPER SHOWN DEPARTURE TAPER SIMILAR

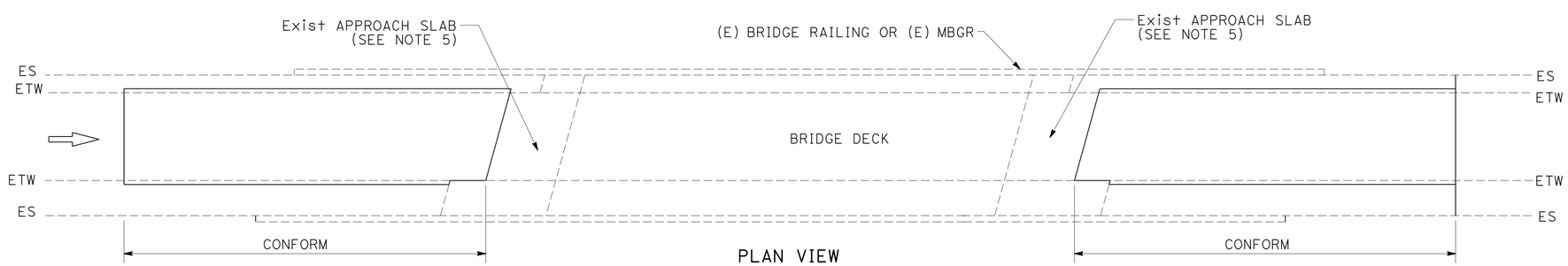

PLAN VIEW

NOTE:
ONLY RIGHT STRUCTURE SHOWN
DETAIL SIMILAR FOR LEFT STRUCTURE

CONFORM AT STRUCTURE

ROUTE ROUTE 5/97 Sep - Sta "B1" 106+92 Lt, 107+50 Rt
ROUTE 5/265 Sep - Sta "B1" 147+97 Lt, 148+03 Rt, 149+08 Lt, 149+11 Rt
SHASTA RIVER Br - Sta "B1" 274+83 Lt, 275+65 Rt, 276+76 Lt, 277+43 Rt
EDGEWOOD UC Sta "B1" 295+14 Lt, 295+17 Rt, 296+59 Lt, 296+65 Rt
NORTH EDGEWOOD OH Sta "B1" 412+74 Lt, 412+75 Rt

CONSTRUCTION DETAILS

NO SCALE

C-1

REVISED BY | DATE REVISED
BRIAN STEINER | APOLINARIO VIVIT
CALCULATED-DESIGNED BY | CHECKED BY
FUNCTIONAL SUPERVISOR: APOLINARIO VIVIT

STATE OF CALIFORNIA - DEPARTMENT OF TRANSPORTATION
Caltrans DESIGN

P:\proj1\02\3E750_plans\pse\23e750ga001.dgn

LAST REVISION 05-27-11 | DATE PLOTTED => 01-JUN-2011 | TIME PLOTTED => 09:53

Dist	COUNTY	ROUTE	POST MILES TOTAL PROJECT	SHEET No.	TOTAL SHEETS
02	Sis	5	R19/R25.3	34	149

REGISTERED CIVIL ENGINEER 05-27-11 DATE

05-27-11
PLANS APPROVAL DATE

REGISTERED PROFESSIONAL ENGINEER APOLINARIO W. VIVIT No. C66046 Exp. 06-30-12 CIVIL STATE OF CALIFORNIA

THE STATE OF CALIFORNIA OR ITS OFFICERS OR AGENTS SHALL NOT BE RESPONSIBLE FOR THE ACCURACY OR COMPLETENESS OF SCANNED COPIES OF THIS PLAN SHEET.

LEGEND:

SEE RAMP TYPICAL SECTION DETAILS

COLD PLANE AC PAVEMENT

ABBREVIATIONS:

CPACP	COLD PLANE ASPHALT CONCRETE PAVEMENT
ARSC	ASPHALT-RUBBER SEAL COAT
HMA15	HMA (15% MAX RAP, LONG LIFE)
HMA25	HMA (25% RAP, LONG LIFE)
RAP	RECLAIMED ASPHALT PAVEMENT

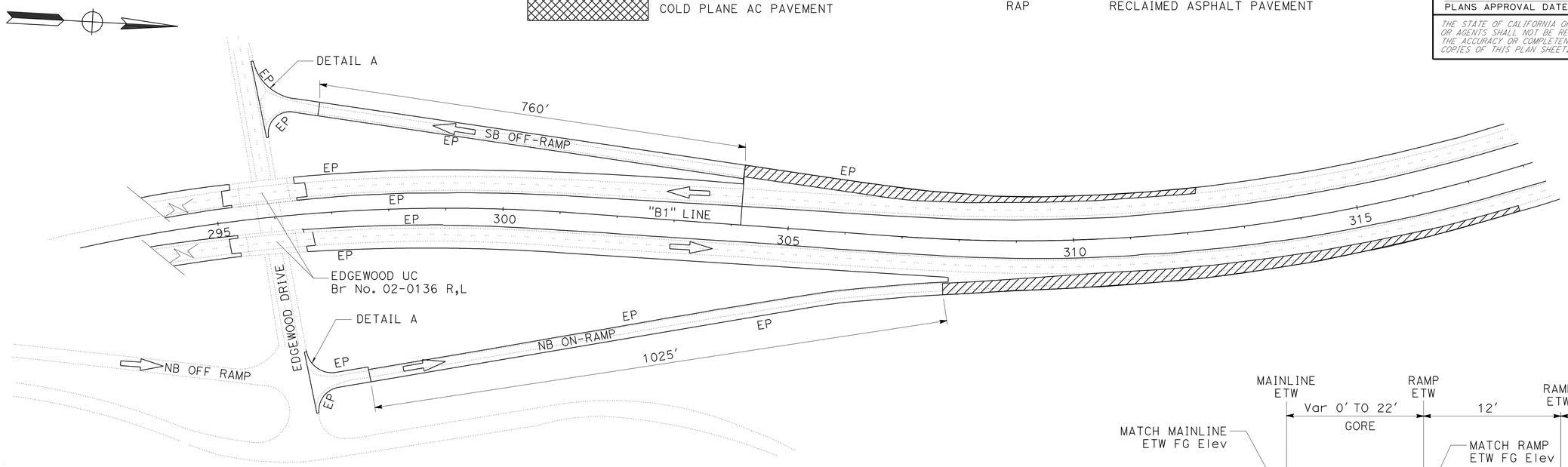

RAMP PAVING AND CONFORMS

EDGEWOOD UC
SB OFF RAMP AND NB ON RAMP

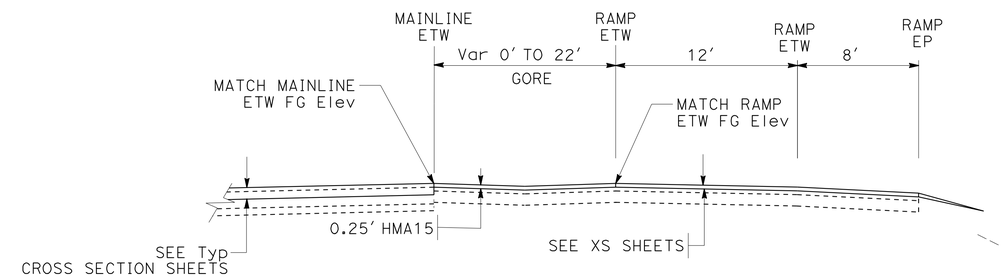

RAMP TYPICAL SECTION

"B1" 304+33.4 TO "B1" 308+70
EDGEWOOD UC SB OFF-RAMP

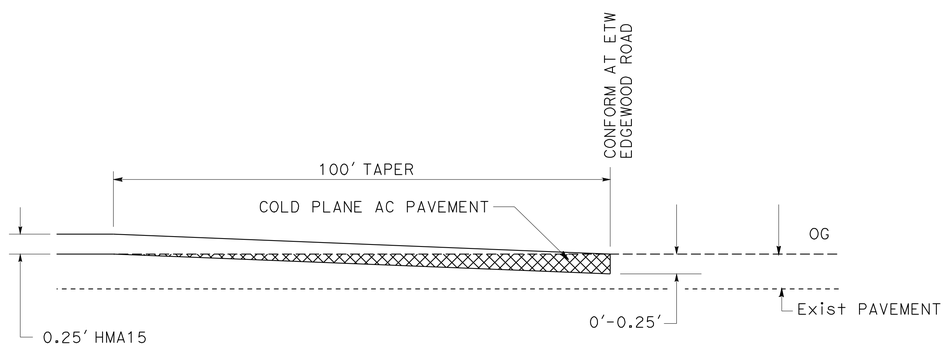

DETAIL A

RAMP TERMINUS CONFORM TAPER
EDGEWOOD UC

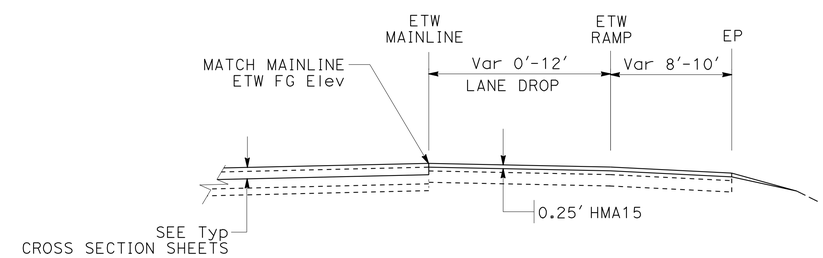

RAMP TYPICAL SECTION

"B1" 307+85.4 TO "B1" 315+30
EDGEWOOD UC NB ON-RAMP

CONSTRUCTION DETAILS

NO SCALE

C-2

STATE OF CALIFORNIA - DEPARTMENT OF TRANSPORTATION
DESIGN
FUNCTIONAL SUPERVISOR: APOLINARIO VIVIT
CALCULATED-DESIGNED BY: STEVE ALAWAR
CHECKED BY: LORI EWENS
REVISED BY / DATE REVISED

P:\proj1\02\3E750\plans\pse\23e750ga002.dgn

LAST REVISION 05-27-11 | DATE PLOTTED => 01-JUN-2011 | TIME PLOTTED => 09:53

Dist	COUNTY	ROUTE	POST MILES TOTAL PROJECT	SHEET No.	TOTAL SHEETS
02	Sis	5	R19/R25.3	35	149

REGISTERED CIVIL ENGINEER 05-27-11 DATE

05-27-11
PLANS APPROVAL DATE

REGISTERED PROFESSIONAL ENGINEER
APOLINARIO W. VIVIT
No. C66046
Exp. 06-30-12
CIVIL
STATE OF CALIFORNIA

THE STATE OF CALIFORNIA OR ITS OFFICERS OR AGENTS SHALL NOT BE RESPONSIBLE FOR THE ACCURACY OR COMPLETENESS OF SCANNED COPIES OF THIS PLAN SHEET.

LEGEND:

RAMP TYPICAL SECTIONS

COLD PLANE AC PAVEMENT

ABBREVIATIONS

CPACP	COLD PLANE ASPHALT CONCRETE PAVEMENT
ARSC	ASPHALT-RUBBER SEAL COAT
HMA15	HMA (15% MAX RAP, LONG LIFE)
HMA25	HMA (25% RAP, LONG LIFE)
RAP	RECLAIMED ASPHALT PAVEMENT

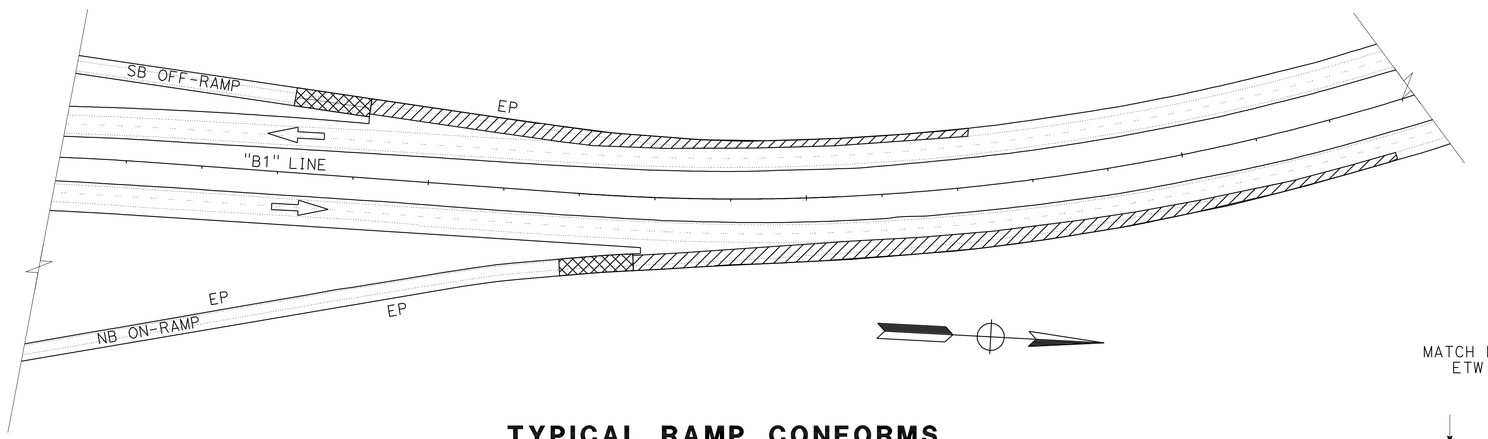

TYPICAL RAMP CONFORMS

5/97 NB ON-RAMP, SB OFF-RAMP
5\265 NB OFF-RAMP, NB ON-RAMP, SB OFF-RAMP, SB ON-RAMP
EDGEWOOD UC NB OFF-RAMP, SB ON-RAMP

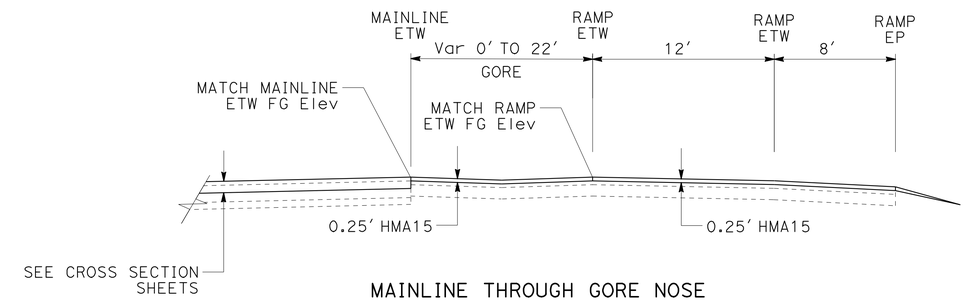

MAINLINE THROUGH GORE NOSE

SB "B1" 114+09 TO "B1" 117+96
NB "B1" 130+06.7 TO "B1" 134+84.7
SB "B1" 159+53.5 TO "B1" 163+78.1
NB "B1" 281+39.7 TO "B1" 287+34

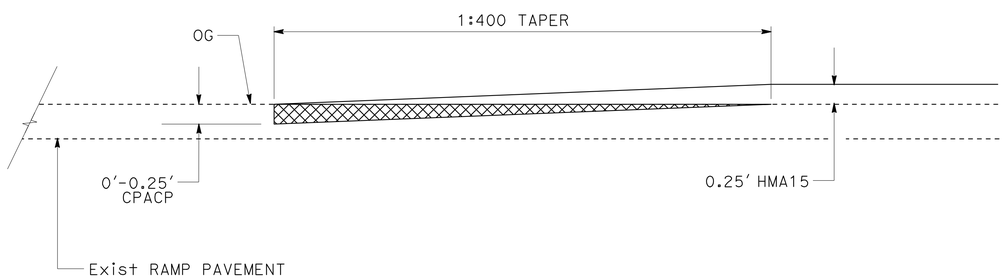

PAVEMENT CONFORM

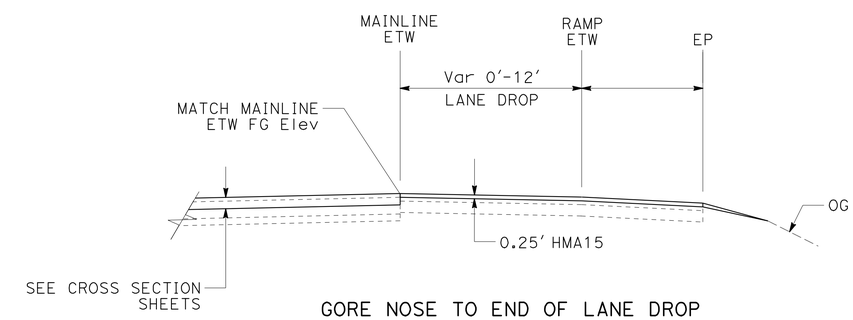

GORE NOSE TO END OF LANE DROP

NB "B1" 117+55 TO "B1" 126+28
SB "B1" 127+98 TO "B1" 136+45.8
NB "B1" 159+82 TO "B1" 168+46
SB "B1" 277+65 TO "B1" 286+91.5

RAMP TYPICAL SECTIONS

CONSTRUCTION DETAILS

NO SCALE

C-3

REVISED BY | DATE REVISED
STEVE ALAWAR | LORI EWENS
CALCULATED-DESIGNED BY | CHECKED BY
FUNCTIONAL SUPERVISOR: APOLINARIO VIVIT

STATE OF CALIFORNIA - DEPARTMENT OF TRANSPORTATION
Caltrans® DESIGN

P:\proj\02\3E750_plans\pse\23e750ga003.dgn

LAST REVISION 05-27-11 | DATE PLOTTED => 01-JUN-2011 | TIME PLOTTED => 09:53

Dist	COUNTY	ROUTE	POST MILES TOTAL PROJECT	SHEET No.	TOTAL SHEETS
02	Sis	5	R19/R25.3	36	149

REGISTERED CIVIL ENGINEER 05-27-11 DATE

05-27-11
PLANS APPROVAL DATE

REGISTERED PROFESSIONAL ENGINEER APOLINARIO W. VIVIT No. C66046 Exp. 06-30-12 CIVIL STATE OF CALIFORNIA

THE STATE OF CALIFORNIA OR ITS OFFICERS OR AGENTS SHALL NOT BE RESPONSIBLE FOR THE ACCURACY OR COMPLETENESS OF SCANNED COPIES OF THIS PLAN SHEET.

NOTES:

1. FOR RUMBLE STRIP DETAILS NOT SHOWN, SEE STANDARD PLAN A40B.
2. RUMBLE STRIPS SHALL BE INSTALLED ON BOTH INSIDE AND OUTSIDE SHOULDERS, EXCEPT RAMPS, ACROSS EXISTING BRIDGE STRUCTURES AND UNDERCROSSING.
3. SEE SUMMARY OF QUANTITIES FOR LIMITS.
4. NEW BEGIN AND END OF RUMBLE STRIP TO BE LOCATED AT SAME LOCATION Exist RUMBLE STRIP, OR AS DIRECTED BY THE ENGINEER.

LEGEND:

DIRECTION OF TRAVEL

RUMBLE STRIP (GROUND-IN)

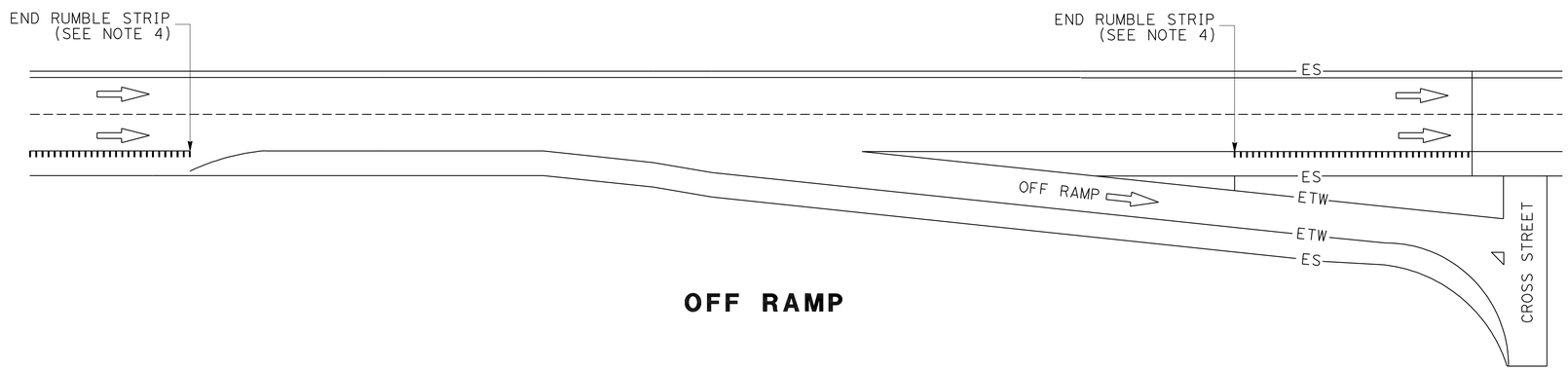

OFF RAMP

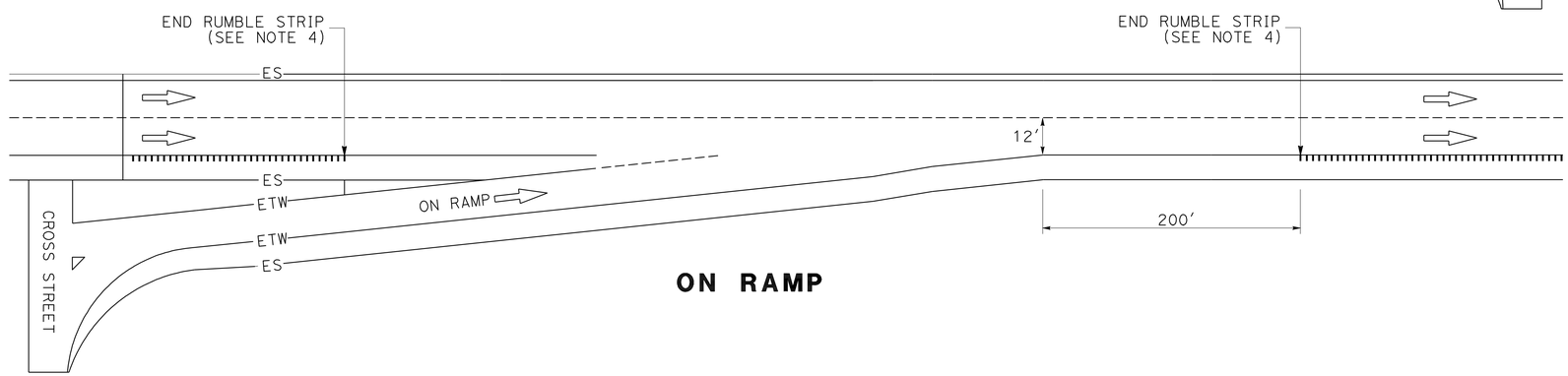

ON RAMP

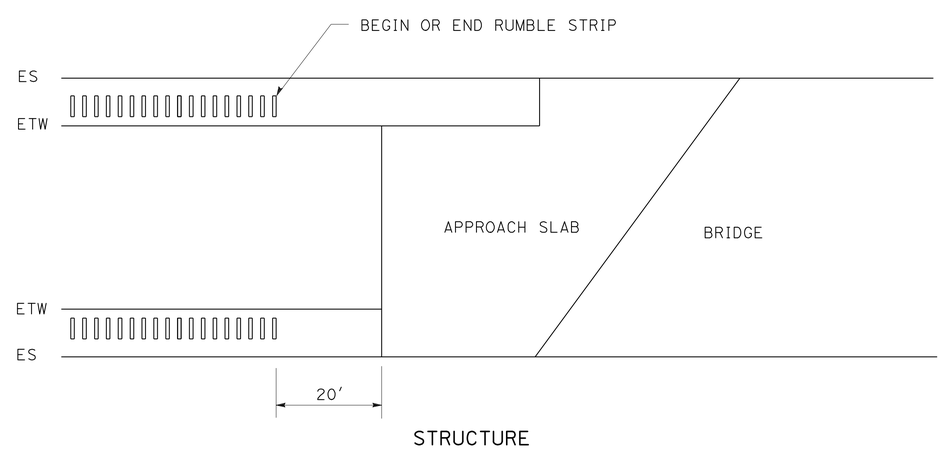

SHOULDER RUMBLE STRIP (GROUND-IN INDENTATIONS)

CONSTRUCTION DETAILS

NO SCALE

C-4

REVISED BY	DATE REVISED
BRIAN STEINER	APOLINARIO VIVIT
CALCULATED-DESIGNED BY	CHECKED BY
FUNCTIONAL SUPERVISOR	APOLINARIO VIVIT

STATE OF CALIFORNIA - DEPARTMENT OF TRANSPORTATION

Caltrans DESIGN

P:\proj1\02\3E750_plans\pse\23e750ga004.dgn

LAST REVISION 05-27-11 | DATE PLOTTED => 01-JUN-2011 TIME PLOTTED => 09:53

Dist	COUNTY	ROUTE	POST MILES TOTAL PROJECT	SHEET No.	TOTAL SHEETS
02	Sis	5	R19/R25.3	37	149

REGISTERED CIVIL ENGINEER 05-27-11 DATE

05-27-11
PLANS APPROVAL DATE

REGISTERED PROFESSIONAL ENGINEER
APOLINARIO W. VIVIT
No. C66046
Exp. 06-30-12
CIVIL
STATE OF CALIFORNIA

THE STATE OF CALIFORNIA OR ITS OFFICERS OR AGENTS SHALL NOT BE RESPONSIBLE FOR THE ACCURACY OR COMPLETENESS OF SCANNED COPIES OF THIS PLAN SHEET.

LEGEND:

REMOVE CONCRETE SIDEWALK
MINOR CONCRETE (SIDEWALK)

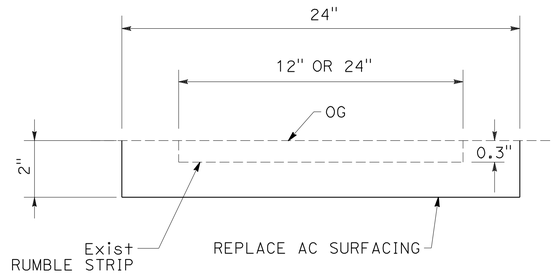

SECTION B-B

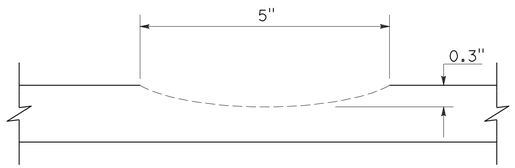

SECTION A-A

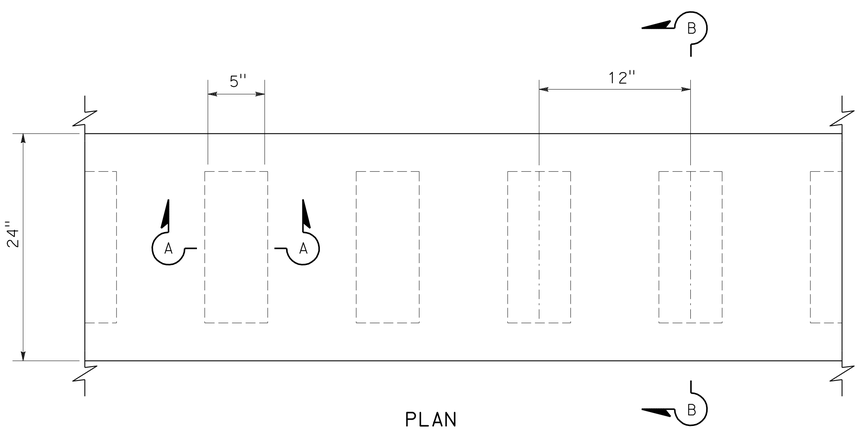

PLAN

STAGE 1, 2

REPLACE AC SURFACING AT RUMBLE STRIP

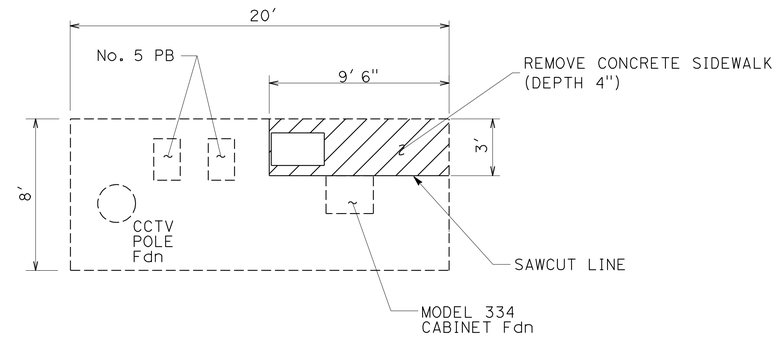

REMOVE CONCRETE FOR Exist CCTV WALKWAY

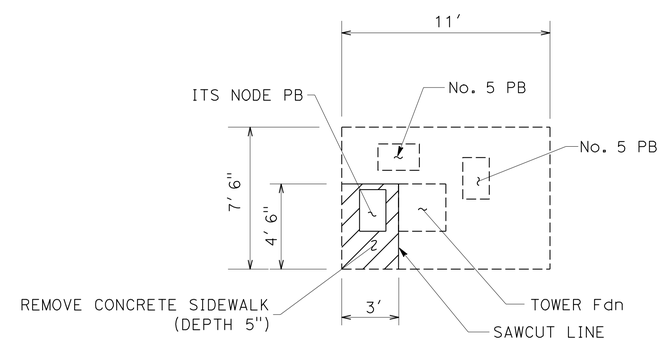

REMOVE CONCRETE FOR Exist RWIS WALKWAY

CONSTRUCTION DETAILS

NO SCALE

C-5

STATE OF CALIFORNIA - DEPARTMENT OF TRANSPORTATION
Caltrans
DESIGN

FUNCTIONAL SUPERVISOR: APOLINARIO VIVIT
CALCULATED-DESIGNED BY: LORI EWENS
CHECKED BY: APOLINARIO VIVIT
REVISED BY
DATE REVISED

P:\proj1\02\3E750_plans\pse\23e750ga005.dgn

LAST REVISION 05-27-11
DATE PLOTTED => 01-JUN-2011
TIME PLOTTED => 09:53

Dist	COUNTY	ROUTE	POST MILES TOTAL PROJECT	SHEET No.	TOTAL SHEETS
02	Sis	5	R19/R25.3	38	149

REGISTERED CIVIL ENGINEER 05-27-11 DATE

05-27-11
PLANS APPROVAL DATE

REGISTERED PROFESSIONAL ENGINEER APOLINARIO W. VIVIT No. C66046 Exp. 06-30-12 CIVIL STATE OF CALIFORNIA

THE STATE OF CALIFORNIA OR ITS OFFICERS OR AGENTS SHALL NOT BE RESPONSIBLE FOR THE ACCURACY OR COMPLETENESS OF SCANNED COPIES OF THIS PLAN SHEET.

NOTES:

1. FOR DETAILS NOT SHOWN, SEE STANDARD PLANS.
2. VERIFY DEPENDENT DIMENSIONS IN THE FIELD BEFORE FABRICATING ANY END CONNECTION TO CONFORM WITH PAVEMENT.
3. WHEN END SECTION IS CALLED FOR, MODIFY TYPICAL TERMINAL SECTION TO FIT. SEE DETAIL E.
4. FOR WB CONNECTION, SEE STANDARD PLAN RSP A77J4.
5. ALL PLATES AND BOLTS TO BE GALVANIZED.
6. CUT AND REMOVE THAT PORTION OF TYPE 9, 9-11 AND BAGR AS REQUIRED. REMAINING RAIL MUST SPAN AT LEAST TWO POSTS.
7. TAPER THE TOP OF THE END OF THE BRIDGE RAILING AT 4:1 TO MATCH THE TOP ELEVATION OF THE THRIE BEAM RAIL ELEMENT.
8. EXISTING UTILITY FACILITIES HAVE NOT BEEN POSITIVELY IDENTIFIED.

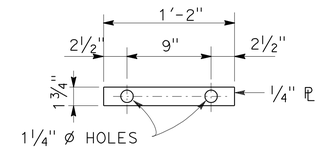

DETAIL H

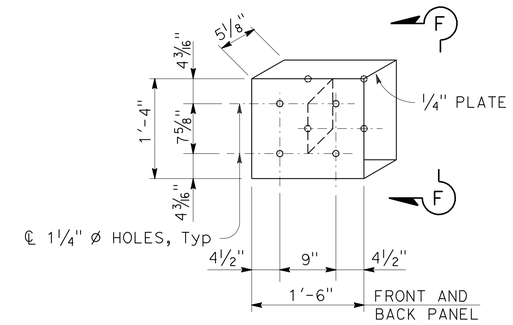

DETAIL E

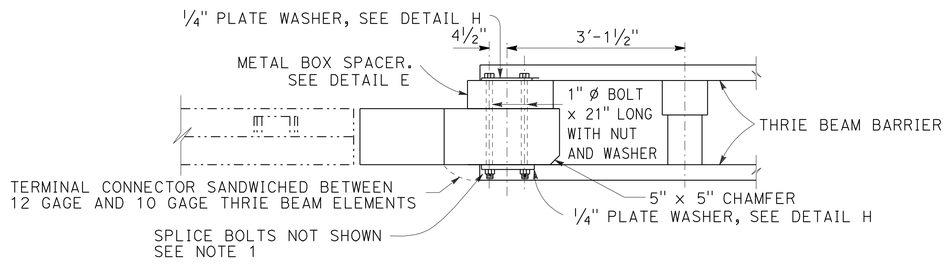

PLAN

* 5" x 5" CHAMFER

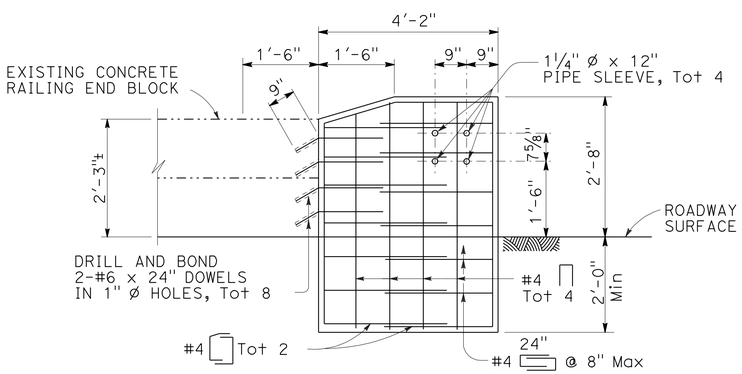

ALTERNATIVE 1

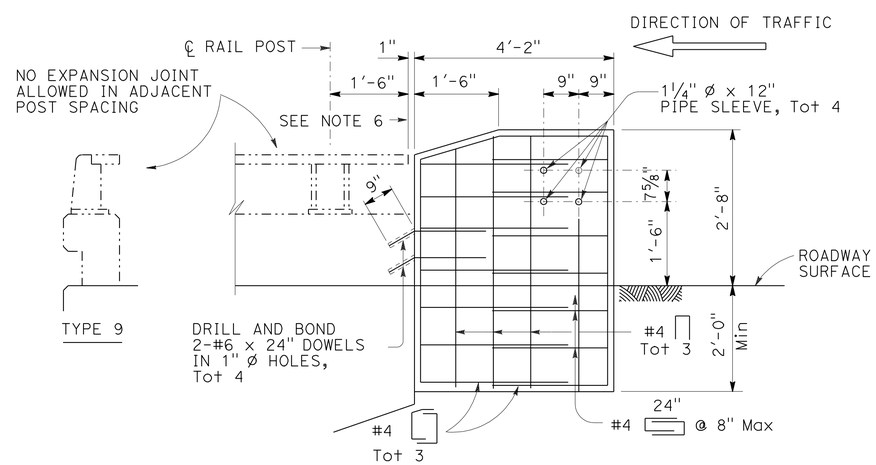

ELEVATION

ALTERNATIVE 2

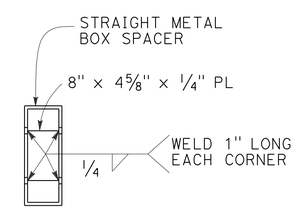

VIEW F-F

ANCHOR BLOCK FOR EXISTING BARRIER RAILING (TYPE 9)

"B1" 295+41 (NB Lt AND Rt), "B1" 296+54 (SB Lt AND Rt), "B1" 415+02 (SB Lt AND Rt)

CONSTRUCTION DETAILS

NO SCALE

C-6

REVISED BY | DATE REVISED
LORI EWENS | APOLINARIO VIVIT
CALCULATED-DESIGNED BY | CHECKED BY
FUNCTIONAL SUPERVISOR | APOLINARIO VIVIT

STATE OF CALIFORNIA - DEPARTMENT OF TRANSPORTATION
Caltrans DESIGN

P:\proj1\02\3E750_plans\pse\23e750gd006.dgn

LAST REVISION 05-27-11 | DATE PLOTTED => 01-JUN-2011 | TIME PLOTTED => 09:53

Dist	COUNTY	ROUTE	POST MILES TOTAL PROJECT	SHEET No.	TOTAL SHEETS
02	Sis	5	R19.0/R25.3	39	149

Roy S Cahill 05-26-11
REGISTERED CIVIL ENGINEER DATE

05-27-11
PLANS APPROVAL DATE

REGISTERED PROFESSIONAL ENGINEER ROY S. CAHILL No. C48876 Exp. 09-30-12 CIVIL STATE OF CALIFORNIA

THE STATE OF CALIFORNIA OR ITS OFFICERS OR AGENTS SHALL NOT BE RESPONSIBLE FOR THE ACCURACY OR COMPLETENESS OF SCANNED COPIES OF THIS PLAN SHEET.

NOTES:

1. DIMENSIONS OF THE STRUCTURAL SECTIONS ARE SUBJECT TO TOLERANCES SPECIFIED IN THE STANDARD SPECIFICATIONS.
2. SUPERELEVATIONS AS SHOWN OR AS DIRECTED BY THE ENGINEER.
3. CROSS SLOPES AS SHOWN OR AS DIRECTED BY THE ENGINEER.
4. REMOVE AC SURFACING APPLIES TO THE FULL WIDTH OF THE EXISTING AC PAVEMENT.
5. NO RUMBLE STRIP OR PAVEMENT MARKERS SHALL BE PLACED ON THE POLYESTER CONCRETE OVERLAYS.
6. REMOVE AC SURFACING WILL ALSO REMOVE PREFORMED MEMBRANE DECK SEAL.
7. THE CONTRACTOR SHALL VERIFY ALL CONTROLLING FIELD DIMENSIONS BEFORE ORDERING OR FABRICATING ANY MATERIAL.
8. EXISTING UTILITY FACILITIES HAVE NOT BEEN POSTIVELY IDENTIFIED.

THE FOLLOWING NOTES APPLY TO JOINT SEAL TYPE B:

9. SEAL MUST SATISFY BOTH MINIMUM MOVEMENT RATING (MR) AND MINIMUM W1 REQUIREMENTS.
10. MINIMUM W1 IS THE CALCULATED MAXIMUM WIDTH OF THE JOINT BASED ON FIELD MEASUREMENTS. AFTER THE JOINTS HAVE BEEN CLEANED, MINIMUM W1 IS TO BE CALCULATED BY THE ENGINEER.
11. W1 SHALL BE THE SMALLER OF THE VALUES DETERMINED AS FOLLOWS:
    A) 0.85 TIMES THE MANUFACTURER'S DESIGNED MINIMUM UNCOMPRESSED WIDTH OF THE SEAL.
    B) THE WIDTH OF THE SEAL ON THE THIRD SUCCESSIVE TEST CYCLE OF THE PRESSURE DEFLECTION TEST, WHEN COMPRESSED TO AN AVERAGE PRESSURE OF 3 PSI.
12. BEND TYPE B JOINT SEAL 6" UP INTO CURB OR RAIL ON THE LOW SIDE OF THE DECK WHERE DECK JOINT MATCHES CURB OR RAIL JOINT.
13. FOR DETAILS NOT SHOWN, SEE RSP B6-21

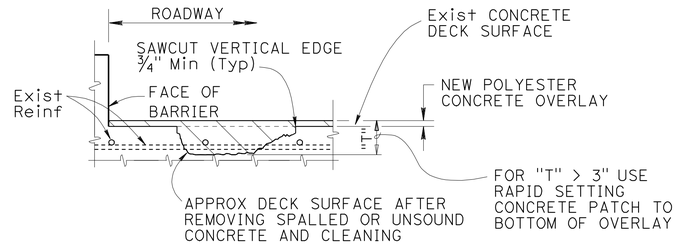

DECK OVERLAY DETAIL

NOTE: UNSOUND CONCRETE LOCATIONS TO BE DETERMINED BY THE ENGINEER. REINFORCEMENT MAY BE ENCOUNTERED DURING DECK CONCRETE REMOVAL.

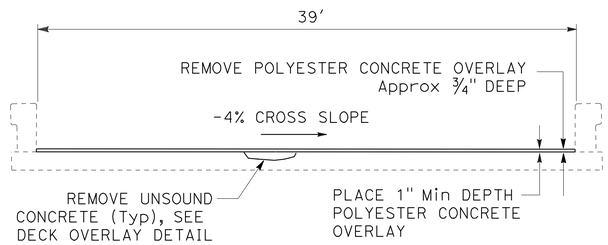

EDGEWOOD UC 02-0136L/R

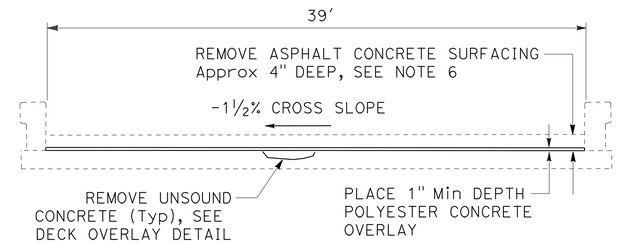

N EDGEWOOD OH 02-0032L

TYPICAL CROSS SECTION POLYESTER CONCRETE OVERLAY

BRIDGE QUANTITIES

PM	BRIDGE No.	BRIDGE NAME	REMOVE AC SURFACING	REMOVE POLYESTER CONCRETE OVERLAY	REMOVE UNSOUND CONCRETE	RAPID SETTING CONCRETE (PATCH)	PREPARE CONCRETE BRIDGE DECK SURFACE	FURNISH POLYESTER CONCRETE OVERLAY	PLACE POLYESTER CONCRETE OVERLAY	CLEAN EXPANSION JOINT	JOINT SEAL (MR ½")
			SQFT	SQFT	CF	CF	SQFT	CF	SQFT	LF	LF
R25.22	02-0032L	N EDGEWOOD OH	8931		67	67	8931	893	8931		
R23.00	02-0136L	EDGEWOOD UC		3387	9	9	3387	339	3387	80	80
R23.00	02-0136R	EDGEWOOD UC		3387	9	9	3387	339	3387	80	80
TOTAL			8931	6774	85	85	15705	1571	15705	160	160

DECK REPAIR TABLE REMOVE UNSOUND CONCRETE AND RAPID SETTING CONCRETE (PATCH)

BRIDGE NAME	BRIDGE NUMBER	APPROXIMATE AREA DAMAGED (PERCENT)	APPROXIMATE DEPTH (INCHES)
N EDGEWOOD OH	02-0032L	3	3
EDGEWOOD UC	02-0136L	1	3
EDGEWOOD UC	02-0136R	1	3

NOTE:
LOCATIONS TO BE DETERMINED BY THE ENGINEER.
FOR DETAILS SEE "DECK OVERLAY DETAIL".

JOINT SEAL TABLE

BRIDGE NUMBER	BRIDGE NAME	LOCATION		MINIMUM "MR" (in)	APPROXIMATE LENGTH (ft)	EXISTING WATERSTOP	APPROX DEPTH TO CLEAN EXP JOINT (in)
02-0136L	EDGEWOOD UC	Abut 1	BB	½"	40	No	12±
		Abut 2	EB	½"	40	No	12±
02-0136R	EDGEWOOD UC	Abut 1	BB	½"	40	No	12±
		Abut 2	EB	½"	40	No	12±

NOTE: ALL JOINT SEALS TO BE TYPE B

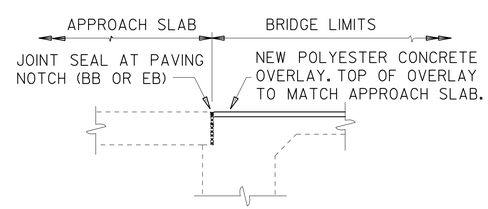

DIAPHRAGM ABUTMENT

EDGEWOOD UC 02-0136L&R

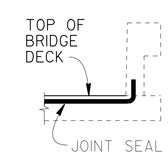

JOINT SEAL LOW SIDE OF DECK

NOTE: DETAIL SHOWN FOR ILLUSTRATION PURPOSES ONLY. FOR USE ONLY WHERE DECK JOINT MATCHES BARRIER RAIL JOINT.

BRIDGE QUANTITIES AND DETAILS

CONSTRUCTION DETAILS

NO SCALE

C-7

REVISED BY | DATE REVISED
ROY CAHILL | APOLINARIO VIVIT
CALCULATED-DESIGNED BY | CHECKED BY
FUNCTIONAL SUPERVISOR | LANCE BROWN
STATE OF CALIFORNIA - DEPARTMENT OF TRANSPORTATION
Caltrans MAINTENANCE
P:\proj1\02\3E750_plans\pse\23e750ga007.dgn

LAST REVISION 05-26-11 | DATE PLOTTED => 01-JUN-2011 | TIME PLOTTED => 09:53

Dist	COUNTY	ROUTE	POST MILES TOTAL PROJECT	SHEET No.	TOTAL SHEETS
02	Sis	5	R19/R25.3	40	149

REGISTERED CIVIL ENGINEER 05-27-11 DATE

05-27-11
PLANS APPROVAL DATE

REGISTERED PROFESSIONAL ENGINEER APOLINARIO W. VIVIT No. C66046 Exp. 06-30-12 CIVIL STATE OF CALIFORNIA

THE STATE OF CALIFORNIA OR ITS OFFICERS OR AGENTS SHALL NOT BE RESPONSIBLE FOR THE ACCURACY OR COMPLETENESS OF SCANNED COPIES OF THIS PLAN SHEET.

NOTES:

1. FINAL LOCATION OF MAINTENANCE PULLOUTS TO BE DETERMINED BY ENGINEER.
2. EXISTING UTILITY FACILITIES HAVE NOT BEEN POSITIVELY LOCATED, AND HAVE NOT BEEN PLOTTED ON PORTIONS OF THESE PLANS.
3. DIMENSIONS SHOWN ARE TO THE EQUIPMENT FOUNDATIONS, FOR EQUIPMENT TYPES AND FUNCTIONS SEE CCTV, SHEET E-2.
4. CONCRETE PAD ONLY FOR NEW CCTV INSTALATION.

ABBREVIATIONS:

SW	MINOR CONCRETE (SIDEWALK)
HMA15	HMA (15% Max RAP, LONG LIFE)

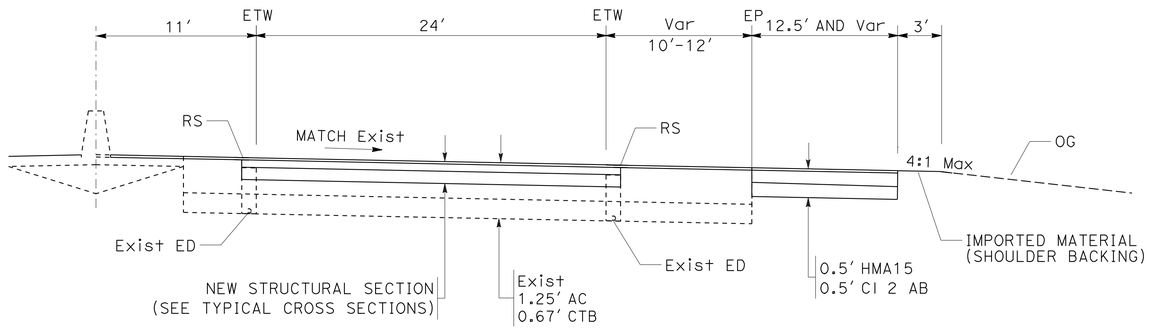

TYPICAL CROSS SECTION
"B1" 175+30.6 TO "B1" 176+20

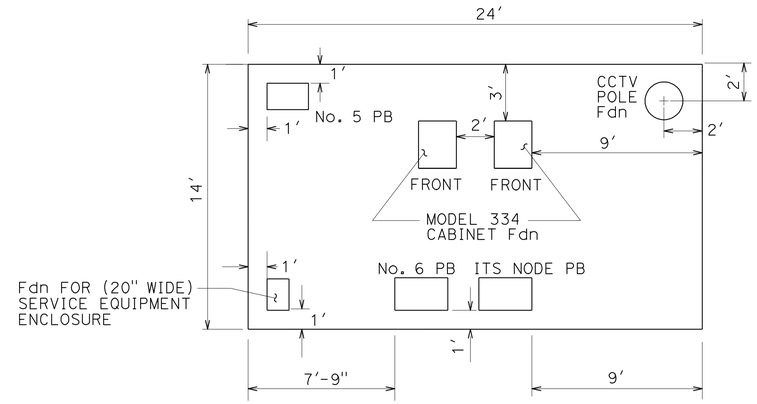

CONTROLLER WALKWAY CCTV
SEE NOTE 3

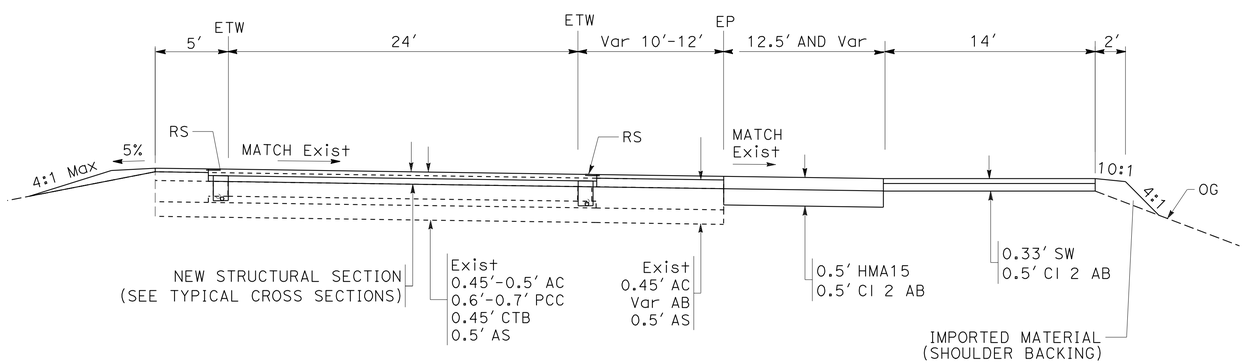

TYPICAL CROSS SECTION
"B1" 119+41.79 TO "B1" 120+30

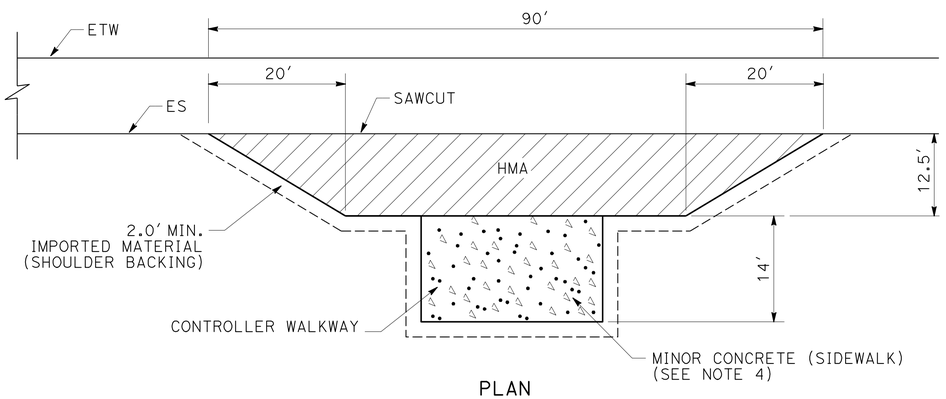

PLAN

NORTHBOUND MAINTENANCE PULLOUTS

CONSTRUCTION DETAILS
NO SCALE

C-8

REVISED BY | DATE REVISED
DELRAE VIOLETTI | APOLINARIO VIVIT
CALCULATED-DESIGNED BY | CHECKED BY
FUNCTIONAL SUPERVISOR: APOLINARIO VIVIT

STATE OF CALIFORNIA - DEPARTMENT OF TRANSPORTATION
Caltrans DESIGN

P:\proj1\02\3E750_plans\pse\23e750ga008.dgn

LAST REVISION 05-27-11 | DATE PLOTTED => 01-JUN-2011 | TIME PLOTTED => 09:54

Dist	COUNTY	ROUTE	POST MILES TOTAL PROJECT	SHEET No.	TOTAL SHEETS
02	Sis	5	R19/R25.3	41	149

REGISTERED CIVIL ENGINEER 05-27-11 DATE

05-27-11
PLANS APPROVAL DATE

REGISTERED PROFESSIONAL ENGINEER APOLINARIO W. VIVIT No. C66046 Exp. 06-30-12 CIVIL STATE OF CALIFORNIA

THE STATE OF CALIFORNIA OR ITS OFFICERS OR AGENTS SHALL NOT BE RESPONSIBLE FOR THE ACCURACY OR COMPLETENESS OF SCANNED COPIES OF THIS PLAN SHEET.

NOTES:

1. TO CONNECT RAILING TO TERMINAL SYSTEM AND TREATMENT, TRANSITION THE TOP OF RAILING HEIGHT AT A RATIO OF 120:1 TO TERMINAL SYSTEM AND TREATMENT HEIGHT PLUS ONE 12'-6" STANDARD RAILING SECTION AT THE TRANSITIONED HEIGHT FOR A HORIZONTAL CONNECTION TO THE END TREATMENT.
2. FOR NOTES AND DETAILS NOT SHOWN SEE STANDARD PLAN A77A1.
3. FOR NOTES AND DETAILS NOT SHOWN SEE STANDARD PLAN A77A2.

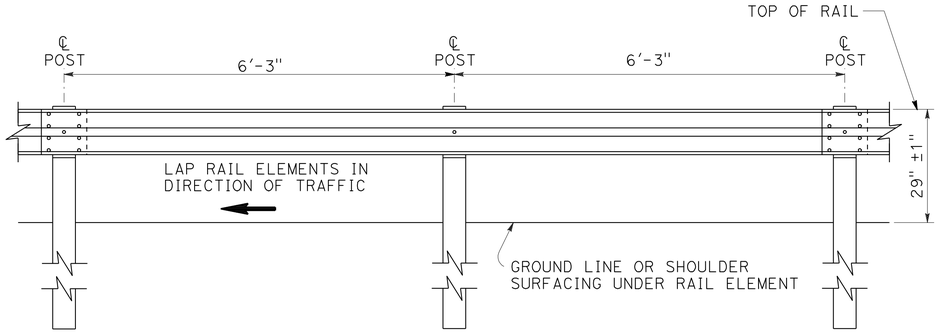

ELEVATION

METAL BEAM GUARD RAILING WITH WOOD POST AND BLOCKS

SEE NOTE 2

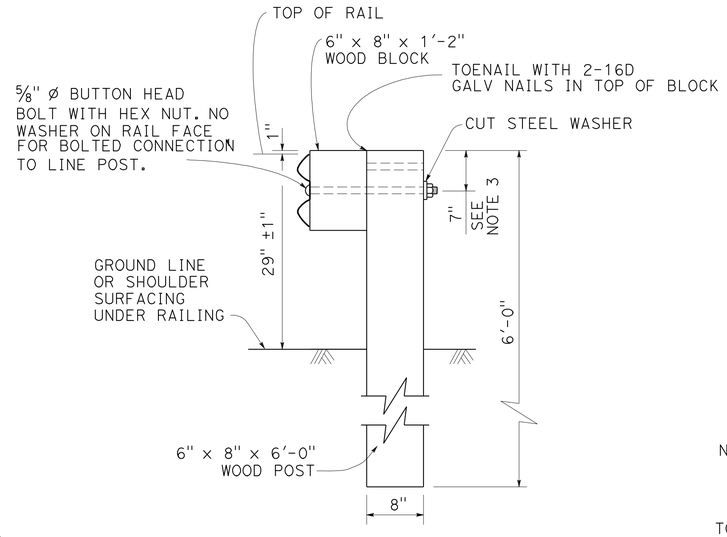

SECTION A-A

TYPICAL WOOD LINE POST INSTALLATION

SEE NOTE 2

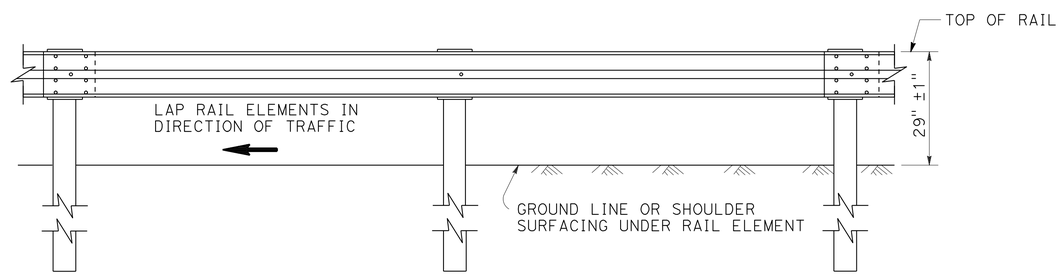

ELEVATION

METAL BEAM GUARD RAILING WITH STEEL POSTS AND NOTCHED WOOD OR NOTCHED RECYCLED PLASTIC BLOCKS

SEE NOTE 3

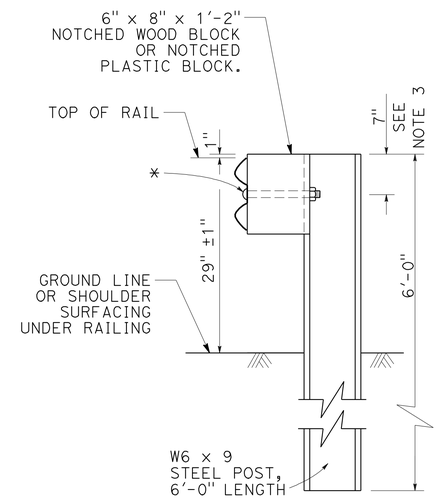

SECTION A-A

TYPICAL STEEL LINE POST INSTALLATION

SEE NOTE 3

* 5/8" Ø BUTTON HEAD BOLT WITH HEX NUT. ATTACH RAIL ELEMENT TO WOOD BLOCK AND STEEL POST WITH BOLT ON TRAFFIC APPROACH SIDE OF POST WEB. NO WASHER ON RAIL FACE FOR BOLTED CONNECTION TO LINE POST.

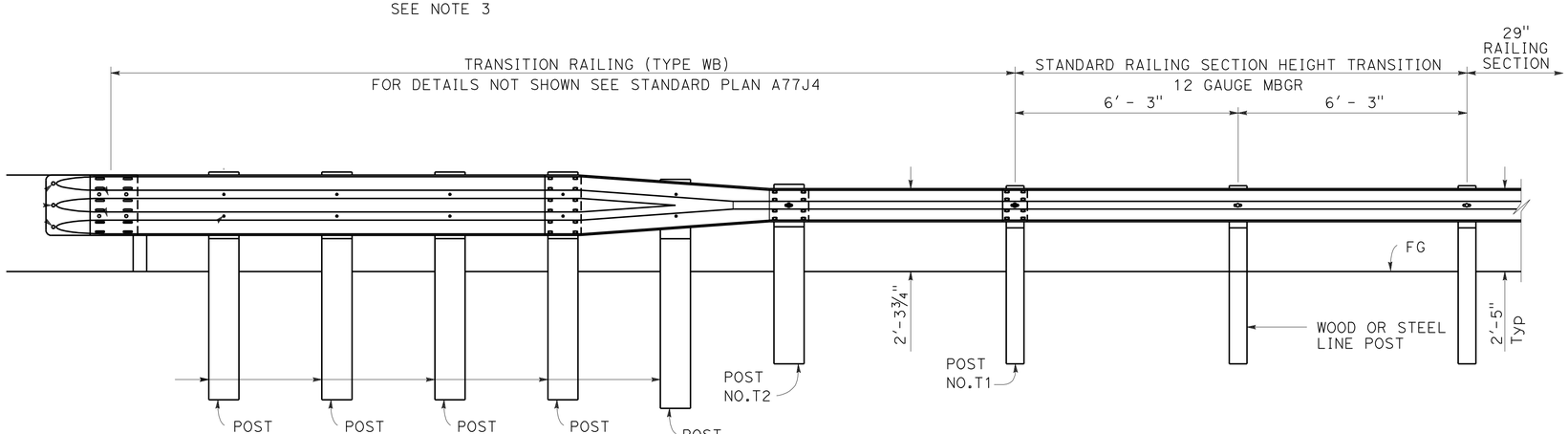

ELEVATION

METAL BEAM GUARD RAILING TO TRANSITION RAILING (TYPE WB) TRANSITION

CONSTRUCTION DETAILS

NO SCALE

C-9

REVISED BY | DATE REVISED
BRIAN STEINER | APOLINARIO W. VIVIT
CALCULATED-DESIGNED BY | CHECKED BY
FUNCTIONAL SUPERVISOR | APOLINARIO VIVIT
STATE OF CALIFORNIA - DEPARTMENT OF TRANSPORTATION
DESIGN
Caltrans®
P:\proj1\02\3E750_plans\pse\23e750ga009.dgn

LAST REVISION 05-27-11 | DATE PLOTTED => 01-JUN-2011 | TIME PLOTTED => 09:54

Dist	COUNTY	ROUTE	POST MILES TOTAL PROJECT	SHEET No.	TOTAL SHEETS
02	Sis	5	R19/R25.3	42	149

REGISTERED CIVIL ENGINEER 05-27-11 DATE

05-27-11
PLANS APPROVAL DATE

REGISTERED PROFESSIONAL ENGINEER
APOLINARIO W. VIVIT
No. C66046
Exp. 06-30-12
CIVIL
STATE OF CALIFORNIA

THE STATE OF CALIFORNIA OR ITS OFFICERS OR AGENTS SHALL NOT BE RESPONSIBLE FOR THE ACCURACY OR COMPLETENESS OF SCANNED COPIES OF THIS PLAN SHEET.

NOTES:

1. DO NOT PLACE SAFETY EDGE WHEN CONCRETE BARRIER OR MBGR IS LESS THAN 1′ FROM EDGE OF SHOULDER.
2. DO NOT PLACE SAFETY EDGE ADJACENT TO GUTTERS OR DITCHES WHERE DISTANCE FROM EDGE OF SHOULDER TO EXISTING HINGE POINT IS LESS THAN 1′.

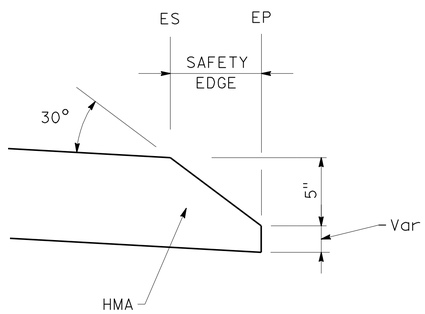

DETAIL A

FOR USE WHEN THE HEIGHT OF SAFETY EDGE IS MORE THAN 5"

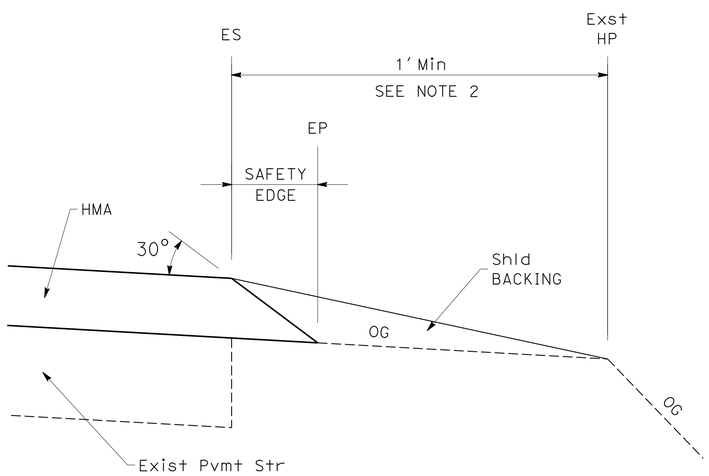

ELEVATION

SAFETY EDGE DETAIL

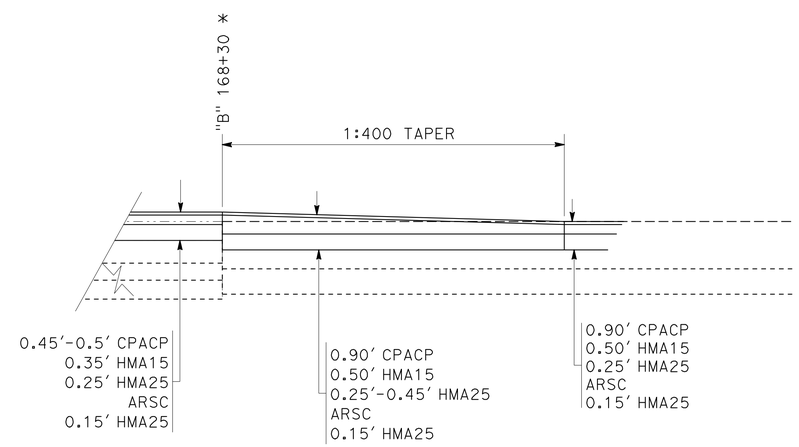

PAVEMENT CONFORM
"B1" 168+30

* STATION WHERE Exist Str Sec WITH PCC ENDS

CONSTRUCTION DETAILS

NO SCALE

C-10

REVISED BY | DATE REVISED
BRIAN STEINER | APOLINARIO VIVIT
CALCULATED-DESIGNED BY | CHECKED BY
FUNCTIONAL SUPERVISOR: APOLINARIO VIVIT
STATE OF CALIFORNIA - DEPARTMENT OF TRANSPORTATION
Caltrans
DESIGN
P:\proj1\02\3E750_plans\pse\23e750ga010.dgn

LAST REVISION 05-27-11 | DATE PLOTTED => 01-JUN-2011 | TIME PLOTTED => 09:54

Dist	COUNTY	ROUTE	POST MILES TOTAL PROJECT	SHEET No.	TOTAL SHEETS
02	Sis	5	R19/R25.3	43	149

REGISTERED CIVIL ENGINEER 05-27-11 DATE

05-27-11
PLANS APPROVAL DATE

REGISTERED PROFESSIONAL ENGINEER APOLINARIO W. VIVIT No. C66046 Exp. 06-30-12 CIVIL STATE OF CALIFORNIA

THE STATE OF CALIFORNIA OR ITS OFFICERS OR AGENTS SHALL NOT BE RESPONSIBLE FOR THE ACCURACY OR COMPLETENESS OF SCANNED COPIES OF THIS PLAN SHEET.

NOTES:

1. VERIFY TYPE AND SIZE OF DI AND DOWNDRAIN BEFORE ORDERING OR FABRICATING MATERIAL.
2. FOR DETAILS NOT SHOWN REFER TO STANDARD PLANS.
3. POSITION MBGR POSTS TO MINIMIZE IMPACTS TO THE PAVED GUTTER FLARE.
4. SLOPE FROM ETW FG Elev TO TOP OF DI Elev.

LEGEND:

COLD PLANE AC Pvmt 1" DEPTH

FLOW DIRECTION

1 DRAINAGE SYSTEM No.

ABBREVIATIONS:

RAP RECLAIMED ASPHALT PAVEMENT

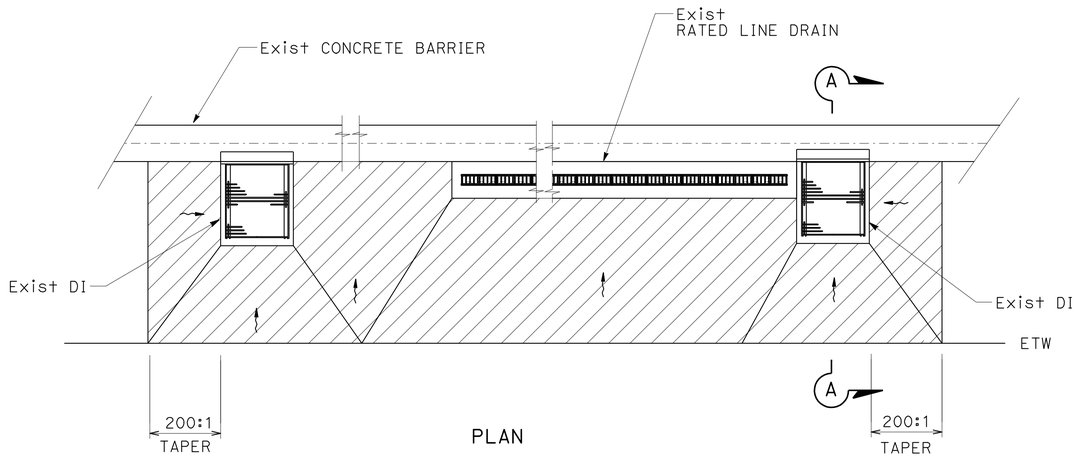

PLAN

PAVE NEXT TO DI AND GRATED LINE DRAIN 1

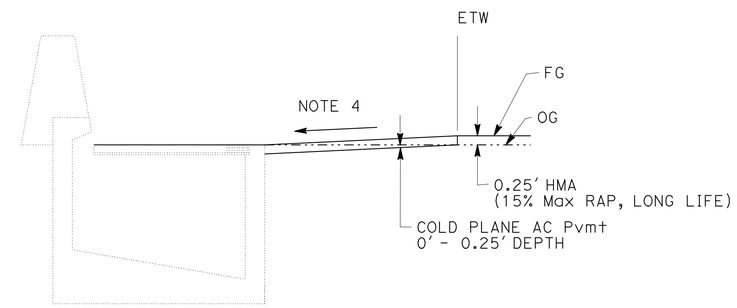

SECTION A-A

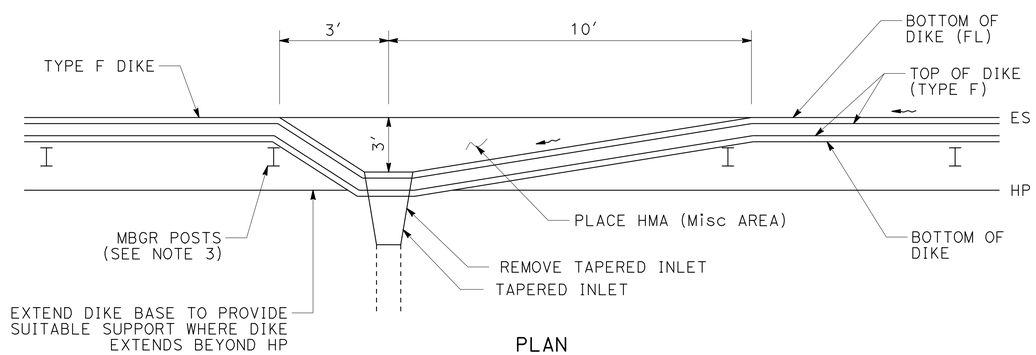

PLAN

PIPE DOWNDRAIN ENTRANCE TAPERS UNDER METAL BEAM GUARD RAIL

4 5 10 12 13 16 21 22 24 26

DRAINAGE DETAILS

NO SCALE **DD-1**

REVISED BY | DATE REVISED
LORI EWENS | APOLINARIO VIVIT
CALCULATED-DESIGNED BY | CHECKED BY
FUNCTIONAL SUPERVISOR | APOLINARIO VIVIT
STATE OF CALIFORNIA - DEPARTMENT OF TRANSPORTATION
Caltrans DESIGN

P:\proj1\02\3E750_plans\pse\23e750ic001.dgn

LAST REVISION 05-27-11 | DATE PLOTTED => 01-JUN-2011 | TIME PLOTTED => 09:54

Dist	COUNTY	ROUTE	POST MILES TOTAL PROJECT	SHEET No.	TOTAL SHEETS
02	Sis	5	R19/R25.3	44	149

REGISTERED CIVIL ENGINEER DATE 05-27-11

PLANS APPROVAL DATE 05-27-11

REGISTERED PROFESSIONAL ENGINEER APOLINARIO W. VIVIT No. C66046 Exp. 06-30-12 CIVIL STATE OF CALIFORNIA

THE STATE OF CALIFORNIA OR ITS OFFICERS OR AGENTS SHALL NOT BE RESPONSIBLE FOR THE ACCURACY OR COMPLETENESS OF SCANNED COPIES OF THIS PLAN SHEET.

NOTES:

1. VERIFY TYPE AND SIZE OF DI AND DOWNDRAIN BEFORE ORDERING OR FABRICATING MATERIAL
2. FOR DETAILS NOT SHOWN REFER TO STANDARD PLANS

LEGEND:

COLD PLANE AC Pvmt

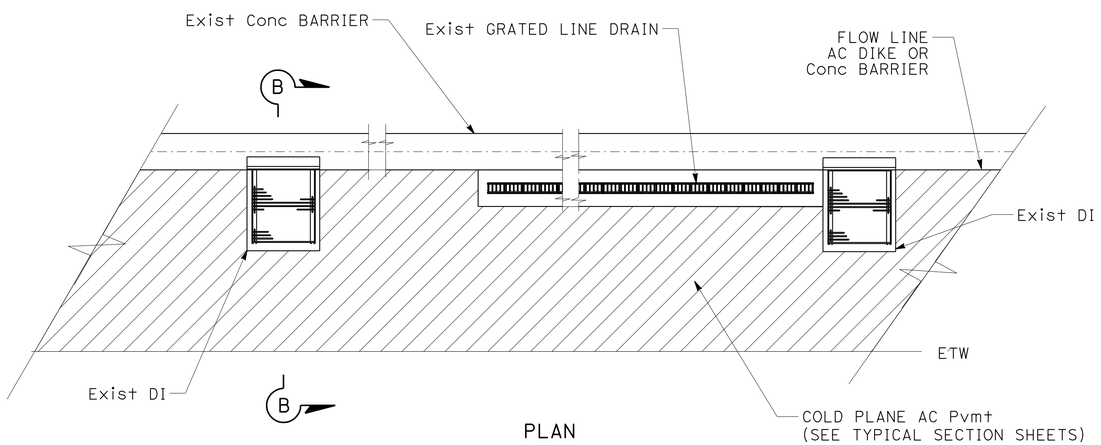

PLAN

PAVE NEXT TO DI AND GRATED LINE DRAIN

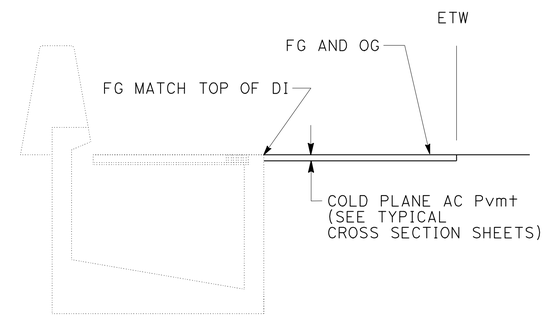

SECTION B-B

2 3 6 7 8 9 11 14 15 17 18 19 20 23 25 27

DRAINAGE DETAILS

NO SCALE **DD-2**

REVISED BY	DATE REVISED
LORI EWENS	APOLINARIO VIVIT
CALCULATED-DESIGNED BY	CHECKED BY
FUNCTIONAL SUPERVISOR	APOLINARIO VIVIT

STATE OF CALIFORNIA - DEPARTMENT OF TRANSPORTATION

Caltrans® **DESIGN**

P:\proj\02\3E750_plans\pse\23e750ic002.dgn

LAST REVISION 05-27-11 | DATE PLOTTED => 01-JUN-2011 | TIME PLOTTED => 09:54

Dist	COUNTY	ROUTE	POST MILES TOTAL PROJECT	SHEET No.	TOTAL SHEETS
02	Sis	5	R19/R25.3	45	149

REGISTERED CIVIL ENGINEER 05-27-11 DATE

05-27-11
PLANS APPROVAL DATE

REGISTERED PROFESSIONAL ENGINEER APOLINARIO W. VIVIT No. C66046 Exp. 06-30-12 CIVIL STATE OF CALIFORNIA

THE STATE OF CALIFORNIA OR ITS OFFICERS OR AGENTS SHALL NOT BE RESPONSIBLE FOR THE ACCURACY OR COMPLETENESS OF SCANNED COPIES OF THIS PLAN SHEET.

NOTES:

1. (N) - NOT A SEPARATE PAY ITEM, FOR INFORMATION ONLY.
2. "SHOULDER" REFERS TO THE OUTSIDE SHOULDERS, "MEDIAN" REFERS TO THE MEDIAN SHOULDER.

DRAINAGE QUANTITIES

"B1" LINE STATION		LOCATION (SEE NOTE 2)	SHEET No.	DRAINAGE SYSTEM ⬡	DRAINAGE UNIT ◯	INLET TYPE	PLACE HMA (Misc AREA) SQYD	REMOVE TAPERED INLET EA	18" TAPERED INLET EA	REMARKS	DRAINAGE SYSTEM ⬡	DRAINAGE UNIT ◯
NORTHBOUND												
FROM	TO											
162+23	164+23	MEDIAN	L6	1	a					PAVE NEXT TO GRATED LINE DRAIN (N)	1	a
					b	GDO				PAVE NEXT TO DI (N)		b
					c	GDO				PAVE NEXT TO DI (N)		c
179+63	180+68	MEDIAN	L7	3	a	GDO				PAVE NEXT TO DI (N)	3	a
					b					PAVE NEXT TO GRATED LINE DRAIN (N)		b
					c	GDO				PAVE NEXT TO DI (N)		c
184+80		Shld	L7	4			2.2	1	1	PIPE DD ENTRANCE TAPER	4	
188+29		Shld	L8	5			2.2	1	1	PIPE DD ENTRANCE TAPER	5	
192+80		MEDIAN	L8	6		GDO				PAVE NEXT TO DI (N)	6	
198+84	200+00	MEDIAN	L9	7	a	GDO				PAVE NEXT TO DI (N)	7	a
					b					PAVE NEXT TO GRATED LINE DRAIN (N)		b
					c	GDO				PAVE NEXT TO DI (N)		c
201+77		MEDIAN	L9	8		GDO				PAVE NEXT TO DI (N)	8	
206+76		Shld	L9	9		GDO				PAVE NEXT TO DI (N)	9	
212+28		Shld	L9	11		GDO				PAVE NEXT TO DI (N)	11	
225+35		Shld	L10	12			2.2	1	1	PIPE DD ENTRANCE TAPER	12	
226+28		Shld	L11	14	b	GDO				PAVE NEXT TO DI (N)	14	
234+27		Shld	L11	16						PIPE DD ENTRANCE TAPER	16	
237+80		Shld	L12	17	d	GDO				PAVE NEXT TO DI (N)	17	
258+43		Shld	L13	19		GDO				PAVE NEXT TO DI (N)	19	
263+00		Shld	L14	20	a	GDO				PAVE NEXT TO DI (N)	20	
266+93		MEDIAN	L14	23		GDO				PAVE NEXT TO DI (N)	23	
270+17		MEDIAN	L14	25		GDO				PAVE NEXT TO DI (N)	25	
274+32		MEDIAN	L15	27		GDO				PAVE NEXT TO DI (N)	27	
SOUTHBOUND												
179+31		Shld	L7	2		GDO				PAVE NEXT TO DI (N)	2	
212+15		Shld	L9	10			2.2	1	1	PIPE DD ENTRANCE TAPER	10	
225+42		Shld	L10	13			2.2	1	1	PIPE DD ENTRANCE TAPER	13	
226+28		MEDIAN	L11	14	a	GDO				PAVE NEXT TO DI (N)	14	
233+30		Shld	L11	15		GDO				PAVE NEXT TO DI (N)	15	
237+79	239+39	MEDIAN	L12	17	a	GDO				PAVE NEXT TO DI (N)	17	a
					b					PAVE NEXT TO GRATED LINE DRAIN (N)		b
					c	GDO				PAVE NEXT TO DI (N)		c
255+06		MEDIAN	L13	18		GDO				PAVE NEXT TO DI (N)	18	
261+21	263+00	MEDIAN	L14	20	b	GDO				PAVE NEXT TO DI (N)	19	b
					c					PAVE NEXT TO GRATED LINE DRAIN (N)		c
					d	GDO				PAVE NEXT TO DI (N)		d
265+43		Shld	L14	21			2.2	1	1	PIPE DD ENTRANCE TAPER	21	
266+82		Shld	L14	22			2.2	1	1	PIPE DD ENTRANCE TAPER	22	
270+06		Shld	L14	24			2.2	1	1	PIPE DD ENTRANCE TAPER	24	
274+21		Shld	L15	26			2.2	1	1	PIPE DD ENTRANCE TAPER	26	
TOTAL							19.8	9	9			

DRAINAGE QUANTITIES
DQ-1

REVISED BY | DATE REVISED
LORI EWENS | APOLINARIO VIVIT
CALCULATED-DESIGNED BY | CHECKED BY
FUNCTIONAL SUPERVISOR: APOLINARIO VIVIT

STATE OF CALIFORNIA - DEPARTMENT OF TRANSPORTATION
Caltrans
DESIGN

P:\proj1\02\3E750_plans\pse\23e750id001.dgn

LAST REVISION 05-27-11 | DATE PLOTTED => 01-JUN-2011 | TIME PLOTTED => 09:54

Dist	COUNTY	ROUTE	POST MILES TOTAL PROJECT	SHEET No.	TOTAL SHEETS
02	Sis	5	R19/R25.3	46	149

REGISTERED CIVIL ENGINEER 05-27-11 DATE

05-27-11
PLANS APPROVAL DATE

REGISTERED PROFESSIONAL ENGINEER APOLINARIO W. VIVIT No. C66046 Exp. 06-30-12 CIVIL STATE OF CALIFORNIA

THE STATE OF CALIFORNIA OR ITS OFFICERS OR AGENTS SHALL NOT BE RESPONSIBLE FOR THE ACCURACY OR COMPLETENESS OF SCANNED COPIES OF THIS PLAN SHEET.

EDGE DRAIN QUANTITIES SUMMARY

STATION	R+\L+ INSIDE\OUTSIDE SHOULDER	3" PLASTIC PIPE (EDGE DRAIN)	3" PLASTIC PIPE (EDGE DRAIN OUTLET) OUTLET LENGTH	OUTLET TYPE	VENT LENGTH	VENT TYPE	CLEAN OUT LENGTH	CLEAN OUT TYPE	PAVEMENT MARKER (NON-REFLECTIVE-RECESSED)	DELINEATOR (CLASS 2)	FLUSH EXISTING EDGE DRAINS	REMARKS
		LF	LF		LF		LF		EA	EA	LF	
"B1" 107+70	R+\OUTSIDE				18	C			1	1		Emb
		330										
"B1" 110+90	R+\OUTSIDE		50	A	20	C			1	1		Emb
		355										
"B1" 114+40	R+\OUTSIDE		56	A	26	C			1	1		Emb
		195										
"B1" 116+60	R+\OUTSIDE		20	D	20	C			1			DI
		355										
"B1" 119+90	R+\OUTSIDE						27	TYPE 2	1			
		352										
"B1" 123+30	R+\OUTSIDE		60	A	30	C			1			
		348										
"B1" 126+70	R+\OUTSIDE		54	A	24	C			1			
		350										
"B1" 130+10	R+\OUTSIDE		54	A	24	C			1	1		
		250										
"B1" 132+60	R+\OUTSIDE		44	C	44	C			1	1		GUTTER
		355										
"B1" 135+15	R+\OUTSIDE		32	C	32	C			1	1		GORE
		345										
"B1" 139+75	R+\OUTSIDE		54	A	24	C			1			Emb
		355										
"B1" 143+45	R+\OUTSIDE		54	A	24	C			1			Emb
		250										
"B1" 146+10	R+\OUTSIDE		56	A	26	C			1			Emb
		165										
SUBTOTAL		4005	534		312		27		13	6		

EDGE DRAIN QUANTITIES SUMMARY

STATION	R+\L+ INSIDE\OUTSIDE SHOULDER	3" PLASTIC PIPE (EDGE DRAIN)	3" PLASTIC PIPE (EDGE DRAIN OUTLET) OUTLET LENGTH	OUTLET TYPE	VENT LENGTH	VENT TYPE	CLEAN OUT LENGTH	CLEAN OUT TYPE	PAVEMENT MARKER (NON-REFLECTIVE-RECESSED)	DELINEATOR (CLASS 2)	FLUSH EXISTING EDGE DRAINS	REMARKS
		LF	LF		LF		LF		EA	EA	LF	
"B1" 147+70	R+\OUTSIDE		56	A					1			Emb
"B1" 149+40	R+\OUTSIDE				26	C			1			Emb
		338										
"B1" 152+85	R+\OUTSIDE		50	A	20	C			1			Emb
		345										
"B1" 156+40	R+\OUTSIDE		50	A	20	C			1			Emb
		300										
"B1" 159+50	R+\OUTSIDE		24	C	24	C			1	1		GORE\SAG
		320										
"B1" 162+70	R+\OUTSIDE		46	A					1	1		Emb
"B1" 107+50	R+\INSIDE				30	F			1	1		GUTTER
		318										
"B1" 110+65	R+\INSIDE		30		30	F			1	1		GUTTER
		300										
"B1" 113+60	R+\INSIDE		30	D	30	C			1			DI
		400										
"B1" 117+55	R+\INSIDE		30	D	30	C			1			DI
		400										
"B1" 121+50	R+\INSIDE		25	C	25	C			1			
		400										
"B1" 126+40	R+\INSIDE		12	D	12	C			1			DI\SKEWED
		250										
"B1" 127+90	R+\INSIDE				16	F			1	1		GUTTER
SUBTOTAL		3371	353		263				13	5		
SHEET TOTAL		7376	887		575		27		26	11		

DRAINAGE QUANTITIES
DQ-2

STEVE ALAWAR — REVISED BY
APOLINARIO VIVIT — DATE REVISED
CALCULATED-DESIGNED BY
CHECKED BY
FUNCTIONAL SUPERVISOR
APOLINARIO VIVIT

STATE OF CALIFORNIA - DEPARTMENT OF TRANSPORTATION
Caltrans DESIGN

P:\proj1\02\3E750_plans\pse\23e750id002.dgn

LAST REVISION 05-27-11 | DATE PLOTTED => 01-JUN-2011 | TIME PLOTTED => 09:54

Dist	COUNTY	ROUTE	POST MILES TOTAL PROJECT	SHEET No.	TOTAL SHEETS
02	Sis	5	R19/R25.3	47	149

REGISTERED CIVIL ENGINEER DATE 05-27-11

05-27-11
PLANS APPROVAL DATE

REGISTERED PROFESSIONAL ENGINEER APOLINARIO W. VIVIT No. C66046 Exp. 06-30-12 CIVIL STATE OF CALIFORNIA

THE STATE OF CALIFORNIA OR ITS OFFICERS OR AGENTS SHALL NOT BE RESPONSIBLE FOR THE ACCURACY OR COMPLETENESS OF SCANNED COPIES OF THIS PLAN SHEET.

EDGE DRAIN QUANTITIES SUMMARY

STATION	R+\L+ INSIDE\OUTSIDE SHOULDER	3" PLASTIC PIPE (EDGE DRAIN)	3" PLASTIC PIPE (EDGE DRAIN OUTLET) OUTLET LENGTH	OUTLET TYPE	VENT LENGTH	VENT TYPE	CLEAN OUT LENGTH	CLEAN OUT TYPE	PAVEMENT MARKER (NON-REFLECTIVE RECESSED)	DELINEATOR (CLASS 2)	FLUSH EXISTING EDGE DRAINS	REMARKS
		LF	LF		LF		LF		EA	EA	LF	
"B1" 107+10	L+\OUTSIDE				18	C			1			Emb
		295										
"B1" 110+15	L+\OUTSIDE		48	A	18	C			1			Emb
		350										
"B1" 113+60	L+\OUTSIDE		18	D	18	C			1			DI
		355										
"B1" 117+30	L+\OUTSIDE		32	C	32	C			1	1		GUTTER
		345										
"B1" 120+80	L+\OUTSIDE		32	C	32	C			1	1		GUTTER
		355										
"B1" 124+50	L+\OUTSIDE		28	C	28	C			1	1		GUTTER
		345										
"B1" 128+10	L+\OUTSIDE		34	C	34	C			1	1		GUTTER
		345										
"B1" 131+60	L+\OUTSIDE		40	C	40	C			1	1		GUTTER
		350										
"B1" 135+15	L+\OUTSIDE						7	2	1	1		
		350										
"B1" 138+60	L+\OUTSIDE		44	A	24	C			1			Emb
		355										
"B1" 142+00	L+\OUTSIDE		44	A	24	C			1			Emb
		345										
"B1" 145+40	L+\OUTSIDE		44	A	24	C			1			Emb
		203										
"B1" 147+30	L+\OUTSIDE		44	A					1			Emb
"B1" 149+40	L+\OUTSIDE				24	C			1			Emb
		333										
"B1" 152+65	L+\OUTSIDE		44	A	24	C			1			Emb
		338										
"B1" 155+91	L+\OUTSIDE		44	A	24	C			1			Emb
		339										
"B1" 159+24	L+\OUTSIDE						7	2	1	1		GORE
		196										
"B1" 161+18	L+\OUTSIDE		35/35	D					1	1		DI
		303										
"B1" 164+24	L+\OUTSIDE		12	D					1			D1
SUBTOTAL		5552	578		364		14		19	8		

EDGE DRAIN QUANTITIES SUMMARY

STATION	R+\L+ INSIDE\OUTSIDE SHOULDER	3" PLASTIC PIPE (EDGE DRAIN)	3" PLASTIC PIPE (EDGE DRAIN OUTLET) OUTLET LENGTH	OUTLET TYPE	VENT LENGTH	VENT TYPE	CLEAN OUT LENGTH	CLEAN OUT TYPE	PAVEMENT MARKER (NON-REFLECTIVE RECESSED)	DELINEATOR (CLASS 2)	FLUSH EXISTING EDGE DRAINS	REMARKS
		LF	LF		LF		LF		EA	EA	LF	
"B1" 133+30	L+\INSIDE				63	C			1			DI\SAG
		365										
"B1" 136+80	L+\INSIDE		40	C	40	C			1	1		GUTTER
		365										
"B1" 140+40	L+\INSIDE		57	C	57	C			1			DI
		250										
"B1" 142+70	L+\INSIDE						5	2	1	1		
		250										
"B1" 145+20	L+\INSIDE						5	2	1	1		
		247										
"B1" 147+60	L+\INSIDE		46	C					1	1		GUTTER
"B1" 159+75 TO "B1" 180+69	R+\INSIDE										2094	
"B1" 164+24 TO "B1" 225+44	L+\OUTSIDE										6120	
"B1" 180+75 TO "B1" 189+24	R+\OUTSIDE										849	
"B1" 188+29 TO "B1" 201+77	R+\INSIDE										1348	
"B1" 200+05 TO "B1" 268+92	R+\OUTSIDE										6887	
"B1" 225+25 TO "B1" 262+96	L+\INSIDE										3771	
"B1" 262+60 TO "B1" 274+31	L+\OUTSIDE										1171	
"B1" 266+00 TO "B1" 275+48	R+\INSIDE										948	
SUBTOTAL		1477	143		160		10		6	4		
SHEET TOTAL		7029	721		524		24		25	12	23,188	

DRAINAGE QUANTITIES
DQ-3

STATE OF CALIFORNIA - DEPARTMENT OF TRANSPORTATION
DESIGN

STEVE ALAWAR | REVISED BY | APOLINARIO VIVIT | DATE REVISED
CALCULATED-DESIGNED BY | CHECKED BY
FUNCTIONAL SUPERVISOR: APOLINARIO VIVIT

P:\proj1\02\3E750_plans\pse\23e750id003.dgn

LAST REVISION 05-27-11 | DATE PLOTTED => 01-JUN-2011 | TIME PLOTTED => 09:54

Dist	COUNTY	ROUTE	POST MILES TOTAL PROJECT	SHEET No.	TOTAL SHEETS
02	Sis	5	R19/R25.3	48	149

REGISTERED CIVIL ENGINEER 05-27-11 DATE

05-27-11
PLANS APPROVAL DATE

REGISTERED PROFESSIONAL ENGINEER APOLINARIO W. VIVIT No. C66046 Exp. 06-30-12 CIVIL STATE OF CALIFORNIA

THE STATE OF CALIFORNIA OR ITS OFFICERS OR AGENTS SHALL NOT BE RESPONSIBLE FOR THE ACCURACY OR COMPLETENESS OF SCANNED COPIES OF THIS PLAN SHEET.

EDGE DRAIN QUANTITIES SUMMARY

STATION	R+\L+ INSIDE\OUTSIDE SHOULDER	3" PLASTIC PIPE (EDGE DRAIN)	3" PLASTIC PIPE (EDGE DRAIN OUTLET) OUTLET LENGTH	OUTLET TYPE	VENT LENGTH	VENT TYPE	CLEAN OUT LENGTH	CLEAN OUT TYPE	PAVEMENT MARKER (NON-REFLECTIVE-RECESSED)	DELINEATOR (CLASS 2)	FLUSH EXISTING EDGE DRAINS	REMARKS
		LF	LF		LF		LF		EA	EA	LF	
"B1" 277+65	R+/OUTSIDE											BEGIN AT END BRIDGE
		24										
"B1" 277+90	R+/OUTSIDE		20	C	20	C				1		
		302										
"B1" 280+90	R+/OUTSIDE		25	C	25	C			1	1		
		250										
"B1" 283+35	R+/OUTSIDE		30	C	30	C			1	1		
		224										
"B1" 285+60	R+/OUTSIDE		40\40	C					1	1		GUTTER-SAG
		201										
"B1" 287+65	R+/OUTSIDE		55	C	55	C			1	1		
		225										
"B1" 289+90	R+/OUTSIDE		30	C	30	C			1	1		
		200										
"B1" 291+95	R+/OUTSIDE		25	C	25	C			1	1		
		200										
"B1" 294+00	R+/OUTSIDE		25	C	25	C			1	1		
		140										
"B1" 295+40	R+/OUTSIDE		15	C	15	C			1	1		
		18										END AT BEGIN BRIDGE
"B1" 296+65	R+/OUTSIDE		15	C	15	C			1	1		BEGIN AT END BRIDGE
		133										
"B1" 298+05	R+/OUTSIDE		30	C	30	C			1	1		
		200										
"B1" 300+05	R+/OUTSIDE		30	C	30	C			1	1		
		200										
"B1" 302+10	R+/OUTSIDE		30	C	30	C			1	1		
		200										
"B1" 304+10	R+/OUTSIDE		30	C	30	C			1	1		
		200										
"B1" 306+10	R+/OUTSIDE		50	C	50	C			1	1		
		300										
"B1" 309+05	R+/OUTSIDE		40	C	40	C			1	1		
		300										
"B1" 312+00	R+/OUTSIDE		40	C	40	C			1	1		
		200										
"B1" 313+95	R+/OUTSIDE		40	C	40	C			1	1		
		200										
"B1" 315+90	R+/OUTSIDE		30	C	30	C			1	1		
		200										
"B1" 317+90	R+/OUTSIDE		30	C	30	C			1	1		
		200										
"B1" 319+85	R+/OUTSIDE		25	C	25	C			1	1		
		200										
"B1" 321+80	R+/OUTSIDE		25	C	25	C			1	1		
		200										
"B1" 323+75	R+/OUTSIDE		25	C	25	C			1	1		
		200										
"B1" 325+70	R+/OUTSIDE		25	C	25	C			1	1		
		200										
"B1" 327+70	R+/OUTSIDE		25	C	25	C			1	1		
		200										
	SUBTOTAL	4917	795		715				24	25		

EDGE DRAIN QUANTITIES SUMMARY

STATION	R+\L+ INSIDE\OUTSIDE SHOULDER	3" PLASTIC PIPE (EDGE DRAIN)	3" PLASTIC PIPE (EDGE DRAIN OUTLET) OUTLET LENGTH	OUTLET TYPE	VENT LENGTH	VENT TYPE	CLEAN OUT LENGTH	CLEAN OUT TYPE	PAVEMENT MARKER (NON-REFLECTIVE RECESSED)	DELINEATOR (CLASS 2)	FLUSH EXISTING EDGE DRAINS	REMARKS
		LF	LF		LF		LF		EA	EA	LF	
"B1" 329+70	R+/OUTSIDE		25	C	25	C			1	1		
		200										
"B1" 331+80	R+/OUTSIDE		25	C	25	C			1	1		
		200										
"B1" 333+85	R+/OUTSIDE		25	C	25	C			1	1		
		250										
"B1" 336+45	R+/OUTSIDE		25	C	25	C			1	1		
		250										
"B1" 339+05	R+/OUTSIDE		25	D	25	C			1	1		
		250										
"B1" 341+65	R+/OUTSIDE		25	C	25	C			1	1		DI
		250										
"B1" 344+20	R+/OUTSIDE		25	C	25	C			1	1		
		300										
"B1" 347+25	R+/OUTSIDE		25	C	25	C			1	1		
		300										
"B1" 350+25	R+/OUTSIDE		25	C	25	C			1	1		
		300										
"B1" 353+25	R+/OUTSIDE		30	C	30	C			1	1		
		200										
"B1" 355+25	R+/OUTSIDE		35	C	35	C			1	1		
		200										
"B1" 357+25	R+/OUTSIDE		35	C	35	C			1	1		
		200										
"B1" 359+25	R+/OUTSIDE		35	C	35	C			1	1		
		300										
"B1" 362+25	R+/OUTSIDE		35	C	35	C			1	1		
		300										
"B1" 365+25	R+/OUTSIDE		35	C	35	C			1	1		
		300										
"B1" 368+25	R+/OUTSIDE		35	C	35	C			1	1		
		300										
"B1" 371+25	R+/OUTSIDE		35	C	35	C			1	1		
		300										
"B1" 374+25	R+/OUTSIDE		35	C	35	C			1	1		
		300										
"B1" 377+25	R+/OUTSIDE		35	C	35	C			1	1		
		300										
"B1" 380+25	R+/OUTSIDE		35	C	35	C			1	1		
	SUBTOTAL	5000	605		605				20	20		
	SHEET TOTAL	9917	1400		1320				44	45		

DRAINAGE QUANTITIES
DQ-4

REVISED BY | DATE REVISED
ROD ESTES | APOLINARIO W. VIVIT
CALCULATED-DESIGNED BY | CHECKED BY
FUNCTIONAL SUPERVISOR | APOLINARIO VIVIT

STATE OF CALIFORNIA - DEPARTMENT OF TRANSPORTATION
Caltrans® DESIGN

P:\proj1\02\3E750_plans\pse\23e750id004.dgn

LAST REVISION 05-27-11 | DATE PLOTTED => 01-JUN-2011 | TIME PLOTTED => 09:55

Dist	COUNTY	ROUTE	POST MILES TOTAL PROJECT	SHEET No.	TOTAL SHEETS
02	Sis	5	R19/R25.3	49	149

REGISTERED CIVIL ENGINEER 05-27-11 DATE

05-27-11
PLANS APPROVAL DATE

REGISTERED PROFESSIONAL ENGINEER
APOLINARIO W. VIVIT
No. C66046
Exp. 06-30-12
CIVIL
STATE OF CALIFORNIA

THE STATE OF CALIFORNIA OR ITS OFFICERS OR AGENTS SHALL NOT BE RESPONSIBLE FOR THE ACCURACY OR COMPLETENESS OF SCANNED COPIES OF THIS PLAN SHEET.

EDGE DRAIN QUANTITIES SUMMARY

STATION	R+\L+ INSIDE\OUTSIDE SHOULDER	3" PLASTIC PIPE (EDGE DRAIN)	3" PLASTIC PIPE (EDGE DRAIN OUTLET) OUTLET LENGTH	OUTLET TYPE	VENT LENGTH	VENT TYPE	CLEAN OUT LENGTH	CLEAN OUT TYPE	PAVEMENT MARKER (NON-REFLECTIVE RECESSED)	DELINEATOR (CLASS 2)	FLUSH EXISTING EDGE DRAINS	REMARKS
		LF	LF		LF		LF		EA	EA	LF	
		200										
"B1" 382+25	R+/OUTSIDE		35	C	35	C			1	1		
		300										
"B1" 385+25	R+/OUTSIDE		35	C	35	C			1	1		
		300										
"B1" 388+20	R+/OUTSIDE		35	C	35	C			1	1		
		300										
"B1" 391+20	R+/OUTSIDE		35	C	35	C			1	1		
		236										
"B1" 393+55	R+/OUTSIDE		35	C	35	C			1	1		
		284										
"B1" 396+35	R+/OUTSIDE		35	C	35	C			1	1		
		95										
"B1" 397+30	R+/OUTSIDE		35	C	35	C			1	1		
		160										
"B1" 398+90	R+/OUTSIDE		35	C	35	C			1	1		
		225										
"B1" 401+15	R+/OUTSIDE		35	C	35	C			1	1		
		200										
"B1" 403+15	R+/OUTSIDE		40	A	20	C			1	1		
		200										
"B1" 405+15	R+/OUTSIDE		40	A	20	C			1	1		
		200										
"B1" 407+15	R+/OUTSIDE		40	A	20	C			1	1		
		200										
"B1" 409+15	R+/OUTSIDE		40	A	20	C			1	1		
		200										
"B1" 411+15	R+/OUTSIDE		40	A	20	C			1	1		
		146										
"B1" 412+60	R+/OUTSIDE		7	D	7	C						INTO DI
		17										
"B1" 412+70	R+/OUTSIDE											END AT BRIDGE
"B1" 277+30	R+/INSIDE											BEGIN SHASTA R. BRIDGE
		155										
"B1" 278+85	R+/INSIDE		4	C					1			
		155										
"B1" 280+40	R+/INSIDE		15	C	15	C			1	1		
		150										
"B1" 281+90	R+/INSIDE		15	C					1	1		
"B1" 306+10	R+/INSIDE				30	C			1	1		
		200										
"B1" 308+05	R+/INSIDE		30	C	30	C			1	1		
		200										
"B1" 310+05	R+/INSIDE		30	C	30	C			1	1		
		200										
"B1" 312+05	R+/INSIDE		30	C	30	C			1	1		
		200										
"B1" 314+05	R+/INSIDE		30	C	30	C			1	1		
		200										
	SUBTOTAL	4723	676		587				22	21		

EDGE DRAIN QUANTITIES SUMMARY

STATION	R+\L+ INSIDE\OUTSIDE SHOULDER	3" PLASTIC PIPE (EDGE DRAIN)	3" PLASTIC PIPE (EDGE DRAIN OUTLET) OUTLET LENGTH	OUTLET TYPE	VENT LENGTH	VENT TYPE	CLEAN OUT LENGTH	CLEAN OUT TYPE	PAVEMENT MARKER (NON-REFLECTIVE RECESSED)	DELINEATOR CLASS 2	FLUSH EXISTING EDGE DRAINS	REMARKS
		LF	LF		LF		LF		EA	EA	LF	
"B1" 316+00	R+/INSIDE		30	C	30	C			1	1		
		200										
"B1" 318+00	R+/INSIDE		30	C	30	C			1	1		
		200										
"B1" 319+95	R+/INSIDE		30	C	30	C			1	1		
		200										
"B1" 321+95	R+/INSIDE		30	C	30	C			1	1		
		150										
"B1" 323+40	R+/INSIDE		30	C	30	C			1	1		
		150										
"B1" 324+85	R+/INSIDE		30	C					1	1		
"B1" 380+80	R+/INSIDE				30	C			1	1		
		250										
"B1" 383+30	R+/INSIDE		30	C	30	C			1	1		
		300										
"B1" 386+25	R+/INSIDE		30	C	30	C			1	1		
		300										
"B1" 389+25	R+/INSIDE		30	C	30	C			1	1		
		300										
"B1" 392+25	R+/INSIDE		30	C	30	C			1	1		
		300										
"B1" 395+25	R+/INSIDE		30	C	30	C			1	1		
		200										
"B1" 397+20	R+/INSIDE		30	C	30	C			1	1		
		200										
"B1" 399+20	R+/INSIDE		30	C	30	C			1	1		
		200										
"B1" 401+20	R+/INSIDE		30	C	30	C			1	1		
		200										
"B1" 403+20	R+/INSIDE		30	C	30	C			1	1		
		200										
"B1" 405+20	R+/INSIDE		30	C					1	1		
	SUBTOTAL	3350	480		420				17	17		
	SHEET TOTAL	8073	1156		1007				39	38		

DRAINAGE QUANTITIES
DQ-5

REVISED BY | DATE REVISED
ROD ESTES | APOLINARIO VIVIT
CALCULATED-DESIGNED BY | CHECKED BY
FUNCTIONAL SUPERVISOR: APOLINARIO VIVIT

STATE OF CALIFORNIA - DEPARTMENT OF TRANSPORTATION
Caltrans
DESIGN

P:\proj1\02\3E750_plans\pse\23e750id005.dgn

LAST REVISION 05-27-11 | DATE PLOTTED => 01-JUN-2011 | TIME PLOTTED => 09:55

Dist	COUNTY	ROUTE	POST MILES TOTAL PROJECT	SHEET No.	TOTAL SHEETS
02	Sis	5	R19/R25.3	50	149

REGISTERED CIVIL ENGINEER 05-27-11 DATE

05-27-11
PLANS APPROVAL DATE

REGISTERED PROFESSIONAL ENGINEER
APOLINARIO W. VIVIT
No. C66046
Exp. 06-30-12
CIVIL
STATE OF CALIFORNIA

THE STATE OF CALIFORNIA OR ITS OFFICERS OR AGENTS SHALL NOT BE RESPONSIBLE FOR THE ACCURACY OR COMPLETENESS OF SCANNED COPIES OF THIS PLAN SHEET.

EDGE DRAIN QUANTITIES SUMMARY

STATION	R+\L+ INSIDE\OUTSIDE SHOULDER	3" PLASTIC PIPE (EDGE DRAIN)	3" PLASTIC PIPE (EDGE DRAIN OUTLET) OUTLET LENGTH	OUTLET TYPE	VENT LENGTH	VENT TYPE	CLEAN OUT LENGTH	CLEAN OUT TYPE	PAVEMENT MARKER (NON-REFLECTIVE RECESSED)	DELINEATOR (CLASS 2)	FLUSH EXISTING EDGE DRAINS	REMARKS
		LF	LF		LF		LF		EA	EA	LF	
"B1" 276+60	L+/OUTSIDE											END SHASTA R. BRIDGE
		278										
"B1" 279+25	L+/OUTSIDE		40	C	40	C			1	1		
		278										
"B1" 282+05	L+/OUTSIDE		50	C	50	C			1	1		
		184										
"B1" 283+85	L+/OUTSIDE		50	C	50	C			1	1		
		95										
"B1" 284+85	L+/OUTSIDE		55\55	C					1	1		SAG
		276										
"B1" 287+55	L+/OUTSIDE		50	C	50	C			1	1		
		277										
"B1" 290+30	L+/OUTSIDE		25	C	25	C			1	1		
		277										
"B1" 293+20	L+/OUTSIDE				30\30	C			1	1		
		222										
"B1" 295+40	L+/OUTSIDE		40	C								BEGIN EDGEWOOD, BRIDGE
"B1" 296+40	L+/OUTSIDE								1			END EDGEWOOD, BRIDGE
		18										
"B1" 296+55	L+/OUTSIDE		25	C	25	C			1	1		
		157										
"B1" 298+10	L+/OUTSIDE		50	A	25	C			1	1		
		130										
"B1" 299+75	L+/OUTSIDE		50	A	25	C			1	1		
"B1" 301+00	L+/OUTSIDE		40	A	30	C			1	1		
		225										
"B1" 303+25	L+/OUTSIDE		25	C	25	C			1	1		
		145										
"B1" 304+70	L+/OUTSIDE		75	C	75				1	1		
		190										
"B1" 306+60	L+/OUTSIDE		60	C	60	C			1	1		
		210										
"B1" 308+75	L+/OUTSIDE		40	C	40	C			1	1		
		200										
"B1" 310+80	L+/OUTSIDE		35	C	35	C			1	1		
		300										
"B1" 313+85	L+/OUTSIDE		35	C	35	C			1	1		
		200										
"B1" 315+90	L+/OUTSIDE		30	C	30	C			1	1		
		200										
"B1" 317+95	L+/OUTSIDE		30	C	30	C			1	1		
		200										
"B1" 320+00	L+/OUTSIDE		30	C	30	C			1	1		
		200										
"B1" 322+05	L+/OUTSIDE		30	C	30	C			1	1		
		200										
"B1" 324+10	L+/OUTSIDE		30	C	30	C			1	1		
		200										
"B1" 326+10	L+/OUTSIDE		30	C	30	C			1	1		
		200										
"B1" 328+10	L+/OUTSIDE		30	C	30	C			1	1		
		200										
	SUBTOTAL	5232	1010		855				25	24		

EDGE DRAIN QUANTITIES SUMMARY

STATION	R+\L+ INSIDE\OUTSIDE SHOULDER	3" PLASTIC PIPE (EDGE DRAIN)	3" PLASTIC PIPE (EDGE DRAIN OUTLET) OUTLET LENGTH	OUTLET TYPE	VENT LENGTH	VENT TYPE	CLEAN OUT LENGTH	CLEAN OUT TYPE	PAVEMENT MARKER (NON-REFLECTIVE RECESSED)	DELINEATOR (CLASS 2)	FLUSH EXISTING EDGE DRAINS	REMARKS
		LF	LF		LF		LF		EA	EA	LF	
"B1" 330+10	L+/OUTSIDE		40	C	40	C			1	1		
		200										
"B1" 332+00	L+/OUTSIDE		40	C	40	C			1	1		
		355										
"B1" 335+45	L+/OUTSIDE		40	C	40	C			1	1		
		300										
"B1" 338+35	L+/OUTSIDE		35	C	35	C			1	1		
		245										
"B1" 340+70	L+/OUTSIDE		35	C	35	C			1	1		
		300										
"B1" 343+60	L+/OUTSIDE		40	A	25	C			1	1		
		300										
"B1" 346+50	L+/OUTSIDE		40	A	25	C			1	1		
		300										
"B1" 349+50	L+/OUTSIDE		40	A	25	C			1	1		
		300										
"B1" 352+55	L+/OUTSIDE		40	A	25	C			1	1		
		300										
"B1" 355+55	L+/OUTSIDE		40	A	25	C			1	1		
		300										
"B1" 358+55	L+/OUTSIDE		30	C	30	C			1	1		
		300										
"B1" 361+55	L+/OUTSIDE		30	C	30	C			1	1		
		294										
"B1" 364+50	L+/OUTSIDE		30	C	30	C			1	1		
		201										
"B1" 366+50	L+/OUTSIDE		30	C	30	C			1	1		
		305										
"B1" 369+55	L+/OUTSIDE		25	C	25	C			1	1		
		300										
"B1" 372+55	L+/OUTSIDE		25	C	25	C			1	1		
		300										
"B1" 375+55	L+/OUTSIDE		25	C	25	C			1	1		
		255										
"B1" 378+10	L+/OUTSIDE		25	C	25	C			1	1		
		300										
"B1" 381+10	L+/OUTSIDE		25	C	25	C			1	1		
		245										
	SUBTOTAL	5400	695		620				21	21		
	SHEET TOTAL	10,632	1705		1475				46	45		

DRAINAGE QUANTITIES
DQ-6

REVISED BY | DATE REVISED
ROD ESTES | APOLINARIO VIVIT
CALCULATED-DESIGNED BY | CHECKED BY
FUNCTIONAL SUPERVISOR | APOLINARIO VIVIT

STATE OF CALIFORNIA - DEPARTMENT OF TRANSPORTATION
Caltrans® DESIGN

P:\proj1\02\3E750_plans\pse\23e750id006.dgn

LAST REVISION 05-27-11 | DATE PLOTTED => 01-JUN-2011 | TIME PLOTTED => 09:55

Dist	COUNTY	ROUTE	POST MILES TOTAL PROJECT	SHEET No.	TOTAL SHEETS
02	Sis	5	R19/R25.3	51	149

REGISTERED CIVIL ENGINEER 05-27-11 DATE

05-27-11
PLANS APPROVAL DATE

REGISTERED PROFESSIONAL ENGINEER APOLINARIO W. VIVIT No. C66046 Exp. 06-30-12 CIVIL STATE OF CALIFORNIA

THE STATE OF CALIFORNIA OR ITS OFFICERS OR AGENTS SHALL NOT BE RESPONSIBLE FOR THE ACCURACY OR COMPLETENESS OF SCANNED COPIES OF THIS PLAN SHEET.

EDGE DRAIN QUANTITIES SUMMARY

STATION	R+\L+ INSIDE\OUTSIDE SHOULDER	3" PLASTIC PIPE (EDGE DRAIN)	3" PLASTIC PIPE (EDGE DRAIN OUTLET) OUTLET LENGTH	OUTLET TYPE	VENT LENGTH	VENT TYPE	CLEAN OUT LENGTH	CLEAN OUT TYPE	PAVEMENT MARKER (NON-REFLECTIVE RECESSED)	DELINEATOR (CLASS 2)	FLUSH EXISTING EDGE DRAINS	REMARKS
		LF	LF		LF		LF		EA	EA	LF	
"B1" 383+60	L+/OUTSIDE		25	C	25	C			1	1		
		200										
"B1" 385+65	L+/OUTSIDE		25	C	25	C			1	1		
		200										
"B1" 387+65	L+/OUTSIDE		25	C	25	C			1	1		
		200										
"B1" 389+65	L+/OUTSIDE		30	C	30	C			1	1		
		140										
"B1" 391+10	L+/OUTSIDE		30	C	30	C			1	1		
		215										
"B1" 393+25	L+/OUTSIDE		30	C	30	C			1	1		
		200										
"B1" 395+30	L+/OUTSIDE		30	C	30	C			1	1		
		200										
"B1" 397+30	L+/OUTSIDE		30	C	30	C			1	1		
		200										
"B1" 399+35	L+/OUTSIDE		30	C	30	C			1	1		
		172										
"B1" 401+10	L+/OUTSIDE		30	C	30	C			1	1		
		268										
"B1" 403+80	L+/OUTSIDE		35	C	35	C			1	1		
		214										
"B1" 405+95	L+/OUTSIDE		35	C	35	C			1	1		
		224										
"B1" 408+15	L+/OUTSIDE		12	C	12	C			1	1		
		265										
"B1" 410+85	L+/OUTSIDE		50	A	20	C			1	1		
		175										
"B1" 412+60	L+/OUTSIDE		11\11	D					1			DROP INLET
		11										
"B1" 412+70	L+/OUTSIDE											BEGIN BRIDGE
"B1" 285+85	L+/INSIDE		15	C					1	1		
		200										
"B1" 287+85	L+/INSIDE		15	C	15	C			1	1		
		200										
"B1" 289+85	L+/INSIDE		15	C	15	C			1	1		
		200										
"B1" 291+85	L+/INSIDE		15	C	15	C			1	1		
		120										
"B1" 293+05	L+/INSIDE				15\15	C			1	1		
		224										
"B1" 295+25	L+/INSIDE		15\15	C					1			
		15										
"B1" 295+45	L+/INSIDE											BEGIN BRIDGE
SUBTOTAL		3843	529		462				21	19		

EDGE DRAIN QUANTITIES SUMMARY

STATION	R+\L+ INSIDE\OUTSIDE SHOULDER	3" PLASTIC PIPE (EDGE DRAIN)	3" PLASTIC PIPE (EDGE DRAIN OUTLET) OUTLET LENGTH	OUTLET TYPE	VENT LENGTH	VENT TYPE	CLEAN OUT LENGTH	CLEAN OUT TYPE	PAVEMENT MARKER (NON-REFLECTIVE RECESSED)	DELINEATOR (CLASS 2)	FLUSH EXISTING EDGE DRAINS	REMARKS
		LF	LF		LF		LF		EA	EA	LF	
"B1" 296+40	L+/INSIDE											END BRIDGE
		220										
"B1" 298+55	L+/INSIDE		15	C	15	C			1	1		
		200										
"B1" 300+55	L+/INSIDE		15	C	15	C			1	1		
		200										
"B1" 302+55	L+/INSIDE		15	C					1	1		
"B1" 328+55	L+/INSIDE				60	C			1			
		220										
"B1" 330+75	L+/INSIDE		60	D	60	C			1			D.I.
		180										
"B1" 332+50	L+/INSIDE						5	2	1	1		
		200										
"B1" 334+50	L+/INSIDE						5	2	1			
		200										
"B1" 336+45	L+/INSIDE								1			
		200										
"B1" 338+45	L+/INSIDE		5	C					1			
		200										
"B1" 340+40	L+/INSIDE		5	C			5	2	1			
		250										
"B1" 342+90	L+/INSIDE						5	2	1			
		200										
"B1" 344+85	L+/INSIDE						5	2	1			
		200										
"B1" 346+80	L+/INSIDE						5	2	1			
		150										
"B1" 348+30	L+/INSIDE		60	C					1	1		
SUBTOTAL		2620	175		150		30		14	5		
SHEET TOTAL		6463	704		612		30		35	24		
SHEET DQ-2 TOTAL		7376	887		575		27		26	11		
SHEET DQ-3 TOTAL		7029	721		524		24		25	12	23,188	
SHEET DQ-4 TOTAL		9917	1400		1320				44	45		
SHEET DQ-5 TOTAL		8073	1156		1007				39	39		
SHEET DQ-6 TOTAL		10,632	1705		1475				45	44		
TOTAL		49,490	12,167						214	175	23,188	

DRAINAGE QUANTITIES
DQ-7

REVISED BY | DATE REVISED
ROD ESTES | APOLINARIO VIVIT
CALCULATED-DESIGNED BY | CHECKED BY
FUNCTIONAL SUPERVISOR | APOLINARIO VIVIT
STATE OF CALIFORNIA - DEPARTMENT OF TRANSPORTATION
Caltrans® DESIGN

P:\proj1\02\3E750_plans\pse\23e750id007.dgn

LAST REVISION 05-27-11 | DATE PLOTTED => 01-JUN-2011 | TIME PLOTTED => 09:55

Dist	COUNTY	ROUTE	POST MILES TOTAL PROJECT	SHEET No.	TOTAL SHEETS
02	Sis	5	R19/R25.3	52	149

REGISTERED CIVIL ENGINEER 05-27-11 DATE

05-27-11
PLANS APPROVAL DATE

REGISTERED PROFESSIONAL ENGINEER APOLINARIO W. VIVIT No. C66046 Exp. 06-30-12 CIVIL STATE OF CALIFORNIA

THE STATE OF CALIFORNIA OR ITS OFFICERS OR AGENTS SHALL NOT BE RESPONSIBLE FOR THE ACCURACY OR COMPLETENESS OF SCANNED COPIES OF THIS PLAN SHEET.

NOTES:

1. EXACT SIGN LOCATION TO BE DETERMINED BY THE ENGINEER.
2. ALL SIGNS SHALL BE BLACK ON ORANGE EXCEPT C40 (CA), WHICH IS BLACK ON WHITE.
3. CALIFORNIA CODES ARE DESIGNATED BY (CA), OTHERWISE FEDERAL CODES ARE SHOWN.
4. PLACE INTERMEDIATE C11 SIGNS NEAR MIDDLE OF CONSTRUCTION AREA.

LEGEND:

ONE POST STATIONARY MOUNTED SIGN.

TWO POST STATIONARY MOUNTED SIGN.

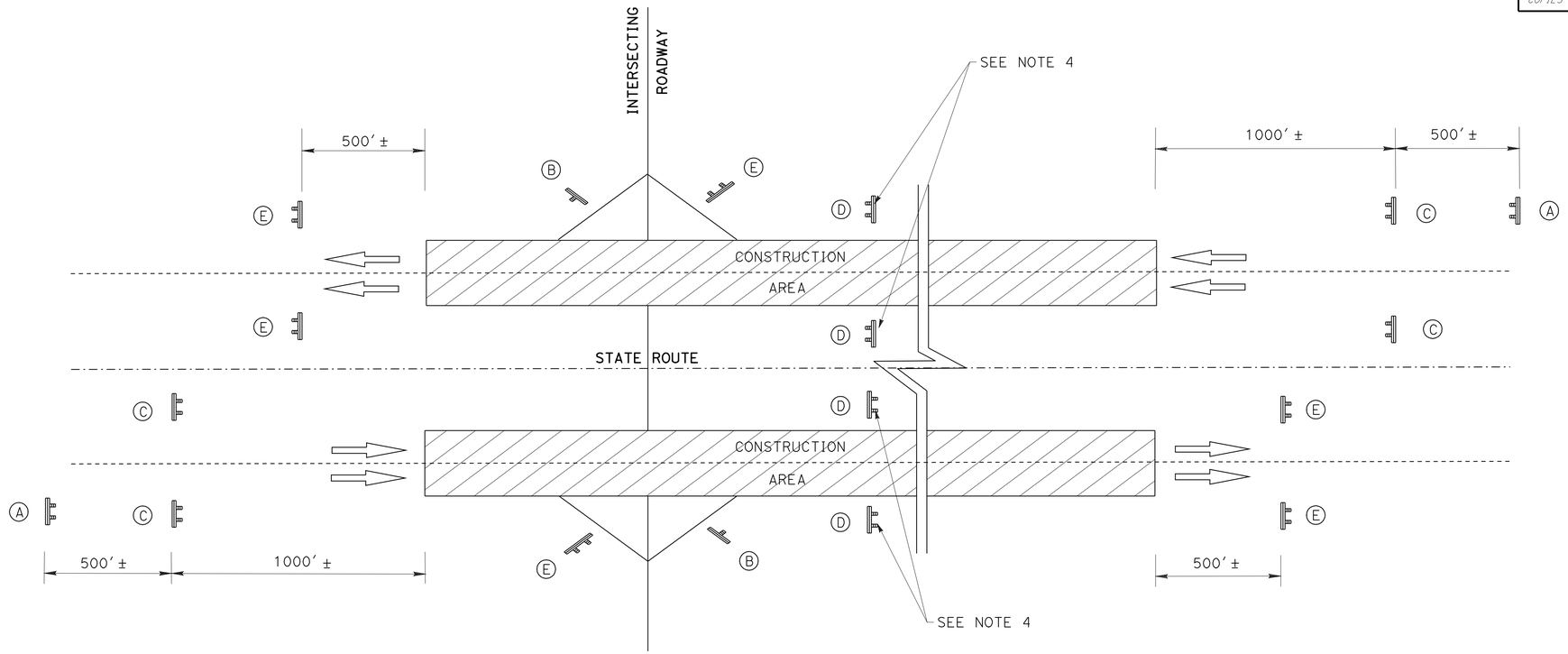

CONSTRUCTION AREA SIGNS (STATIONARY MOUNTED)

○	TYPE	PANEL SIZE INCHES	SIGN MESSAGE	NO. OF POSTS AND SIZE	NO OF SIGNS
A	C40(CA)	108" x 42"	TRAFFIC FINES DOUBLED IN CONSTRUCTION ZONES	2- 4" x 6"	4
B	W20-1 C23B(CA)	48" x 48" VAR x 24"	ROAD WORK AHEAD "PAVEMENT MAINTENANCE"	1- 4" x 6"	8
C	C11 C23B(CA)	90" x 48" VAR x 24"	ROAD CONSTRUCTION NEXT 6 MILES "PAVEMENT MAINTENANCE"	2- 4" x 6"	4
D	C11(CA)	60" x 36"	ROAD CONSTRUCTION NEXT 3 MILES	2- 4" x 4"	4
E	C14(CA)	48" x 24"	END ROAD WORK	2- 4" x 4"	12

ON-RAMPS AND OFF-RAMPS

PM	LOCATION
17.73	S WEED BLVD NB ON-RAMP
17.70	S WEED BLVD SB OFF-RAMP
18.81	Rte 5, 97 SEP SB ON-RAMP
18.89	Rte 5, 97 SEP NB OFF-RAMP
19.27	Rte 5, 97 SEP SB OFF-RAMP
19.33	Rte 5, 97 SEP NB ON-RAMP
19.59	N WEED SB ON-RAMP
19.55	N WEED NB OFF-RAMP
20.11	N WEED SB OFF-RAMP
20.12	N WEED NB ON-RAMP
22.78	EDGEWOOD RD SB ON-RAMP
22.81	EDGEWOOD RD NB OFF-RAMP
23.22	EDGEWOOD RD SB OFF-RAMP
23.27	EDGEWOOD RD NB ON-RAMP
25.42	N EDGEWOOD Rd SB ON-RAMP
25.30	N EDGEWOOD Rd NB OFF-RAMP

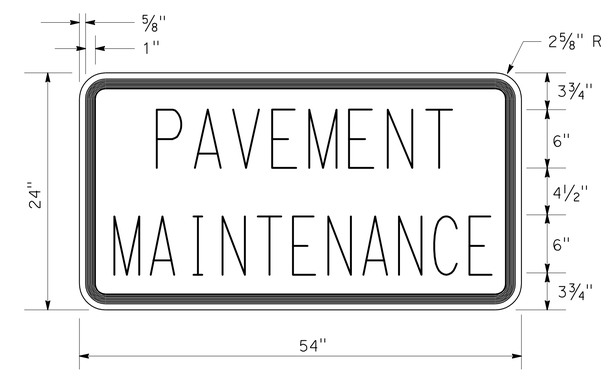

C23B (CA) SIGN PANEL DETAIL

CONSTRUCTION AREA SIGNS

NO SCALE

CS-1

REVISED BY | DATE REVISED
ROD ESTES | APOLINARIO VIVIT
CALCULATED-DESIGNED BY | CHECKED BY
FUNCTIONAL SUPERVISOR | APOLINARIO VIVIT
STATE OF CALIFORNIA - DEPARTMENT OF TRANSPORTATION
DESIGN
Caltrans
P:\proj1\02\3E750_plans\pse\23e750ia001.dgn

LAST REVISION 05-27-11 | DATE PLOTTED => 01-JUN-2011 | TIME PLOTTED => 09:55

Dist	COUNTY	ROUTE	POST MILES TOTAL PROJECT	SHEET No.	TOTAL SHEETS
02	Sis	5	R19/R25.3	53	149

REGISTERED CIVIL ENGINEER 05-27-11 DATE

05-27-11
PLANS APPROVAL DATE

REGISTERED PROFESSIONAL ENGINEER APOLINARIO W. VIVIT No. C66046 Exp. 06-30-12 CIVIL STATE OF CALIFORNIA

THE STATE OF CALIFORNIA OR ITS OFFICERS OR AGENTS SHALL NOT BE RESPONSIBLE FOR THE ACCURACY OR COMPLETENESS OF SCANNED COPIES OF THIS PLAN SHEET.

NOTES:

1. EXACT LOCATION AND POSITION OF CONSTRUCTION AREA SIGNS TO BE DETERMINED BY THE ENGINEER.
2. SEE QUANTITIES FOR STRIPE TYPES.
3. EXACT LOCATION AND POSITION OF PORTABLE LIGHTING SYSTEMS TO BE DETERMINED BY THE ENGINEER.

LEGEND

- CHANNELIZERS (SURFACE MOUNT)
- TEMPORARY RAILING (TYPE K) IN PLAN VIEW
- TEMPORARY RAILING (TYPE K) IN SECTIONAL VIEW
- WORK TO BE DONE IN STAGE
- DIRECTION OF TRAVEL
- PORTABLE FLASHING BEACONS
- FLASHING ARROW SIGN
- TRAFFIC CONE
- CHANNELIZER (SURFACE MOUNTED)
- PORTABLE LIGHTING SYSTEM
- STAGE NO.
- CROSSOVER LOCATION
- X-X STRIPE DETAIL
- WOOD SIGN (1-POST)

ABBREVIATIONS

P	OBJECT MARKER (TYPE P)
LL	LANE LINE
CB	CONCRETE BARRIER
TTS	TEMPORARY TRAFFIC STRIPE
TS	FINAL TRAFFIC STRIPE
TEP	Temp EDGE OF PAVEMENT
PLS	PORTABLE LIGHTING SYSTEM

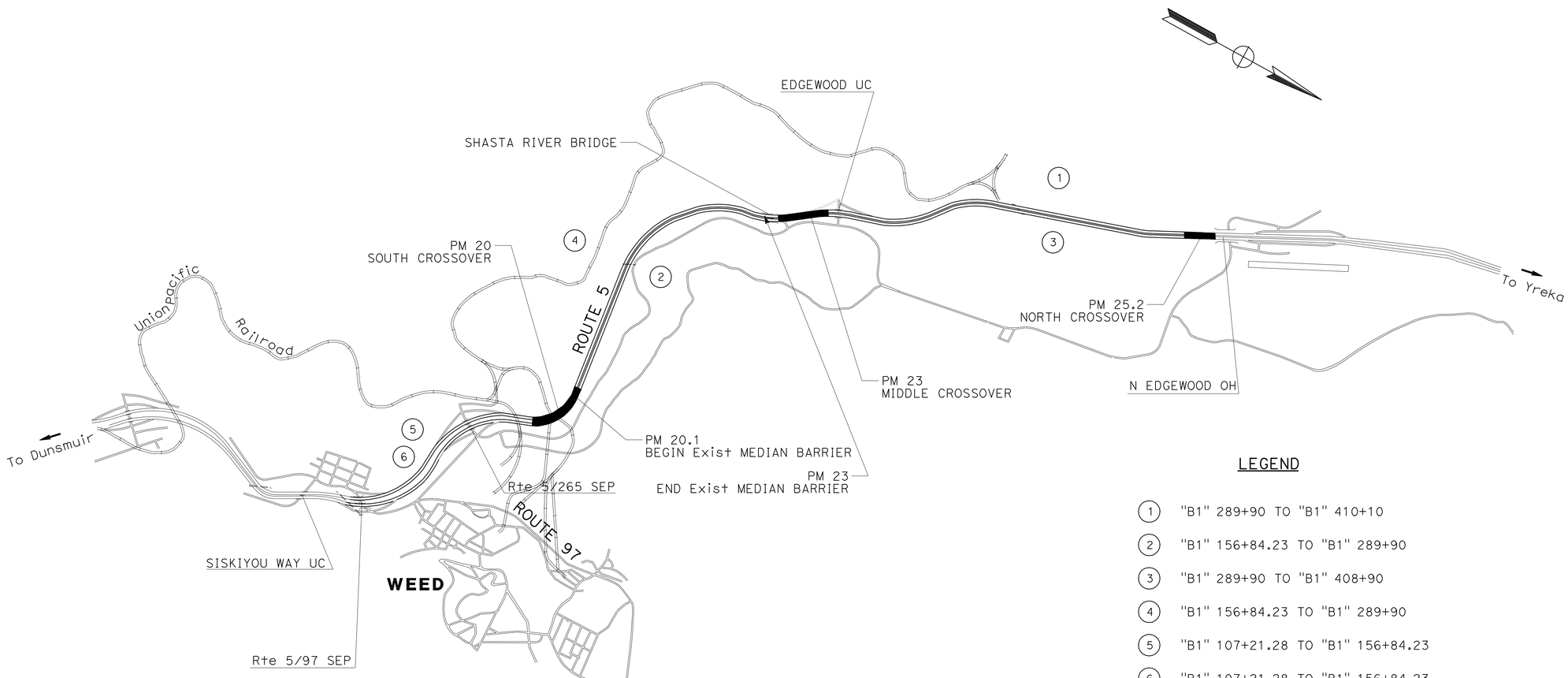

LEGEND

1. "B1" 289+90 TO "B1" 410+10
2. "B1" 156+84.23 TO "B1" 289+90
3. "B1" 289+90 TO "B1" 408+90
4. "B1" 156+84.23 TO "B1" 289+90
5. "B1" 107+21.28 TO "B1" 156+84.23
6. "B1" 107+21.28 TO "B1" 156+84.23

STAGE CONSTRUCTION AND TRAFFIC HANDLING PLANS

NO SCALE

SC-1

REVISED BY | DATE REVISED
APOLINARIO VIVIT | LORI EWENS
CALCULATED-DESIGNED BY | CHECKED BY
FUNCTIONAL SUPERVISOR: APOLINARIO VIVIT

STATE OF CALIFORNIA - DEPARTMENT OF TRANSPORTATION
Caltrans
DESIGN

P:\proj1\02\3E750_plans\pse\23e750ma001.dgn

LAST REVISION 05-27-11 | DATE PLOTTED => 01-JUN-2011 | TIME PLOTTED => 09:55

Dist	COUNTY	ROUTE	POST MILES TOTAL PROJECT	SHEET No.	TOTAL SHEETS
02	Sis	5	R19/R25.3	54	149

REGISTERED CIVIL ENGINEER 05-27-11 DATE

05-27-11
PLANS APPROVAL DATE

REGISTERED PROFESSIONAL ENGINEER APOLINARIO W. VIVIT No. C66046 Exp. 06-30-12 CIVIL STATE OF CALIFORNIA

THE STATE OF CALIFORNIA OR ITS OFFICERS OR AGENTS SHALL NOT BE RESPONSIBLE FOR THE ACCURACY OR COMPLETENESS OF SCANNED COPIES OF THIS PLAN SHEET.

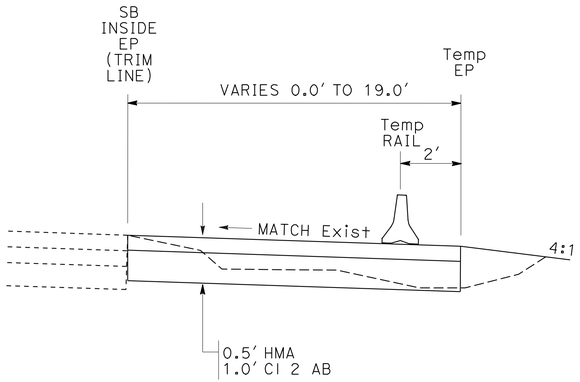

TYPICAL CROSS SECTION
"B1" 286+58.85 TO "B1" 288+92.00
NO SCALE

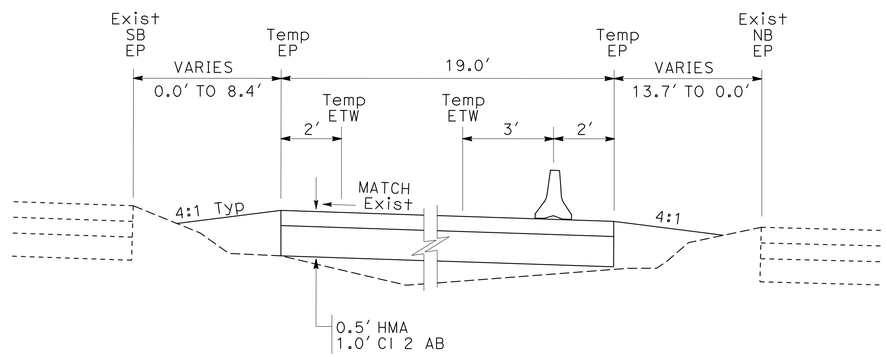

TYPICAL CROSS SECTION
"B1" 288+92.00 TO "B1" 291+04.45
NO SCALE

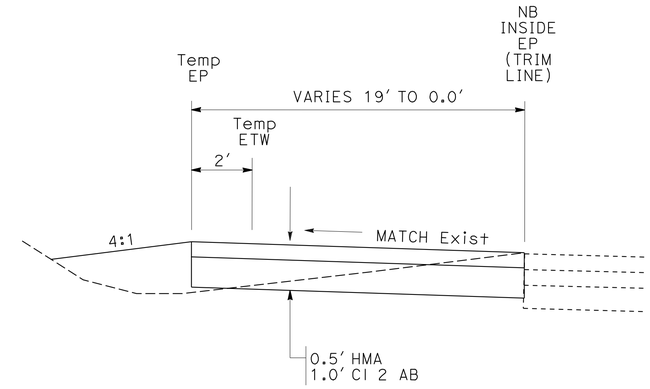

TYPICAL CROSS SECTION
"B1" 291+04.45 TO "B1" 292+47.65
NO SCALE

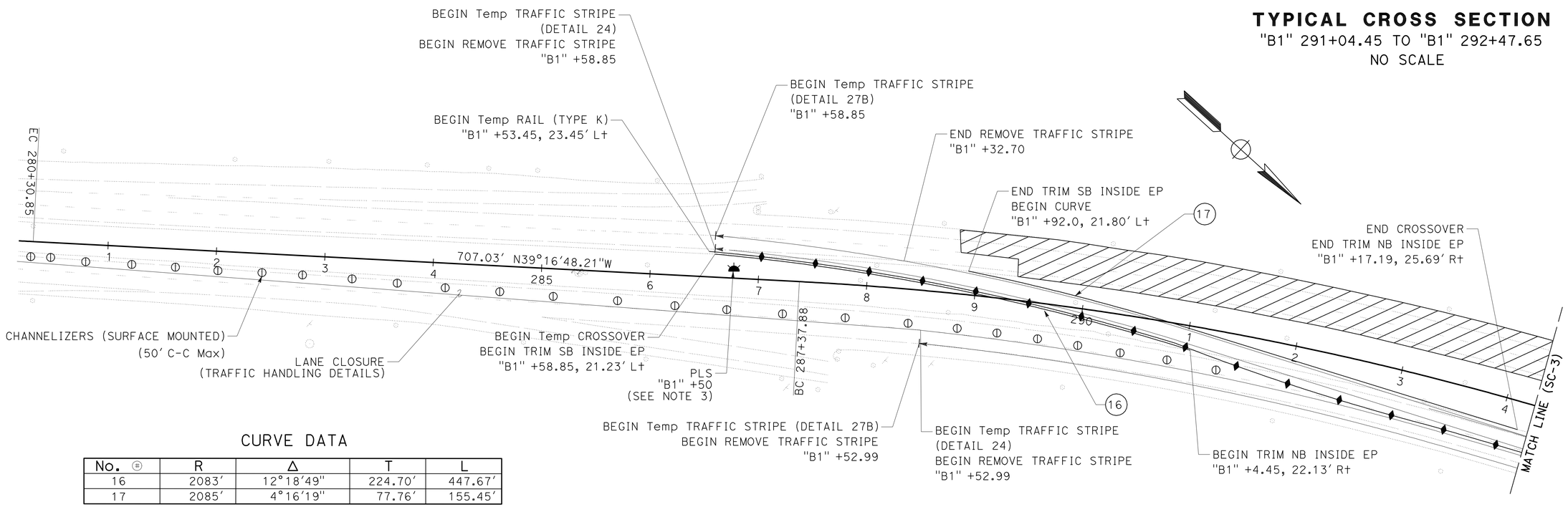

CURVE DATA

No. ⊕	R	Δ	T	L
16	2083′	12°18′49"	224.70′	447.67′
17	2085′	4°16′19"	77.76′	155.45′

PM 23
TEMPORARY CROSSOVER (MIDDLE SB TO NB)
SCALE: 1" = 50′

STAGE 1
STAGE CONSTRUCTION AND TRAFFIC HANDLING PLANS
SCALE: AS SHOWN

SC-2

THIS PLAN ACCURATE FOR STAGE CONSTRUCTION AND TRAFFIC HANDLING WORK ONLY

REVISED BY | DATE REVISED
ROD ESTES | APOLINARIO VIVIT
CALCULATED-DESIGNED BY | CHECKED BY
FUNCTIONAL SUPERVISOR | APOLINARIO VIVIT
STATE OF CALIFORNIA - DEPARTMENT OF TRANSPORTATION
Caltrans® DESIGN

P:\proj\02\3E750_plans\pse\23e750ma002.dgn

LAST REVISION 05-27-11 | DATE PLOTTED => 01-JUN-2011 TIME PLOTTED => 09:55

Dist	COUNTY	ROUTE	POST MILES TOTAL PROJECT	SHEET No.	TOTAL SHEETS
02	Sis	5	R19/R25.3	55	149

REGISTERED CIVIL ENGINEER 05-27-11 DATE

05-27-11
PLANS APPROVAL DATE

REGISTERED PROFESSIONAL ENGINEER
APOLINARIO W. VIVIT
No. C66046
Exp. 06-30-12
CIVIL
STATE OF CALIFORNIA

THE STATE OF CALIFORNIA OR ITS OFFICERS OR AGENTS SHALL NOT BE RESPONSIBLE FOR THE ACCURACY OR COMPLETENESS OF SCANNED COPIES OF THIS PLAN SHEET.

STAGE 1A WORK ITEMS:

CONSTRUCT MIDDLE Temp CROSSOVER (SB TO NB)
CONSTRUCT NORTH Temp CROSSOVER (NB TO SB)
REMOVE NB RUMBLE STRIPE (INSIDE AND OUTSIDE SHOULDERS)
COLD PLANE AC PAVEMENT SB LANES
COLD PLANE EDGEWOOD SB OFF-RAMP
COLD PLANE EDGEWOOD UC SB BRIDGE DECK
REMOVE AND CONSTRUCT SB EDGEDRAINS
REMOVE AC DIKE
CRACK AND SEAT PCC PAVEMENT
PLACE HMA TO 0.15' FROM FG
COLD PLANE AND OVERLAY EDGEWOOD SB OFF-RAMP
PLACE HMA DIKE
RECONSTRUCT MBGR
REMOVE STAGE 1 CROSSOVER TRAFFIC CONTROL

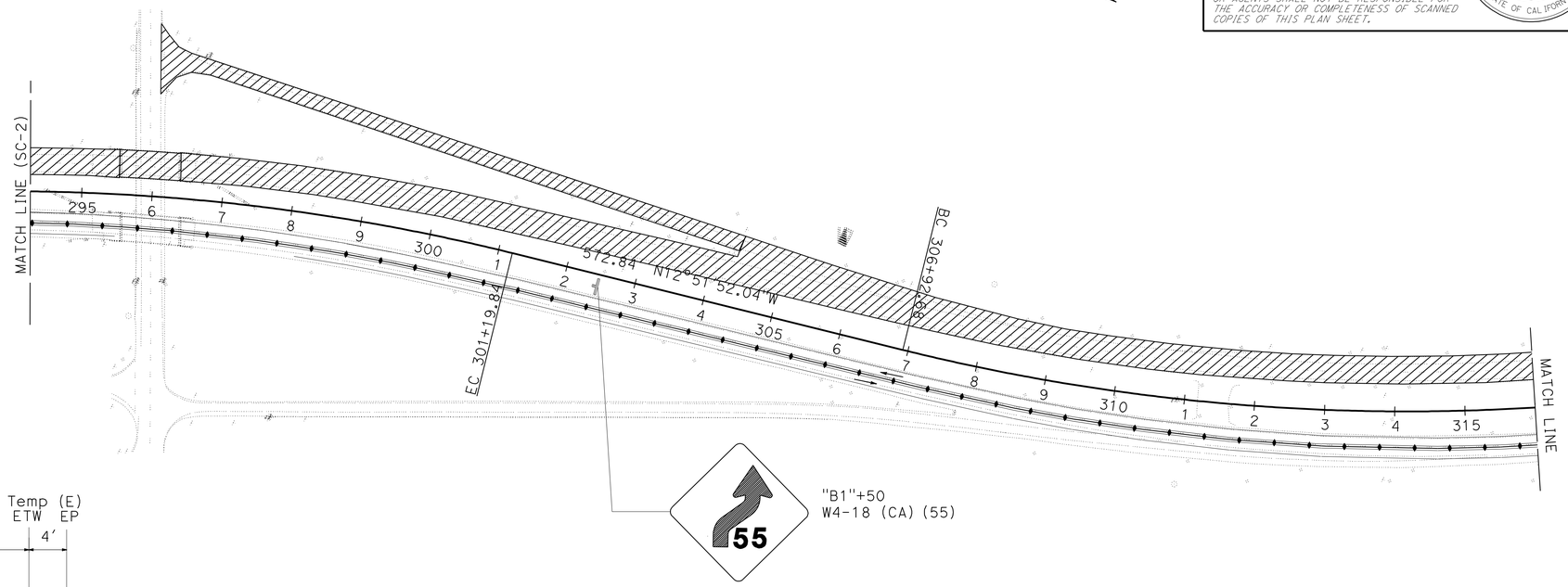

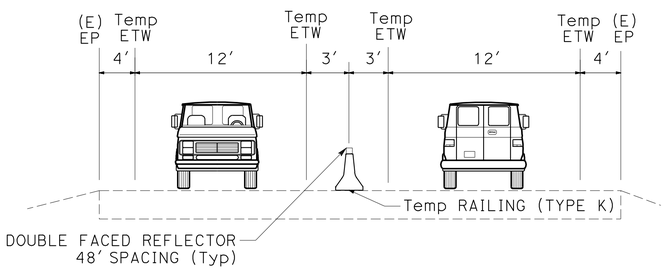

TYPICAL CROSS SECTION

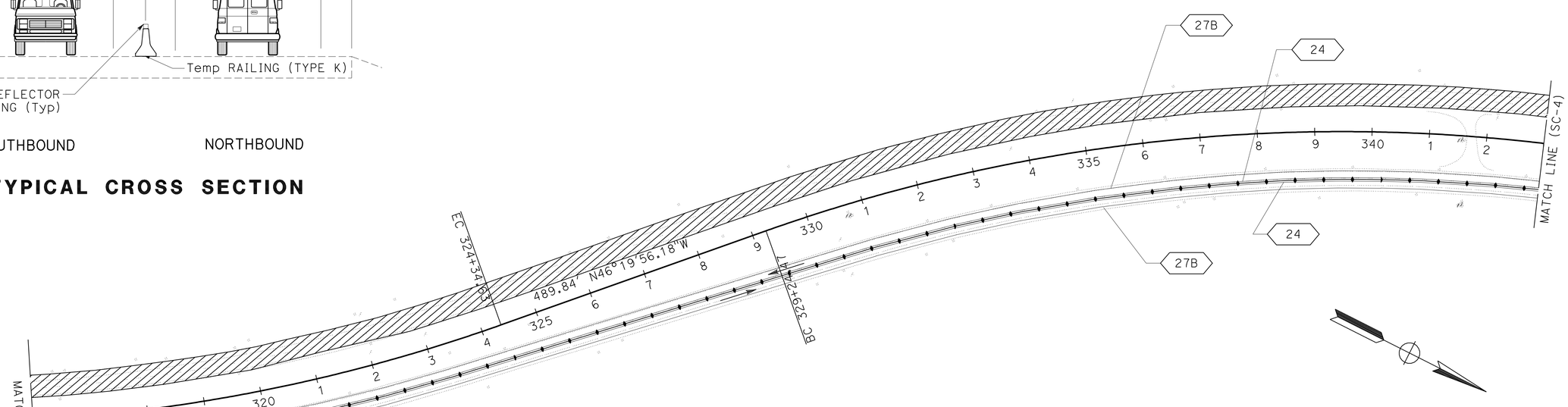

STAGE 1
STAGE CONSTRUCTION AND TRAFFIC HANDLING PLANS
NO SCALE

THIS PLAN ACCURATE FOR STAGE CONSTRUCTION AND TRAFFIC HANDLING WORK ONLY

SC-3

REVISED BY | DATE REVISED
APOLINARIO VIVIT | LORI EWENS
CALCULATED-DESIGNED BY | CHECKED BY
FUNCTIONAL SUPERVISOR: APOLINARIO VIVIT
STATE OF CALIFORNIA - DEPARTMENT OF TRANSPORTATION
Caltrans DESIGN
P:\proj1\02\3E750_plans\pse\23e750ma003.dgn

LAST REVISION 05-27-11 | DATE PLOTTED => 01-JUN-2011 | TIME PLOTTED => 09:56

Dist	COUNTY	ROUTE	POST MILES TOTAL PROJECT	SHEET No.	TOTAL SHEETS
02	Sis	5	R19/R25.3	56	149

REGISTERED CIVIL ENGINEER 05-27-11 DATE

05-27-11
PLANS APPROVAL DATE

REGISTERED PROFESSIONAL ENGINEER
APOLINARIO W. VIVIT
No. C66046
Exp. 06-30-12
CIVIL
STATE OF CALIFORNIA

THE STATE OF CALIFORNIA OR ITS OFFICERS OR AGENTS SHALL NOT BE RESPONSIBLE FOR THE ACCURACY OR COMPLETENESS OF SCANNED COPIES OF THIS PLAN SHEET.

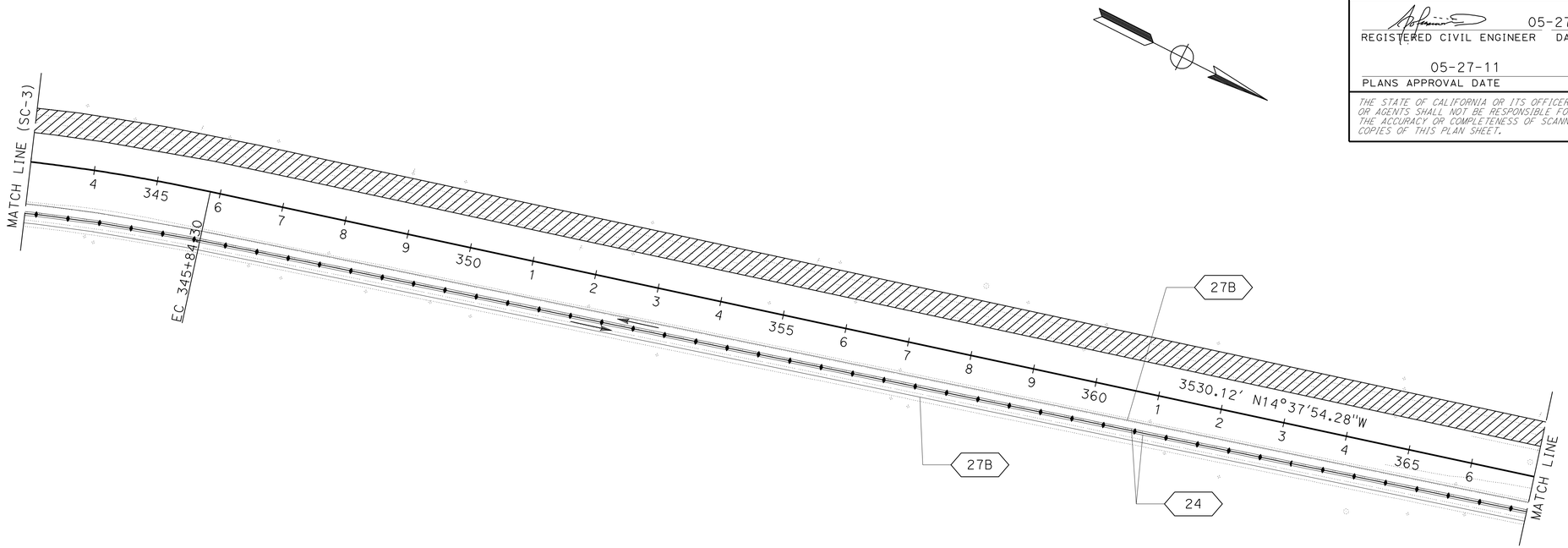

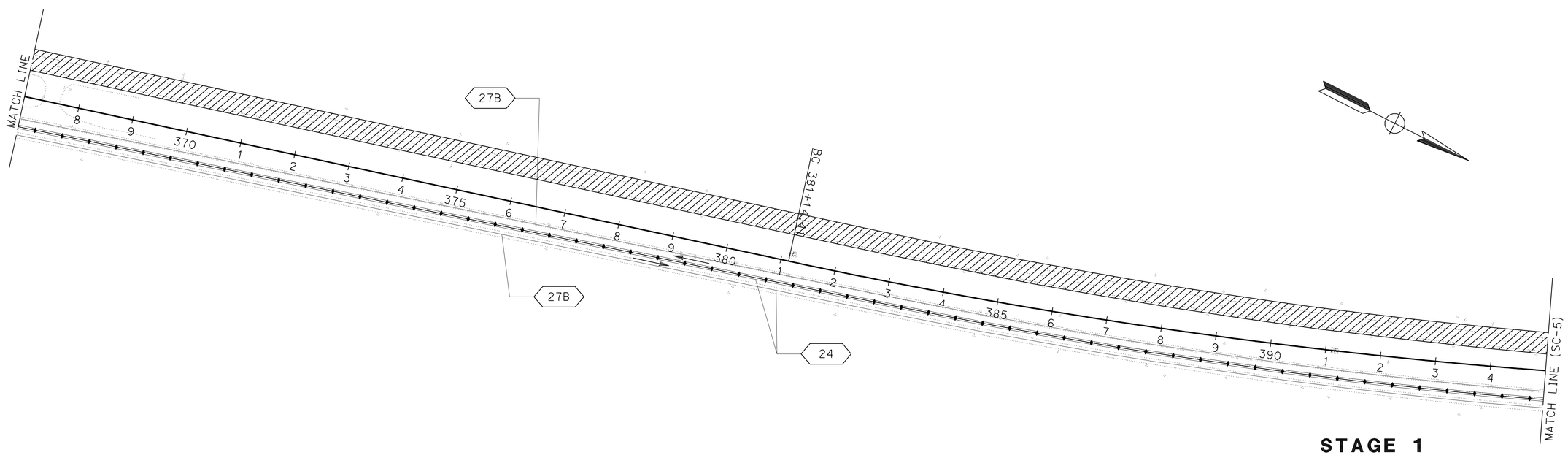

STAGE 1
STAGE CONSTRUCTION AND TRAFFIC HANDLING PLANS
NO SCALE

THIS PLAN ACCURATE FOR STAGE CONSTRUCTION AND TRAFFIC HANDLING WORK ONLY

SC-4

REVISED BY	DATE REVISED
APOLINARIO VIVIT	
LORI EWENS	

CALCULATED-DESIGNED BY
CHECKED BY

FUNCTIONAL SUPERVISOR
APOLINARIO VIVIT

STATE OF CALIFORNIA - DEPARTMENT OF TRANSPORTATION
Caltrans
DESIGN

P:\proj1\02\3E750_plans\pse\23e750ma004.dgn

LAST REVISION 05-27-11 | DATE PLOTTED => 01-JUN-2011 | TIME PLOTTED => 09:56

Dist	COUNTY	ROUTE	POST MILES TOTAL PROJECT	SHEET No.	TOTAL SHEETS
02	Sis	5	R19/R25.3	57	149

REGISTERED CIVIL ENGINEER DATE 05-27-11

05-27-11
PLANS APPROVAL DATE

REGISTERED PROFESSIONAL ENGINEER
APOLINARIO W. VIVIT
No. C66046
Exp. 06-30-12
CIVIL
STATE OF CALIFORNIA

THE STATE OF CALIFORNIA OR ITS OFFICERS OR AGENTS SHALL NOT BE RESPONSIBLE FOR THE ACCURACY OR COMPLETENESS OF SCANNED COPIES OF THIS PLAN SHEET.

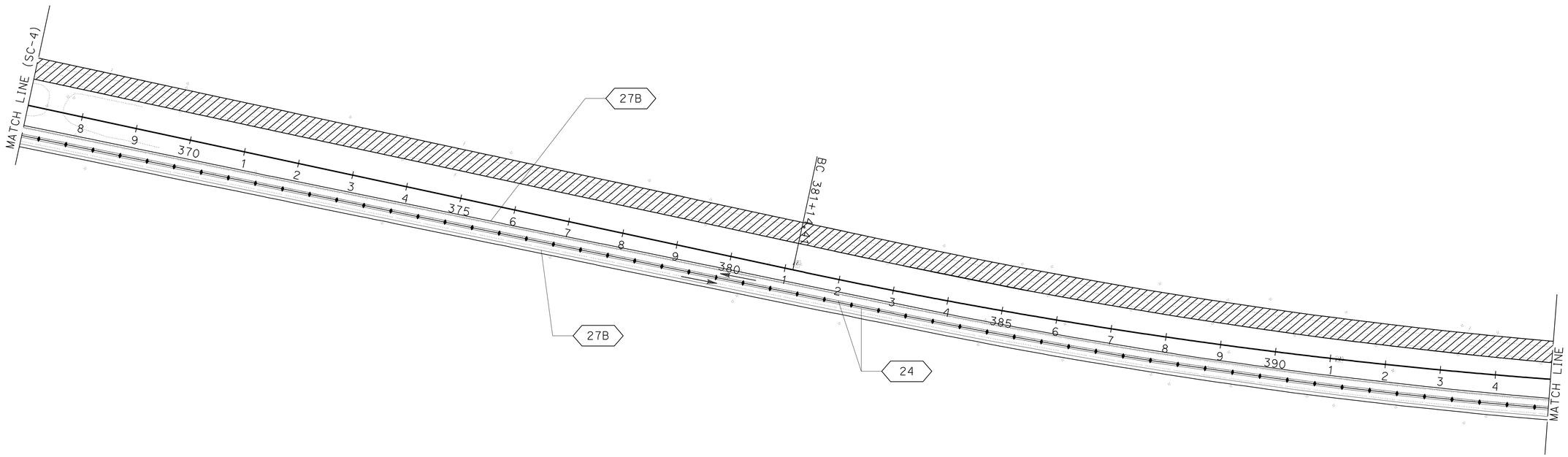

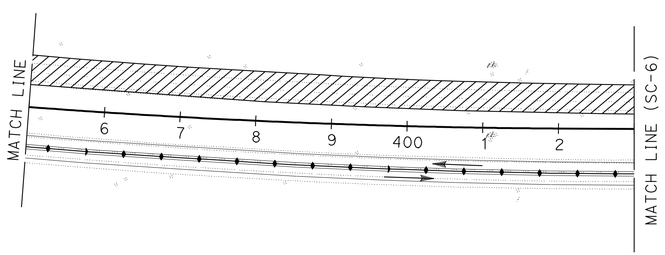

THIS PLAN ACCURATE FOR STAGE CONSTRUCTION AND TRAFFIC HANDLING WORK ONLY

STAGE 1
STAGE CONSTRUCTION AND TRAFFIC HANDLING PLANS

NO SCALE

SC-5

REVISED BY	DATE REVISED

CALCULATED-DESIGNED BY	APOLINARIO VIVIT
CHECKED BY	LORI EWENS
FUNCTIONAL SUPERVISOR	APOLINARIO VIVIT

Caltrans® STATE OF CALIFORNIA - DEPARTMENT OF TRANSPORTATION
DESIGN

P:\proj1\02\3E750_plans\pse\23e750ma005.dgn

LAST REVISION 05-27-11
DATE PLOTTED => 01-JUN-2011
TIME PLOTTED => 09:56

Dist	COUNTY	ROUTE	POST MILES TOTAL PROJECT	SHEET No.	TOTAL SHEETS
02	Sis	5	R19/R25.3	58	149

REGISTERED CIVIL ENGINEER 05-27-11 DATE

05-27-11
PLANS APPROVAL DATE

REGISTERED PROFESSIONAL ENGINEER APOLINARIO W. VIVIT No. C66046 Exp. 06-30-12 CIVIL STATE OF CALIFORNIA

THE STATE OF CALIFORNIA OR ITS OFFICERS OR AGENTS SHALL NOT BE RESPONSIBLE FOR THE ACCURACY OR COMPLETENESS OF SCANNED COPIES OF THIS PLAN SHEET.

NOTE:

1. K-RAIL OFFSETS MEASURED TO CENTERLINE OF BARRIER.

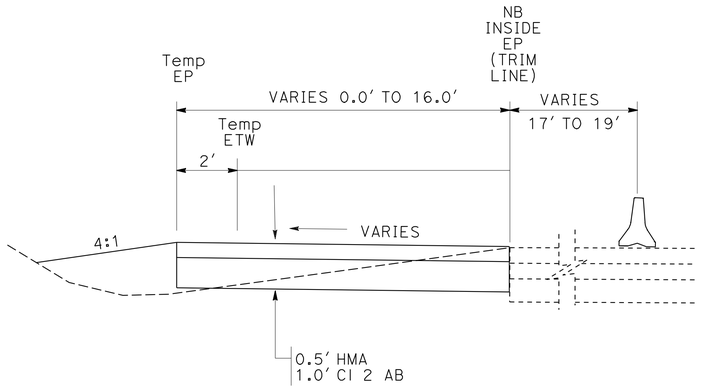

TYPICAL CROSS SECTION
"B1" 404+45.17 TO "B1" 406+62.47
NO SCALE

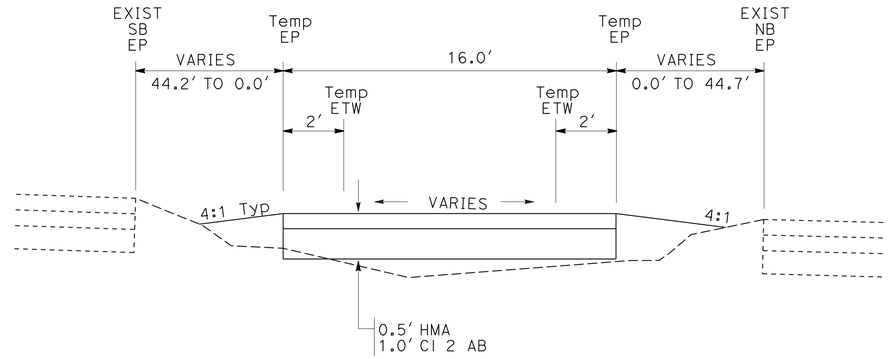

TYPICAL CROSS SECTION
"B1" 406+62.47 TO "B1" 409+94.38
NO SCALE

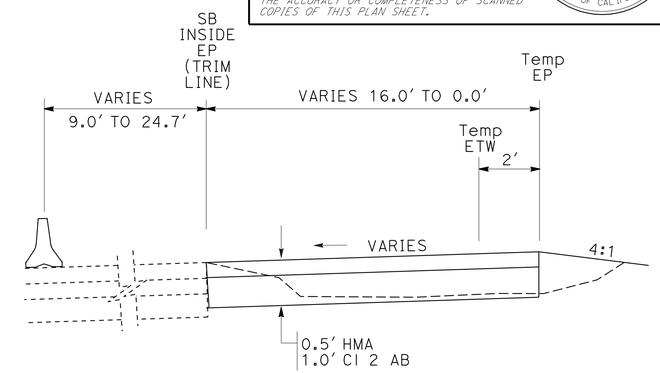

TYPICAL CROSS SECTION
"B1" 409+94.38 TO "B1" 411+52.44
NO SCALE

CURVE DATA

No. (#)	R	Δ	T	L
20	2098'	6°15'01"	114.54'	228.86'
21	2086'	3°52'18"	70.50'	140.95'

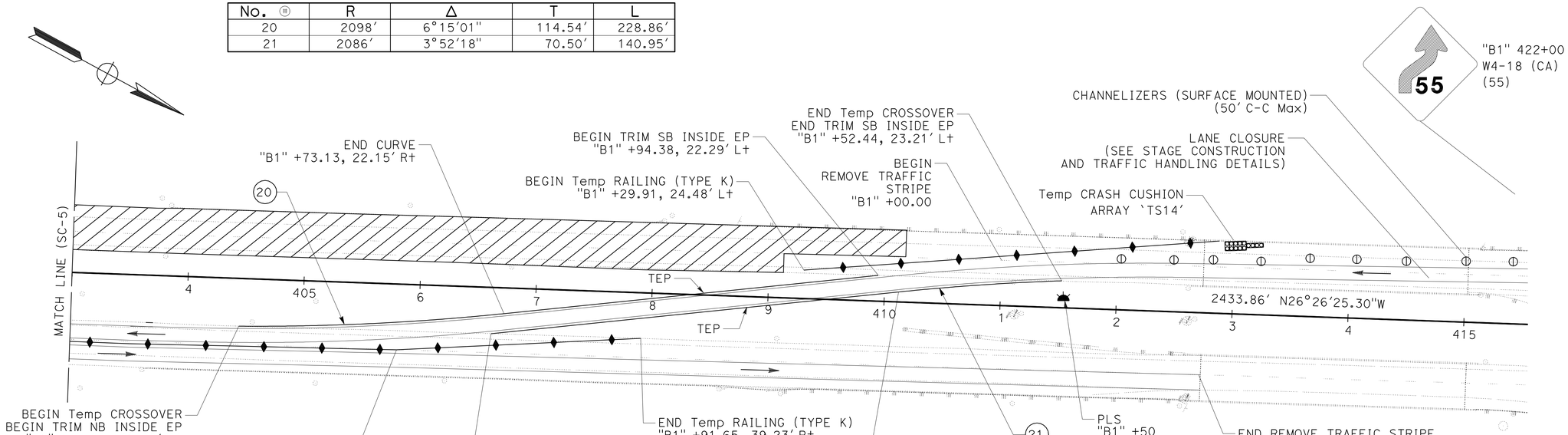

PM 25.3
TEMPORARY CROSSOVER (NORTH NB TO SB)
SCALE: 1" = 50'

THIS PLAN ACCURATE FOR STAGE CONSTRUCTION AND TRAFFIC HANDLING WORK ONLY

STAGE 1
STAGE CONSTRUCTION AND TRAFFIC HANDLING PLANS
SCALE: AS SHOWN

SC-6

REVISED BY | DATE REVISED
ROD ESTES | APOLINARIO VIVIT
CALCULATED-DESIGNED BY | CHECKED BY
FUNCTIONAL SUPERVISOR | APOLINARIO VIVIT

STATE OF CALIFORNIA - DEPARTMENT OF TRANSPORTATION
Caltrans
DESIGN

P:\proj\02\3E750_plans\pse\23e750ma006.dgn

LAST REVISION 05-27-11 | DATE PLOTTED => 01-JUN-2011 | TIME PLOTTED => 09:56

Dist	COUNTY	ROUTE	POST MILES TOTAL PROJECT	SHEET No.	TOTAL SHEETS
02	Sis	5	R19/R25.3	59	149

REGISTERED CIVIL ENGINEER DATE 05-27-11

05-27-11
PLANS APPROVAL DATE

REGISTERED PROFESSIONAL ENGINEER
APOLINARIO W. VIVIT
No. C66046
Exp. 06-30-12
CIVIL
STATE OF CALIFORNIA

THE STATE OF CALIFORNIA OR ITS OFFICERS OR AGENTS SHALL NOT BE RESPONSIBLE FOR THE ACCURACY OR COMPLETENESS OF SCANNED COPIES OF THIS PLAN SHEET.

NOTE:

1. FOR TRAFFIC HANDLING PLAN SEE TRAFFIC HANDLING DETAILS, SHEET THD-4.

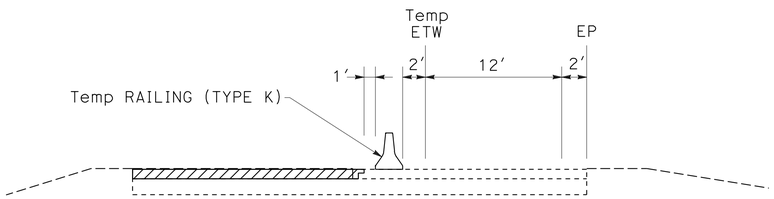

TYPICAL CROSS SECTION
LEFT SIDE

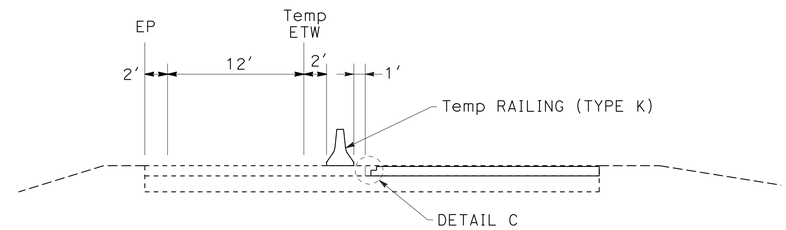

TYPICAL CROSS SECTION
RIGHT SIDE

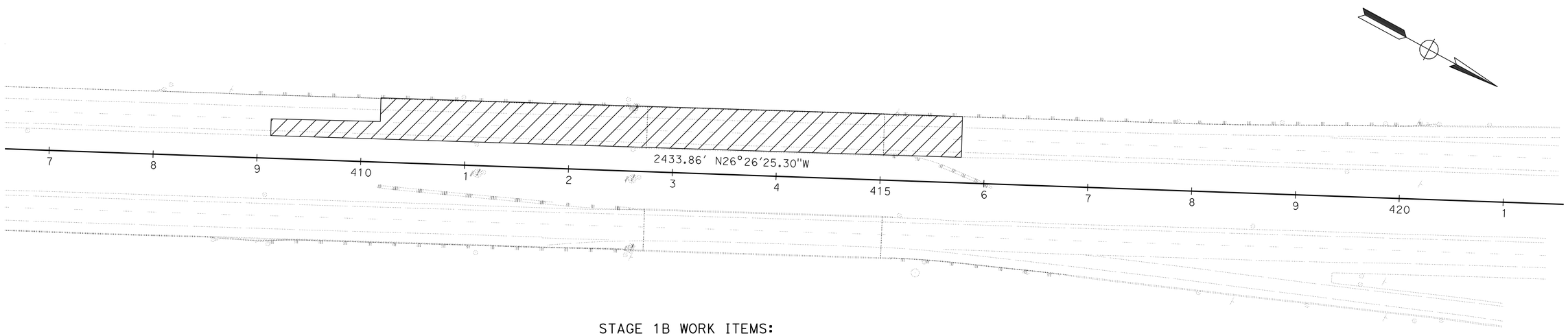

STAGE 1B WORK ITEMS:

CONSTRUCT RIGHT SIDE OF SB LANES AND N EDGEWOOD OH
CONSTRUCT LEFT SIDE OF SB LANES AND N EDGEWOOD OH

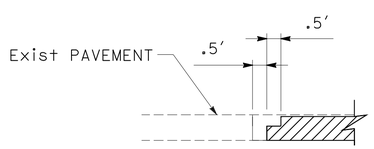

DETAIL C
STAGGER HMA LIFTS

SCALE: 1" = 50′
PM 25.3

THIS PLAN ACCURATE FOR STAGE CONSTRUCTION AND TRAFFIC HANDLING WORK ONLY

STAGE 1B
STAGE CONSTRUCTION AND TRAFFIC HANDLING PLANS
SCALE: AS SHOWN

SC-7

REVISED BY | DATE REVISED
ROD ESTES | APOLINARIO VIVIT
CALCULATED-DESIGNED BY | CHECKED BY
FUNCTIONAL SUPERVISOR | APOLINARIO VIVIT
STATE OF CALIFORNIA - DEPARTMENT OF TRANSPORTATION
Caltrans® DESIGN
P:\proj\02\3E750_plans\pse\23e750ma007.dgn

LAST REVISION 05-27-11 | DATE PLOTTED => 01-JUN-2011 | TIME PLOTTED => 09:56

Dist	COUNTY	ROUTE	POST MILES TOTAL PROJECT	SHEET No.	TOTAL SHEETS
02	Sis	5	R19/R25.3	60	149

REGISTERED CIVIL ENGINEER 05-27-11 DATE

05-27-11
PLANS APPROVAL DATE

REGISTERED PROFESSIONAL ENGINEER APOLINARIO W. VIVIT No. C66046 Exp. 06-30-12 CIVIL STATE OF CALIFORNIA

THE STATE OF CALIFORNIA OR ITS OFFICERS OR AGENTS SHALL NOT BE RESPONSIBLE FOR THE ACCURACY OR COMPLETENESS OF SCANNED COPIES OF THIS PLAN SHEET.

NOTE:

1. K-RAIL OFFSETS MEASURED TO CENTERLINE OF BARRIER.

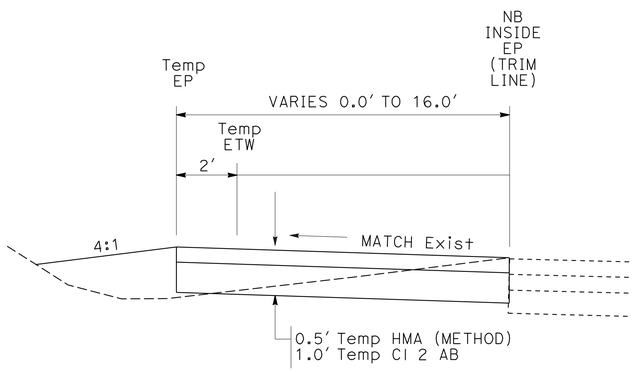

TYPICAL CROSS SECTION
"B1" 153+36.06 TO "B1" 157+40.93
NO SCALE

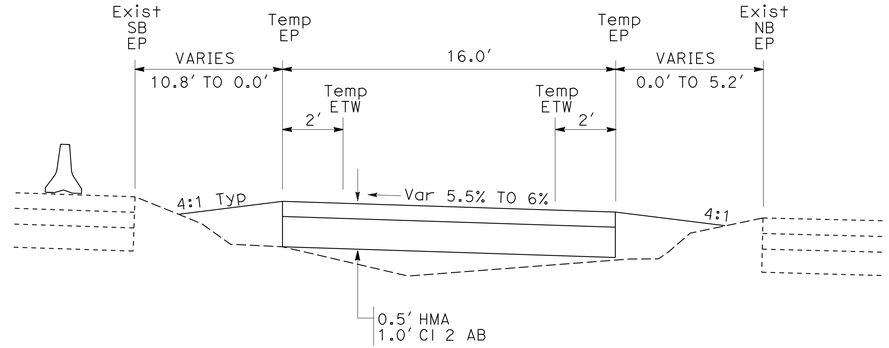

TYPICAL CROSS SECTION
"B1" 157+40.93 TO "B1" 158+50.15
NO SCALE

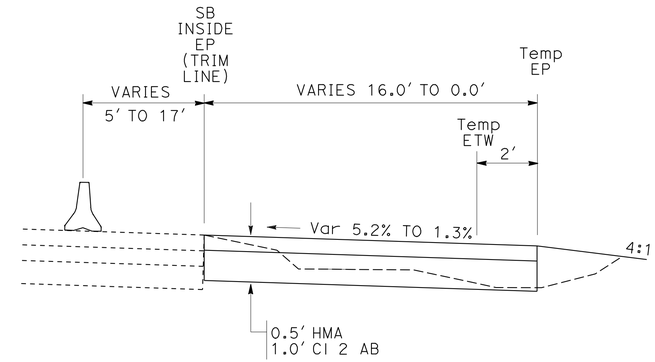

TYPICAL CROSS SECTION
"B1" 158+50.15 TO "B1" 160+20.86
NO SCALE

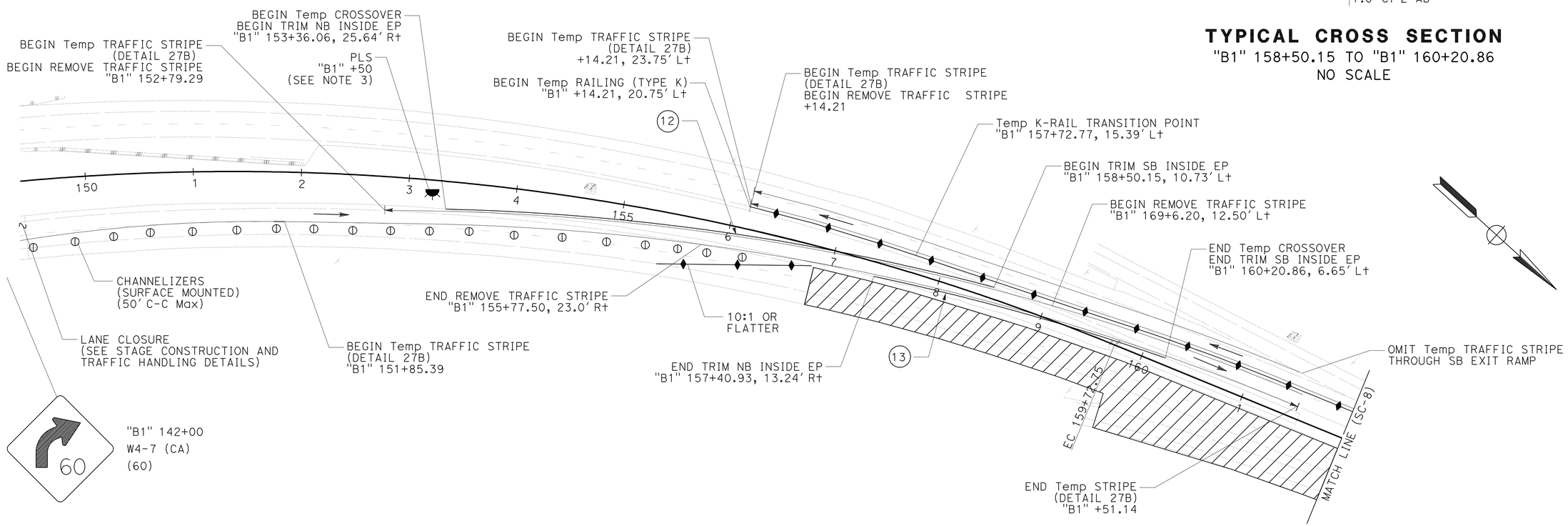

CURVE DATA

No. ⊕	R	Δ	T	L
12	2186'	13°27'37"	257.96'	513.55'
13	2170'	7°23'49"	140.27'	280.15'

TEMPORARY CROSSOVER (SOUTH NB TO SB)
SCALE: 1" = 50'
PM 20.1

THIS PLAN ACCURATE FOR STAGE CONSTRUCTION AND TRAFFIC HANDLING WORK ONLY

STAGE 2
STAGE CONSTRUCTION AND TRAFFIC HANDLING PLANS
SCALE: AS SHOWN

SC-8

REVISED BY | DATE REVISED
ROD ESTES | APOLINARIO VIVIT
CALCULATED-DESIGNED BY | CHECKED BY
FUNCTIONAL SUPERVISOR | APOLINARIO VIVIT
STATE OF CALIFORNIA - DEPARTMENT OF TRANSPORTATION
Caltrans DESIGN

P:\proj1\02\3E750_plans\pse\23e750ma008.dgn

LAST REVISION 05-27-11 | DATE PLOTTED => 01-JUN-2011 | TIME PLOTTED => 09:56

Dist	COUNTY	ROUTE	POST MILES TOTAL PROJECT	SHEET No.	TOTAL SHEETS
02	Sis	5	R19/R25.3	61	149

REGISTERED CIVIL ENGINEER DATE 05-27-11

PLANS APPROVAL DATE 05-27-11

REGISTERED PROFESSIONAL ENGINEER APOLINARIO W. VIVIT No. C66046 Exp. 06-30-12 CIVIL STATE OF CALIFORNIA

THE STATE OF CALIFORNIA OR ITS OFFICERS OR AGENTS SHALL NOT BE RESPONSIBLE FOR THE ACCURACY OR COMPLETENESS OF SCANNED COPIES OF THIS PLAN SHEET.

STAGE 2 WORK ITEMS:

CONSTRUCT SOUTH Temp CROSSOVER (NB TO SB)
REMOVE RUMBLE STRIP ON SB LANES (INSIDE AND OUTSIDE SHOULDERS)
COLDPLANE NB LANES 0.9' OR TO PCC PAVEMENT
COLDPLANE EDGEWOOD NB ON-RAMP
COLDPLANE EDGEWOOD UC NB BRIDGE DECK
FLUSH EDGEDRAINS
CRACK AND SEAT PCC PAVEMEMENT
PLACE HMA TO 0.15' FROM FG
PLACE TEMPORARY STRIPE (NB)
REMOVE TEMPORARY STRIPE
RECONSTRUCT MIDDLE Temp CROSSOVER (NB TO SB)
REMOVE STAGE 2 TRAFFIC CONTROL

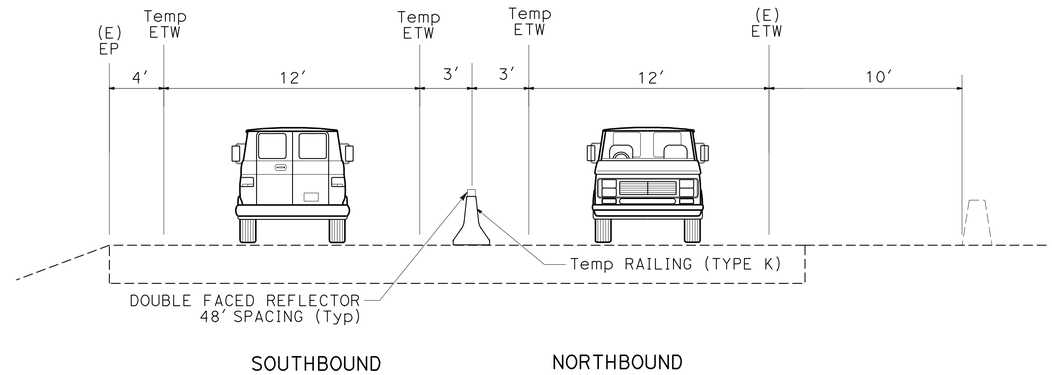

TYPICAL CROSS SECTION

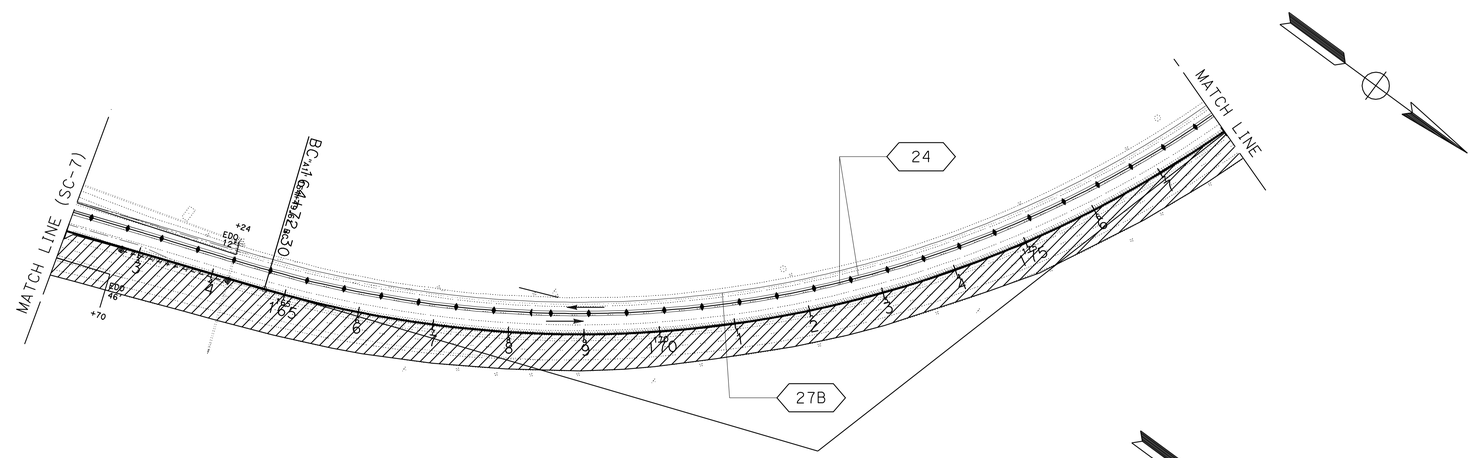

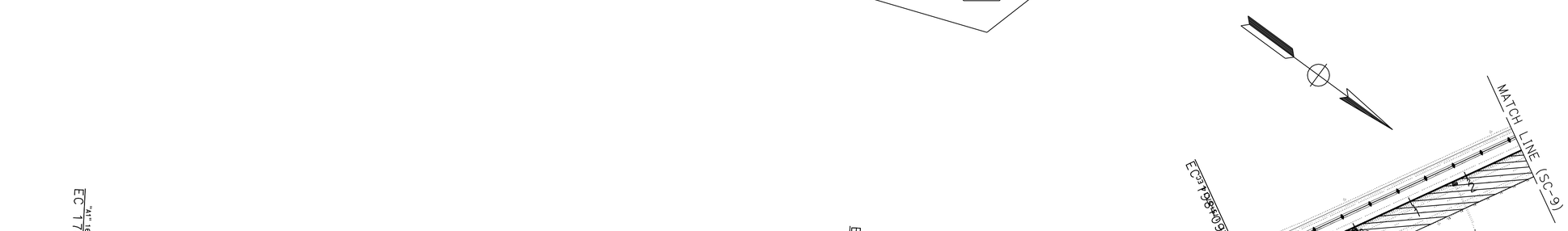

THIS PLAN ACCURATE FOR STAGE CONSTRUCTION AND TRAFFIC HANDLING WORK ONLY

STAGE 2
STAGE CONSTRUCTION AND TRAFFIC HANDLING PLANS
NO SCALE

SC-9

STATE OF CALIFORNIA - DEPARTMENT OF TRANSPORTATION
Caltrans® **DESIGN**
FUNCTIONAL SUPERVISOR: APOLINARIO VIVIT
CALCULATED-DESIGNED BY: APOLINARIO VIVIT
CHECKED BY: LORI EWENS
REVISED BY
DATE REVISED

P:\proj1\02\3E750_plans\pse\23e750ma009.dgn

LAST REVISION 05-27-11
DATE PLOTTED => 01-JUN-2011
TIME PLOTTED => 09:56

BORDER LAST REVISED 7/2/2010
USERNAME => s115152
DGN FILE => 23e750ma009.dgn
RELATIVE BORDER SCALE IS IN INCHES 0 1 2 3
UNIT 0317
PROJECT NUMBER & PHASE 02000201611

Dist	COUNTY	ROUTE	POST MILES TOTAL PROJECT	SHEET No.	TOTAL SHEETS
02	Sis	5	R19/R25.3	62	149

REGISTERED CIVIL ENGINEER 05-27-11 DATE

05-27-11
PLANS APPROVAL DATE

REGISTERED PROFESSIONAL ENGINEER
APOLINARIO W. VIVIT
No. C66046
Exp. 06-30-12
CIVIL
STATE OF CALIFORNIA

THE STATE OF CALIFORNIA OR ITS OFFICERS OR AGENTS SHALL NOT BE RESPONSIBLE FOR THE ACCURACY OR COMPLETENESS OF SCANNED COPIES OF THIS PLAN SHEET.

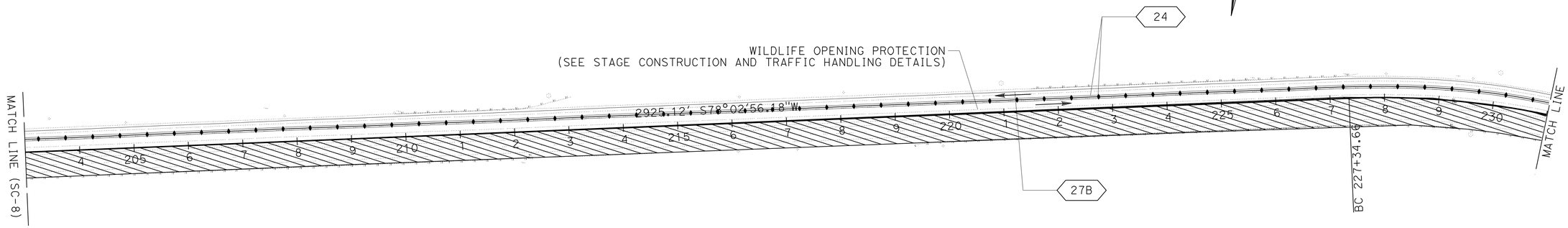

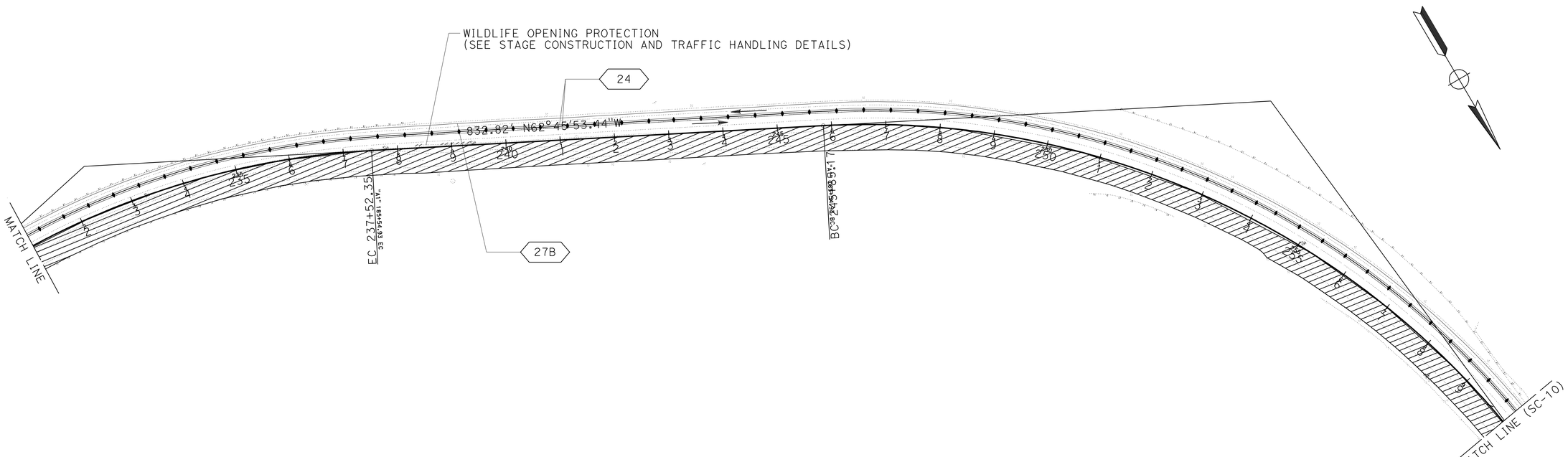

STAGE 2
STAGE CONSTRUCTION AND TRAFFIC HANDLING PLANS

NO SCALE

SC-10

THIS PLAN ACCURATE FOR STAGE CONSTRUCTION AND TRAFFIC HANDLING WORK ONLY

REVISED BY	DATE REVISED
APOLINARIO VIVIT	
LORI EWENS	
CALCULATED-DESIGNED BY	
CHECKED BY	
FUNCTIONAL SUPERVISOR	
APOLINARIO VIVIT	

STATE OF CALIFORNIA - DEPARTMENT OF TRANSPORTATION
Caltrans
DESIGN

P:\proj1\02\3E750_plans\pse\23e750ma010.dgn

LAST REVISION 05-27-11 | DATE PLOTTED => 01-JUN-2011 | TIME PLOTTED => 09:56

BORDER LAST REVISED 7/2/2010 | USERNAME => s115152 | DGN FILE => 23e750ma010.dgn | RELATIVE BORDER SCALE IS IN INCHES 0 1 2 3 | UNIT 0317 | PROJECT NUMBER & PHASE 02000201611

Dist	COUNTY	ROUTE	POST MILES TOTAL PROJECT	SHEET No.	TOTAL SHEETS
02	Sis	5	R19/R25.3	63	149

REGISTERED CIVIL ENGINEER 05-27-11 DATE

05-27-11
PLANS APPROVAL DATE

REGISTERED PROFESSIONAL ENGINEER
APOLINARIO W. VIVIT
No. C66046
Exp. 06-30-12
CIVIL
STATE OF CALIFORNIA

THE STATE OF CALIFORNIA OR ITS OFFICERS OR AGENTS SHALL NOT BE RESPONSIBLE FOR THE ACCURACY OR COMPLETENESS OF SCANNED COPIES OF THIS PLAN SHEET.

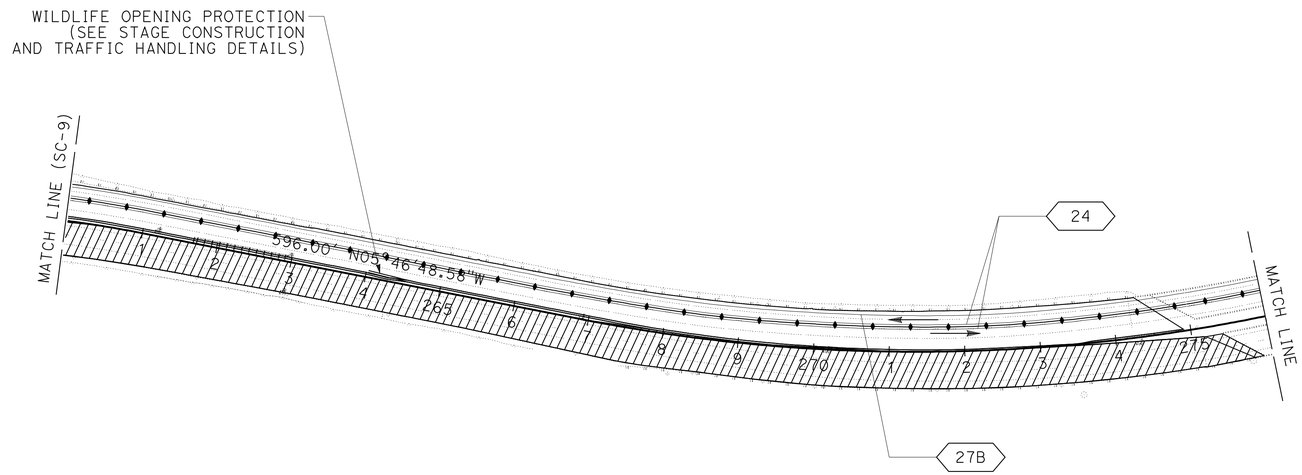

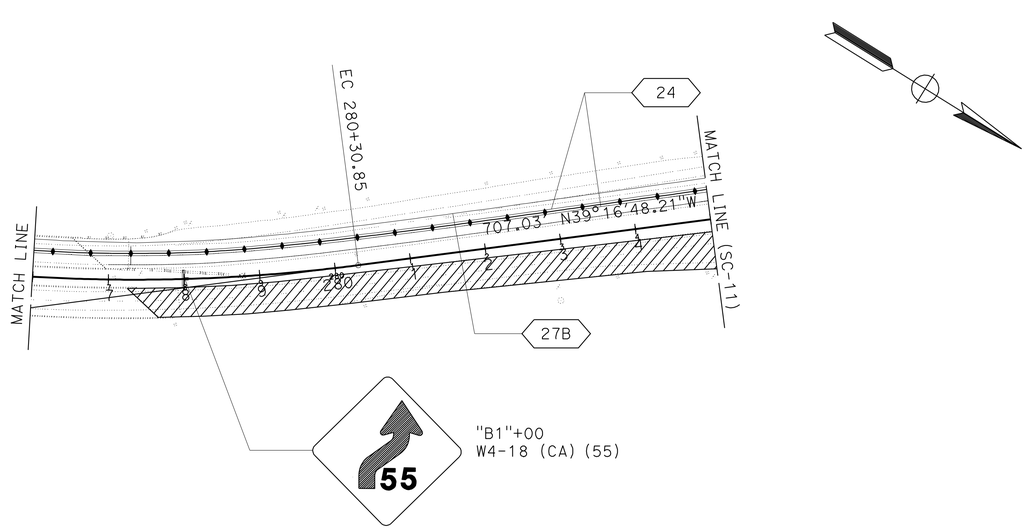

THIS PLAN ACCURATE FOR STAGE CONSTRUCTION AND TRAFFIC HANDLING WORK ONLY

STAGE 2

STAGE CONSTRUCTION AND TRAFFIC HANDLING PLANS

NO SCALE

SC-11

REVISED BY	APOLINARIO VIVIT
DATE REVISED	LORI EWENS
CALCULATED-DESIGNED BY	
CHECKED BY	
FUNCTIONAL SUPERVISOR	APOLINARIO VIVIT

STATE OF CALIFORNIA - DEPARTMENT OF TRANSPORTATION
Caltrans
DESIGN

P:\proj1\02\3E750_plans\pse\23e750ma011.dgn

LAST REVISION 05-27-11 | DATE PLOTTED => 01-JUN-2011 | TIME PLOTTED => 09:57

Dist	COUNTY	ROUTE	POST MILES TOTAL PROJECT	SHEET No.	TOTAL SHEETS
02	Sis	5	R19/R25.3	64	149

REGISTERED CIVIL ENGINEER 05-27-11 DATE

05-27-11
PLANS APPROVAL DATE

REGISTERED PROFESSIONAL ENGINEER APOLINARIO W. VIVIT No. C66046 Exp. 06-30-12 CIVIL STATE OF CALIFORNIA

THE STATE OF CALIFORNIA OR ITS OFFICERS OR AGENTS SHALL NOT BE RESPONSIBLE FOR THE ACCURACY OR COMPLETENESS OF SCANNED COPIES OF THIS PLAN SHEET.

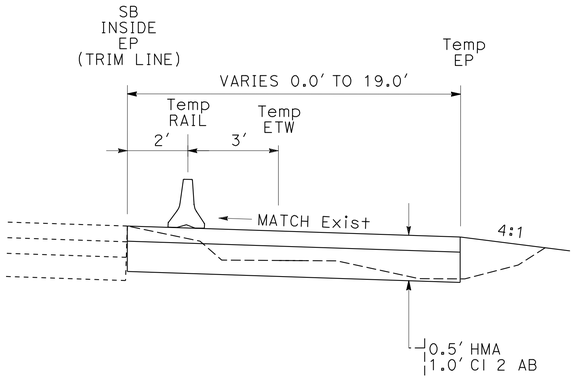

TYPICAL CROSS SECTION
"B1" 286+58.85 TO "B1" 288+92.00
NO SCALE

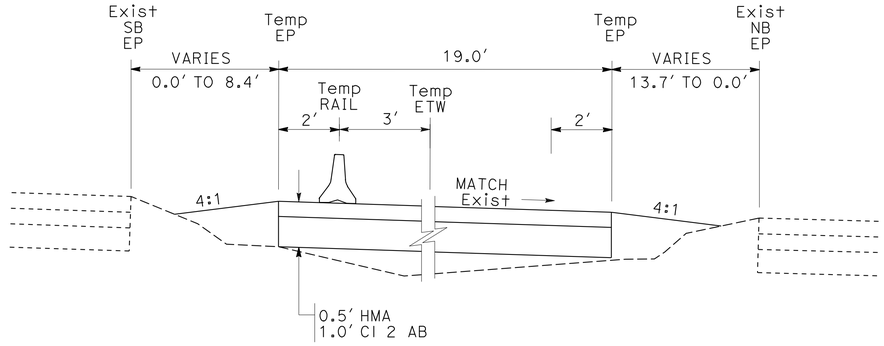

TYPICAL CROSS SECTION
"B1" 288+92.00 TO "B1" 291+04.45
NO SCALE

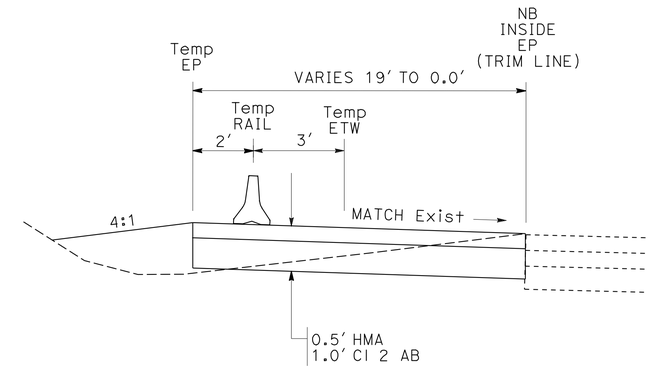

TYPICAL CROSS SECTION
"B1" 291+04.45 TO "B1" 292+47.65
NO SCALE

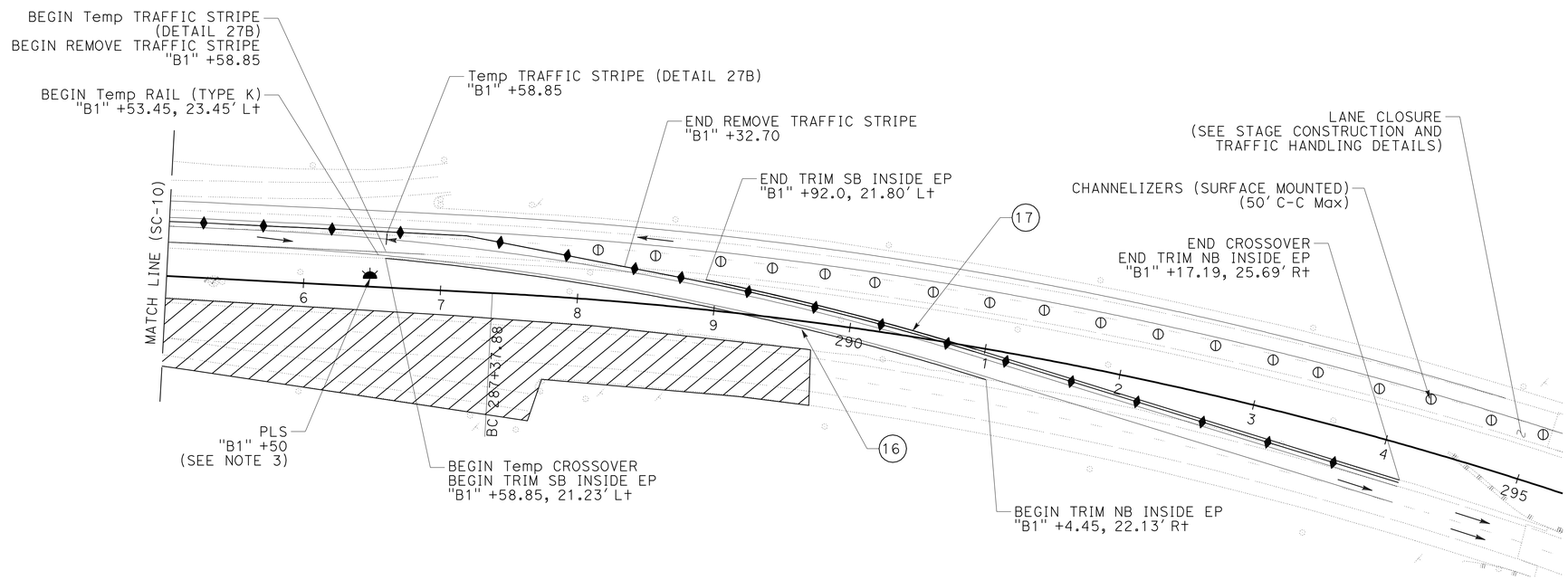

CURVE DATA

No. ⊕	R	Δ	T	L
16	2083'	12°18'49"	224.71'	447.69'
17	2102'	5°32'13"	101.65'	203.15'

PM 23
TEMPORARY CROSSOVER (MIDDLE SB TO NB)
SCALE: 1" = 50'

THIS PLAN ACCURATE FOR STAGE CONSTRUCTION AND TRAFFIC HANDLING WORK ONLY

STAGE 2
STAGE CONSTRUCTION AND TRAFFIC HANDLING PLANS
SCALE: AS SHOWN

SC-12

REVISED BY | DATE REVISED
ROD ESTES | APOLINARIO VIVIT
CALCULATED-DESIGNED BY | CHECKED BY
FUNCTIONAL SUPERVISOR | APOLINARIO VIVIT
STATE OF CALIFORNIA - DEPARTMENT OF TRANSPORTATION
Caltrans
DESIGN

P:\proj1\02\3E750_plans\pse\23e750ma012.dgn

LAST REVISION 05-27-11 | DATE PLOTTED => 01-JUN-2011 | TIME PLOTTED => 09:57

Dist	COUNTY	ROUTE	POST MILES TOTAL PROJECT	SHEET No.	TOTAL SHEETS
02	Sis	5	R19/R25.3	65	149

REGISTERED CIVIL ENGINEER 05-27-11 DATE

05-27-11
PLANS APPROVAL DATE

REGISTERED PROFESSIONAL ENGINEER APOLINARIO W. VIVIT No. C66046 Exp. 06-30-12 CIVIL STATE OF CALIFORNIA

THE STATE OF CALIFORNIA OR ITS OFFICERS OR AGENTS SHALL NOT BE RESPONSIBLE FOR THE ACCURACY OR COMPLETENESS OF SCANNED COPIES OF THIS PLAN SHEET.

NOTE:

1. K-RAIL OFFSETS MEASURED TO CENTERLINE OF BARRIER.

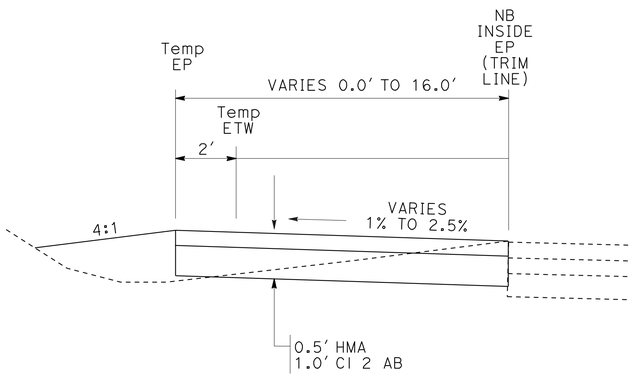

TYPICAL CROSS SECTION
"B1" 285+10.85 TO "B1" 287+15.15
NO SCALE

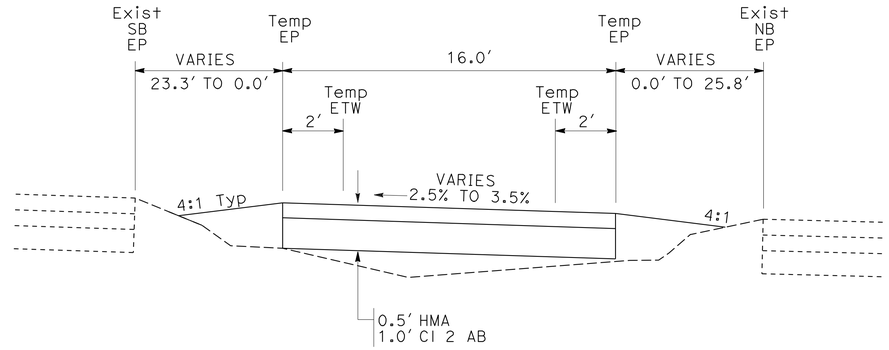

TYPICAL CROSS SECTION
"B1" 287+15.15 TO "B1" 289+78.41
NO SCALE

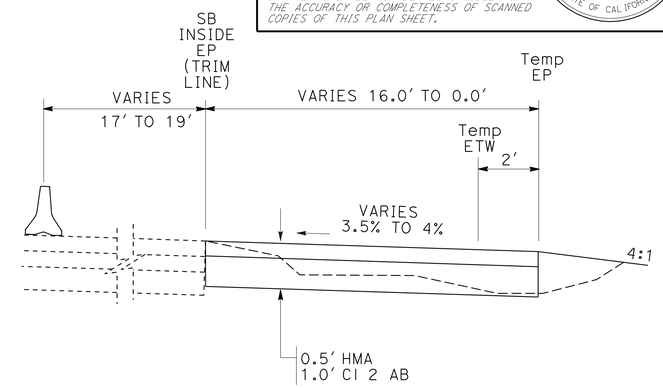

TYPICAL CROSS SECTION
"B1" 289+78.41 TO "B1" 292+23.89
NO SCALE

CURVE DATA

No. ⊕	R	Δ	T	L
18	2100'	10°7'40"	186.09'	371.20'
19	2116'	3°25'05"	63.13'	126.23'

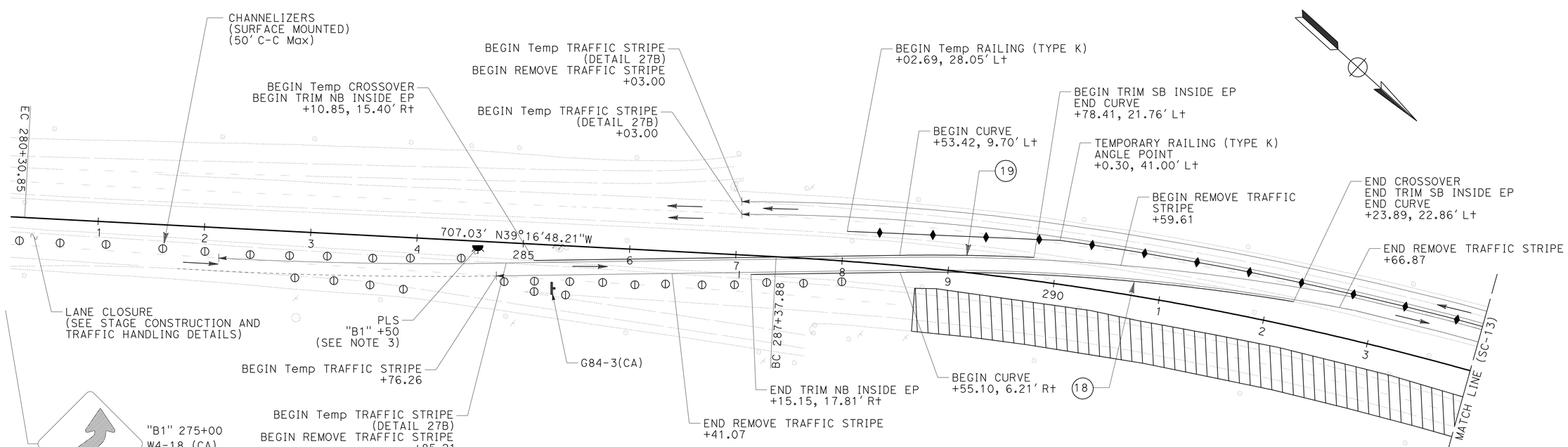

PM 23
TEMPORARY CROSSOVER (MIDDLE NB TO SB)
SCALE: 1" = 50'

STAGE 3
STAGE CONSTRUCTION AND TRAFFIC HANDLING PLANS
SCALE: AS SHOWN

SC-13

THIS PLAN ACCURATE FOR STAGE CONSTRUCTION AND TRAFFIC HANDLING WORK ONLY

REVISED BY | DATE REVISED
ROD ESTES | APOLINARIO VIVIT
CALCULATED-DESIGNED BY | CHECKED BY
FUNCTIONAL SUPERVISOR | APOLINARIO VIVIT
STATE OF CALIFORNIA - DEPARTMENT OF TRANSPORTATION
Caltrans
DESIGN

P:\proj1\02\3E750_plans\pse\23e750ma013.dgn

LAST REVISION 05-27-11 | DATE PLOTTED => 01-JUN-2011 | TIME PLOTTED => 09:57

Dist	COUNTY	ROUTE	POST MILES TOTAL PROJECT	SHEET No.	TOTAL SHEETS
02	Sis	5	R19/R25.3	66	149

REGISTERED CIVIL ENGINEER 05-27-11 DATE

05-27-11
PLANS APPROVAL DATE

REGISTERED PROFESSIONAL ENGINEER
APOLINARIO W. VIVIT
No. C66046
Exp. 06-30-12
CIVIL
STATE OF CALIFORNIA

THE STATE OF CALIFORNIA OR ITS OFFICERS OR AGENTS SHALL NOT BE RESPONSIBLE FOR THE ACCURACY OR COMPLETENESS OF SCANNED COPIES OF THIS PLAN SHEET.

STAGE 3A WORK ITEMS:

CONSTRUCT MIDDLE Temp CROSSOVER (SB TO NB)
CONSTRUCT NORTH Temp CROSSOVER (NB TO SB
COLD PLANE AC PAVEMENT SB LANES
COLD PLANE EDGEWOOD SB OFF-RAMP
COLD PLANE EDGEWOOD UC SB BRIDGE DECK
REMOVE AND CONSTRUCT SB EDGEDRAINS
REMOVE AC DIKE
CRACK AND SEAT PCC PAVEMEMENT
PLACE HMA TO FG
CONSTUCT 0.15′ OVERLAY TO STAGE 2
PLACE HMA DIKE
RECONSTRUCT MBGR
REMOVE STAGE 3 CROSSOVER TRAFFIC CONTROL

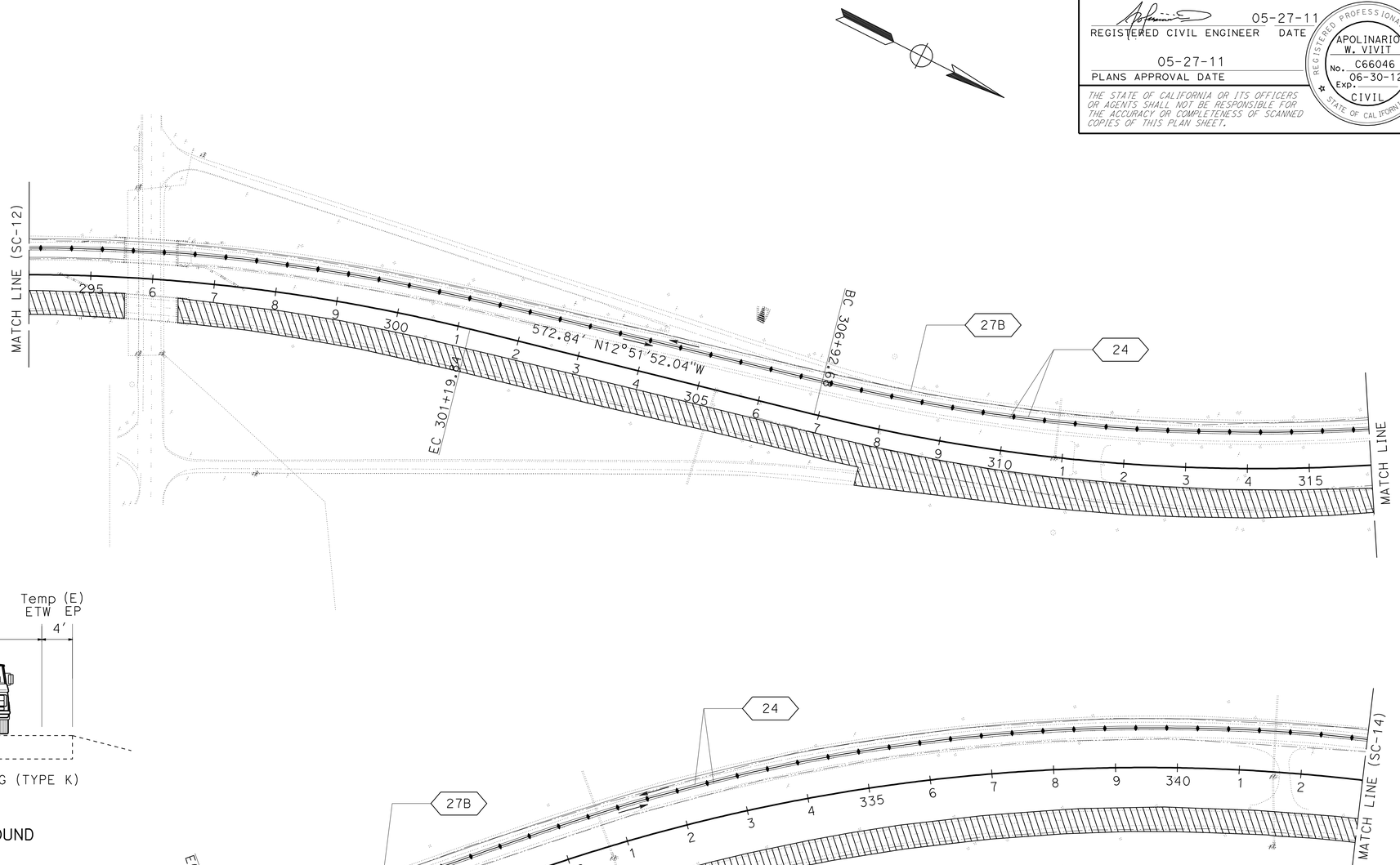

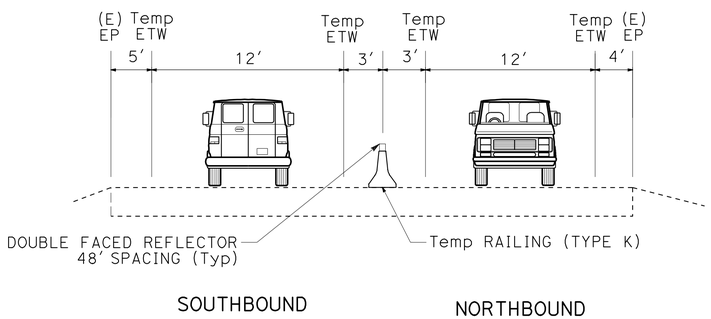

TYPICAL CROSS SECTION

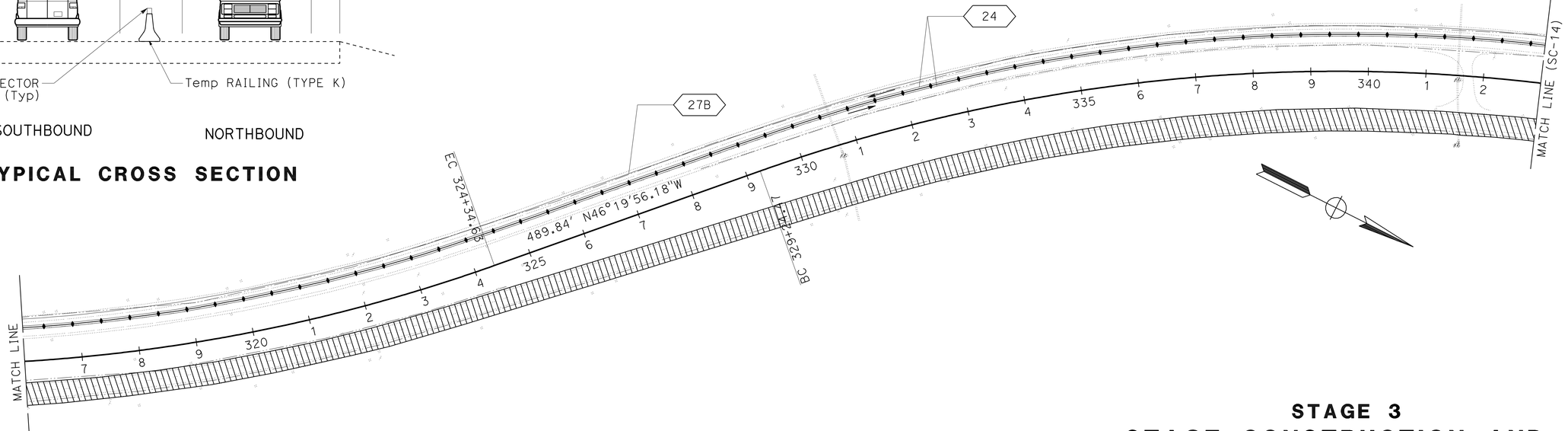

THIS PLAN ACCURATE FOR STAGE CONSTRUCTION AND TRAFFIC HANDLING WORK ONLY

STAGE 3
STAGE CONSTRUCTION AND TRAFFIC HANDLING PLANS
NO SCALE

SC-14

REVISED BY	DATE REVISED
APOLINARIO VIVIT	LORI EWENS

CALCULATED-DESIGNED BY
CHECKED BY
FUNCTIONAL SUPERVISOR: APOLINARIO VIVIT

STATE OF CALIFORNIA - DEPARTMENT OF TRANSPORTATION
Caltrans
DESIGN

P:\proj1\02\3E750_plans\pse\23e750ma014.dgn

LAST REVISION 05-27-11
DATE PLOTTED => 01-JUN-2011
TIME PLOTTED => 09:57

Dist	COUNTY	ROUTE	POST MILES TOTAL PROJECT	SHEET No.	TOTAL SHEETS
02	Sis	5	R19/R25.3	67	149

REGISTERED CIVIL ENGINEER 05-27-11 DATE

05-27-11
PLANS APPROVAL DATE

REGISTERED PROFESSIONAL ENGINEER
APOLINARIO W. VIVIT
No. C66046
Exp. 06-30-12
CIVIL
STATE OF CALIFORNIA

THE STATE OF CALIFORNIA OR ITS OFFICERS OR AGENTS SHALL NOT BE RESPONSIBLE FOR THE ACCURACY OR COMPLETENESS OF SCANNED COPIES OF THIS PLAN SHEET.

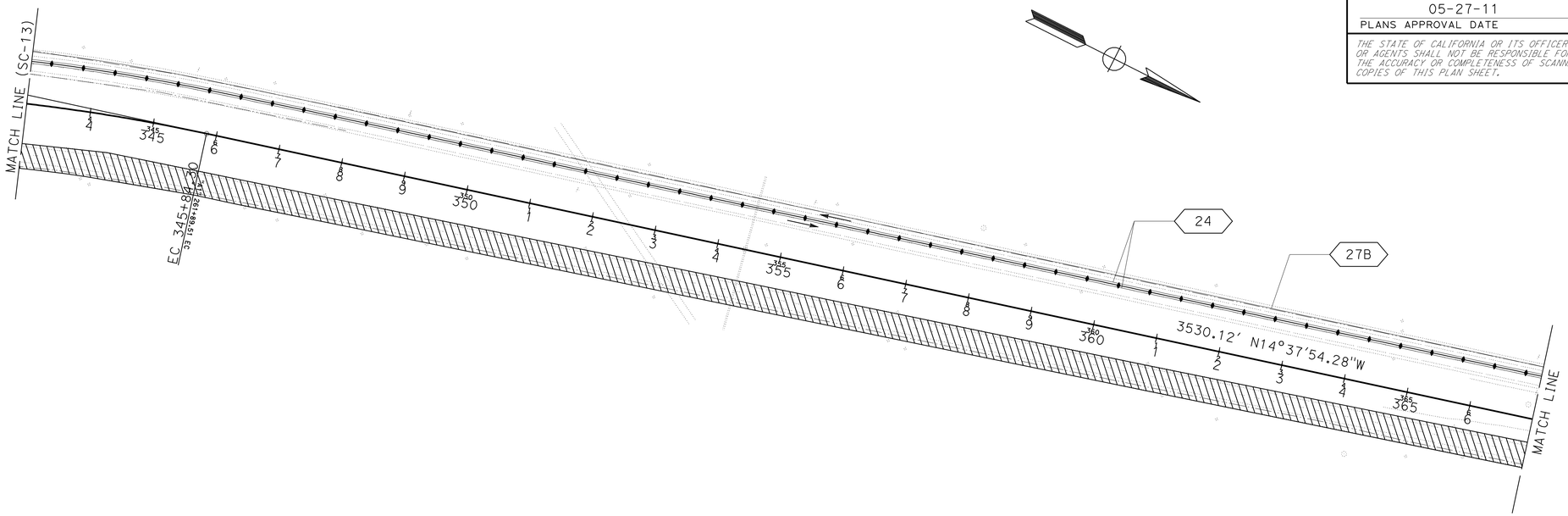

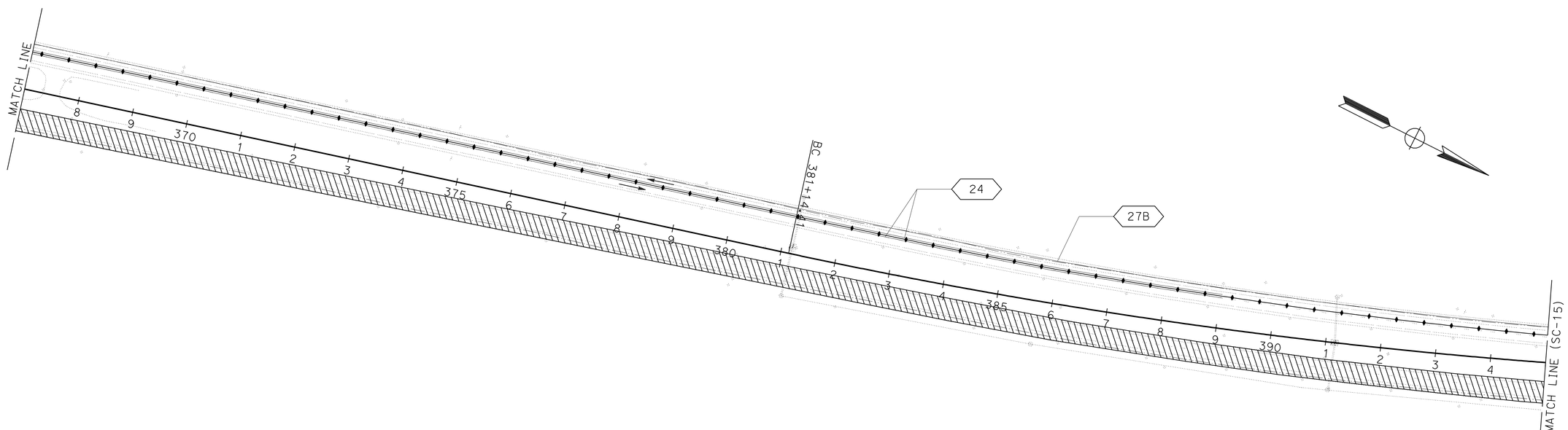

THIS PLAN ACCURATE FOR STAGE CONSTRUCTION AND TRAFFIC HANDLING WORK ONLY

STAGE 3
STAGE CONSTRUCTION AND TRAFFIC HANDLING PLANS
NO SCALE

SC-15

REVISED BY	
DATE REVISED	
CALCULATED-DESIGNED BY	APOLINARIO VIVIT
CHECKED BY	LORI EWENS
FUNCTIONAL SUPERVISOR	APOLINARIO VIVIT

STATE OF CALIFORNIA - DEPARTMENT OF TRANSPORTATION
Caltrans
DESIGN

P:\proj1\02\3E750_plans\pse\23e750ma015.dgn

LAST REVISION 05-27-11 | DATE PLOTTED => 01-JUN-2011 | TIME PLOTTED => 09:57

Dist	COUNTY	ROUTE	POST MILES TOTAL PROJECT	SHEET No.	TOTAL SHEETS
02	Sis	5	R19/R25.3	68	149

REGISTERED CIVIL ENGINEER 05-27-11 DATE

05-27-11
PLANS APPROVAL DATE

REGISTERED PROFESSIONAL ENGINEER
APOLINARIO W. VIVIT
No. C66046
Exp. 06-30-12
CIVIL
STATE OF CALIFORNIA

THE STATE OF CALIFORNIA OR ITS OFFICERS OR AGENTS SHALL NOT BE RESPONSIBLE FOR THE ACCURACY OR COMPLETENESS OF SCANNED COPIES OF THIS PLAN SHEET.

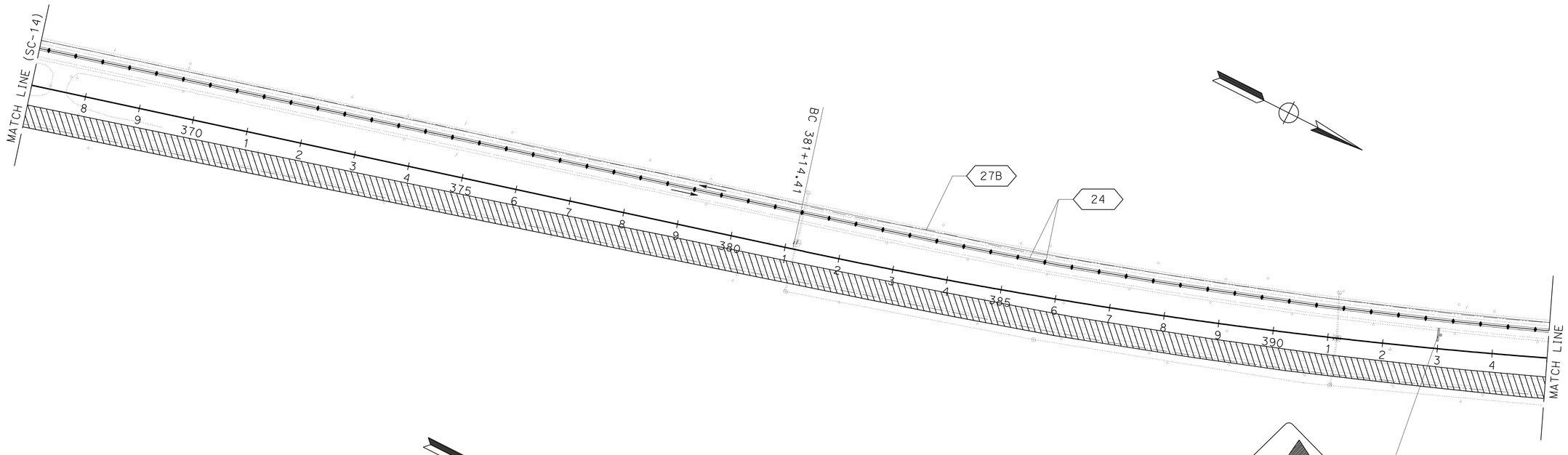

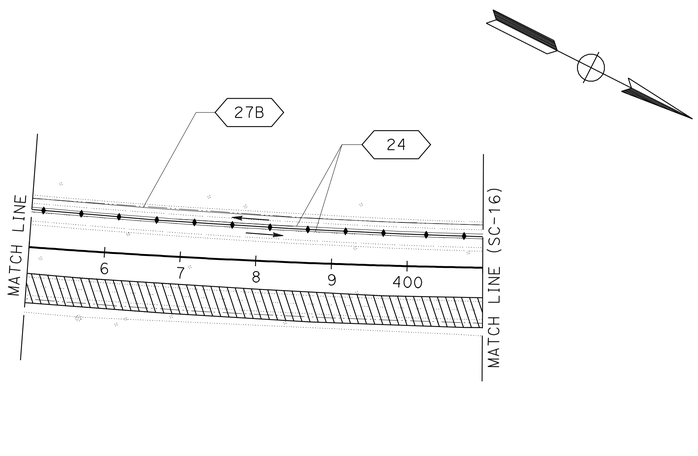

THIS PLAN ACCURATE FOR STAGE CONSTRUCTION AND TRAFFIC HANDLING WORK ONLY

STAGE 3
STAGE CONSTRUCTION AND TRAFFIC HANDLING PLANS

NO SCALE

SC-16

REVISED BY	DATE REVISED

CALCULATED-DESIGNED BY	APOLINARIO VIVIT
CHECKED BY	LORI EWENS
FUNCTIONAL SUPERVISOR	APOLINARIO VIVIT

STATE OF CALIFORNIA - DEPARTMENT OF TRANSPORTATION
Caltrans
DESIGN

P:\proj1\02\3E750_plans\pse\23e750ma016.dgn

LAST REVISION 05-27-11 | DATE PLOTTED => 01-JUN-2011 | TIME PLOTTED => 09:57

Dist	COUNTY	ROUTE	POST MILES TOTAL PROJECT	SHEET No.	TOTAL SHEETS
02	Sis	5	R19/R25.3	69	149

REGISTERED CIVIL ENGINEER 05-27-11 DATE

05-27-11
PLANS APPROVAL DATE

REGISTERED PROFESSIONAL ENGINEER APOLINARIO W. VIVIT No. C66046 Exp. 06-30-12 CIVIL STATE OF CALIFORNIA

THE STATE OF CALIFORNIA OR ITS OFFICERS OR AGENTS SHALL NOT BE RESPONSIBLE FOR THE ACCURACY OR COMPLETENESS OF SCANNED COPIES OF THIS PLAN SHEET.

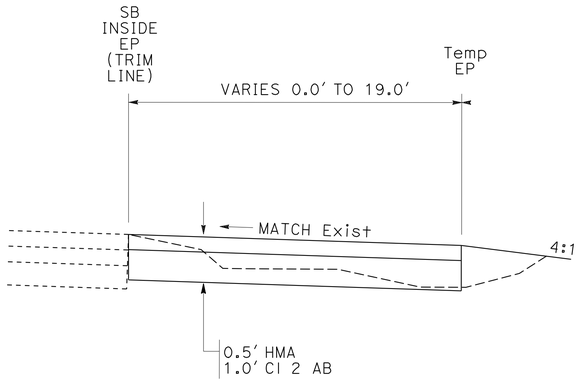

TYPICAL CROSS SECTION
"B1" 402+67.35 TO "B1" 405+63.01
NO SCALE

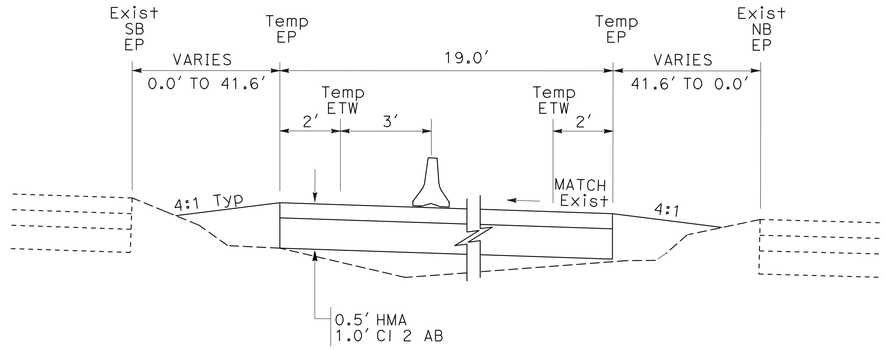

TYPICAL CROSS SECTION
"B1" 405+63.01 TO "B1" 409+01.07
NO SCALE

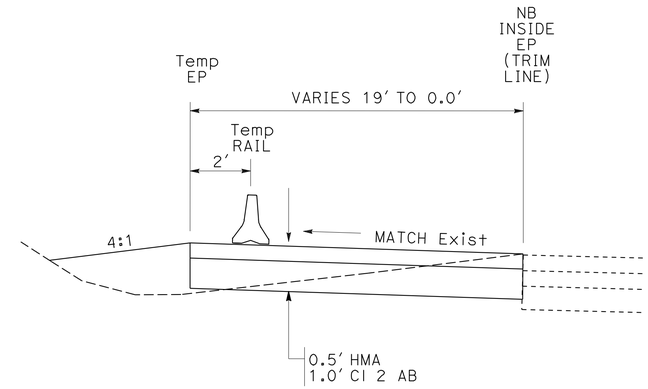

TYPICAL CROSS SECTION
"B1" 409+01.07 TO "B1" 410+87.14
NO SCALE

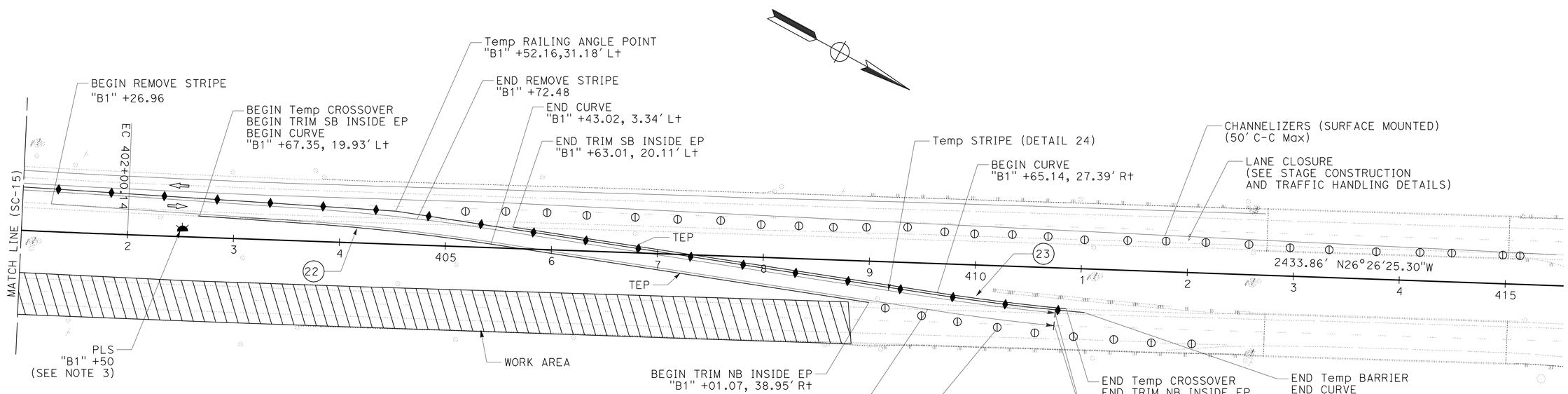

CURVE DATA

No.	R	Δ	T	L
22	2096′	4°52′25"	89.20′	178.29′
23	2085′	3°21′57"	61.26′	122.48′

PM 25.3
TEMPORARY CROSSOVER (NORTH SB TO NB)
SCALE: 1" = 50′

THIS PLAN ACCURATE FOR STAGE CONSTRUCTION AND TRAFFIC HANDLING WORK ONLY

STAGE 3
STAGE CONSTRUCTION AND TRAFFIC HANDLING PLANS
SCALE: AS SHOWN

SC-17

REVISED BY | DATE REVISED
APOLINARIO VIVIT | LORI EWENS
CALCULATED-DESIGNED BY | CHECKED BY
FUNCTIONAL SUPERVISOR: APOLINARIO VIVIT

STATE OF CALIFORNIA - DEPARTMENT OF TRANSPORTATION
Caltrans
DESIGN

P:\proj1\02\3E750_plans\pse\23e750ma017.dgn

LAST REVISION 05-27-11 | DATE PLOTTED => 01-JUN-2011 | TIME PLOTTED => 09:57

Dist	COUNTY	ROUTE	POST MILES TOTAL PROJECT	SHEET No.	TOTAL SHEETS
02	Sis	5	R19/R25.3	70	149

REGISTERED CIVIL ENGINEER 05-27-11 DATE

05-27-11
PLANS APPROVAL DATE

REGISTERED PROFESSIONAL ENGINEER APOLINARIO W. VIVIT No. C66046 Exp. 06-30-12 CIVIL STATE OF CALIFORNIA

THE STATE OF CALIFORNIA OR ITS OFFICERS OR AGENTS SHALL NOT BE RESPONSIBLE FOR THE ACCURACY OR COMPLETENESS OF SCANNED COPIES OF THIS PLAN SHEET.

NOTE:

1. FOR TRAFFIC HANDLING PLAN SEE TRAFFIC HANDLING DETAILS, SHEET THD-4.

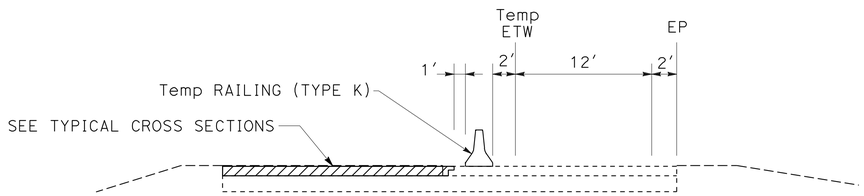

TYPICAL CROSS SECTION
LEFT SIDE
NO SCALE

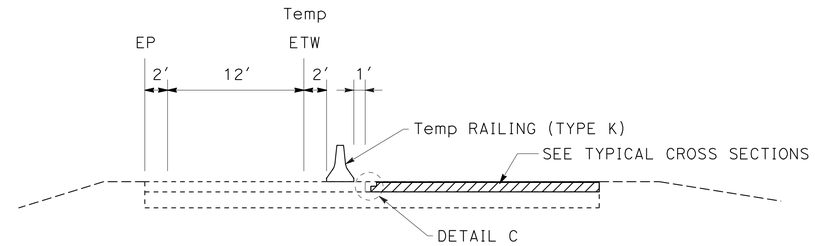

TYPICAL CROSS SECTION
RIGHT SIDE
NO SCALE

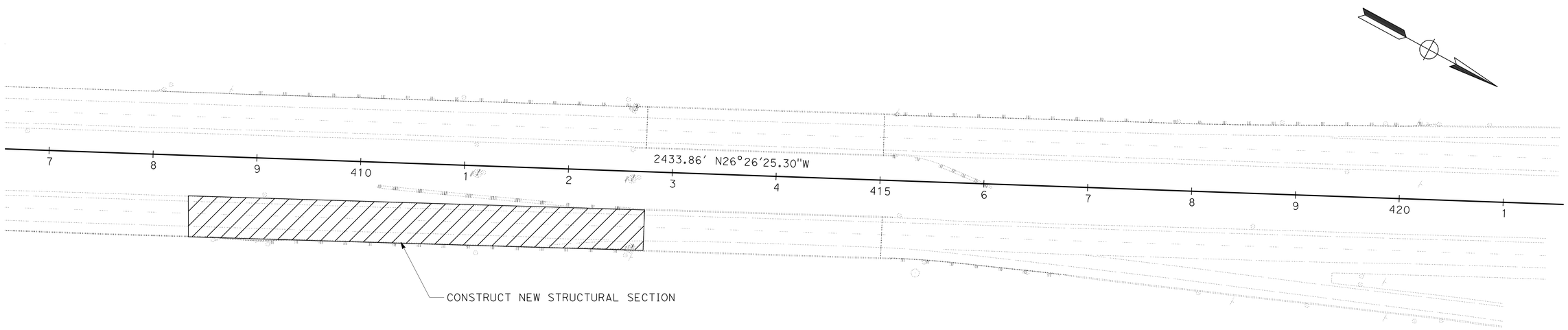

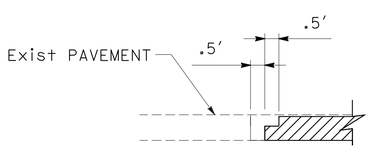

DETAIL C
STAGGER HMA LIFTS

STAGE 3B WORK ITEMS:

CONSTRUCT RIGHT SIDE OF NB LANES
CONSTRUCT LEFT SIDE OF NB LANES
REMOVE STAGE 3 TRAFFIC CONTROL
CONSTRUCTION FINAL 0.15′ LIFT FOR STAGES 2 AND 3
PLACE FINAL STRIPING

SCALE: 1″ = 50′
PM 25.3

THIS PLAN ACCURATE FOR STAGE CONSTRUCTION AND TRAFFIC HANDLING WORK ONLY

STAGE 3B
STAGE CONSTRUCTION AND TRAFFIC HANDLING PLANS
SCALE: AS SHOWN

SC-18

REVISED BY | DATE REVISED
ROD ESTES | APOLINARIO VIVIT
CALCULATED-DESIGNED BY | CHECKED BY
FUNCTIONAL SUPERVISOR | APOLINARIO VIVIT
STATE OF CALIFORNIA - DEPARTMENT OF TRANSPORTATION
Caltrans® DESIGN

P:\proj\02\3E750_plans\pse\23e750ma018.dgn

LAST REVISION 05-27-11 | DATE PLOTTED => 01-JUN-2011 TIME PLOTTED => 09:57

Dist	COUNTY	ROUTE	POST MILES TOTAL PROJECT	SHEET No.	TOTAL SHEETS
02	Sis	5	R19/R25.3	71	149

REGISTERED CIVIL ENGINEER 05-27-11 DATE

05-27-11
PLANS APPROVAL DATE

REGISTERED PROFESSIONAL ENGINEER APOLINARIO W. VIVIT No. C66046 Exp. 06-30-12 CIVIL STATE OF CALIFORNIA

THE STATE OF CALIFORNIA OR ITS OFFICERS OR AGENTS SHALL NOT BE RESPONSIBLE FOR THE ACCURACY OR COMPLETENESS OF SCANNED COPIES OF THIS PLAN SHEET.

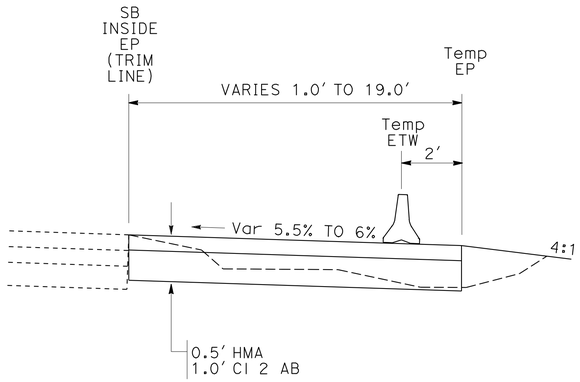

TYPICAL CROSS SECTION
"B1" 152+54.52 TO "B1" 156+18.95
NO SCALE

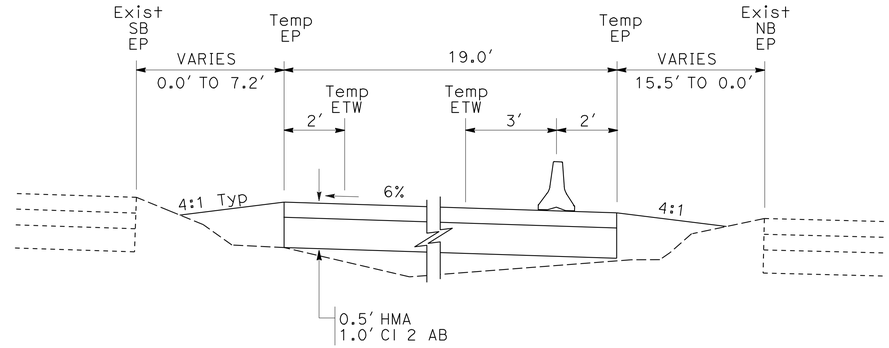

TYPICAL CROSS SECTION
"B1" 156+18.95 TO "B1" 157+48.47
NO SCALE

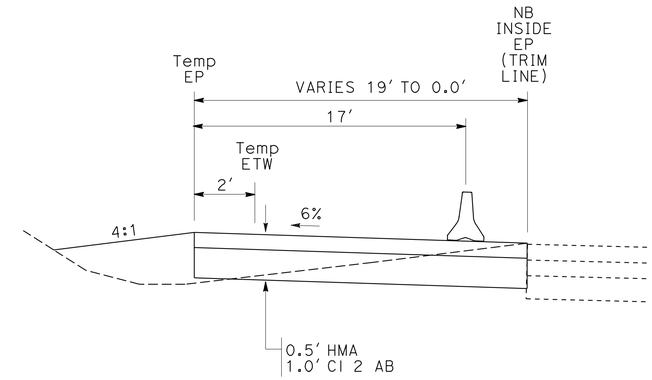

TYPICAL CROSS SECTION
"B1" 157+48.47 TO "B1" 159+11.57
NO SCALE

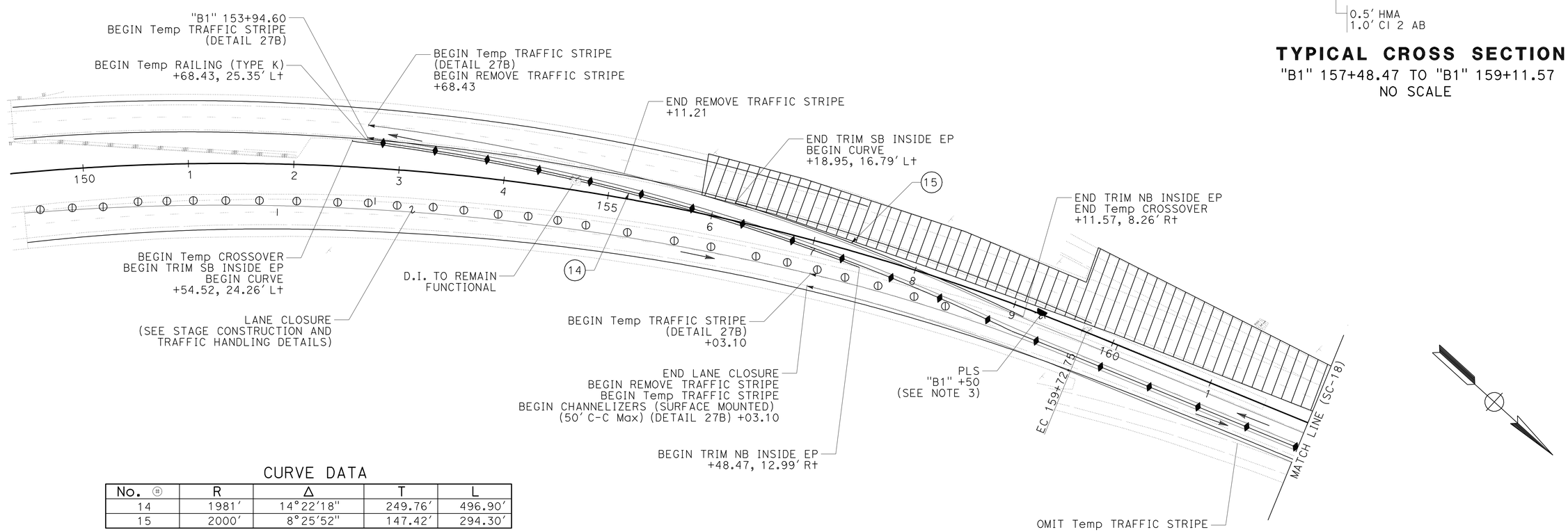

CURVE DATA

No. ⊕	R	Δ	T	L
14	1981′	14°22′18"	249.76′	496.90′
15	2000′	8°25′52"	147.42′	294.30′

PM 20.1
TEMPORARY CROSSOVER (SOUTH SB TO NB)
SCALE: 1" = 50′

STAGE 4
STAGE CONSTRUCTION AND TRAFFIC HANDLING PLANS
SCALE: AS SHOWN

THIS PLAN ACCURATE FOR STAGE CONSTRUCTION AND TRAFFIC HANDLING WORK ONLY

SC-19

REVISED BY | DATE REVISED
ROD ESTES | APOLINARIO VIVIT
CALCULATED-DESIGNED BY | CHECKED BY
FUNCTIONAL SUPERVISOR | APOLINARIO VIVIT
STATE OF CALIFORNIA - DEPARTMENT OF TRANSPORTATION
Caltrans® DESIGN

P:\proj1\02\3E750_plans\pse\23e750ma019.dgn

LAST REVISION 05-27-11 | DATE PLOTTED => 01-JUN-2011 TIME PLOTTED => 09:58

Dist	COUNTY	ROUTE	POST MILES TOTAL PROJECT	SHEET No.	TOTAL SHEETS
02	Sis	5	R19/R25.3	72	149

REGISTERED CIVIL ENGINEER 05-27-11 DATE

05-27-11
PLANS APPROVAL DATE

REGISTERED PROFESSIONAL ENGINEER
APOLINARIO W. VIVIT
No. C66046
Exp. 06-30-12
CIVIL
STATE OF CALIFORNIA

THE STATE OF CALIFORNIA OR ITS OFFICERS OR AGENTS SHALL NOT BE RESPONSIBLE FOR THE ACCURACY OR COMPLETENESS OF SCANNED COPIES OF THIS PLAN SHEET.

STAGE 4 WORK ITEMS:

CONSTRUCT SOUTH Temp CROSSOVER (NB TO SB)
COLDPLANE NB LANES 0.9′ OR TO PCC PAVEMENT
COLDPLANE EDGEWOOD NB ON-RAMP
COLDPLANE EDGEWOOD UC NB BRIDGE DECK
FLUSH EDGEDRAINS
CRACK AND SEAT PCC PAVEMEMENT
PLACE HMA TO FG
CONSTRUCT 0.15′ OVERLAY TO STAGE 1 AREA
REMOVE STAGE 4 TRAFFIC CONTROL
REMOVE CROSSOVERS
PLACE FINAL STRIPING (SB)

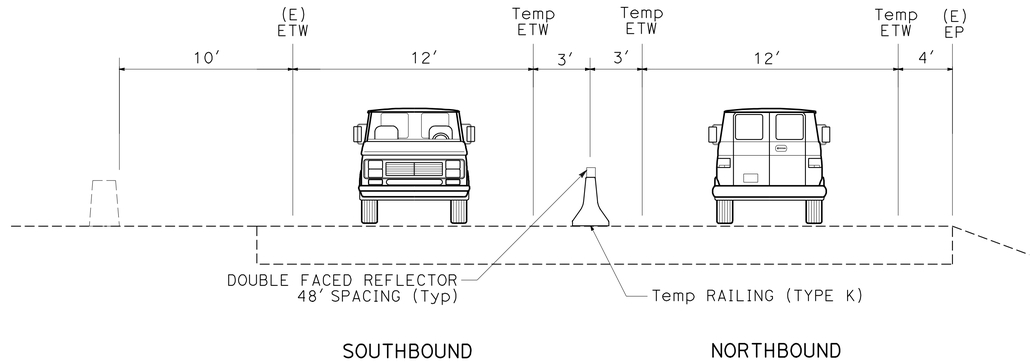

TYPICAL CROSS SECTION

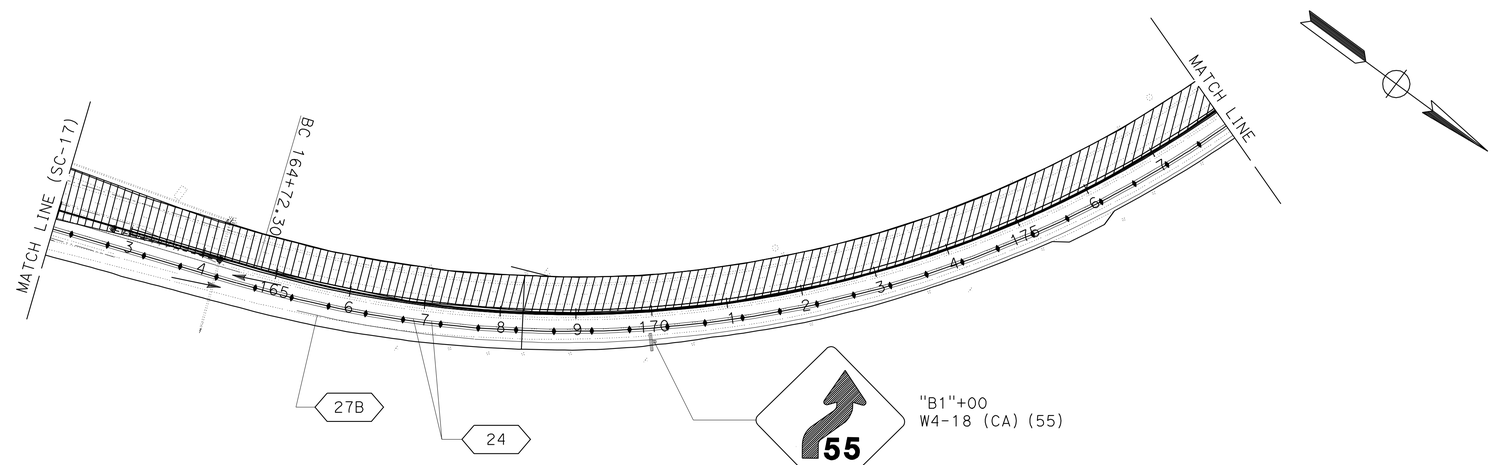

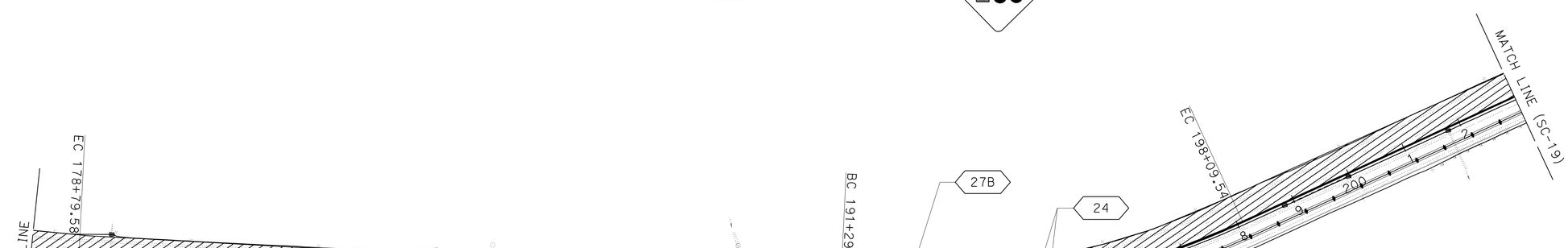

THIS PLAN ACCURATE FOR STAGE CONSTRUCTION AND TRAFFIC HANDLING WORK ONLY

STAGE 4
STAGE CONSTRUCTION AND TRAFFIC HANDLING PLANS

NO SCALE

SC-20

REVISED BY	DATE REVISED
APOLINARIO VIVIT	LORI EWENS

CALCULATED-DESIGNED BY
CHECKED BY

FUNCTIONAL SUPERVISOR: APOLINARIO VIVIT

STATE OF CALIFORNIA - DEPARTMENT OF TRANSPORTATION
Caltrans
DESIGN

P:\proj1\02\3E750_plans\pse\23e750ma020.dgn

LAST REVISION 05-27-11
DATE PLOTTED => 01-JUN-2011
TIME PLOTTED => 09:58

Dist	COUNTY	ROUTE	POST MILES TOTAL PROJECT	SHEET No.	TOTAL SHEETS
02	Sis	5	R19/R25.3	73	149

REGISTERED CIVIL ENGINEER 05-27-11 DATE

05-27-11
PLANS APPROVAL DATE

REGISTERED PROFESSIONAL ENGINEER
APOLINARIO W. VIVIT
No. C66046
Exp. 06-30-12
CIVIL
STATE OF CALIFORNIA

THE STATE OF CALIFORNIA OR ITS OFFICERS OR AGENTS SHALL NOT BE RESPONSIBLE FOR THE ACCURACY OR COMPLETENESS OF SCANNED COPIES OF THIS PLAN SHEET.

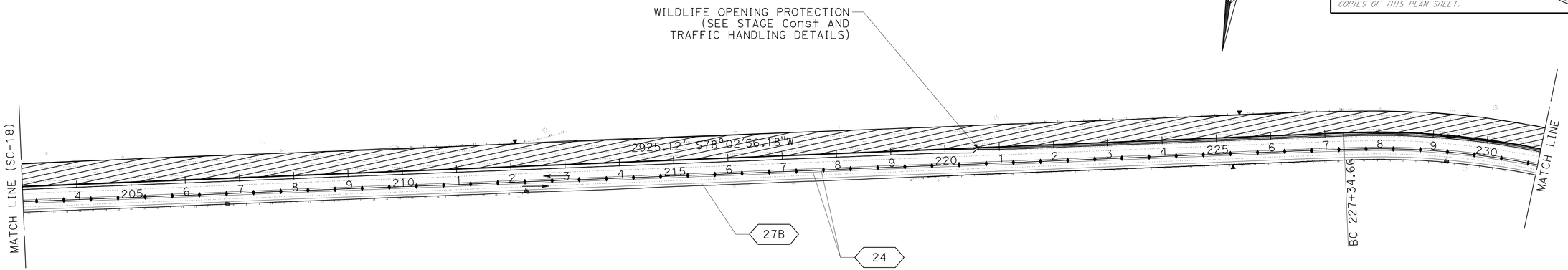

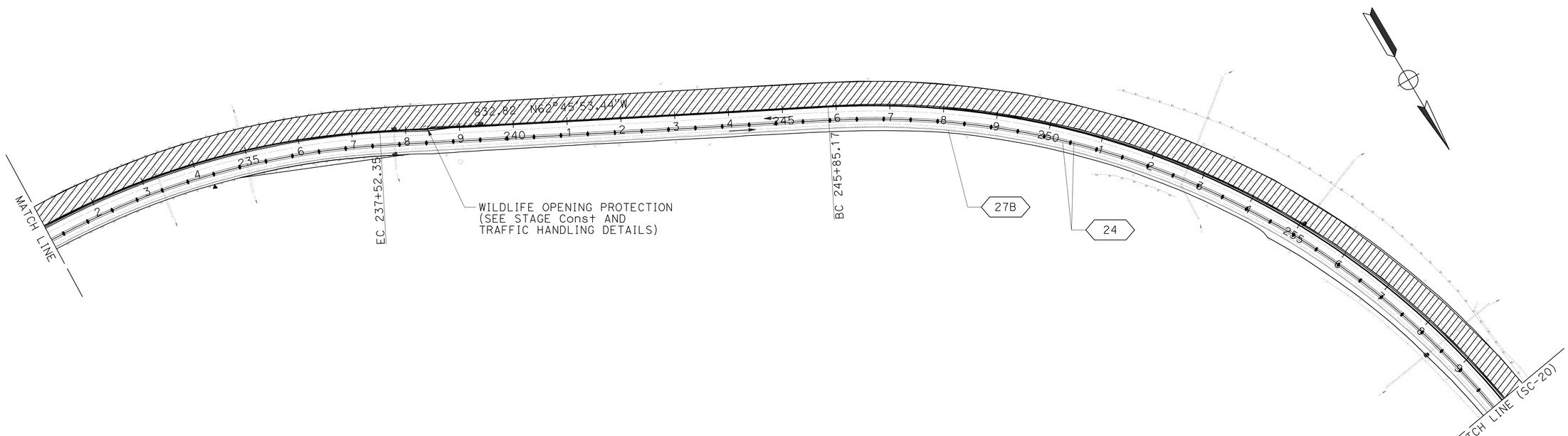

STAGE 4
STAGE CONSTRUCTION AND TRAFFIC HANDLING PLANS

NO SCALE

THIS PLAN ACCURATE FORSTAGE CONSTRUCTION AND TRAFFIC HANDLING WORK ONLY

SC-21

REVISED BY	DATE REVISED
APOLINARIO VIVIT	
LORI EWENS	

CALCULATED-DESIGNED BY	CHECKED BY

FUNCTIONAL SUPERVISOR: APOLINARIO VIVIT

STATE OF CALIFORNIA - DEPARTMENT OF TRANSPORTATION
Caltrans
DESIGN

P:\proj1\02\3E750_plans\pse\23e750ma021.dgn

LAST REVISION 05-27-11 | DATE PLOTTED => 01-JUN-2011 | TIME PLOTTED => 09:58

Dist	COUNTY	ROUTE	POST MILES TOTAL PROJECT	SHEET No.	TOTAL SHEETS
02	Sis	5	R19/R25.3	74	149

REGISTERED CIVIL ENGINEER 05-27-11 DATE

05-27-11
PLANS APPROVAL DATE

REGISTERED PROFESSIONAL ENGINEER
APOLINARIO W. VIVIT
No. C66046
Exp. 06-30-12
CIVIL
STATE OF CALIFORNIA

THE STATE OF CALIFORNIA OR ITS OFFICERS OR AGENTS SHALL NOT BE RESPONSIBLE FOR THE ACCURACY OR COMPLETENESS OF SCANNED COPIES OF THIS PLAN SHEET.

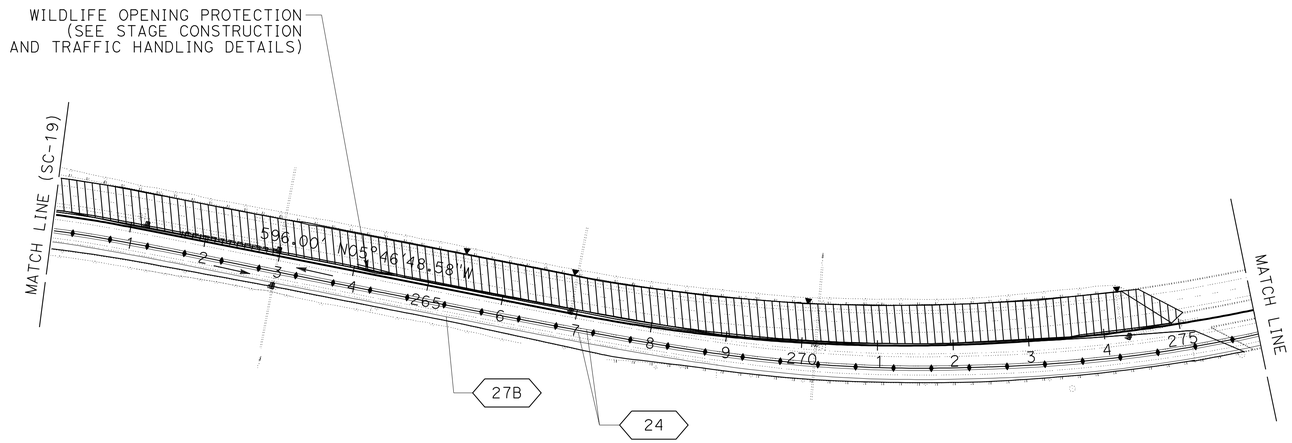

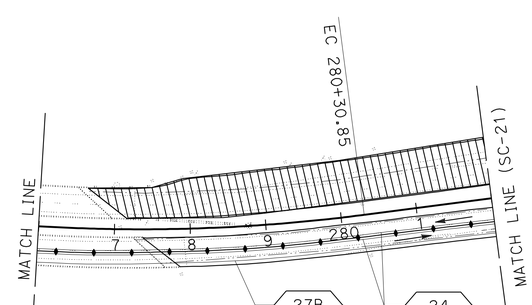

STAGE 4
STAGE CONSTRUCTION AND TRAFFIC HANDLING PLANS
NO SCALE

THIS PLAN ACCURATE FOR STAGE CONSTRUCTION AND TRAFFIC HANDLING WORK ONLY

SC-22

REVISED BY	DATE REVISED

CALCULATED-DESIGNED BY	CHECKED BY
APOLINARIO VIVIT	LORI EWENS

FUNCTIONAL SUPERVISOR: APOLINARIO VIVIT

STATE OF CALIFORNIA - DEPARTMENT OF TRANSPORTATION
Caltrans
DESIGN

P:\proj1\02\3E750_plans\pse\23e750ma022.dgn

LAST REVISION 05-27-11 | DATE PLOTTED => 01-JUN-2011 | TIME PLOTTED => 09:58

Dist	COUNTY	ROUTE	POST MILES TOTAL PROJECT	SHEET No.	TOTAL SHEETS
02	Sis	5	R19/R25.3	75	149

REGISTERED CIVIL ENGINEER 05-27-11 DATE

05-27-11
PLANS APPROVAL DATE

REGISTERED PROFESSIONAL ENGINEER APOLINARIO W. VIVIT No. C66046 Exp. 06-30-12 CIVIL STATE OF CALIFORNIA

THE STATE OF CALIFORNIA OR ITS OFFICERS OR AGENTS SHALL NOT BE RESPONSIBLE FOR THE ACCURACY OR COMPLETENESS OF SCANNED COPIES OF THIS PLAN SHEET.

NOTE:

1. K-RAIL OFFSETS MEASURED TO CENTERLINE OF BARRIER.

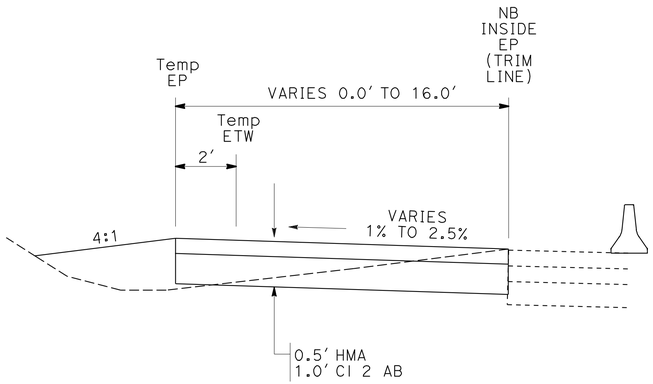

TYPICAL CROSS SECTION
"B1" 285+10.85 TO "B1" 287+15.15
NO SCALE

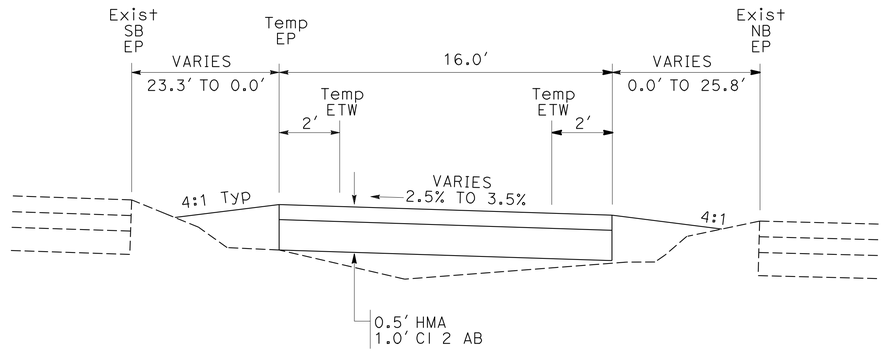

TYPICAL CROSS SECTION
"B1" 287+15.15 TO "B1" 289+78.41
NO SCALE

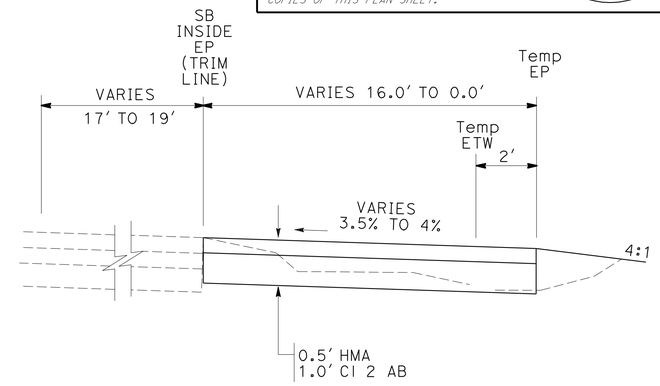

TYPICAL CROSS SECTION
"B1" 289+78.41 TO "B1" 292+23.89
NO SCALE

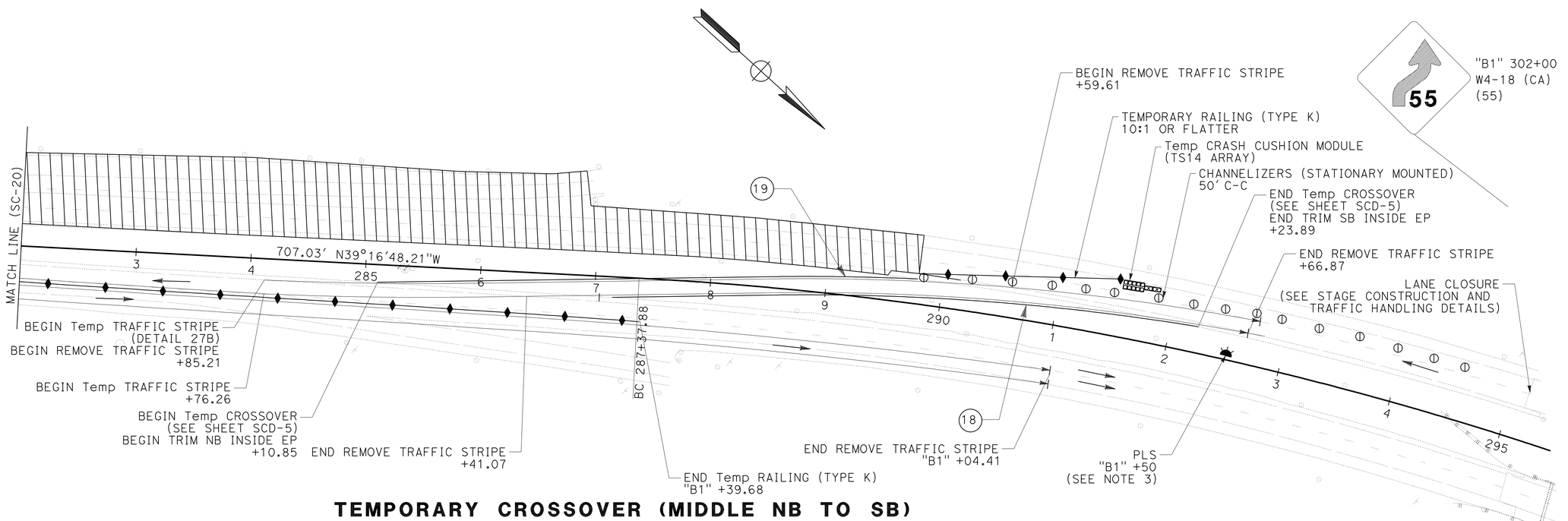

TEMPORARY CROSSOVER (MIDDLE NB TO SB)
SCALE: 1" = 50'
PM 23

THIS PLAN ACCURATE FOR STAGE CONSTRUCTION AND TRAFFIC HANDLING WORK ONLY

STAGE 4
STAGE CONSTRUCTION AND TRAFFIC HANDLING PLANS
SCALE: AS SHOWN
SC-23

REVISED BY | DATE REVISED
ROD ESTES | APOLINARIO VIVIT
CALCULATED-DESIGNED BY | CHECKED BY
FUNCTIONAL SUPERVISOR | APOLINARIO VIVIT
STATE OF CALIFORNIA - DEPARTMENT OF TRANSPORTATION
Caltrans
DESIGN

P:\proj1\02\3E750_plans\pse\23e750ma023.dgn

LAST REVISION 05-27-11 | DATE PLOTTED => 01-JUN-2011 TIME PLOTTED => 09:58

Dist	COUNTY	ROUTE	POST MILES TOTAL PROJECT	SHEET No.	TOTAL SHEETS
02	Sis	5	R19/R25.3	76	149

REGISTERED CIVIL ENGINEER DATE 05-27-11

05-27-11
PLANS APPROVAL DATE

REGISTERED PROFESSIONAL ENGINEER APOLINARIO W. VIVIT No. C66046 Exp. 06-30-12 CIVIL STATE OF CALIFORNIA

THE STATE OF CALIFORNIA OR ITS OFFICERS OR AGENTS SHALL NOT BE RESPONSIBLE FOR THE ACCURACY OR COMPLETENESS OF SCANNED COPIES OF THIS PLAN SHEET.

NOTE:

1. FOR TRAFFIC HANDLING APPROACHES SEE TRAFFIC HANDLING DETAILS (SHEET THD-2).

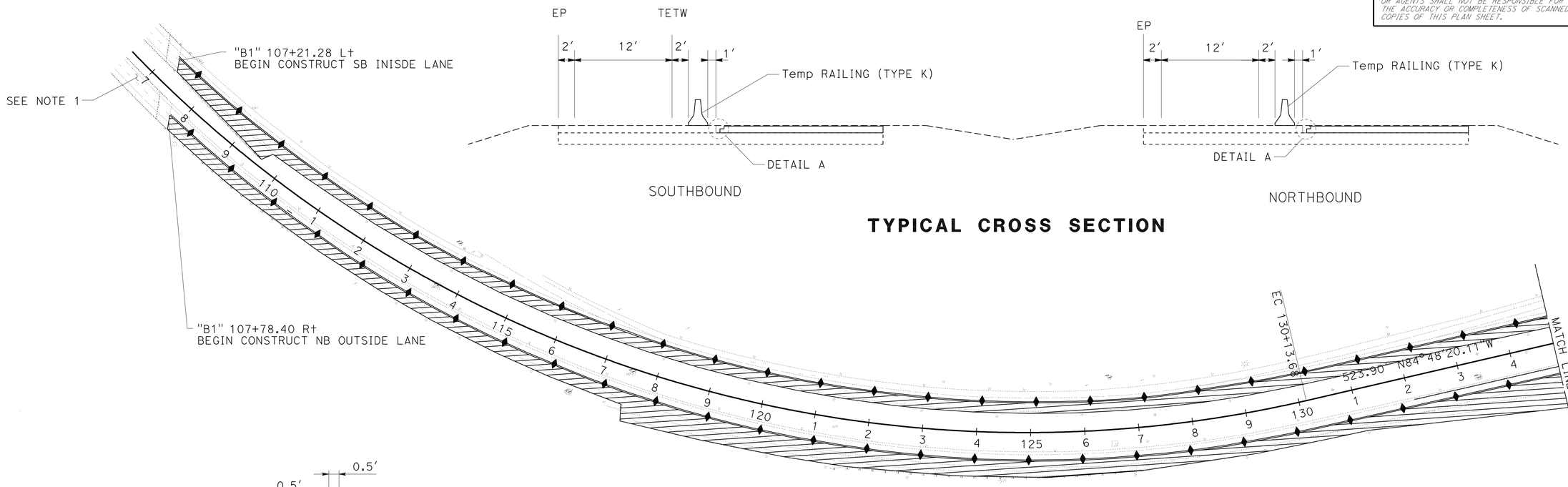

TYPICAL CROSS SECTION

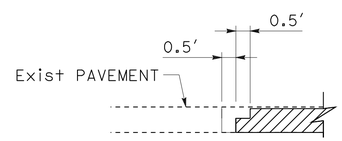

DETAIL A

STAGGER HMA LIFTS

STAGE 5 WORK ITEMS:

COLDPLANE AC PAVEMENT SB INSIDE LANE AND NB OUSIDE LANE
REMOVE AND CONSTRUCT EDGEDRAINS
PLACE HMA ON SB INSIDE LANE AND NB OUSIDE LANE TO 0.10′ FROM FG
REMOVE STAGE 5 TRAFFIC HANDLING

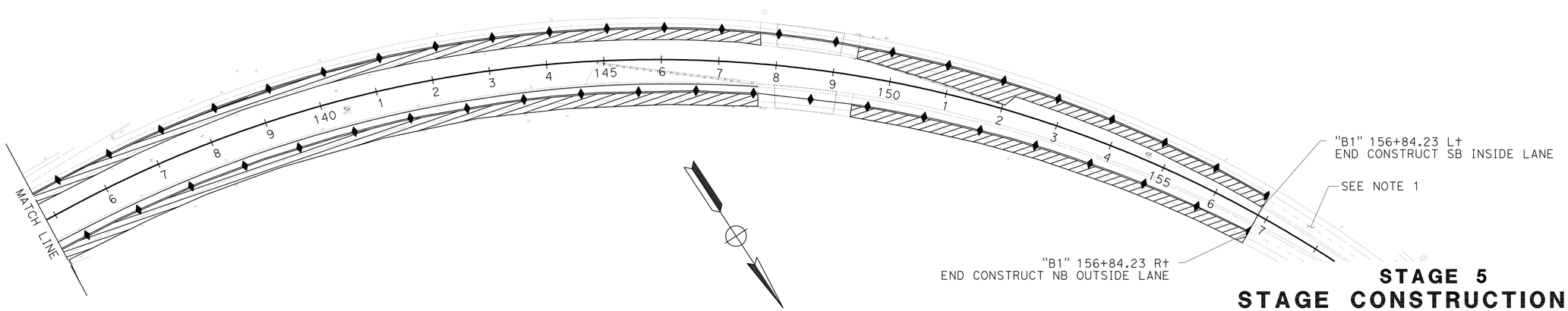

THIS PLAN ACCURATE FOR STAGE CONSTRUCITON AND TRAFFIC HANDLING WORK ONLY

STAGE 5
STAGE CONSTRUCTION AND TRAFFIC HANDLING PLANS

NO SCALE

SC-24

REVISED BY | DATE REVISED
APOLINARIO VIVIT | LORI EWENS
CALCULATED-DESIGNED BY | CHECKED BY
FUNCTIONAL SUPERVISOR | APOLINARIO VIVIT

STATE OF CALIFORNIA - DEPARTMENT OF TRANSPORTATION
Caltrans
DESIGN

P:\proj1\02\3E750_plans\pse\23e750ma024.dgn

LAST REVISION 05-27-11 | DATE PLOTTED => 01-JUN-2011 | TIME PLOTTED => 09:58

Dist	COUNTY	ROUTE	POST MILES TOTAL PROJECT	SHEET No.	TOTAL SHEETS
02	Sis	5	R19/R25.3	77	149

REGISTERED CIVIL ENGINEER DATE 05-27-11

05-27-11
PLANS APPROVAL DATE

REGISTERED PROFESSIONAL ENGINEER
APOLINARIO W. VIVIT
No. C66046
Exp. 06-30-12
CIVIL
STATE OF CALIFORNIA

THE STATE OF CALIFORNIA OR ITS OFFICERS OR AGENTS SHALL NOT BE RESPONSIBLE FOR THE ACCURACY OR COMPLETENESS OF SCANNED COPIES OF THIS PLAN SHEET.

NOTE:

1. FOR TRAFFIC HANDLING APPROACHES SEE TRAFFIC HANDLING DETAILS (SHEET THD-3).

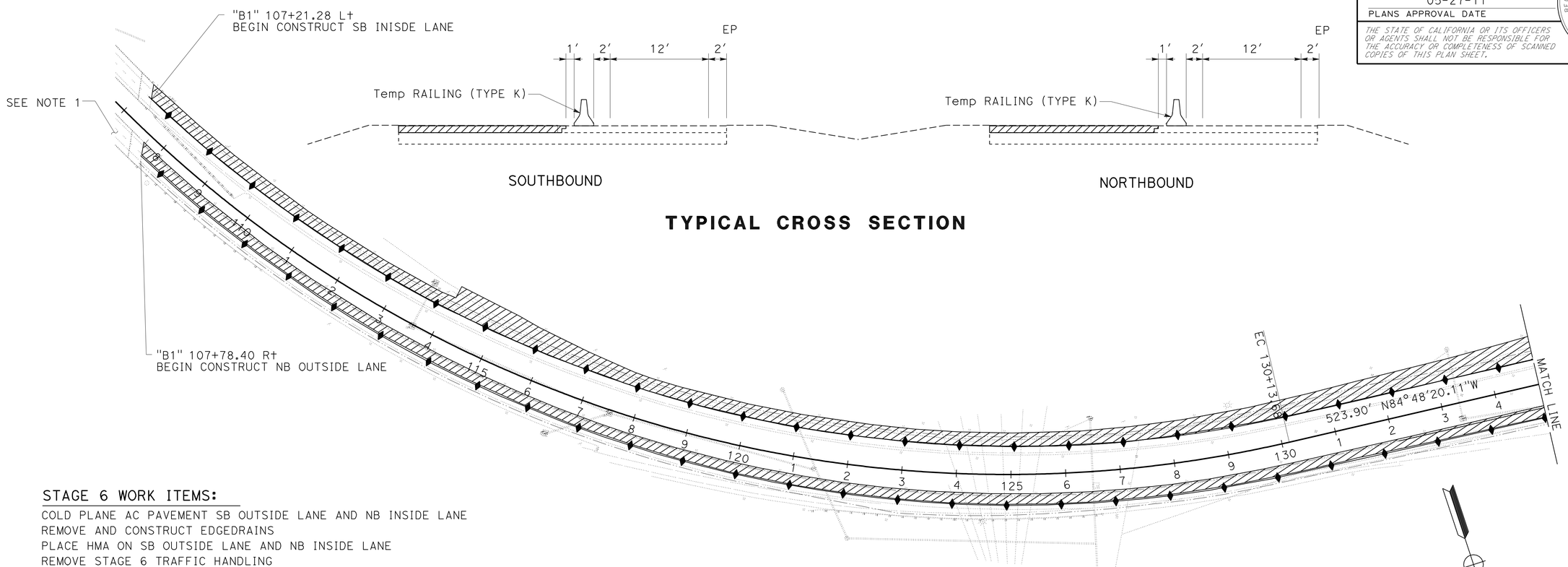

TYPICAL CROSS SECTION

STAGE 6 WORK ITEMS:

COLD PLANE AC PAVEMENT SB OUTSIDE LANE AND NB INSIDE LANE
REMOVE AND CONSTRUCT EDGEDRAINS
PLACE HMA ON SB OUTSIDE LANE AND NB INSIDE LANE
REMOVE STAGE 6 TRAFFIC HANDLING
CONSTRUCT FINAL OVERLAY UNDER TEMPORARY CLOSURES
PLACE FINAL STRIPING AND PAVEMENT MARKERS
CONSTRUCT ITS ELEMENTS

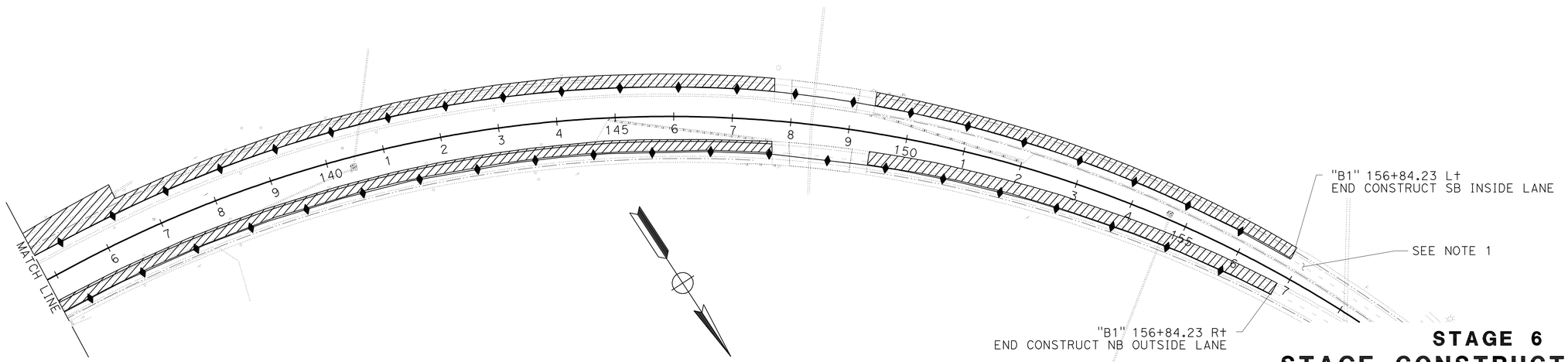

THIS PLAN ACCURATE FOR STAGE CONSTRUCITON AND TRAFFIC HANDLING WORK ONLY

STAGE 6
STAGE CONSTRUCTION AND TRAFFIC HANDLING PLANS
NO SCALE **SC-25**

REVISED BY	DATE REVISED

CALCULATED-DESIGNED BY	CHECKED BY
APOLINARIO VIVIT	LORI EWENS

FUNCTIONAL SUPERVISOR
APOLINARIO VIVIT

STATE OF CALIFORNIA - DEPARTMENT OF TRANSPORTATION
Caltrans
DESIGN

P:\proj1\02\3E750_plans\pse\23e750ma025.dgn

LAST REVISION 05-27-11
DATE PLOTTED => 01-JUN-2011
TIME PLOTTED => 09:58

Dist	COUNTY	ROUTE	POST MILES TOTAL PROJECT	SHEET No.	TOTAL SHEETS
02	Sis	5	R19/R25.3	78	149

REGISTERED CIVIL ENGINEER 05-27-11 DATE

05-27-11
PLANS APPROVAL DATE

REGISTERED PROFESSIONAL ENGINEER
APOLINARIO W. VIVIT
No. C66046
Exp. 06-30-12
CIVIL
STATE OF CALIFORNIA

THE STATE OF CALIFORNIA OR ITS OFFICERS OR AGENTS SHALL NOT BE RESPONSIBLE FOR THE ACCURACY OR COMPLETENESS OF SCANNED COPIES OF THIS PLAN SHEET.

NOTES:

1. TEMPORARY CRASH CUSHION (ALTERNATIVE-IN-LINE)TO BE USED DURING STAGE 2 AND STAGE 4 DETOURS TO PROTECT WILDLIFE OPENING BARRIER FLARES.
2. TEMPORARY PAVEMENT CONFORM TO BE USED WHEN CONFORMING TO EXIST PAVEMENT ELEVATIONS BETWEEN STAGES ONLY.
3. FOR DURATIONS LESS THAN 30 DAYS, USE 160:1 TAPER.
4. FOR DURATIONS LESS THAN 30 DAYS, CPACP NOT REQUIRED.

ABBREVIATIONS:

CPACP COLD PLANE AC PAVEMENT

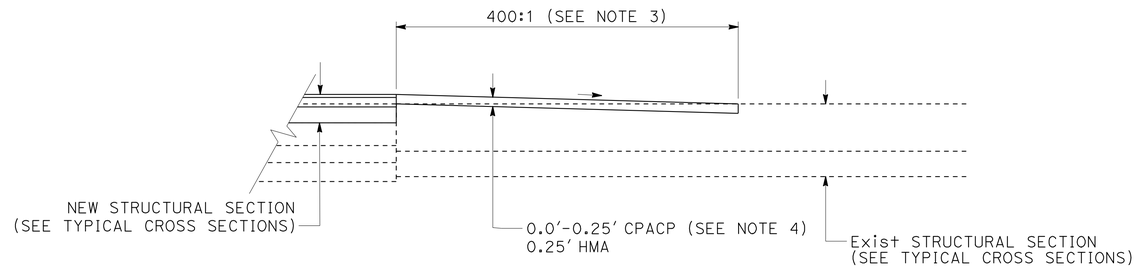

TEMPORARY PAVEMENT CONFORM

ALL STAGES

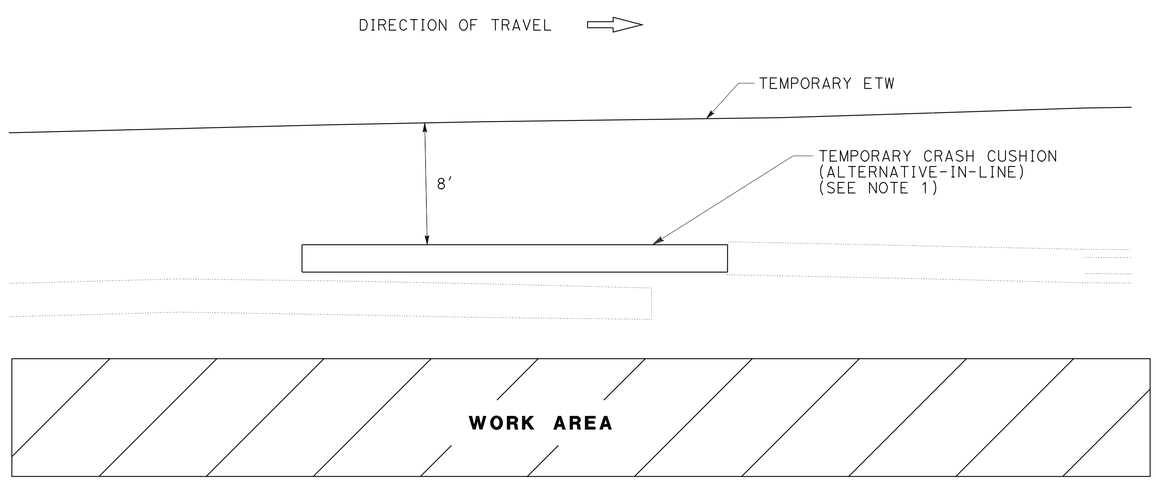

WILDLIFE OPENING PROTECTION

Sta "B1" 220+50 NB/SB
Sta "B1" 238+50 NB/SB
Sta "B1" 264+00 NB/SB

STAGE CONSTRUCTION AND TRAFFIC HANDLING DETAILS

NO SCALE

SCD-1

THIS PLAN ACCURATE FOR STAGE CONSTRUCTION AND TRAFFIC HANDLING WORK ONLY

REVISED BY | DATE REVISED
APOLINARIO VIVIT | LORI EWENS
CALCULATED-DESIGNED BY | CHECKED BY
FUNCTIONAL SUPERVISOR: APOLINARIO VIVIT

STATE OF CALIFORNIA - DEPARTMENT OF TRANSPORTATION
Caltrans DESIGN

P:\proj1\02\3E750_plans\pse\23e750mb001.dgn

LAST REVISION 05-27-11 | DATE PLOTTED => 18-AUG-2011 | TIME PLOTTED => 14:43

Dist	COUNTY	ROUTE	POST MILES TOTAL PROJECT	SHEET No.	TOTAL SHEETS
02	Sis	5	R19/R25.3	79	149

REGISTERED CIVIL ENGINEER 05-27-11 DATE

05-27-11
PLANS APPROVAL DATE

REGISTERED PROFESSIONAL ENGINEER
APOLINARIO W. VIVIT
No. C66046
Exp. 06-30-12
CIVIL
STATE OF CALIFORNIA

THE STATE OF CALIFORNIA OR ITS OFFICERS OR AGENTS SHALL NOT BE RESPONSIBLE FOR THE ACCURACY OR COMPLETENESS OF SCANNED COPIES OF THIS PLAN SHEET.

NOTE:

1. (N) - NOT A SEPARATE PAY ITEM, FOR INFORMATION ONLY

CONSTRUCTION AREA SIGNS (STATIONARY MOUNTED)

CODE	PANEL SIZE (In)	SIGN MESSAGE	NUMBER AND SIZE OF POST	No. OF SIGNS
W4-18 (CA)	48 x 48	AS SHOWN	1-4" x 6"	8
W20-5 (R+)	48 x 48	RIGHT LANE CLOSED AHEAD	1-4" x 6"	12
W4-2 (R+)	48 x 48	RIGHT LANE CLOSED AHEAD	1-4" x 6"	12
G84-3(CA)	48 x 60	EXIT 751	1-4" x 6"	1

NOTE: ADDITIONAL CONSTRUCTION AREA SIGNS SHOWN ELSEWHERE

STAGE CONSTRUCTION QUANTITIES SUMMARY

SHEET	STAGE	REMOVE TRAFFIC STRIPE	REMOVE YELLOW THERMOPLASTIC TRAFFIC STRIPE (HAZARDOUS WASTE)	TEMPORARY CRASH CUSHION MODULE	TEMPORARY CRASH CUSHION (ALTERINATIVE-IN-LINE)	TEMPORARY TRAFFIC STRIPE (PAINT)	TEMPORARY TRAFFIC STRIPE (TAPE)	TEMPORARY PAVEMENT MARKING (TAPE)	CHANNELIZER (SURFACE MOUNTED)	TEMPORARY RAILING (TYPE K)	(N) FLASHING ARROW SIGN	COMMENTS
		LF	LF	EA	EA	LF	LF	SQFT	EA	LF	EA	
SC-2 TO SC-7	1	24,700	12,500	14		123,330	6000	252	52	12,500	2	
SC-8 TO SC-12	2	18,700	9600	14	3	96,000		252	52	14,000	2	IN-LINE CRASH CUSHIONS FOR WILDLIFE OPENING PROTECTION
SC-13 TO SC-18	3			14		123,330	2000	252	62	12,400	2	
SC-19 TO SC-23	4			14	3	96,000		252	52	13,740	2	IN-LINE CRASH CUSHIONS FOR WILDLIFE OPENING PROTECTION
SC-24	5	8340	4170	28		9460	4000	252	52	10,320	2	
SC-25	6			28		10,020	4000	252	52	10,320	2	
TOTAL		51,740	26,270	112	6	458,140	16,000	1512	322	73,240	12	

STAGE CONSTRUCTION AND TRAFFIC HANDLING QUANTITIES

SCQ-1

REVISED BY | DATE REVISED

APOLINARIO VIVIT | LORI EWENS

CALCULATED-DESIGNED BY | CHECKED BY

FUNCTIONAL SUPERVISOR: APOLINARIO VIVIT

STATE OF CALIFORNIA - DEPARTMENT OF TRANSPORTATION
Caltrans® DESIGN

P:\proj1\02\3E750_plans\pse\23e750mc001.dgn

LAST REVISION 05-27-11 | DATE PLOTTED => 01-JUN-2011 | TIME PLOTTED => 09:59

Dist	COUNTY	ROUTE	POST MILES TOTAL PROJECT	SHEET No.	TOTAL SHEETS
02	Sis	5	R19/R25.3	80	149

REGISTERED CIVIL ENGINEER 05-27-11 DATE

05-27-11
PLANS APPROVAL DATE

REGISTERED PROFESSIONAL ENGINEER
APOLINARIO W. VIVIT
No. C66046
Exp. 06-30-12
CIVIL
STATE OF CALIFORNIA

THE STATE OF CALIFORNIA OR ITS OFFICERS OR AGENTS SHALL NOT BE RESPONSIBLE FOR THE ACCURACY OR COMPLETENESS OF SCANNED COPIES OF THIS PLAN SHEET.

NOTES:

1. MEDIAN LANE CLOSURES SHALL CONFORM TO THE DETAILS FOR OUTSIDE LANE CLOSURES EXCEPT THAT C20 (CA) (L+) SIGNS SHALL BE USED.
2. SEE STANDARD PLANS FOR ADDITIONAL INFORMATION
3. MEDIAN SIGNS MAY NEED TO BE BARRIER MOUNTED,

LEGEND:

- FLASHING ARROW SIGN (FAS)
- FAS SUPPORT OR TRAILER
- STRIPE CHANGE LOCATION
- DIRECTION OF TRAVEL
- SIGN (STATIONARY MOUNTED)
- CHANNELIZER (SURFACE MOUNTED)

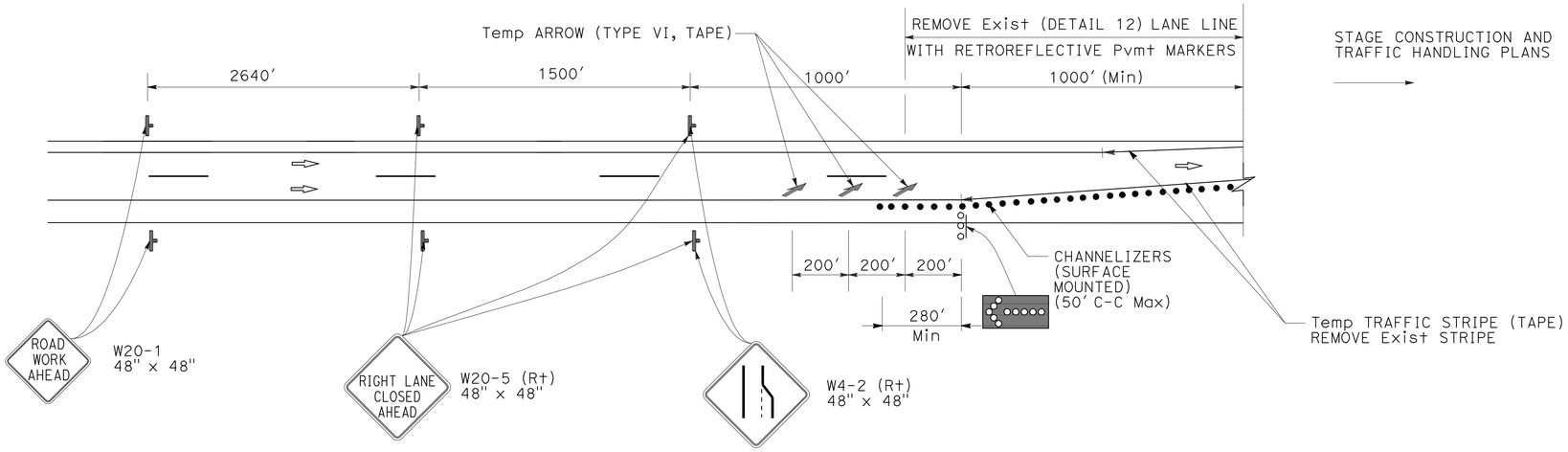

LANE CLOSURE PLAN

TRAFFIC HANDLING DETAILS

NO SCALE

THD-1

THIS PLAN ACCURATE FOR STAGE CONSTRUCTION AND TRAFFIC HANDLING WORK ONLY

REVISED BY | DATE REVISED
APOLINARIO VIVIT | LORI EWENS
CALCULATED-DESIGNED BY | CHECKED BY
FUNCTIONAL SUPERVISOR: APOLINARIO VIVIT

STATE OF CALIFORNIA - DEPARTMENT OF TRANSPORTATION
Caltrans
DESIGN

P:\proj1\02\3E750_plans\pse\23e750me001.dgn

LAST REVISION 05-27-11 | DATE PLOTTED => 01-JUN-2011 | TIME PLOTTED => 09:59

Dist	COUNTY	ROUTE	POST MILES TOTAL PROJECT	SHEET No.	TOTAL SHEETS
02	Sis	5	R19/R25.3	81	149

REGISTERED CIVIL ENGINEER DATE 05-27-11

05-27-11
PLANS APPROVAL DATE

REGISTERED PROFESSIONAL ENGINEER
APOLINARIO W. VIVIT
No. C66046
Exp. 06-30-12
CIVIL
STATE OF CALIFORNIA

THE STATE OF CALIFORNIA OR ITS OFFICERS OR AGENTS SHALL NOT BE RESPONSIBLE FOR THE ACCURACY OR COMPLETENESS OF SCANNED COPIES OF THIS PLAN SHEET.

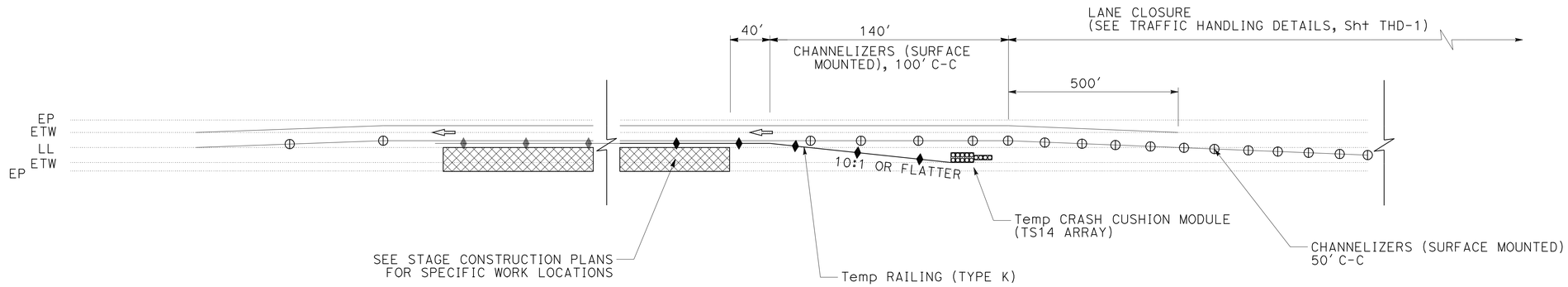

PLAN

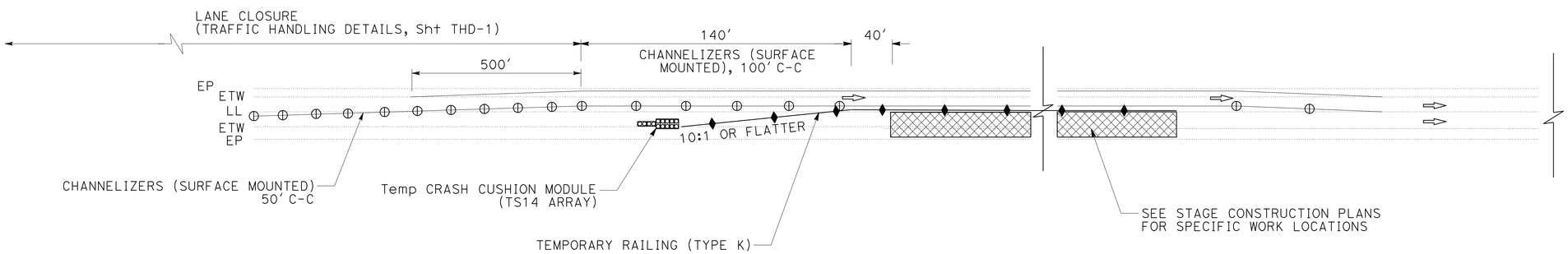

PLAN

STAGE 5
TRAFFIC HANDLING DETAILS
NO SCALE

THD-2

THIS PLAN ACCURATE FOR STAGE CONSTRUCTION AND TRAFFIC HANDLING WORK ONLY

REVISED BY	DATE REVISED

APOLINARIO VIVIT — LORI EWENS

CALCULATED-DESIGNED BY — CHECKED BY

FUNCTIONAL SUPERVISOR: APOLINARIO VIVIT

STATE OF CALIFORNIA - DEPARTMENT OF TRANSPORTATION
Caltrans
DESIGN

P:\proj1\02\3E750_plans\pse\23e750me002.dgn

LAST REVISION 05-27-11 | DATE PLOTTED => 01-JUN-2011 | TIME PLOTTED => 09:59

Dist	COUNTY	ROUTE	POST MILES TOTAL PROJECT	SHEET No.	TOTAL SHEETS
02	Sis	5	R19/R25.3	82	149

REGISTERED CIVIL ENGINEER 05-27-11 DATE

05-27-11
PLANS APPROVAL DATE

REGISTERED PROFESSIONAL ENGINEER
APOLINARIO W. VIVIT
No. C66046
Exp. 06-30-12
CIVIL
STATE OF CALIFORNIA

THE STATE OF CALIFORNIA OR ITS OFFICERS OR AGENTS SHALL NOT BE RESPONSIBLE FOR THE ACCURACY OR COMPLETENESS OF SCANNED COPIES OF THIS PLAN SHEET.

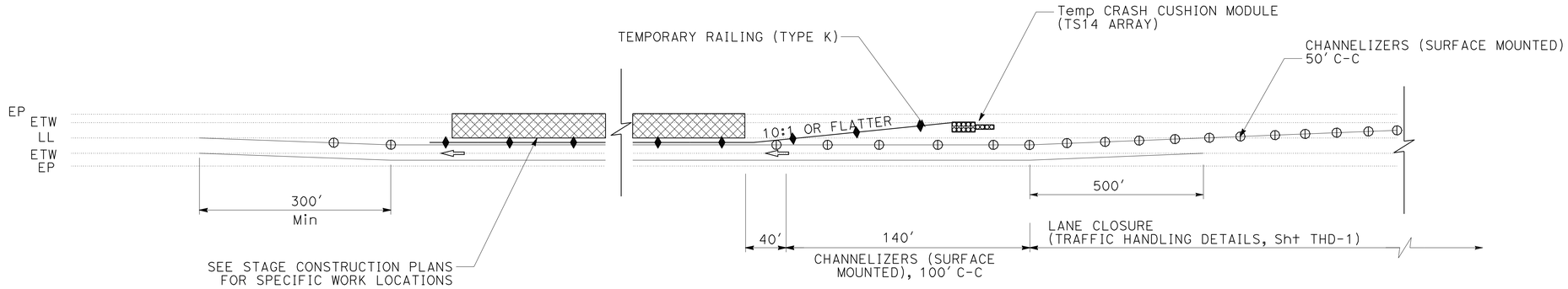

SOUTHBOUND PLAN

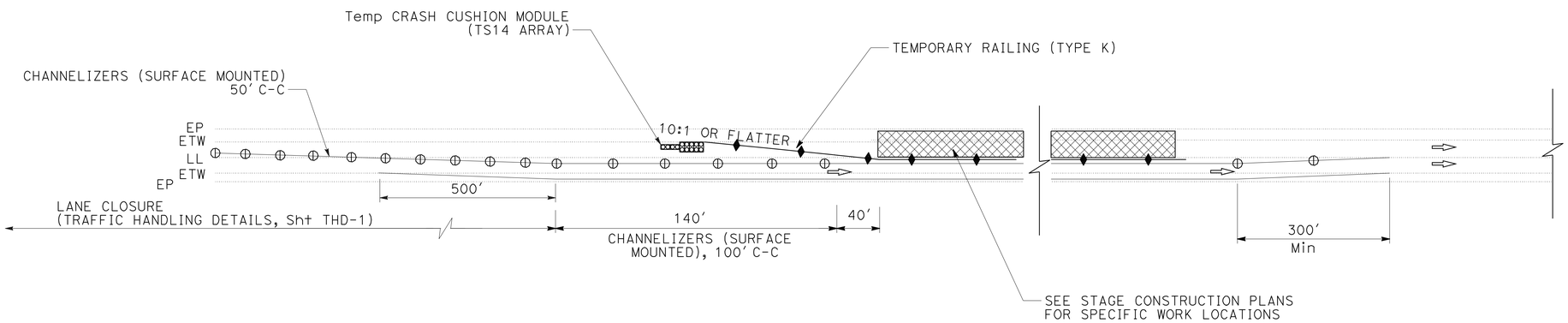

NORTHBOUND PLAN

STAGE 6
TRAFFIC HANDLING DETAILS
NO SCALE

THD-3

THIS PLAN ACCURATE FOR STAGE CONSTRUCTION AND TRAFFIC HANDLING WORK ONLY

REVISED BY | DATE REVISED
APOLINARIO VIVIT | LORI EWENS
CALCULATED-DESIGNED BY | CHECKED BY
FUNCTIONAL SUPERVISOR | APOLINARIO VIVIT
STATE OF CALIFORNIA - DEPARTMENT OF TRANSPORTATION
Caltrans
DESIGN

P:\proj1\02\3E750_plans\pse\23e750me003.dgn

LAST REVISION 05-27-11 | DATE PLOTTED => 01-JUN-2011 | TIME PLOTTED => 09:59

Dist	COUNTY	ROUTE	POST MILES TOTAL PROJECT	SHEET No.	TOTAL SHEETS
02	Sis	5	R19/R25.3	83	149

REGISTERED CIVIL ENGINEER DATE 05-27-11

05-27-11
PLANS APPROVAL DATE

REGISTERED PROFESSIONAL ENGINEER
APOLINARIO W. VIVIT
No. C66046
Exp. 06-30-12
CIVIL
STATE OF CALIFORNIA

THE STATE OF CALIFORNIA OR ITS OFFICERS OR AGENTS SHALL NOT BE RESPONSIBLE FOR THE ACCURACY OR COMPLETENESS OF SCANNED COPIES OF THIS PLAN SHEET.

NOTES:

1. LEFT SIDE TRAFFIC CONTROL SHOWN.
   MIRROR FOR RIGHT SIDE OF ROADWAY.
2. NORTHBOUND PLAN SHOWN, MIRROR FOR SOUTHBOUND.
3. FOR TRAFFIC CONTROL WIDTHS SEE STAGE CONSTRUCTION AND TRAFFIC HANDLING PLANS (SHEET SC-7 FOR STAGE 1 AND SHEET SC-17 FOR STAGE 3).

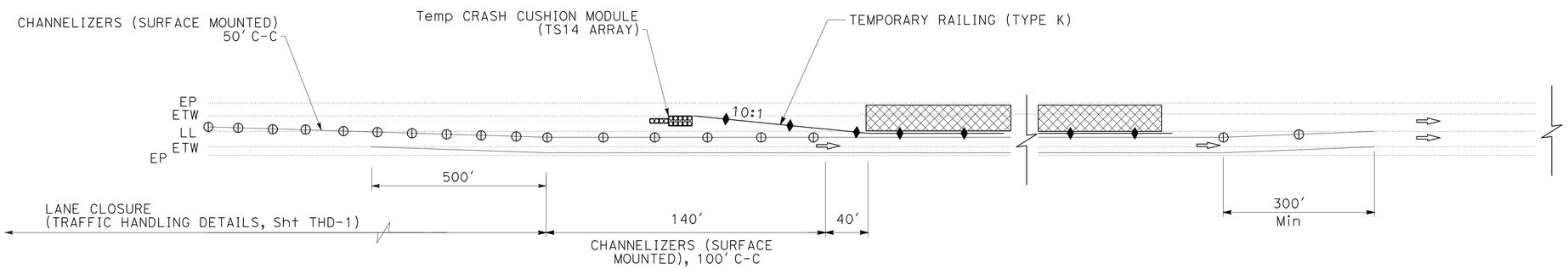

PLAN

STAGE 1 - SOUTHBOUND
STAGE 3 - NORTHBOUND

STAGE 1, 3
TRAFFIC HANDLING DETAILS
NO SCALE

THD-4

THIS PLAN ACCURATE FOR STAGE CONSTRUCTION AND TRAFFIC HANDLING WORK ONLY

REVISED BY | DATE REVISED
APOLINARIO VIVIT | LORI EWENS
CALCULATED-DESIGNED BY | CHECKED BY
FUNCTIONAL SUPERVISOR: APOLINARIO VIVIT

STATE OF CALIFORNIA - DEPARTMENT OF TRANSPORTATION
Caltrans
DESIGN

P:\proj1\02\3E750_plans\pse\23e750me004.dgn

LAST REVISION 05-27-11 | DATE PLOTTED => 01-JUN-2011 | TIME PLOTTED => 09:59

Dist	COUNTY	ROUTE	POST MILES TOTAL PROJECT	SHEET No.	TOTAL SHEETS
02	Sis	5	R19/R25.3	84	149

REGISTERED CIVIL ENGINEER 05-27-11 DATE

05-27-11
PLANS APPROVAL DATE

REGISTERED PROFESSIONAL ENGINEER APOLINARIO W. VIVIT No. C66046 Exp. 06-30-12 CIVIL STATE OF CALIFORNIA

THE STATE OF CALIFORNIA OR ITS OFFICERS OR AGENTS SHALL NOT BE RESPONSIBLE FOR THE ACCURACY OR COMPLETENESS OF SCANNED COPIES OF THIS PLAN SHEET.

NOTES:

1. PRE-NOTIFICATION PCMS: PLACE NEAR RAMP AND ACTIVATE APPROXIMATELY 12 HOURS PRIOR TO RAMP CLOSURE.

EXIT WILL BE CLOSED	TODAY (or TONIGHT) XX:XXPM - XX:XXAM (OR DATES)
FRAME 1	FRAME 2

2. RAMP CLOSED PCMS: MOVE PRE-NOTIFICATION PCMS APPROXIMATELY 1000 FEET BEFORE RAMP AND ACTIVATE DURING RAMP CLOSURE.

EXIT XXX CLOSED	OR	EXIT XXX CLOSED XXX MILES AHEAD	FOLLOW DETOUR	OR	EXIT XXX TRAFFIC USE EXIT YYY DETOUR
FRAME 1		FRAME 1	FRAME 2		FRAME 2

3. PLACE 7 DAYS PRIOR TO RAMP CLOSURE.
4. IF AVAILABLE, EXISTING ROUTE SHIELDS AND DIRECTIONS MAY BE USED IN PLACE OF SIGNS SHOWN.
5. RAMP CLOSED PCMS: PLACE BEFORE OPEN ON RAMP AND ACTIVATE DURING RAMP CLOSURE.

NB (OR SB) I-5 ONRAMP CLOSED	FOLLOW DETOUR
FRAME 1	FRAME 2

6. EXIT NUMBER SHOWN AS FOLLOWS.

EXIT NAME	EXIT NUMBER
CENTRAL WEED/HWY 97	747
N. WEED BLVD	748
EDGEWOOD/GAZELLE	751
WEED AIRPORT RD	753

7. EXACT SIGN LOCATION TO BE DETERMINED BY THE ENGINEER.

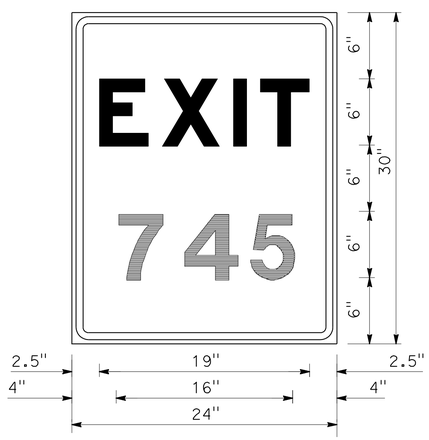

1.5" Radius, 0.6" Border, 0.4" Indent, Black on Orange;
[EXIT] E Mod; [773] E Mod;

EXIT NUMBER SIGN (SP1) DETAIL
(SEE NOTE 6)

8. EXISTING UTILITY FACILITIES HAVE NOT BEEN POSITIVELY LOCATED.

CONSTRUCTION AREA SIGNS (PORTABLE)

CODE	PANEL SIZE	SIGN MESSAGE
G27-2(5)(CA)	24" x 24"	ROUTE SHIELD (5)
M3-1	24" x 12"	DIRECTION (NORTH)
M3-3	24" x 12"	DIRECTION (SOUTH)
M4-8A	24" x 18"	END DETOUR
M4-10L	48" x 18"	DETOUR (Lt ARROW)
M4-10R	48" x 18"	DETOUR (Rt ARROW)
SC3 (CA)	48" x 18"	DETOUR WITH UP ARROW
SC6-4 (CA)	48" x 60"	RAMP CLOSED - DATE TIME
SC6-3 (CA)	48" x 48"	RAMP CLOSED - DATE TIME
SP1	24" x 30"	EXIT NUMBER (SEE NOTE 7)

LEGEND

- PORTABLE CHANGEABLE MESSAGE SIGN
- (X) NOTE NUMBER
- SIGN (1 POST)
- SIGN (2 POST)

ABBREVIATIONS

PCMS PORTABLE CHANGEABLE MESSAGE SIGN

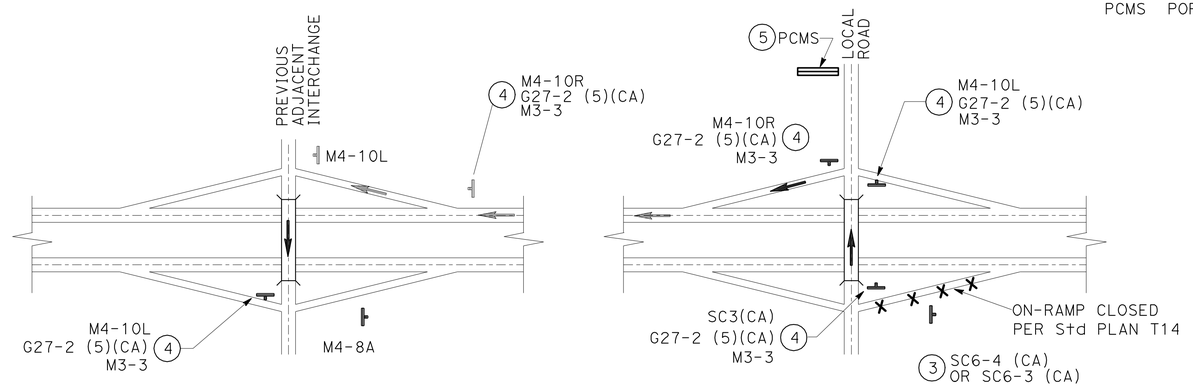

TYPICAL SB ON RAMP DETOUR SIGNING

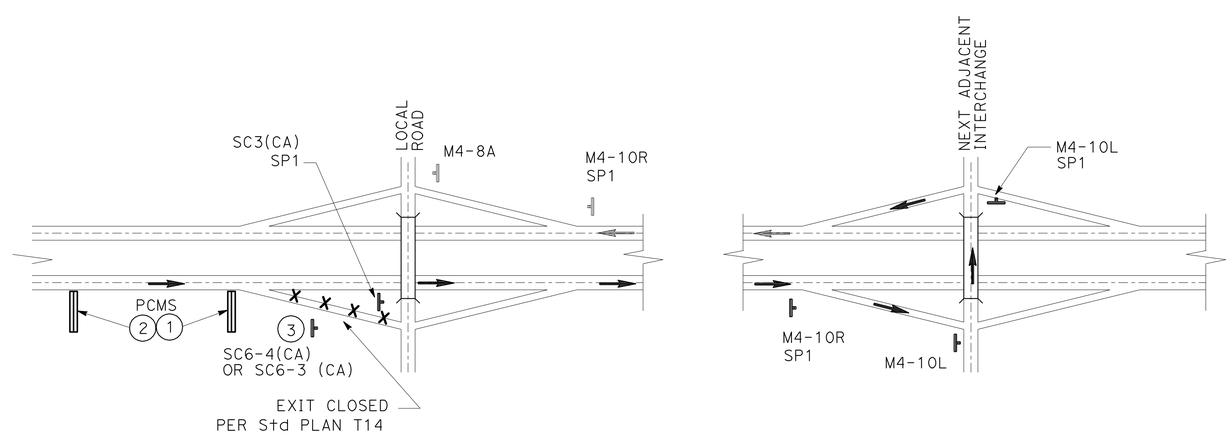

TYPICAL SB EXIT RAMP DETOUR SIGNING

THIS PLAN ACCURATE FOR DETOUR WORK ONLY

DETOUR PLAN
NO SCALE
DE-1

STATE OF CALIFORNIA - DEPARTMENT OF TRANSPORTATION
Caltrans® DESIGN
FUNCTIONAL SUPERVISOR: APOLINARIO VIVIT
CALCULATED-DESIGNED BY: ROD ESTES
CHECKED BY: APOLINARIO VIVIT
REVISED BY / DATE REVISED

P:\proj\02\3E750_plans\pse\23e750mg001.dgn

LAST REVISION 05-27-11 | DATE PLOTTED => 01-JUN-2011 | TIME PLOTTED => 09:59

BORDER LAST REVISED 7/2/2010 | USERNAME => s115152 | DGN FILE => 23e750mg001.dgn | RELATIVE BORDER SCALE IS IN INCHES 0 1 2 3 | UNIT 0317 | PROJECT NUMBER & PHASE 02000201611

Dist	COUNTY	ROUTE	POST MILES TOTAL PROJECT	SHEET No.	TOTAL SHEETS
02	Sis	5	R19/R25.3	85	149

REGISTERED CIVIL ENGINEER DATE 05-27-11

PLANS APPROVAL DATE 05-27-11

REGISTERED PROFESSIONAL ENGINEER APOLINARIO W. VIVIT No. C66046 Exp. 06-30-12 CIVIL STATE OF CALIFORNIA

THE STATE OF CALIFORNIA OR ITS OFFICERS OR AGENTS SHALL NOT BE RESPONSIBLE FOR THE ACCURACY OR COMPLETENESS OF SCANNED COPIES OF THIS PLAN SHEET.

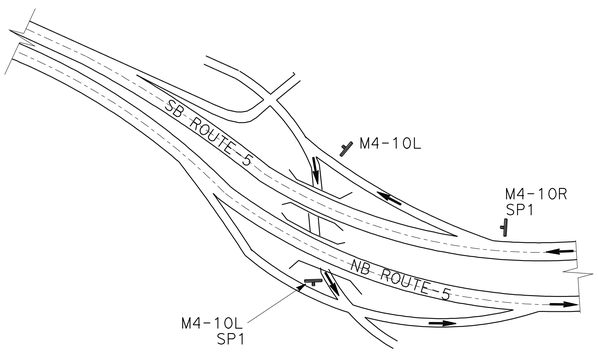

CENTRAL WEED/Hwy 97 EXIT 747

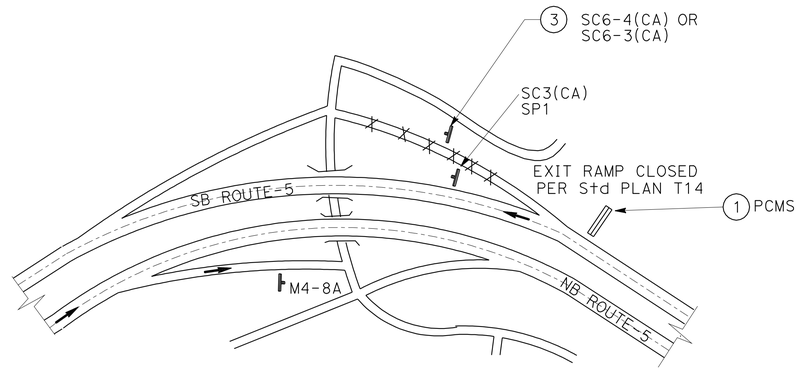

N WEED Blvd/EXIT 748

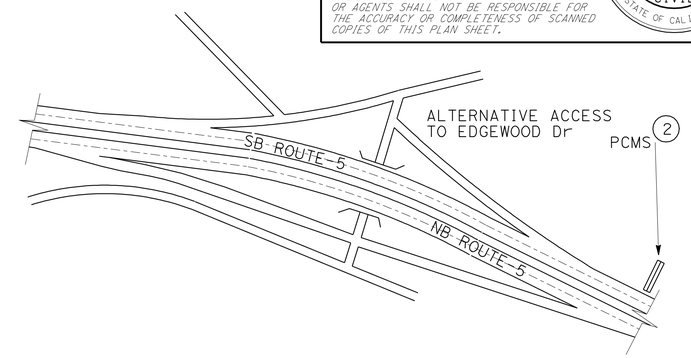

EDGEWOOD Rd/EXIT 751

CLOSURE OF SB Rte 5 EXIT RAMP TO N WEED Blvd (EXIT 748)

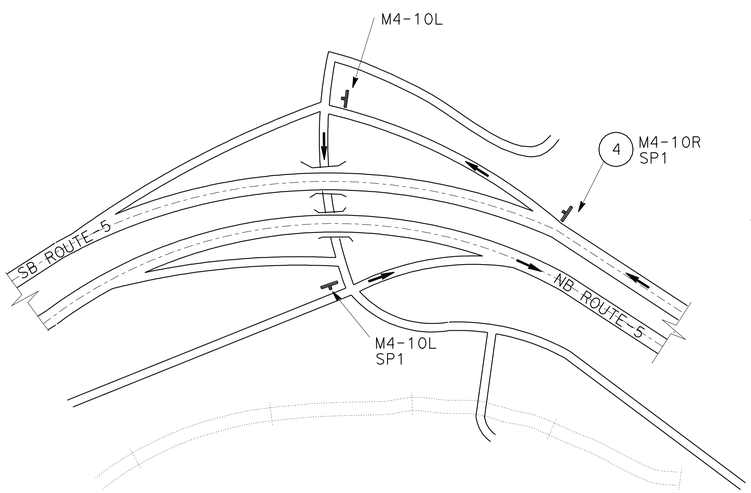

N WEED Blvd/EXIT 748

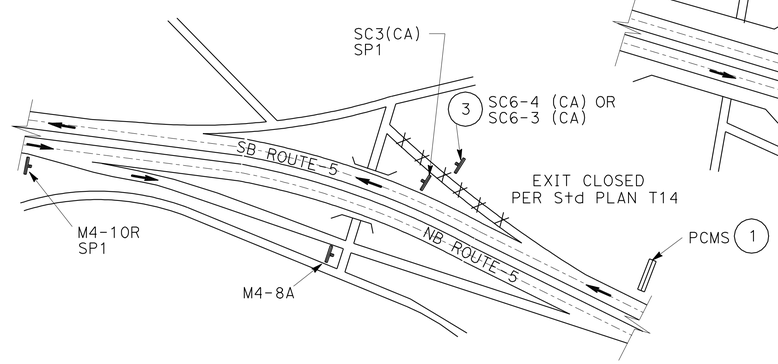

EDGEWOOD Rd/EXIT 751

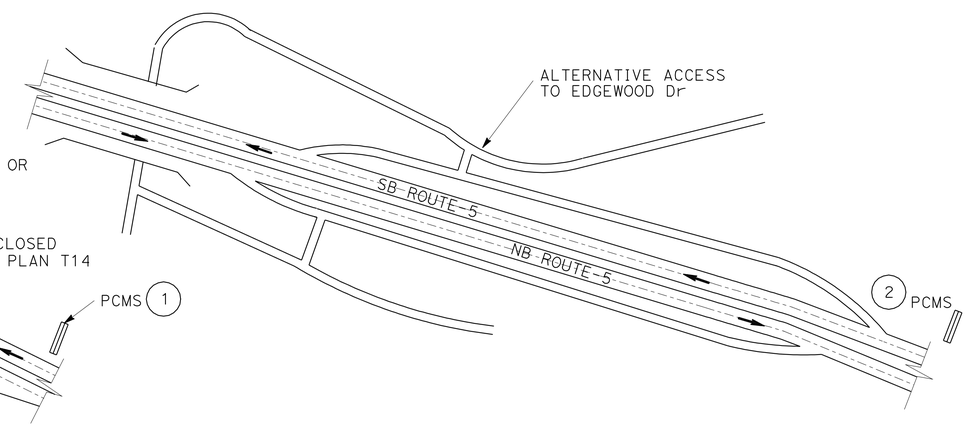

WEED AIRPORT/EXIT 753

CLOSURE OF SB Rte 5 EXIT RAMP TO EDGEWOOD/GAZELLE (EXIT 751)

DETOUR PLAN

NO SCALE

DE-2

THIS PLAN ACCURATE FOR DETOUR WORK ONLY

REVISED BY	DATE REVISED

CALCULATED-DESIGNED BY: ROD ESTES
CHECKED BY: APOLINARIO VIVIT
FUNCTIONAL SUPERVISOR: APOLINARIO VIVIT

STATE OF CALIFORNIA - DEPARTMENT OF TRANSPORTATION
Caltrans
DESIGN

P:\proj1\02\3E750_plans\pse\23e750mg002.dgn

LAST REVISION 05-27-11 | DATE PLOTTED => 01-JUN-2011 | TIME PLOTTED => 09:59

Dist	COUNTY	ROUTE	POST MILES TOTAL PROJECT	SHEET No.	TOTAL SHEETS
02	Sis	5	R19/R25.3	86	149

REGISTERED CIVIL ENGINEER DATE 05-27-11

PLANS APPROVAL DATE 05-27-11

REGISTERED PROFESSIONAL ENGINEER APOLINARIO W. VIVIT No. C66046 Exp. 06-30-12 CIVIL STATE OF CALIFORNIA

THE STATE OF CALIFORNIA OR ITS OFFICERS OR AGENTS SHALL NOT BE RESPONSIBLE FOR THE ACCURACY OR COMPLETENESS OF SCANNED COPIES OF THIS PLAN SHEET.

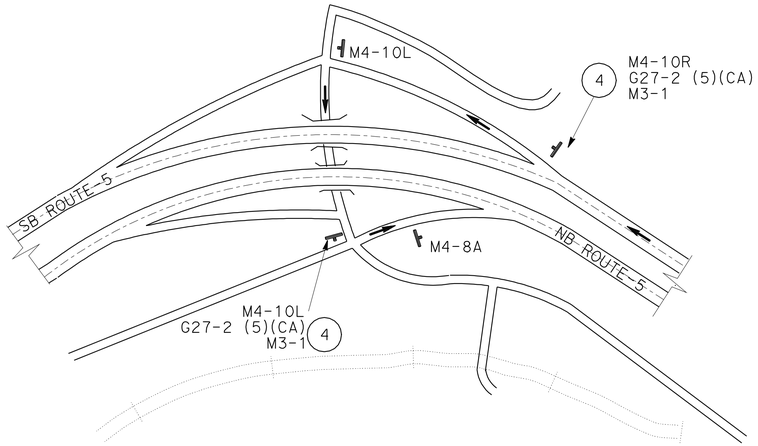

N WEED Blvd/EXIT 748

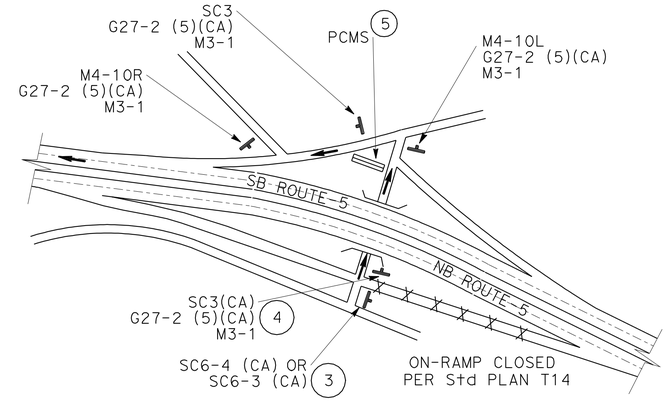

EDGEWOOD Rd/EXIT 751

CLOSURE OF NB Rte 5 ON-RAMP FROM EDGEWOOD Dr (EXIT 751)

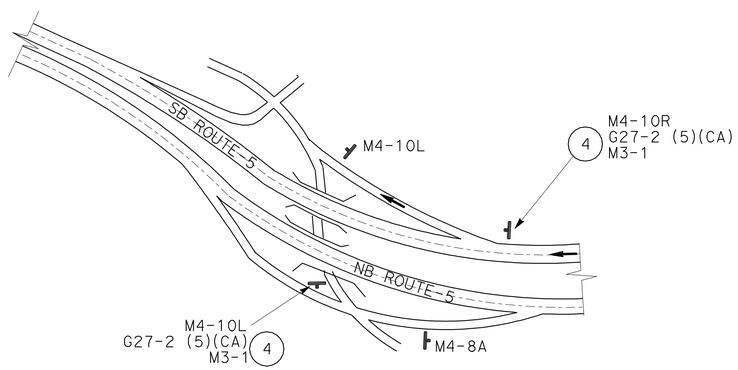

CENTRAL WEED/Hwy 97 EXIT 747

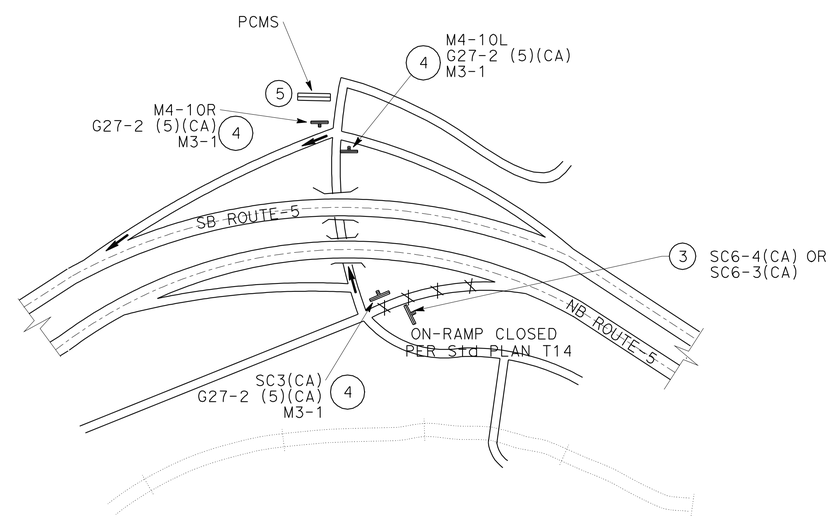

N WEED Blvd/EXIT 748

CLOSURE OF NB Rte 5 ON-RAMP FROM N WEED Blvd (EXIT 748)

THIS PLAN ACCURATE FOR DETOUR WORK ONLY

DETOUR PLAN

NO SCALE

DE-3

REVISED BY	DATE REVISED

CALCULATED-DESIGNED BY	ROD ESTES
CHECKED BY	APOLINARIO VIVIT
FUNCTIONAL SUPERVISOR	APOLINARIO VIVIT

STATE OF CALIFORNIA - DEPARTMENT OF TRANSPORTATION

Caltrans DESIGN

P:\proj1\02\3E750_plans\pse\23e750mg003.dgn

LAST REVISION 05-27-11 | DATE PLOTTED => 01-JUN-2011 | TIME PLOTTED => 09:59

Dist	COUNTY	ROUTE	POST MILES TOTAL PROJECT	SHEET No.	TOTAL SHEETS
02	Sis	5	R19/R25.3	87	149

REGISTERED CIVIL ENGINEER DATE 05-27-11

05-27-11
PLANS APPROVAL DATE

REGISTERED PROFESSIONAL ENGINEER
APOLINARIO W. VIVIT
No. C66046
Exp. 06-30-12
CIVIL
STATE OF CALIFORNIA

THE STATE OF CALIFORNIA OR ITS OFFICERS OR AGENTS SHALL NOT BE RESPONSIBLE FOR THE ACCURACY OR COMPLETENESS OF SCANNED COPIES OF THIS PLAN SHEET.

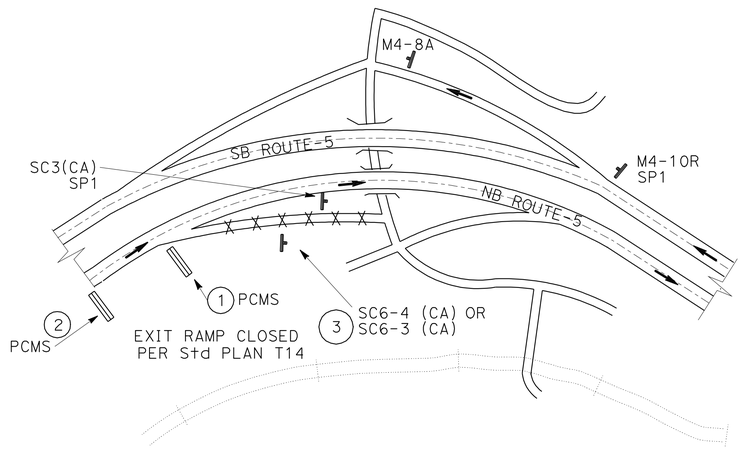

N WEED Blvd/EXIT 748

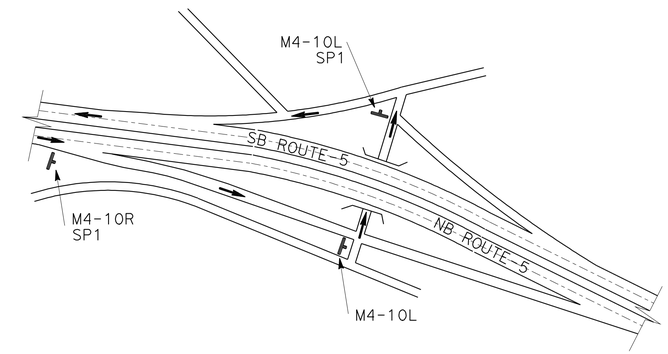

EDGEWOOD Rd/EXIT 751

CLOSURE OF NB EXIT 748 RAMP TO N WEED Blvd

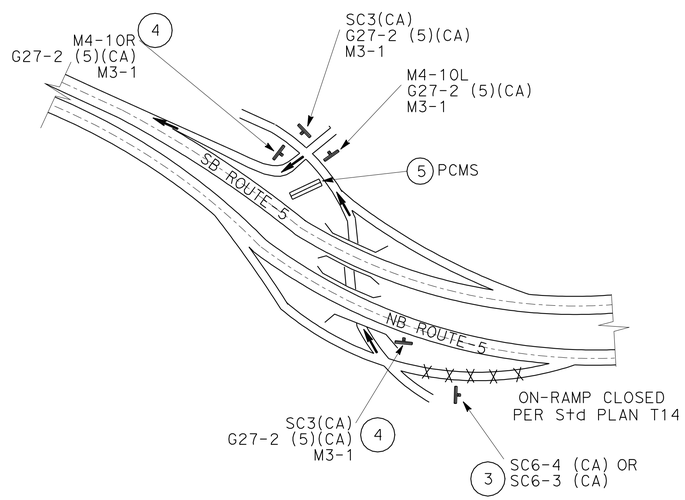

CENTRAL WEED/Hwy 97 EXIT 747

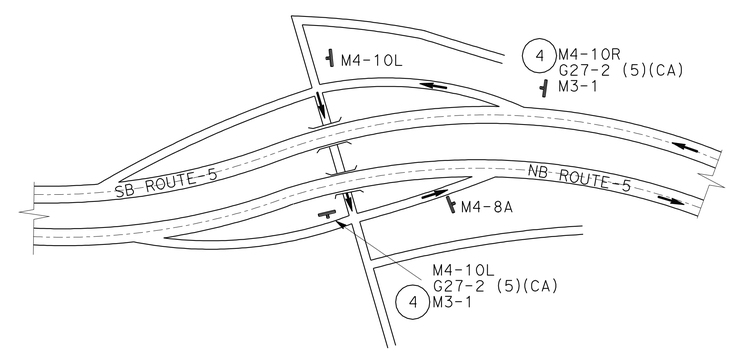

S WEED Blvd/EXIT 745

CLOSURE OF CENTRAL WEED (5/97 SEP) ON-RAMP TO NB Rte 5

THIS PLAN ACCURATE FOR DETOUR WORK ONLY

DETOUR PLAN

NO SCALE

DE-4

REVISED BY | DATE REVISED
ROD ESTES | APOLINARIO VIVIT
CALCULATED-DESIGNED BY | CHECKED BY
FUNCTIONAL SUPERVISOR
APOLINARIO VIVIT

STATE OF CALIFORNIA - DEPARTMENT OF TRANSPORTATION
Caltrans
DESIGN

P:\proj1\02\3E750_plans\pse\23e750mg004.dgn

LAST REVISION 05-27-11 | DATE PLOTTED => 01-JUN-2011 | TIME PLOTTED => 09:59

Dist	COUNTY	ROUTE	POST MILES TOTAL PROJECT	SHEET No.	TOTAL SHEETS
02	Sis	5	R19/R25.3	88	149

REGISTERED CIVIL ENGINEER DATE 05-27-11

05-27-11
PLANS APPROVAL DATE

REGISTERED PROFESSIONAL ENGINEER
APOLINARIO W. VIVIT
No. C66046
Exp. 06-30-12
CIVIL
STATE OF CALIFORNIA

THE STATE OF CALIFORNIA OR ITS OFFICERS OR AGENTS SHALL NOT BE RESPONSIBLE FOR THE ACCURACY OR COMPLETENESS OF SCANNED COPIES OF THIS PLAN SHEET.

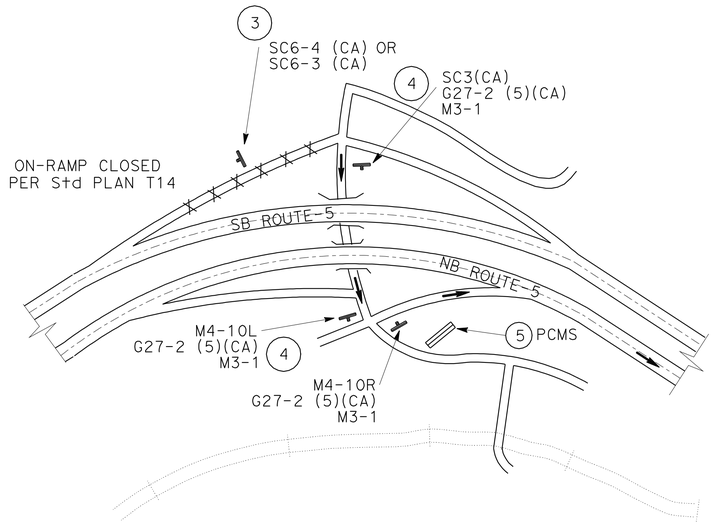

N WEED Blvd/EXIT 748

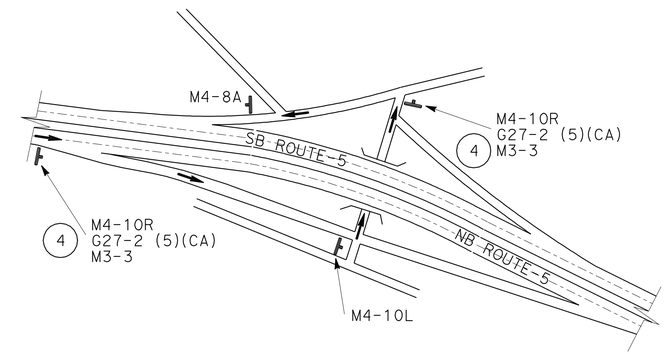

EDGEWOOD Rd/EXIT 751

CLOSURE OF SB ON-RAMP FROM N WEED Blvd

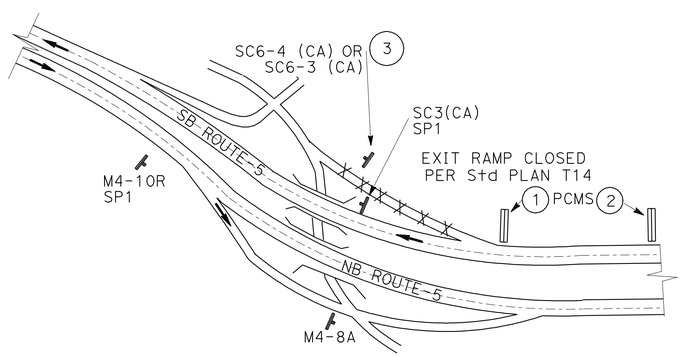

CENTRAL WEED/Hwy 97 EXIT 747

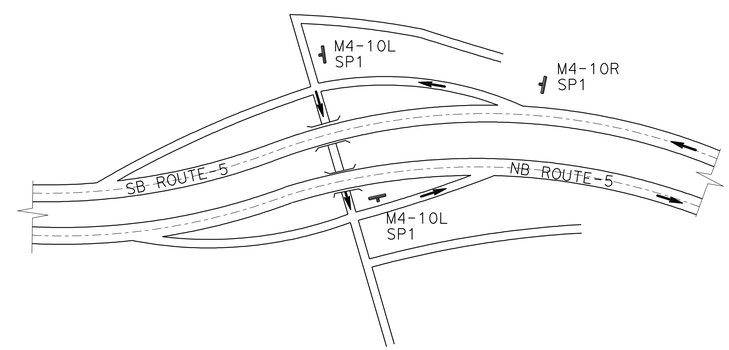

S WEED Blvd/EXIT 745

CLOSURE OF SB Rte 5 OFF-RAMP TO CENTRAL WEED (EXIT 747)

THIS PLAN ACCURATE FOR DETOUR WORK ONLY

DETOUR PLAN
NO SCALE

DE-5

REVISED BY	DATE REVISED

CALCULATED-DESIGNED BY: ROD ESTES
CHECKED BY: APOLINARIO VIVIT
FUNCTIONAL SUPERVISOR: APOLINARIO VIVIT

STATE OF CALIFORNIA - DEPARTMENT OF TRANSPORTATION
Caltrans
DESIGN

P:\proj1\02\3E750_plans\pse\23e750mg005.dgn

LAST REVISION 05-27-11 | DATE PLOTTED => 01-JUN-2011 | TIME PLOTTED => 10:00

Dist	COUNTY	ROUTE	POST MILES TOTAL PROJECT	SHEET No.	TOTAL SHEETS
02	Sis	5	R19/R25.3	89	149

REGISTERED CIVIL ENGINEER 05-27-11 DATE

05-27-11
PLANS APPROVAL DATE

REGISTERED PROFESSIONAL ENGINEER APOLINARIO W. VIVIT No. C66046 Exp. 06-30-12 CIVIL STATE OF CALIFORNIA

THE STATE OF CALIFORNIA OR ITS OFFICERS OR AGENTS SHALL NOT BE RESPONSIBLE FOR THE ACCURACY OR COMPLETENESS OF SCANNED COPIES OF THIS PLAN SHEET.

LEGEND

DIRECTION OF TRAFFIC

XX PAVEMENT DELINEATION STRIPE DETAIL No.

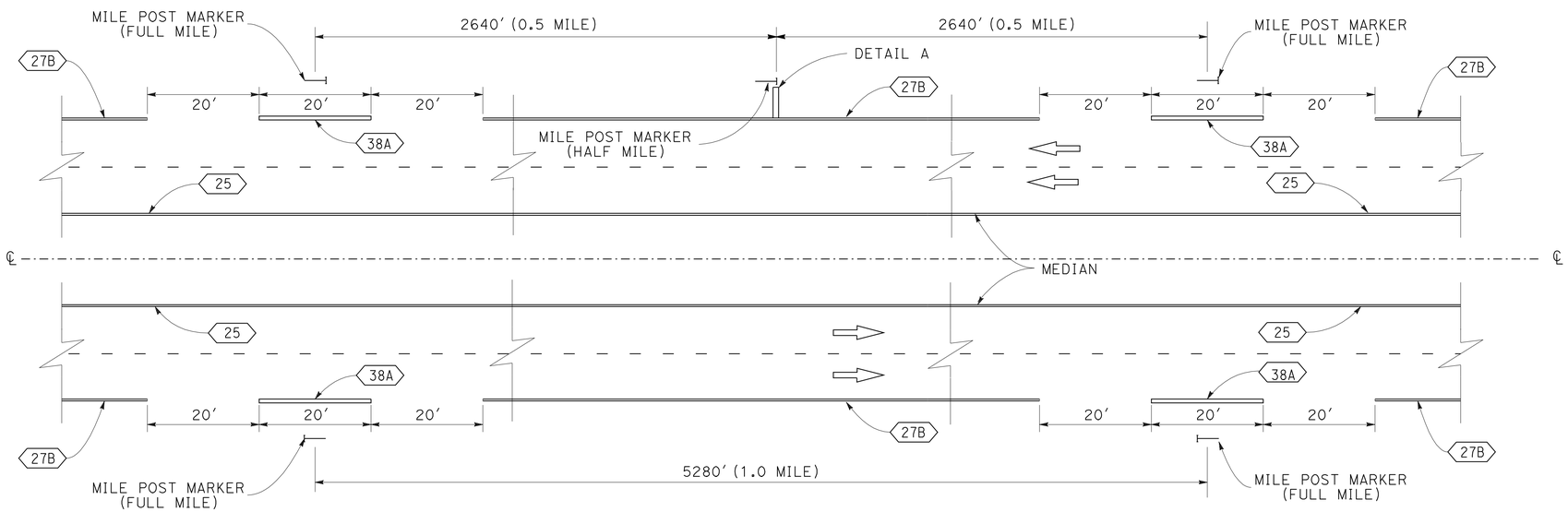

TYPICAL HALF MILE AND MILE POST STRIPE

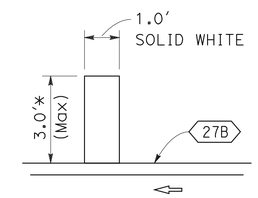

DETAIL "A"

* ACTUAL LENGTH MAY VARY DUE TO PAVEMENT WIDTH

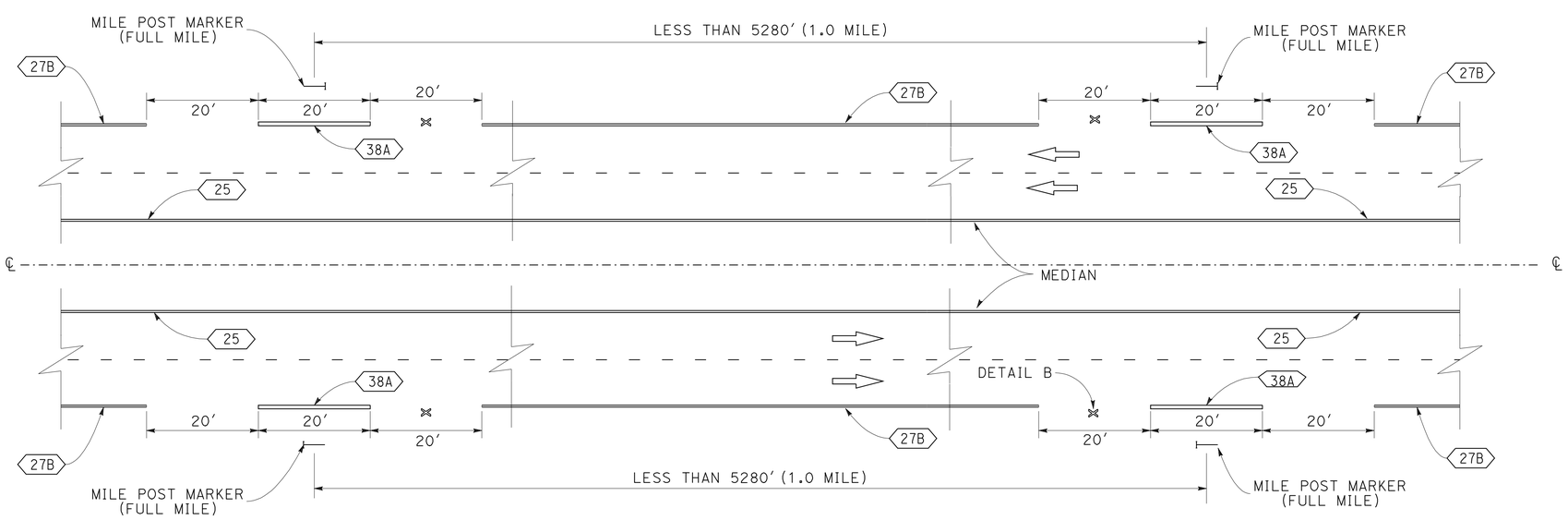

TYPICAL MILE POST STRIPE FOR EQUATIONS

(NO DETAIL "A" WITHIN AN EQUATION)

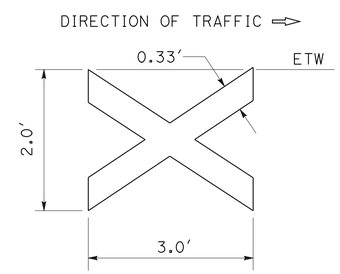

DETAIL "B"

0.33' SOLID WHITE

PAVEMENT DELINEATION DETAILS

NO SCALE

PDD-1

STATE OF CALIFORNIA - DEPARTMENT OF TRANSPORTATION
Caltrans
DESIGN

FUNCTIONAL SUPERVISOR: APOLINARIO VIVIT
CALCULATED-DESIGNED BY: APOLINARIO VIVIT
CHECKED BY: LORI EWENS
REVISED BY / DATE REVISED

P:\proj1\02\3E750_plans\pse\23e750nb001.dgn

LAST REVISION 05-27-11 | DATE PLOTTED => 01-JUN-2011 | TIME PLOTTED => 10:00

BORDER LAST REVISED 7/2/2010 | USERNAME => s115152 | DGN FILE => 23e750nb001.dgn | RELATIVE BORDER SCALE IS IN INCHES 0 1 2 3 | UNIT 0317 | PROJECT NUMBER & PHASE 02000201611

Dist	COUNTY	ROUTE	POST MILES TOTAL PROJECT	SHEET No.	TOTAL SHEETS
02	Sis	5	R19/R25.3	90	149

REGISTERED CIVIL ENGINEER DATE 05-27-11

05-27-11
PLANS APPROVAL DATE

REGISTERED PROFESSIONAL ENGINEER
APOLINARIO W. VIVIT
No. C66046
Exp. 06-30-12
CIVIL
STATE OF CALIFORNIA

THE STATE OF CALIFORNIA OR ITS OFFICERS OR AGENTS SHALL NOT BE RESPONSIBLE FOR THE ACCURACY OR COMPLETENESS OF SCANNED COPIES OF THIS PLAN SHEET.

LEGEND:

1-1 PAVEMENT DELINEATION STRIPE DETAIL No.

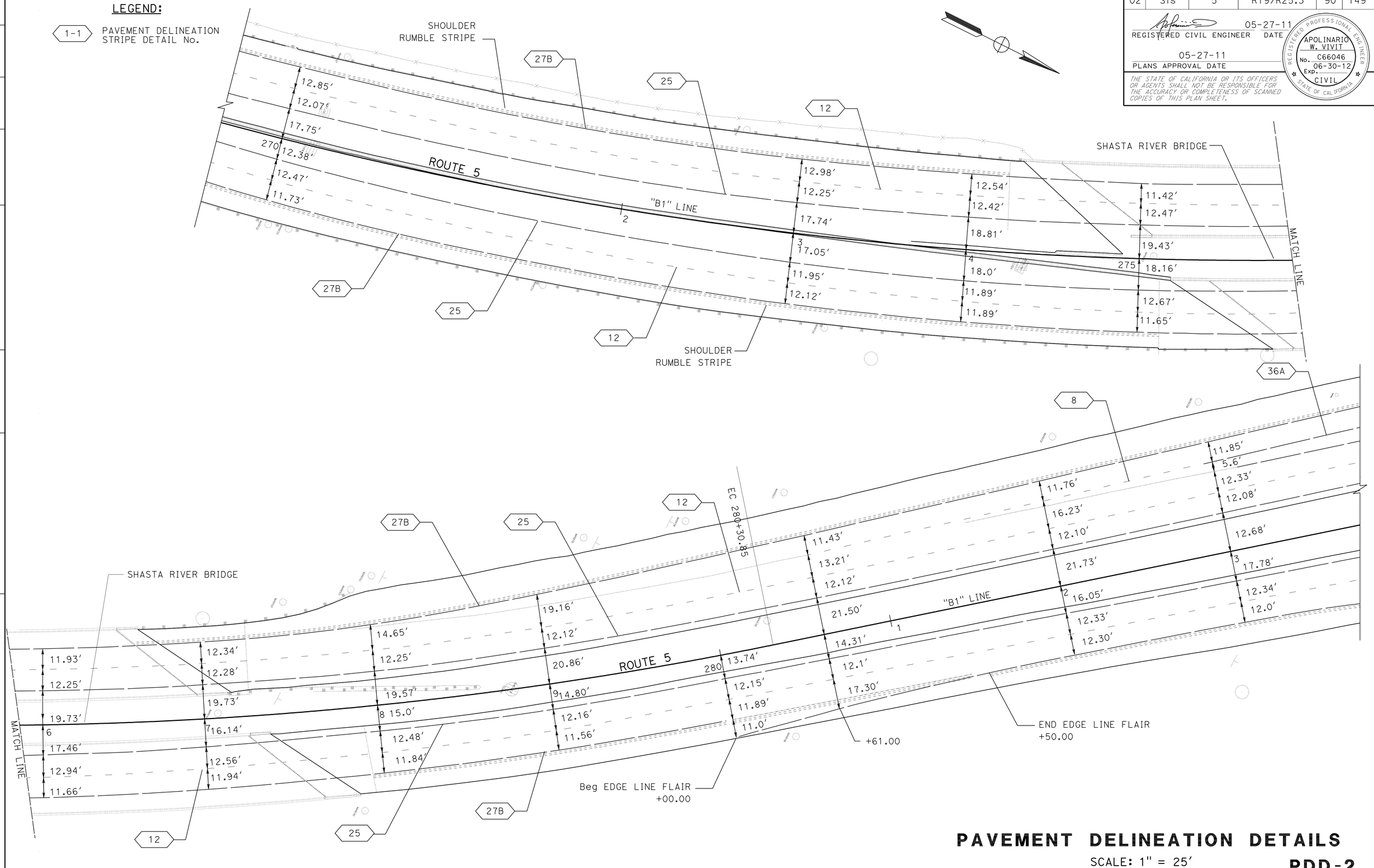

PAVEMENT DELINEATION DETAILS

SCALE: 1" = 25′

PDD-2

STATE OF CALIFORNIA - DEPARTMENT OF TRANSPORTATION
Caltrans® DESIGN

STEVE ALAWAR — APOLINARIO VIVIT — FUNCTIONAL SUPERVISOR: APOLINARIO VIVIT

CALCULATED-DESIGNED BY | CHECKED BY | REVISED BY | DATE REVISED

P:\proj\02\3E750_plans\pse\23e750nb002.dgn

LAST REVISION 05-27-11 | DATE PLOTTED => 01-JUN-2011 | TIME PLOTTED => 10:00

BORDER LAST REVISED 7/2/2010 | USERNAME => s115152 | DGN FILE => 23e750nb002.dgn | RELATIVE BORDER SCALE IS IN INCHES 0 1 2 3 | UNIT 0317 | PROJECT NUMBER & PHASE 02000201611

Dist	COUNTY	ROUTE	POST MILES TOTAL PROJECT	SHEET No.	TOTAL SHEETS
02	Sis	5	R19/R25.3	91	149

REGISTERED CIVIL ENGINEER 05-27-11 DATE

05-27-11
PLANS APPROVAL DATE

REGISTERED PROFESSIONAL ENGINEER APOLINARIO W. VIVIT No. C66046 Exp. 06-30-12 CIVIL STATE OF CALIFORNIA

THE STATE OF CALIFORNIA OR ITS OFFICERS OR AGENTS SHALL NOT BE RESPONSIBLE FOR THE ACCURACY OR COMPLETENESS OF SCANNED COPIES OF THIS PLAN SHEET.

TRAFFIC STRIPES AND PAVEMENT MARKERS

STATION\DIRECTION	PAVEMENT MARKER			TWO-COMPONENT PAINT TRAFFIC STRIPE							
	RETROREFLECTIVE-RECESSED			YELLOW	WHITE						
	TYPE C	TYPE G	TYPE H	4"	4"	8"		4" (BROKEN 17-7)	4" (BROKEN 18-12)	4" (BROKEN 18-12)	
				DETAIL 25	DETAIL 27B	DETAIL 36	DETAIL 36A	DETAIL 8	DETAIL 12	DETAIL 14A	
	EA	EA	EA	LF	LF	LF	LF	LF	LF	LF	
"B1"107+45 TO "B1"114+10 SB					665						
"B1"107+45 TO "B1"132+18 NB					2473						
"B1"107+45 TO "B1"415+00 NB		622	642	30,755					30,179		
"B1"107+45 TO "B1"415+00 SB		610	642	30,755					29,459		
"B1"114+10 TO "B1"116+60 SB		22			250	500					
"B1"116+60 TO "B1"159+75 SB					4315						
"B1"117+50 TO "B1"120+30 NB		13			280		280				
"B1"119+50 TO "B1"120+94 SB	4									144	
"B1"120+30 TO "B1"121+30 NB								100			
"B1"126+56 TO "B1"128+00 NB	4									144	
"B1"131+40 TO "B1"133+60 SB								220			
"B1"132+18 TO "B1"134+80 NB		23			262	524					
"B1"134+70 TO "B1"137+35 SB		12			265		265				
"B1"134+80 TO "B1"285+00 NB					15,020						
"B1"147+34 TO "B1"148+78 SB	4									144	
"B1"159+55 TO "B1"161+85 SB		21			230	460					
"B1"159+75 TO "B1"162+25 NB		11			250		250	100			
"B1"162+25 TO "B1"163+25 NB											
"B1"162+25 TO "B1"304+16 SB					14,191						
"B1"164+50 TO "B1"165+94 SB	4									144	
"B1"175+18 TO "B1"176+62 SB	4									144	
"B1"192+34 TO "B1"193+78 SB	4									144	
"B1"220+18 TO "B1"221+62 SB	4									144	
"B1"224+88 TO "B1"226+32 NB	4									144	
"B1"252+72 TO "B1"254+16 NB	4									144	
"B1"280+56 TO "B1"282+00 NB	4									144	
"B1"281+00 TO "B1"283+00 SB								200			
"B1"283+00 TO "B1"287+70 SB		21			470		470				
"B1"285+00 TO "B1"287+70 NB		24			270	540					
"B1"287+70 TO "B1"415+00 NB					12,730						
"B1"304+16 TO "B1"306+80 SB		23			264	528					
"B1"307+00 TO "B1"309+84 NB		13			284		284				
"B1"307+00 TO "B1"415+00 SB					10,800						
"B1"309+84 TO "B1"311+45 NB								161			
"B1"310+00 TO "B1"311+44 SB	4									144	
"B1"337+84 TO "B1"339+28 SB	4									144	
"B1"365+68 TO "B1"367+12 SB	4									144	
SUBTOTAL	52	1415	1284	61,510	63,019	2552	1549	781	59,638	1872	
TOTAL	2751			124,529		4101		781	61,510		

PAVEMENT DELINEATION QUANTITIES

PDQ-1

REVISED BY | DATE REVISED
STEVE ALAWAR | APOLINARIO VIVIT
CALCULATED-DESIGNED BY | CHECKED BY
FUNCTIONAL SUPERVISOR
APOLINARIO VIVIT

STATE OF CALIFORNIA - DEPARTMENT OF TRANSPORTATION
Caltrans® DESIGN

P:\proj\02\3E750_plans\pse\23e750nc001.dgn

LAST REVISION 05-27-11 | DATE PLOTTED => 01-JUN-2011 | TIME PLOTTED => 10:00

Dist	COUNTY	ROUTE	POST MILES TOTAL PROJECT	SHEET No.	TOTAL SHEETS
02	Sis	5	R19/R25.3	92	149

REGISTERED CIVIL ENGINEER 05-27-11 DATE

05-27-11
PLANS APPROVAL DATE

REGISTERED PROFESSIONAL ENGINEER APOLINARIO W. VIVIT No. C66046 Exp. 06-30-12 CIVIL STATE OF CALIFORNIA

THE STATE OF CALIFORNIA OR ITS OFFICERS OR AGENTS SHALL NOT BE RESPONSIBLE FOR THE ACCURACY OR COMPLETENESS OF SCANNED COPIES OF THIS PLAN SHEET.

ROADWAY QUANTITIES

SHEET	LOCATION	SIDE	ROADWAY EXCAVATION	COLDPLANE AC PAVEMENT	CLASS 2 AGGREGATE BASE	REPLACE AC SURFACING	HOT MIX ASPHALT	HOT MIX ASPHALT (25% RAP, LONG LIFE)	HOT MIX ASPHALT (15% MAX RAP, LONG LIFE)	TACK COAT	ASPHALT- RUBBER BINDER	SCREENINGS (HOT -APPLIED)	RUMBLE STRIP	CRACK EXISTING CONCRETE PAVEMENT	IMPORTED MATERIAL (SHOULDER BACKING)	REMOVE CONCRETE SIDEWALK	MINOR CONCRETE (SIDEWALK)	DESCRIPTION
			CY	SQYD	CY	CY	TON	TON	TON	TON	TON	TON	STA	SQYD	TON	CY	CY	
	STAGE 1																	
L-25,SC-6	403+65.09 TO 411+52.44	M	915.5		235.5		238.5											CONSTRUCT Temp CROSSOVER (NORTH NB TO SB), and Remove
L-16, SC-2	286+00.00 TO 293+77.28	M	597.1		265.2		268.5											CONSTRUCT Temp CROSSOVER (MIDDLE SB TO NB), and Remove
L-16	290+00 TO 295+13.55	SB		1596.7		12.3		431.1	511.9		4.1	25.5	11.1	1596.7	28.0			RECONSTRUCT ROADWAY
L-16 TO L-25	295+58.58 TO 412+72.30	SB		33,572.9		258.3		9064.7	10,856.6	209.5	85.7	537.2	232.4	33,572.9	1176.7			RECONSTRUCT ROADWAY
L-16 TO L-17	296+20 TO 304+70	SB							350.6									EDGEWOOD SB OFF RAMP
L-15 TO L-26	279+00 TO 408+00	SB	283.0				21.2											SLAB REPLACEMENT
	STAGE 2																	
SC-8	153+36.06 TO 160+20.86	M	502.5		236.2		239.1											CONSTRUCT Temp CROSSOVER (SOUTH NB TO SB), and Remove
L-6 TO L-15	156+84.23 TO 275+07.00	NB		50,417.0		89.1		8341.0	12,403.1	167.9	78.9	494.3	213.9		541.4			RECONSTRUCT ROADWAY
L-15, L-16	277+29.87 TO 290+00.00	NB		7643.1		26.9		943.6	1525.7		8.9	55.9	24.2		61.2			RECONSTRUCT ROADWAY
	STAGE 3																	
L-25. SC-8	403+65.09 TO 411+52.44	M	1135.9		368.9		373.5											CONSTRUCT Temp CROSSOVER (NORTH SB TO NB), and Remove
SC-13	287+04.1 TO 291+90.52	M	535.8		289.3		292.9											CONSTRUCT Temp CROSSOVER (MIDDLE NB TO SB), and Remove
L-16	290+00.00 TO 295+56.10	NB		1705.3				460.4	546.8	209.5	4.4	27.3	11.8	1705.3	29.9			RECONSTRUCT ROADWAY
L-16 TO L-25	290+00.00 TO 412+72.41	NB		33,482.5				9040.3	10,860.2		85.5	535.7	231.8	33,482.5	586.7			RECONSTRUCT ROADWAY, INCLUDES RAMP OVERLAY
L-16 TO L-17	296+20 TO 315+30	NB							463.0									EDGEWOOD NB ON RAMP
L-15 TO L-26	279+00 TO 408+00	NB	298.0				22.3											SLAB REPLACEMENT
	STAGE 4																	
SC-19	156+84.23 TO 160+20.86	M	552.0		286.2		289.8											CONSTRUCT Temp CROSSOVER (SOUTH SB TO NB), and Remove
L-6 TO L-15	168+30.00 TO 275+07.00	SB		53,203.3				8315.2	12,662.6	167.8	78.6	492.8	213.2		539.7			RECONSTRUCT ROADWAY
L-15 TO L-16	277+29.87 TO 290+00.00	SB		9273.9				993.3	1813.3		9.4	58.9	25.5		64.5			RECONSTRUCT ROADWAY
	STAGE 5																	
L-1 TO L-5	107+21.28 TO 147+68.33	SB		6701.6		44.7		1809.1	1884.5	41.8	17.1	107.2	40.2	6701.6	101.8			RECONSTRUCT ROADWAY
L-1 TO L-5	107+78.40 TO 147+72.43	NB		6682.1		44.5		1804.8	2668.7	41.3	17.1	106.9	40.1	6682.1	101.5			RECONSTRUCT ROADWAY
L-5, L-6	149+37.19 TO 156+84.23	SB		3169.9		21.1		858.6	894.3	2.2	8.1	50.7	19.0	3169.9	48.1			RECONSTRUCT ROADWAY
L-5, L-6	149+40.83 TO 156+84.23	NB		3132.7		20.9		848.5	1321.4	2.2	8.0	50.1	18.8	3132.7	47.6			RECONSTRUCT ROADWAY
	STAGE 6																	
L-1 TO L-4	107+30.17 TO 147+69.22	SB		4914.5				1326.7	2202.5	41.8	12.5	78.6	40.2	4914.5	101.8			RECONSTRUCT ROADWAY
L-1 TO L-5	107+39.96 TO 147+71.14	NB		4900.2				1323.5	1458.9	41.3	12.5	78.4	40.1	4900.2	101.5			RECONSTRUCT ROADWAY
L-5, L-6	149+37.06 TO 168+30.00	SB		2324.6				629.6	1029.3	2.2	5.9	37.2	19.0	2324.6	48.1			RECONSTRUCT ROADWAY
L-5, L-7	149+40.77 TO 168+30.00	NB		2297.3				622.2	685.9	2.2	5.9	36.8	18.8	2297.3	47.6			RECONSTRUCT ROADWAY
L-15	5/97 EB		655.7						61.6									RAMP CONFORM
L-5	5/265 BB		655.7						61.6									RAMP CONFORM
L-5	5/265 EB		655.7						61.6									RAMP CONFORM
L-15	SHASTA RIV BR EB		239.6						20.4									CONFORM
L-16	EDGEWOOD UC BB		239.6						20.4									CONFORM
L-16	EDGEWOOD UC EB		239.6						20.4									CONFORM
L-25	EDGEWOOD OH BB		655.7						61.6									CONFORM
Q-3	HMA DIKE LOCATIONS						202.4											SEE HMA DIKE TABLE
C-5	Exist RWIS AND CCTV															0.56	0.56	SEE SHEET C-5 FOR STATIONS AND LOCATIONS
C-8	MAINTENANCE PULLOUTS	NB	68.0		34.0				65.6						21.7		4.15	SEE SHEET C-8 FOR STATIONS
TOTAL			8229.4	225,017.7	1715.3	517.8	1948.3	46,812.7	64,512.1	929.7	442.6	2773.5	1200.1	104,480.3	3647.7	0.56	4.71	

ABBREVIATIONS:

M	MEDIAN
(N)	NOT A SEPARATE PAY ITEM, FOR INFORMATION ONLY
RWIS	ROADSIDE WEATHER INFORMATION SYSTEM
CCTV	CLOSED CIRCUIT TELEVISION SYSTEM

SUMMARY OF QUANTITIES

Q-1

REVISED BY | DATE REVISED
DELRAE VIOLETTI | APOLINARIO VIVIT
CALCULATED-DESIGNED BY | CHECKED BY
FUNCTIONAL SUPERVISOR: APOLINARIO VIVIT

STATE OF CALIFORNIA - DEPARTMENT OF TRANSPORTATION
Caltrans® DESIGN

P:\proj1\02\3E750_plans\pse\23e750pa001.dgn

LAST REVISION 05-27-11 | DATE PLOTTED => 01-JUN-2011 | TIME PLOTTED => 10:00

Dist	COUNTY	ROUTE	POST MILES TOTAL PROJECT	SHEET No.	TOTAL SHEETS
02	Sis	5	R19/R25.3	93	149

REGISTERED CIVIL ENGINEER 05-27-11 DATE

05-27-11
PLANS APPROVAL DATE

REGISTERED PROFESSIONAL ENGINEER APOLINARIO W. VIVIT No. C66046 Exp. 06-30-12 CIVIL STATE OF CALIFORNIA

THE STATE OF CALIFORNIA OR ITS OFFICERS OR AGENTS SHALL NOT BE RESPONSIBLE FOR THE ACCURACY OR COMPLETENESS OF SCANNED COPIES OF THIS PLAN SHEET.

NOTE:

1. (N) - NOT A SEPARATE PAY ITEM, FOR INFORMATION ONLY

METAL BEAM GUARD RAILING

	SHEET No.	STATIONS FROM	STATIONS TO	RECONSTRUCT MBGR LF	RECONSTRUCT DOUBLE MBGR LF	RECONSTRUCT TERMINAL SYSTEM EA	(N) BURIED POST END ANCHOR EA	TRANSITION RAILING (TYPE WB) EA	END ANCHOR ASSEMBLY (TYPE SFT) EA	MINOR CONCRETE (MINOR STRUCTURE) CY	(N) BAR REINFORCING STEEL LB	VEGETATION CONTROL (MINOR CONCRETE) SQYD	REMARKS
NORTHBOUND	L-1,2	"B1" 108+07.26, 57.48′ R+	"B1" 110+75.34, 62.10′ R+	301.8								134.1	
	L-3	"B1" 121+74.69, 87.78′ R+	"B1" 126+61.55, 78.84′ R+	502.4		1			1			240.0	
	L-4	"B1" 145+19.86, 11.02′ R+	"B1" 147+35.56, 34.21′ R+		216.1	1			1			110.5	CAT TERMINAL SYSTEM
	L-4	"B1" 147+35.56, 34.21′ R+	"B1" 147+58.96, 35.22′ R+	21.6								20.7	
	L-4	"B1" 147+48.79, 75.24′ R+	"B1" 147+64.84, 74.90′ R+	15.5		1			1			34.7	
	L-7,8	"B1" 181+11.38, 45.57′ R+	"B1" 192+70.90, 45.42′ R+	1165.2		1			1			453.4	
	L-9	"B1" 201+75.82, 47.48′ R+	"B1" 212+30.12, 48.25′ R+	1052.2		1			1			367.4	
	L-10,11,12	"B1" 219+70.49, 49.51′ R+	"B1" 238+02.99, 45.41′ R+	1801.2		1			1			617.1	
	L-14,15	"B1" 267+54.32, 51.01′ R+	"B1" 275+56.06, 50.83′ R+	823.9			1					377.3	
	L-16	"B1"295+19.59, 64.91′ R+				1		1	1	0.7	139.0	29.1	ANCHOR BLOCK
	L-16	"B1" 294+76.32, 10.17′ R+	"B1" 294+96.71, 18.73′ R+		22.0	1			1			24.2	CAT TERMINAL SYSTEM
	L-16	"B1" 294+96.71, 18.73′ R+	"B1" 295+27.02, 26.33′ R+	21.9				1		0.7	139.0	20.8	ANCHOR BLOCK
	L-25	"B1" 409+41.70, 77.71′ R+	"B1" 412+36.81, 75.64′ R+	296.6		1			1			119.7	
	L-25	"B1" 410+55.07, 27.25′ R+	"B1" 411+85.95, 35.00′ R+		136.0	1			1			74.9	CAT TERMINAL SYSTEM
	L-25	"B1" 411+85.95, 35.00′ R+	"B1" 412+37.96, 37.11′ R+	51.5								34.0	
	L-26	"B1" 415+13.65, 74.49′ R+	"B1" 416+76.40, 84.70′ R+	166.8								63.9	
SOUTHBOUND	L-1	"B1" 107+29.33, 72.38′ L+				1			1			29.3	
	L-1,2	"B1" 107+42.34, 32.42′ L+	"B1" 107+72.72, 31.36′ L+	29.9								24.4	
	L-1,2	"B1" 107+72.72, 31.36′ L+	"B1" 109+21.67, 19.25′ L+		148.5	1			1			80.4	CAT TERMINAL SYSTEM
	L-5	"B1" 149+64.01, 70.02′ L+				1			1			29.2	
	L-5	"B1" 149+44.79, 29.79′ L+	"B1" 149+70.22, 28.83′ L+	25.8								22.6	
	L-5	"B1" 149+70.22, 28.83′ L+	"B1" 151+66.96, 10.54′ L+		199.3	1			1			103.0	CAT TERMINAL SYSTEM
	L-9,10	"B1" 209+83.64, 42.72′ L+	"B1" 213+00.55, 59.43′ L+	326.1			1					118.2	
	L-10,11	"B1" 221+52.04, 41.21′ L+	"B1" 227+16.20, 40.47′ L+	564.3		1			1			220.4	
	L-11,12	"B1" 231+26.42, 40.48′ L+	"B1" 237+97.09, 45.06′ L+	689.4		1			1			323.0	
	L-13,14,15	"B1" 251+01.29, 95.09′ L+	"B1" 274+07.76, 53.40′ L+	2349.5								934.7	
	L-15	"B1" 276+88.65, 53.49′ L+	"B1" 277+54.71, 56.10′ L+	65.4		1			1			56.8	
	L-15	"B1" 277+41.77, 14.67′ L+	"B1" 277+62.99, 13.85′ L+	21.1								39.9	
	L-15	"B1" 277+62.99, 13.85′ L+	"B1" 278+27.84, 8.06′ L+		64.8	1			1			43.2	CAT TERMINAL SYSTEM
	L-16	"B1" 296+78.15, 25.48′ L+	"B1" 297+00.89, 19.77′ L+	23.6		1		1	1	0.7	139.0	21.6	ANCHOR BLOCK
	L-16	"B1" 297+00.89, 19.77′ L+	"B1" 297+17.11, 12.28′ L+		17.9	1			1			22.4	CAT TERMINAL SYSTEM
	L-16	"B1" 296+76.10, 64.01′ L+				1		1	1	0.7	139.0	29.0	ANCHOR BLOCK
	L-25	"B1" 408+89.50, 60.99′ L+	"B1" 412+44.69, 61.95′ L+	351.7								125.6	
	L-26	"B1" 415+33.29, 63.00′ L+	"B1" 419+87.10, 69.79′ L+	455.5		1		1	1	0.7	139.0	172.7	ANCHOR BLOCK
	L-26	"B1" 415+34.93, 22.93′ L+	"B1" 415+59.33, 16.70′ L+	25.0				1		0.7	139.0	22.2	ANCHOR BLOCK
	L-26	"B1" 415+59.33, 16.70′ L+	"B1" 416+78.34, 9.37′ L+		20.8	1			1			23.7	CAT TERMINAL SYSTEM
			TOTAL	11,147.8	825.3	23	2	6	23	4.3	834.0	5164.1	

SUMMARY OF QUANTITIES

Q-2

BRIAN STEINER — APOLINARIO VIVIT — CALCULATED-DESIGNED BY — CHECKED BY — REVISED BY — DATE REVISED — FUNCTIONAL SUPERVISOR: APOLINARIO VIVIT

STATE OF CALIFORNIA - DEPARTMENT OF TRANSPORTATION — DESIGN

P:\proj1\02\3E750_plans\pse\23e750pa002.dgn

LAST REVISION 05-27-11 — DATE PLOTTED => 01-JUN-2011 — TIME PLOTTED => 10:00

Dist	COUNTY	ROUTE	POST MILES TOTAL PROJECT	SHEET No.	TOTAL SHEETS
02	Sis	5	R19/R25.3	94	149

REGISTERED CIVIL ENGINEER DATE 05-27-11

05-27-11
PLANS APPROVAL DATE

REGISTERED PROFESSIONAL ENGINEER APOLINARIO W. VIVIT No. C66046 Exp. 06-30-12 CIVIL STATE OF CALIFORNIA

THE STATE OF CALIFORNIA OR ITS OFFICERS OR AGENTS SHALL NOT BE RESPONSIBLE FOR THE ACCURACY OR COMPLETENESS OF SCANNED COPIES OF THIS PLAN SHEET.

NOTE:

1. (N) - NOT A SEPARATE PAY ITEM, FOR INFORMATION ONLY

HMA DIKE

DIRECTION	SHEET No.	STATIONS FROM	STATIONS TO	REMOVE AC DIKE	PLACE HMA DIKE (TYPE E)	PLACE HMA DIKE (TYPE F)	HOT MIX ASPHALT
				LF	LF	LF	TON
NORTHBOUND	L-7,8	"B1" 181+11.38, 45.57′ R†	"B1" 188+25.10, 46.44′ R†	730.58		730.58	9.8
	L-9	"B1" 201+75.82, 47.48′ R†	"B1" 212+30.12, 48.25′ R†	1052.24		1052.24	14.1
	L-10,11,12	"B1" 219+70.49, 49.51′ R†	"B1" 238+02.99, 45.41′ R†	1805.22		1805.22	24.1
	L-13,14	"B1" 254+60.33, 49.35′ R†	"B1" 267+45.31, 46.03′ R†	1263.84	1263.84		33.3
	L-25	"B1" 403+64.24, 79.97′ R†	"B1" 412+55.80, 75.30′ R†	891.58	259.61	631.97	15.3
	L-26	"B1" 415+13.65, 74.49′ R†	"B1" 421+03.39, 119.17′ R†	591.57	406.53	185.04	13.2
SOUTHBOUND	L-6,7	"B1" 168+10.00, 54.00′ L†	"B1" 184+33.50, 53.00′ L†	1623.00	1623.00		42.7
	L-9	"B1" 209+83.64, 42.72′ L†	"B1" 212+25.55, 43.883′ L†	241.02		241.02	3.2
	L-10	"B1" 221+52.04, 41.21′ L†	"B1" 225+55.66, 41.15′ L†	423.54		423.54	5.7
	L-14,15	"B1" 263+21.63, 50.39′ L†	"B1" 274+30.26, 53.03′ L†	1085.95		1085.95	14.5
	L-25	"B1" 403+83.42, 58.59′ L†	"B1" 412+44.69, 61.95′ L†	881.22	506.75	374.47	16.6
	L-26	"B1" 415+12.34, 63.03′ L†	"B1" 421+52.03, 73.37′ L†	640.60	525.12	115.48	10.1
			TOTAL	11,230.36	4584.85	6645.51	*202.6

* ADDITIONAL QUANTITIES SHOWN ON SHEET Q-1

TEMPORARY WATER POLLUTION CONTROL

	TEMPORARY FIBER ROLL	TEMPORARY GRAVEL BAG BERM	TEMPORARY CHECK DAM	MOVE-IN/MOVE-OUT (TEMPORARY EROSION CONTROL)	TEMPORARY DRAINAGE INLET PROTECTION	TEMPORARY SOIL BINDER	RAIN EVENT ACTION PLAN (REAP)	STORMWATER ANNUAL REPORT	STORMWATER SAMPLING AND ANALYSIS DAY
	LF	LF	LF	EA	EA	SQYD	EA	EA	EA
TOTAL	3000	1200	100	1	50	87,100	27	3	5

EROSION CONTROL

STATION	(N) STRAW	(N) FIBER (EROSION CONTROL)	(N) PURE LIVE SEED (EROSION CONTROL)	(N) COMMERCIAL FERTILIZER (EROSION CONTROL)	(N) COMPOST (EROSION CONTROL)	(N) STABILIZING EMULSION	EROSION CONTROL (HYDROSEED)
	TON	LB	LB	LB	CY	LB	ACRE
"B1" 153+36.06 TO "B1" 160+20.86	2.5	3,500.0	130.0	100.0	2.2	300.0	1.0
"B1" 286+58.85 TO "B1" 288+92.00	2.5	3,500.0	130.0	100.0	2.2	300.0	1.0
"B1" 404+45.17 TO "B1" 406+62.47	2.5	3,500.0	130.0	100.0	2.2	300.0	1.0
TOTAL							3.0

SUMMARY OF QUANTITIES

Q-3

REVISED BY | DATE REVISED
BRIAN STEINER | APOLINARIO VIVIT
CALCULATED-DESIGNED BY | CHECKED BY
FUNCTIONAL SUPERVISOR: APOLINARIO VIVIT

STATE OF CALIFORNIA - DEPARTMENT OF TRANSPORTATION
Caltrans DESIGN

P:\proj1\02\3E750_plans\pse\23e750pa003.dgn

LAST REVISION 05-27-11 | DATE PLOTTED => 01-JUN-2011 | TIME PLOTTED => 10:00

Dist	COUNTY	ROUTE	POST MILES TOTAL PROJECT	SHEET No.	TOTAL SHEETS
02	Sis	5	R19.0/R25.3	95	149

ART 05-27-11
REGISTERED ELECTRICAL ENGINEER DATE

05-27-11
PLANS APPROVAL DATE

REGISTERED PROFESSIONAL ENGINEER A.P. ROBLES No. E15293 Exp. 3-31-13 ELECTRICAL STATE OF CALIFORNIA

THE STATE OF CALIFORNIA OR ITS OFFICERS OR AGENTS SHALL NOT BE RESPONSIBLE FOR THE ACCURACY OR COMPLETENESS OF SCANNED COPIES OF THIS PLAN SHEET.

NOTE:

1. FOR ACCURATE RIGHT OF WAY DATA, CONTACT RIGHT OF WAY ENGINEERING AT THE DISTRICT OFFICE.

ABBREVIATIONS:

SLI	SENSOR LEAD-IN CABLE
6SMFO	6 STRAND SINGLE MODE FIBER OPTIC CABLE
TC	TELEPHONE CABLE
STC	NEW SCREENED TRANSMISSION CABLE
stc	Exist SCREENED TRANSMISSION CABLE

EXISTING TRAFFIC MANAGEMENT SYSTEM ELEMENTS TO BE MAINTAINED

TYPE	PM	DESCRIPTION
HAR	Sis-5-20.25	WEED HAR
CCTV	Sis-5-22.64	SHASTA RIVER BRIDGE ON RIGHT SB SHOULDER

EXISTING LOOP DETECTORS TO BE PROTECTED

ID No.	PM	TYPE	DESCRIPTION
R301	Sis-5-R19.19	1-Ramp Loop	Jct. Rte. 97 WEED SB OFFRAMP
R302	Sis-5-R19.25	1-Ramp Loop	NB ONRAMP FROM Rte. 97/CENTRAL WEED
R303	Sis-5-R19.66	1-Ramp Loop	NB OFFRAMP TO Rte. 265/NORTH WEED
R304	Sis-5-R19.83	1-Ramp Loop	SB ONRAMP FROM Rte. 265/NORTH WEED
R305	Sis-5-R20.02	1-Ramp Loop	Jct. Rte. 265 SB OFFRAMP
R306	Sis-5-R19.89	1-Ramp Loop	NB ONRAMP FROM Rte. 265/NORTH WEED

LEGEND:

- (PB) OBJECT MARKER (TYPE PB) AND PULL BOX PAVING
- (pb) EXISTING PULL BOX MARKER
- ● SENSOR
- ○ EXISTING SENSOR
- ▬ AXLE SENSOR
- — EXISTING AXLE SENSOR

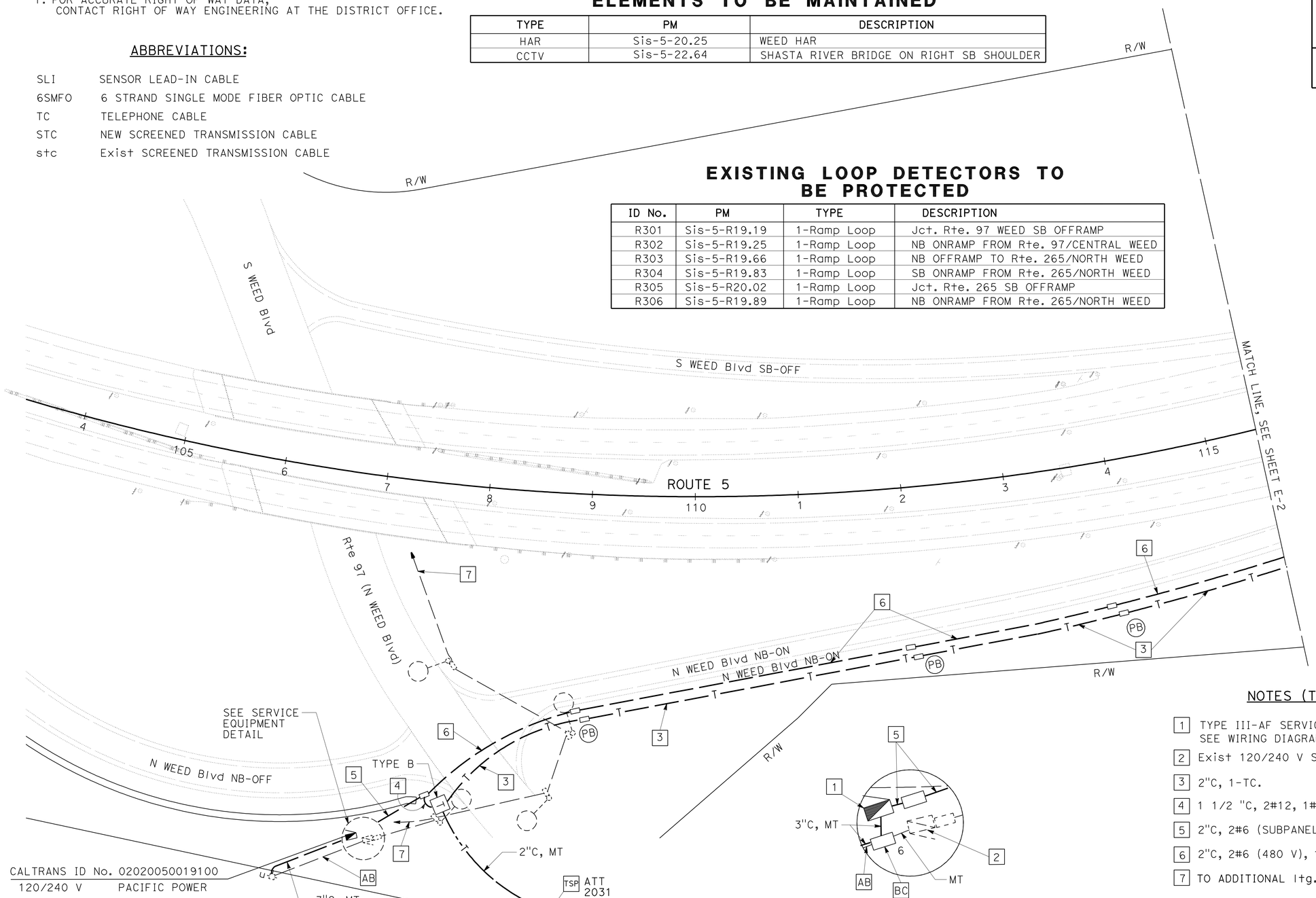

SERVICE EQUIPMENT DETAIL
NO SCALE

NOTES (THIS SHEET):

1. TYPE III-AF SERVICE EQUIPMENT ENCLOSURE (20" WIDE). SEE WIRING DIAGRAM, SHEET E-8.
2. Exist 120/240 V SERVICE (UNMETERED LTG). SYSTEM 19.020.
3. 2"C, 1-TC.
4. 1 1/2 "C, 2#12, 1#12G.
5. 2"C, 2#6 (SUBPANEL), 2#12 (TDC), 1#6G.
6. 2"C, 2#6 (480 V), 1#6G.
7. TO ADDITIONAL ltg.

THIS PLAN IS ACCURATE FOR ELECTRICAL WORK ONLY.

CLOSED CIRCUIT TELEVISION SYSTEM

SCALE: 1" = 50'

E-1

REVISED BY | DATE REVISED
ARTURO ROBLES | JAMES M. HANNIGAN
CALCULATED-DESIGNED BY | CHECKED BY
FUNCTIONAL SUPERVISOR: ROB STINGER

STATE OF CALIFORNIA - DEPARTMENT OF TRANSPORTATION
Caltrans® ELECTRICAL DESIGN

P:\proj1\02\3E750_plans\pse\23e750ua001.dgn

LAST REVISION 05-26-11 | DATE PLOTTED => 01-JUN-2011 | TIME PLOTTED => 10:00

Dist	COUNTY	ROUTE	POST MILES TOTAL PROJECT	SHEET No.	TOTAL SHEETS
02	Sis	5	R19.0/R25.3	96	149

ART 05-27-11
REGISTERED ELECTRICAL ENGINEER DATE

05-27-11
PLANS APPROVAL DATE

REGISTERED PROFESSIONAL ENGINEER A.P. ROBLES No. E15293 Exp. 3-31-13 ELECTRICAL STATE OF CALIFORNIA

THE STATE OF CALIFORNIA OR ITS OFFICERS OR AGENTS SHALL NOT BE RESPONSIBLE FOR THE ACCURACY OR COMPLETENESS OF SCANNED COPIES OF THIS PLAN SHEET.

NOTE:

1. FOR ACCURATE RIGHT OF WAY DATA, CONTACT RIGHT OF WAY ENGINEERING AT THE DISTRICT OFFICE.

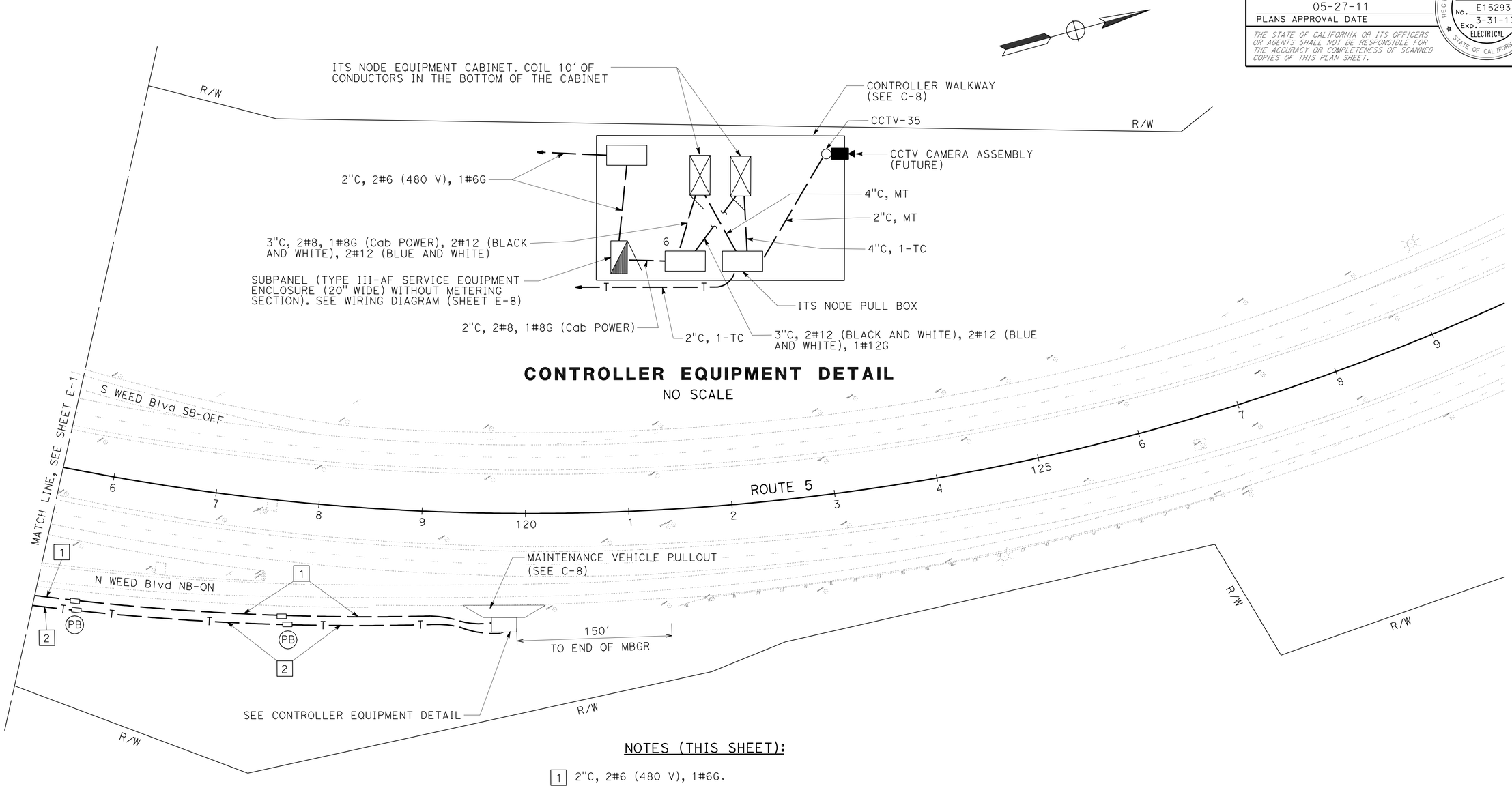

NOTES (THIS SHEET):

1. 2"C, 2#6 (480 V), 1#6G.
2. 2"C, 1-TC.

CLOSED CIRCUIT TELEVISION SYSTEM

SCALE: 1" = 50'

E-2

THIS PLAN IS ACCURATE FOR ELECTRICAL WORK ONLY.

STATE OF CALIFORNIA - DEPARTMENT OF TRANSPORTATION
Caltrans ELECTRICAL DESIGN

FUNCTIONAL SUPERVISOR: ROB STINGER
CALCULATED-DESIGNED BY: ARTURO ROBLES
CHECKED BY: JAMES M. HANNIGAN
REVISED BY / DATE REVISED

P:\proj1\02\3E750_plans\pse\23e750ua002.dgn

LAST REVISION / DATE PLOTTED => 01-JUN-2011 / TIME PLOTTED => 10:00

Dist	COUNTY	ROUTE	POST MILES TOTAL PROJECT	SHEET No.	TOTAL SHEETS
02	Sis	5	R19.0/R25.3	97	149

REGISTERED CIVIL ENGINEER 05-27-11 DATE

05-27-11
PLANS APPROVAL DATE

REGISTERED PROFESSIONAL ENGINEER THERESA ANDERSON No. C77957 Exp. 6-30-11 CIVIL STATE OF CALIFORNIA

THE STATE OF CALIFORNIA OR ITS OFFICERS OR AGENTS SHALL NOT BE RESPONSIBLE FOR THE ACCURACY OR COMPLETENESS OF SCANNED COPIES OF THIS PLAN SHEET.

NOTE:

1. FOR ACCURATE RIGHT OF WAY AND ACCESS DATA, CONTACT RIGHT OF WAY ENGINEERING AT THE DISTRICT OFFICE.

NOTES (THIS SHEET):

1. RC pb AND REPLACE WITH ITS NODE PB.
2. Exist 2"C, 2 sensor cables, REMOVE 2 sensor cables, ADD 4-SLI.
3. PROVIDE OBJECT MARKER (TYPE PB) WITHOUT PULL BOX PAVING.
4. Exist 1 1/4"C, 2 telephone cables, REMOVE 1 telephone cable, ADD 1-6SMFO.
5. Exist 2"C, 1 telephone cable, REMOVE 1 telephone cable, ADD 1-6SMFO.
6. Exist 3"C, 4 sensor cables, REMOVE 4 sensor cables, ADD 4-SLI.
7. Exist 2"C, 3#2, 2#4.
8. Exist 2"C, 3#2.
9. Exist 2"C, 1 sensor cable, REMOVE 1 sensor cable, ADD 4-SLI.

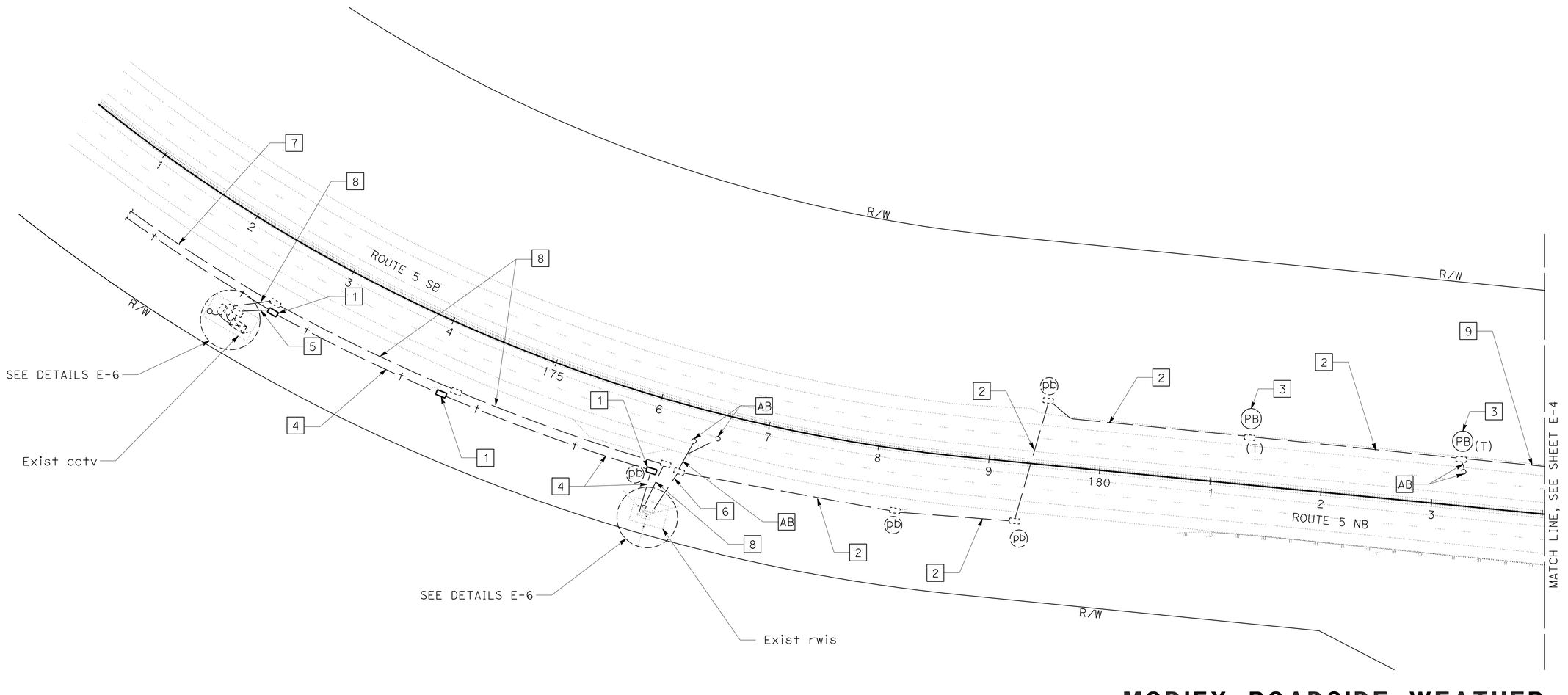

MODIFY ROADSIDE WEATHER INFORMATION SYSTEM

SCALE: 1" = 50'

E-3

THIS PLAN IS ACCURATE FOR ELECTRICAL WORK ONLY.

STATE OF CALIFORNIA - DEPARTMENT OF TRANSPORTATION
Caltrans® ELECTRICAL DESIGN

FUNCTIONAL SUPERVISOR: ROB STINGER
CALCULATED-DESIGNED BY: TERRY ANDERSON
CHECKED BY: ARTURO ROBLES
REVISED BY / DATE REVISED

P:\proj1\02\3E750_plans\pse\23e750ua003.dgn

LAST REVISION 03-30-11 | DATE PLOTTED => 01-JUN-2011 | TIME PLOTTED => 10:01

BORDER LAST REVISED 7/2/2010 | USERNAME => s115152 | DGN FILE => 23e750ua003.dgn | RELATIVE BORDER SCALE IS IN INCHES 0 1 2 3 | UNIT 0147 | PROJECT NUMBER & PHASE 02000201611

Dist	COUNTY	ROUTE	POST MILES TOTAL PROJECT	SHEET No.	TOTAL SHEETS
02	Sis	5	R19.0/R25.3	98	149

REGISTERED CIVIL ENGINEER 05-27-11 DATE

05-27-11
PLANS APPROVAL DATE

REGISTERED PROFESSIONAL ENGINEER THERESA ANDERSON No. C77957 Exp. 6-30-11 CIVIL STATE OF CALIFORNIA

THE STATE OF CALIFORNIA OR ITS OFFICERS OR AGENTS SHALL NOT BE RESPONSIBLE FOR THE ACCURACY OR COMPLETENESS OF SCANNED COPIES OF THIS PLAN SHEET.

NOTE:

1. FOR ACCURATE RIGHT OF WAY AND ACCESS DATA, CONTACT RIGHT OF WAY ENGINEERING AT THE DISTRICT OFFICE.

NOTES (THIS SHEET):

1. INSTALL PAVEMENT SENSOR IN THE CENTER OF THE LANE, PER MANUFACTURER'S INSTRUCTIONS.
2. Exist 2"C, 1 sensor cable, REMOVE 1 sensor cable, ADD 2 MANUFACTURER'S CABLES.
3. Exist 2"C, 1 sensor cable, REMOVE 1 sensor cable, ADD 4-SLI.
4. PROVIDE OBJECT MARKER (TYPE PB) WITHOUT PULL BOX PAVING.
5. INSTALL PAVEMENT SENSOR AND SUBSURFACE TEMPERATURE PROBE IN THE CENTER OF THE LANE, PER MANUFACTURER'S INSTRUCTIONS.
6. 2"C, 2 MANUFACTURER'S CABLES.
7. SPLICE MANUFACTURER'S CABLE TO SLI.

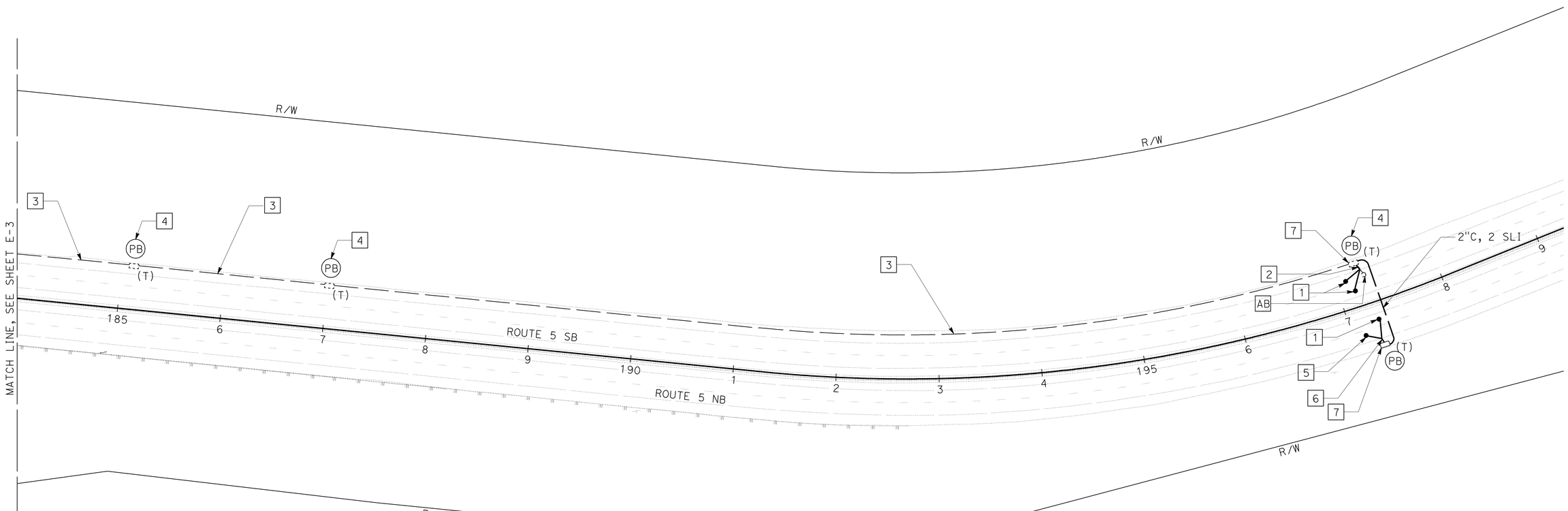

MODIFY ROADSIDE WEATHER INFORMATION SYSTEM

SCALE: 1" = 50'

E-4

THIS PLAN IS ACCURATE FOR ELECTRICAL WORK ONLY.

STATE OF CALIFORNIA - DEPARTMENT OF TRANSPORTATION
Caltrans ELECTRICAL DESIGN

FUNCTIONAL SUPERVISOR: ROB STINGER
CALCULATED-DESIGNED BY: TERRY ANDERSON
CHECKED BY: ARTURO ROBLES
REVISED BY / DATE REVISED

P:\proj1\02\3E750_plans\pse\23e750ua004.dgn

LAST REVISION 03-30-11 | DATE PLOTTED => 01-JUN-2011 | TIME PLOTTED => 10:01

BORDER LAST REVISED 7/2/2010 | USERNAME => s115152 | DGN FILE => 23e750ua004.dgn | RELATIVE BORDER SCALE IS IN INCHES 0 1 2 3 | UNIT 0147 | PROJECT NUMBER & PHASE 02000201611

Dist	COUNTY	ROUTE	POST MILES TOTAL PROJECT	SHEET No.	TOTAL SHEETS
02	Sis	5	R19.0/R25.3	99	149

J. Hannigan 05-27-11
REGISTERED ELECTRICAL ENGINEER DATE

05-27-11
PLANS APPROVAL DATE

REGISTERED PROFESSIONAL ENGINEER J.M. HANNIGAN No. E13665 Exp. 6-30-11 ELECTRICAL STATE OF CALIFORNIA

THE STATE OF CALIFORNIA OR ITS OFFICERS OR AGENTS SHALL NOT BE RESPONSIBLE FOR THE ACCURACY OR COMPLETENESS OF SCANNED COPIES OF THIS PLAN SHEET.

NOTE:

1. FOR ACCURATE RIGHT OF WAY AND ACCESS DATA, CONTACT RIGHT OF WAY ENGINEERING AT THE DISTRICT OFFICE.

NOTES (THIS SHEET):

1. COIL 10′ OF LOOP CONDUCTORS IN PULL BOX. LOCATE PULL BOX ADJACENT TO SIGN.
2. SLOTS SHALL BE FILLED WITH ASPHALTIC EMULSION SEALANT.
3. SLOTS SHALL BE FILLED WITH HOT-MELT RUBBERIZED ASPHALT SEALANT.

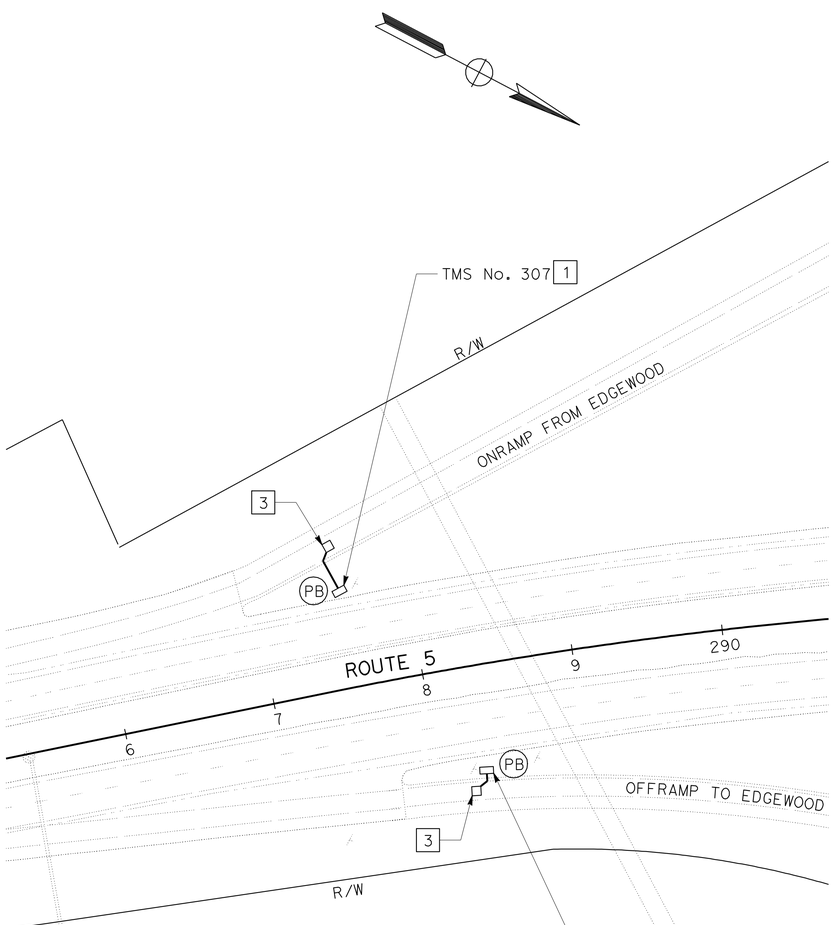

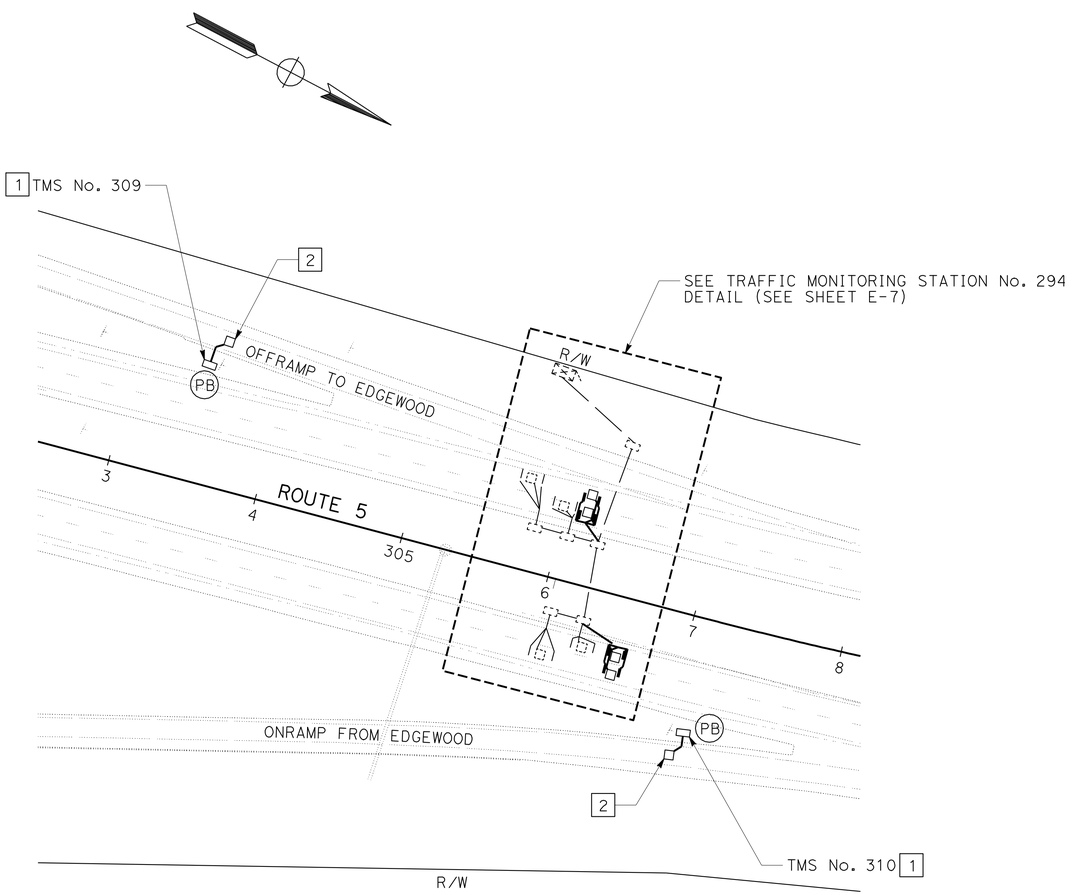

MODIFY TRAFFIC MONITORING STATION

SCALE: 1" = 50′

E-5

THIS PLAN IS ACCURATE FOR ELECTRICAL WORK ONLY.

REVISED BY | DATE REVISED
JAMES M. HANNIGAN | ARTURO ROBLES
CALCULATED-DESIGNED BY | CHECKED BY
FUNCTIONAL SUPERVISOR: ROB STINGER

STATE OF CALIFORNIA - DEPARTMENT OF TRANSPORTATION
Caltrans® ELECTRICAL DESIGN

P:\proj1\02\3E750_plans\pse\23e750ua005.dgn

LAST REVISION 03-30-11 | DATE PLOTTED => 01-JUN-2011 | TIME PLOTTED => 10:01

Dist	COUNTY	ROUTE	POST MILES TOTAL PROJECT	SHEET No.	TOTAL SHEETS
02	Sis	5	R19.0/R25.3	100	149

REGISTERED CIVIL ENGINEER 05-27-11 DATE

05-27-11
PLANS APPROVAL DATE

REGISTERED PROFESSIONAL ENGINEER THERESA ANDERSON No. C77957 Exp. 6-30-11 CIVIL STATE OF CALIFORNIA

THE STATE OF CALIFORNIA OR ITS OFFICERS OR AGENTS SHALL NOT BE RESPONSIBLE FOR THE ACCURACY OR COMPLETENESS OF SCANNED COPIES OF THIS PLAN SHEET.

NOTES (THIS SHEET):

1. RC PB AND REPLACE WITH ITS NODE PB.
2. COIL 6' OF CABLES IN BOTTOM OF EQUIPMENT ENCLOSURE.
3. COIL 3' OF POWER CONDUCTORS IN BOTTOM OF DISCONNECT (BBS).
4. Exist 1 1/4"C, 2 telephone cables, REMOVE 1 telephone cable, ADD 1 6SMFO.
5. Exist 2"C, 1 telephone cable, REMOVE 1 telephone cable, ADD 1 6SMFO.
6. COIL 25' OF 6SMFO IN ITS NODE PB.
7. Exist 2"C, 2#4 (Util POWER).
8. Exist 2"C, 3#2.

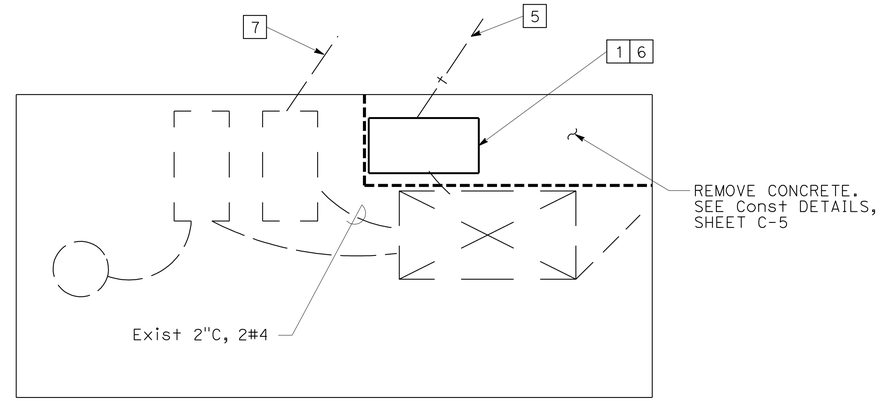

CCTV WALKWAY

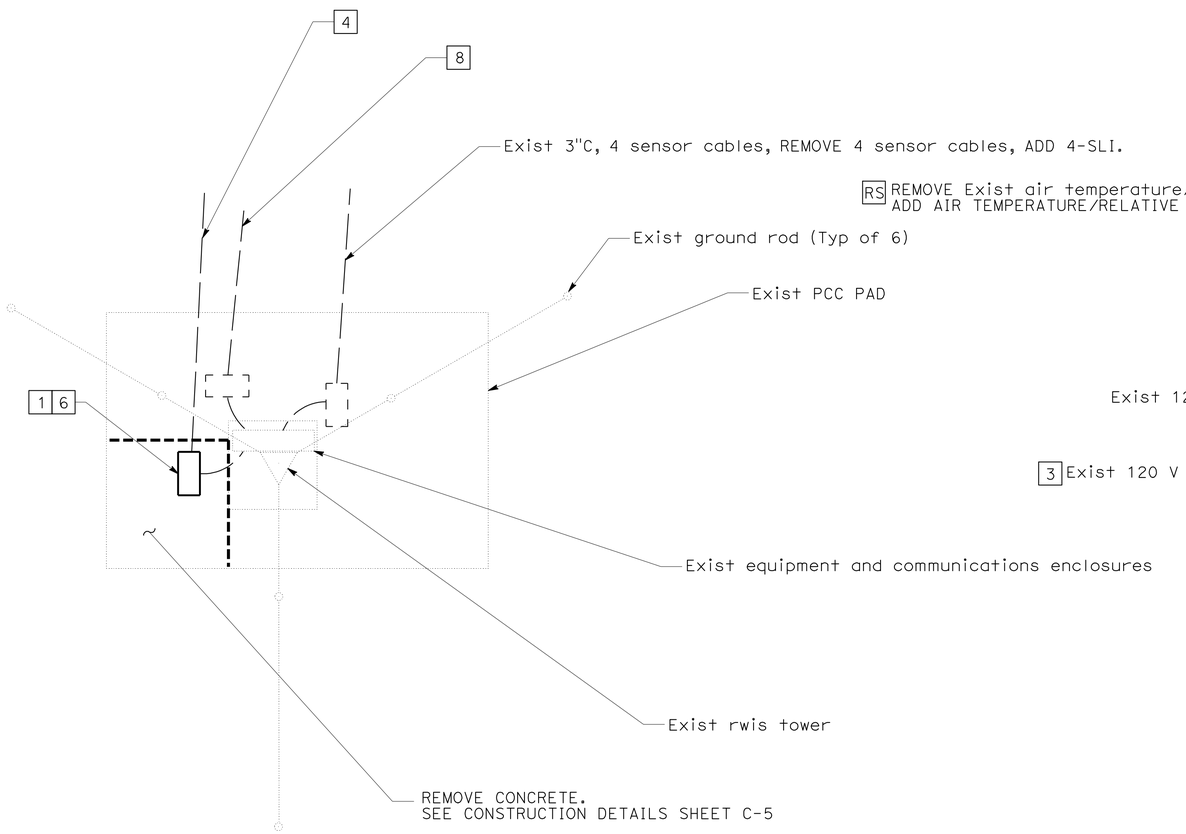

RWIS WALKWAY

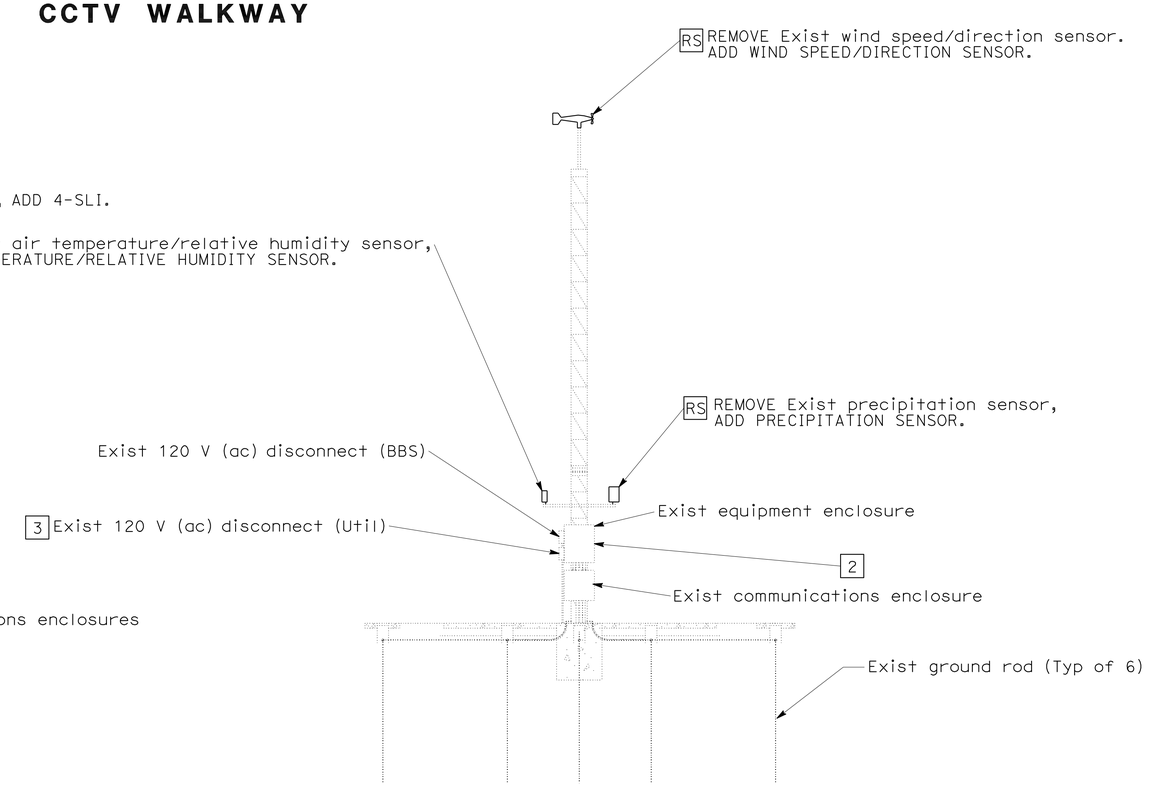

RWIS TOWER AND SENSOR CONFIGURATION

DETAILS
NO SCALE

E-6

THIS PLAN IS ACCURATE FOR ELECTRICAL WORK ONLY.

TERRY ANDERSON — REVISED BY — DATE REVISED
ARTURO ROBLES — CALCULATED-DESIGNED BY — CHECKED BY
ROB STINGER — FUNCTIONAL SUPERVISOR

STATE OF CALIFORNIA - DEPARTMENT OF TRANSPORTATION
Caltrans ELECTRICAL DESIGN

P:\proj1\02\3E750_plans\pse\23e750ua006.dgn

LAST REVISION 03-30-11 | DATE PLOTTED => 01-JUN-2011 | TIME PLOTTED => 10:01