Dist	COUNTY	ROUTE	POST MILES TOTAL PROJECT	SHEET No.	TOTAL SHEETS
02	Sha	299	47.5/48.1	1	64

STATE OF CALIFORNIA

DEPARTMENT OF TRANSPORTATION

ACHSSTP-P299(192)E

PROJECT PLANS FOR CONSTRUCTION ON

STATE HIGHWAY

PROJECT DESCRIPTION

IN SHASTA COUNTY NEAR INGOT FROM 4.9 MILES TO 4.3 MILES WEST OF BUZZARD ROOST ROAD

TO BE SUPPLEMENTED BY STANDARD PLANS DATED MAY 2010

INDEX OF PLANS

SHEET No.	DESCRIPTION
1	TITLE AND LOCATION MAP
2	TYPICAL CROSS SECTIONS
3-4	LAYOUTS
5-7	PROFILES AND SUPERELEVATION DIAGRAMS
8-11	CONSTRUCTION DETAILS
12-28	DRAINAGE PLANS, PROFILES, DETAILS AND QUANTITIES
29-30	UTILITY PLANS
31	CONSTRUCTION AREA SIGNS
32-34	PAVEMENT DELINEATION AND SIGN PLANS
35-36	PAVEMENT DELINEATION AND SIGN QUANTITIES
37	SUMMARY OF QUANTITIES
38-40	EROSION CONTROL PLANS
41-64	REVISED STANDARD PLANS

THE STANDARD PLANS LIST APPLICABLE TO THIS CONTRACT IS INCLUDED IN THE NOTICE TO BIDDERS AND SPECIAL PROVISIONS BOOK.

LOCATION MAP

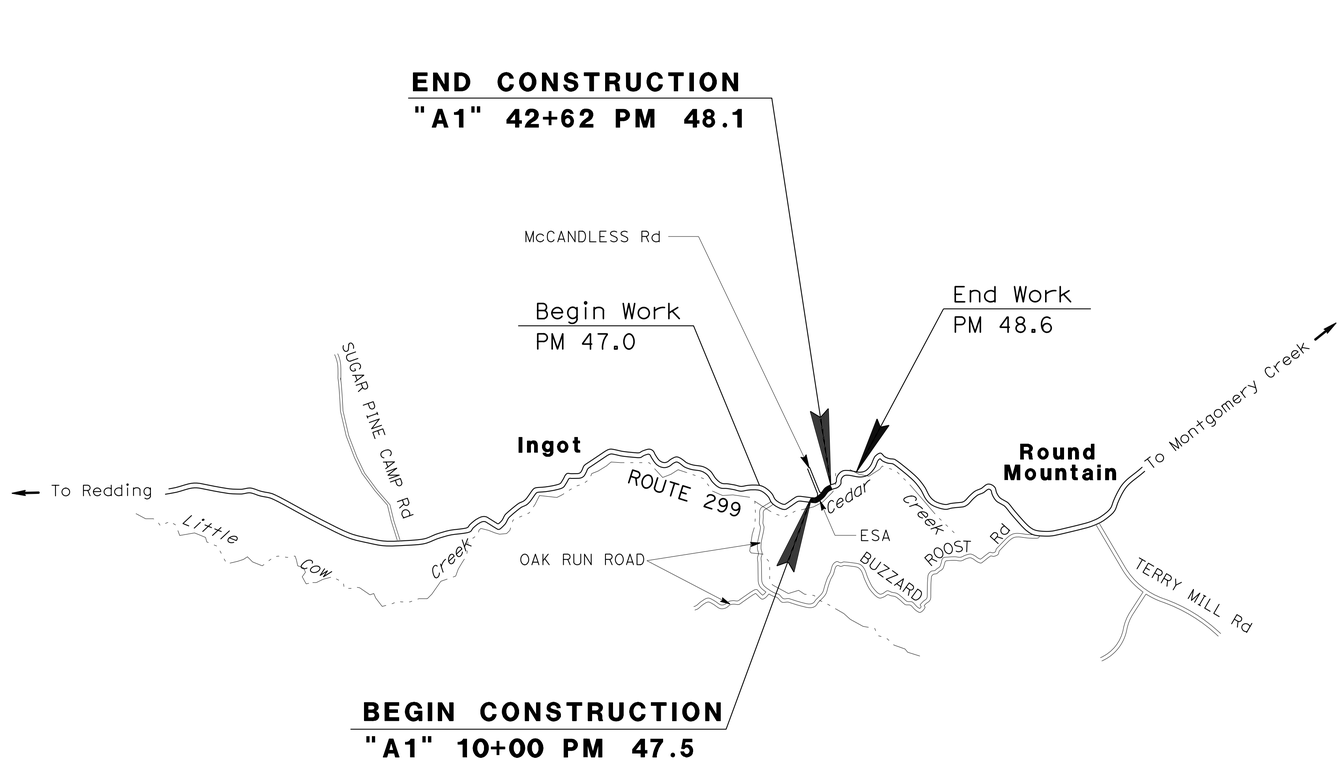

NO SCALE

THE CONTRACTOR SHALL POSSESS THE CLASS (OR CLASSES) OF LICENSE AS SPECIFIED IN THE "NOTICE TO BIDDERS."

PROJECT ENGINEER REGISTERED CIVIL ENGINEER — DATE 03-26-15

March 26, 2015
PLANS APPROVAL DATE

REGISTERED PROFESSIONAL ENGINEER — SHAUN ALEXANDER — No. 70833 — Exp. 6-30-15 — CIVIL — STATE OF CALIFORNIA

THE STATE OF CALIFORNIA OR ITS OFFICERS OR AGENTS SHALL NOT BE RESPONSIBLE FOR THE ACCURACY OR COMPLETENESS OF ELECTRONIC COPIES OF THIS PLAN SHEET.

CONTRACT No.	02-4E8904
PROJECT ID	0212000062

LAST REVISION 03-26-15

DATE PLOTTED => 30-MAR-2015
TIME PLOTTED => 09:28

PROJECT MANAGER: PHIL BAKER
DESIGN ENGINEER: AL TRUJILLO

P:\proj1\02\4E890_plans\pse\24e890ab001.dgn

Dist	COUNTY	ROUTE	POST MILES TOTAL PROJECT	SHEET No.	TOTAL SHEETS
02	Sha	299	47.5/48.1	2	64

Shaun Alexander 03-26-15
REGISTERED CIVIL ENGINEER DATE

03-26-15
PLANS APPROVAL DATE

REGISTERED PROFESSIONAL ENGINEER SHAUN ALEXANDER No. 70833 Exp. 6-30-15 STATE OF CALIFORNIA

THE STATE OF CALIFORNIA OR ITS OFFICERS OR AGENTS SHALL NOT BE RESPONSIBLE FOR THE ACCURACY OR COMPLETENESS OF ELECTRONIC COPIES OF THIS PLAN SHEET.

NOTES:

1. DIMENSIONS OF THE PAVEMENT STRUCTURES (STRUCTURAL SECTIONS) ARE SUBJECT TO TOLERANCES SPECIFIED IN THE STANDARD SPECIFICATIONS.
2. SUPERELEVATIONS ARE SHOWN ON THE SUPERELEVATION DIAGRAM.

ABBREVIATIONS:

ShB	SHOULDER BACKING
VCMC	VEGETATION CONTROL (MINOR CONCRETE)

DESIGN DESIGNATION:

ADT (2015)	5300	D	59%
ADT (2035)	8500	T	11%
DHV (2015)	580	V	55 MPH
EAL_{20}	4,994,200	TI_{20}	11

CLIMATE REGION:

LOW MOUNTAIN

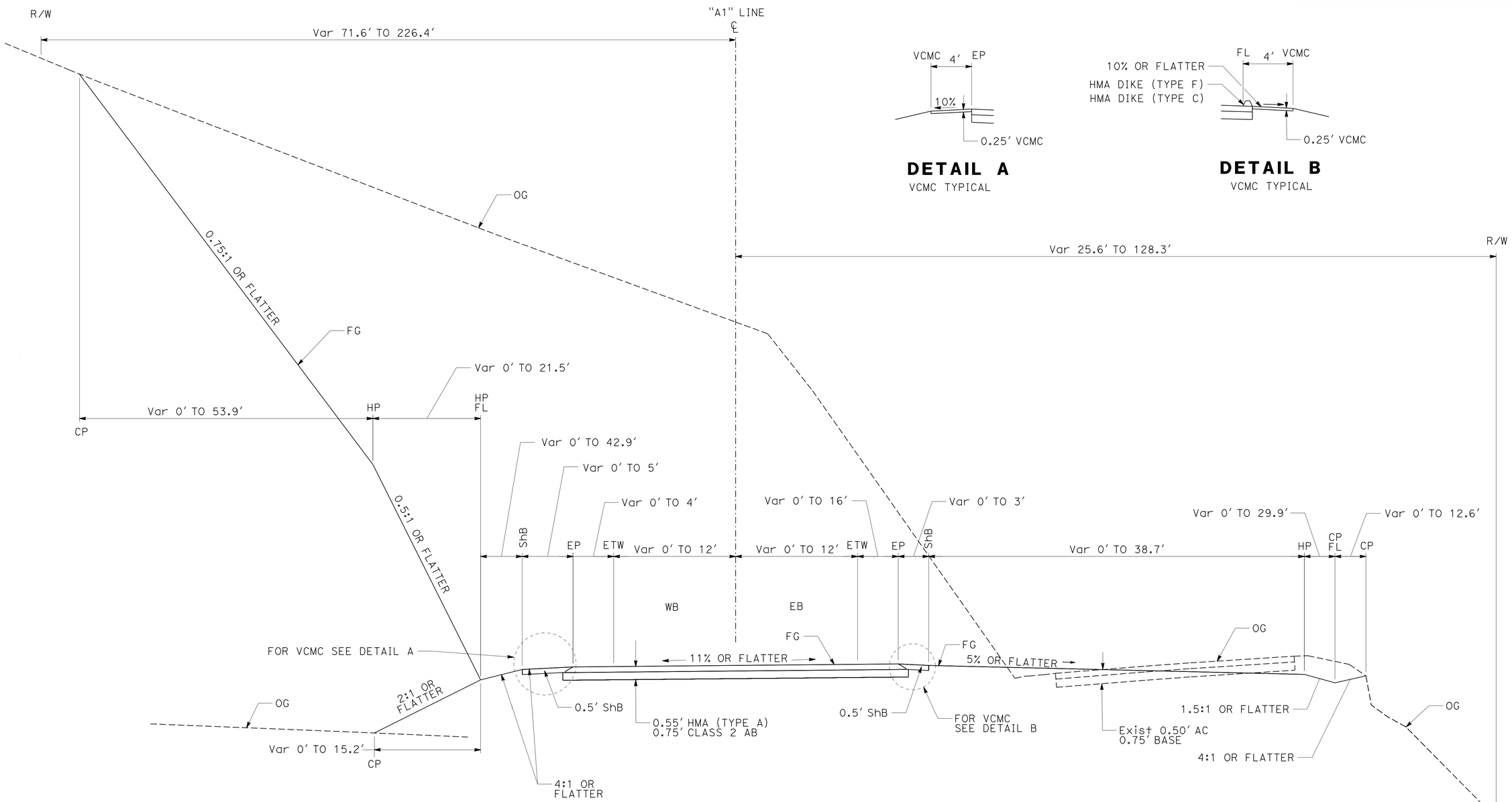

DETAIL A
VCMC TYPICAL

DETAIL B
VCMC TYPICAL

ROUTE 299
"A1" 10+50 TO 41+75

TYPICAL CROSS SECTIONS
NO SCALE

X-1

REVISED BY	DATE REVISED
BILL LEHMAN	SHAUN ALEXANDER
CALCULATED-DESIGNED BY	CHECKED BY
FUNCTIONAL SUPERVISOR	AL TRUJILLO

STATE OF CALIFORNIA - DEPARTMENT OF TRANSPORTATION
Caltrans **DESIGN**

P:\proj1\02\4E890_plans\pse\24e890ca001.dgn

LAST REVISION 03-26-15 | DATE PLOTTED => 30-MAR-2015 | TIME PLOTTED => 09:28

Dist	COUNTY	ROUTE	POST MILES TOTAL PROJECT	SHEET No.	TOTAL SHEETS
02	Sha	299	47.5/48.1	3	64

REGISTERED CIVIL ENGINEER DATE 03-26-15

PLANS APPROVAL DATE 03-26-15

REGISTERED PROFESSIONAL ENGINEER SHAUN ALEXANDER No. 70833 Exp. 6-30-15 STATE OF CALIFORNIA

THE STATE OF CALIFORNIA OR ITS OFFICERS OR AGENTS SHALL NOT BE RESPONSIBLE FOR THE ACCURACY OR COMPLETENESS OF ELECTRONIC COPIES OF THIS PLAN SHEET.

LEGEND:

COLD PLANE ASPHALT CONCRETE PAVEMENT

ABBREVIATIONS:

CPACP	COLD PLANE ASPHALT CONCRETE PAVEMENT
ShB	SHOULDER BACKING
SE	SAFETY EDGE
TCE	TEMPORARY CONSTRUCTION EASEMENT
AITS	ALTERNATIVE IN-LINE TERMINAL SYSTEM
REW	RAIL ELEMENT WALL
AFTS	ALTERNATIVE FLARED TERMINAL SYSTEM
VCMC	VEGETATION CONTROL (MINOR CONCRETE)
MGS	MIDWEST GUARDRAIL SYSTEM
TFESA	Temp FENCE (TYPE ESA)

NOTES:

1. FOR ACCURATE RIGHT OF WAY DATA, CONTACT RIGHT OF WAY ENGINEERING AT THE DISTRICT OFFICE.
2. ESA SHOWS LOCATION OF ESA IN RELATION TO TFESA.

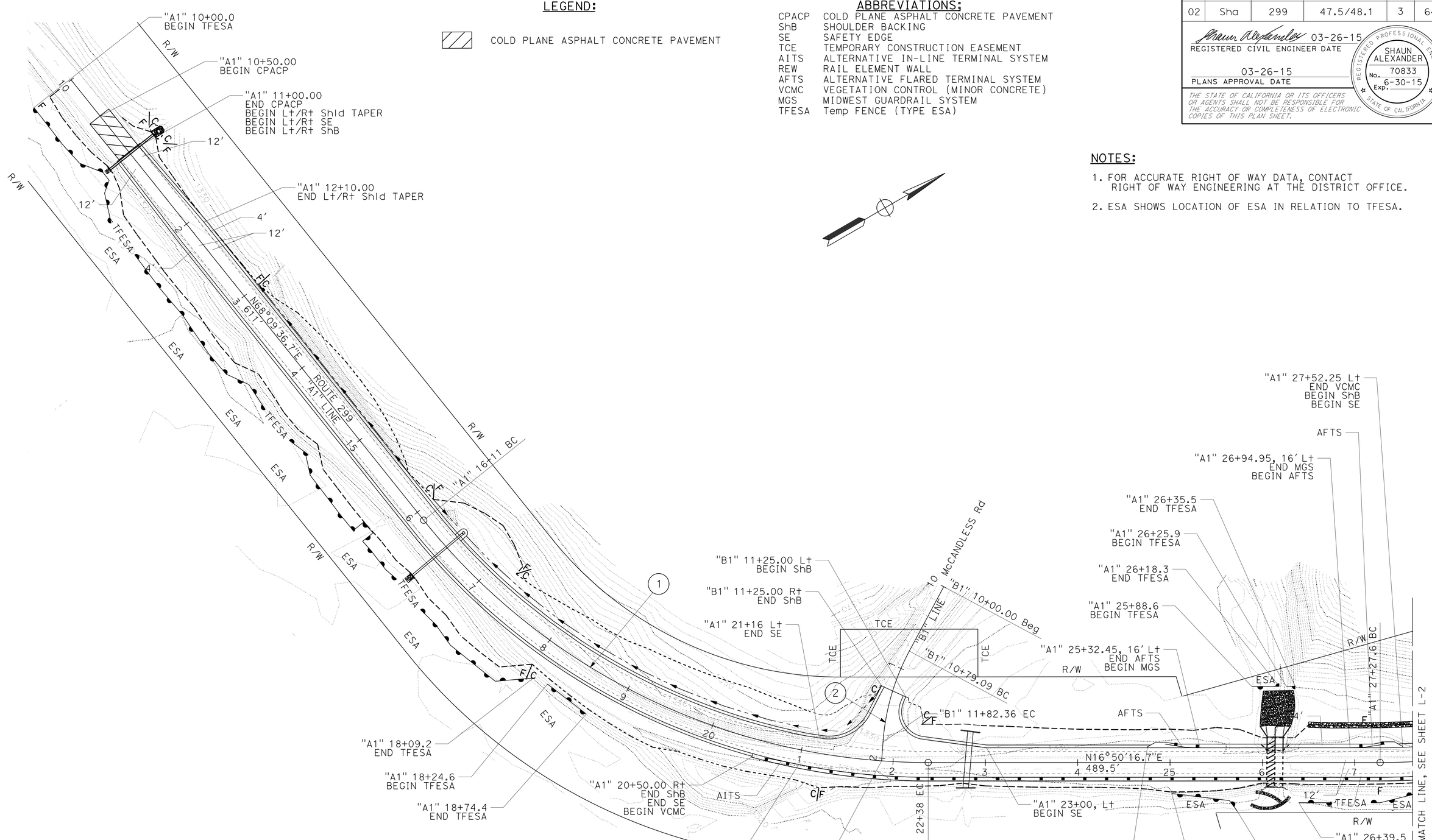

CURVE DATA

No.	R	Δ	T	L
1	700'	51°19'20"	336.30'	627.02'
2	247'	23°24'34"	51.17'	100.92'

LAYOUT

SCALE: 1" = 50'

L-1

REVISED BY	DATE REVISED	BILL LEHMAN	SHAUN ALEXANDER
CALCULATED-DESIGNED BY	CHECKED BY	FUNCTIONAL SUPERVISOR	AL TRUJILLO

STATE OF CALIFORNIA - DEPARTMENT OF TRANSPORTATION

Caltrans **DESIGN**

P:\proj1\02\4E890_plans\pse\24e890ea001.dgn

LAST REVISION 03-26-15 | DATE PLOTTED => 30-MAR-2015 | TIME PLOTTED => 09:28

Dist	COUNTY	ROUTE	POST MILES TOTAL PROJECT	SHEET No.	TOTAL SHEETS
02	Sha	299	47.5/48.1	4	64

Shaun Alexander 03-26-15
REGISTERED CIVIL ENGINEER DATE

03-26-15
PLANS APPROVAL DATE

REGISTERED PROFESSIONAL ENGINEER SHAUN ALEXANDER No. 70833 Exp. 6-30-15 STATE OF CALIFORNIA

THE STATE OF CALIFORNIA OR ITS OFFICERS OR AGENTS SHALL NOT BE RESPONSIBLE FOR THE ACCURACY OR COMPLETENESS OF ELECTRONIC COPIES OF THIS PLAN SHEET.

NOTE:

1. FOR ACCURATE RIGHT OF WAY DATA, CONTACT RIGHT OF WAY ENGINEERING AT THE DISTRICT OFFICE.

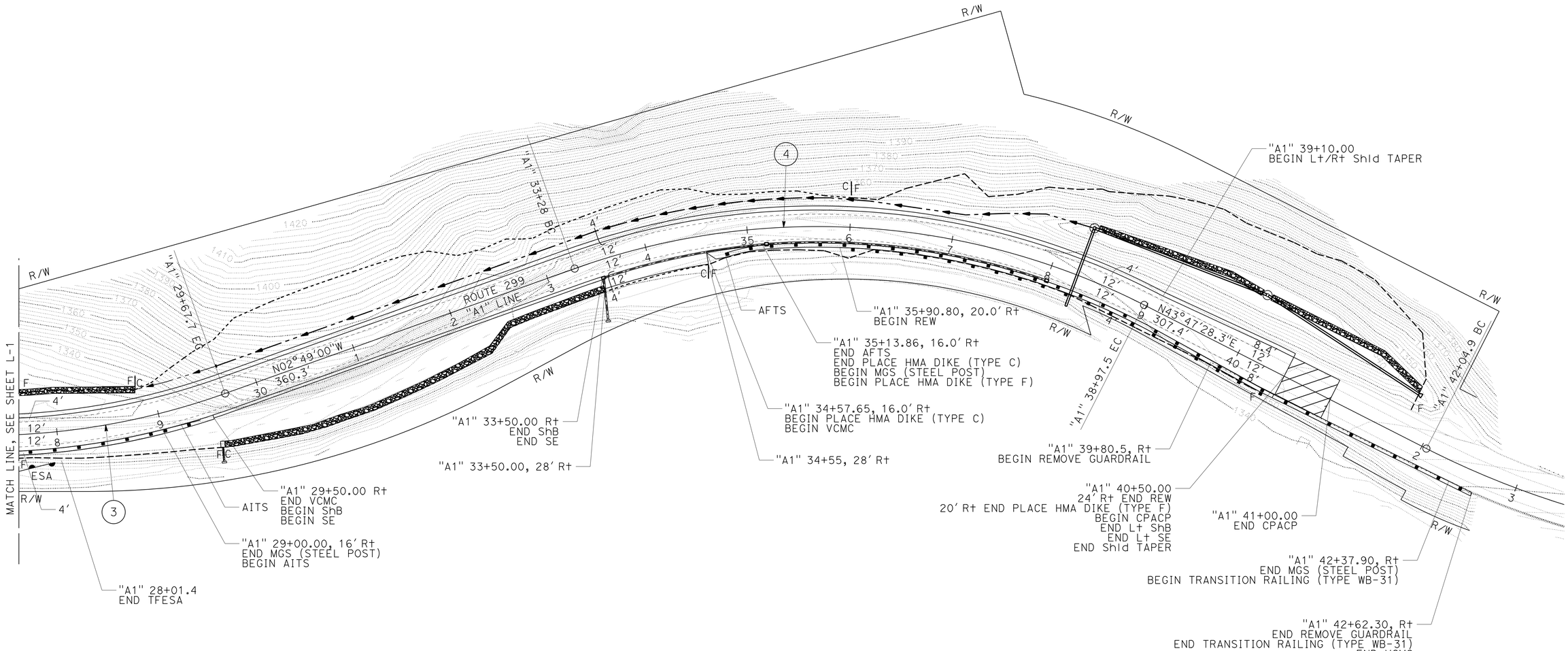

CURVE DATA

No. ⊕	R	Δ	T	L
3	700'	19°39'17"	121.25'	240.13'
4	700'	46°36'28"	301.52'	569.42'

LAYOUT

SCALE: 1" = 50' **L-2**

REVISED BY | DATE REVISED
BILL LEHMAN | SHAUN ALEXANDER
CALCULATED-DESIGNED BY | CHECKED BY
FUNCTIONAL SUPERVISOR
AL TRUJILLO

STATE OF CALIFORNIA - DEPARTMENT OF TRANSPORTATION
Caltrans
DESIGN

P:\proj1\02\4E890_plans\pse\24e890ea002.dgn

LAST REVISION 03-26-15 | DATE PLOTTED => 30-MAR-2015 | TIME PLOTTED => 09:28

Dist	COUNTY	ROUTE	POST MILES TOTAL PROJECT	SHEET No.	TOTAL SHEETS
02	Sha	299	47.5/48.1	5	64

Shaun Alexander 03-26-15
REGISTERED CIVIL ENGINEER DATE

03-26-15
PLANS APPROVAL DATE

REGISTERED PROFESSIONAL ENGINEER SHAUN ALEXANDER No. 70833 Exp. 6-30-15 STATE OF CALIFORNIA

THE STATE OF CALIFORNIA OR ITS OFFICERS OR AGENTS SHALL NOT BE RESPONSIBLE FOR THE ACCURACY OR COMPLETENESS OF ELECTRONIC COPIES OF THIS PLAN SHEET.

ABBREVIATIONS:

TW TRAVELED WAY

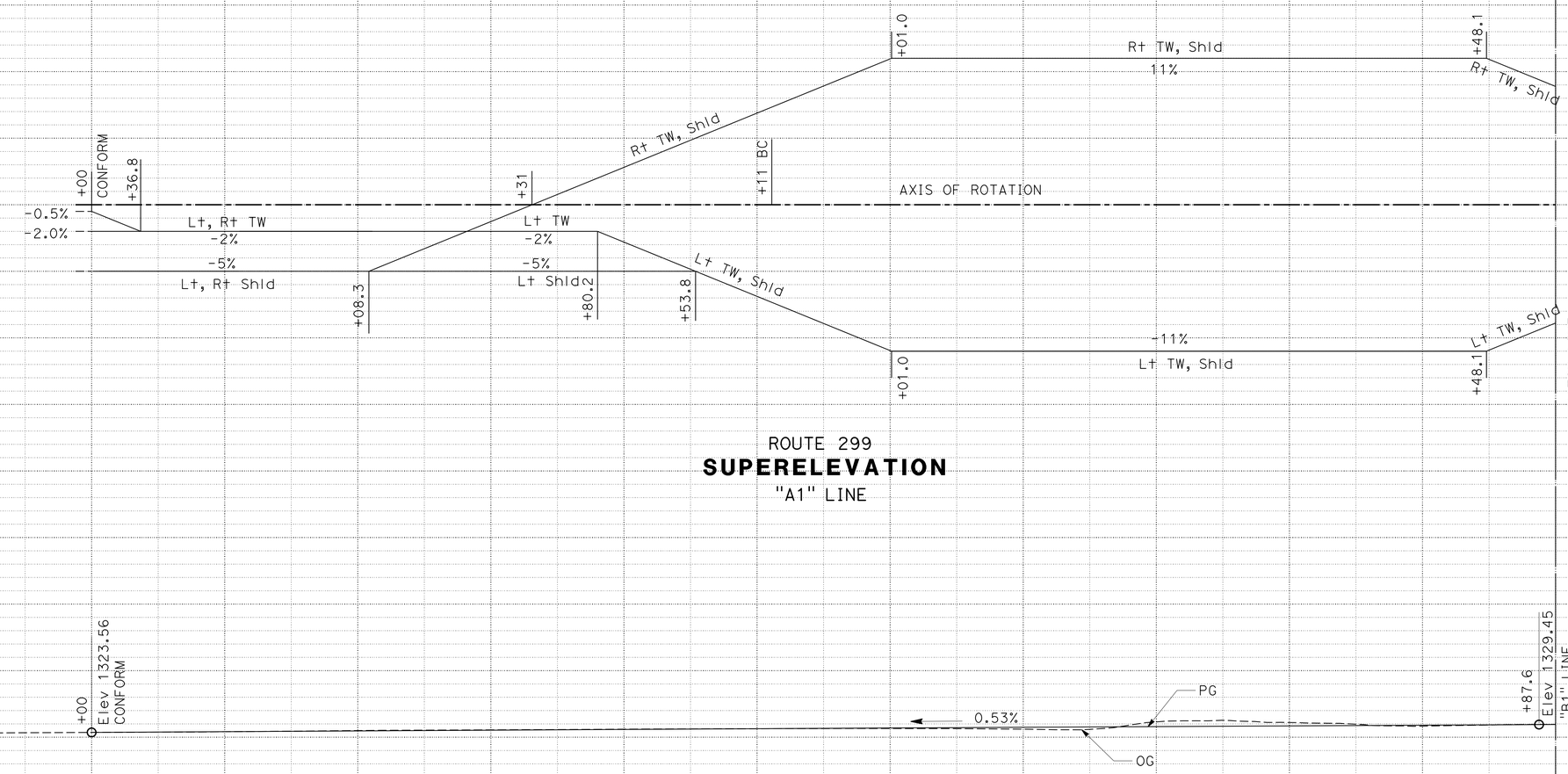

ROUTE 299
SUPERELEVATION
"A1" LINE

ROUTE 299
PROFILE
"A1" LINE

PROFILE AND SUPERELEVATION DIAGRAM

SCALE: 1" = 50' Horiz
1" = 50' Vert

PS-1

STATION	11+00	12+00	13+00	14+00	15+00	16+00	17+00	18+00	19+00	20+00	21+00	22+00	23+00	24+00	TOTAL
CY Exc							8,726								
CY Emb							2,758								

BILL LEHMAN — REVISED BY
SHAUN ALEXANDER — DATE REVISED
CALCULATED-DESIGNED BY
CHECKED BY
AL TRUJILLO — FUNCTIONAL SUPERVISOR

STATE OF CALIFORNIA - DEPARTMENT OF TRANSPORTATION
Caltrans **DESIGN**

P:\proj1\02\4E890_plans\pse\24e890fb001.dgn

DATE PLOTTED => 30-MAR-2015
TIME PLOTTED => 09:28
LAST REVISION 03-26-15

Dist	COUNTY	ROUTE	POST MILES TOTAL PROJECT	SHEET No.	TOTAL SHEETS
02	Sha	299	47.5/48.1	6	64

Shaun Alexander 03-26-15
REGISTERED CIVIL ENGINEER DATE

03-26-15
PLANS APPROVAL DATE

REGISTERED PROFESSIONAL ENGINEER SHAUN ALEXANDER No. 70833 Exp. 6-30-15 STATE OF CALIFORNIA

THE STATE OF CALIFORNIA OR ITS OFFICERS OR AGENTS SHALL NOT BE RESPONSIBLE FOR THE ACCURACY OR COMPLETENESS OF ELECTRONIC COPIES OF THIS PLAN SHEET.

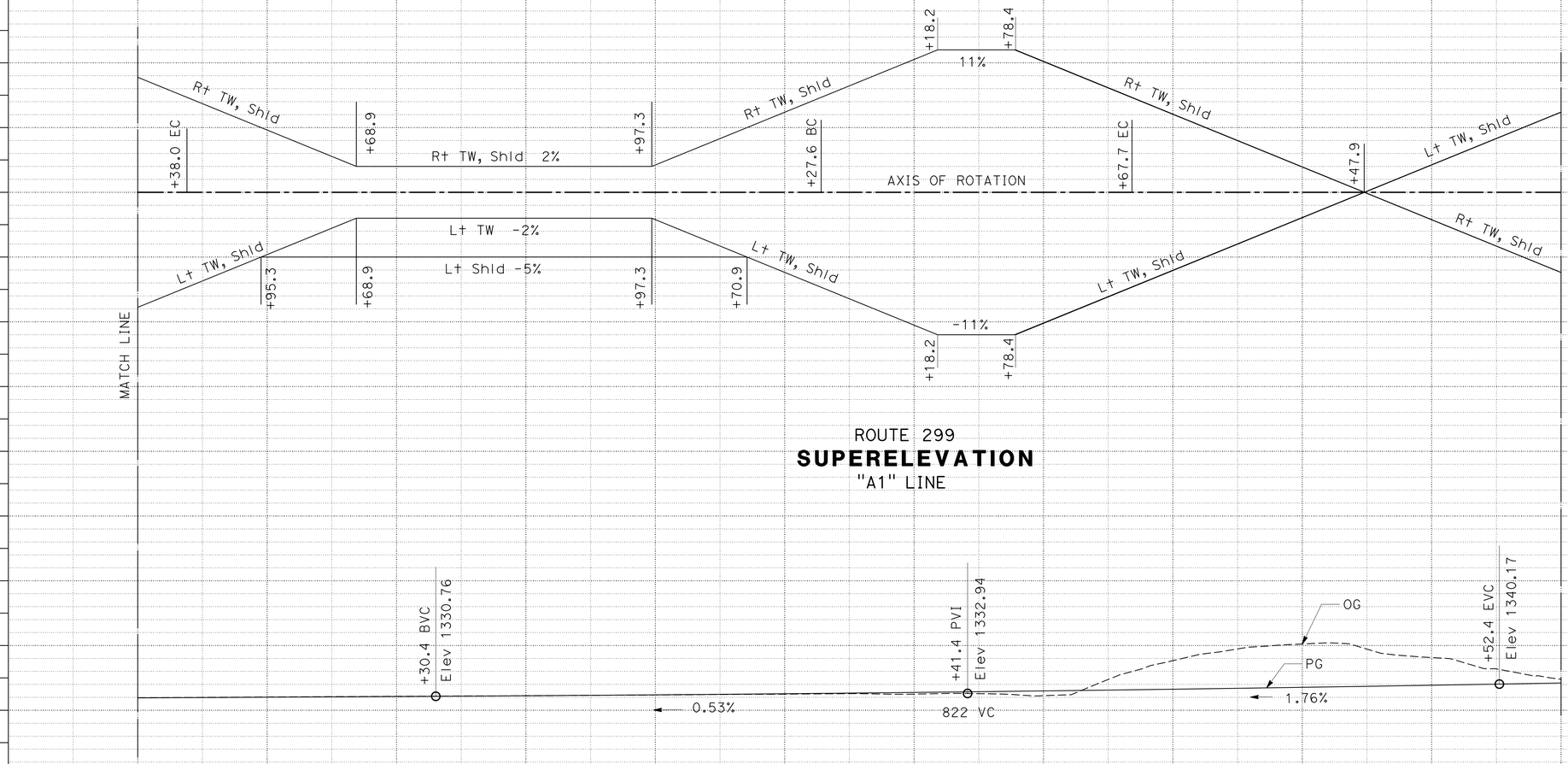

PROFILE AND SUPERELEVATION DIAGRAM

SCALE: 1" = 50 Horiz
1" = 50 Vert

PS-2

STATION	22+00	23+00	24+00	25+00	26+00	27+00	28+00	29+00	30+00	31+00	32+00	33+00	34+00	35+00	TOTAL
CY Exc	22,957														
CY Emb	1,227														

REVISED BY | DATE REVISED
BILL LEHMAN | SHAUN ALEXANDER
CALCULATED-DESIGNED BY | CHECKED BY
FUNCTIONAL SUPERVISOR: AL TRUJILLO

STATE OF CALIFORNIA - DEPARTMENT OF TRANSPORTATION
Caltrans **DESIGN**

P:\proj1\02\4E890_plans\pse\24e890fb002.dgn

LAST REVISION 03-26-15 | DATE PLOTTED => 30-MAR-2015 | TIME PLOTTED => 09:28

Dist	COUNTY	ROUTE	POST MILES TOTAL PROJECT	SHEET No.	TOTAL SHEETS
02	Sha	299	47.5/48.1	7	64

Shaun Alexander 03-26-15
REGISTERED CIVIL ENGINEER DATE

03-26-15
PLANS APPROVAL DATE

REGISTERED PROFESSIONAL ENGINEER
SHAUN ALEXANDER
No. 70833
Exp. 6-30-15
STATE OF CALIFORNIA

THE STATE OF CALIFORNIA OR ITS OFFICERS OR AGENTS SHALL NOT BE RESPONSIBLE FOR THE ACCURACY OR COMPLETENESS OF ELECTRONIC COPIES OF THIS PLAN SHEET.

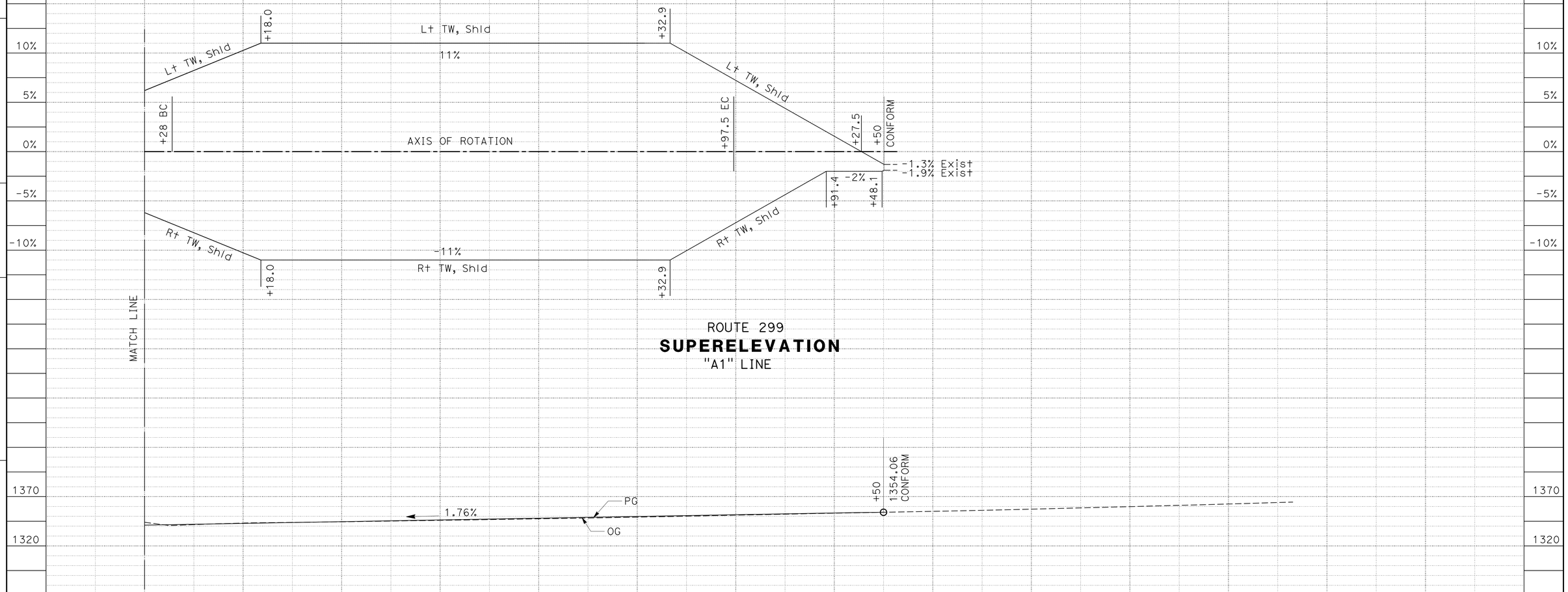

PROFILE AND SUPERELEVATION DIAGRAM

SCALE: 1" = 50' Horiz
1" = 50' Vert

PS-3

STATION		33+00	34+00	35+00	36+00	37+00	38+00	39+00	40+00	41+00	42+00	43+00	44+00	TOTAL
CY	Exc	2,656												34,339
	Emb	9,763												13,748

BILL LEHMAN — REVISED BY
SHAUN ALEXANDER — DATE REVISED
CALCULATED-DESIGNED BY
CHECKED BY
AL TRUJILLO — FUNCTIONAL SUPERVISOR

STATE OF CALIFORNIA - DEPARTMENT OF TRANSPORTATION
Caltrans
DESIGN

P:\proj1\02\4E890_plans\pse\24e890fb003.dgn

DATE PLOTTED => 30-MAR-2015
TIME PLOTTED => 09:28
LAST REVISION 03-26-15

Dist	COUNTY	ROUTE	POST MILES TOTAL PROJECT	SHEET No.	TOTAL SHEETS
02	Sha	299	47.5/48.1	8	64

Shaun Alexander 03-26-15
REGISTERED CIVIL ENGINEER DATE

03-26-15
PLANS APPROVAL DATE

REGISTERED PROFESSIONAL ENGINEER SHAUN ALEXANDER No. 70833 Exp. 6-30-15 STATE OF CALIFORNIA

THE STATE OF CALIFORNIA OR ITS OFFICERS OR AGENTS SHALL NOT BE RESPONSIBLE FOR THE ACCURACY OR COMPLETENESS OF ELECTRONIC COPIES OF THIS PLAN SHEET.

ABBREVIATIONS;

CPACP	COLD PLANE ASPHALT CONCRETE PAVEMENT
ShB	SHOULDER BACKING
SE	SAFETY EDGE
TCE	TEMPORARY CONSTRUCTION EASEMENT
AITS	ALTERNATIVE IN-LINE TERMINAL SYSTEM
REW	RAIL ELEMENT WALL
AFTS	ALTERNATIVE FLARED TERMINAL SYSTEM
VCMC	VEGETATION CONTROL (MINOR CONCRETE)
MGS	MIDWEST GUARDRAIL SYSTEM

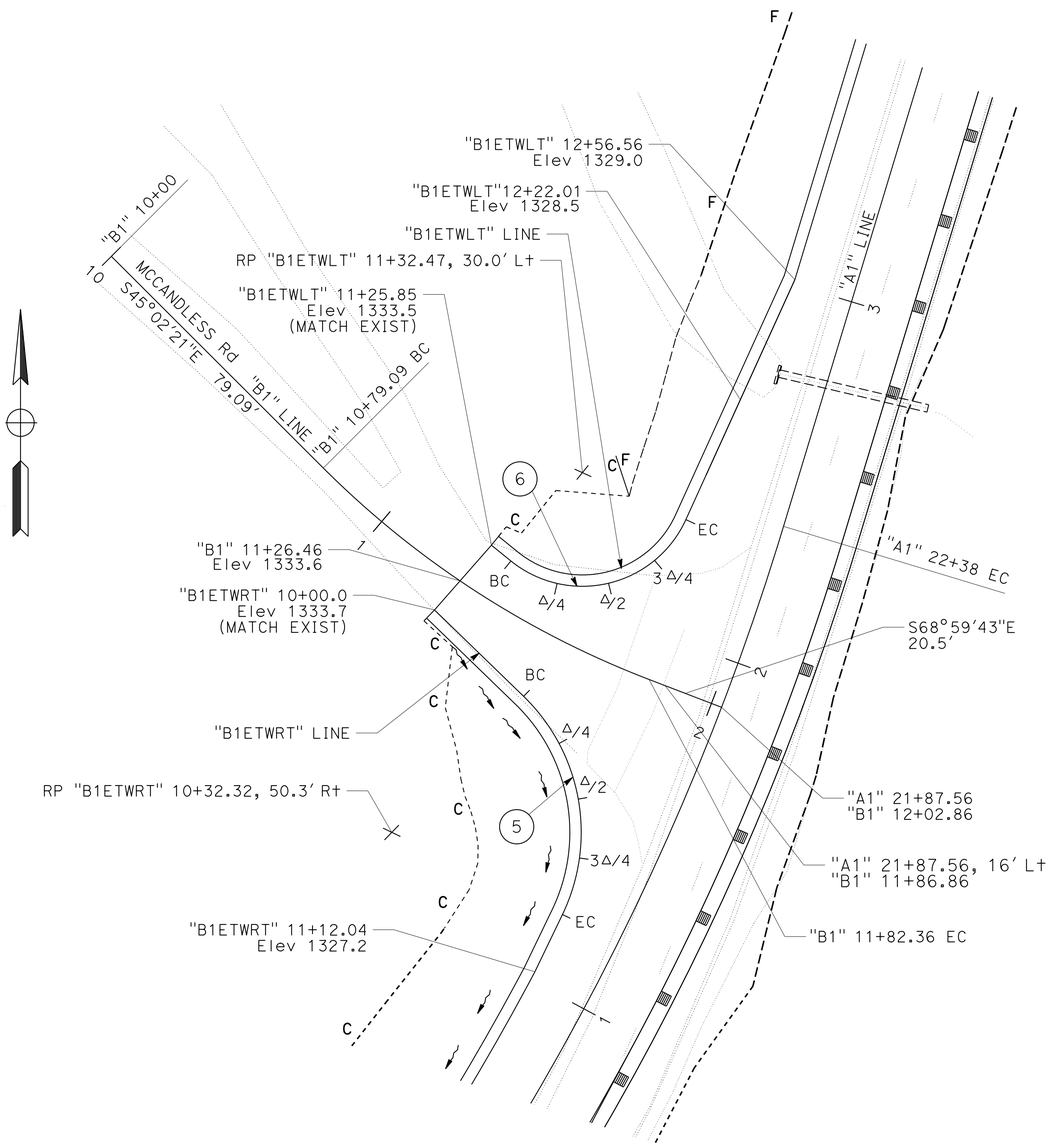

McCANDLESS ROAD
SCALE: 1" = 20'

"B1ETWLT" LINE - EDGE OF PAVEMENT

INTERVAL	Sta	Elev
BC	11+32.47	1332.5
Δ/4	11+46.16	1329.9
Δ/2	11+59.85	1327.6
3Δ/4	11+73.53	1327.9
EC	11+87.22	1328.1

"B1ETWRT" LINE - EDGE OF PAVEMENT

INTERVAL	Sta	Elev
BC	10+32.77	1328.9
Δ/4	10+48.39	1327.2
Δ/2	10+64.02	1327.0
3Δ/4	10+79.64	1327.1
EC	10+95.26	1327.3

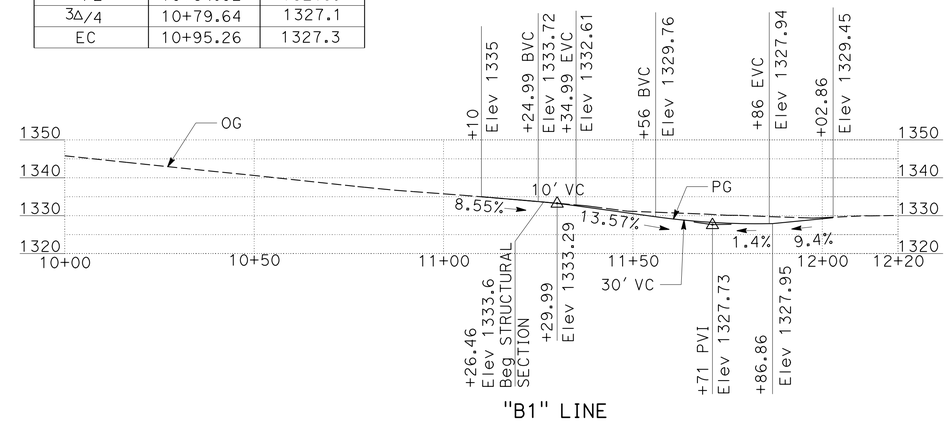

"B1" LINE
PROFILE
SCALE: 1" = 20' Horiz
1" = 20' Vert

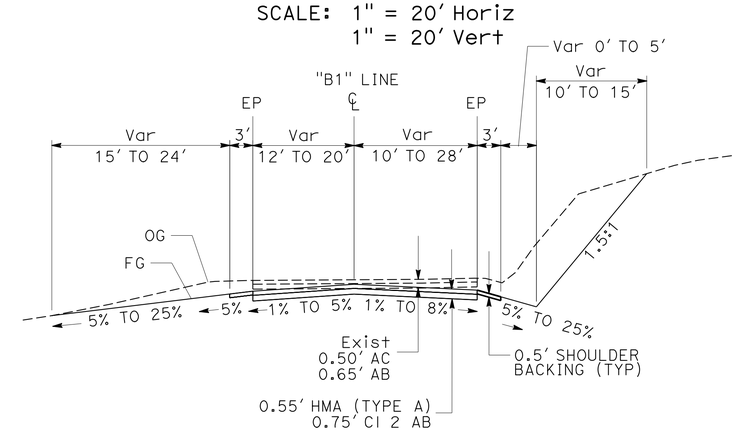

TYPICAL PROFILE
"B1" 11+26.7 TO 11+86.9
SCALE: 1" = 10'

CURVE DATA

No. ⊕	R	Δ	T	L
5	50'	71°36'47"	36.07'	62.49'
6	30'	104°33'59"	38.79'	54.75'

CONSTRUCTION DETAILS
SCALE: AS SHOWN

C-1

REVISED BY	DATE REVISED
BILL LEHMAN	SHAUN ALEXANDER

CALCULATED-DESIGNED BY
CHECKED BY

FUNCTIONAL SUPERVISOR: AL TRUJILLO

STATE OF CALIFORNIA - DEPARTMENT OF TRANSPORTATION
Caltrans DESIGN

P:\proj1\02\4E890_plans\pse\24e890ga001.dgn

LAST REVISION 03-26-15
DATE PLOTTED => 30-MAR-2015
TIME PLOTTED => 09:28

Dist	COUNTY	ROUTE	POST MILES TOTAL PROJECT	SHEET No.	TOTAL SHEETS
02	Sha	299	47.5/48.1	9	64

Shaun Alexander 03-26-15
REGISTERED CIVIL ENGINEER DATE

03-26-15
PLANS APPROVAL DATE

REGISTERED PROFESSIONAL ENGINEER SHAUN ALEXANDER No. 70833 Exp. 6-30-15 STATE OF CALIFORNIA

THE STATE OF CALIFORNIA OR ITS OFFICERS OR AGENTS SHALL NOT BE RESPONSIBLE FOR THE ACCURACY OR COMPLETENESS OF ELECTRONIC COPIES OF THIS PLAN SHEET.

NOTES:

1. FOR CURB AND DIKE DETAILS, SEE REVISED STANDARD PLANS RSP A87A. AND RSP A87B.
2. ONLY TYPE C DIKE MAY BE USED UNDER OR IN FRONT OF TERMINAL SYSTEMS, OR WHEN DIKE IS PLACED MORE THAN 2" IN FRONT OF FACE OF MBGR, OR MORE THAN 7" IN FRONT OF FACE OF MGS.
3. DIKE OR CURB MUST BE PLACED IN THE STD POSITION UNLESS OTHERWISE SHOWN. THE MAXIMUM HEIGHT OF THE DIKE OR CURB SHALL BE 4" FOR MBGR, AND 6" FOR MGS. 6" MOUNTABLE DIKE SHOULD NOT BE USED UNDER GUARDRAIL.
4. DIKE OR CURB MAY BE PLACED UP TO 7" IN FRONT OF FACE OF MGS WHERE SHOWN ON PROJECT PLANS OR AUTHORIZED BY THE ENGINEER.

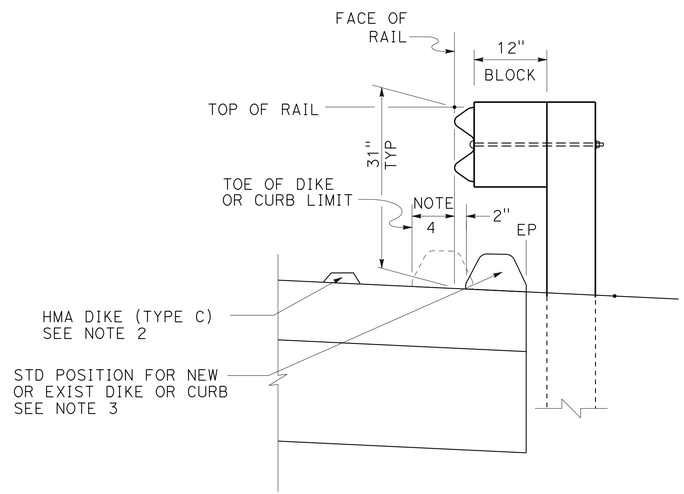

MGS DIKE POSITIONING

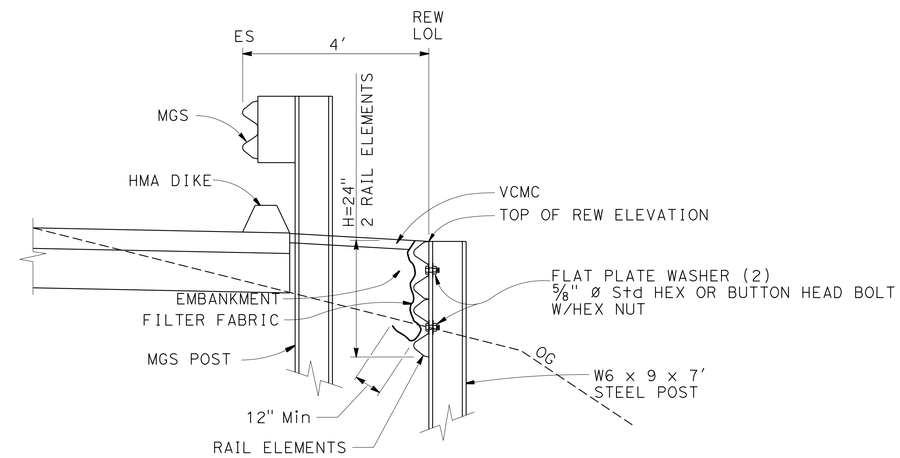

SECTION A-A

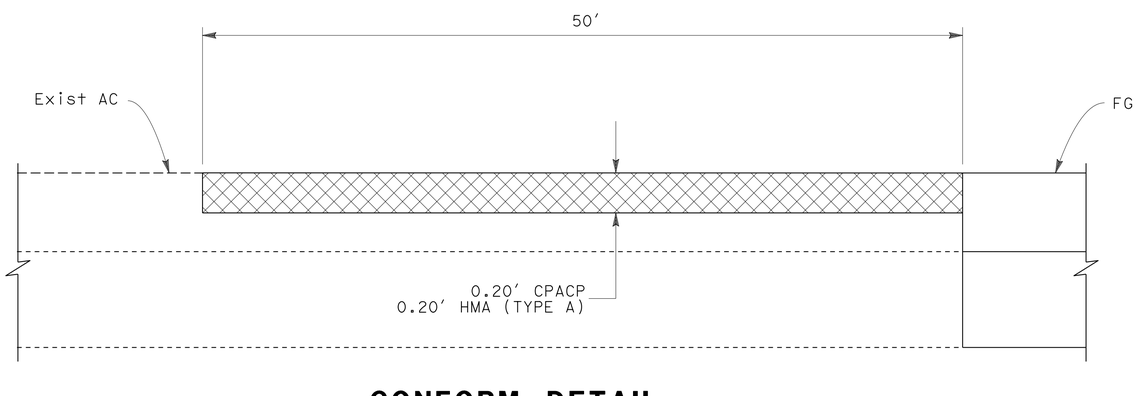

CONFORM DETAIL
"A1" 10+50 TO "A1" 11+00
"A1" 40+50 TO "A1" 41+00

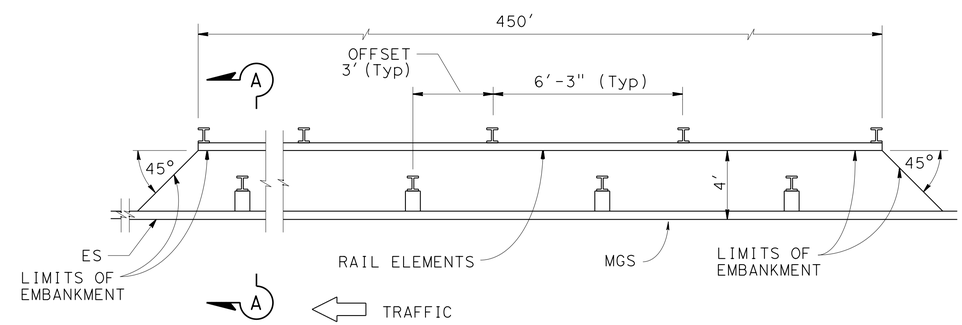

PLAN
RAIL ELEMENT WALL
"A1" 35+90.8 TO 40+50

CONSTRUCTION DETAILS

NO SCALE

C-2

REVISED BY	DATE REVISED

CALCULATED-DESIGNED BY	BILL LEHMAN
CHECKED BY	SHAUN ALEXANDER
FUNCTIONAL SUPERVISOR	AL TRUJILLO

STATE OF CALIFORNIA - DEPARTMENT OF TRANSPORTATION
Caltrans **DESIGN**

P:\proj1\02\4E890_plans\pse\24e890ga002.dgn

LAST REVISION DATE PLOTTED => 30-MAR-2015
03-26-15 TIME PLOTTED => 09:28

Dist	COUNTY	ROUTE	POST MILES TOTAL PROJECT	SHEET No.	TOTAL SHEETS
02	Sha	299	47.5/48.1	10	64

Shaun Alexander 03-26-15
REGISTERED CIVIL ENGINEER DATE

03-26-15
PLANS APPROVAL DATE

REGISTERED PROFESSIONAL ENGINEER SHAUN ALEXANDER No. 70833 Exp. 6-30-15 STATE OF CALIFORNIA

THE STATE OF CALIFORNIA OR ITS OFFICERS OR AGENTS SHALL NOT BE RESPONSIBLE FOR THE ACCURACY OR COMPLETENESS OF ELECTRONIC COPIES OF THIS PLAN SHEET.

NOTES:

1. SEE Std PLAN A77L2 FOR 6' STEEL POST DETAILS NOT SHOWN ON THIS PLAN.
2. CRT POST SHALL BE WOOD.
3. SPLICE LOCATION OF MGS WILL NOT EFFECT SPAN.
4. GUARDRAIL ELEMENTS TO BE STANDARD 12'-6" LENGTH BETWEEN SPLICES.
5. IF MORE THAN ONE POST IS SKIPPED, THE USE OF THIS DETAIL REQURIES A MINIMUM LENGTH OF 50' OF STANDARD GUARDRAIL BEFORE; ANOTHER POST CAN BE SKIPPED, A TERMINAL CAN BE PLACED, OR ANY SPECIAL GUARDRAIL FEATURE IS USED.

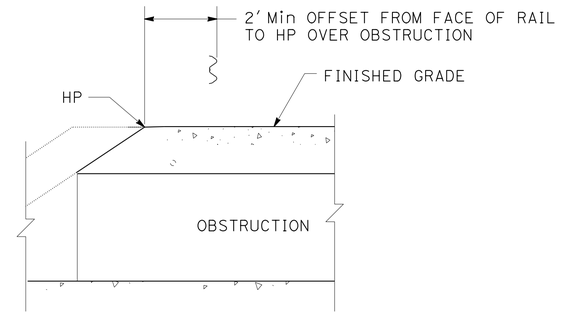

SECTION A-A

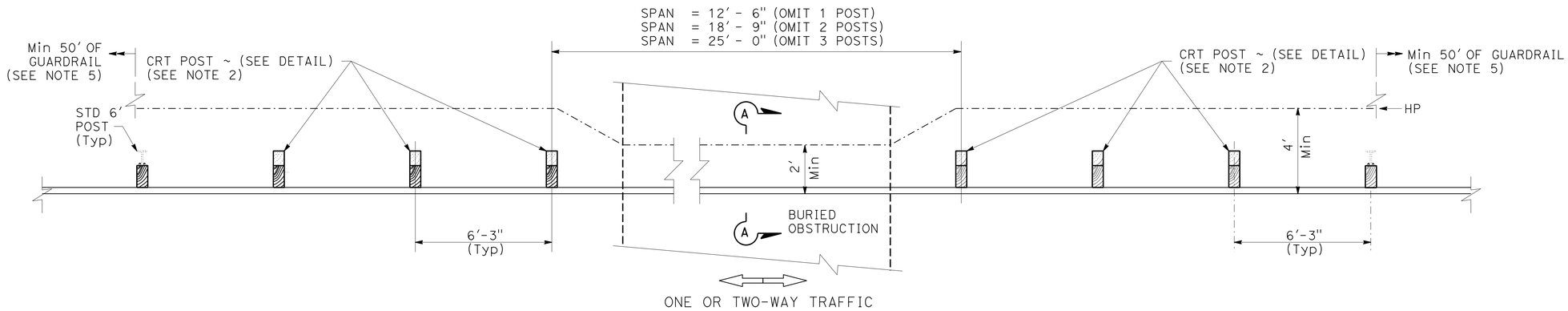

PLAN

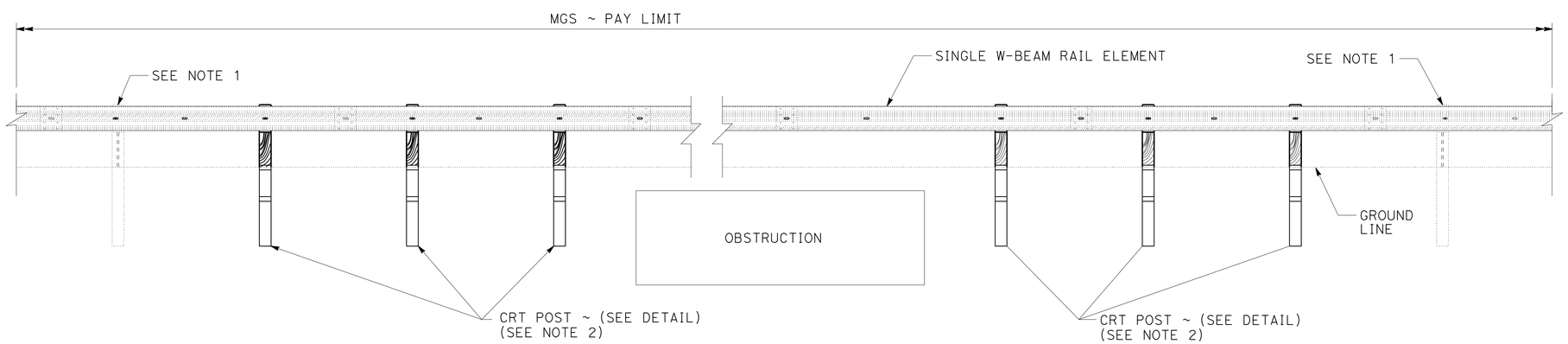

ELEVATION
SEE NOTE 5

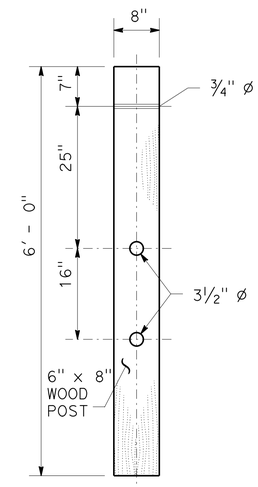

CONTROLLED RELEASING TERMINAL (CRT) POST DETAIL
SEE NOTE 2

MIDWEST GUARDRAIL SYSTEM OMIT 1 TO 3 POSTS

CONSTRUCTION DETAILS
NO SCALE

C-3

REVISED BY | DATE REVISED
BILL LEHMAN | SHAUN ALEXANDER
CALCULATED-DESIGNED BY | CHECKED BY
FUNCTIONAL SUPERVISOR: AL TRUJILLO
STATE OF CALIFORNIA - DEPARTMENT OF TRANSPORTATION
Caltrans DESIGN
P:\proj1\02\4E890_plans\pse\24e890ga003.dgn

LAST REVISION 03-26-15 | DATE PLOTTED => 30-MAR-2015 | TIME PLOTTED => 09:28

Dist	COUNTY	ROUTE	POST MILES TOTAL PROJECT	SHEET No.	TOTAL SHEETS
02	Sha	299	47.5/48.1	11	64

Shaun Alexander 03-26-15
REGISTERED CIVIL ENGINEER DATE

03-26-15
PLANS APPROVAL DATE

REGISTERED PROFESSIONAL ENGINEER
SHAUN ALEXANDER
No. 70833
Exp. 6-30-15
STATE OF CALIFORNIA

THE STATE OF CALIFORNIA OR ITS OFFICERS OR AGENTS SHALL NOT BE RESPONSIBLE FOR THE ACCURACY OR COMPLETENESS OF ELECTRONIC COPIES OF THIS PLAN SHEET.

NOTES:

1. GRIND EXISTING SURFACES TO ACCOMMODATE A MINIMUM TAPER THICKNESS OF 0.10′ WHEN EITHER:
   A. HMA MATERIAL SUCH AS RUBBERIZED, POLYMER MODIFIED OR OPEN GRADED IS UNSUITABLE FOR RAKING TO A MAXIMUM 0.02′ THICKNESS AT THE CONFORM.
   B. TEMPORARY TAPER WILL BE IN PLACE FOR MORE THAN 14 DAYS.
2. PERMANENT SURFACE MAY BE EXISTING OR NEW PAVEMENT.
3. ROADWAY SURFACE IS THE TOP OF EXISTING SURFACE OR THE TOP OF THE PLANED SURFACE.
4. IF AUTHORIZED, YOU MAY USE ALTERNATIVE MATERIALS OR METHODS TO PRODUCE THE REQUIRED TAPER.

LEGEND:

HMA MATERIAL (TEMPORARY TAPER)

IF NECESSARY, COLD PLANE ASPHALT CONCRETE PAVEMENT AND PLACE HMA MATERIAL (SEE NOTE 1)

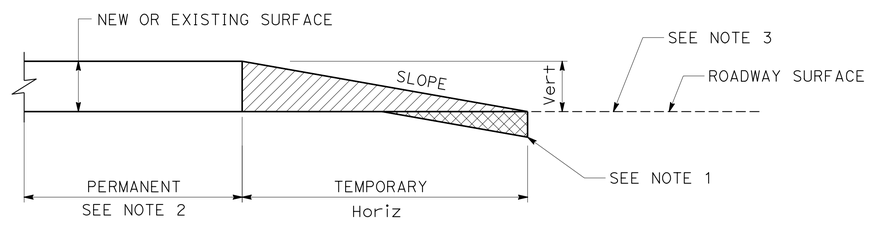

Vert	SLOPE RATIO Horiz/Vert
0-0.10′	70:1
GREATER THAN 0.10′	160:1

TYPICAL PAVING CONFORM FOR TEMPORARY CONSTRUCTION TAPERS

CONSTRUCTION DETAILS
NO SCALE

C-4

REVISED BY | DATE REVISED
BILL LEHMAN | SHAUN ALEXANDER
CALCULATED-DESIGNED BY | CHECKED BY
FUNCTIONAL SUPERVISOR
AL TRUJILLO

STATE OF CALIFORNIA - DEPARTMENT OF TRANSPORTATION
Caltrans DESIGN

P:\proj1\02\4E890_plans\pse\24e890ga004.dgn

LAST REVISION 03-26-15 | DATE PLOTTED => 30-MAR-2015 | TIME PLOTTED => 09:28

Dist	COUNTY	ROUTE	POST MILES TOTAL PROJECT	SHEET No.	TOTAL SHEETS
02	Sha	299	47.5/48.1	12	64

Shaun Alexander 03-26-15
REGISTERED CIVIL ENGINEER DATE

03-26-15
PLANS APPROVAL DATE

REGISTERED PROFESSIONAL ENGINEER SHAUN ALEXANDER No. 70833 Exp. 6-30-15 STATE OF CALIFORNIA

THE STATE OF CALIFORNIA OR ITS OFFICERS OR AGENTS SHALL NOT BE RESPONSIBLE FOR THE ACCURACY OR COMPLETENESS OF ELECTRONIC COPIES OF THIS PLAN SHEET.

ABBREVIATIONS;

CPACP	COLD PLANE ASPHALT CONCRETE PAVEMENT
ShB	SHOULDER BACKING
SE	SAFETY EDGE
AITS	ALTERNATIVE IN-LINE TERMINAL SYSTEM
ERS	EARTH RETAINING SYSTEM (RAILING COMPONENTS)
AFTS	ALTERNATIVE FLARED TERMINAL SYSTEM
VCMC	VEGETATION CONTROL (MINOR CONCRETE)
MGS	MIDWEST GUARDRAIL SYSTEM
(E)	EXISTING

NOTE:

1. FOR ACCURATE RIGHT OF WAY DATA, CONTACT RIGHT OF WAY ENGINEERING AT THE DISTRICT OFFICE.

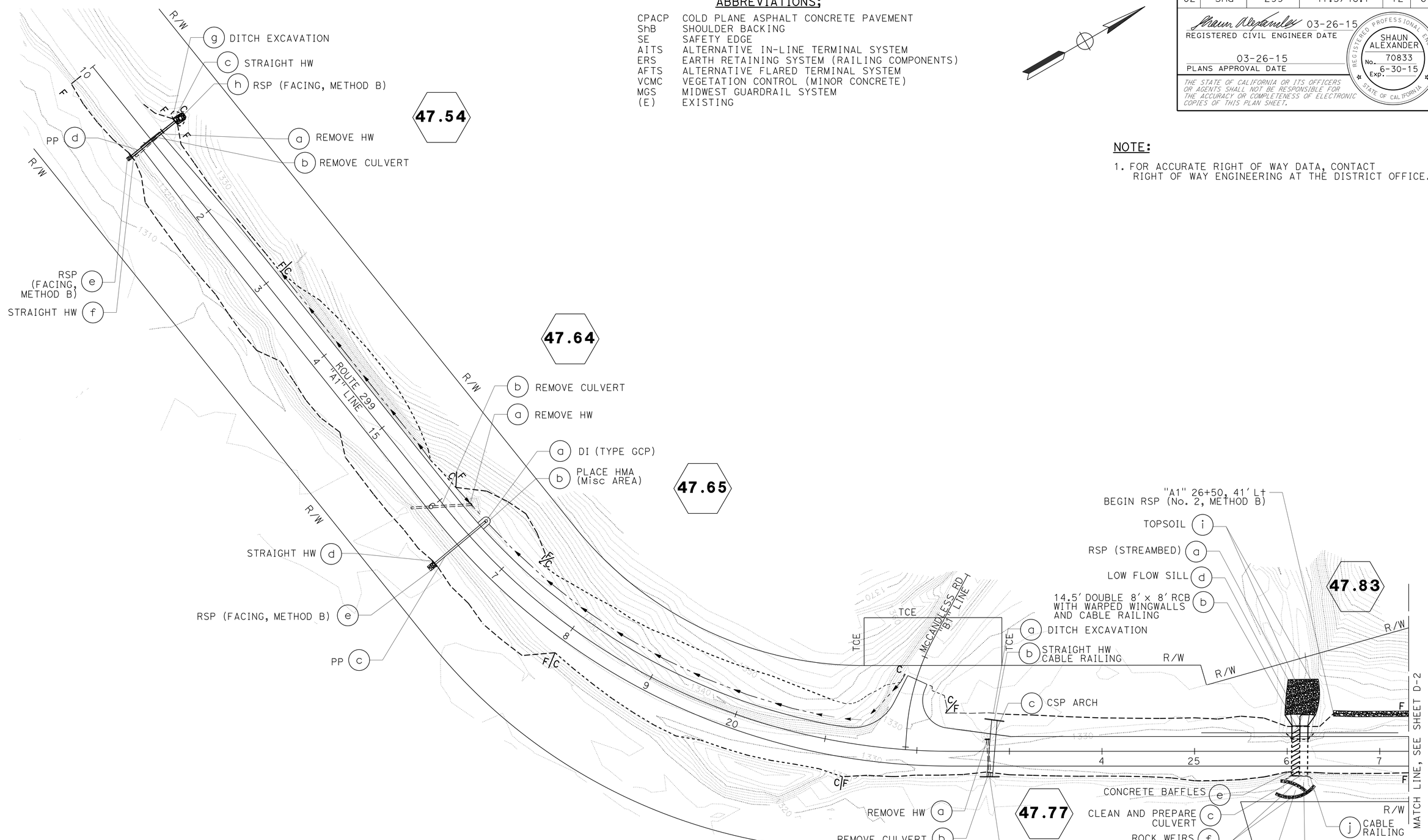

DRAINAGE PLAN

SCALE: 1" = 50'

D-1

APPROVED FOR DRAINAGE WORK ONLY

REVISED BY	DATE REVISED

CALCULATED-DESIGNED BY	CHECKED BY
BILL LEHMAN	SHAUN ALEXANDER

FUNCTIONAL SUPERVISOR: AL TRUJILLO

STATE OF CALIFORNIA - DEPARTMENT OF TRANSPORTATION
Caltrans DESIGN

P:\proj1\02\4E890_plans\pse\24e890ia001.dgn

LAST REVISION DATE PLOTTED => 30-MAR-2015
TIME PLOTTED => 09:28
03-26-15

Dist	COUNTY	ROUTE	POST MILES TOTAL PROJECT	SHEET No.	TOTAL SHEETS
02	Sha	299	47.5/48.1	13	64

Shaun Alexander 03-26-15
REGISTERED CIVIL ENGINEER DATE

03-26-15
PLANS APPROVAL DATE

REGISTERED PROFESSIONAL ENGINEER SHAUN ALEXANDER No. 70833 Exp. 6-30-15 STATE OF CALIFORNIA

THE STATE OF CALIFORNIA OR ITS OFFICERS OR AGENTS SHALL NOT BE RESPONSIBLE FOR THE ACCURACY OR COMPLETENESS OF ELECTRONIC COPIES OF THIS PLAN SHEET.

NOTE:

1. FOR ACCURATE RIGHT OF WAY DATA, CONTACT RIGHT OF WAY ENGINEERING AT THE DISTRICT OFFICE.

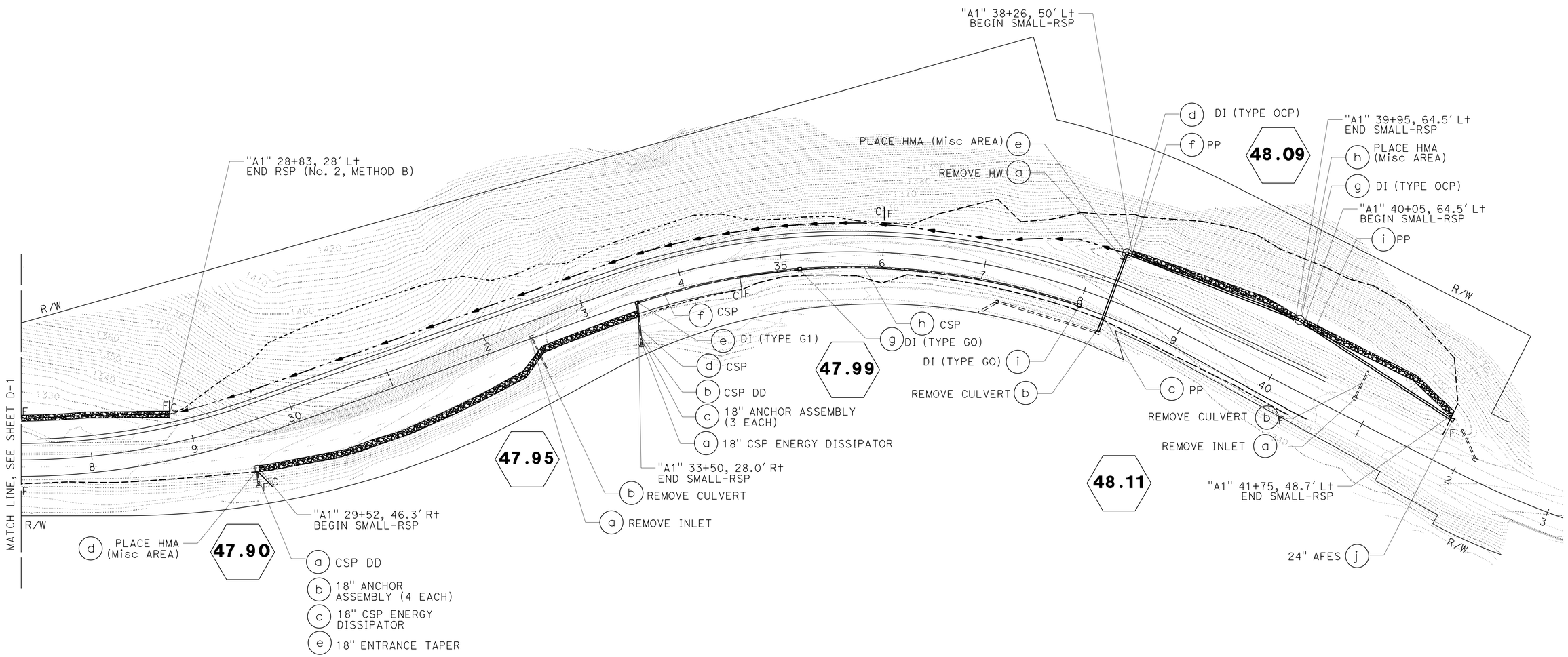

DRAINAGE PLAN

SCALE: 1" = 50'

D-2

APPROVED FOR DRAINAGE WORK ONLY

REVISED BY	DATE REVISED
BILL LEHMAN	SHAUN ALEXANDER

CALCULATED-DESIGNED BY
CHECKED BY

FUNCTIONAL SUPERVISOR: AL TRUJILLO

STATE OF CALIFORNIA - DEPARTMENT OF TRANSPORTATION
Caltrans
DESIGN

P:\proj1\02\4E890_plans\pse\24e890ia002.dgn

LAST REVISION 03-26-15 | DATE PLOTTED => 30-MAR-2015 | TIME PLOTTED => 09:28

Dist	COUNTY	ROUTE	POST MILES TOTAL PROJECT	SHEET No.	TOTAL SHEETS
02	Sha	299	47.5/48.1	14	64

Shaun Alexander 03-26-15
REGISTERED CIVIL ENGINEER DATE

03-26-15
PLANS APPROVAL DATE

REGISTERED PROFESSIONAL ENGINEER
SHAUN ALEXANDER
No. 70833
Exp. 6-30-15
STATE OF CALIFORNIA

THE STATE OF CALIFORNIA OR ITS OFFICERS OR AGENTS SHALL NOT BE RESPONSIBLE FOR THE ACCURACY OR COMPLETENESS OF ELECTRONIC COPIES OF THIS PLAN SHEET.

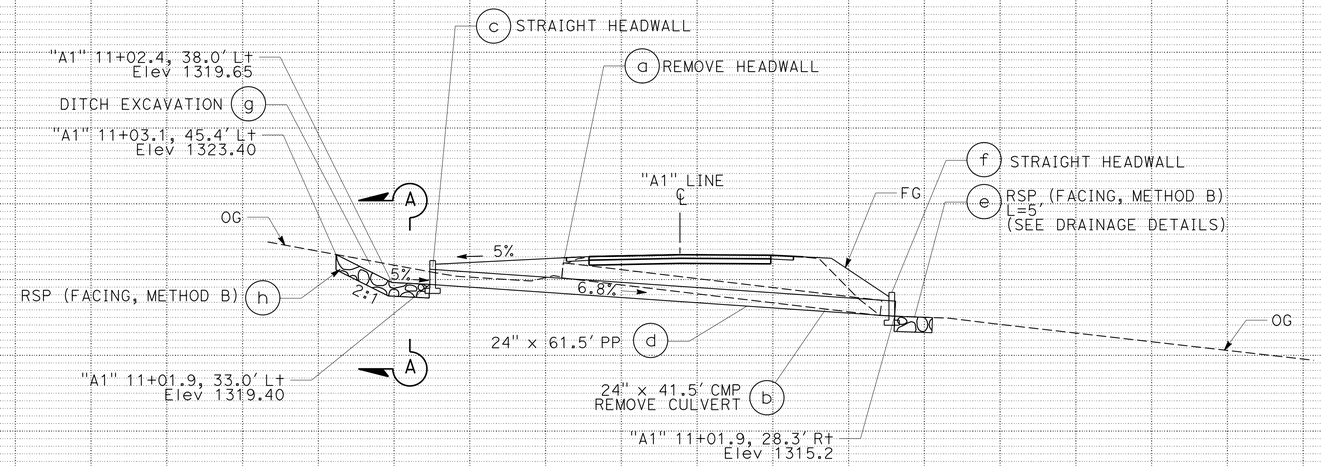

DRAINAGE SYSTEM 47.54
"A1" 11+02

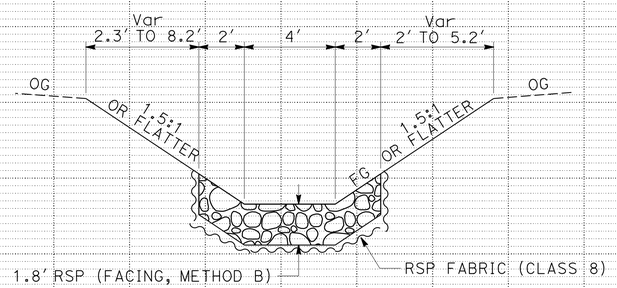

SECTION A-A
NO SCALE

DRAINAGE PROFILES

SCALE: 1" = 10' Horiz
1" = 10' Vert

DP-1

REVISED BY | DATE REVISED
BILL LEHMAN | SHAUN ALEXANDER
CALCULATED-DESIGNED BY | CHECKED BY
FUNCTIONAL SUPERVISOR
AL TRUJILLO

STATE OF CALIFORNIA - DEPARTMENT OF TRANSPORTATION
Caltrans
DESIGN

P:\proj1\02\4E890_plans\pse\24e890ib001.dgn

LAST REVISION 03-26-15 | DATE PLOTTED => 30-MAR-2015 | TIME PLOTTED => 09:28

Dist	COUNTY	ROUTE	POST MILES TOTAL PROJECT	SHEET No.	TOTAL SHEETS
02	Sha	299	47.5/48.1	15	64

Shaun Alexander 03-26-15
REGISTERED CIVIL ENGINEER DATE

03-26-15
PLANS APPROVAL DATE

REGISTERED PROFESSIONAL ENGINEER SHAUN ALEXANDER No. 70833 Exp. 6-30-15 STATE OF CALIFORNIA

THE STATE OF CALIFORNIA OR ITS OFFICERS OR AGENTS SHALL NOT BE RESPONSIBLE FOR THE ACCURACY OR COMPLETENESS OF ELECTRONIC COPIES OF THIS PLAN SHEET.

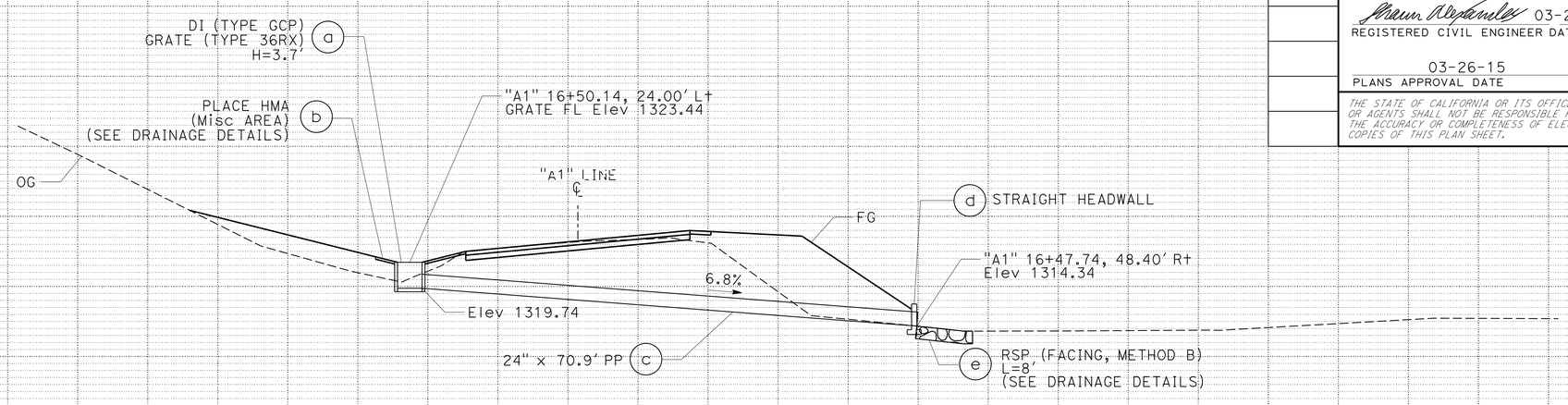

DRAINAGE SYSTEM 47.65

"A1" 16+49.31

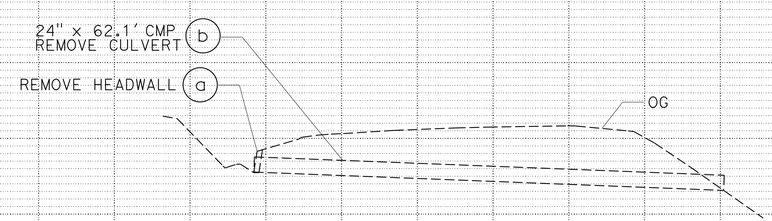

DRAINAGE SYSTEM 47.64

"A1" 16+08.02

DRAINAGE PROFILES

SCALE: 1" = 10' Horiz
1" = 10' Vert

DP-2

REVISED BY | DATE REVISED
BILL LEHMAN | SHAUN ALEXANDER
CALCULATED-DESIGNED BY | CHECKED BY
FUNCTIONAL SUPERVISOR: AL TRUJILLO

STATE OF CALIFORNIA - DEPARTMENT OF TRANSPORTATION
Caltrans **DESIGN**

P:\proj1\02\4E890_plans\pse\24e890ib002.dgn

LAST REVISION 03-26-15 | DATE PLOTTED => 30-MAR-2015 | TIME PLOTTED => 09:28

Dist	COUNTY	ROUTE	POST MILES TOTAL PROJECT	SHEET No.	TOTAL SHEETS
02	Sha	299	47.5/48.1	16	64

Shaun Alexander 03-26-15
REGISTERED CIVIL ENGINEER DATE

03-26-15
PLANS APPROVAL DATE

REGISTERED PROFESSIONAL ENGINEER SHAUN ALEXANDER No. 70833 Exp. 6-30-15 STATE OF CALIFORNIA

THE STATE OF CALIFORNIA OR ITS OFFICERS OR AGENTS SHALL NOT BE RESPONSIBLE FOR THE ACCURACY OR COMPLETENESS OF ELECTRONIC COPIES OF THIS PLAN SHEET.

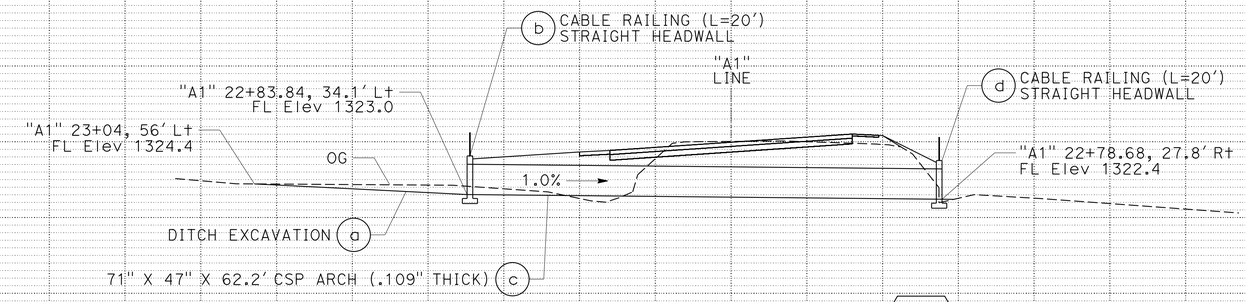

DRAINAGE SYSTEM 47.77
"A1" 22+81.00

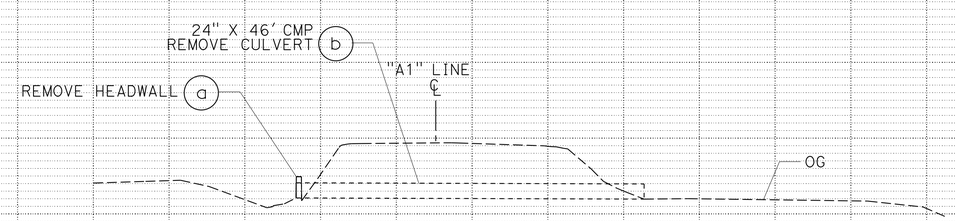

DRAINAGE SYSTEM 47.76
"A1" 22+77.15

DRAINAGE PROFILES

SCALE: 1" = 10' Horiz
1" = 10' Vert

DP-3

REVISED BY | DATE REVISED
BILL LEHMAN | SHAUN ALEXANDER
CALCULATED-DESIGNED BY | CHECKED BY
FUNCTIONAL SUPERVISOR
AL TRUJILLO

STATE OF CALIFORNIA - DEPARTMENT OF TRANSPORTATION
Caltrans **DESIGN**

P:\proj1\02\4E890_plans\pse\24e890ib003.dgn

LAST REVISION 03-26-15 | DATE PLOTTED => 30-MAR-2015 | TIME PLOTTED => 09:28

Dist	COUNTY	ROUTE	POST MILES TOTAL PROJECT	SHEET No.	TOTAL SHEETS
02	Sha	299	47.5/48.1	17	64

Shaun Alexander 03-26-15
REGISTERED CIVIL ENGINEER DATE

03-26-15
PLANS APPROVAL DATE

REGISTERED PROFESSIONAL ENGINEER SHAUN ALEXANDER No. 70833 Exp. 6-30-15 STATE OF CALIFORNIA

THE STATE OF CALIFORNIA OR ITS OFFICERS OR AGENTS SHALL NOT BE RESPONSIBLE FOR THE ACCURACY OR COMPLETENESS OF ELECTRONIC COPIES OF THIS PLAN SHEET.

NOTE:

1. 18" ENTRANCE TAPER SHALL HAVE A 2' TAIL PIPE.

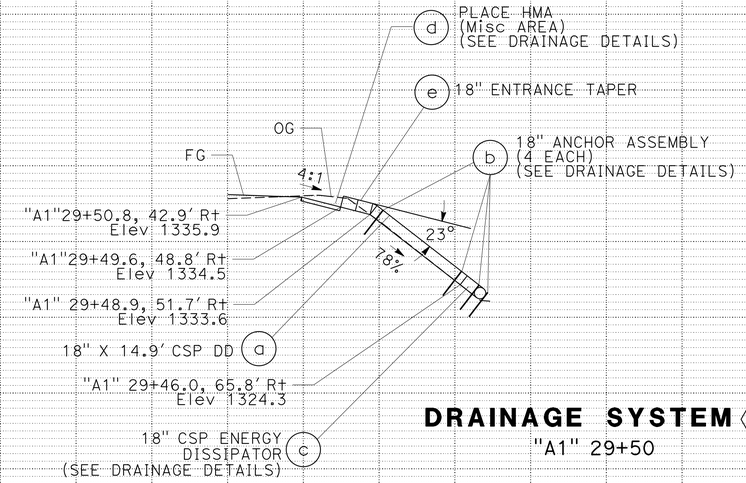

DRAINAGE SYSTEM 47.90
"A1" 29+50

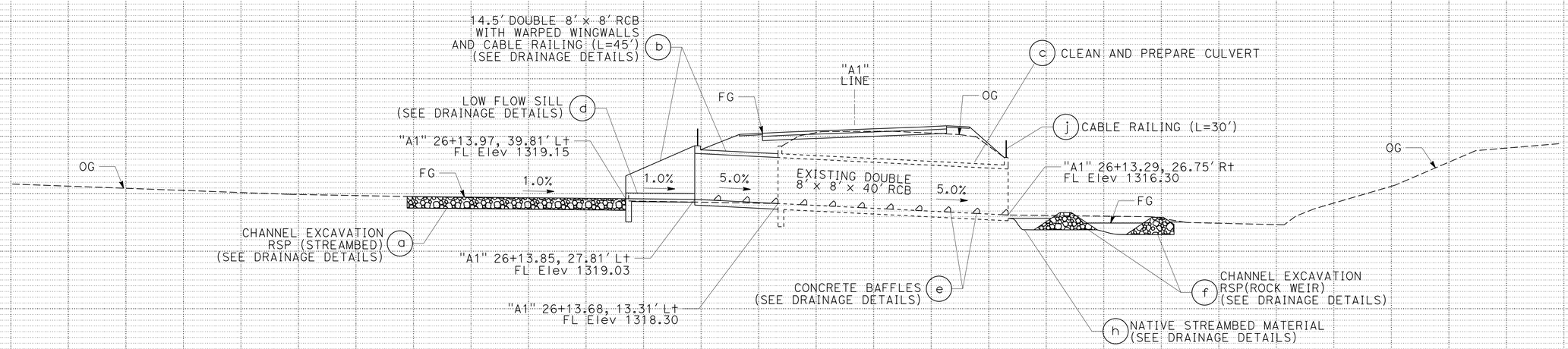

DRAINAGE SYSTEM 47.83
"A1" 26+14

DRAINAGE PROFILES

SCALE: 1" = 10' Horiz
1" = 10' Vert

DP-4

REVISED BY | DATE REVISED
BILL LEHMAN | SHAUN ALEXANDER
CALCULATED-DESIGNED BY | CHECKED BY
FUNCTIONAL SUPERVISOR: AL TRUJILLO

STATE OF CALIFORNIA - DEPARTMENT OF TRANSPORTATION
Caltrans **DESIGN**

P:\proj1\02\4E890_plans\pse\24e890ib004.dgn

LAST REVISION 03-26-15 | DATE PLOTTED => 30-MAR-2015 | TIME PLOTTED => 09:28

Dist	COUNTY	ROUTE	POST MILES TOTAL PROJECT	SHEET No.	TOTAL SHEETS
02	Sha	299	47.5/48.1	18	64

Shaun Alexander 03-26-15
REGISTERED CIVIL ENGINEER DATE

03-26-15
PLANS APPROVAL DATE

REGISTERED PROFESSIONAL ENGINEER SHAUN ALEXANDER No. 70833 Exp. 6-30-15 STATE OF CALIFORNIA

THE STATE OF CALIFORNIA OR ITS OFFICERS OR AGENTS SHALL NOT BE RESPONSIBLE FOR THE ACCURACY OR COMPLETENESS OF ELECTRONIC COPIES OF THIS PLAN SHEET.

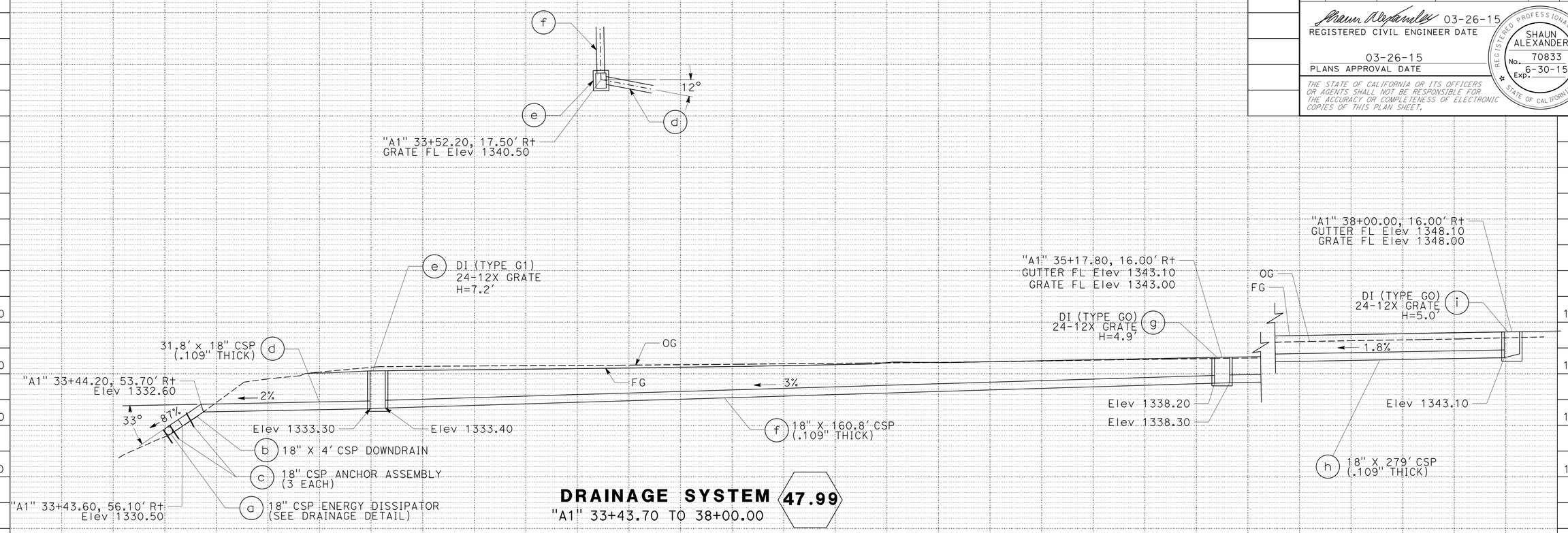

DRAINAGE SYSTEM 47.99
"A1" 33+43.70 TO 38+00.00

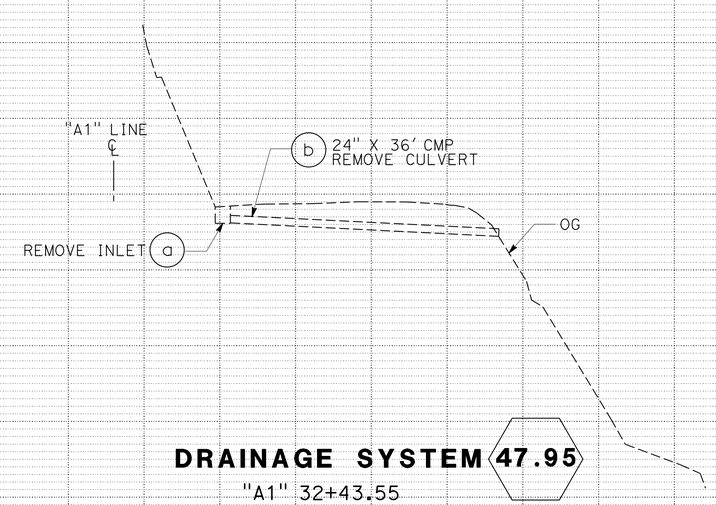

DRAINAGE SYSTEM 47.95
"A1" 32+43.55

DRAINAGE PROFILES

SCALE: 1" = 10' Horiz
1" = 10' Vert

DP-5

REVISED BY | DATE REVISED
BILL LEHMAN | SHAUN ALEXANDER
CALCULATED-DESIGNED BY | CHECKED BY
FUNCTIONAL SUPERVISOR
AL TRUJILLO

STATE OF CALIFORNIA - DEPARTMENT OF TRANSPORTATION
Caltrans **DESIGN**

P:\proj1\02\4E890_plans\pse\24e890ib005.dgn

LAST REVISION 03-26-15 | DATE PLOTTED => 30-MAR-2015 | TIME PLOTTED => 09:28

Dist	COUNTY	ROUTE	POST MILES TOTAL PROJECT	SHEET No.	TOTAL SHEETS
02	Sha	299	47.5/48.1	19	64

Shaun Alexander 03-26-15
REGISTERED CIVIL ENGINEER DATE

03-26-15
PLANS APPROVAL DATE

REGISTERED PROFESSIONAL ENGINEER SHAUN ALEXANDER No. 70833 Exp. 6-30-15 STATE OF CALIFORNIA

THE STATE OF CALIFORNIA OR ITS OFFICERS OR AGENTS SHALL NOT BE RESPONSIBLE FOR THE ACCURACY OR COMPLETENESS OF ELECTRONIC COPIES OF THIS PLAN SHEET.

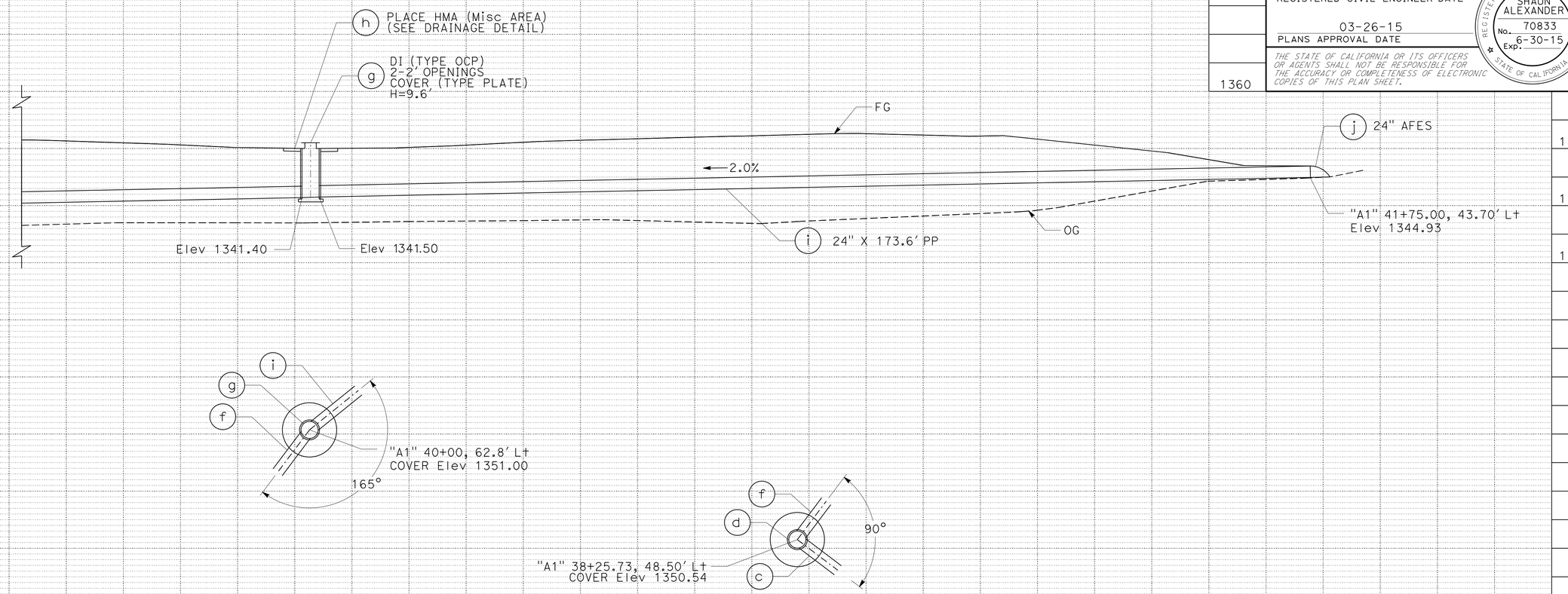

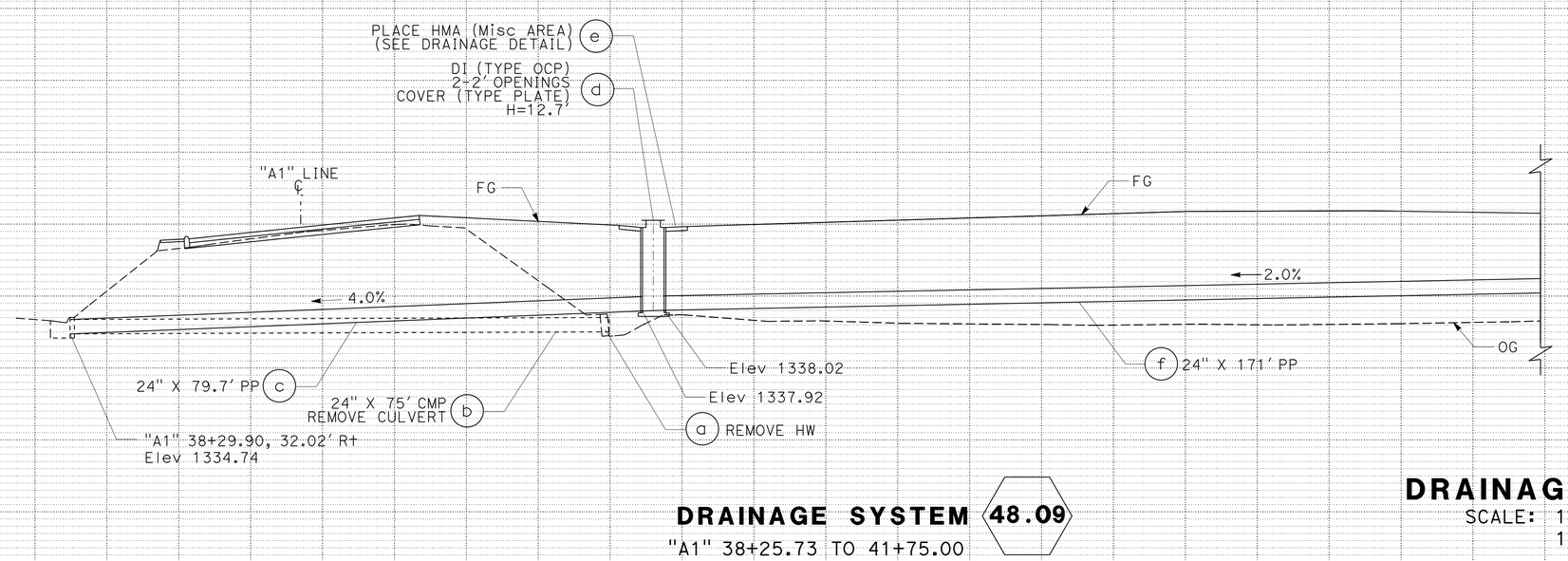

DRAINAGE SYSTEM 48.09

"A1" 38+25.73 TO 41+75.00

DRAINAGE PROFILES

SCALE: 1" = 10' Horiz
1" = 10' Vert

DP-6

REVISED BY | DATE REVISED
BILL LEHMAN | SHAUN ALEXANDER
CALCULATED-DESIGNED BY | CHECKED BY
FUNCTIONAL SUPERVISOR: AL TRUJILLO

STATE OF CALIFORNIA - DEPARTMENT OF TRANSPORTATION
Caltrans **DESIGN**

P:\proj1\02\4E890_plans\pse\24e890ib006.dgn

LAST REVISION 03-26-15 | DATE PLOTTED => 30-MAR-2015 | TIME PLOTTED => 09:28

Dist	COUNTY	ROUTE	POST MILES TOTAL PROJECT	SHEET No.	TOTAL SHEETS
02	Sha	299	47.5/48.1	20	64

Shaun Alexander 03-26-15
REGISTERED CIVIL ENGINEER DATE

03-26-15
PLANS APPROVAL DATE

REGISTERED PROFESSIONAL ENGINEER
SHAUN ALEXANDER
No. 70833
Exp. 6-30-15
STATE OF CALIFORNIA

THE STATE OF CALIFORNIA OR ITS OFFICERS OR AGENTS SHALL NOT BE RESPONSIBLE FOR THE ACCURACY OR COMPLETENESS OF ELECTRONIC COPIES OF THIS PLAN SHEET.

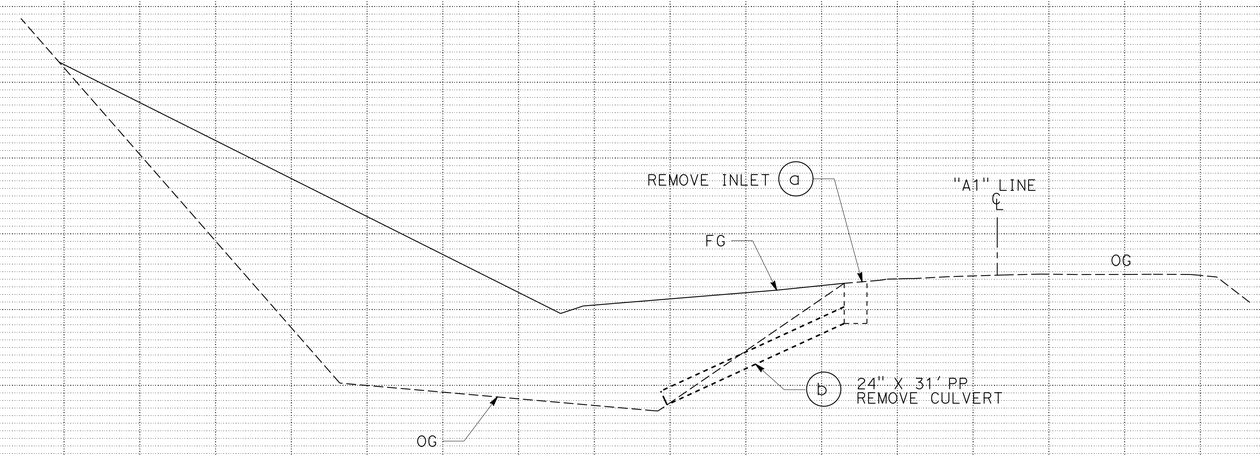

DRAINAGE SYSTEM 48.11
"A1" 40+82

DRAINAGE PROFILES

SCALE: 1" = 10' Horiz
1" = 10' Vert

DP-7

REVISED BY | DATE REVISED
BILL LEHMAN | SHAUN ALEXANDER
CALCULATED-DESIGNED BY | CHECKED BY
FUNCTIONAL SUPERVISOR
AL TRUJILLO

STATE OF CALIFORNIA - DEPARTMENT OF TRANSPORTATION
Caltrans **DESIGN**

P:\proj1\02\4E890_plans\pse\24e890ib007.dgn

LAST REVISION 03-26-15 | DATE PLOTTED => 30-MAR-2015 | TIME PLOTTED => 09:28

Dist	COUNTY	ROUTE	POST MILES TOTAL PROJECT	SHEET No.	TOTAL SHEETS
02	Sha	299	47.5/48.1	21	64

Brett Ditzler 03-26-15
REGISTERED CIVIL ENGINEER DATE

03-26-15
PLANS APPROVAL DATE

REGISTERED PROFESSIONAL ENGINEER BRETT DITZLER No. C74085 Exp. 6-30-15 CIVIL STATE OF CALIFORNIA

THE STATE OF CALIFORNIA OR ITS OFFICERS OR AGENTS SHALL NOT BE RESPONSIBLE FOR THE ACCURACY OR COMPLETENESS OF SCANNED COPIES OF THIS PLAN SHEET.

NOTE:

1. LENGTH OF NEW DOUBLE 8′ x 8′ RCB DOES NOT INCLUDE ADDITIONAL LENGTH REQUIRED TO CONNECT TO EXISTING RCB. SEE STANDARD PLANS.
2. FOR ACCURATE RIGHT OF WAY DATA, CONTACT RIGHT OF WAY ENGINEERING AT THE DISTRICT OFFICE.

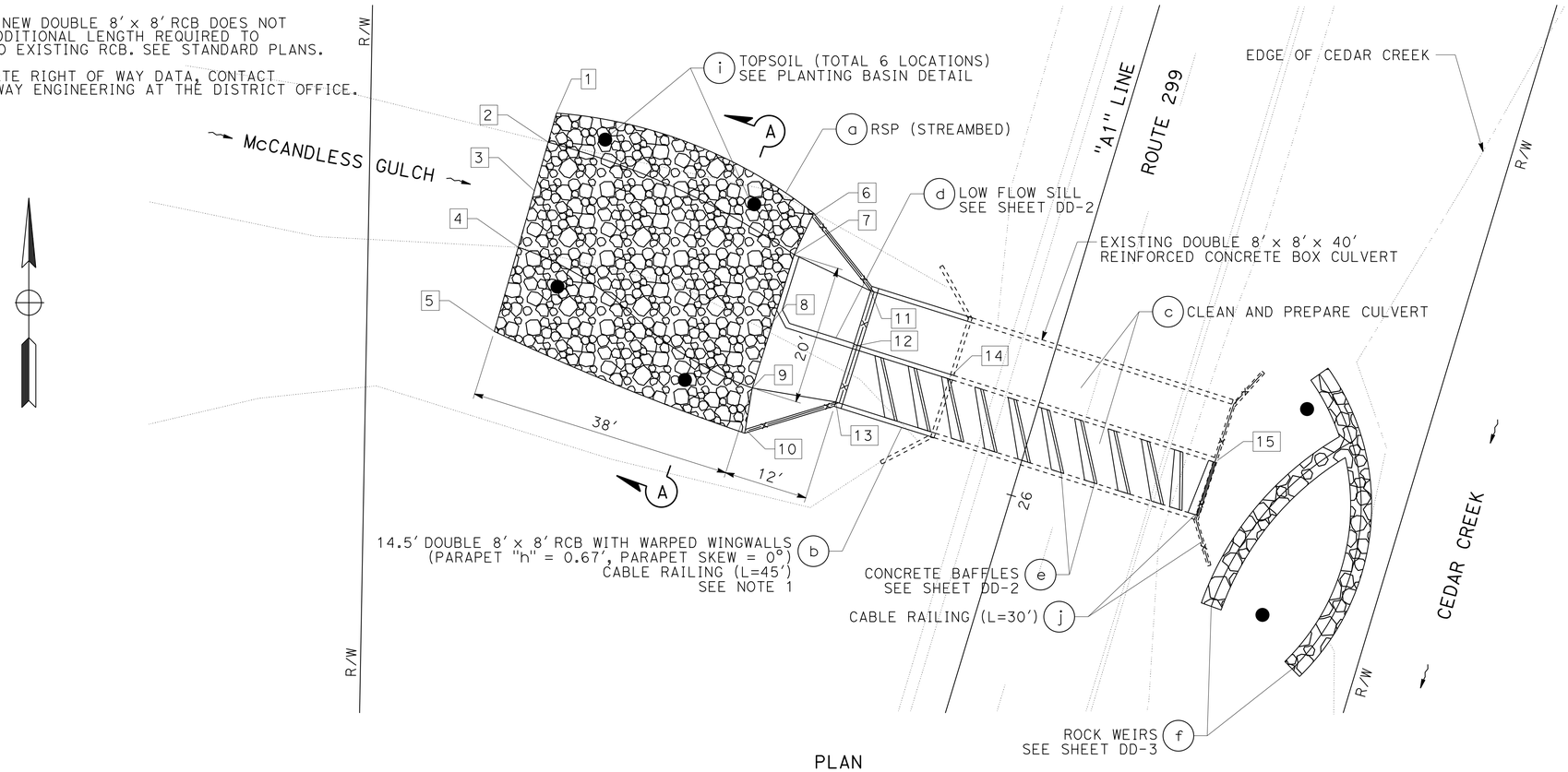

PLAN
SCALE: 1" = 10′

LEGEND:

—x— CABLE RAILING

● TOPSOIL (SEE PLANTING BASIN DETAIL)

POINT DATA

No. #	STATION	OFFSET	FG Elev
1	"A1" 26+33.5	78.1′ L+	1325.0*
2	"A1" 26+29.2	78.0′ L+	1322.0*
3	"A1" 26+21.4	77.9′ L+	1319.5*
4	"A1" 26+13.6	77.8′ L+	1321.7*
5	"A1" 26+01.0	77.6′ L+	1325.1*
6	"A1" 26+29.91	38.82′ L+	1323.40
7	"A1" 26+23.97	39.70′ L+	1319.15
8	"A1" 26+13.97	39.81′ L+	1319.15
9	"A1" 26+03.97	39.91′ L+	1319.15
10	"A1" 25+98.02	39.14′ L+	1323.40
11	"A1" 26+22.18	27.72′ L+	1319.03
12	"A1" 26+13.85	27.81′ L+	1319.03
13	"A1" 26+05.52	27.89′ L+	1319.03
14	"A1" 26+13.68	13.31′ L+	1318.30*
15	"A1" 26+13.29	26.75′ R+	1316.30*

* MATCH EXISTING Elev

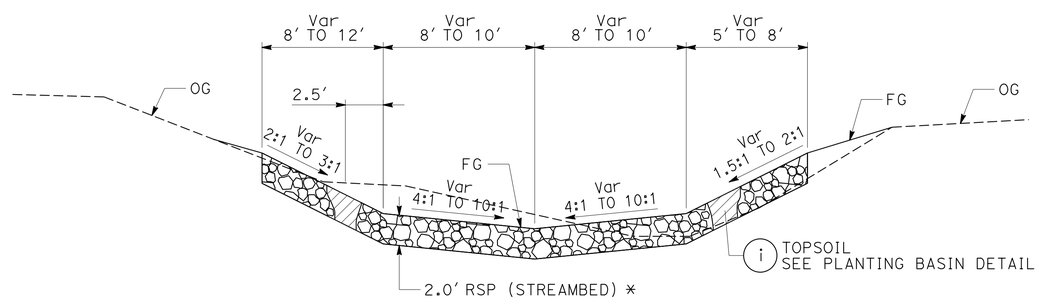

* RSP (STREAMBED) CONSISTS OF:

20% BY VOLUME: RSP (1/4 T, METHOD A)
30% BY VOLUME: RSP (No. 1, METHOD B)
25% BY VOLUME: RSP (No. 2, METHOD B)
25% BY VOLUME: ENGINEERED STREAMBED MATERIAL

SECTION A-A (Typ)
(a) **RSP (STREAMBED)**
NO SCALE

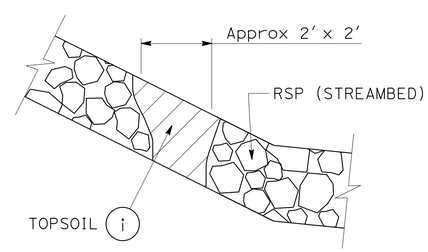

TYPICAL SECTION
PLANTING BASIN DETAIL
NO SCALE

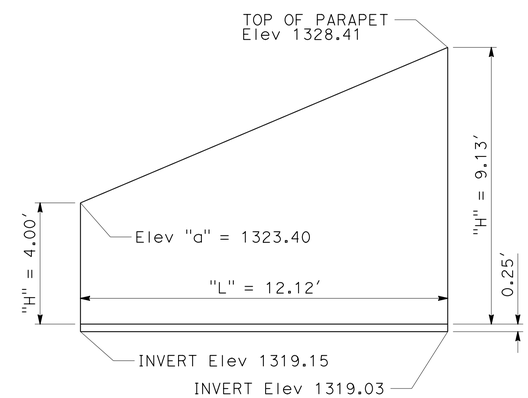

ELEVATION
(b) **WARPED WINGWALL**
NO SCALE
NOTE: "W" = 10.0′. LEFT WINGWALL SHOWN, RIGHT SIMILAR.

DRAINAGE SYSTEM (47.83)
DRAINAGE DETAILS
SCALE: AS SHOWN

DD-1

REVISED BY | DATE REVISED
BRETT DITZLER | STEVE THORNE
CALCULATED-DESIGNED BY | CHECKED BY
FUNCTIONAL SUPERVISOR: STEVE THORNE

STATE OF CALIFORNIA - DEPARTMENT OF TRANSPORTATION
Caltrans
HYDRAULICS DESIGN

P:\proj1\02\4E890_plans\pse\24e890ic001.dgn

LAST REVISION | DATE PLOTTED => 30-MAR-2015 | TIME PLOTTED => 09:28

Dist	COUNTY	ROUTE	POST MILES TOTAL PROJECT	SHEET No.	TOTAL SHEETS
02	Sha	299	47.5/48.1	22	64

Brett Ditzler 03-26-15
REGISTERED CIVIL ENGINEER DATE

03-26-15
PLANS APPROVAL DATE

REGISTERED PROFESSIONAL ENGINEER BRETT DITZLER No. C74085 Exp. 6-30-15 CIVIL STATE OF CALIFORNIA

THE STATE OF CALIFORNIA OR ITS OFFICERS OR AGENTS SHALL NOT BE RESPONSIBLE FOR THE ACCURACY OR COMPLETENESS OF SCANNED COPIES OF THIS PLAN SHEET.

NOTES:

1. CLEARANCE TO REINFORCING STEEL MUST BE 2" MINIMUM.
2. DIMENSION SHOWN IS MEASURED WHERE THE BAFFLE MEETS THE WALL. DIMENSION WILL VARY ALONG THE LENGTH OF THE BAFFLE.

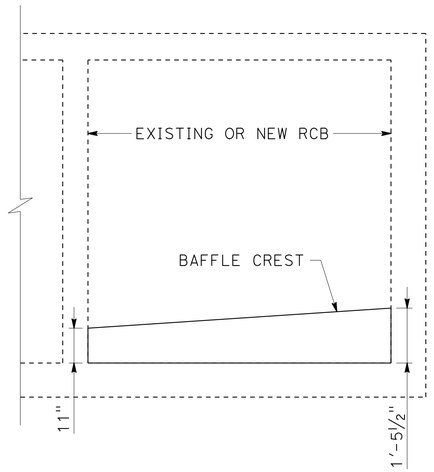

SECTION B-B

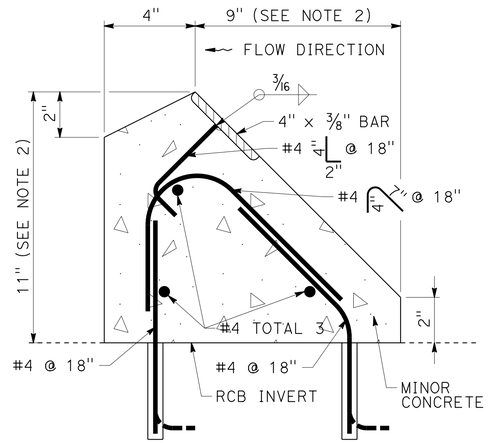

SECTION C-C

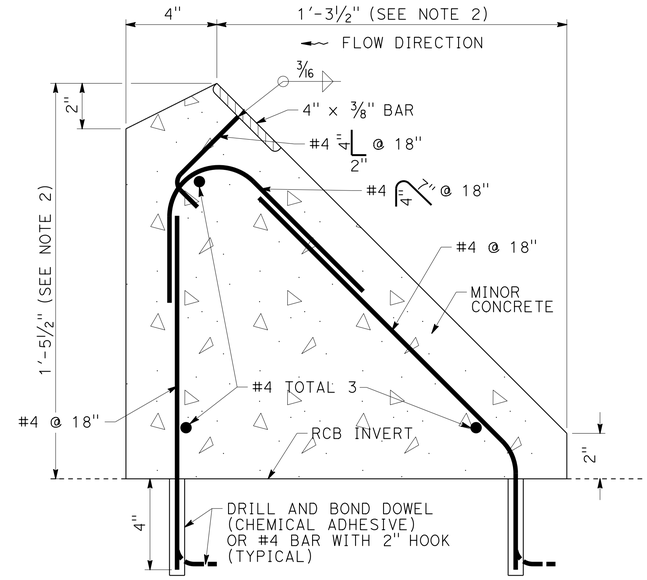

SECTION D-D

ⓔ **CONCRETE BAFFLES**

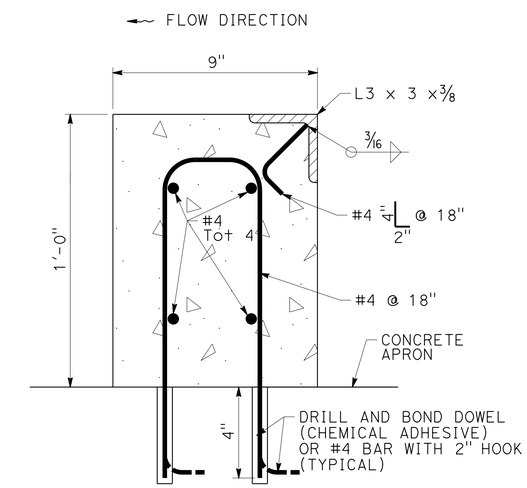

SECTION A-A

ⓓ **LOW FLOW SILL**

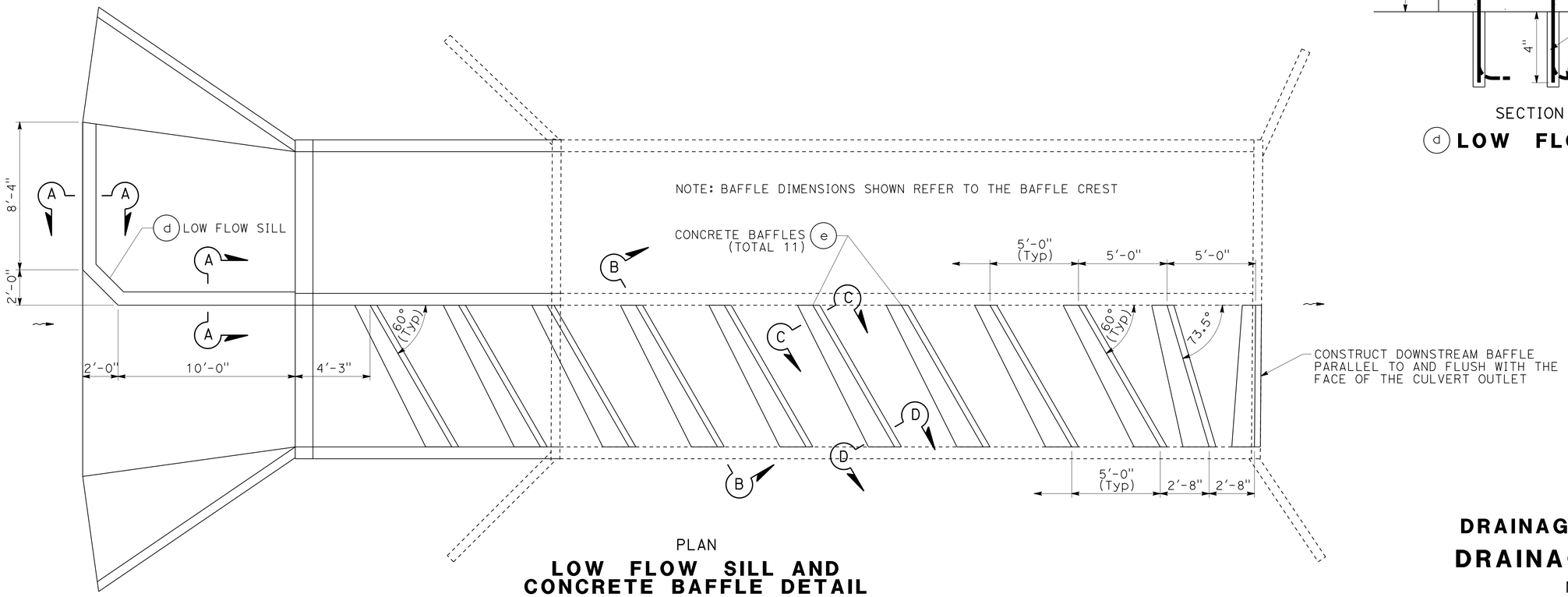

PLAN

LOW FLOW SILL AND CONCRETE BAFFLE DETAIL

DRAINAGE SYSTEM 47.83

DRAINAGE DETAILS

NO SCALE

DD-2

REVISED BY | DATE REVISED
BRETT DITZLER | STEVE THORNE
CALCULATED-DESIGNED BY | CHECKED BY
FUNCTIONAL SUPERVISOR | STEVE THORNE
STATE OF CALIFORNIA - DEPARTMENT OF TRANSPORTATION
Caltrans® HYDRAULICS DESIGN
P:\proj1\02\4E890_plans\pse\24e890ic002.dgn
LAST REVISION | DATE PLOTTED => 30-MAR-2015 | TIME PLOTTED => 09:28

Dist	COUNTY	ROUTE	POST MILES TOTAL PROJECT	SHEET No.	TOTAL SHEETS
02	Sha	299	47.5/48.1	23	64

Brett Ditzler 03-26-15
REGISTERED CIVIL ENGINEER DATE

03-26-15
PLANS APPROVAL DATE

REGISTERED PROFESSIONAL ENGINEER BRETT DITZLER No. C74085 Exp. 6-30-15 CIVIL STATE OF CALIFORNIA

THE STATE OF CALIFORNIA OR ITS OFFICERS OR AGENTS SHALL NOT BE RESPONSIBLE FOR THE ACCURACY OR COMPLETENESS OF SCANNED COPIES OF THIS PLAN SHEET.

NOTES:

1. RSP (STREAMBED) CONSISTS OF:

   20% BY VOLUME: RSP (1/4 T, METHOD A)
   30% BY VOLUME: RSP (No. 1, METHOD B)
   25% BY VOLUME: RSP (No. 2, METHOD B)
   25% BY VOLUME: ENGINEERED STREAMBED MATERIAL

2. RSP (ROCK WEIR) CONSISTS OF:

   10% BY VOLUME: RSP (2T, METHOD A)
   40% BY VOLUME: RSP (1T, METHOD A)
   30% BY VOLUME: RSP (1/4 T, METHOD A)
   15% BY VOLUME: RSP (No. 2, METHOD B)
   5% BY VOLUME: ENGINEERED STREAMBED MATERIAL

3. FOR ACCURATE RIGHT OF WAY DATA, CONTACT RIGHT OF WAY ENGINEERING AT THE DISTRICT OFFICE.

POINT DATA

No. #	STATION	OFFSET	FG Elev
1	"A1" 26+29.4	37.2′ Rt	1321.0*
2	"A1" 26+21.5	44.4′ Rt	1319.50
3	"A1" 26+16.9	40.5′ Rt	1318.70
4	"A1" 26+08.4	35.6′ Rt	1316.70
5	"A1" 25+99.0	32.7′ Rt	1318.70
6	"A1" 25+93.1	32.0′ Rt	1321.7*
7	"A1" 26+10.4	49.0′ Rt	1317.30
8	"A1" 26+03.6	49.7′ Rt	1315.90
9	"A1" 25+96.7	49.0′ Rt	1317.30
10	"A1" 25+87.9	45.7′ Rt	1319.0*

* MATCH EXISTING Elev

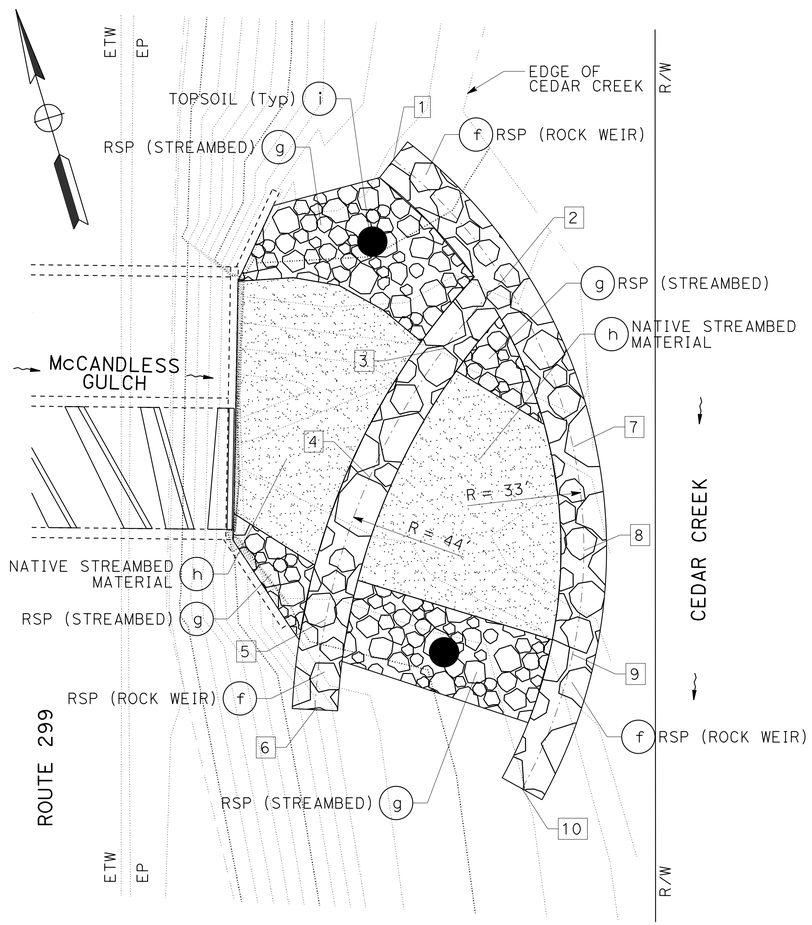

PLAN

ROCK WEIR DETAIL

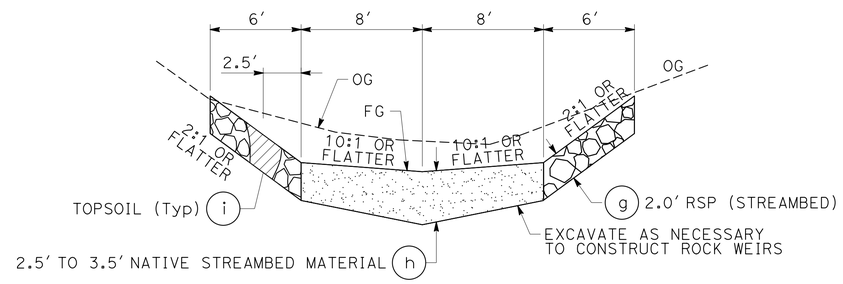

TYPICAL CROSS SECTION BETWEEN ROCK WEIRS

ROCK WEIR POOL CROSS SECTION

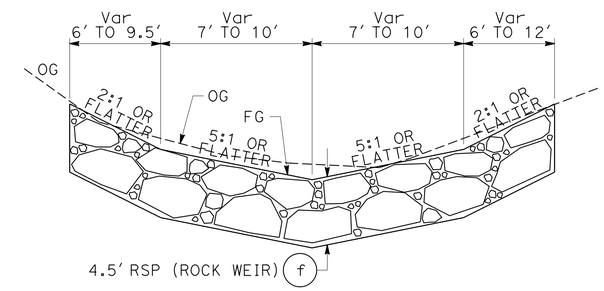

TYPICAL CROSS SECTION AT ROCK WEIR

ROCK WEIR CROSS SECTION

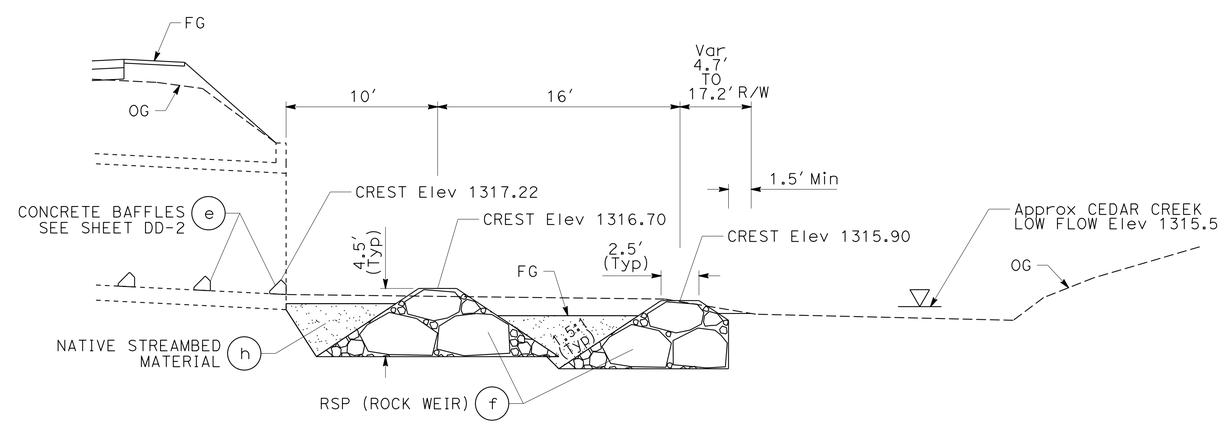

ROCK WEIR PROFILE

DRAINAGE DETAILS

NO SCALE

DD-3

STATE OF CALIFORNIA - DEPARTMENT OF TRANSPORTATION
Caltrans HYDRAULICS DESIGN

BRETT DITZLER — REVISED BY
STEVE THORNE — DATE REVISED
CALCULATED-DESIGNED BY
CHECKED BY
FUNCTIONAL SUPERVISOR: STEVE THORNE

P:\proj1\02\4E890_plans\pse\24e890ic003.dgn

LAST REVISION — DATE PLOTTED => 30-MAR-2015 TIME PLOTTED => 09:28

Dist	COUNTY	ROUTE	POST MILES TOTAL PROJECT	SHEET No.	TOTAL SHEETS
02	Sha	299	47.5/48.1	24	64

Shaun Alexander 03-26-15
REGISTERED CIVIL ENGINEER DATE

03-26-15
PLANS APPROVAL DATE

REGISTERED PROFESSIONAL ENGINEER
SHAUN ALEXANDER
No. 70833
Exp. 6-30-15
STATE OF CALIFORNIA

THE STATE OF CALIFORNIA OR ITS OFFICERS OR AGENTS SHALL NOT BE RESPONSIBLE FOR THE ACCURACY OR COMPLETENESS OF ELECTRONIC COPIES OF THIS PLAN SHEET.

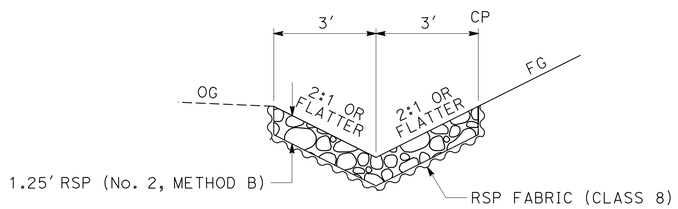

RSP (No. 2, METHOD B) DETAIL

"A1" 26+50 TO 28+83 L+

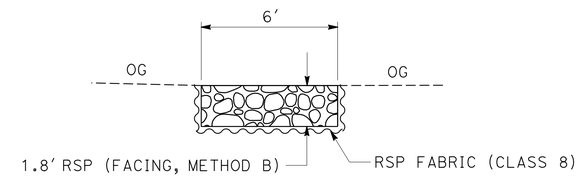

RSP (FACING, METHOD B) DETAIL

DRAINAGE SYSTEM No. 47.54 e 47.65 e

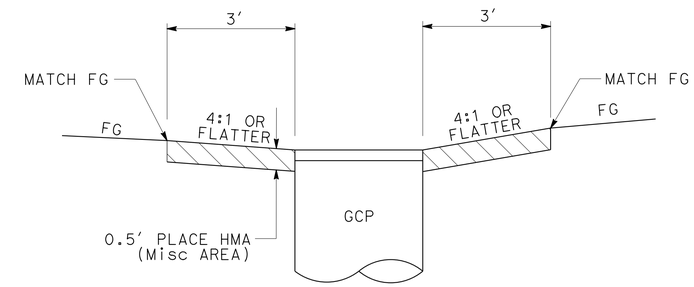

SECTION A-A

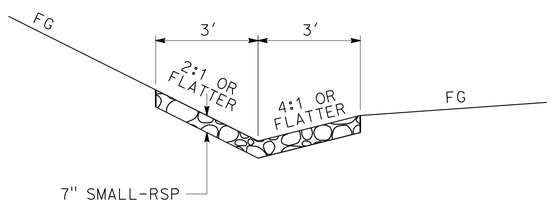

SMALL-RSP DETAIL

"A1" 38+26 TO 39+95 L+
"A1" 40+05 TO 41+75 L+

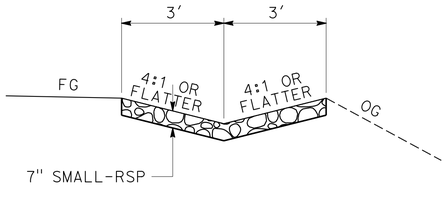

SMALL-RSP DETAIL

"A1" 29+52 TO 33+50 R+

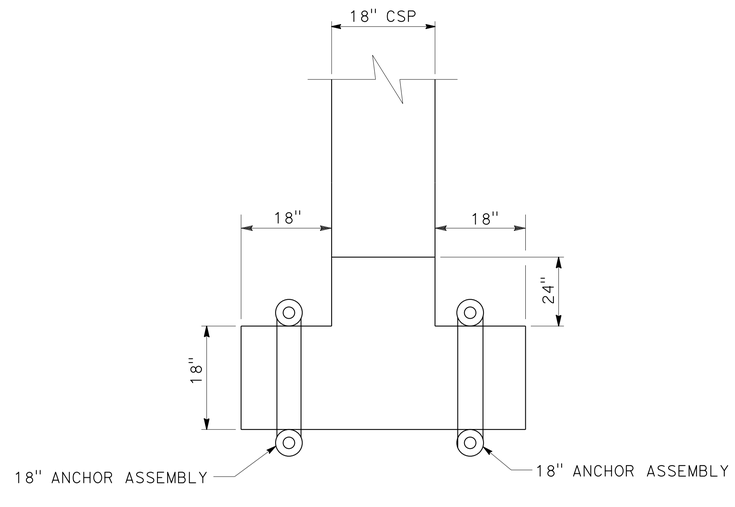

18" CSP ENERGY DISSIPATOR

DRAINAGE SYSTEM No. 47.90 c 47.99 a

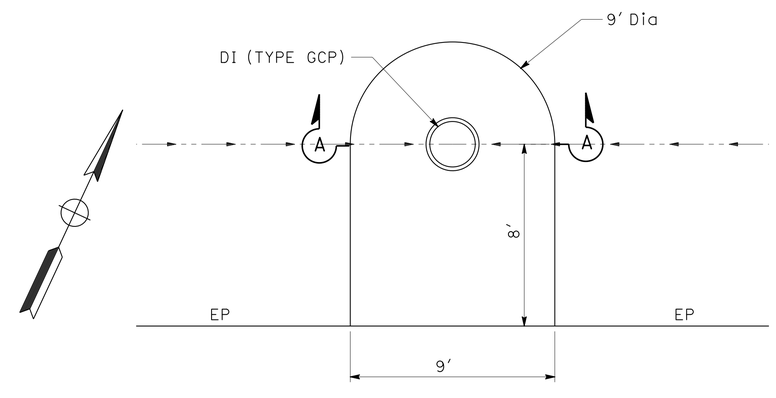

PLAN

GCP INLET HMA APRON DETAIL

DRAINAGE SYSTEM No. 47.65 b

DRAINAGE DETAILS

NO SCALE

DD-4

REVISED BY | DATE REVISED
BILL LEHMAN | SHAUN ALEXANDER
CALCULATED-DESIGNED BY | CHECKED BY
FUNCTIONAL SUPERVISOR
AL TRUJILLO

STATE OF CALIFORNIA - DEPARTMENT OF TRANSPORTATION
Caltrans
DESIGN

P:\proj1\02\4E890_plans\pse\24e890ic004.dgn

LAST REVISION 03-26-15
DATE PLOTTED => 30-MAR-2015
TIME PLOTTED => 09:29

Dist	COUNTY	ROUTE	POST MILES TOTAL PROJECT	SHEET No.	TOTAL SHEETS
02	Sha	299	47.5/48.1	25	64

Shaun Alexander 03-26-15
REGISTERED CIVIL ENGINEER DATE

03-26-15
PLANS APPROVAL DATE

REGISTERED PROFESSIONAL ENGINEER
SHAUN ALEXANDER
No. 70833
Exp. 6-30-15
STATE OF CALIFORNIA

THE STATE OF CALIFORNIA OR ITS OFFICERS OR AGENTS SHALL NOT BE RESPONSIBLE FOR THE ACCURACY OR COMPLETENESS OF ELECTRONIC COPIES OF THIS PLAN SHEET.

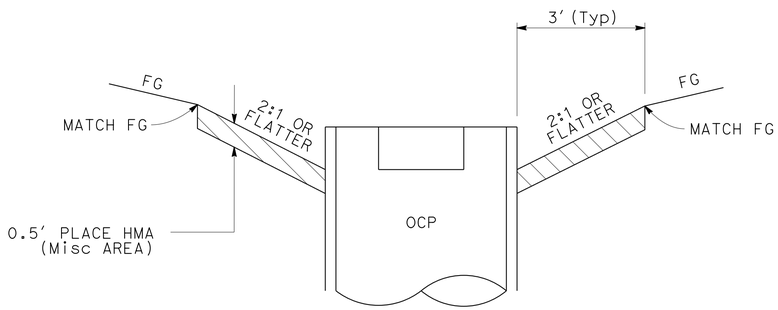

SECTION A-A

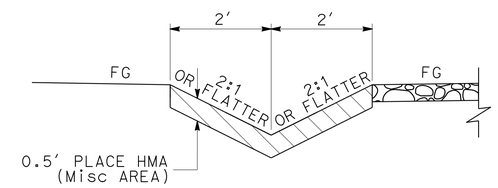

SECTION B-B

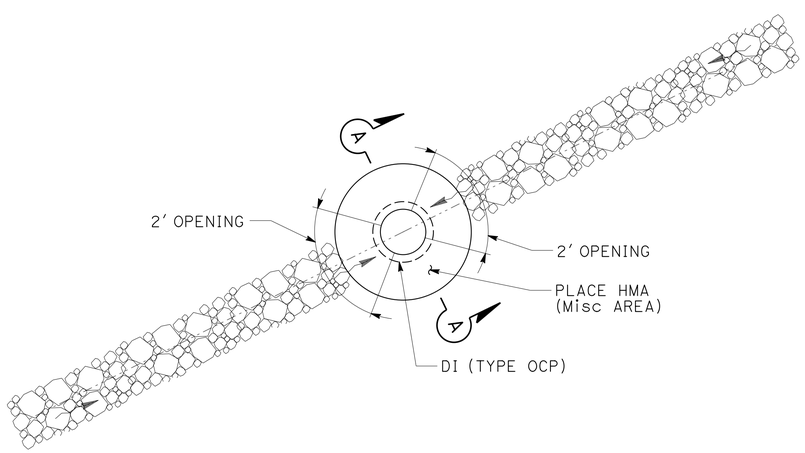

HMA APRON AND DRAINAGE INLET DETAIL

DRAINAGE SYSTEM No. 48.09 d g

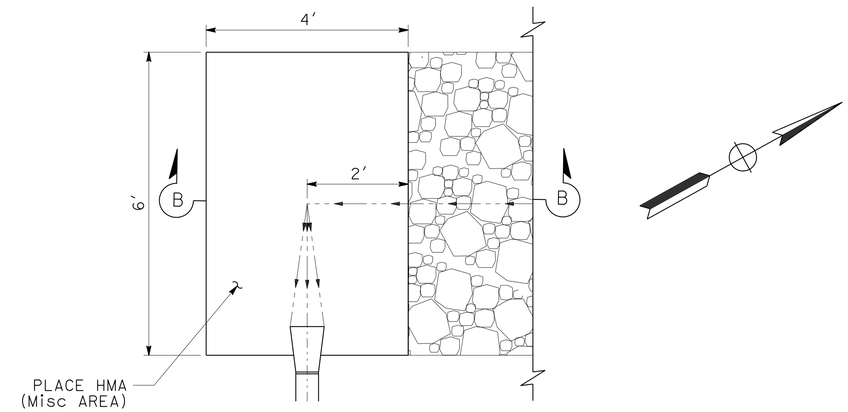

PLAN

DOWNDRAIN TAPER INLET AC APRON DETAIL

DRAINAGE SYSTEM No. 47.90 d

DRAINAGE DETAILS

NO SCALE

DD-5

REVISED BY	DATE REVISED
BILL LEHMAN	SHAUN ALEXANDER

CALCULATED-DESIGNED BY
CHECKED BY

FUNCTIONAL SUPERVISOR
AL TRUJILLO

STATE OF CALIFORNIA - DEPARTMENT OF TRANSPORTATION
Caltrans
DESIGN

P:\proj1\02\4E890_plans\pse\24e890ic005.dgn

LAST REVISION 03-26-15
DATE PLOTTED => 30-MAR-2015
TIME PLOTTED => 09:29

Dist	COUNTY	ROUTE	POST MILES TOTAL PROJECT	SHEET No.	TOTAL SHEETS
02	Sha	299	47.5/48.1	26	64

Shaun Alexander 03-26-15
REGISTERED CIVIL ENGINEER DATE

03-26-15
PLANS APPROVAL DATE

REGISTERED PROFESSIONAL ENGINEER
SHAUN ALEXANDER
No. 70833
Exp. 6-30-15
STATE OF CALIFORNIA

THE STATE OF CALIFORNIA OR ITS OFFICERS OR AGENTS SHALL NOT BE RESPONSIBLE FOR THE ACCURACY OR COMPLETENESS OF ELECTRONIC COPIES OF THIS PLAN SHEET.

NOTES:

1. ALL PP CULVERTS SHALL HAVE SMOOTH INTERIOR WALL.
2. ALL CORRUGATED STEEL PIPE CULVERTS SHALL HAVE POSITIVE JOINT TYPE.

LINED CHANNEL QUANTITIES

STATION	ROCK SLOPE PROTECTION (No. 2, METHOD B)	SMALL-ROCK SLOPE PROTECTION	ROCK SLOPE PROTECTION FABRIC (CLASS 8)
	CY	CY	SQYD
"A1" 26+50 TO 28+83 Lt	71.2		234
"A1" 29+52 TO 33+50 Rt		52.2	
"A1" 38+26 TO 39+95 Lt		23.9	
"A1" 40+05 TO 41+75 Lt		24.0	
SUBTOTAL	71.2	100.1	234

DRAINAGE QUANTITIES

DQ-1

REVISED BY | DATE REVISED
BILL LEHMAN | SHAUN ALEXANDER
CALCULATED-DESIGNED BY | CHECKED BY
FUNCTIONAL SUPERVISOR
AL TRUJILLO

STATE OF CALIFORNIA - DEPARTMENT OF TRANSPORTATION
Caltrans DESIGN

P:\proj1\02\4E890_plans\pse\24e890id001.dgn

LAST REVISION 03-26-15 | DATE PLOTTED => 30-MAR-2015 | TIME PLOTTED => 09:29

Dist	COUNTY	ROUTE	POST MILES TOTAL PROJECT	SHEET No.	TOTAL SHEETS
02	Sha	299	47.5/48.1	27	64

Shaun Alexander 03-26-15
REGISTERED CIVIL ENGINEER DATE

03-26-15
PLANS APPROVAL DATE

REGISTERED PROFESSIONAL ENGINEER SHAUN ALEXANDER No. 70833 Exp. 6-30-15 STATE OF CALIFORNIA

THE STATE OF CALIFORNIA OR ITS OFFICERS OR AGENTS SHALL NOT BE RESPONSIBLE FOR THE ACCURACY OR COMPLETENESS OF ELECTRONIC COPIES OF THIS PLAN SHEET.

DRAINAGE QUANTITIES

DRAINAGE PROFILE SHEET No.	DRAINAGE SYSTEM No.	UNIT No.	REMOVE CULVERT (LF)	REMOVE INLET	REMOVE HEADWALL	CLEAN AND PREPARE CULVERT	CHANNEL EXCAVATION	DITCH EXCAVATION	HOT MIX ASPHALT (TYPE A)	PLACE HOT MIX ASPHALT (MISCELLANEOUS AREA)	STRUCTURAL CONCRETE, BOX CULVERT	MINOR CONCRETE (MINOR STRUCTURE)	BAR REINFORCING STEEL (BOX CULVERT)	24" PLASTIC PIPE	71" x 47" CORRUGATED STEEL PIPE ARCH (0.109" THICK)	18" CORRUGATED STEEL PIPE (0.109" THICK)	18" CORRUGATED STEEL PIPE DOWNDRAIN (0.109" THICK)	18" ENTRANCE TAPER	18" ANCHOR ASSEMBLY	18" CORRUGATED STEEL PIPE ENERGY DISSIPATOR (0.064" THICK)	24" ALTERNATIVE FLARED END SECTION	36" PRECAST CONCRETE PIPE INLET	ROCK SLOPE PROTECTION (FACING, METHOD B)	ROCK SLOPE PROTECTION FABRIC (CLASS 8)	ROCK SLOPE PROTECTION (STREAMBED)	ROCK SLOPE PROTECTION (ROCK WEIR)	NATIVE STREAMBED MATERIAL	IMPORTED TOPSOIL (CY)	CABLE RAILING	MISCELLANEOUS IRON AND STEEL	(N) HEIGHT	COMMENTS	DRAINAGE PROFILE SHEET No.	DRAINAGE SYSTEM No.	UNIT No.
			LF	EA	EA	LF	CY	CY	TON	SQYD	CY	CY	LB	LF	LF	LF	LF	EA	EA	EA	EA	LF	CY	SQYD	CY	CY	CY	CY	LF	LB	LF				
DP-1	47.54	a			1																												DP-1	47.54	a
		b	41.5																																b
		c										1.20																				24" STRAIGHT HEADWALL			c
		d												61.5																					d
		e																					2.0	7.7											e
		f										1.20																				24" STRAIGHT HEADWALL			f
		g						7.1																											g
		h																					7.3	17.4											h
DP-2	47.64	a			1																												DP-2	47.64	a
		b	62.1																																b
DP-2	47.65	a										0.4										4.2								215	3.7	GCP INLET, 36RX GRATE	DP-2	47.65	a
		b							4	10.8																						HMA APRON			b
		c												70.9																					c
		d										1.20																				24" STRAIGHT HEADWALL			d
		e																					3.2	8.6											e
																																			f
DP-3	47.76	a			1																												DP-3	47.76	a
		b	46																																b
DP-3	47.77	a						7																									DP-3	47.77	a
		b										3.81																	20			STRAIGHT HEADWALL			b
		c													62.2																				c
		d										3.81																	20			STRAIGHT HEADWALL			d
DP-4	47.83	a					43																		100								DP-4	47.83	a
		b									41.2		8800																45			14.5' DOUBLE 8' x 8' RCB			b
		c				40																													c
		d										0.59																		152		LOW FLOW SILL			d
		e										3.99																		518		CONCRETE BAFFLES			e
		f					15																			114									f
		g																							15										g
		h																									29								h
		i																										2.4				PLANTING BASINS			i
		j																											30						j
SUBTOTAL			149.6	0	3	40	58	14.1	4	10.8	41.2	16.20	8800	132.4	62.2	0	0	0	0	0	0	4.2	12.5	33.7	115	114	29	2.4	115	885					

(N) - NOT A SEPARATE PAY ITEM, FOR INFORMATION ONLY

DRAINAGE QUANTITIES
DQ-2

BILL LEHMAN — REVISED BY
SHAUN ALEXANDER — DATE REVISED
CALCULATED-DESIGNED BY
CHECKED BY
FUNCTIONAL SUPERVISOR
AL TRUJILLO

STATE OF CALIFORNIA - DEPARTMENT OF TRANSPORTATION
Caltrans DESIGN

P:\proj1\02\4E890_plans\pse\24e890id002.dgn

LAST REVISION 03-26-15 | DATE PLOTTED => 30-MAR-2015 | TIME PLOTTED => 09:29

Dist	COUNTY	ROUTE	POST MILES TOTAL PROJECT	SHEET No.	TOTAL SHEETS
02	Sha	299	47.5/48.1	28	64

Shaun Alexander 03-26-15
REGISTERED CIVIL ENGINEER DATE

03-26-15
PLANS APPROVAL DATE

REGISTERED PROFESSIONAL ENGINEER SHAUN ALEXANDER No. 70833 Exp. 6-30-15 STATE OF CALIFORNIA

THE STATE OF CALIFORNIA OR ITS OFFICERS OR AGENTS SHALL NOT BE RESPONSIBLE FOR THE ACCURACY OR COMPLETENESS OF ELECTRONIC COPIES OF THIS PLAN SHEET.

DRAINAGE QUANTITIES

DRAINAGE PROFILE SHEET No.	DRAINAGE SYSTEM No.	UNIT No.	REMOVE CULVERT (LF)	REMOVE INLET	REMOVE HEADWALL	CLEAN AND PREPARE CULVERT	CHANNEL EXCAVATION	DITCH EXCAVATION	HOT MIX ASPHALT (TYPE A)	PLACE HOT MIX ASPHALT (MISCELLANEOUS AREA)	STRUCTURAL CONCRETE, BOX CULVERT	MINOR CONCRETE (MINOR STRUCTURE)	BAR REINFORCING STEEL (BOX CULVERT)	24" PLASTIC PIPE	71" x 47" CORRUGATED STEEL PIPE ARCH (0.109" THICK)	18" CORRUGATED STEEL PIPE (0.109" THICK)	18" CORRUGATED STEEL PIPE DOWNDRAIN (0.109" THICK)	18" ENTRANCE TAPER	18" ANCHOR ASSEMBLY	18" CORRUGATED STEEL PIPE ENERGY DISSIPATOR (0.064" THICK)	24" ALTERNATIVE FLARED END SECTION	36" PRECAST CONCRETE PIPE INLET	ROCK SLOPE PROTECTION (FACING, METHOD B)	ROCK SLOPE PROTECTION FABRIC (CLASS 8)	ROCK SLOPE PROTECTION (STREAMBED)	ROCK SLOPE PROTECTION (ROCK WEIR)	NATIVE STREAMBED MATERIAL	IMPORTED TOPSOIL (CY)	CABLE RAILING	MISCELLANEOUS IRON AND STEEL	(N) HEIGHT	COMMENTS	DRAINAGE PROFILE SHEET No.	DRAINAGE SYSTEM No.	UNIT No.
			LF	EA	EA	LF	CY	CY	TON	SQYD	CY	CY	LB	LF	LF	LF	LF	EA	EA	EA	EA	LF	CY	SQYD	CY	CY	CY	CY	LF	LB	LF				
DP-4	47.90	a															14.9																D-2	47.90	a
		b																	4																b
		c																		1															c
		d							1	2.7																						HMA APRON			d
		e																1																	e
DP-5	47.95	a		1																													DP-5	47.95	a
		b	36																																b
DP-5	47.99	a																		1													DP-5	47.99	a
		b															4																		b
		c																	3																c
		d														31.8																			d
		e										1.87																		239	7.2	G1 INLET,24-12X GRATE			e
		f														160.8																			f
		g										1.71																		239	4.9	GO INLET,24-12X GRATE			g
		h														279																			h
		i										1.73																		239	5.0	GO INLET,24-12X GRATE			i
DP-6	48.09	a			1																												DP-6	48.09	a
		b	75																																b
		c												79.7																					c
		d										0.4										13.2								112	12.7	OCP INLET, PLATE COVER			d
		e							2	6.3																						HMA APRON			e
		f												171																					f
		g										0.4										10.1								112	9.6	OCP INLET, PLATE COVER			g
		h							2	6.3																						HMA APRON			h
		i												173.6																					i
		j																			1														j
DP-7	48.11	a		1																													DP-7	48.11	a
		b	31																																b
FROM LINED CHANNEL QUANTITIES																								234											
SUBTOTAL			142	2	0	0	0	0	5	15.3	0	6.11	0	424.3	0	471.6	18.9	1	7	2	1	23.3	0	0	0	0	0	0	0	941					
DQ-2 TOTALS			149.6	0	3	40	58	14.1	4	10.8	41.2	16.20	8800	132.4	62.2	0	0	0	0	0	0	4.2	12.5	33.7	115	114	29	2.4	115	885					
GRAND TOTALS			291.6	2	3	40	58	14.1	9*	26.1	41.2	22.31	8800	556.7	62.2	471.6	18.9	1	7	2	1	27.5	12.5	267.7	115	114	29	2.4	115	1826					

(N) - NOT A SEPARATE PAY ITEM, FOR INFORMATION ONLY
* OTHER QUANTITIES SHOWN ELSEWHERE

REVISED BY	DATE REVISED

CALCULATED-DESIGNED BY: BILL LEHMAN
CHECKED BY: SHAUN ALEXANDER
FUNCTIONAL SUPERVISOR: AL TRUJILLO

STATE OF CALIFORNIA - DEPARTMENT OF TRANSPORTATION
Caltrans DESIGN

P:\proj1\02\4E890_plans\pse\24e890id003.dgn

LAST REVISION 03-26-15 | DATE PLOTTED => 30-MAR-2015 | TIME PLOTTED => 09:29

DRAINAGE QUANTITIES

DQ-3

Dist	COUNTY	ROUTE	POST MILES TOTAL PROJECT	SHEET No.	TOTAL SHEETS
02	Sha	299	47.5/48.1	29	64

Shaun Alexander 03-26-15
REGISTERED CIVIL ENGINEER DATE

03-26-15
PLANS APPROVAL DATE

REGISTERED PROFESSIONAL ENGINEER
SHAUN ALEXANDER
No. 70833
Exp. 6-30-15
STATE OF CALIFORNIA

THE STATE OF CALIFORNIA OR ITS OFFICERS OR AGENTS SHALL NOT BE RESPONSIBLE FOR THE ACCURACY OR COMPLETENESS OF ELECTRONIC COPIES OF THIS PLAN SHEET.

NOTE:

1. FOR ACCURATE RIGHT OF WAY DATA, CONTACT RIGHT OF WAY ENGINEERING AT THE DISTRICT OFFICE.

LEGEND:

—— fo —— ABANDON FIBER OPTIC UTILITY

—— FO —— SPRINT FIBER OPTIC UTILITY

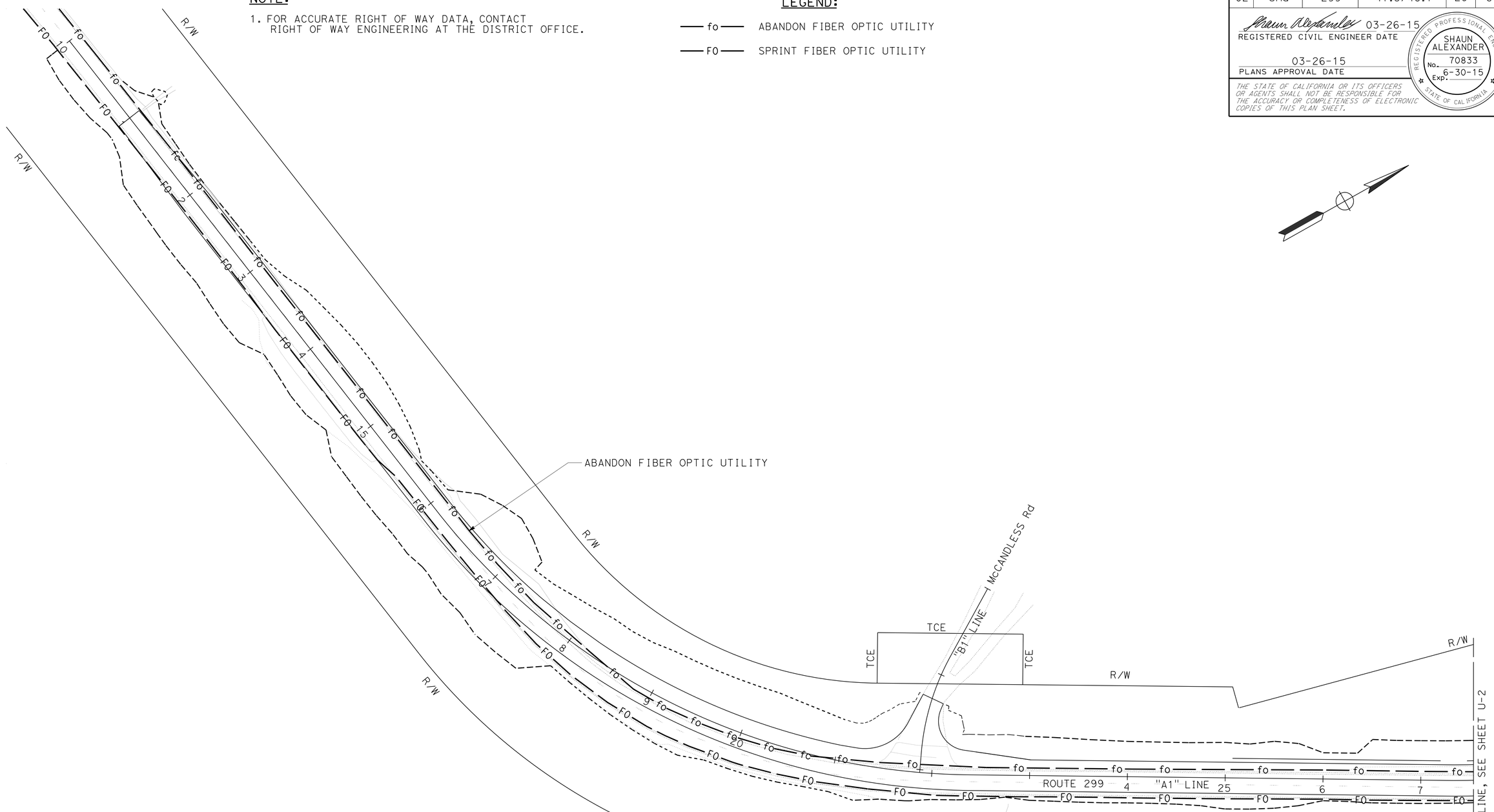

UTILITY PLAN

SCALE: 1" = 50'

U-1

APPROVED FOR UTILITY WORK ONLY

REVISED BY	BILL LEHMAN
DATE REVISED	
CALCULATED-DESIGNED BY	SHAUN ALEXANDER
CHECKED BY	
FUNCTIONAL SUPERVISOR	AL TRUJILLO

STATE OF CALIFORNIA - DEPARTMENT OF TRANSPORTATION
Caltrans **DESIGN**

P:\proj1\02\4E890_plans\pse\24e890ka001.dgn

LAST REVISION 03-26-15 | DATE PLOTTED => 30-MAR-2015 | TIME PLOTTED => 09:29

Dist	COUNTY	ROUTE	POST MILES TOTAL PROJECT	SHEET No.	TOTAL SHEETS
02	Sha	299	47.5/48.1	30	64

Shaun Alexander 03-26-15
REGISTERED CIVIL ENGINEER DATE

03-26-15
PLANS APPROVAL DATE

REGISTERED PROFESSIONAL ENGINEER SHAUN ALEXANDER No. 70833 Exp. 6-30-15 STATE OF CALIFORNIA

THE STATE OF CALIFORNIA OR ITS OFFICERS OR AGENTS SHALL NOT BE RESPONSIBLE FOR THE ACCURACY OR COMPLETENESS OF ELECTRONIC COPIES OF THIS PLAN SHEET.

NOTE:

1. FOR ACCURATE RIGHT OF WAY DATA, CONTACT RIGHT OF WAY ENGINEERING AT THE DISTRICT OFFICE.

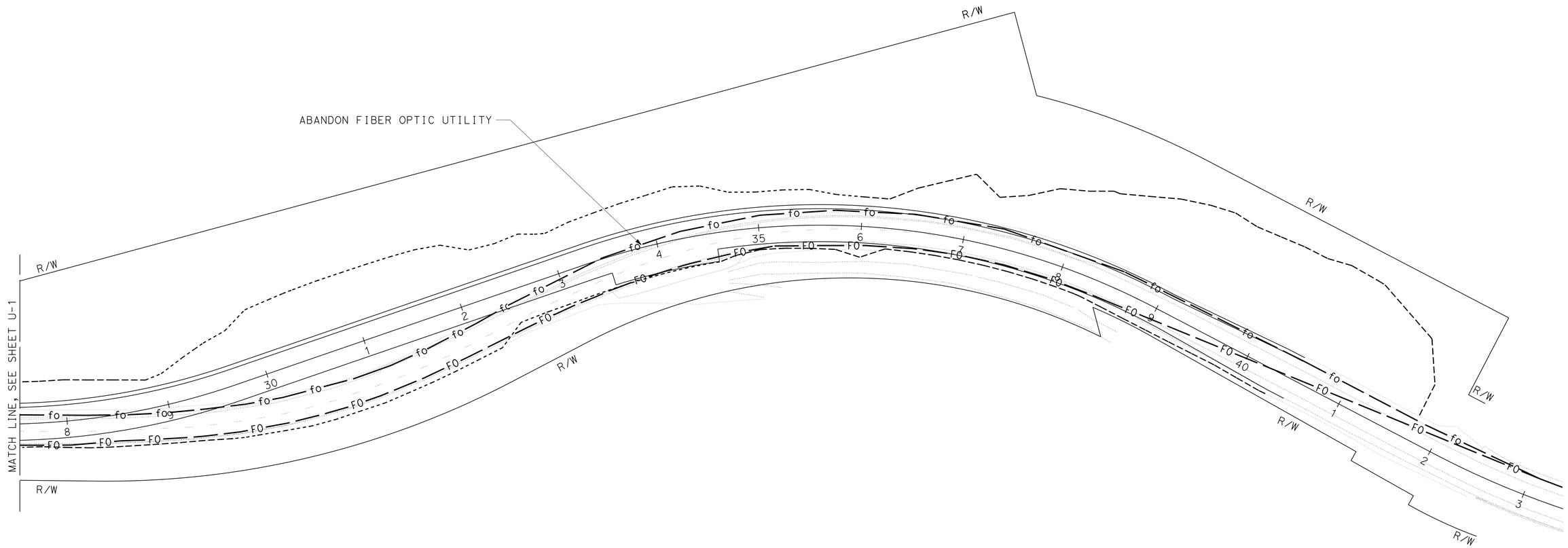

UTILITY PLAN

SCALE: 1" = 50'

U-2

APPROVED FOR UTILITY WORK ONLY

REVISED BY | DATE REVISED

BILL LEHMAN | SHAUN ALEXANDER

CALCULATED-DESIGNED BY | CHECKED BY

FUNCTIONAL SUPERVISOR: AL TRUJILLO

STATE OF CALIFORNIA - DEPARTMENT OF TRANSPORTATION

Caltrans DESIGN

P:\proj1\02\4E890_plans\pse\24e890ka002.dgn

LAST REVISION 03-26-15 | DATE PLOTTED => 30-MAR-2015 TIME PLOTTED => 09:29

Dist	COUNTY	ROUTE	POST MILES TOTAL PROJECT	SHEET No.	TOTAL SHEETS
02	Sha	299	47.5/48.1	31	64

REGISTERED CIVIL ENGINEER DATE 03-26-15

PLANS APPROVAL DATE 03-26-15

REGISTERED PROFESSIONAL ENGINEER SHAUN ALEXANDER No. 70833 Exp. 6-30-15 STATE OF CALIFORNIA

THE STATE OF CALIFORNIA OR ITS OFFICERS OR AGENTS SHALL NOT BE RESPONSIBLE FOR THE ACCURACY OR COMPLETENESS OF ELECTRONIC COPIES OF THIS PLAN SHEET.

NOTE:

1. EXACT SIGN LOCATIONS TO BE DETERMINED BY THE ENGINEER.

LEGEND:

SIGN ON WOOD POST

DIRECTION OF TRAVEL

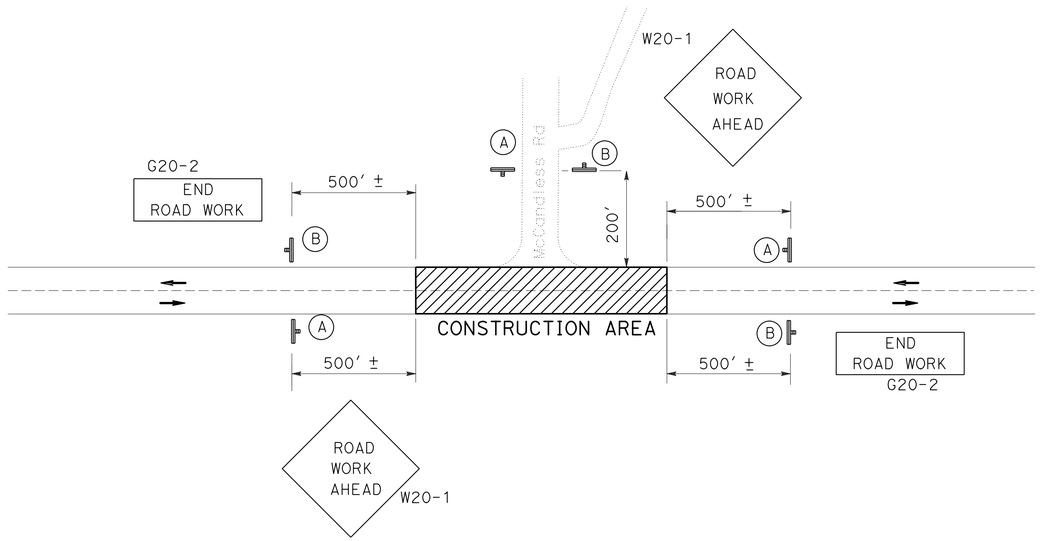

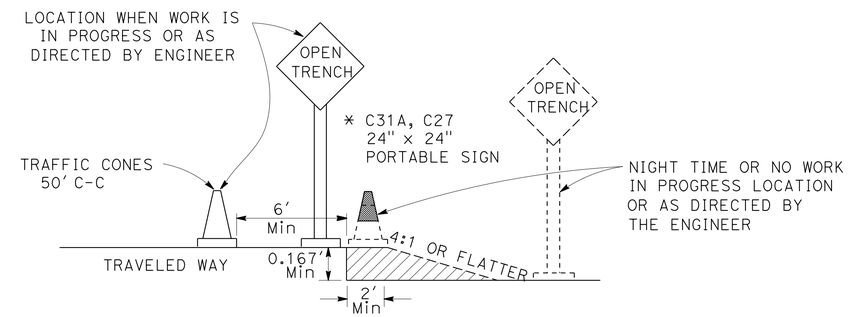

OPEN TRENCH SIGNING AND MARKING

* THE OPEN TRENCH AREA ALTERNATE C27 (OPEN TRENCH) AND C31A (NO SHOULDER) SIGNS PLACE AT 500' INTERVALS THROUGH THE LIMITS OF THE PROJECT

STATIONARY MOUNTED CONSTRUCTION AREA SIGNS

SIGN No.	SIGN CODE	PANEL SIZE	SIGN MESSAGE	No. AND SIZE OF POSTS	EACH
A	W20-1	48" x 48"	ROAD WORK AHEAD	1 - 4" x 6"	3
	C23B (CA)	36" x 18"	HIGHWAY REALIGNMENT		
B	G20-2	36" x 18"	END ROAD WORK	1 - 4" x 4"	3
TOTAL					6

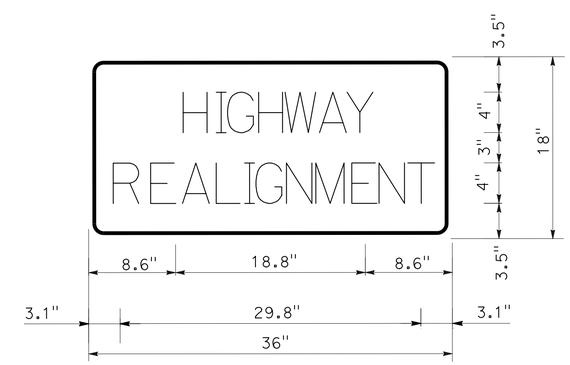

SIGN DETAIL C23B (CA)

1.5" RADIUS, 0.4" BORDER, 0.4" INDENT, BLACK ON ORANGE; [HIGHWAY] C; [REALIGNMENT] C;

CONSTRUCTION AREA SIGNS

NO SCALE

CS-1

REVISED BY | DATE REVISED

BILL LEHMAN | SHAUN ALEXANDER

CALCULATED-DESIGNED BY | CHECKED BY

FUNCTIONAL SUPERVISOR: AL TRUJILLO

STATE OF CALIFORNIA - DEPARTMENT OF TRANSPORTATION

Caltrans DESIGN

P:\proj1\02\4E890_plans\pse\24e8901a001.dgn

LAST REVISION 03-26-15 | DATE PLOTTED => 30-MAR-2015 | TIME PLOTTED => 09:29

Dist	COUNTY	ROUTE	POST MILES TOTAL PROJECT	SHEET No.	TOTAL SHEETS
02	Sha	299	47.5/48.1	32	64

Shaun Alexander 03-26-15
REGISTERED CIVIL ENGINEER DATE

03-26-15
PLANS APPROVAL DATE

REGISTERED PROFESSIONAL ENGINEER
SHAUN ALEXANDER
No. 70833
Exp. 6-30-15
STATE OF CALIFORNIA

THE STATE OF CALIFORNIA OR ITS OFFICERS OR AGENTS SHALL NOT BE RESPONSIBLE FOR THE ACCURACY OR COMPLETENESS OF ELECTRONIC COPIES OF THIS PLAN SHEET.

LEGEND:

- SINGLE STRIPE MARKER
- STRIPE CHANGE LOCATION
- MILEPOST MARKER
- OBJECT MARKER (TYPE P)
- DELINEATOR (CLASS 2)
- REMOVE ROADSIDE SIGN
- RELOCATE ROADSIDE SIGN
- MARKER (CULVERT)
- DELINEATOR (TYPE F)
- OBJECT MARKER (TYPE L-1)
- EXISTING ROADSIDE SIGN (ONE POST)
- EXISTING ROADSIDE SIGN (TWO POST)
- ROADSIDE SIGN (ONE POST)
- X-X ROADSIDE SIGN
- XX PAVEMENT DELINEATION STRIPE DETAIL No.

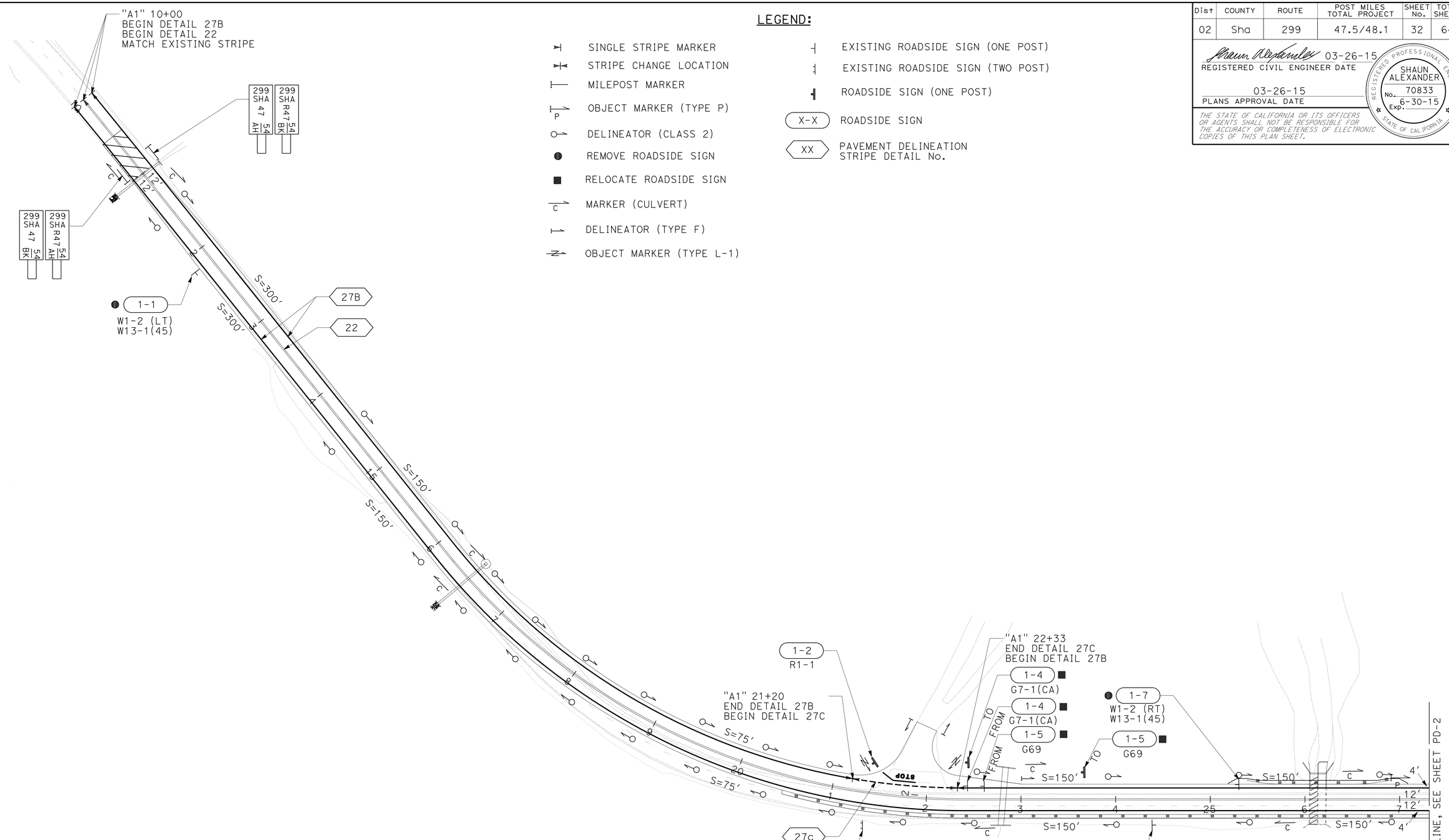

PAVEMENT DELINEATION AND SIGN PLAN

SCALE: 1" = 50'

PD-1

APPROVED FOR PAVEMENT DELINEATION AND SIGN WORK ONLY

REVISED BY	DATE REVISED
BILL LEHMAN	SHAUN ALEXANDER
CALCULATED-DESIGNED BY	CHECKED BY
FUNCTIONAL SUPERVISOR	AL TRUJILLO

STATE OF CALIFORNIA - DEPARTMENT OF TRANSPORTATION
Caltrans **DESIGN**

P:\proj1\02\4E890_plans\pse\24e890na001.dgn

LAST REVISION 03-26-15
DATE PLOTTED => 30-MAR-2015
TIME PLOTTED => 09:29

Dist	COUNTY	ROUTE	POST MILES TOTAL PROJECT	SHEET No.	TOTAL SHEETS
02	Sha	299	47.5/48.1	33	64

Shaun Alexander 03-26-15
REGISTERED CIVIL ENGINEER DATE

03-26-15
PLANS APPROVAL DATE

REGISTERED PROFESSIONAL ENGINEER
SHAUN ALEXANDER
No. 70833
Exp. 6-30-15
STATE OF CALIFORNIA

THE STATE OF CALIFORNIA OR ITS OFFICERS OR AGENTS SHALL NOT BE RESPONSIBLE FOR THE ACCURACY OR COMPLETENESS OF ELECTRONIC COPIES OF THIS PLAN SHEET.

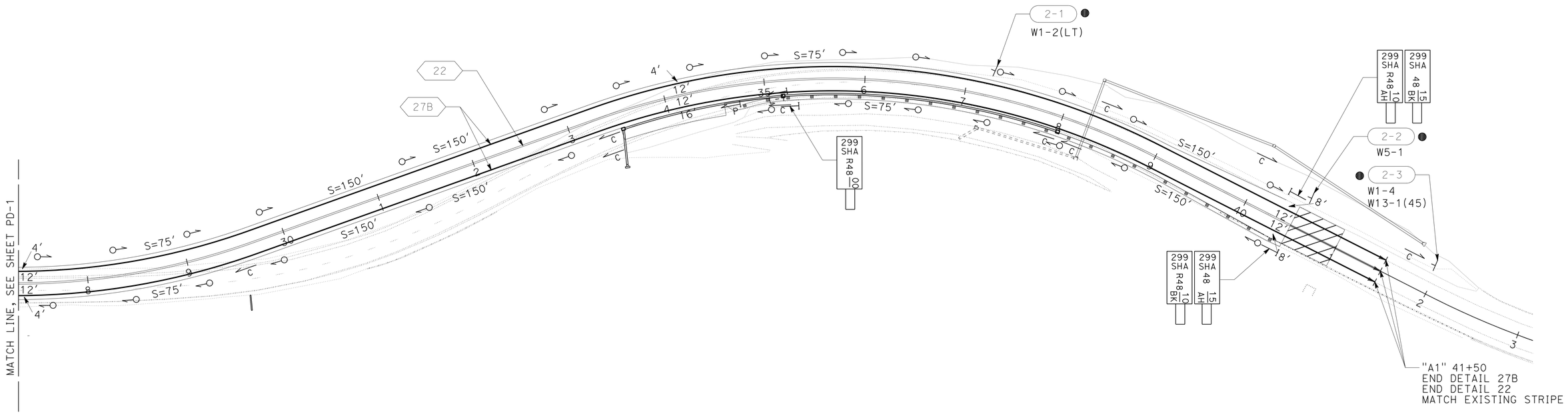

PAVEMENT DELINEATION AND SIGN PLAN

SCALE: 1" = 50′

PD-2

APPROVED FOR PAVEMENT DELINEATION AND SIGN WORK ONLY

CALCULATED-DESIGNED BY	BILL LEHMAN	REVISED BY
CHECKED BY	SHAUN ALEXANDER	DATE REVISED

FUNCTIONAL SUPERVISOR: AL TRUJILLO

STATE OF CALIFORNIA - DEPARTMENT OF TRANSPORTATION
Caltrans **DESIGN**

P:\proj1\02\4E890_plans\pse\24e890na002.dgn

LAST REVISION 03-26-15 | DATE PLOTTED => 30-MAR-2015 | TIME PLOTTED => 09:29

Dist	COUNTY	ROUTE	POST MILES TOTAL PROJECT	SHEET No.	TOTAL SHEETS
02	Sha	299	47.5/48.1	34	64

REGISTERED CIVIL ENGINEER DATE 03-26-15

PLANS APPROVAL DATE 03-26-15

REGISTERED PROFESSIONAL ENGINEER SHAUN ALEXANDER No. 70833 Exp. 6-30-15 STATE OF CALIFORNIA

THE STATE OF CALIFORNIA OR ITS OFFICERS OR AGENTS SHALL NOT BE RESPONSIBLE FOR THE ACCURACY OR COMPLETENESS OF ELECTRONIC COPIES OF THIS PLAN SHEET.

NOTES:

1. USE A 2¼" SQUARE TUBE x 30" LONG, 3/16" THICK ANCHOR FOR 2" POSTS. USE A 3" SQUARE TUBE x 3' LONG, 3/16" THICK ANCHOR FOR 2-1/2 " POSTS.
2. USE A 5/16" CORNER BOLT OR TWO DRIVE RIVETS TO FASTEN ASSEMBLED SIGN AND POST INTO ANCHOR. INSTALL CORNER BOLT OR DRIVE RIVETS INTO THE SIDES FACING TRAFFIC.
3. REMOVE EXISTING AC OR PCC, DRIVE ANCHOR SLEEVE INTO SOIL AND RECAP WITH LIKE MATERIAL, MATCHING EXISTING THICKNESS.
4. 2" POSTS ARE TO BE 1/8" THICK, PERFORATIONS OF 7/16" IN DIAMETER ARE 1" ON CENTER ON ALL SIDES, LENGTHS ARE 10' AND 12'.
5. 2-1/2" POSTS ARE TO BE 1/8" THICK, PERFORATIONS OF 7/16" IN DIAMETER ARE 1" ON CENTER ON ALL SIDES, 2-1/2" POSTS ARE 12' AND 14' IN LENGTH.
6. FOR DETAILS NOT SHOWN, REFER TO THE STANDARD PLANS.
7. ALL ANCHOR SLEEVES SHALL BE EMBEDDED IN MINOR CONCRETE.
8. THE MARKER SHALL BE WHITE (NON-REFLECTIVE) TARGET PLATE WITH BLACK SERIES D NUMERALS AND LETTERS.
9. A POST MILE PREFIX, SUCH AS "R", SHALL APPLY ONLY WHEN DIRECTED BY THE ENGINEER.
10. "BK" (BACK), "AH" (AHEAD), OR A BLANK SPACE SHALL APPLY AS DIRECTED BY THE ENGINEER.
11. ALL INFORMATION SHALL BE IN ENGLISH UNITS (MILES).

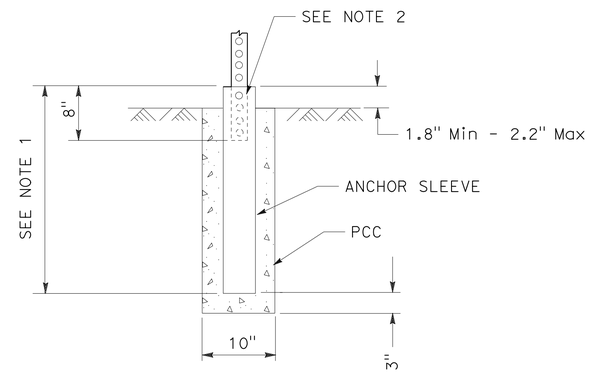

INSTALLATION IN SOIL (PCC)
(SEE NOTE 7)

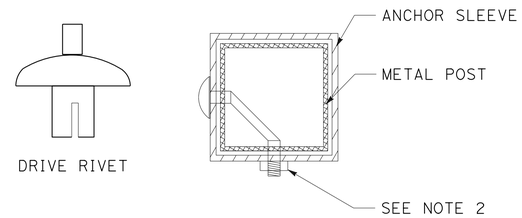

FASTENER DETAILS

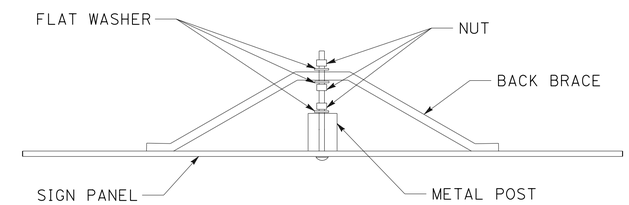

BACK BRACE MOUNTING DETAIL

METAL SIGN POST INSTALLATION DETAILS

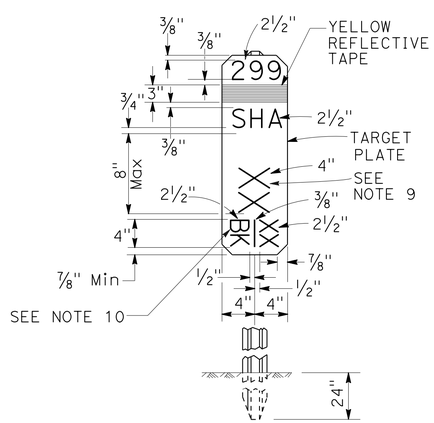

FRONT

BACK

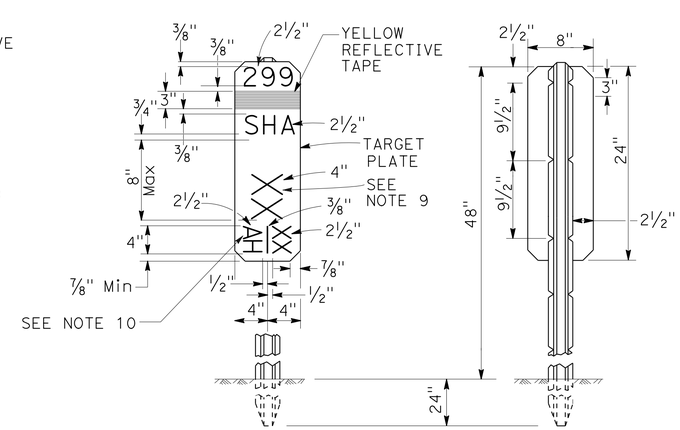

FRONT

REAR

AHEAD

MILEPOST MARKER DETAIL

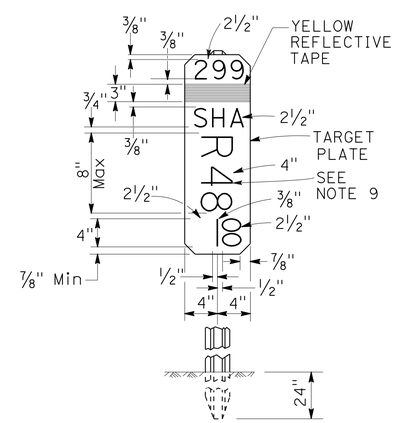

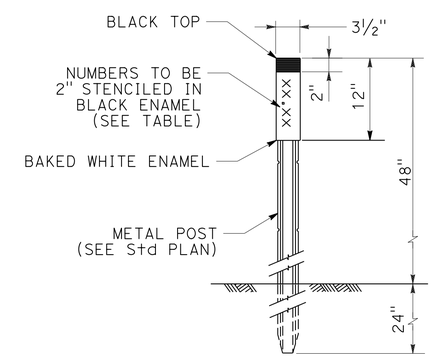

CULVERT MARKER

PAVEMENT DELINEATION AND SIGN DETAILS

NO SCALE

PDD-1

REVISED BY	DATE REVISED

CALCULATED-DESIGNED BY: BILL LEHMAN — CHECKED BY: SHAUN ALEXANDER

FUNCTIONAL SUPERVISOR: AL TRUJILLO

STATE OF CALIFORNIA - DEPARTMENT OF TRANSPORTATION — DESIGN

Caltrans

P:\proj1\02\4E890_plans\pse\24e890nb001.dgn

LAST REVISION 03-26-15 | DATE PLOTTED => 30-MAR-2015 | TIME PLOTTED => 09:29

Dist	COUNTY	ROUTE	POST MILES TOTAL PROJECT	SHEET No.	TOTAL SHEETS
02	Sha	299	47.5/48.1	35	64

Shaun Alexander 03-26-15
REGISTERED CIVIL ENGINEER DATE

03-26-15
PLANS APPROVAL DATE

REGISTERED PROFESSIONAL ENGINEER
SHAUN ALEXANDER
No. 70833
Exp. 6-30-15
STATE OF CALIFORNIA

THE STATE OF CALIFORNIA OR ITS OFFICERS OR AGENTS SHALL NOT BE RESPONSIBLE FOR THE ACCURACY OR COMPLETENESS OF ELECTRONIC COPIES OF THIS PLAN SHEET.

MARKERS AND DELINEATORS

SHEET	DELINEATOR (CLASS 2)		MARKER (CULVERT)	MILEPOST MARKER	OBJECT MARKER (TYPE P)	OBJECT MARKER (TYPE L-1)
	TYPE E	TYPE F				
	EA	EA	EA	EA	EA	EA
PD-1	29	3	8	4	1	2
PD-2	28		9	5	1	
TOTAL	60		17	9	2	2

PAVEMENT MARKING

SHEET	STATION	THERMOPLASTIC PAVEMENT MARKING	DESCRIPTION
		SQFT	
PD-1	"A1" 21+65.5 TO 21+87.7	22	"STOP"
	"A1" 21+50.8 TO 21+87.5	38	LIMIT LINE
	TOTAL	60	

PAVEMENT DELINEATION QUANTITIES

STATION "A1" LINE	THERMOPLASTIC TRAFFIC STRIPE (SPRAYABLE)			PAVEMENT MARKER (RETROREFLECTIVE-RECESSED)
	DETAIL 22	DETAIL 27B	DETAIL 27C	TYPE D
	LF	LF	LF	EA
10+00 TO 21+20 L+		1120		
10+00 TO 41+50 R+		3150		
10+00 TO 41+50 CENTER	3150			256
21+20 TO 22+33 L+			113	
22+33 TO 41+50 L+		1917		
SUBTOTAL	3150	6187	113	256
TOTAL	9450			256

MARKER (CULVERT)

"A1" LINE Sta	PM	EA
11+02	R47.54	2
16+48	R47.65	1
16+50	R47.65	1
22+79	R47.77	1
22+85	R47.77	1
26+14	R47.83	2
29+50	R47.90	1
33+44	R47.97	1
33+52	R47.97	1
35+18	R48.00	1
38+00	R48.05	1
38+26	R48.06	2
40+00	R48.09	1
41+75	48.17	1
	TOTAL	17

MILEPOST MARKER DETAIL

STATION	POST MILE	QUANTITY
11+00	47.54	2
	R47.54	2
35+10	R48.00	1
40+50	R48.10	2
	48.15	2
	TOTAL	9

PAVEMENT DELINEATION QUANTITIES

PDQ-1

REVISED BY | DATE REVISED
BILL LEHMAN | SHAUN ALEXANDER
CALCULATED-DESIGNED BY | CHECKED BY
FUNCTIONAL SUPERVISOR
AL TRUJILLO

STATE OF CALIFORNIA - DEPARTMENT OF TRANSPORTATION
Caltrans
DESIGN

P:\proj1\02\4E890_plans\pse\24e890nc001.dgn

LAST REVISION 03-26-15
DATE PLOTTED => 30-MAR-2015
TIME PLOTTED => 09:29

Dist	COUNTY	ROUTE	POST MILES TOTAL PROJECT	SHEET No.	TOTAL SHEETS
02	Sha	299	47.5/48.1	36	64

Shaun Alexander 03-26-15
REGISTERED CIVIL ENGINEER DATE

03-26-15
PLANS APPROVAL DATE

REGISTERED PROFESSIONAL ENGINEER SHAUN ALEXANDER No. 70833 Exp. 6-30-15 STATE OF CALIFORNIA

THE STATE OF CALIFORNIA OR ITS OFFICERS OR AGENTS SHALL NOT BE RESPONSIBLE FOR THE ACCURACY OR COMPLETENESS OF ELECTRONIC COPIES OF THIS PLAN SHEET.

NOTES:

1. TURNABLE SIGN BASE TO BE DEPARTMENT FURNISHED. SEE SIGN DETAILS.
2. (N) - NOT A SEPARATE PAY ITEM, FOR INFORMATION ONLY

ABBREVIATIONS

FYG FLUORESCENT YELLOW GREEN

MATERIAL SUMMARY CONTRACTOR FURNISHED SIGNS

SHEET No.	SIGN No.	(N) SIGN CODE	(N) SIGN SIZE (L x D)	(N) SINGLE FACED	BACKGROUND (N) SHEETING COLOR	BACKGROUND (N) RETROREFLECTIVE ASTM TYPE	LEGEND (N) SHEETING COLOR	LEGEND (N) RETROREFLECTIVE ASTM TYPE	FURNISH SINGLE SHEET ALUMINUM SIGN (0.080"-UNFRAMED) SQFT 0.080"	DESCRIPTION (REMARKS)
PD-1	1-2	R1-1	30" x 30"	X	RED	III	WHITE	III	6.3	STOP

ROADSIDE SIGNS

SHEET No.	SIGN No.	SIGN CODE	(N) PANEL SIZE	(N) POST LENGTH LF	(N) POST SIZE METAL POST	ROADSIDE SIGN ONE POST EA	REMOVE ROADSIDE SIGN EA	RELOCATE ROADSIDE SIGN-ONE POST EA	REMARKS
PD-1	1-1	W1-2 W13-1					1		LEFT CURVE 45 MPH
	1-2	R1-1	30" x 30"	10	2.5" x 2.5"	1			STOP
	1-3	W1-2					1		RIGHT CURVE 45 MPH
	1-4	G7-1(CA)						1	McCANDLESS Rd
	1-5	G69						1	PASSING LANE 2 MILES
	1-6	W1-4 W13-1(45)					1		S-CURVE 45 MPH
	1-7	W1-2(RT) W13-1(45)					1		RIGHT CURVE 45MPH
PD-2	2-1	W1-2(LT)					1		LEFT CURVE
	2-2	W5-1					1		ROAD NARROWS
	2-3	W1-4 W13-1(45)					1		S-CURVE 45 MPH
TOTAL						1	7	2	

SIGN QUANTITIES

SQ-1

REVISED BY | DATE REVISED
BILL LEHMAN | SHAUN ALEXANDER
CALCULATED-DESIGNED BY | CHECKED BY
FUNCTIONAL SUPERVISOR | AL TRUJILLO

STATE OF CALIFORNIA - DEPARTMENT OF TRANSPORTATION
Caltrans DESIGN

P:\proj\02\4E890_plans\pse\24e890oc001.dgn

LAST REVISION 03-26-15 | DATE PLOTTED => 30-MAR-2015 | TIME PLOTTED => 09:29

Dist	COUNTY	ROUTE	POST MILES TOTAL PROJECT	SHEET No.	TOTAL SHEETS
02	Sha	299	47.5/48.1	37	64

Shaun Alexander 03-26-15
REGISTERED CIVIL ENGINEER DATE

03-26-15
PLANS APPROVAL DATE

REGISTERED PROFESSIONAL ENGINEER SHAUN ALEXANDER No. 70833 Exp. 6-30-15 STATE OF CALIFORNIA

THE STATE OF CALIFORNIA OR ITS OFFICERS OR AGENTS SHALL NOT BE RESPONSIBLE FOR THE ACCURACY OR COMPLETENESS OF ELECTRONIC COPIES OF THIS PLAN SHEET.

NOTE:

1. (N) - NOT A SEPARATE PAY ITEM, FOR INFORMATION ONLY

TEMPORARY WATER POLLUTION CONTROL

	RAIN EVENT ACTION PLAN	STORM WATER SAMPLING AND ANALYSIS DAY	STORM WATER ANNUAL REPORT	TEMPORARY FIBER ROLL	TEMPORARY CHECK DAM	TEMPORARY DRAINAGE INLET PROTECTION	TEMPORARY SILT FENCE
	EA	EA	EA	LF	LF	EA	LF
TOTAL	3	5	1	625	750	6	2400

GUARDRAIL

STATION	L+/R+	REMOVE GUARDRAIL	MIDWEST GUARDRAIL SYSTEM (STEEL POST)	VEGETATION CONTROL (MINOR CONCRETE)	TRANSITION RAILING (TYPE WB-31)	ALTERNATIVE IN-LINE TERMINAL SYSTEM	ALTERNATIVE FLARED TERMINAL SYSTEM
		LF	LF	SQYD	EA	EA	EA
"A1" 20+50 TO 29+50	R+			404			
"A1" 21+00 TO 29+00	R+		812.5				
"A1" 25+19.2 TO 27+08.5	L+			90			
"A1" 25+32.5 TO 26+94.9	L+		162.5				
"A1" 34+13.9 TO 42+37.9	R+		750				
"A1" 34+57.7 TO 42+62.3	R+			351			
"A1" 39+80.5 TO 42+62.3	R+	282			1		
"A1" 21+00	R+					1	
"A1" 25+32.5	L+						1
"A1" 26+94.9	L+						1
"A1" 29+00	R+					1	
"A1" 35+13.9	R+						1
TOTAL		282	1725	845	1	2	3

TEMPORARY FENCE (TYPE ESA)

STATION	L+/R+	Temp FENCE (TYPE ESA)
		LF
"A1" 10+00.0 TO 18+09.2	R+	890.7
"A1" 18+24.6 TO 18+74.4	R+	53.2
"A1" 25+01.7 TO 25+73.0	R+	77.9
"A1" 25+88.6 TO 26+18.3	L+	29.6
"A1" 26+25.9 TO 26+35.5	L+	9.6
"A1" 26+39.5 TO 28+01.4	R+	167.1
TOTAL		1228.1

TREATED WOOD WASTE

STATION	TREATED WOOD WASTE
	LB
"A1" 11+00 TO 42+62.3	4000

SUMMARY OF QUANTITIES

STATION	COLD PLANE ASPHALT CONCRETE PAVEMENT	ROADWAY EXCAVATION	(N) EMBANKMENT	SHOULDER BACKING	CLASS 2 AGGREGATE BASE	HOT MIX ASPHALT (TYPE A)	PLACE HMA DIKE (TYPE C)	PLACE HMA DIKE (TYPE F)	TACK COAT	RAIL ELEMENT WALL	COMMENTS
	SQYD	CY	CY	TON	CY	TON	LF	LF	TON	SQFT	
"A1" 10+00 TO 11+00			38								
"A1" 10+50 TO 11+00	144					20			0.04		CONFORM
"A1" 11+00 L+ TO 21+16 L+					28	19					SAFETY EDGE
"A1" 11+00 L+ TO "B1" 11+25 R+				151							
"B1" 11+25 L+ TO "A1" 24+75 L+				42							
"A1" 11+00 R+ TO 20+50 R+				131	27	18					SAFETY EDGE
"A1" 11+00 TO 40+50		34,339	10,991		2679	3978			2.67		
"A1" 23+04 L+ TO 24+75 L+					5	3					SAFETY EDGE
"A1" 27+52 L+ TO 40+50 L+				177	37	25					SAFETY EDGE
"A1" 29+50 R+ TO 33+50 R+				55	11	8					SAFETY EDGE
"A1" 34+58 R+ TO 35+14 R+						0.5	54.9				TYPE C DIKE
"A1" 35+14 R+ TO 40+50 R+						7.2		526.6			TYPE F DIKE
"A1" 35+90.8 R+ TO 40+50 R+										900	
"A1" 40+50 TO 41+00	225					31			0.06		CONFORM
"A1" 40+50 TO 41+75			2757								
"B1" 11+25 TO 12+03		1045	125		84	125			0.09		
						9					FROM DRAINAGE QUANTITIES
TOTAL	369	35,384	13,911	556	2871	4244	54.9	526.6	2.86	900	

SAFETY EDGE

STATION	L+/R+	(N) SAFETY EDGE
		LF
"A1" 11+00 TO 21+16	L+	1016
"A1" 11+00 TO 20+50	R+	962
"A1" 23+04 TO 24+75	L+	172
"A1" 27+52 TO 40+50	L+	1286
"A1" 29+50 TO 33+50	R+	400

SUMMARY OF QUANTITIES

Q-1

REVISED BY | DATE REVISED
BILL LEHMAN | SHAUN ALEXANDER
CALCULATED-DESIGNED BY | CHECKED BY
FUNCTIONAL SUPERVISOR
AL TRUJILLO

STATE OF CALIFORNIA - DEPARTMENT OF TRANSPORTATION
Caltrans DESIGN

P:\proj1\02\4E890_plans\pse\24e890pa001.dgn

LAST REVISION 03-26-15 | DATE PLOTTED => 30-MAR-2015 | TIME PLOTTED => 09:29

Dist	COUNTY	ROUTE	POST MILES TOTAL PROJECT	SHEET No.	TOTAL SHEETS
02	Sha	299	47.5/48.1	38	64

Shaun Alexander 03-26-15
REGISTERED CIVIL ENGINEER DATE

03-26-15
PLANS APPROVAL DATE

REGISTERED PROFESSIONAL ENGINEER
SHAUN ALEXANDER
No. 70833
Exp. 6-30-15
STATE OF CALIFORNIA

THE STATE OF CALIFORNIA OR ITS OFFICERS OR AGENTS SHALL NOT BE RESPONSIBLE FOR THE ACCURACY OR COMPLETENESS OF ELECTRONIC COPIES OF THIS PLAN SHEET.

NOTES:

1. FOR ACCURATE RIGHT OF WAY DATA, CONTACT RIGHT OF WAY ENGINEERING AT THE DISTRICT OFFICE.
2. DISTURBED AREA MEASUREMENTS INCLUDE SLOPE FACTORS

LEGEND:

- HYDROSEED
- BONDED FIBER MATRIX
- FIBER ROLL

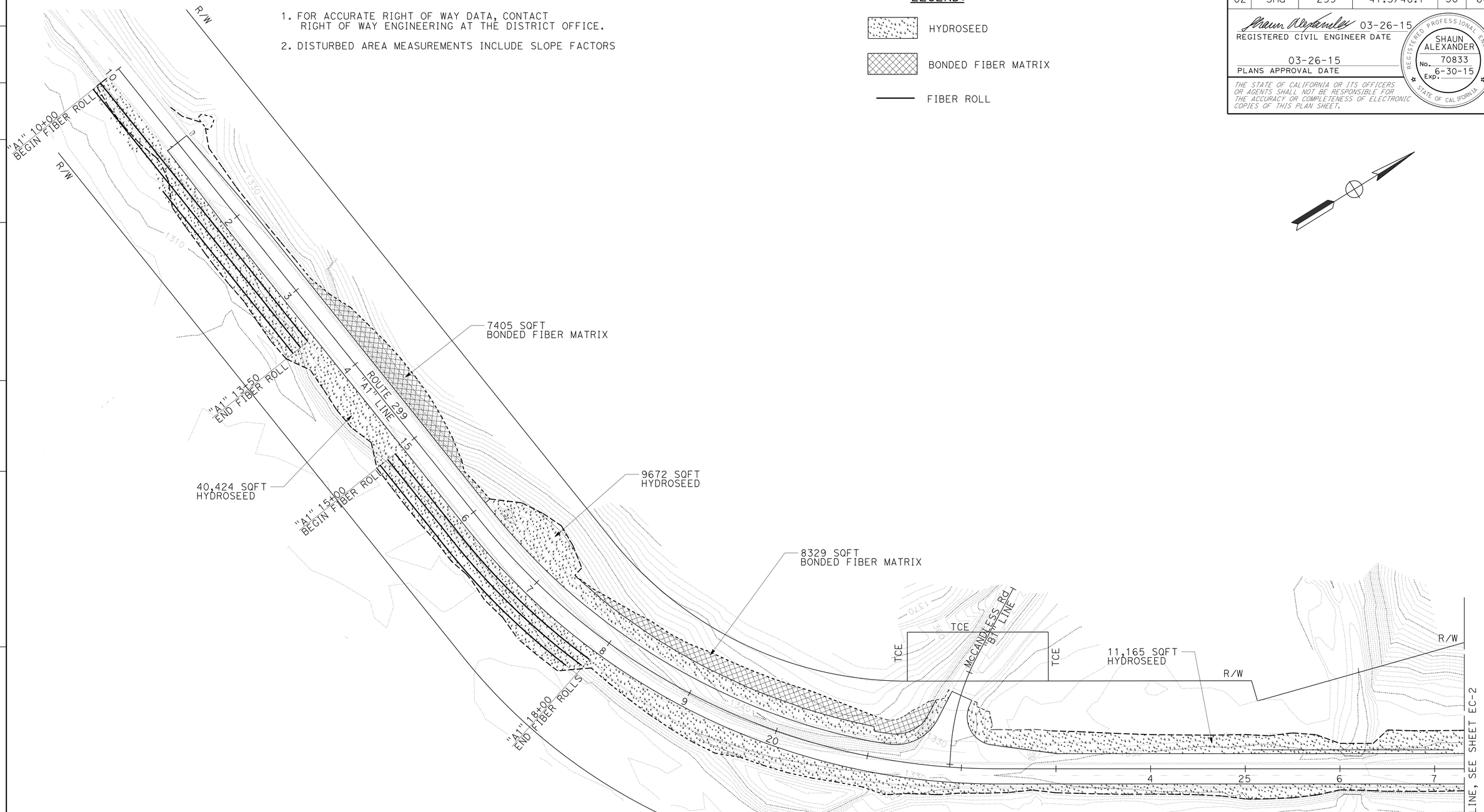

EROSION CONTROL PLAN

SCALE: 1" = 50'

EC-1

APPROVED FOR EROSION CONTROL WORK ONLY

STATE OF CALIFORNIA - DEPARTMENT OF TRANSPORTATION
Caltrans **DESIGN**

FUNCTIONAL SUPERVISOR: AL TRUJILLO
CALCULATED-DESIGNED BY: BILL LEHMAN
CHECKED BY: SHAUN ALEXANDER
REVISED BY / DATE REVISED

P:\proj1\02\4E890_plans\pse\24e890te001.dgn

LAST REVISION 03-26-15 | DATE PLOTTED => 30-MAR-2015 | TIME PLOTTED => 09:29

BORDER LAST REVISED 7/2/2010 | USERNAME => s115152 | DGN FILE => 24e890te001.dgn | RELATIVE BORDER SCALE IS IN INCHES 0 1 2 3 | UNIT 0316 | PROJECT NUMBER & PHASE 0212000062-1 | EA 02-4E8901

Dist	COUNTY	ROUTE	POST MILES TOTAL PROJECT	SHEET No.	TOTAL SHEETS
02	Sha	299	47.5/48.1	39	64

Shaun Alexander 03-26-15
REGISTERED CIVIL ENGINEER DATE

03-26-15
PLANS APPROVAL DATE

REGISTERED PROFESSIONAL ENGINEER
SHAUN ALEXANDER
No. 70833
Exp. 6-30-15
STATE OF CALIFORNIA

THE STATE OF CALIFORNIA OR ITS OFFICERS OR AGENTS SHALL NOT BE RESPONSIBLE FOR THE ACCURACY OR COMPLETENESS OF ELECTRONIC COPIES OF THIS PLAN SHEET.

NOTE:

1. FOR ACCURATE RIGHT OF WAY DATA, CONTACT RIGHT OF WAY ENGINEERING AT THE DISTRICT OFFICE.

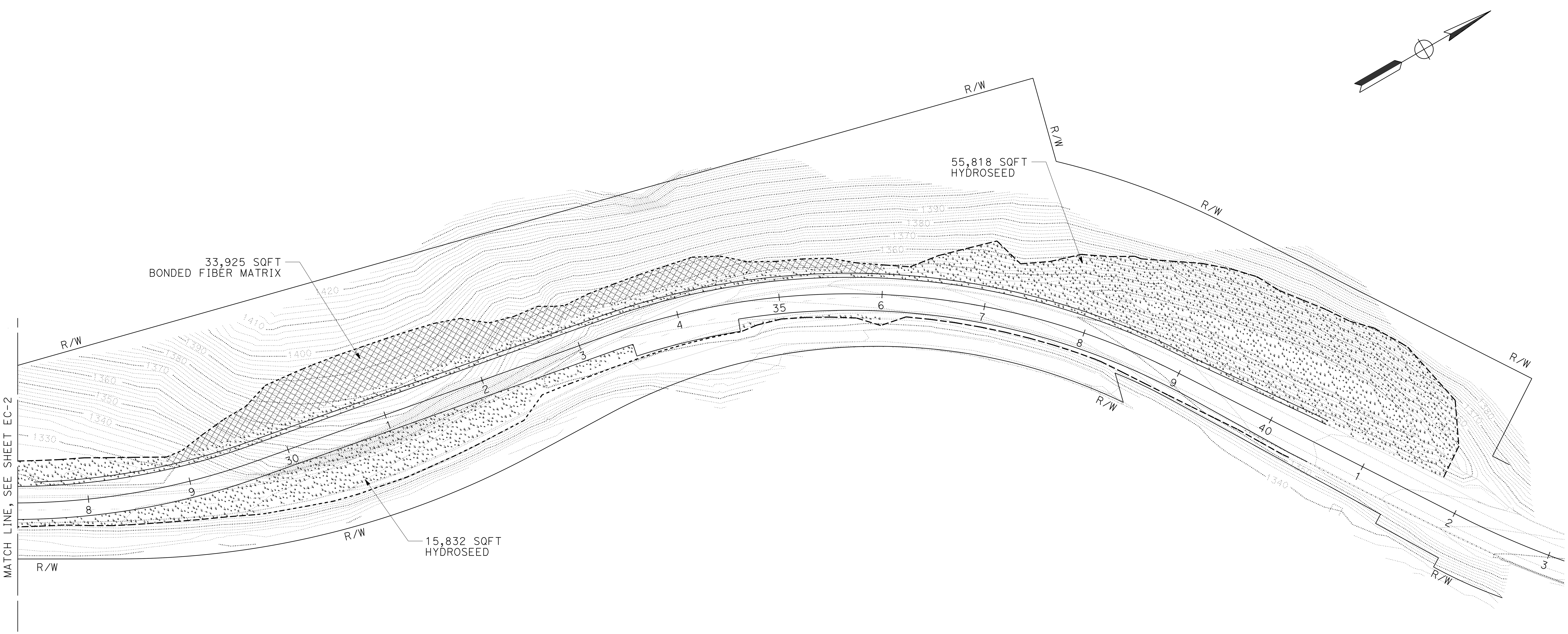

EROSION CONTROL PLAN

SCALE: 1" = 50'

EC-2

APPROVED FOR EROSION CONTROL WORK ONLY

REVISED BY | DATE REVISED
CALCULATED-DESIGNED BY: BILL LEHMAN
CHECKED BY: SHAUN ALEXANDER
FUNCTIONAL SUPERVISOR: AL TRUJILLO

STATE OF CALIFORNIA - DEPARTMENT OF TRANSPORTATION
Caltrans DESIGN

P:\proj1\02\4E890_plans\pse\24e890te002.dgn

LAST REVISION 03-26-15
DATE PLOTTED => 30-MAR-2015
TIME PLOTTED => 09:29

Dist	COUNTY	ROUTE	POST MILES TOTAL PROJECT	SHEET No.	TOTAL SHEETS
02	Sha	299	47.5/48.1	40	64

LICENSED LANDSCAPE ARCHITECT

03-26-15
PLANS APPROVAL DATE

LICENSED LANDSCAPE ARCHITECT J. PATRICK SULLIVAN #3125 Signature 07/31/16 Renewal Date 03/26/15 Date STATE OF CALIFORNIA

THE STATE OF CALIFORNIA OR ITS OFFICERS OR AGENTS SHALL NOT BE RESPONSIBLE FOR THE ACCURACY OR COMPLETENESS OF SCANNED COPIES OF THIS PLAN SHEET.

NOTES:

1. (N) - NOT A SEPARATE PAY ITEM, FOR INFORMATION ONLY
2. REFER TO INDIVIDUAL EC SHEETS FOR LOCATIONS, EC TYPES & QUANTITIES.
3. APPLY STRAW SUFFICIENTLY TO FULLY COVER SLOPES.
4. TOTAL HYDROSEEDING ACREAGE 4.2 ACRES (N)

BONDED FIBER MATRIX SEQUENCE/APPLICATION RATES (N)

SEQUENCE	ITEM	MATERIAL DESCRIPTION	MATERIAL TYPE	APPLICATION RATE (N)
STEP 1	BONDED FIBER MATRIX	PURE LIVE SEED	MIX	95 LB/ACRE
		FIBER	ALTERNATE	1400 LB/ACRE
		SLOW RELEASE FERTLIZER	GRANULAR	100 LB/ACRE
STEP 2	BONDED FIBER MATRIX	COMPOST	RECYCLED WOOD PRODUCTS	1.2 CY/ACRE
		FIBER	ALTERNATE	1200 LB/ACRE
STEP 3	BONDED FIBER MATRIX	FIBER	ALTERNATE	1400 LB/ACRE

BONDED FIBER MATRIX

MATERIAL DESCRIPTION	MATERIAL TYPE	TOTALS	(N)
PURE LIVE SEED	MIX	108.3 LB (N)	BONDED FIBER MATRIX
FIBER	ALTERNATE	2964 LB (N)	
SLOW RELEASE FERTLIZER	GRANULAR	114 LB (N)	
COMPOST	RECYCLED WOOD PRODUCTS	2.34 CY (N)	
FROM Sta "A-1" 10+00 TO 36+00		TOTAL SQFT	49,659

SEED MIX (N)

BOTANICAL NAME (COMMON NAME)	PERCENT GERMINATION (MINIMUM)	POUNDS PURE LIVE SEED PER ACRE (N) (SLOPE MEASUREMENT)
ACHILLEA MILLEFOLIUM (COMMON YARROW)	50	1
ESCHSCHOLZIA CALIFORNICA (CALIFORNIA POPPIES)	70	2
FESTUCA IDAHOENSIS (WESTERN FESCUE)	70	20
LOTUS PURSHIANUS (PURSHING)	70	10
LUPINUS BICOLOR (SKY LUPINES)	60	2
LUPINUS NANA (DWARF LUPINES)	60	2
POA SECUNDA (BLUE PINE GRASS)	60	15
TRIFOLIUM HIRTIUM (ROSE CLOVER)	80	13
VULPIA MICROSTACHYS (SMALL FESCUE)	80	30
TOTAL		95

HYDROSEED SEQUENCE/APPLICATION RATES (N)

SEQUENCE	ITEM	MATERIAL DESCRIPTION	MATERIAL TYPE	APPLICATION RATE (N)
STEP 1	HYDROSEED	PURE LIVE SEED	MIX	95 LB/ACRE
		FIBER	ALTERNATE	2000 LB/ACRE
		SLOW RELEASE FERTLIZER	GRANULAR	100 LB/ACRE
STEP 2	STRAW	STRAW	BARLEY/ WHEAT	4.5 TONS/ACRE
STEP 3	HYDROSEED	COMPOST	RECYCLED WOOD PRODUCTS	1.2 CY/ACRE
		FIBER	ALTERNATE	2000 LB/ACRE
		TACKIFIER	PSYLLIUM	100 LB/ACRE

FIBER ROLL

STATION	L+/R+	LF
"A1" 10+00 TO 13+50	R+	920
"A1" 15+00 TO 18+00	RT	890
	TOTAL	1810

EROSION CONTROL

LOCATION STATION	L+/R+	EROSION CONTROL (BONDED FIBER MATRIX) SQFT	HYDROSEED SQFT
"A1" 10+00 TO 36+00	R+		56,256
"A1" 13+00 TO 16+00	L+	7405	
"A1" 16+00 TO 21+75	L+		9672
"A1" 17+25 TO 21+75	L+	8329	
"A1" 22+00 TO 41+75	L+		66,983
"A1" 28+75 TO 36+00	L+	33,925	
	TOTAL	49,659	132,911

HYDROSEED

MATERIAL DESCRIPTION	MATERIAL TYPE	TOTALS
PURE LIVE SEED	MIX	399 LB (N)
FIBER	ALTERNATE	16,800 LB (N)
STRAW	BARLEY/ WHEAT	18.9 TONS (N)
SLOW RELEASE FERTLIZER	GRANULAR	420 LB (N)
COMPOST	RECYCLED WOOD PRODUCTS	5.04 CY (N)
TACKIFIER	PSYLLIUM	420 LB (N)
FROM Sta 10+00 TO 36+00		132,911 SQFT

EROSION CONTROL QUANTITIES

ECQ-1

REVISED BY | DATE REVISED
J. PATRICK SULLIVAN | RON FLORY
CALCULATED-DESIGNED BY | CHECKED BY
SENIOR LANDSCAPE ARCHITECT | RON FLORY
STATE OF CALIFORNIA - DEPARTMENT OF TRANSPORTATION
Caltrans LANDSCAPE ARCHITECTURE
P:\proj1\02\4E890_plans\pse\24e890tg001.dgn

LAST REVISION 03-26-15 | DATE PLOTTED => 30-MAR-2015 | TIME PLOTTED => 09:29

M

Maint	MAINTENANCE
Max	MAXIMUM
MB	METAL BEAM
MBB	METAL BEAM BARRIER
MBGR	METAL BEAM GUARD RAILING
Med	MEDIAN
MGS	MIDWEST GUARDRAIL SYSTEM
MH	MANHOLE
Min	MINIMUM
Misc	MISCELLANEOUS
Misc I & S	MISCELLANEOUS IRON AND STEEL
Mkr	MARKER
Mod	MODIFIED,
	MODIFY
Mon	MONUMENT
MP	METAL PLATE
MPGR	METAL PLATE GUARD RAILING
MR	MOVEMENT RATING
MSE	MECHANICALLY STABILIZED EMBANKMENT
Mt	MOUNTAIN, MOUNT
Mtl	MATERIAL
MVP	MAINTENANCE VEHICLE PULLOUT

N

N	NORTH
NB	NORTHBOUND
No.	NUMBER (MUST HAVE PERIOD)
Nos.	NUMBERS (MUST HAVE PERIOD)
NPS	NOMINAL PIPE SIZE
NS	NEAR SIDE
NSP	NEW STANDARD PLAN
NTS	NOT TO SCALE

O

Oblr	OBLITERATE
OC	OVERCROSSING
OD	OUTSIDE DIAMETER
OF	OUTSIDE FACE
OG	ORIGINAL GROUND
OGAC	OPEN GRADED ASPHALT CONCRETE
OGFC	OPEN GRADED FRICTION COURSE
OH	OVERHEAD
OHWM	ORDINARY HIGH WATER MARK
O-O	OUT TO OUT
Opp	OPPOSITE
OSD	OVERSIDE DRAIN

P

P	PAGE
PAP	PERFORATED ALUMINUM PIPE
PB	PULL BOX
PC	POINT OF CURVATURE,
	PRECAST
PCC	POINT OF COMPOUND CURVE,
	PORTLAND CEMENT CONCRETE
PCMS	PORTABLE CHANGEABLE MESSAGE SIGN
PCP	PERFORATED CONCRETE PIPE,
	PRESTRESSED CONCRETE PIPE
PCVC	POINT OF COMPOUND VERTICAL CURVE
PEC	PERMIT TO ENTER AND CONSTRUCT
Ped	PEDESTRIAN
Ped OC	PEDESTRIAN OVERCROSSING
Ped UC	PEDESTRIAN UNDERCROSSING
Perm Mtl	PERMEABLE MATERIAL

P continued

PG	PROFILE GRADE
PI	POINT OF INTERSECTION
PJP	PARTIAL JOINT PENETRATION
Pkwy	PARKWAY
ℙ,PL	PLATE
P/L	PROPERTY LINE
PM	POST MILE,
	TIME FROM NOON TO MIDNIGHT
PN	PAVING NOTCH
POC	POINT OF HORIZONTAL CURVE
POT	POINT OF TANGENT
POVC	POINT OF VERTICAL CURVE
PP	PIPE PILE,
	PLASTIC PIPE,
	POWER POLE
PPL	PREFORMED PERMEABLE LINER
PPP	PERFORATED PLASTIC PIPE
PRC	POINT OF REVERSE CURVE
PRF	PAVEMENT REINFORCING FABRIC
PRVC	POINT OF REVERSE VERTICAL CURVE
PS&E	PLANS, SPECIFICATIONS AND ESTIMATES
PS, P/S	PRESTRESSED
PSP	PERFORATED STEEL PIPE
PT	POINT OF TANGENCY
PVC	POLYVINYL CHLORIDE
Pvmt	PAVEMENT

Q

Qty	QUANTITY

R

R	RADIUS
R & D	REMOVE AND DISPOSE
R & S	REMOVE AND SALVAGE
R/C	RATE OF CHANGE
RCA	REINFORCED CONCRETE ARCH
RCB	REINFORCED CONCRETE BOX
RCP	REINFORCED CONCRETE PIPE
RCPA	REINFORCED CONCRETE PIPE ARCH
Rd	ROAD
Reinf	REINFORCED,
	REINFORCEMENT,
	REINFORCING
Rel	RELOCATE
Repl	REPLACEMENT
Ret	RETAINING
Rev	REVISED, REVISION
Rdwy	ROADWAY
RHMA	RUBBERIZED HOT MIX ASPHALT
Riv	RIVER
RM	ROAD-MIXED
RP	RADIUS POINT,
	REFERENCE POINT
RR	RAILROAD
RSP	ROCK SLOPE PROTECTION,
	REVISED STANDARD PLAN
Rt	RIGHT
Rte	ROUTE
RW	REDWOOD,
	RETAINING WALL
R/W	RIGHT OF WAY
Rwy	RAILWAY

S

S	SOUTH,
	SUPPLEMENT
SAE	STRUCTURE APPROACH EMBANKMENT
Salv	SALVAGE
SAPP	STRUCTURAL ALUMINUM PLATE PIPE
SB	SOUTHBOUND
SC	SAND CUSHION
SCSP	SLOTTED CORRUGATED STEEL PIPE
SD	STORM DRAIN
Sec	SECOND,
	SECTION
Sep	SEPARATION
SG	SUBGRADE
Shld	SHOULDER
Sht	SHEET
Sim	SIMILAR
℄	STATION LINE
SM	SELECTED MATERIAL
Spec	SPECIAL,
	SPECIFICATIONS
SPP	SLOTTED PLASTIC PIPE
SS	SLOPE STAKE
SSBM	STRAP AND SADDLE BRACKET METHOD
SSD	STRUCTURAL SECTION DRAIN
SSPA	STRUCTURAL STEEL PLATE ARCH
SSPP	STRUCTURAL STEEL PLATE PIPE
SSPPA	STRUCTURAL STEEL PLATE PIPE ARCH
SSRP	STEEL SPIRAL RIB PIPE
St	STREET
Sta	STATION
STBB	SINGLE THRIE BEAM BARRIER
Std	STANDARD
Str	STRUCTURE
Surf	SURFACING
SW	SIDEWALK,
	SOUND WALL
Swr	SEWER
Sym	SYMMETRICAL
S4S	SURFACE 4 SIDES

T

T	SEMI-TANGENT
Tan	TANGENT
TBB	THRIE BEAM BARRIER
Tbr	TIMBER
TC	TOP OF CURB
TCB	TRAFFIC CONTROL BOX
TCE	TEMPORARY CONSTRUCTION EASEMENT
Tel	TELEPHONE
Temp	TEMPORARY
TG	TOP OF GRADE
Tot	TOTAL
TP	TELEPHONE POLE
TPB	TREATED PERMEABLE BASE
TPM	TREATED PERMEABLE MATERIAL
Trans	TRANSITION

T continued

TS	TRANSVERSE,
	TRAFFIC SIGNAL,
	TUBULAR STEEL
Typ	TYPICAL

U

UC	UNDERCROSSING
UD	UNDERDRAIN
UG	UNDERGROUND
UON	UNLESS OTHERWISE NOTED
UP	UNDERPASS

V

V	VALVE,
	DESIGN SPEED
Var	VARIABLE,
	VARIES
VC	VERTICAL CURVE
VCP	VITRIFIED CLAY PIPE
Vert	VERTICAL
Via	VIADUCT
Vol	VOLUME

W

W	WEST,
	WIDTH
WB	WESTBOUND
WH	WEEP HOLE
WM	WIRE MESH
WS	WATER SURFACE
WSP	WELDED STEEL PIPE
Wt	WEIGHT
WV	WATER VALVE
WW	WINGWALL
WWLOL	WINGWALL LAYOUT LINE

X

X Sec	CROSS SECTION
Xing	CROSSING

Y

Yr	YEAR
Yrs	YEARS

Dist	COUNTY	ROUTE	POST MILES TOTAL PROJECT	SHEET No.	TOTAL SHEETS
02	Sha	299	47.5/48.1	41	64

Grace M. Tsushima
REGISTERED CIVIL ENGINEER

July 19, 2013
PLANS APPROVAL DATE

REGISTERED PROFESSIONAL ENGINEER Grace M. Tsushima No. C49814 Exp. 9-30-14 CIVIL STATE OF CALIFORNIA

THE STATE OF CALIFORNIA OR ITS OFFICERS OR AGENTS SHALL NOT BE RESPONSIBLE FOR THE ACCURACY OR COMPLETENESS OF SCANNED COPIES OF THIS PLAN SHEET.

TO ACCOMPANY PLANS DATED 03-26-15

UNIT OF MEASUREMENT SYMBOLS:

Some of the symbols used in the project plan quantity tables and in the Bid Item List are:

TABLE A

SYMBOL USED	DEFINITIONS
ACRE	ACRE
CF	CUBIC FOOT
CY	CUBIC YARD
EA	EACH
GAL	GALLON
LB	POUND
LF	LINEAR FOOT
SQFT	SQUARE FOOT
SQYD	SQUARE YARD
STA	100 FEET
TAB	TABLET
TON	2,000 POUNDS

Some of the symbols used in the plans other than in the project plan quantity tables are:

TABLE B

SYMBOL USED	DEFINITIONS
ksi	KIPS PER SQUARE INCH
ksf	KIPS PER SQUARE FOOT
psi	POUNDS PER SQUARE INCH
psf	POUNDS PER SQUARE FOOT
lb/ft^3, pcf	POUNDS PER CUBIC FOOT
tsf	TONS PER SQUARE FOOT
mph, MPH *	MILES PER HOUR
ø	NOMINAL DIAMETER
oz	OUNCE
lb	POUND
kip	1,000 POUNDS
cal	CALORIE
ft	FOOT OR FEET
gal	GALLON

* For use on a sign panel only

STATE OF CALIFORNIA
DEPARTMENT OF TRANSPORTATION

ABBREVIATIONS (SHEET 2 OF 2)

NO SCALE

RSP A10B DATED JULY 19, 2013 SUPERSEDES STANDARD PLAN A10B DATED MAY 20, 2011 - PAGE 2 OF THE STANDARD PLANS BOOK DATED 2010.

REVISED STANDARD PLAN RSP A10B

2010 REVISED STANDARD PLAN RSP A10B

DATE PLOTTED => 30-MAR-2015
TIME PLOTTED => 09:29

Dist	COUNTY	ROUTE	POST MILES TOTAL PROJECT	SHEET No.	TOTAL SHEETS
02	Sha	299	47.5/48.1	42	64

REGISTERED CIVIL ENGINEER

July 20, 2012
PLANS APPROVAL DATE

REGISTERED PROFESSIONAL ENGINEER
Roberta L. McLaughlin
No. C40375
Exp. 3-31-13
CIVIL
STATE OF CALIFORNIA

THE STATE OF CALIFORNIA OR ITS OFFICERS OR AGENTS SHALL NOT BE RESPONSIBLE FOR THE ACCURACY OR COMPLETENESS OF SCANNED COPIES OF THIS PLAN SHEET.

TO ACCOMPANY PLANS DATED 03-26-15

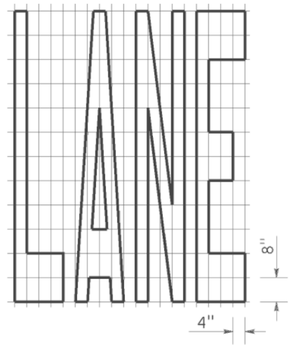

A=24 ft^2

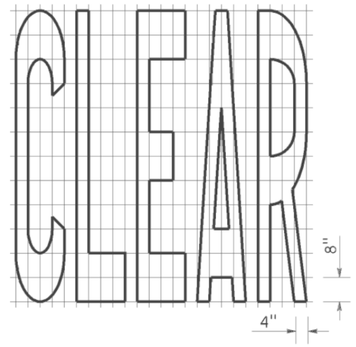

A=27 ft^2

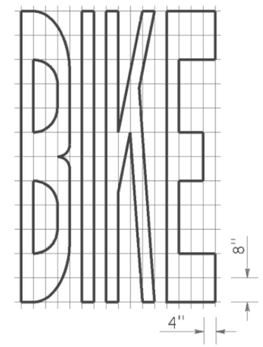

A=21 ft^2

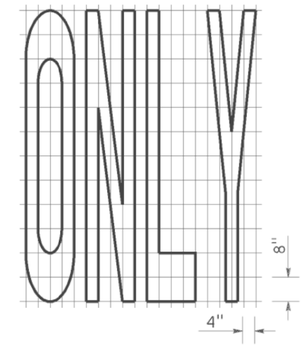

A=22 ft^2

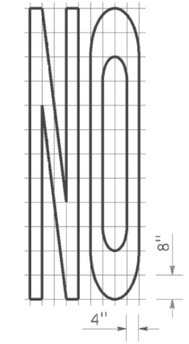

A=14 ft^2

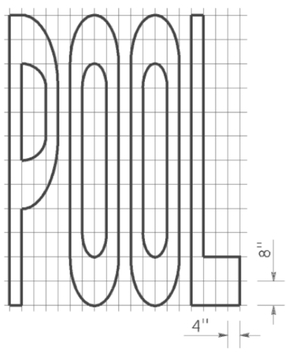

A=23 ft^2

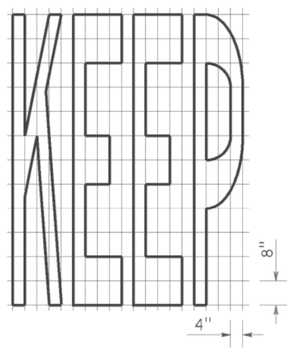

A=24 ft^2

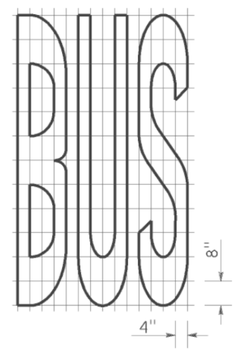

A=20 ft^2

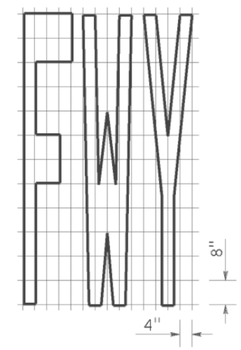

A=16 ft^2

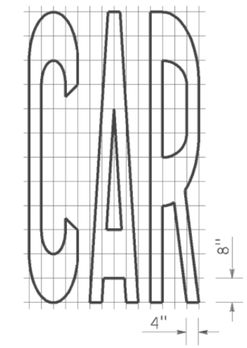

A=17 ft^2

WORD MARKINGS			
ITEM	ft^2	ITEM	ft^2
LANE	24	NO	14
POOL	23	BIKE	21
CAR	17	BUS	20
CLEAR	27	ONLY	22
KEEP	24	FWY	16

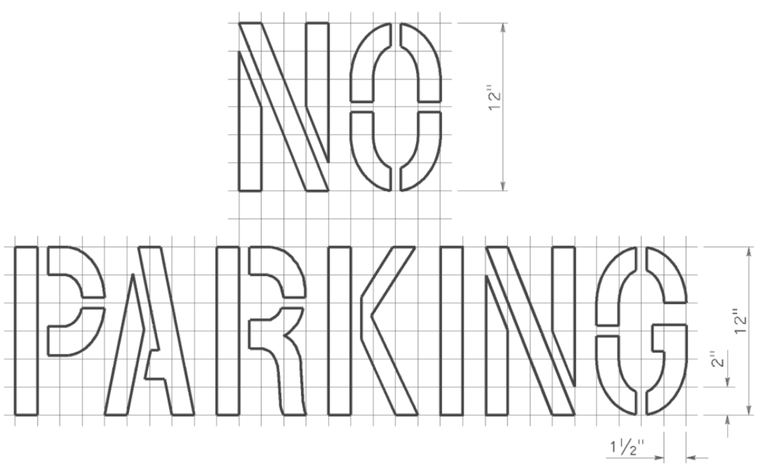

A=2 ft^2
See Notes 6 and 7

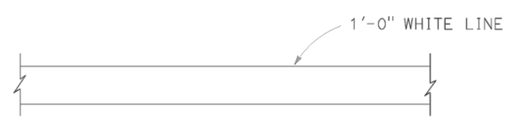

LIMIT LINE (STOP LINE)

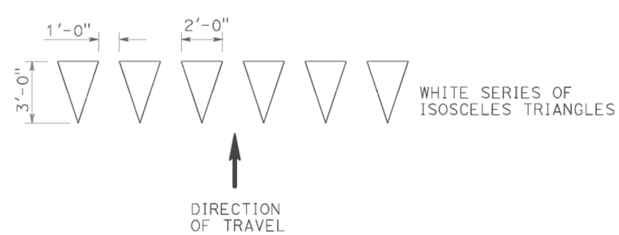

YIELD LINE

NOTES:

1. If a message consists of more than one word, it should read "UP", i.e., the first word should be nearest the driver.
2. The space between words should be at least four times the height of the characters for low speed roads, but not more than ten times the height of the characters. The space may be reduced appropriately where there is limited space because of local conditions.
3. Minor variations in dimensions may be accepted by the Engineer.
4. Portions of a letter, number or symbol may be separated by connecting segments not to exceed 2" in width.
5. The words "NO PARKING" pavement marking is to be used for parking facilities. For typical locations of markings, see Standard Plans A90A and A90B.
6. The words "NO PARKING", shall be painted in white letters no less than 1'-0" high on a contrasting background and located so that it is visible to traffic enforcement officials.

STATE OF CALIFORNIA
DEPARTMENT OF TRANSPORTATION

PAVEMENT MARKINGS WORDS, LIMIT AND YIELD LINES

NO SCALE

RSP A24E DATED JULY 20, 2012 SUPERSEDES STANDARD PLAN A24E
DATED MAY 20, 2011 - PAGE 17 OF THE STANDARD PLANS BOOK DATED 2010.

REVISED STANDARD PLAN RSP A24E

2010 REVISED STANDARD PLAN RSP A24E

DATE PLOTTED => 30-MAR-2015
TIME PLOTTED => 09:29

Dist	COUNTY	ROUTE	POST MILES TOTAL PROJECT	SHEET No.	TOTAL SHEETS
02	Sha	299	47.5/48.1	43	64

Randell D. Hiatt
REGISTERED CIVIL ENGINEER

July 19, 2013
PLANS APPROVAL DATE

REGISTERED PROFESSIONAL ENGINEER
Randell D. Hiatt
No. C50200
Exp. 6-30-15
CIVIL
STATE OF CALIFORNIA

THE STATE OF CALIFORNIA OR ITS OFFICERS OR AGENTS SHALL NOT BE RESPONSIBLE FOR THE ACCURACY OR COMPLETENESS OF SCANNED COPIES OF THIS PLAN SHEET.

TO ACCOMPANY PLANS DATED 03-26-15

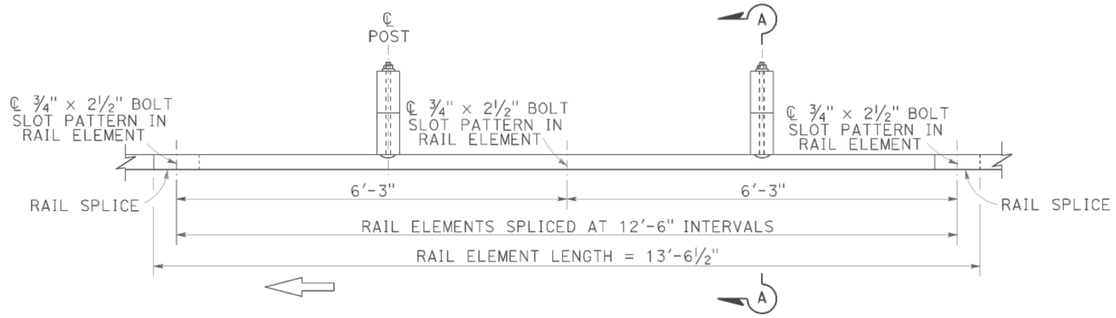

PLAN

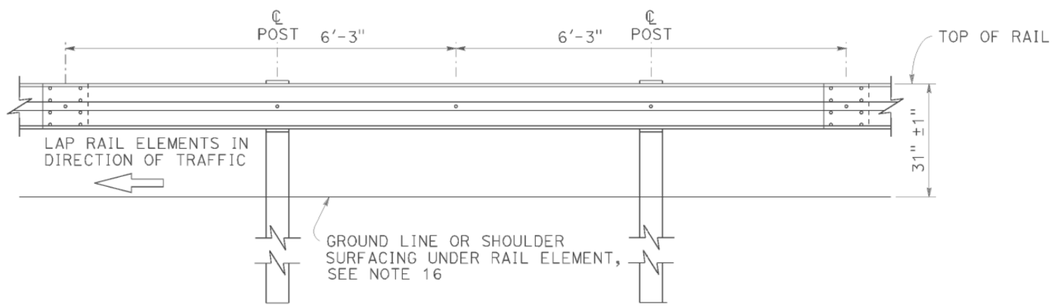

ELEVATION

MIDWEST GUARDRAIL SYSTEM WITH WOOD POST AND BLOCKS

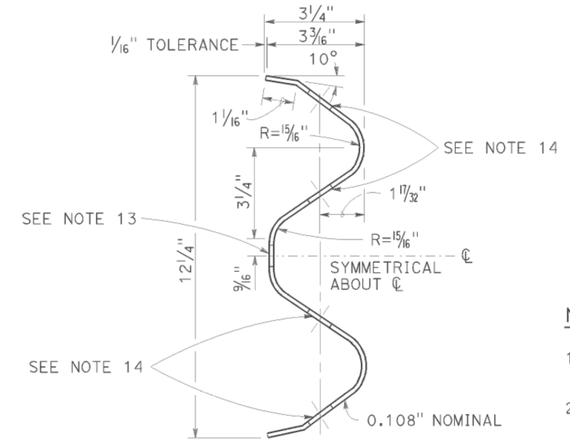

SECTION THRU RAIL ELEMENT

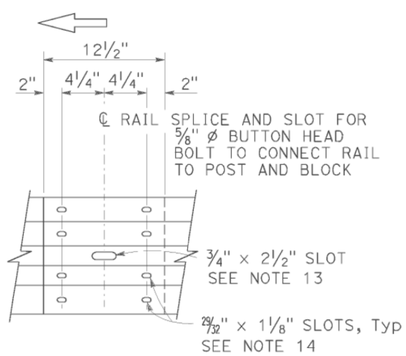

ELEVATION

RAIL ELEMENT SPLICE DETAIL

a) Connect the over lapped end of the rail elements with ⅝" ø × 1⅜" button head oval shoulder splice bolts inserted into the 29/32" × 1⅛" slots and bolted together with ⅝" ø recessed hex nuts. Recess of hex nut points toward rail element. A total of 8 bolts and nuts are to be used at each rail splice connection.

b) The ends of the rail elements are to be overlapped in the direction of traffic (see details).

c) Where end cap is to be attached to the end of a rail element, a total of 4 of the above described splice bolts and nuts are to be used.

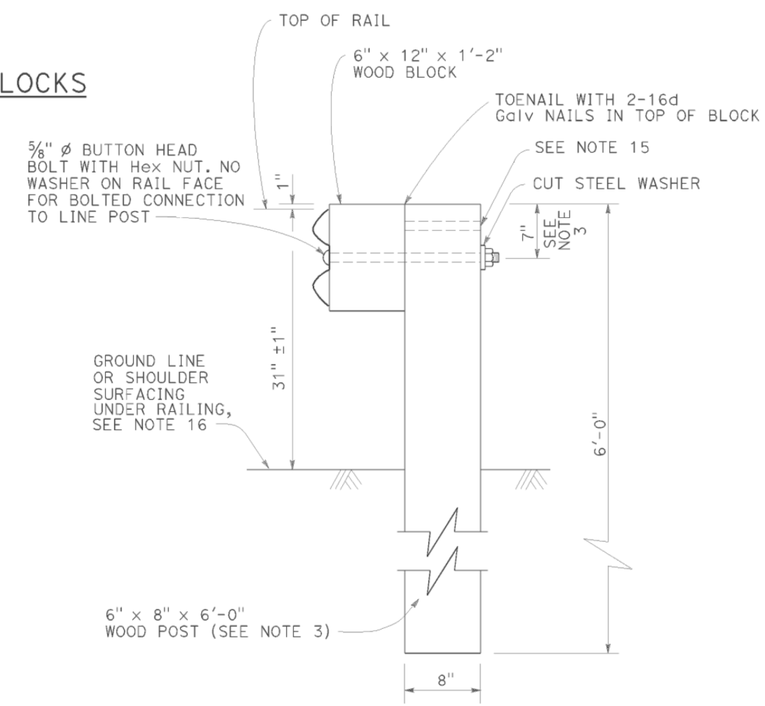

SECTION A-A

TYPICAL WOOD LINE POST INSTALLATION

See Note 4

NOTES:

1. For details of steel post installations, see Revised Standard Plan RSP A77L2.
2. For details of standard hardware used to construct MGS, see Revised Standard Plan RSP A77M1.
3. For details of wood posts and wood blocks used to construct MGS, see Revised Standard Plan RSP A77N1.
4. For additional installation details, see Revised Standard Plan RSP A77N3.
5. MGS post spacing to be 6'-3" center to center, except as otherwise noted.
6. For MGS typical layouts, see the A77P, A77Q and A77R Series of Standard Plans.
7. If railing is connected to terminal system end treatment, use 31" height terminal system end treatment.
8. For MGS end anchor details, see Revised Standard Plans RSP A77S1 and RSP A77T2.
9. For details of MGS transition to bridge railing, see Revised Standard Plan RSP A77U4.
10. For additional details of MSG connection to bridge railing, see Revised Standard Plans RSP A77U1, RSP A77U2 and RSP A77V1.
11. For MGS connection details to abutments and walls, see Revised Standard Plan RSP A77U3.
12. For typical MGS delineation and dike positioning details, see Revised Standard Plan RSP A77N4.
13. Slotted hole for bolted connection of rail element to block and post. See "Section Thru Rail Element".
14. Slotted holes for splice bolts to overlap ends of rail element. See "Section Thru Rail Element".
15. Additional hole in uppermost portion of line post is for potential future adjustments of railing height. See Revised Standard Plan RSP A77N1.
16. Install posts in soil.

STATE OF CALIFORNIA
DEPARTMENT OF TRANSPORTATION

MIDWEST GUARDRAIL SYSTEM STANDARD RAILING SECTION (WOOD POST WITH WOOD BLOCK)

NO SCALE

RSP A77L1 DATED JULY 19, 2013 SUPPLEMENTS STANDARD PLANS BOOK DATED 2010.

REVISED STANDARD PLAN RSP A77L1

2010 REVISED STANDARD PLAN RSP A77L1

DATE PLOTTED => 30-MAR-2015
TIME PLOTTED => 09:29

Dist	COUNTY	ROUTE	POST MILES TOTAL PROJECT	SHEET No.	TOTAL SHEETS
02	Sha	299	47.5/48.1	44	64

Randell D. Hiatt
REGISTERED CIVIL ENGINEER

July 19, 2013
PLANS APPROVAL DATE

REGISTERED PROFESSIONAL ENGINEER
Randell D. Hiatt
No. C50200
Exp. 6-30-15
CIVIL
STATE OF CALIFORNIA

THE STATE OF CALIFORNIA OR ITS OFFICERS OR AGENTS SHALL NOT BE RESPONSIBLE FOR THE ACCURACY OR COMPLETENESS OF SCANNED COPIES OF THIS PLAN SHEET.

TO ACCOMPANY PLANS DATED 03-26-15

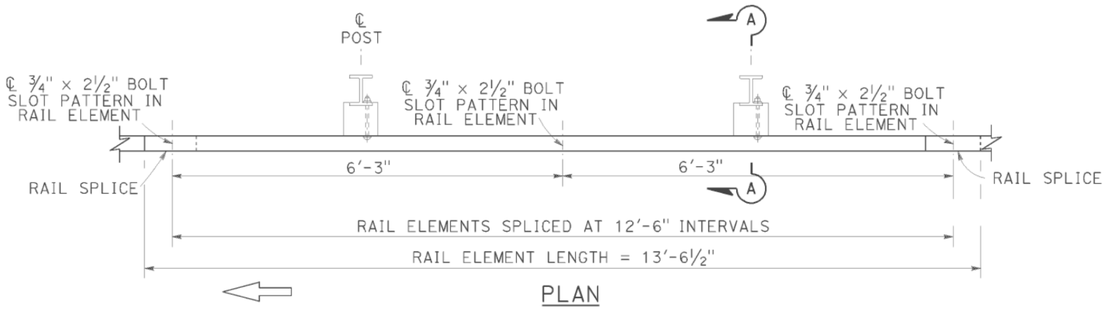

PLAN

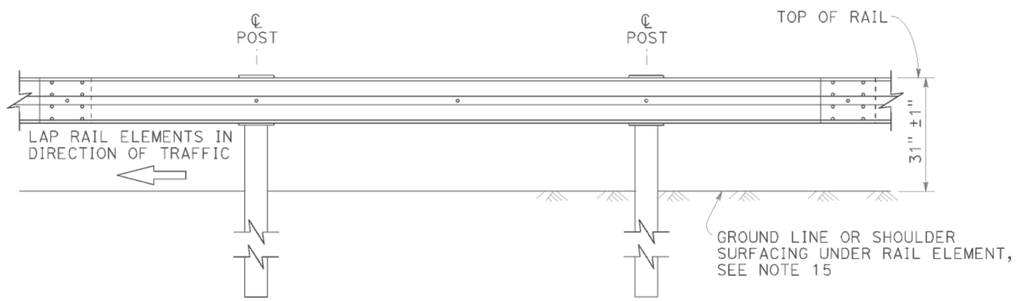

ELEVATION

MIDWEST GUARDRAIL SYSTEM WITH STEEL POSTS AND NOTCHED WOOD OR NOTCHED RECYCLED PLASTIC BLOCKS

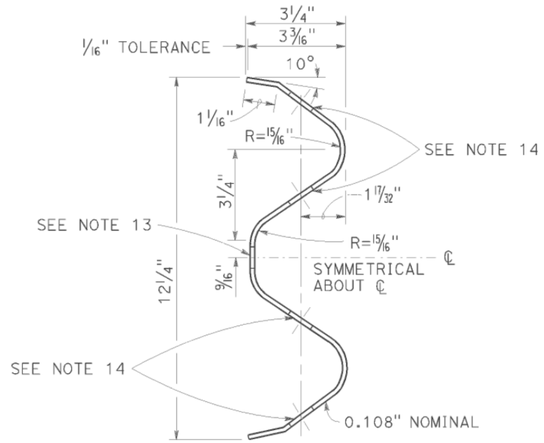

SECTION THRU RAIL ELEMENT

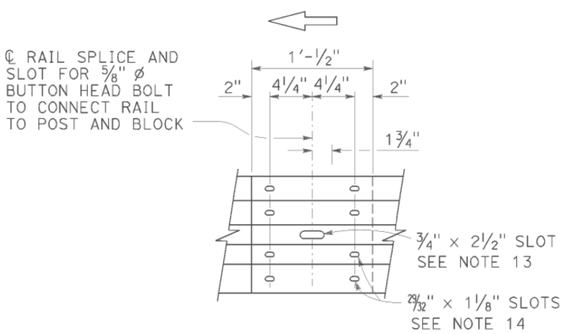

ELEVATION

RAIL ELEMENT SPLICE DETAIL

a) Connect the over lapped end of the rail elements with ⅝" ø × 1⅜" button head oval shoulder splice bolts inserted into the 29/32" × 1⅛" slots and bolted together with ⅝" ø recessed hex nuts. Recess of hex nut points toward rail element. A total of 8 bolts and nuts are to be used at each rail splice connection.

b) The ends of the rail elements are to be overlapped in the direction of traffic (see details).

c) Where end cap is to be attached to the end of a rail element, a total of 4 of the above described splice bolts and nuts are to be used.

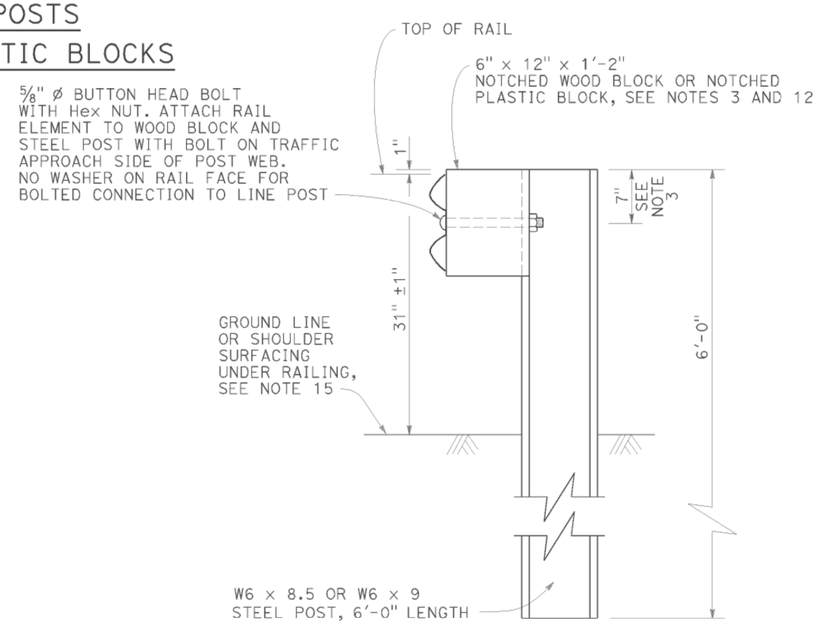

SECTION A-A

TYPICAL STEEL LINE POST INSTALLATION

See Note 4

NOTES:

1. For details of wood post installations, see Revised Standard Plan RSP A77L1.
2. For details of standard hardware used to construct MGS, see Revised Standard Plan RSP A77M1.
3. For details of steel posts and notched wood blocks used to construct MGS, see Revised Standard Plan RSP A77N2.
4. For additional installation details, see Revised Standard Plan RSP A77N3.
5. MGS post spacing to be 6'-3" center to center, except as otherwise noted.
6. For MGS typical layouts, see the A77P, A77Q and A77R Series of Standard Plans.
7. If railing is connected to terminal system end treatment, use 31" height terminal system end treatment.
8. For MGS end anchor details, see Revised Standard Plans RSP A77S1 and RSP A77T2.
9. For details of MGS transition to bridge railing, see Revised Standard Plan RSP A77U4.
10. For additional details of MGS connection to bridge railings, see Revised Standard Plans RSP A77U1, RSP A77U2 and RSP A77V1.
11. For dike positioning and MGS delineation details, see Revised Standard Plan RSP A77N4.
12. Notched face of block faces steel post.
13. Slotted hole for bolted connection of rail element to block and post. See "Section Thru Rail Element".
14. Slotted holes for splice bolts to overlap ends of rail element. See "Section Thru Rail Element".
15. Install posts in soil.

STATE OF CALIFORNIA
DEPARTMENT OF TRANSPORTATION

MIDWEST GUARDRAIL SYSTEM STANDARD RAILING SECTION (STEEL POST WITH NOTCHED WOOD OR NOTCHED RECYCLED PLASTIC BLOCK)

NO SCALE

RSP A77L2 DATED JULY 19, 2013 SUPPLEMENTS THE STANDARD PLANS BOOK DATED 2010.

REVISED STANDARD PLAN RSP A77L2

2010 REVISED STANDARD PLAN RSP A77L2

DATE PLOTTED => 30-MAR-2015
TIME PLOTTED => 08:29

Dist	COUNTY	ROUTE	POST MILES TOTAL PROJECT	SHEET No.	TOTAL SHEETS
02	Sha	299	47.5/48.1	45	64

Randell D. Hiatt
REGISTERED CIVIL ENGINEER

July 19, 2013
PLANS APPROVAL DATE

REGISTERED PROFESSIONAL ENGINEER
Randell D. Hiatt
No. C50200
Exp. 6-30-15
CIVIL
STATE OF CALIFORNIA

THE STATE OF CALIFORNIA OR ITS OFFICERS OR AGENTS SHALL NOT BE RESPONSIBLE FOR THE ACCURACY OR COMPLETENESS OF SCANNED COPIES OF THIS PLAN SHEET.

TO ACCOMPANY PLANS DATED 03-26-15

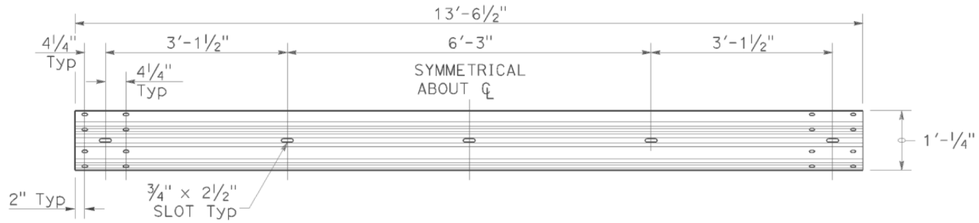

TYPICAL RAIL ELEMENT

NOTE:

1. Slotted holes for splice bolts to overlap ends of rail element.

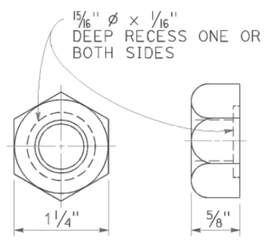

⅝" ø RECESS NUT

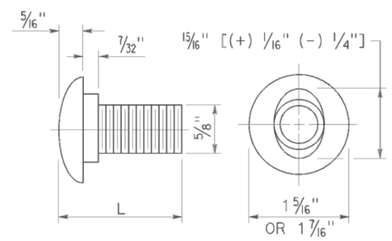

⅝" ø BUTTON HEAD BOLT

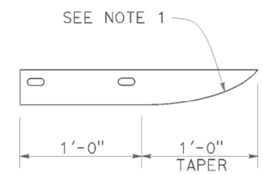

PLAN

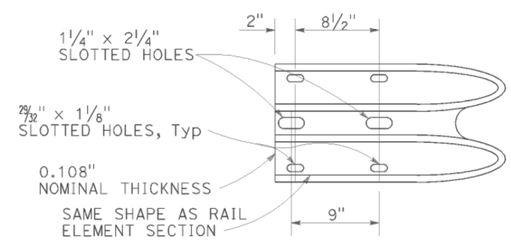

ELEVATION

END CAP
(TYPE A)

BUTTON HEAD BOLT

L	THREAD LENGTH
1⅜"	FULL THREAD LENGTH
2"	FULL THREAD LENGTH
10"	4" Min THREAD LENGTH
18"	4" Min THREAD LENGTH
20"	4" Min THREAD LENGTH
22"	4" Min THREAD LENGTH
26"	4" Min THREAD LENGTH
36"	4" Min THREAD LENGTH
** 2¾"	2" Min THREAD LENGTH
** 19"	4" Min THREAD LENGTH

** For nested rail applications.

STATE OF CALIFORNIA
DEPARTMENT OF TRANSPORTATION

MIDWEST GUARDRAIL SYSTEM STANDARD HARDWARE

NO SCALE

RSP A77M1 DATED JULY 19, 2013 SUPPLEMENTS THE STANDARD PLANS BOOK DATED 2010.

REVISED STANDARD PLAN RSP A77M1

2010 REVISED STANDARD PLAN RSP A77M1

DATE PLOTTED => 30-MAR-2015
TIME PLOTTED => 09:29

Dist	COUNTY	ROUTE	POST MILES TOTAL PROJECT	SHEET No.	TOTAL SHEETS
02	Sha	299	47.5/48.1	46	64

Randell D. Hiatt
REGISTERED CIVIL ENGINEER

November 15, 2013
PLANS APPROVAL DATE

REGISTERED PROFESSIONAL ENGINEER
Randell D. Hiatt
No. C50200
Exp. 6-30-15
CIVIL
STATE OF CALIFORNIA

THE STATE OF CALIFORNIA OR ITS OFFICERS OR AGENTS SHALL NOT BE RESPONSIBLE FOR THE ACCURACY OR COMPLETENESS OF SCANNED COPIES OF THIS PLAN SHEET.

TO ACCOMPANY PLANS DATED 03-26-15

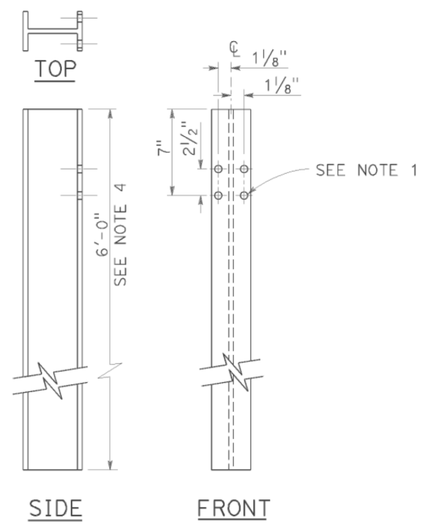

W6 x 9 OR W6 x 8.5
STEEL POST
See Note 4

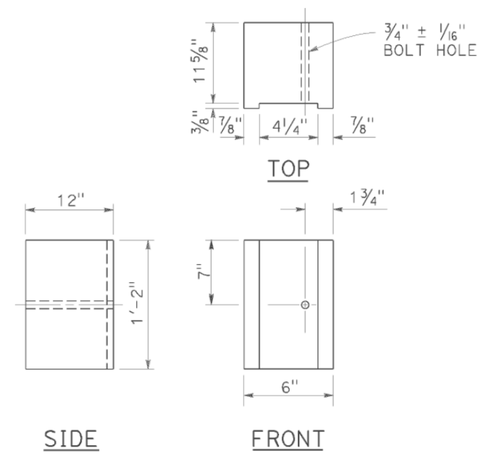

6" x 12"
NOTCHED WOOD BLOCK
See Notes 2 and 3

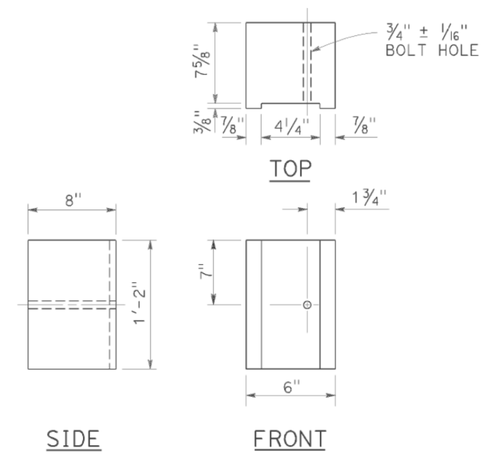

6" x 8"
NOTCHED WOOD BLOCK
Only for use with metal beam guard railing. See Note 5

NOTES:

1. All holes in steel post shall be 13/16" Dia maximum.
2. Dimensions shown for wood block are nominal.
3. Notched face of block faces steel post.
4. 6'-0" length posts to be used for typical roadway installation. See Revised Standard Plan RSP A77N3.
5. See Revised Standard Plan RSP A77L3 for use of 6" x 8" and 8" x 8" notched wood blocks.
6. This post and 8" x 12" block combination to be used for line post sections of MGS on narrow roadways and where strengthened line post sections of MGS are warranted to shield fixed objects.

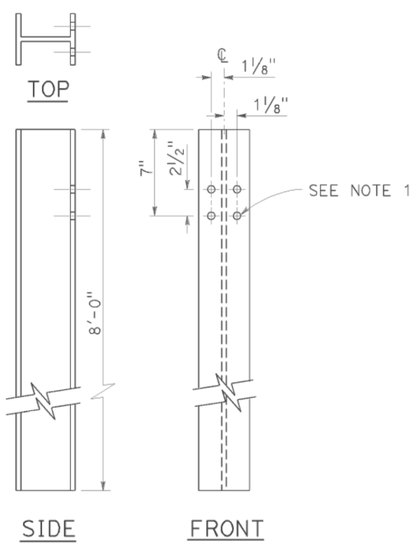

W6 x 15
STEEL POST
See Note 6

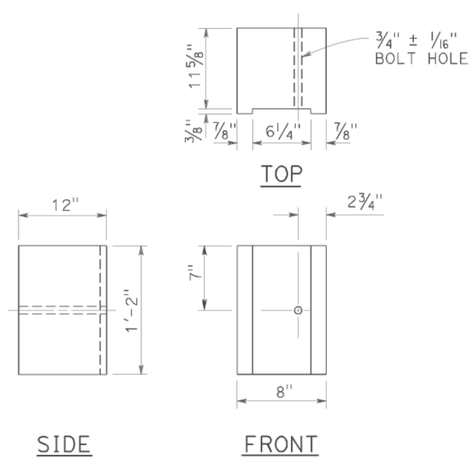

8" x 12"
NOTCHED WOOD BLOCK
See Notes 2 and 3

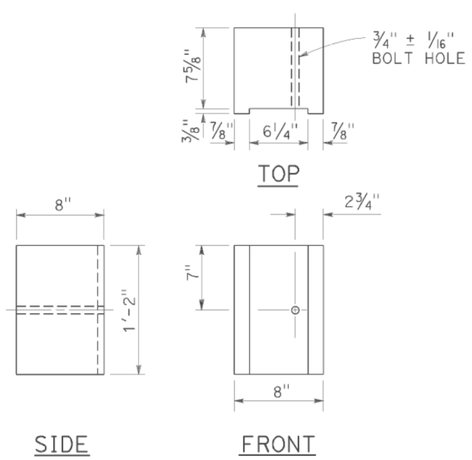

8" x 8"
NOTCHED WOOD BLOCK
Only for use with metal beam guard railing. See Note 5

STATE OF CALIFORNIA
DEPARTMENT OF TRANSPORTATION

MIDWEST GUARDRAIL SYSTEM STEEL POST AND NOTCHED WOOD BLOCK DETAILS

NO SCALE

RSP A77N2 DATED NOVEMBER 15, 2013 SUPERSEDES RSP A77N2
DATED JULY 19, 2013 THAT SUPPLEMENTS THE STANDARD PLANS BOOK DATED 2010.

REVISED STANDARD PLAN RSP A77N2

2010 REVISED STANDARD PLAN RSP A77N2

DATE PLOTTED => 30-MAR-2015
TIME PLOTTED => 09:29

Dist	COUNTY	ROUTE	POST MILES TOTAL PROJECT	SHEET No.	TOTAL SHEETS
02	Sha	299	47.5/48.1	47	64

Randell D. Hiatt
REGISTERED CIVIL ENGINEER

November 15, 2013
PLANS APPROVAL DATE

REGISTERED PROFESSIONAL ENGINEER
Randell D. Hiatt
No. C50200
Exp. 6-30-15
CIVIL
STATE OF CALIFORNIA

THE STATE OF CALIFORNIA OR ITS OFFICERS OR AGENTS SHALL NOT BE RESPONSIBLE FOR THE ACCURACY OR COMPLETENESS OF SCANNED COPIES OF THIS PLAN SHEET.

TO ACCOMPANY PLANS DATED 03-26-15

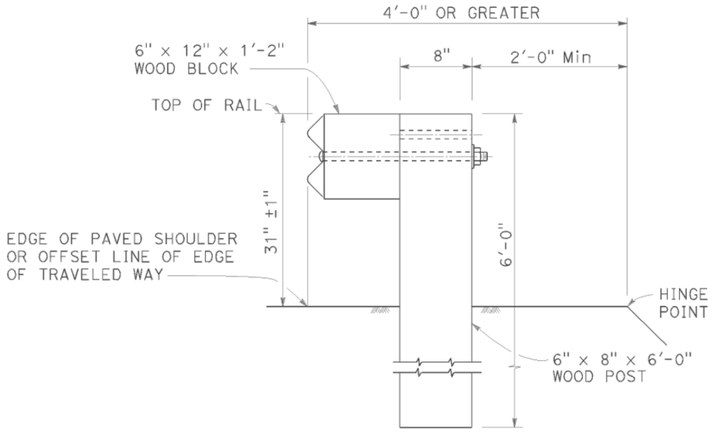

DETAIL A
TYPICAL ROADWAY INSTALLATION
See Note 1

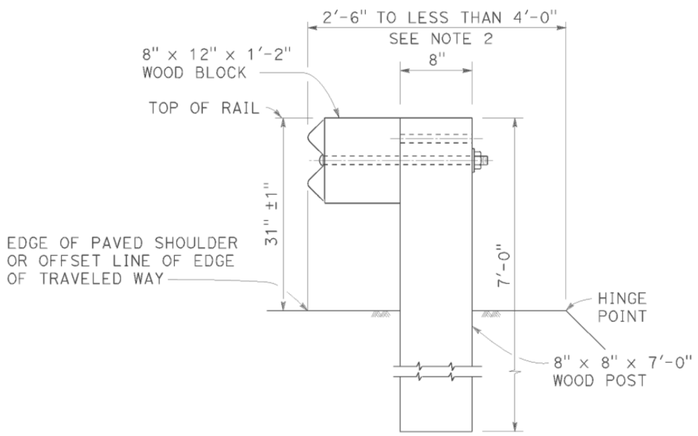

DETAIL B
NARROW ROADWAY INSTALLATION
See Note 1

POST EMBEDMENT

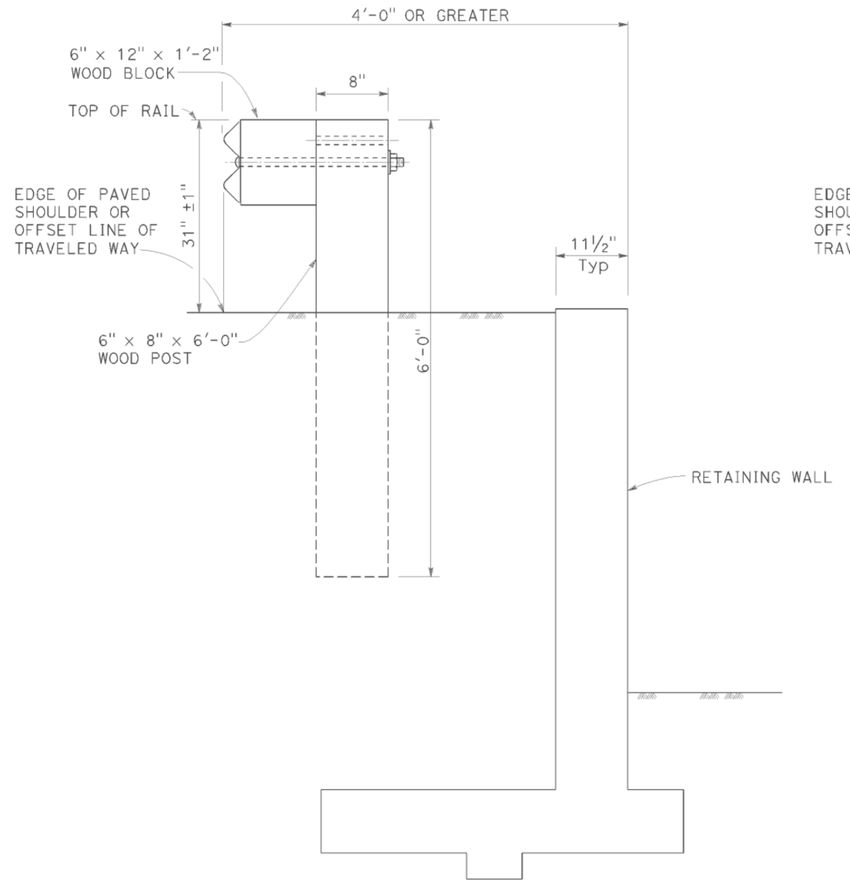

DETAIL C

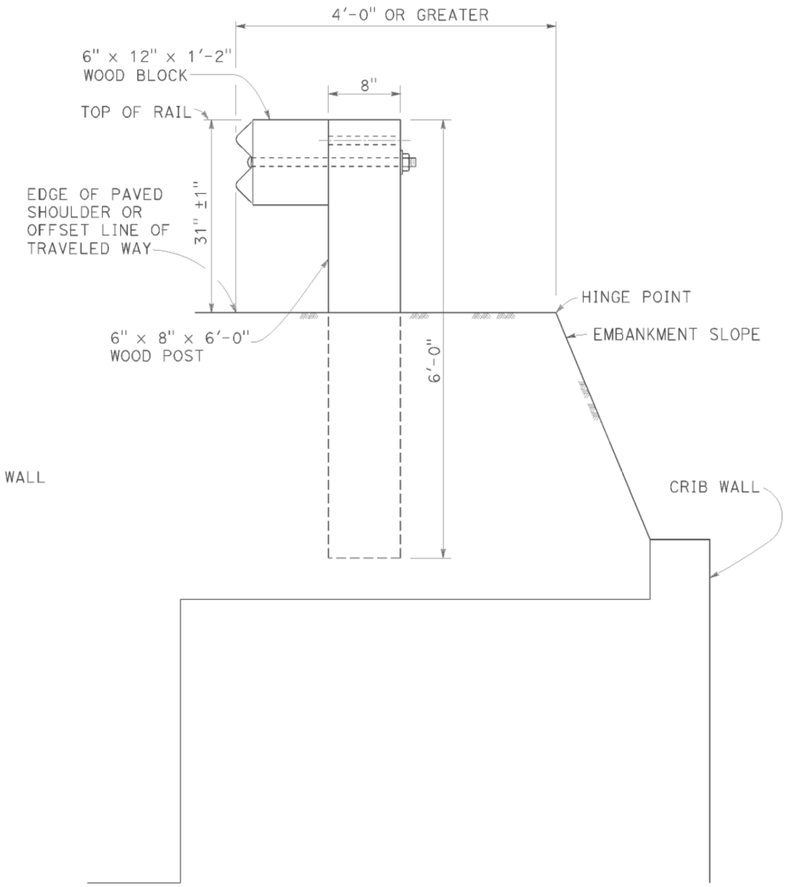

DETAIL D

INSTALLATION AT EARTH RETAINING WALLS

NOTES:

1. These installation details also applicable to steel line post installations. For Detail A, C, and D, where steel line post installations are constructed, W6 x 8.5 or W6 x 9 steel post, 6'-0" in length, with 6" x 12" x 1'-2" notched wood blocks or notched recycled plastic blocks are to be used in place of the size of wood post and wood block shown. For Detail B, where steel line post installations are constructed, W6 x 15 steel post, 8'-0" in length, with 8" x 12" x 1'-2" notched wood blocks or notched recycled plastic blocks are to be used in place of the size of wood post and wood block shown. For additional installation details, see Revised Standard Plan RSP A77L1 and RSP A77L2.
2. Where the distance between the face of the rail and the hinge point is less than 2'-6", see the Project Plans for special details.
3. For dike positioning with MGS installations, see Revised Standard Plan RSP A77N4.

STATE OF CALIFORNIA
DEPARTMENT OF TRANSPORTATION

MIDWEST GUARDRAIL SYSTEM TYPICAL LINE POST EMBEDMENT AND HINGE POINT OFFSET DETAILS

NO SCALE

RSP A77N3 DATED NOVEMBER 15, 2013 SUPERSEDES RSP A77N3 DATED JULY 19, 2013 THAT SUPPLEMENTS THE STANDARD PLANS BOOK DATED 2010.

REVISED STANDARD PLAN RSP A77N3

2010 REVISED STANDARD PLAN RSP A77N3

DATE PLOTTED => 30-MAR-2015
TIME PLOTTED => 09:29

Dist	COUNTY	ROUTE	POST MILES TOTAL PROJECT	SHEET No.	TOTAL SHEETS
02	Sha	299	47.5/48.1	48	64

Randell D. Hiatt
REGISTERED CIVIL ENGINEER

July 19, 2013
PLANS APPROVAL DATE

REGISTERED PROFESSIONAL ENGINEER
Randell D. Hiatt
No. C50200
Exp. 6-30-15
CIVIL
STATE OF CALIFORNIA

THE STATE OF CALIFORNIA OR ITS OFFICERS OR AGENTS SHALL NOT BE RESPONSIBLE FOR THE ACCURACY OR COMPLETENESS OF SCANNED COPIES OF THIS PLAN SHEET.

TO ACCOMPANY PLANS DATED 03-26-15

NOTES:

1. When necessary to place dike more than 7" in front of face of MGS, only Type C dike may be used. For dike details, see Revised Standard Plan RSP A87B.
2. For standard railing post embedment, see Revised Standard Plan RSP A77N3.
3. MGS delineation to be used where shown on the Project Plans.
4. When dike or curb is placed under MGS, the maximum height of the dike or curb shall be 6". Mountable dike should not be used. For dike and curb details, see Revised Standard Plans RSP A87A and RSP A87B.
5. For details of typical distance between the face of rail and hinge point, see Revised Standard Plan RSP A77N3.
6. For steel line posts, use 1/4 - 20 self-tapping screws in 0.22" diameter holes or 1/4" bolts in 9/32" diameter holes.

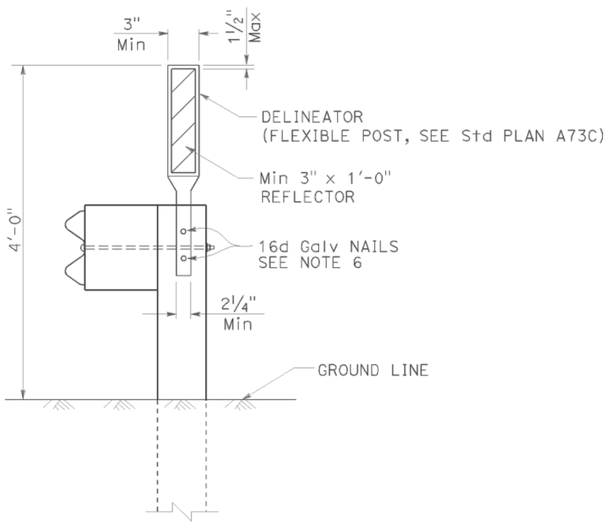

MGS DELINEATION
See Note 3

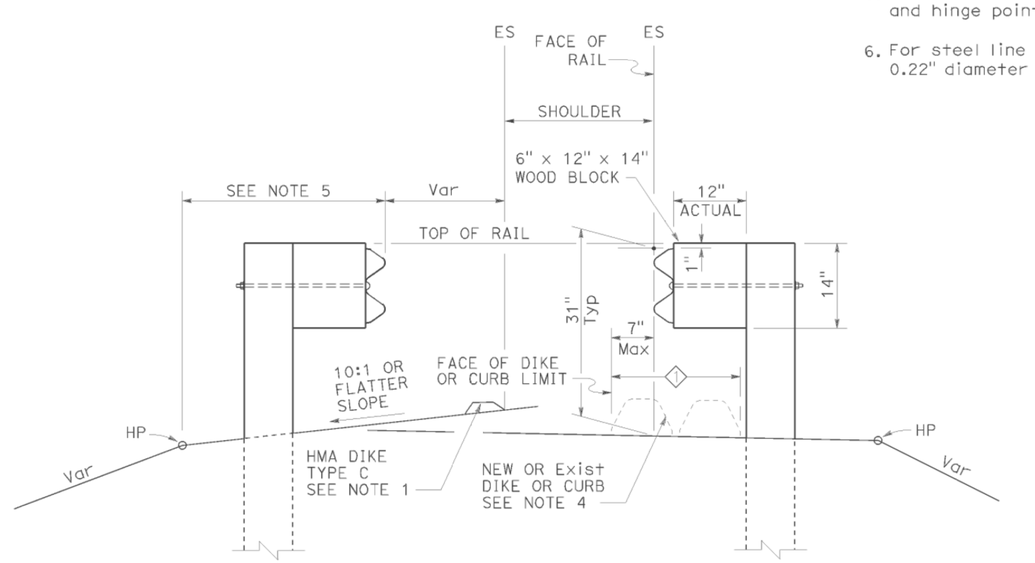

DIKE POSITIONING
See Note 1

1 PERMISSIBLE DIKE OR CURB PLACEMENT AREA

STATE OF CALIFORNIA
DEPARTMENT OF TRANSPORTATION

MIDWEST GUARDRAIL SYSTEM TYPICAL RAILING DELINEATION AND DIKE POSITIONING DETAILS

NO SCALE

RSP A77N4 DATED JULY 19, 2013 SUPPLEMENTS THE STANDARD PLANS BOOK DATED 2010.

REVISED STANDARD PLAN RSP A77N4

2010 REVISED STANDARD PLAN RSP A77N4

DATE PLOTTED => 30-MAR-2015
TIME PLOTTED => 09:30

Dist	COUNTY	ROUTE	POST MILES TOTAL PROJECT	SHEET No.	TOTAL SHEETS
02	Sha	299	47.5/48.1	49	64

Randell D. Hiatt
REGISTERED CIVIL ENGINEER

July 19, 2013
PLANS APPROVAL DATE

REGISTERED PROFESSIONAL ENGINEER
Randell D. Hiatt
No. C50200
Exp. 6-30-15
CIVIL
STATE OF CALIFORNIA

THE STATE OF CALIFORNIA OR ITS OFFICERS OR AGENTS SHALL NOT BE RESPONSIBLE FOR THE ACCURACY OR COMPLETENESS OF SCANNED COPIES OF THIS PLAN SHEET.

TO ACCOMPANY PLANS DATED 03-26-15

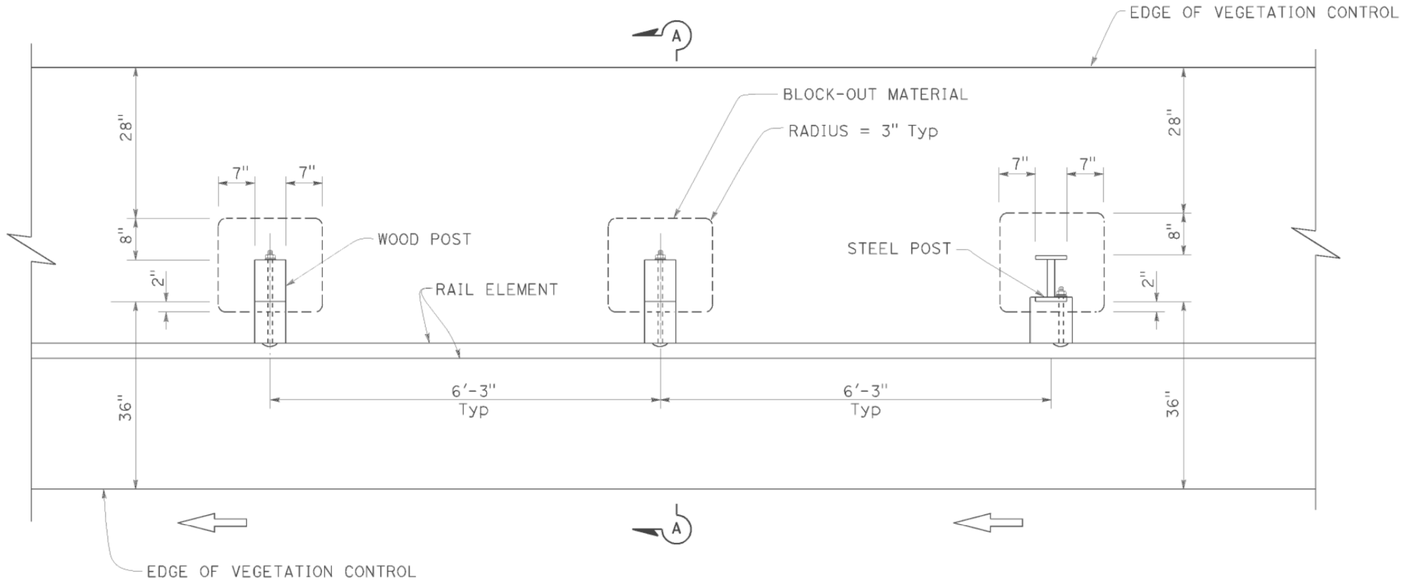

PLAN

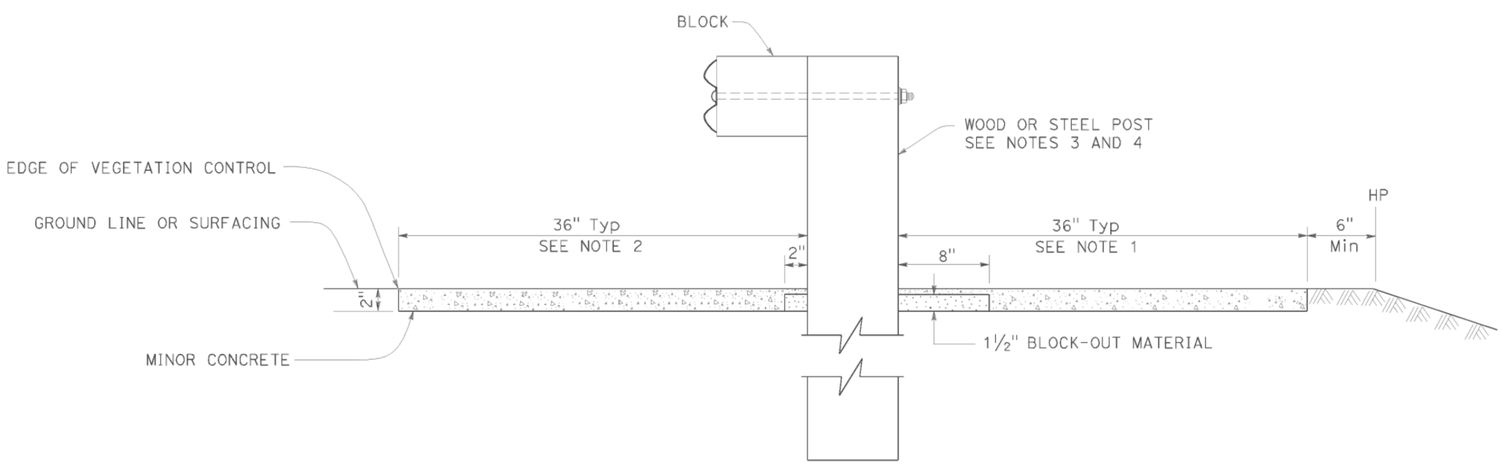

SECTION A-A

NOTES:

1. Where the distance between back of post and hinge point is less than 42", construct vegetation control to 6" from hinge point while maintaining the 8" block-out at back of post. If the 8" block-out at back of post can not be maintained, construct vegetation control flush with the back edge of post.
2. Where dike is constructed under railing, construct vegetation control to back edge of dike. Where paved shoulder is constructed within 36" in front of the post, construct vegetation control to the edge of paved shoulder.
3. For wood post sizes, see Revised Standard Plan RSP A77N1.
4. For steel post sizes, see Revised Standard Plan RSP A77N2.
5. For details not shown, see Revised Standard Plans RSP A77L1 and RSP A77L2.

STATE OF CALIFORNIA
DEPARTMENT OF TRANSPORTATION

MIDWEST GUARDRAIL SYSTEM TYPICAL VEGETATION CONTROL STANDARD RAILING SECTION

NO SCALE

RSP A77N5 DATED JULY 19, 2013 SUPPLEMENTS THE STANDARD PLANS BOOK DATED 2010.

REVISED STANDARD PLAN RSP A77N5

2010 REVISED STANDARD PLAN RSP A77N5

DATE PLOTTED => 30-MAR-2015
TIME PLOTTED => 09:30

Dist	COUNTY	ROUTE	POST MILES TOTAL PROJECT	SHEET No.	TOTAL SHEETS
02	Sha	299	47.5/48.1	50	64

Randell D. Hiatt
REGISTERED CIVIL ENGINEER

July 19, 2013
PLANS APPROVAL DATE

REGISTERED PROFESSIONAL ENGINEER
Randell D. Hiatt
No. C50200
Exp. 6-30-15
CIVIL
STATE OF CALIFORNIA

THE STATE OF CALIFORNIA OR ITS OFFICERS OR AGENTS SHALL NOT BE RESPONSIBLE FOR THE ACCURACY OR COMPLETENESS OF SCANNED COPIES OF THIS PLAN SHEET.

TO ACCOMPANY PLANS DATED 03-26-15

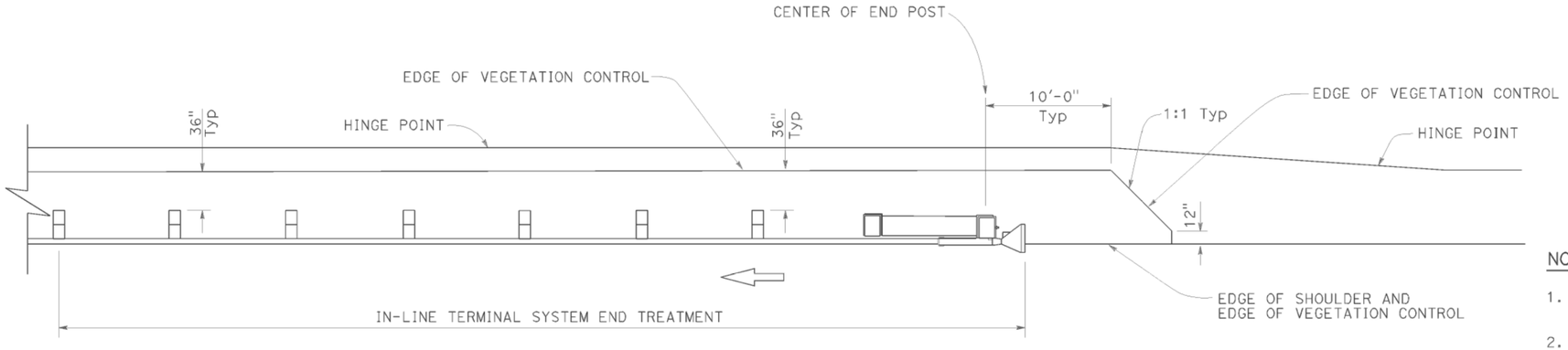

PLAN

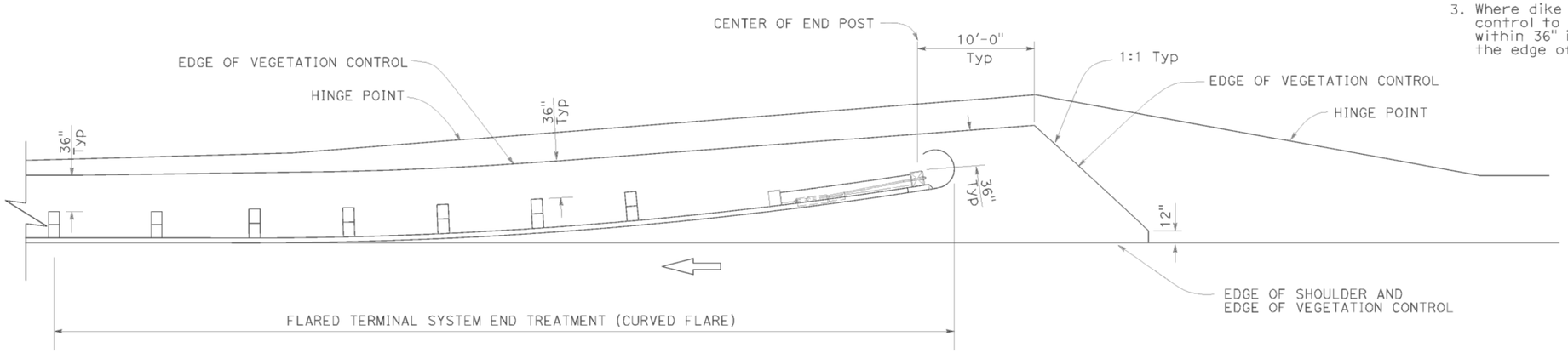

PLAN

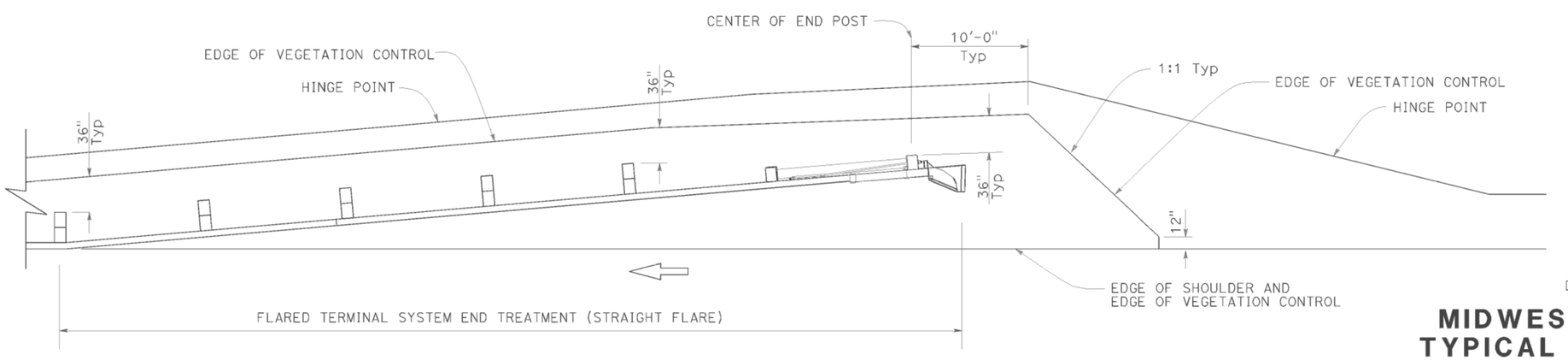

PLAN

NOTES:

1. See Revised Standard Plan RSP A77N5 for additional vegetation control details.
2. Where the distance between back of post and hinge point is less than 42", construct vegetation control to 6" from hinge point while maintaining the 8" block-out at back of post. If the 8" block-out at back of post can not be maintained, construct vegetation control flush with the back edge of post.
3. Where dike is constructed under railing, construct vegetation control to back edge of dike. Where paved shoulder is constructed within 36" in front of the post, construct vegetation control to the edge of paved shoulder.

STATE OF CALIFORNIA
DEPARTMENT OF TRANSPORTATION

MIDWEST GUARDRAIL SYSTEM TYPICAL VEGETATION CONTROL FOR TERMINAL SYSTEM END TREATMENTS

NO SCALE

RSP A77N6 DATED JULY 19, 2013 SUPPLEMENTS THE STANDARD PLANS BOOK DATED 2010.

REVISED STANDARD PLAN RSP A77N6

2010 REVISED STANDARD PLAN RSP A77N6

DATE PLOTTED => 30-MAR-2015
TIME PLOTTED => 09:30

Dist	COUNTY	ROUTE	POST MILES TOTAL PROJECT	SHEET No.	TOTAL SHEETS
02	Sha	299	47.5/48.1	51	64

Randell D. Hiatt
REGISTERED CIVIL ENGINEER

July 19, 2013
PLANS APPROVAL DATE

REGISTERED PROFESSIONAL ENGINEER
Randell D. Hiatt
No. C50200
Exp. 6-30-15
CIVIL
STATE OF CALIFORNIA

THE STATE OF CALIFORNIA OR ITS OFFICERS OR AGENTS SHALL NOT BE RESPONSIBLE FOR THE ACCURACY OR COMPLETENESS OF SCANNED COPIES OF THIS PLAN SHEET.

TO ACCOMPANY PLANS DATED 03-26-15

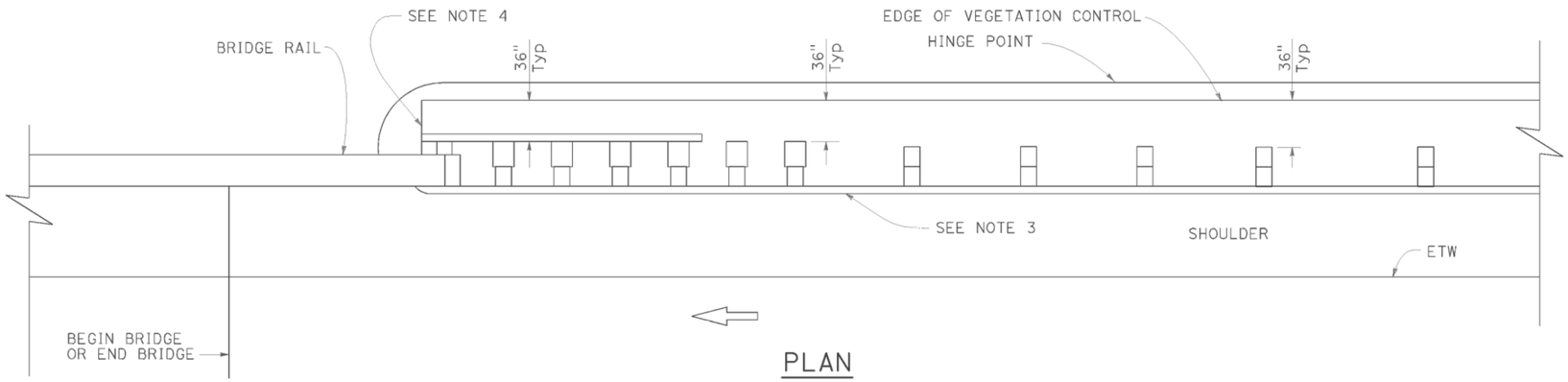

PLAN

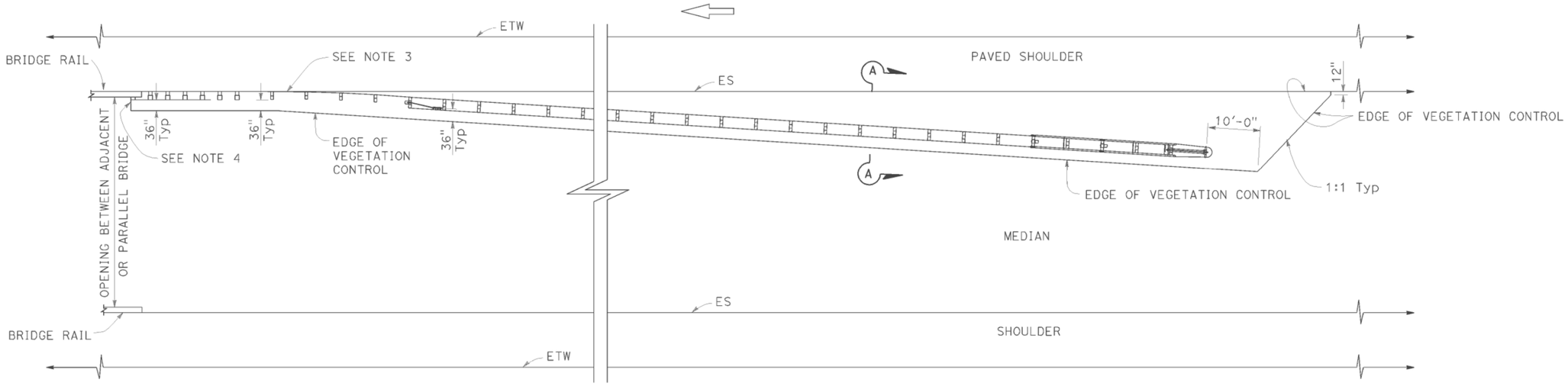

PLAN

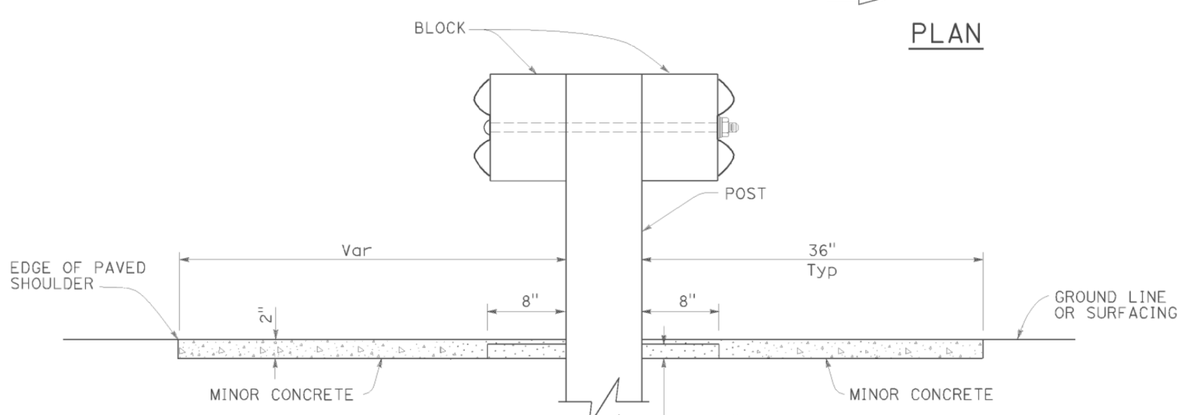

SECTION A-A

NOTES:

1. See Revised Standard Plan RSP A77N5 for additional vegetation control details.
2. Where the distance between back of post and hinge point is less than 42", construct vegetation control to 6" from hinge point while maintaining the 8" block-out at back of post. If the 8" block-out at back of post can not be maintained, construct vegetation control flush with the back edge of post.
3. Where dike is constructed under railing, construct vegetation control to back edge of dike. Where paved shoulder is constructed within 36" in front of the post, construct vegetation control to the edge of paved shoulder.
4. End vegetation control at end of backside rail element.

STATE OF CALIFORNIA
DEPARTMENT OF TRANSPORTATION

MIDWEST GUARDRAIL SYSTEM TYPICAL VEGETATION CONTROL AT STRUCTURE APPROACH

NO SCALE

RSP A77N7 DATED JULY 19, 2013 SUPPLEMENTS THE STANDARD PLANS BOOK DATED 2010.

REVISED STANDARD PLAN RSP A77N7

2010 REVISED STANDARD PLAN RSP A77N7

DATE PLOTTED => 30-MAR-2015
TIME PLOTTED => 09:30

Dist	COUNTY	ROUTE	POST MILES TOTAL PROJECT	SHEET No.	TOTAL SHEETS
02	Sha	299	47.5/48.1	52	64

Randell D. Hiatt
REGISTERED CIVIL ENGINEER

November 15, 2013
PLANS APPROVAL DATE

REGISTERED PROFESSIONAL ENGINEER
Randell D. Hiatt
No. C50200
Exp. 6-30-15
CIVIL
STATE OF CALIFORNIA

THE STATE OF CALIFORNIA OR ITS OFFICERS OR AGENTS SHALL NOT BE RESPONSIBLE FOR THE ACCURACY OR COMPLETENESS OF SCANNED COPIES OF THIS PLAN SHEET.

TO ACCOMPANY PLANS DATED 03-26-15

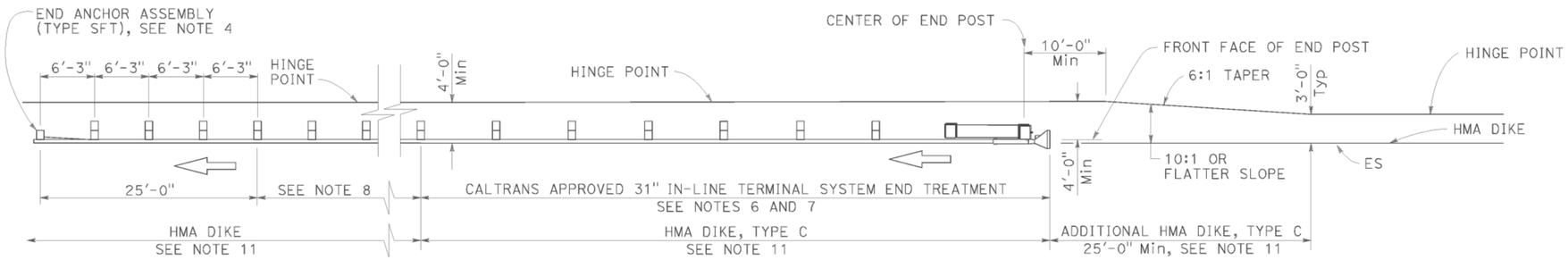

TYPE 11A LAYOUT

(Embankment MGS installation with 31" in-line end treatment at traffic approach end of railing) see Note 5

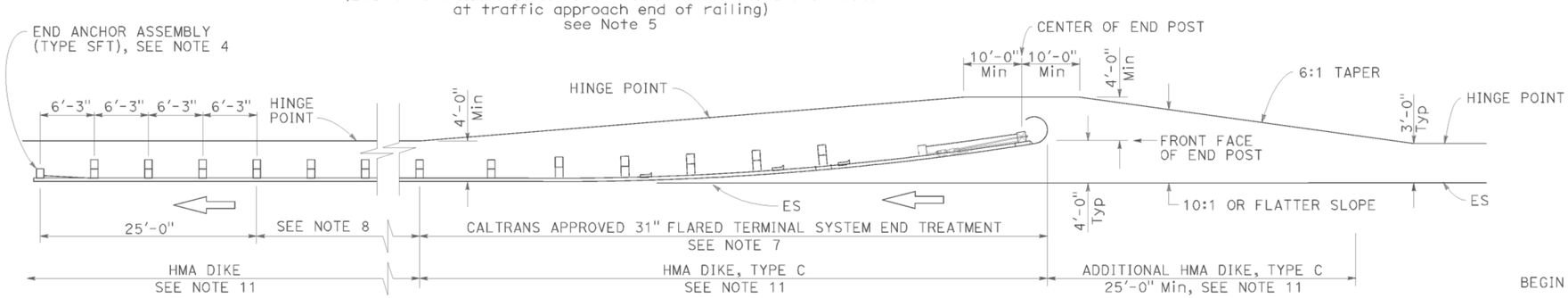

TYPE 11B LAYOUT

(Embankment MGS installation with 31" flared end treatment at traffic approach end of railing) see Note 5

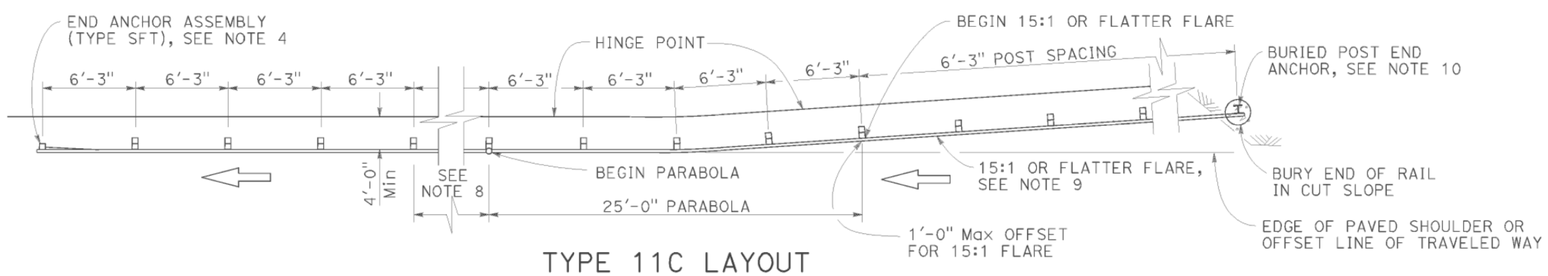

TYPE 11C LAYOUT

(Embankment MGS installation with buried end anchor treatment at traffic approach end of railing) see Notes 5 and 11

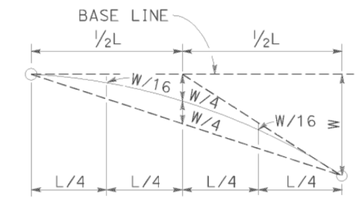

TYPICAL PARABOLIC LAYOUT

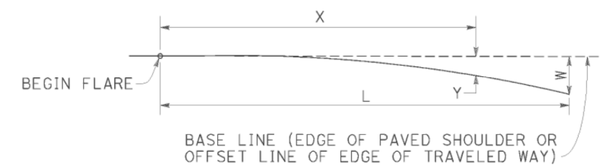

$$Y = \frac{WX^2}{L^2}$$

Y = OFFSET FROM BASE LINE
W = MAXIMUM OFFSET
X = DISTANCE ALONG BASE LINE
L = LENGTH OF FLARE

PARABOLIC FLARE OFFSETS

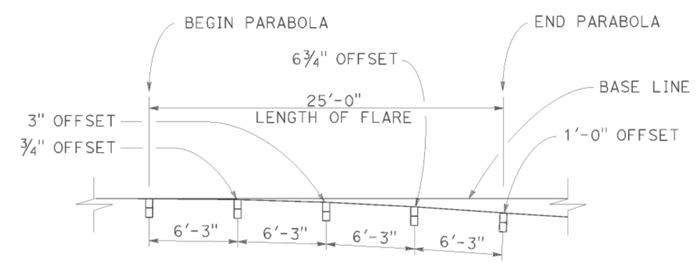

TYPICAL FLARE OFFSETS FOR 1 FOOT Max END OFFSET

NOTES:

1. Line post, blocks and hardware to be used are shown on Revised Standard Plans RSP A77L1, RSP A77L2, RSP A77M1, RSP A77N1 and RSP A77N2.
2. MGS post spacing to be 6'-3" center to center, except as otherwise noted.
3. Except as noted, line posts are 6" x 8" x 6'-0" wood with 6" x 12" x 1'-2" wood blocks. W6 x 8.5 or W6 x 9 steel posts, 6'-0" in length, with 6" x 12" x 1'-2" notched wood blocks or recycled plastic blocks may be used for 6" x 8" x 6'-0" wood post with 6" x 12" x 1'-2" wood blocks where applicable and when specified.
4. For End Anchor Assembly (Type SFT) details, see Revised Standard Plan RSP A77S1.
5. Layout Types 11A, 11B or 11C are typically used where MGS is recommended to shield embankment slopes and a crashworthy end treatment is required for only one direction of traffic.
6. 31" in-line terminal system end treatments are used where site conditions will not accommodate a flared end treatment.
7. The type of 31" terminal system end treatment to be used will be shown on the Project Plans.
8. Dependent on site conditions (embankment height and side slope), construction of additional MGS (length equal to multiples of 12'-6" with 6'-3" post spacing) may be advisable.
9. The 15:1 or flatter flare used with buried end anchors is based on the edge of the paved shoulder or offset line of edge of the traveled way. The length of MGS within the 15:1 or flatter flare is based on site conditions and should be a length equal to multiples of 12'-6".
10. For details of the buried post end anchor used with Type 11C Layout, see Revised Standard Plan RSP A77T2.
11. Where placement of dike is required with MGS installations, see Revised Standard Plan RSP A77N4 for dike positioning details.

STATE OF CALIFORNIA
DEPARTMENT OF TRANSPORTATION

MIDWEST GUARDRAIL SYSTEM TYPICAL LAYOUTS FOR EMBANKMENTS

NO SCALE

RSP A77P1 DATED NOVEMBER 15, 2013 SUPERSEDES RSP A77P1 DATED JULY 19, 2013 THAT SUPPLEMENTS THE STANDARD PLANS BOOK DATED 2010.

REVISED STANDARD PLAN RSP A77P1

2010 REVISED STANDARD PLAN RSP A77P1

DATE PLOTTED => 30-MAR-2015
TIME PLOTTED => 09:30

Dist	COUNTY	ROUTE	POST MILES TOTAL PROJECT	SHEET No.	TOTAL SHEETS
02	Sha	299	47.5/48.1	53	64

Randell D. Hiatt
REGISTERED CIVIL ENGINEER

July 19, 2013
PLANS APPROVAL DATE

REGISTERED PROFESSIONAL ENGINEER
Randell D. Hiatt
No. C50200
Exp. 6-30-15
CIVIL
STATE OF CALIFORNIA

THE STATE OF CALIFORNIA OR ITS OFFICERS OR AGENTS SHALL NOT BE RESPONSIBLE FOR THE ACCURACY OR COMPLETENESS OF SCANNED COPIES OF THIS PLAN SHEET.

TO ACCOMPANY PLANS DATED 03-26-15

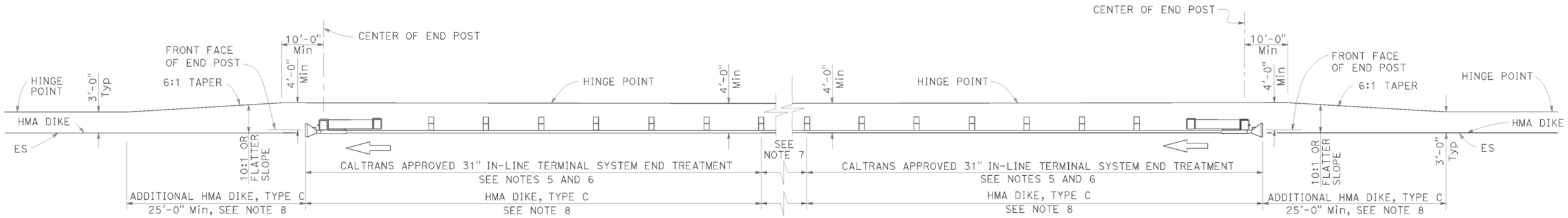

TYPE 11D LAYOUT

(Embankment MGS installation with
31" in-line end treatment at each end of railing)
See Note 4

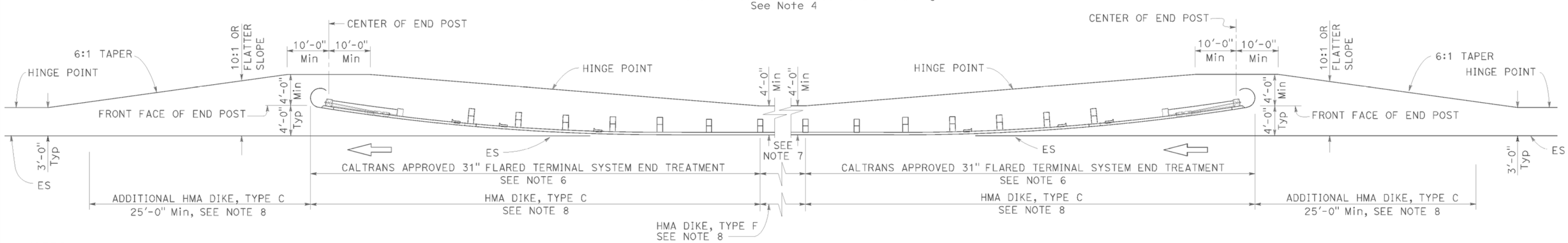

TYPE 11E LAYOUT

(Embankment MGS installation with
31" flared end treatment at each end of railing)
See Note 4

NOTES:

1. Line post, blocks and hardware to be used are shown on Revised Standard Plans RSP A77L1, RSP A77L2, RSP A77M1, RSP A77N1 and RSP A77N2.
2. MGS post spacing to be 6'-3" center to center, except as otherwise noted.
3. Except as noted, line posts are 6" x 8" x 6'-0" wood with 6" x 12" x 1'-2" wood blocks. W6 x 8.5 or W6 x 9 steel posts, 6'-0" in length, with 6" x 12" x 1'-2" notched wood blocks or plastic blocks may be used for 6" x 8" x 6'-0" wood post with 6" x 12" x 1'-2" wood blocks where applicable and when specified.
4. Layout Types 11D through 11L, shown on the A77P Series of Standard Plans, are typically used where MGS is recommended to shield embankment slopes and a crashworthy 31" end treatment is required for both directions of traffic.
5. 31" in-line terminal system end treatments are used where site conditions will not accommodate a flared end treatment.
6. The type of 31" terminal system end treatment to be used will be shown on the Project Plans.
7. Dependent on site conditions (embankment height and side slope), construction of additional MGS (length equal to multiples of 12'-6" with 6'-3" post spacing) may be advisable.
8. Where placement of dike is required with MGS installations, see Revised Standard Plan RSP A77N4 for dike positioning details.

STATE OF CALIFORNIA
DEPARTMENT OF TRANSPORTATION

MIDWEST GUARDRAIL SYSTEM TYPICAL LAYOUTS FOR EMBANKMENTS

NO SCALE

RSP A77P2 DATED JULY 19, 2013 SUPPLEMENTS THE STANDARD PLANS BOOK DATED 2010.

REVISED STANDARD PLAN RSP A77P2

2010 REVISED STANDARD PLAN RSP A77P2

DATE PLOTTED => 30-MAR-2015
TIME PLOTTED => 09:30

Dist	COUNTY	ROUTE	POST MILES TOTAL PROJECT	SHEET No.	TOTAL SHEETS
02	Sha	299	47.5/48.1	54	64

Randell D. Hiatt
REGISTERED CIVIL ENGINEER

July 19, 2013
PLANS APPROVAL DATE

REGISTERED PROFESSIONAL ENGINEER
Randell D. Hiatt
No. C50200
Exp. 6-30-15
CIVIL
STATE OF CALIFORNIA

THE STATE OF CALIFORNIA OR ITS OFFICERS OR AGENTS SHALL NOT BE RESPONSIBLE FOR THE ACCURACY OR COMPLETENESS OF SCANNED COPIES OF THIS PLAN SHEET.

TO ACCOMPANY PLANS DATED 03-26-15

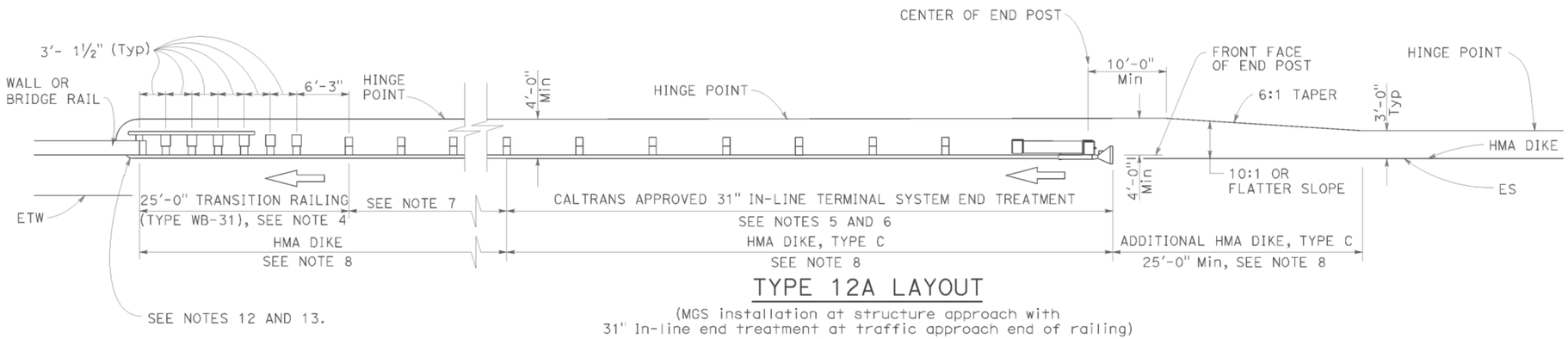

TYPE 12A LAYOUT

(MGS installation at structure approach with
31" In-line end treatment at traffic approach end of railing)
See Notes 9

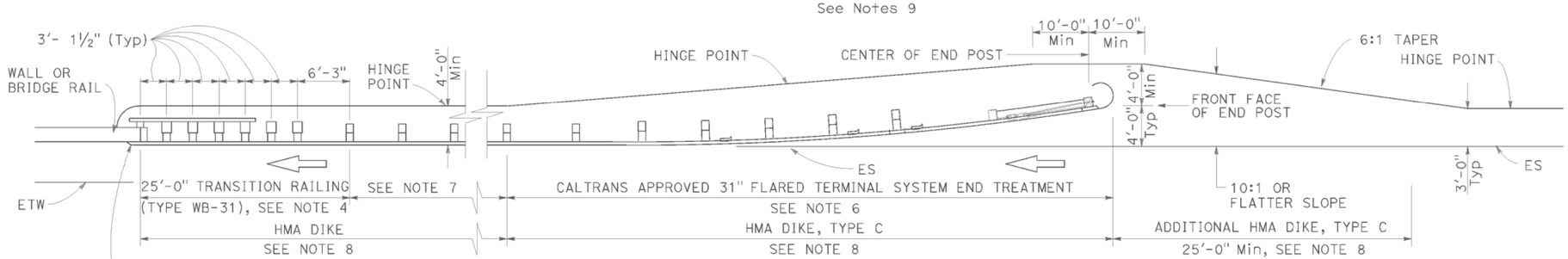

TYPE 12B LAYOUT

(MGS installation at structure approach with
31" Flared end treatment at traffic approach end of railing)
See Notes 9

NOTES:

1. Line post, blocks and hardware to be used are shown on Revised Standard Plans RSP A77L1, RSP A77L2, RSP A77M1, RSP A77N1 and RSP A77N2.

2. MGS post spacing to be 6'-3" center to center, except as otherwise noted.

3. Except as noted, line posts are 6" x 8" x 6'-0" wood with 6" x 12" x 1'-2" wood blocks. W6 x 8.5 or W6 x 9 steel posts, 6'-0" in length, with 6" x 12" x 1'-2" notched wood blocks or plastic blocks may be used for 6" x 8" x 6'-0" wood posts with 6" x 12" x 1'-2" wood blocks where applicable and when specified.

4. For Transition Railing (Type WB-31) details for Types 12A and 12B Layouts, see Revised Standard Plan RSP A77U4.

5. 31" in-line terminal system end treatments are used where site conditions will not accommodate a 31" flared end treatment.

6. The type 31" of terminal system end treatment to be used will be shown on the Project Plans.

7. Dependent on site conditions (embankment height, side slopes, or other fixed objects), it may be advisable to construct additional guard railing (a length equal to multiples of 12'-6" with 6'-3" post spacing) between the transition railing and end treatment. A 12.5 degree angle of departure can be drawn on the Project Plans from the edge of traveled way through the outer most point of the fixed object to determine the additional length of railing needed.

8. Where placement of dike is required with guard railing installations, see Revised Standard Plan RSP A77N4 for dike positioning details.

9. Type 12A or Type 12B Layouts are typically used:

   a. To the right of approaching traffic, at the end of a structure, on two-lane conventional highway where the roadbed width across the structure is less than 40 feet.

   b. To the left of approaching traffic, at the end of a structure, on two-lane conventional highway where the roadbed width across the structure is less than 40 feet.

   c. To the right of approaching traffic at the end of each structure on multilane freeways or expressways with separate adjacent or parallel bridges.

   d. To the right of approaching traffic at the end of the structure on multilane freeways or expressways with decked median on the bridge.

10. See Revised Standard Plan RSP A77Q3 for typical layout used left of approaching traffic at the ends of each structure on multilane freeways or expressways with separate adjacent or parallel bridges.

11. For additional details of typical connections to bridge rail, see Connection Detail AA on Revised Standard Plans RSP A77U1 and RSP A77U2 and Connection Detail FF on Revised Standard Plans RSP A77V1 and RSP A77V2.

12. For additional details of a typical connection to walls or abutments, see Revised Standard Plan RSP A77U3.

STATE OF CALIFORNIA
DEPARTMENT OF TRANSPORTATION

MIDWEST GUARDRAIL SYSTEM TYPICAL LAYOUTS FOR STRUCTURE APPROACH

NO SCALE

RSP A77Q1 DATED JULY 19, 2013 SUPPLEMENTS THE STANDARD PLANS BOOK DATED 2010.

REVISED STANDARD PLAN RSP A77Q1

2010 REVISED STANDARD PLAN RSP A77Q1

DATE PLOTTED => 30-MAR-2015
TIME PLOTTED => 09:30

Dist	COUNTY	ROUTE	POST MILES TOTAL PROJECT	SHEET No.	TOTAL SHEETS
02	Sha	299	47.5/48.1	55	64

Randell D. Hiatt
REGISTERED CIVIL ENGINEER

July 19, 2013
PLANS APPROVAL DATE

REGISTERED PROFESSIONAL ENGINEER
Randell D. Hiatt
No. C50200
Exp. 6-30-15
CIVIL
STATE OF CALIFORNIA

THE STATE OF CALIFORNIA OR ITS OFFICERS OR AGENTS SHALL NOT BE RESPONSIBLE FOR THE ACCURACY OR COMPLETENESS OF SCANNED COPIES OF THIS PLAN SHEET.

TO ACCOMPANY PLANS DATED 03-26-15

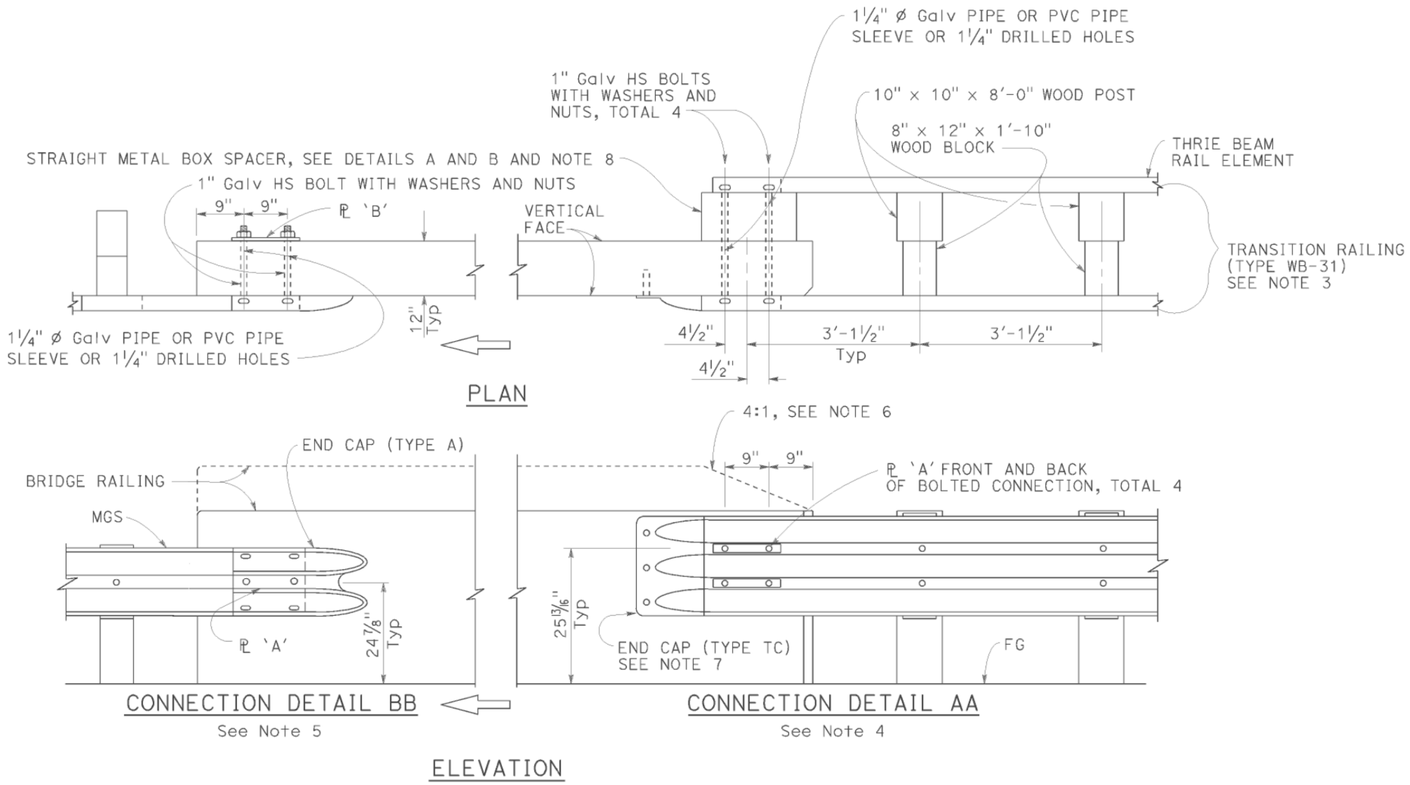

MIDWEST GUARDRAIL SYSTEM CONNECTION TO BRIDGE RAILING WITHOUT SIDEWALK

NOTES:

1. See Revised Standard Plan RSP A77U2 for additional connection details to bridges without sidewalks.
2. Additional details of posts, blocks and hardware are shown on Revised Standard Plans RSP A77M1, RSP A77N1 and RSP A77N2.
3. For additional details of Transition Railing (Type WB-31), see Revised Standard Plan RSP A77U4. Transition Railing (Type WB-31) transitions the 12 gauge MGS railing section to a heavier gage nested thrie beam railing section which is connected to the concrete bridge railing.
4. For typical use of Connection Detail AA, see Layout Types 12A and 12B on Revised Standard Plan RSP A77Q1, Layout Types 12C and 12D on Revised Standard Plan RSP A77Q2, and Layout Type 12E on Revised Standard Plan RSP A77Q3.
5. For typical use of Connection Detail BB, see Layout Type 12D (structure departure railing connection) on Revised Standard Plan RSP A77Q2 and Layout Type 12DD on Revised Standard Plan RSP A77Q5.
6. Where the height of the bridge railing exceeds the height of the thrie beam railing by more than 1" at Connection Detail AA, taper the top of the end of the bridge railing at 4:1 to match the top elevation of the thrie beam rail.
7. For details of End Cap (Type TC), see Revised Standard Plan RSP A77U4.
8. See Revised Standard Plan RSP A77U4 for additional details regarding depth dimension for straight metal box spacer.

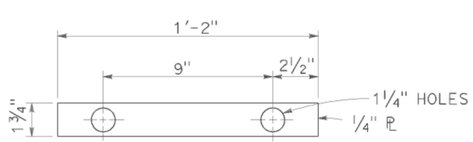

PLATE 'A'

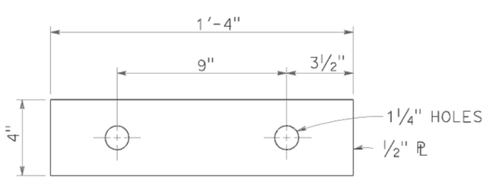

PLATE 'B'
(For backside of connection BB)

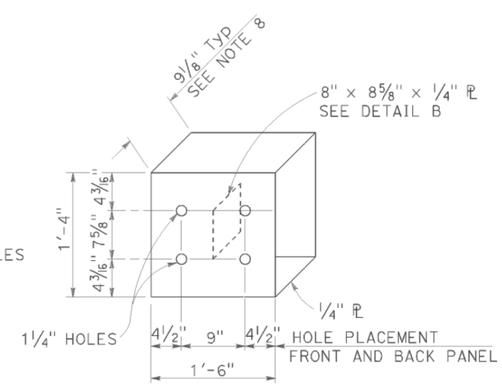

DETAIL A

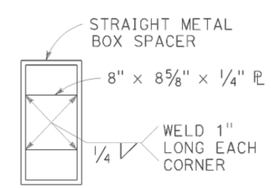

DETAIL B

STRAIGHT METAL BOX SPACER

STATE OF CALIFORNIA
DEPARTMENT OF TRANSPORTATION

MIDWEST GUARDRAIL SYSTEM CONNECTIONS TO BRIDGE RAILINGS WITHOUT SIDEWALKS DETAILS No. 1

NO SCALE

RSP A77U1 DATED JULY 19, 2013 SUPPLEMENTS THE STANDARD PLANS BOOK DATED 2010.

REVISED STANDARD PLAN RSP A77U1

2010 REVISED STANDARD PLAN RSP A77U1

DATE PLOTTED => 30-MAR-2015
TIME PLOTTED => 09:30

Dist	COUNTY	ROUTE	POST MILES TOTAL PROJECT	SHEET No.	TOTAL SHEETS
02	Sha	299	47.5/48.1	56	64

Randell D. Hiatt
REGISTERED CIVIL ENGINEER

January 23, 2015
PLANS APPROVAL DATE

REGISTERED PROFESSIONAL ENGINEER
Randell D. Hiatt
No. C50200
Exp. 6-30-15
CIVIL
STATE OF CALIFORNIA

THE STATE OF CALIFORNIA OR ITS OFFICERS OR AGENTS SHALL NOT BE RESPONSIBLE FOR THE ACCURACY OR COMPLETENESS OF SCANNED COPIES OF THIS PLAN SHEET.

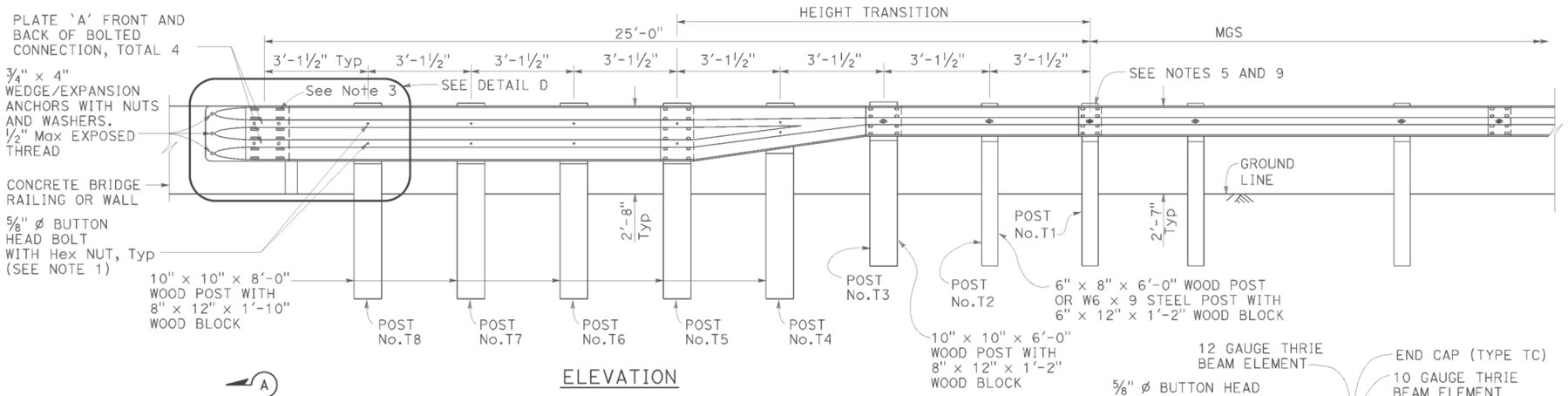

ELEVATION

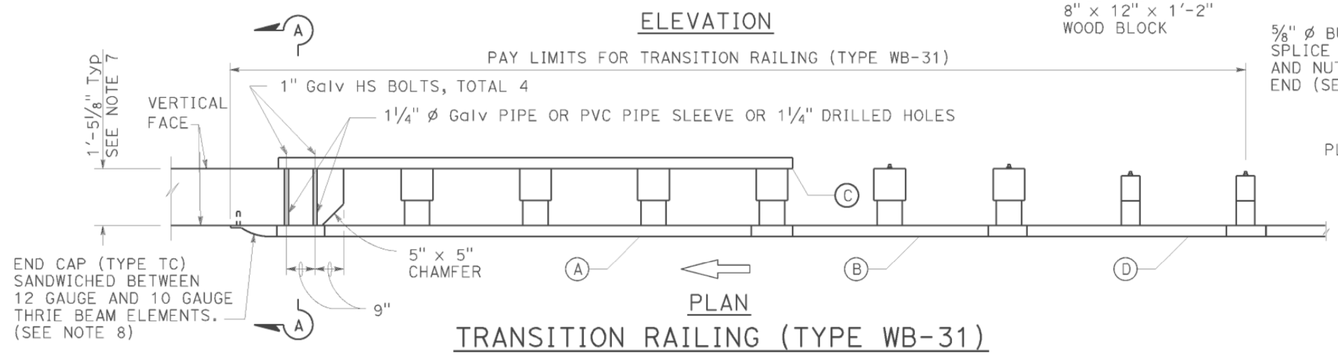

PLAN

TRANSITION RAILING (TYPE WB-31)

(No Blockout Attachment)

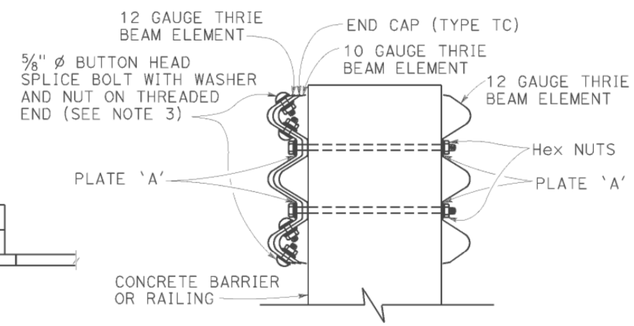

SECTION A-A

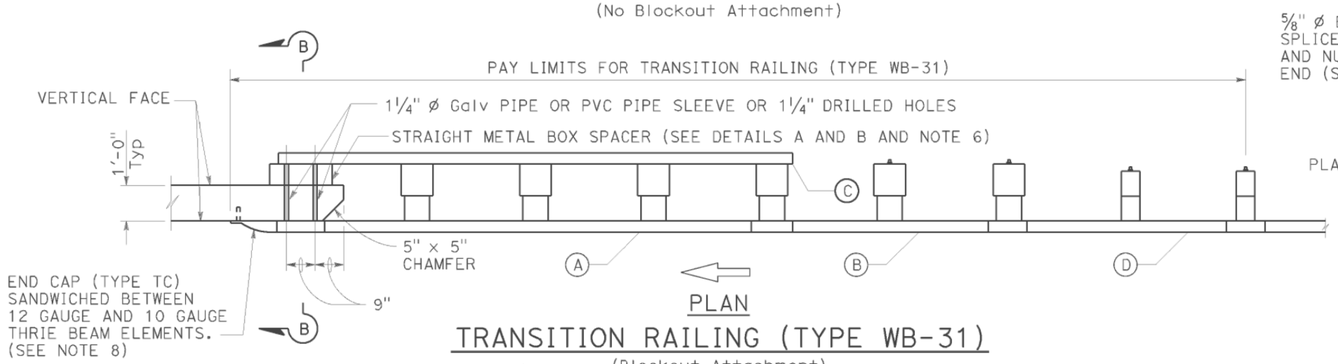

PLAN

TRANSITION RAILING (TYPE WB-31)

(Blockout Attachment)

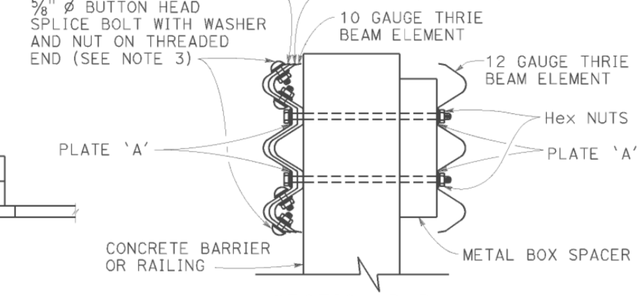

SECTION B-B

LEGEND:

- (A) NESTED THRIE BEAM ELEMENTS (ONE 12 GAUGE ELEMENT NESTED OVER ONE 10 GAUGE ELEMENT).
- (B) ONE ASYMMETRICAL 10 GAUGE "W" BEAM TO THRIE BEAM ELEMENT.
- (C) ONE 12 GAUGE THRIE BEAM ELEMENT.
- (D) ONE 10 GAUGE "W" BEAM RAIL ELEMENT (7'-3 1/2"LENGTH)

10 GAUGE = 0.138" THICK
12 GAUGE = 0.108" THICK

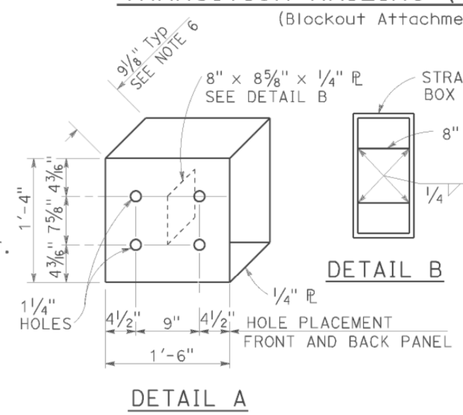

DETAIL A

STRAIGHT METAL BOX SPACER

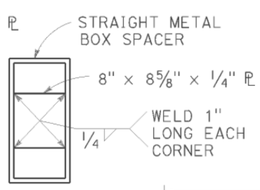

DETAIL B

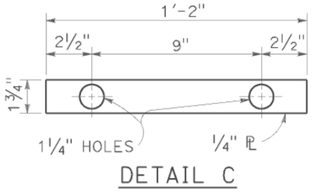

DETAIL C

PLATE 'A'

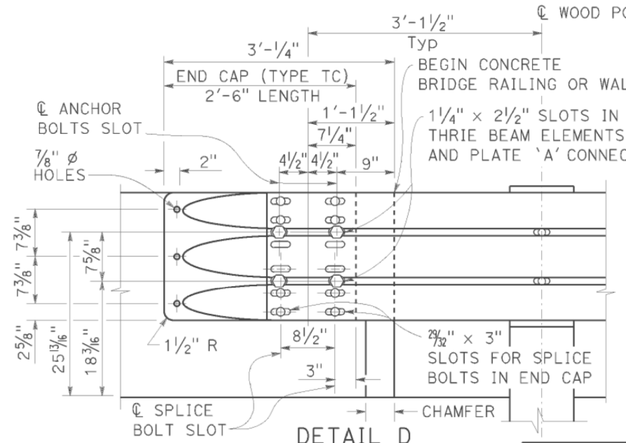

DETAIL D

NOTES:

TO ACCOMPANY PLANS DATED 03-26-15

1. Use 5/8" ø Button head bolts and hex nuts for connections to posts. No washer on rail face for bolted connections to post.
2. The nested rail elements, end cap, and 'W' beam to thrie beam element may be spliced together prior to bolting the elements to the wood post and concrete barrier or railing.
3. Exterior splice bolt holes for rail element splices at Post No. T5 and the connection to the concrete barrier or railing shall be the standard 29/32" x 1 1/8" slot size. Interior splice bolt holes at these locations may be increased up to 1 1/4" ø. Only the top 4 and the bottom 4 splice bolts with washers and nuts are required for rail splices at Post No. T5 and the connection to the concrete barrier or railing.
4. The top elevation of Posts No. T2 through No. T7 shall not project more than 1" above the top elevation of the rail element.
5. Typically, the railing connected to Transition Railing (Type WB-31) will be either standard railing section of MGS with height transition ratio of 150:1 or a Caltrans approved 31" end treatment attached to Post No. T1.
6. The depth of the metal box spacer varies from the 9 1/8" to 1 1/2" and is dependent on the width of the concrete railing or wall. The combined dimension for the depth of the metal box spacer plus the width of railing or wall is typically 21 1/8". Where the space between the backside of the concrete railing or wall and the rear thrie beam element is less than 1 1/2", metal plates similar to Plate 'A' are to be used as spacers.
7. Where the width of the concrete railing or wall is greater than 17 1/8", wood blocks are to be used to fill the space created between the backside of Posts No. T5 through No. T8 and the rear thrie beam element. These wood blocks shall be 8" in width and 1'-2" in length. The dimension between the front thrie beam element and the rear thrie beam element is to match the width of the concrete railing or wall.
8. End cap may be installed over 12 gauge and 10 gauge thrie beam elements where transition railing is installed on the departure end of bridge railing.
9. Conform standard railing section height to 31" at Post No. T1 using height transition ratio of 150:1.

STATE OF CALIFORNIA
DEPARTMENT OF TRANSPORTATION

MIDWEST GUARDRAIL SYSTEM TRANSITION RAILING (TYPE WB-31)

NO SCALE

RSP A77U4 DATED JANUARY 23, 2015 SUPERSEDES RSP A77U4 DATED NOVEMBER 15, 2013 AND RSP A77U4 DATED JULY 19, 2013 THAT SUPPLEMENTS THE STANDARD PLANS BOOK DATED 2010.

REVISED STANDARD PLAN RSP A77U4

2010 REVISED STANDARD PLAN RSP A77U4

DATE PLOTTED => 30-MAR-2015
TIME PLOTTED => 09:30

DIST	COUNTY	ROUTE	POST MILES TOTAL PROJECT	SHEET No.	TOTAL SHEETS
02	Sha	299	47.5/48.1	57	64

REGISTERED CIVIL ENGINEER

November 15, 2013
PLANS APPROVAL DATE

Cornelis M. Hakim
No. C55610
Exp. 12-31-14
CIVIL
STATE OF CALIFORNIA
REGISTERED PROFESSIONAL ENGINEER

THE STATE OF CALIFORNIA OR ITS OFFICERS OR AGENTS SHALL NOT BE RESPONSIBLE FOR THE ACCURACY OR COMPLETENESS OF SCANNED COPIES OF THIS PLAN SHEET.

TO ACCOMPANY PLANS DATED 03-26-15

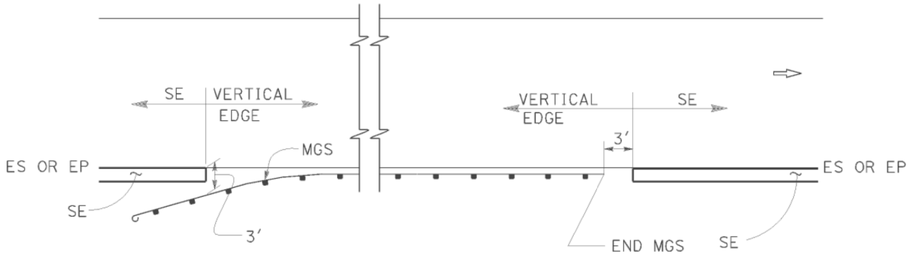

MGS

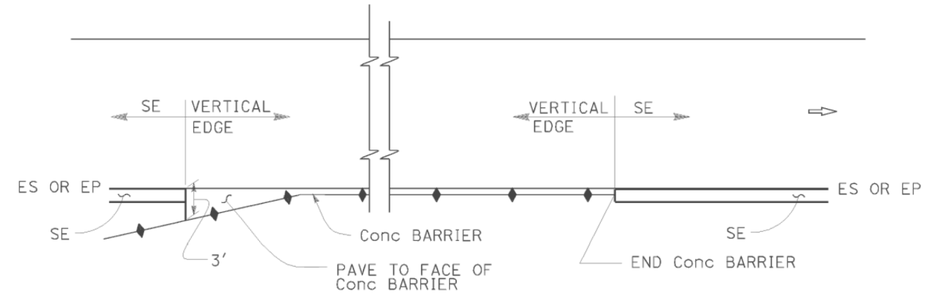

CONCRETE BARRIER

ABBREVIATIONS:

SE SAFETY EDGE

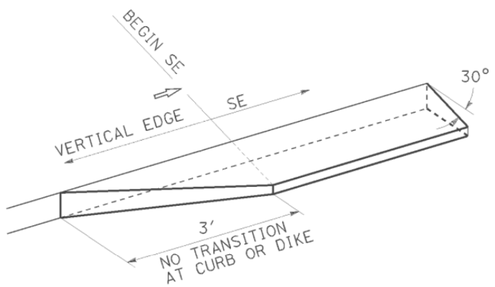

TRANSITION DETAIL FOR CONCRETE ONLY

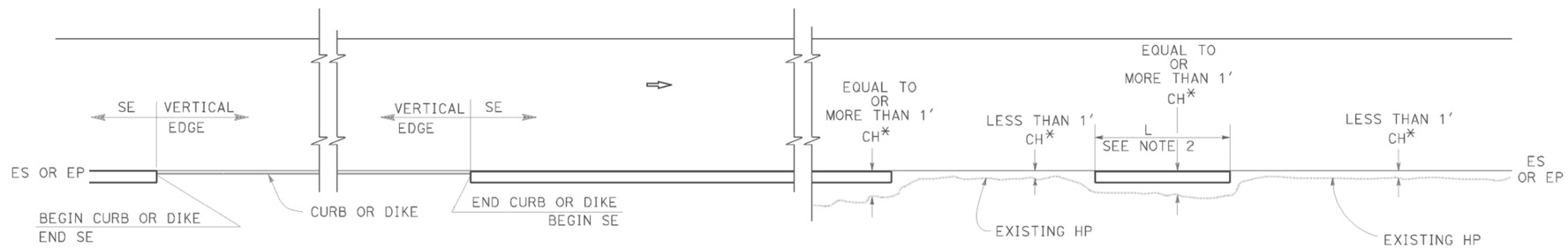

CURB OR DIKE

NARROW SIDE SLOPE

* CH = Distance from ES or EP to existing HP.

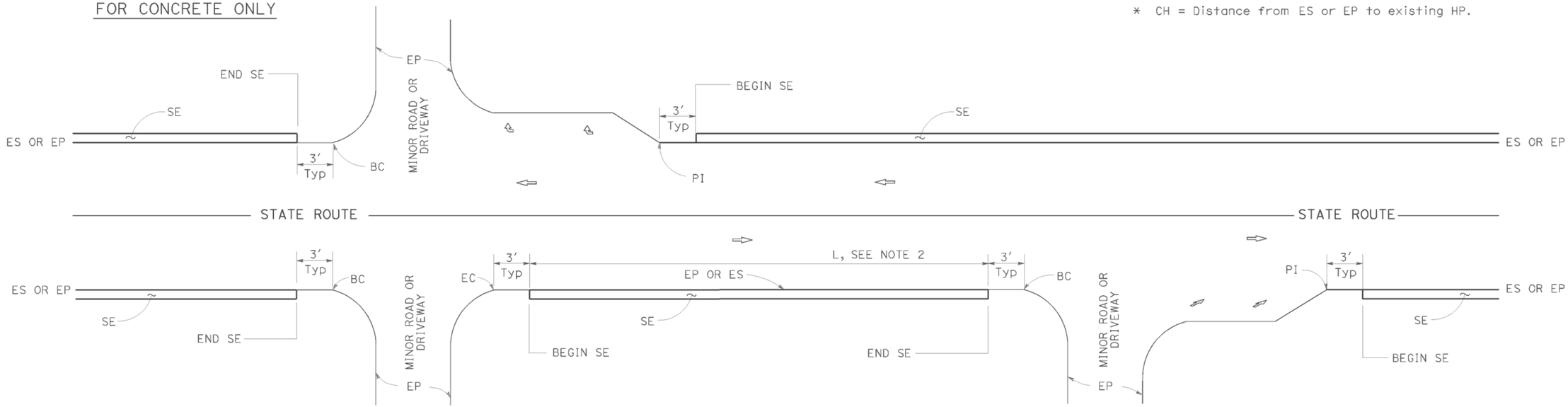

INTERSECTION

MINOR ROADWAY OR DRIVEWAY

DRIVEWAY AND INTERSECTION

NOTES:

1. For details not shown, see Revised Standard Plans RSP P75 and RSP P76.
2. Safety edge is optional when L is less than 30'.

STATE OF CALIFORNIA
DEPARTMENT OF TRANSPORTATION

PAVEMENT EDGE TREATMENTS

NO SCALE

RSP P74 DATED NOVEMBER 15, 2013 SUPERSEDES RSP P74 DATED JANUARY 20, 2012 THAT SUPPLEMENTS THE STANDARD PLANS BOOK DATED 2010.

REVISED STANDARD PLAN RSP P74

2010 REVISED STANDARD PLAN RSP P74

DATE PLOTTED => 30-MAR-2015
TIME PLOTTED => 09:31

DIST	COUNTY	ROUTE	POST MILES TOTAL PROJECT	SHEET No.	TOTAL SHEETS
02	Sha	299	47.5/48.1	58	64

REGISTERED CIVIL ENGINEER

November 15, 2013
PLANS APPROVAL DATE

REGISTERED PROFESSIONAL ENGINEER Cornelis M. Hakim No. C55610 Exp. 12-31-14 CIVIL STATE OF CALIFORNIA

THE STATE OF CALIFORNIA OR ITS OFFICERS OR AGENTS SHALL NOT BE RESPONSIBLE FOR THE ACCURACY OR COMPLETENESS OF SCANNED COPIES OF THIS PLAN SHEET.

TO ACCOMPANY PLANS DATED 03-26-15

LEGEND:

- HMA PAVEMENT
- HMA OR CONCRETE PAVEMENT
- CONCRETE PAVEMENT

ABBREVIATIONS:

SE SAFETY EDGE
TT TOTAL THICKNESS OF SE
HW HINGE WIDTH, DISTANCE FROM ES OR EP TO HP

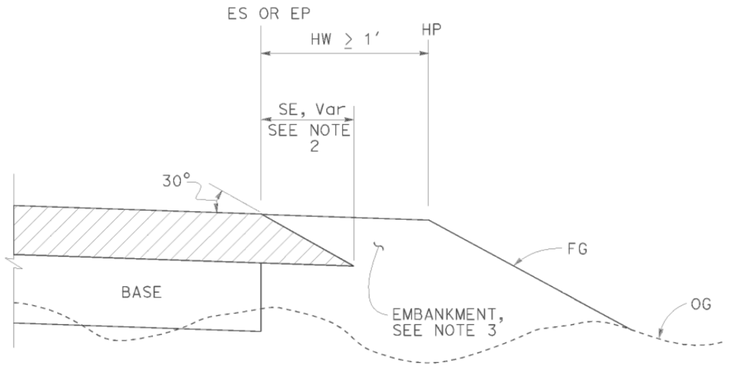

CASE K
Safety Edge - Fill Section, HW ≥ 1′

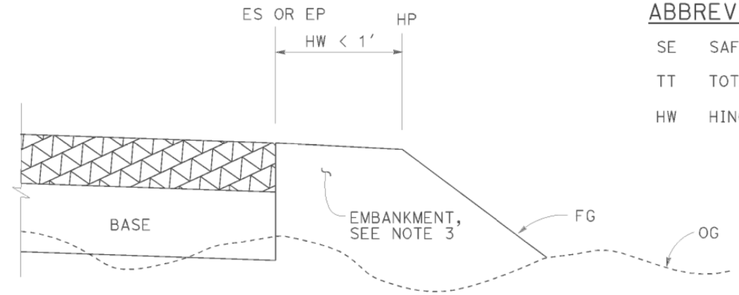

CASE L
Vertical Edge - Fill Section, HW < 1′

FILL SECTION

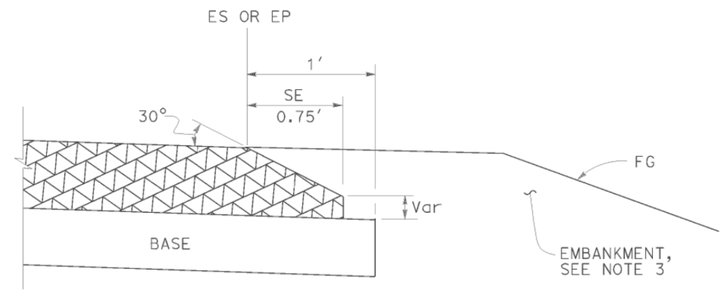

DETAIL "B"
For HMA pavement thickness more than 0.43′ or concrete pavement

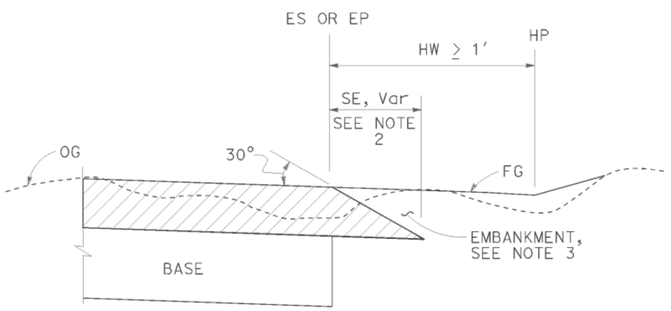

CASE M
Safety Edge - Cut Section, HW ≥ 1′

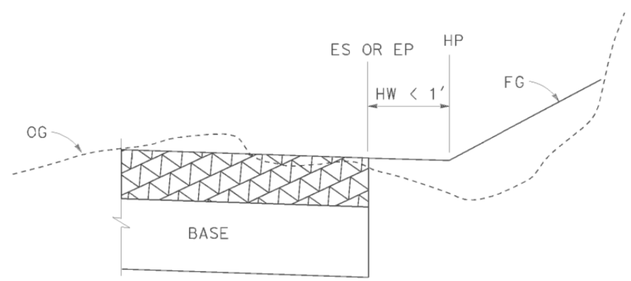

CASE N
Vertical Edge - Cut Section, HW < 1′

CUT SECTION

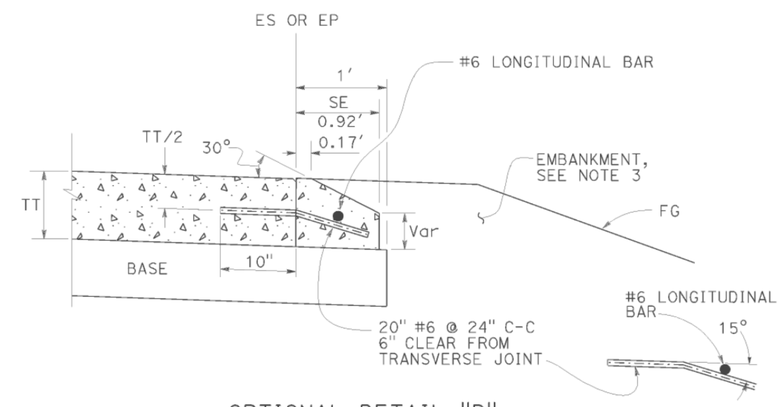

OPTIONAL DETAIL "B"
For concrete pavement
See Note 4

NOTES:

1. For limits of safety edge and vertical edge treatments, see Revised Standard Plan RSP P74
2. Details shown for HMA pavement thickness less than 0.43′. See Detail "B" for HMA pavement thickness more than 0.43′ or concrete pavement.
3. For locations and limits of embankment see project plans.
4. Safety edge transverse joint must match pavement transverse joint. End of #6 longitudinal bar must be 2" ±½" clear from transverse joint.
5. Safety edge is not needed in the area of MGS, barrier, right turn lane and acceleration lane. See Revised Standard Plan RSP P74.

STATE OF CALIFORNIA
DEPARTMENT OF TRANSPORTATION

PAVEMENT EDGE TREATMENTS-NEW CONSTRUCTION

NO SCALE

RSP P76 DATED NOVEMBER 15, 2013 SUPERSEDES RSP P76 DATED JANUARY 20, 2012 THAT SUPPLEMENTS THE STANDARD PLANS BOOK DATED 2010.

REVISED STANDARD PLAN RSP P76

2010 REVISED STANDARD PLAN RSP P76

DATE PLOTTED => 30-MAR-2015
TIME PLOTTED => 09:31

Dist	COUNTY	ROUTE	POST MILES TOTAL PROJECT	SHEET No.	TOTAL SHEETS
02	Sha	299	47.5/48.1	59	64

Raymond Don Tsztoo
REGISTERED CIVIL ENGINEER

April 19, 2013
PLANS APPROVAL DATE

REGISTERED PROFESSIONAL ENGINEER Raymond Don Tsztoo No. C37332 Exp. 6-30-14 CIVIL STATE OF CALIFORNIA

THE STATE OF CALIFORNIA OR ITS OFFICERS OR AGENTS SHALL NOT BE RESPONSIBLE FOR THE ACCURACY OR COMPLETENESS OF SCANNED COPIES OF THIS PLAN SHEET.

TO ACCOMPANY PLANS DATED 03-26-15

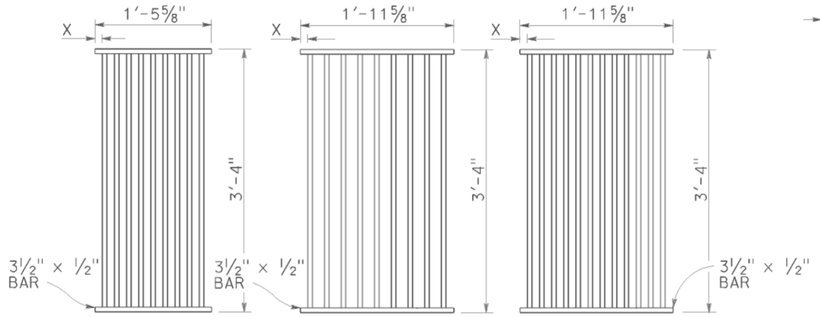

TYPE 18-9

1⅜" Clear spacing. Use within the roadbed on highways where bicycles and pedestrians are excluded.

TYPE 24-9

2" Clear spacing. Use in locations off the roadbed on all types of highways.

TYPE 24-12

1⅜" Clear spacing. Use within the roadbed on highways where bicycles and pedestrians are excluded.

RECTANGULAR GRATE DETAILS

(See table below)

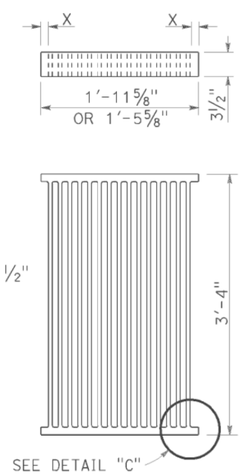

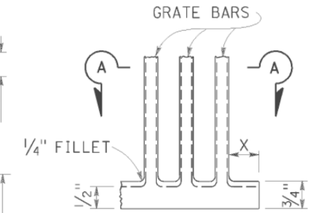

DETAIL "C"

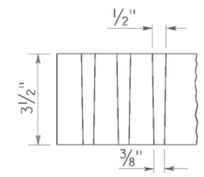

SECTION A-A

ALTERNATIVE CAST DUCTILE IRON GRATE OR CAST CARBON STEEL GRATE

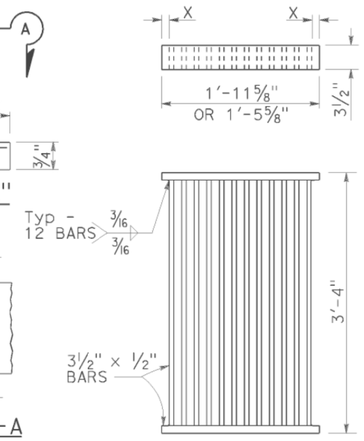

ALTERNATIVE WELDED GRATE

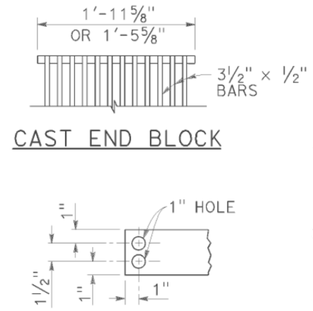

CAST END BLOCK

END OF BAR

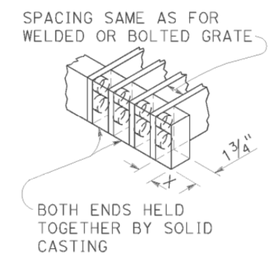

ALTERNATIVE CAST DUCTILE IRON OR CAST CARBON STEEL END BLOCK GRATE

NOTES:

1. Grate type numbers refer to approximate width of grate in inches and number of bars, respectively.
2. Contractor has the option of using cast ductile iron, cast carbon steel, welded, bolted, or cast end block grate.
3. Rounded top of bars optional on all grates.
4. Pipe inlets with a grate shall be placed so that bars parallel direction of principle surface flow.
5. Complete joint penetration butt welds may be substituted for the fillet welds on all anchors.
6. Standard square, hexagon, round or equivalent headed anchors may be substituted for the right angle hooks on the anchors shown on this plan.
7. Grate and frame weights are based on welded grates (weights of face angles, steps, protection bars, etc. are not included).
8. Connect chain to grate and frame only at locations shown on the plans. When chain is required, do not use cast ductile iron grates.

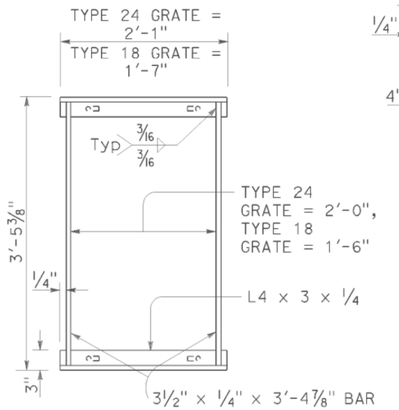

TYPICAL FRAME

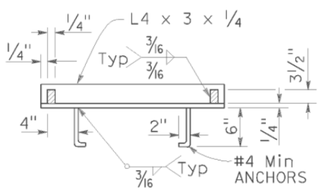

CROSS SECTION

(Thru frame)

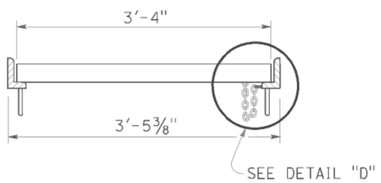

LONGITUDINAL SECTION

(Thru frame and grate)

RECTANGULAR FRAME DETAILS

(For all rectangular grates)

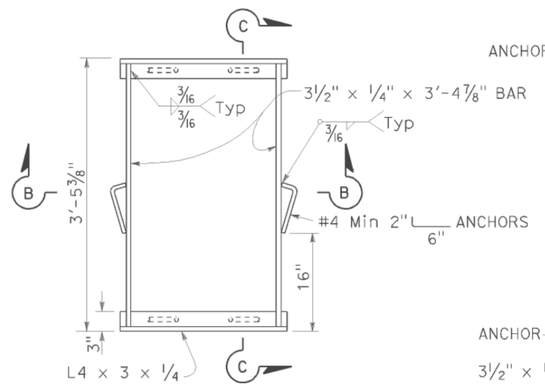

TYPICAL FRAME

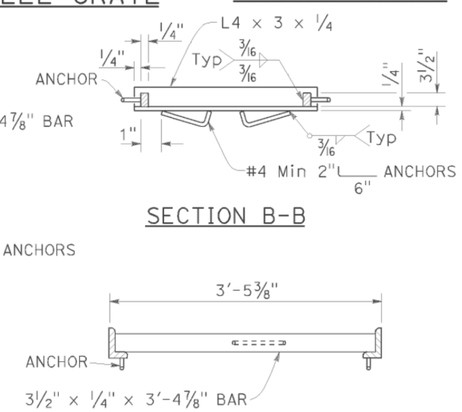

SECTION B-B

SECTION C-C

ALTERNATIVE ANCHOR FOR RECTANGULAR FRAME

(For details not shown, See Rectangular Frame Details)

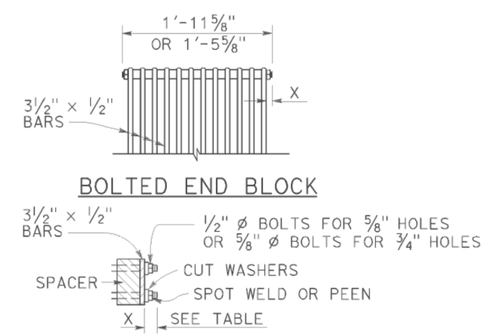

ALTERNATIVE BOLTED GRATE

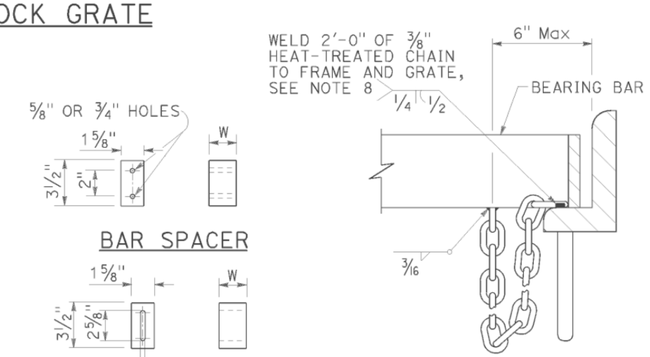

GRATE BAR SPACING TABLE

TYPE	No. OF BARS	CLEAR BAR SPACING	X
18-9	9	1⅜"	1 1/16"
24-9	9	2"	1 9/16"
24-12	12	1⅜"	1¼"

INLET TYPE	COVER TYPE	WEIGHT LB
OS	PLATE	174
OL-7	PLATE	170
OL-10	PLATE	170
OL-14	PLATE	170
OL-21	PLATE	170
OCP	PLATE	112
OCPI	PLATE	112
OCPI	REDWOOD	42
OMP	PLATE	177
OMPI	PLATE	177

INLET TYPE	GRATE TYPE	No. OF GRATES	WEIGHT LB
GDO	24-12	2	634
GOL-7	24-12	1	326
GOL-10	24-12	1	326
GO,G1,G2,G3,G4 (TYPE 24)	24-9	1	263
	24-12	1	326
G4 (TYPE 18),G5,G6	18-9	1	249
GT1	18-9	2	498
GT2	18-9	2	498
GT3	24-12	2	652
GT4	24-12	2	652
TRASH RACK			22
GRATE CHAIN			3

BASIS FOR Misc IRON & STEEL FINAL PAY WEIGHTS FOR DRAINAGE INLETS

(See Note 7)

STATE OF CALIFORNIA
DEPARTMENT OF TRANSPORTATION

GRATE DETAILS No. 1

NO SCALE

RSP D77A DATED APRIL 19, 2013 SUPERSEDES RSP D77A DATED JULY 20, 2012 AND STANDARD PLAN D77A DATED MAY 20, 2011 - PAGE 164 OF THE STANDARD PLANS BOOK DATED 2010.

REVISED STANDARD PLAN RSP D77A

2010 REVISED STANDARD PLAN RSP D77A

DATE PLOTTED => 30-MAR-2015
TIME PLOTTED => 09:31

Dist	COUNTY	ROUTE	POST MILES TOTAL PROJECT	SHEET No.	TOTAL SHEETS
02	Sha	299	47.5/48.1	60	64

REGISTERED CIVIL ENGINEER

April 19, 2013
PLANS APPROVAL DATE

Raymond Don Tsztoo No. C37332 Exp. 6-30-14 CIVIL STATE OF CALIFORNIA REGISTERED PROFESSIONAL ENGINEER

THE STATE OF CALIFORNIA OR ITS OFFICERS OR AGENTS SHALL NOT BE RESPONSIBLE FOR THE ACCURACY OR COMPLETENESS OF SCANNED COPIES OF THIS PLAN SHEET.

TO ACCOMPANY PLANS DATED 03-26-15

2010 REVISED STANDARD PLAN RSP D77B

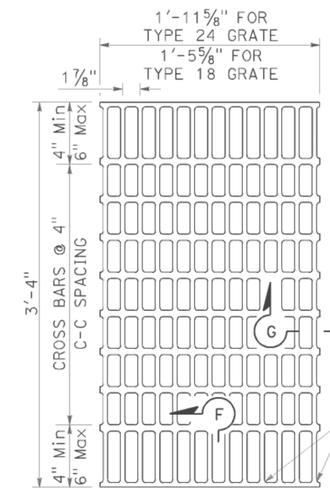

NOTES:

Bearing bars to be 3½" × ¼" bars on 1⅞" centers.

⅜"± ø Cross bars may be fillet welded, resistance welded or electroforged to bearing bars.

Weight of Type 24 grate = 141 LBS.

Weight of Type 18 grate = 107 LBS. (Type 24 grate shown).

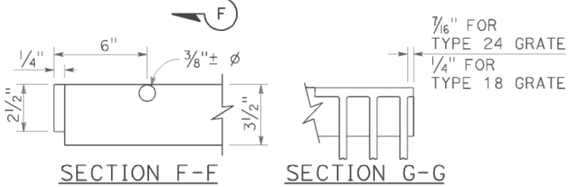

SECTION F-F SECTION G-G

TYPE 18-10 AND 24-13 GRATE

(Welded Steel)

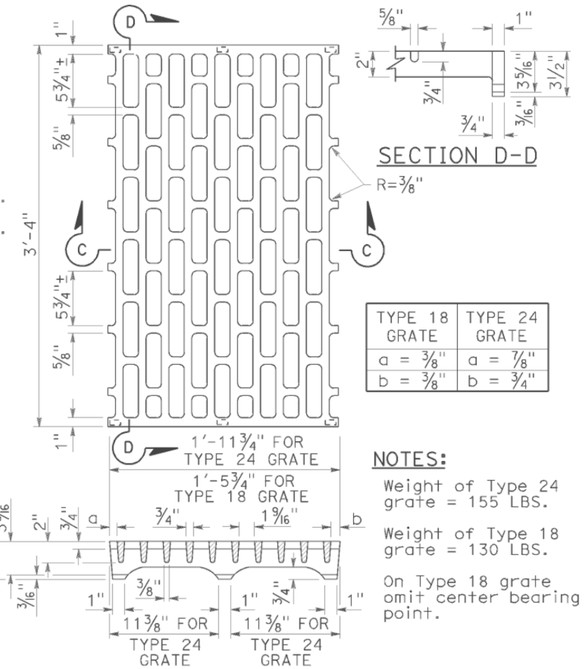

SECTION D-D

NOTES:

Weight of Type 24 grate = 155 LBS.

Weight of Type 18 grate = 130 LBS.

On Type 18 grate omit center bearing point.

SECTION C-C

TYPE 18-8C AND 24-10C GRATE

(Cast ductile iron)

TYPE 18 GRATE	TYPE 24 GRATE
a = ⅜"	a = ⅞"
b = ⅜"	b = ¾"

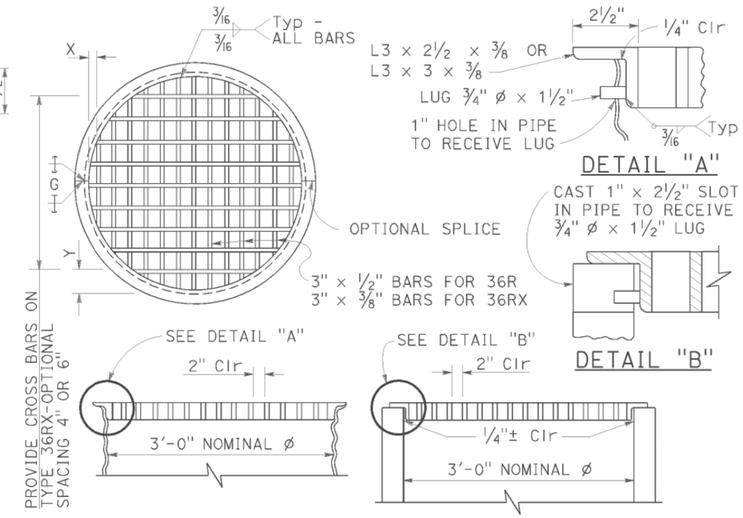

DETAIL "A"

DETAIL "B"

TYPE 36R AND 36RX GRATE DETAILS

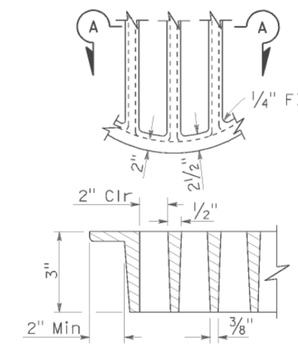

SECTION A-A

ALTERNATIVE CAST DUCTILE IRON GRATE OR CAST CARBON STEEL GRATE TYPE 36R AND 36RX

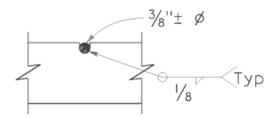

⅜"± ø Cross bars may be fillet welded, resistance welded or electroforged to bearing bars.

CROSS BAR DETAIL TYPE 36RX GRATE (WELDED STEEL)

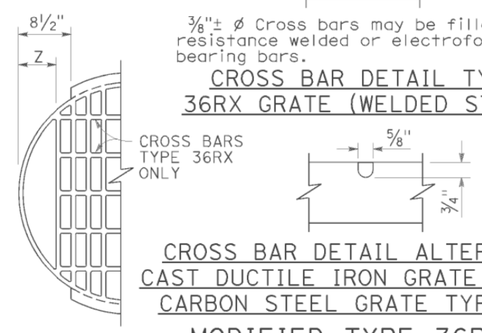

CROSS BAR DETAIL ALTERNATIVE CAST DUCTILE IRON GRATE OR CAST CARBON STEEL GRATE TYPE 36RX

MODIFIED TYPE 36R AND 36RX GRATE FOR ODI INLET

BASIS FOR Misc IRON AND STEEL FINAL PAY WEIGHTS FOR DRAINAGE INLETS

INLET TYPE	GRATE TYPE	No. OF GRATES	WEIGHT LB
GDO (SEE NOTE 4)	24-10C	2	391
	24-10S	2	456
	24-12X	2	473
	24-13	2	374
GO,GOL,G1,G2, G3,G4 (TYPE 24)	24-10C	1	202
	24-10S	1	229
	24-12X	1	239
	24-13	1	188
G4 (TYPE 18) G5,G6	18-8S	1	187
	18-9X	1	187
	18-10	1	149
GT1,GT2	18-8S	2	374
	18-9X	2	374
	18-10	2	298
GT3,GT4	24-10C	2	404
	24-10S	2	458
	24-12X	2	478
	24-13	2	376
ODI	36RX (Mod)	1	196
GMP,GCP,GCPI	36RX	1	215
ODI	36R (Mod)	1	220
GMP,GCP,GCPI	36R	1	236
TRASH RACK			22
GRATE CHAIN			3

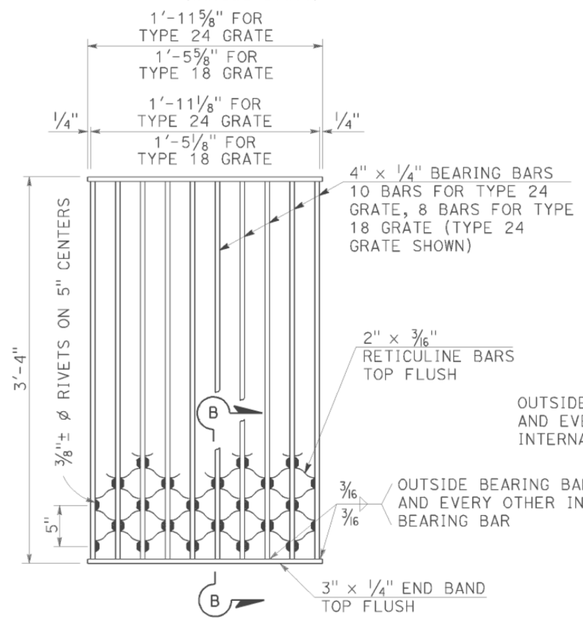

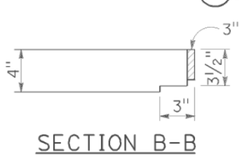

NOTES:

Weight of Type 24 grate = 182 LBS.
Weight of Type 18 grate = 145 LBS.

SECTION B-B

TYPE 18-8S AND 24-10S GRATE

(Welded Steel) Reticuline type

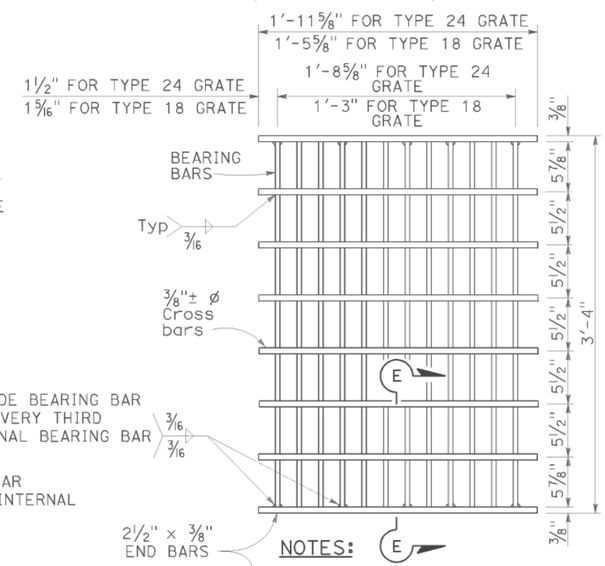

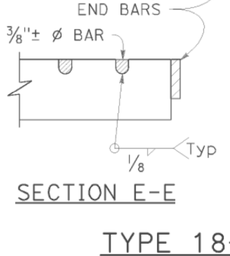

SECTION E-E

NOTES:

Bearing bars to be 3½" × ⅜" bars on 1⅞" centers.

12 Bars for Type 24 grate - 9 bars for Type 18 grates. (Type 24 grate shown).

Weight of Type 24 grate = 192 LBS.

Weight of Type 18 grate = 145 LBS.

⅜"± ø Cross bars may be fillet welded, resistance welded or electroforged to bearing bars.

TYPE 18-9X AND 24-12X GRATE

(Welded Steel)

NOTES:

1. When alternative grates are allowed - Final pay based on alternative with the lesser weight.
2. Use frame shown on Standard Plan D74A, D74B or RSP D77A as appropriate.
3. When Type 24-10S, 24-12X or 24-13 grates are used with GDO Inlets, a ¼" × 3½" × 3'-4⅞" steel bar shall be welded across the center of inlet frame to separate the individual grates.
4. See Revised Standard Plan RSP D77A for connecting chain to welded grate and frame. When chain is required, do not use cast ductile iron grate.

GRATE BAR SPACING TABLE

TYPE	No. OF BARS	CLEAR BAR SPACING	X	Y 4" SPACING	Y 6" SPACING	Z
36R	13	2"	2⅛"	-	-	-
36RX (STEEL)	15	2"	9/16"	3¾"	5¾"	-
36RX (CAST)	13	2"	2⅛"	3¾"	5¾"	-
36R Mod	12	2"	2⅛"	-	-	5"
36RX Mod (STEEL)	13	2"	9/16"	3¾"	5¾"	5 11/16"
36RX Mod (CAST)	12	2"	2⅛"	3¾"	5¾"	5"

STATE OF CALIFORNIA
DEPARTMENT OF TRANSPORTATION

GRATE DETAILS No. 2

NO SCALE

RSP D77B DATED APRIL 19, 2013 SUPERSEDES RSP D77B DATED JULY 20, 2012 AND STANDARD PLAN D77B DATED MAY 20, 2011 - PAGE 165 OF THE STANDARD PLANS BOOK DATED 2010.

REVISED STANDARD PLAN RSP D77B

DATE PLOTTED => 30-MAR-2015
TIME PLOTTED => 09:31

Dist	COUNTY	ROUTE	POST MILES TOTAL PROJECT	SHEET No.	TOTAL SHEETS
02	Sha	299	47.5/48.1	61	64

REGISTERED CIVIL ENGINEER

July 18, 2014
PLANS APPROVAL DATE

REGISTERED PROFESSIONAL ENGINEER Carl M. Duan No. C59976 Exp. 6-30-16 CIVIL STATE OF CALIFORNIA

THE STATE OF CALIFORNIA OR ITS OFFICERS OR AGENTS SHALL NOT BE RESPONSIBLE FOR THE ACCURACY OR COMPLETENESS OF SCANNED COPIES OF THIS PLAN SHEET.

TO ACCOMPANY PLANS DATED 03-26-15

DESIGN NOTES:

Design Specifications:
AASHTO LRFD Bridge Design Specifications, 4th Edition with California Amendments.

Loading:
Live load: (AASHTO LRFD 3.6.1.2)
HL-93 consists of design truck or design tandem and design lane load.

Impact Factor: (Apply to roof slab only)
$IM = 33(1.0-0.125D_E) \geq 0\%$ (AASHTO LRFD 3.6.2.2)
D_E = minimum depth of earth cover

Earth load:
Earth pressure for two conditions:
140 pcf vertical, 42 pcf horizontal
140 pcf vertical, 140 pcf horizontal

Load Factors:
AASHTO LRFD Table 3.4.1.1 & Table 3.4.1.2

Unit stresses:
f'_c = 3600 psi
f_y = 60,000 psi

Distribution "d" bars:
Up to and including 10'-0" cover
Express as a percentage of main positive reinforcement required: $\frac{100}{\sqrt{S}}$, Max 50%,
Over 10'-0" cover,
4 @ 12 maximum

Shear:
$V_c = \{2.14\sqrt{f'_c}+4600\frac{A_s}{bd_e}\frac{V_u d_e}{M_u}\}b.d_e \leq 4.0\sqrt{f'_c}b.d_e$ (Pounds)
V_c shall not be less than $3.00\sqrt{f'_c}b.d_e$ for frame members and $2.5\sqrt{f'_c}b.d_e$ for simply supported members.

Exclusion:
Compressive reinforcement and negative moment reduction (for continuity) do not apply.
Axial loading on members has not been considered.

CONSTRUCTION NOTES:

Construction loads:
Strutting required as shown on Standard Plan D88.
Strutting may be required on culvert extensions when existing parapet is removed.

Expansion joints:
Invert:
No expansion joints shall be permitted.

Roof and Walls:
When cover is less than span length-
Place ½" premolded expansion joint filler at 30'-0" ± centers outside the paved roadway lanes and place Bridge Detail 3-2, Standard Plan B0-3, at 30'-0" centers under paved roadway lanes.
When cover is more than span length-
Place ½" premolded expansion joint filler at 30'-0" ± centers and additional ½" premolded expansion joints at locations of change in foundation character, as directed by the Engineer.

Construction joints:
Temporary joints may be permitted if normal (or radial) to ℄ of RCB. Otherwise, the contractor is to submit a proposal for consideration.

Cutoff walls:
4'-0" cutoff walls are to be provided at inlet and/or outlet unless adjacent channel is lined and unless otherwise shown. These walls are to be extended if scour conditions warrant.

Earthwork:
See Standard Plan A62E.

Backfill:
See Standard Specifications, except that the difference in level of backfill (against outside walls) shall not exceed 2'-0".

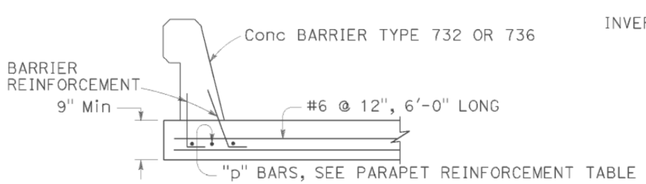

BARRIER SECTION (30'-0" MINIMUM)

GENERAL NOTES:

Designation:
Standard single or multiple box culverts are shown on plans as span times height with maximum cover over roof thus: 8' x 5' RCB with 10' or double 10' x 5' RCB with 20', followed by alternatives.

Alternatives:
Single cell: Invert will be sloped unless "trapezoidal invert", "flat invert" or "V invert" is included in designation.
Multiple cell: Invert will be vee unless "flat invert" is specified. Ends of culvert will be rounded unless "square ends" are designated. Parapets will be as shown unless designated in plans. Such designations may be different for inlet and outlet ends.

Quantities:
Quantities do not include the following:
- Concrete for parapet, paving notches and cut-off wall.
- Reinforcement for 2% splices, parapets, paving notches, cut-off wall and additional required bars for exposed top slab (D-80, Note 9).

Reinforcement placement:
Main reinforcement is to be placed transversely or, for curved culverts, radially. When radial, reinforcing spacing of the "a", "f" and "g" bars is measured along the centerline. Stagger splices not shown. Hooks may be rotated or tilted, as necessary, for clearance.

Special reinforcement coverage:
Box standard plans are not to be used for culverts in a corrosive environment or where there is a severe abrasive flow condition or in freeze-thaw locations.

Special design:
Required for culverts with conditions, loads, design bearing pressures or sizes greater than those given on this plan or Standard Plans D80 & D81. Also required for multiple cell culverts with unequal spans. For culverts with railroad loading, see the current AREMA design specification.

3 or more cells:
For culverts with more than two cells, use dimensions and reinforcement for the standard "double box culvert" and adjust quantities accordingly.

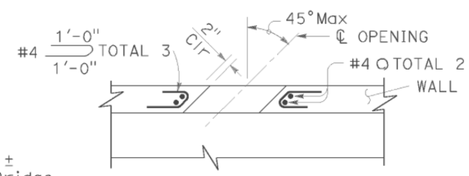

PART PLAN-SECTION

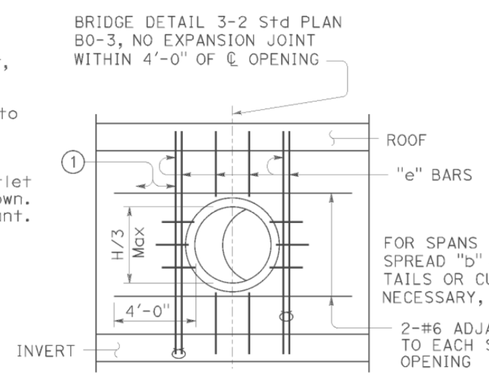

LONGITUDINAL SECTION

UTILITY OPENING-WALL

H=Height of box

(1) Adjacent to each side of the opening, place additional bars equivalent to half the interrupted main reinforcement.

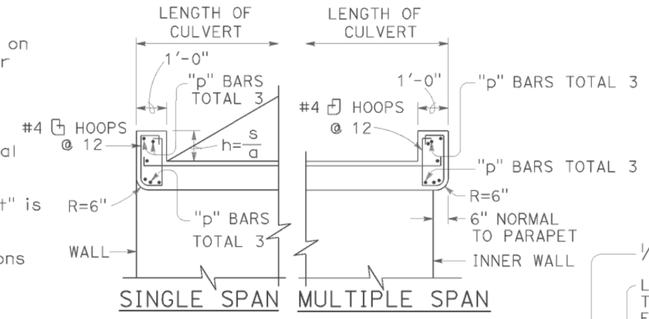

PARAPET DETAIL

s = Clear span (ft)
a = 12 cosine skew angle
h = Height, 1'-0" Min

PARAPET "p" BARS			
SPAN \ SKEW ANGLE	0° TO 15°	16° TO 30°	31° TO 45°
4'	#4	#4	#4
6'	#4	#4	#5
8'	#4	#5	#6
10'	#5	#6	#7
12'	#6	#7	#8
14'	#7	#8	#9

PARAPET REINFORCEMENT

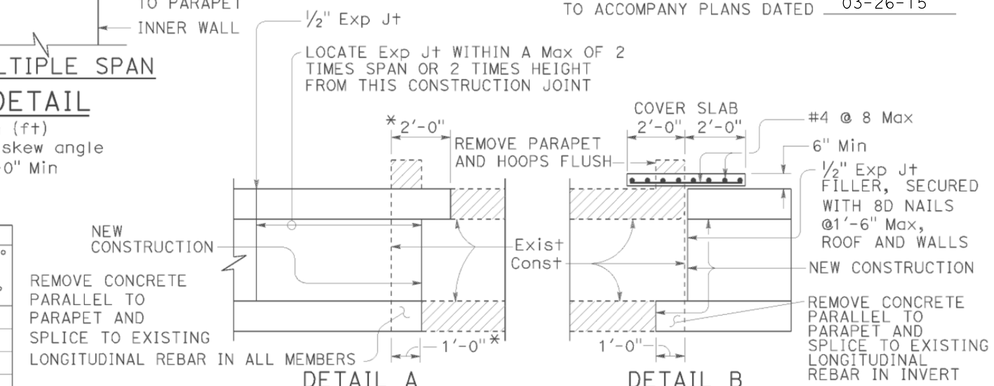

DETAIL A

20° maximum skew as shown. If existing longitudinal and transverse reinforcing bars in top slab are lap spliced with new longitudinal and transverse reinforcing bars, the 20° skew may be exceeded. Lap splicing may require removal of top slab in excess of 2'-0" shown.

DETAIL B

Single cell only, no skew allowed, 1'-0" minimum cover.

* Measured perpendicular to parapet

CULVERT EXTENSION

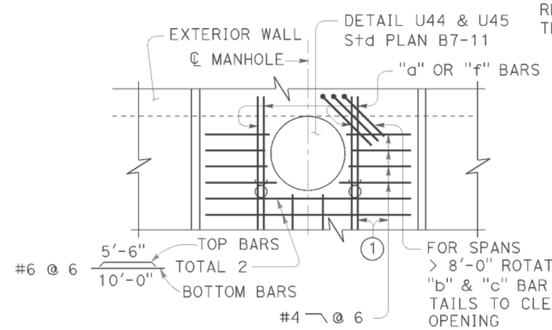

PART PLAN

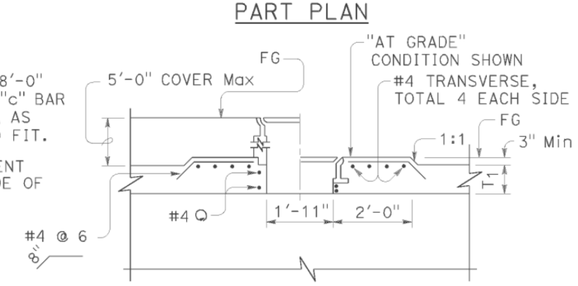

PART LONGITUDINAL SECTION

MANHOLE

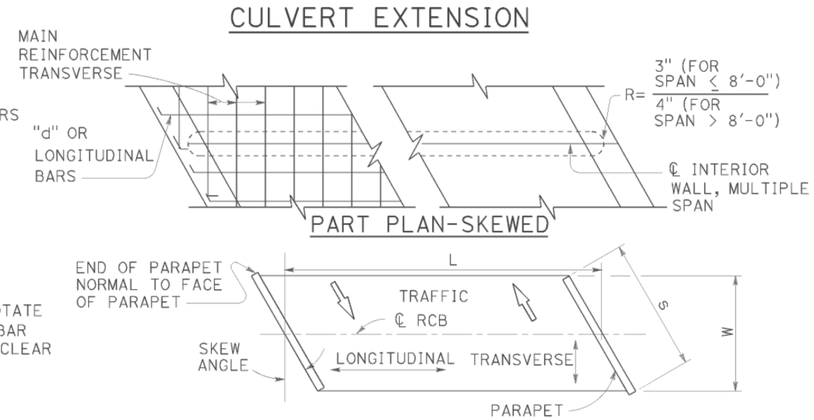

PART PLAN-SKEWED

RCB TERMINOLOGY

STATE OF CALIFORNIA
DEPARTMENT OF TRANSPORTATION

CAST-IN-PLACE REINFORCED CONCRETE BOX CULVERT MISCELLANEOUS DETAILS

NO SCALE

RSP D82 DATED JULY 18, 2014 SUPERSEDES STANDARD PLAN D82 DATED MAY 20, 2011 - PAGE 174 OF THE STANDARD PLANS BOOK DATED 2010.

REVISED STANDARD PLAN RSP D82

2010 REVISED STANDARD PLAN RSP D82

DATE PLOTTED => 30-MAR-2015
TIME PLOTTED => 09:31

Dist	COUNTY	ROUTE	POST MILES TOTAL PROJECT	SHEET No.	TOTAL SHEETS
02	Sha	299	47.5/48.1	62	64

REGISTERED CIVIL ENGINEER

July 19, 2013
PLANS APPROVAL DATE

REGISTERED PROFESSIONAL ENGINEER Gurinderpal Bhullar No. C48815 Exp. 9-30-14 CIVIL STATE OF CALIFORNIA

THE STATE OF CALIFORNIA OR ITS OFFICERS OR AGENTS SHALL NOT BE RESPONSIBLE FOR THE ACCURACY OR COMPLETENESS OF SCANNED COPIES OF THIS PLAN SHEET.

TO ACCOMPANY PLANS DATED 03-26-15

TABLE 1

TAPER LENGTH CRITERIA AND CHANNELIZING DEVICE SPACING

SPEED (S)	MINIMUM TAPER LENGTH * FOR WIDTH OF OFFSET 12 FEET (W)				MAXIMUM CHANNELIZING DEVICE SPACING		
					X	Y	Z **
	TANGENT 2L	MERGING L	SHIFTING L/2	SHOULDER L/3	TAPER	TANGENT	CONFLICT
mph	ft	ft	ft	ft	ft	ft	ft
20	160	80	40	27	20	40	10
25	250	125	63	42	25	50	12
30	360	180	90	60	30	60	15
35	490	245	123	82	35	70	17
40	640	320	160	107	40	80	20
45	1080	540	270	180	45	90	22
50	1200	600	300	200	50	100	25
55	1320	660	330	220	55	110	27
60	1440	720	360	240	60	120	30
65	1560	780	390	260	65	130	32
70	1680	840	420	280	70	140	35

* - For other offsets, use the following merging taper length formula for L:
For speed of 40 mph or less, $L = WS^2/60$
For speed of 45 mph or more, $L = WS$

Where: L = Taper length in feet
W = Width of offset in feet
S = Posted speed limit, off-peak 85th-percentile speed prior to work starting, or the anticipated operating speed in mph

** - Use for taper and tangent sections where there are no pavement markings or where there is a conflict between existing pavement markings and channelizers (CA).

TABLE 2

LONGITUDINAL BUFFER SPACE AND FLAGGER STATION SPACING

SPEED *	Min D **	DOWNGRADE Min D ***		
		-3%	-6%	-9%
mph	ft	ft	ft	ft
20	115	116	120	126
25	155	158	165	173
30	200	205	215	227
35	250	257	271	287
40	305	315	333	354
45	360	378	400	427
50	425	446	474	507
55	495	520	553	593
60	570	598	638	686
65	645	682	728	785
70	730	771	825	891

* - Speed is posted speed limit, off-peak 85th-percentile speed prior to work starting, or the anticipated operating speed in mph

** - Longitudinal buffer space or flagger station spacing

*** - Use on sustained downgrade steeper than -3 percent and longer than 1 mile.

TABLE 3

ADVANCE WARNING SIGN SPACING

ROAD TYPE	DISTANCE BETWEEN SIGNS *		
	A	B	C
	ft	ft	ft
URBAN - 25 mph OR LESS	100	100	100
URBAN - MORE THAN 25 mph TO 40 mph	250	250	250
URBAN - MORE THAN 40 mph	350	350	350
RURAL	500	500	500
EXPRESSWAY / FREEWAY	1000	1500	2640

* - The distances are approximate, are intended for guidance purposes only, and should be applied with engineering judgment. These distances should be adjusted by the Engineer for field conditions, if necessary, by increasing or decreasing the recommmended distances.

STATE OF CALIFORNIA
DEPARTMENT OF TRANSPORTATION

TRAFFIC CONTROL SYSTEM TABLES FOR LANE AND RAMP CLOSURES

NO SCALE

RSP T9 DATED JULY 19, 2013 SUPERSEDES RSP T9 DATED APRIL 19, 2013 THAT SUPPLEMENTS THE STANDARD PLANS BOOK DATED 2010.

REVISED STANDARD PLAN RSP T9

2010 REVISED STANDARD PLAN RSP T9

DATE PLOTTED => 30-MAR-2015
TIME PLOTTED => 09:31

Dist	COUNTY	ROUTE	POST MILES TOTAL PROJECT	SHEET No.	TOTAL SHEETS
02	Sha	299	47.5/48.1	63	64

Devinder Singh
REGISTERED CIVIL ENGINEER

October 17, 2014
PLANS APPROVAL DATE

REGISTERED PROFESSIONAL ENGINEER
Devinder Singh
No. C50470
Exp. 6-30-15
CIVIL
STATE OF CALIFORNIA

THE STATE OF CALIFORNIA OR ITS OFFICERS OR AGENTS SHALL NOT BE RESPONSIBLE FOR THE ACCURACY OR COMPLETENESS OF SCANNED COPIES OF THIS PLAN SHEET.

TO ACCOMPANY PLANS DATED 03-26-15

2010 REVISED STANDARD PLAN RSP T13

NOTES:

See Revised Standard Plan RSP T9 for tables.

Use cone spacing X for taper segment, Y for tangent segment or Z for conflict situations, as approriate, per Table 1, unless X, Y, or Z cone spacing is shown on this sheet.

Unless otherwise specified in the special provisions, all temporary warning signs shall have black legend on fluorescent orange background.

California codes are designated by (CA). Otherwise, Federal (MUTCD) codes are shown.

TYPICAL LANE CLOSURE WITH REVERSIBLE CONTROL

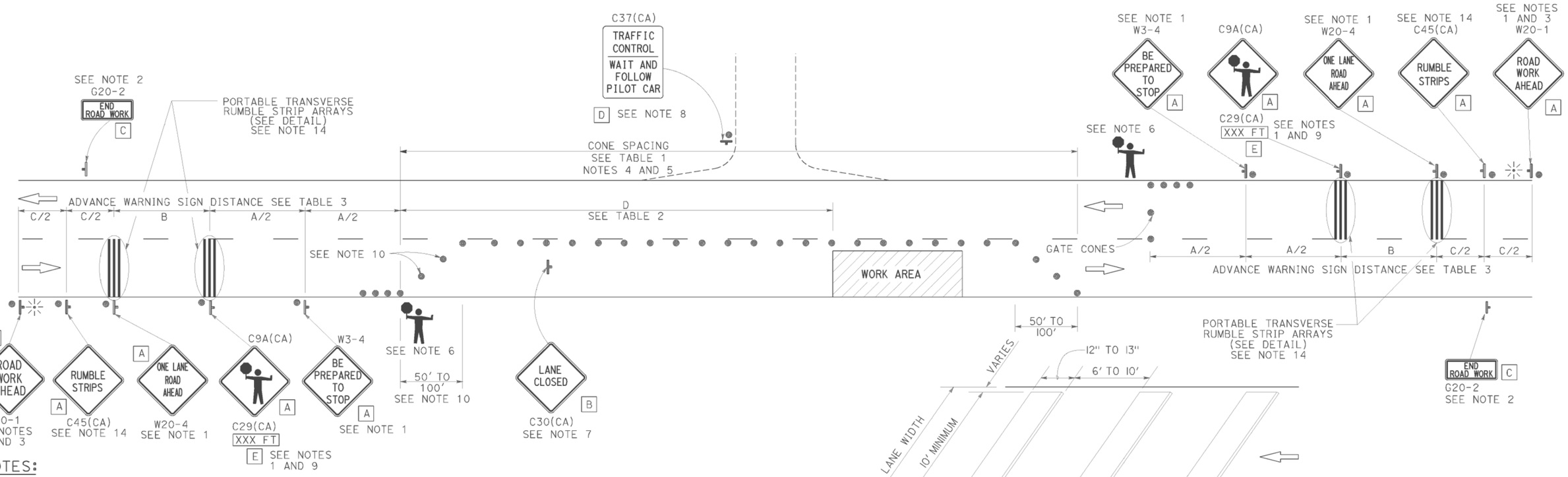

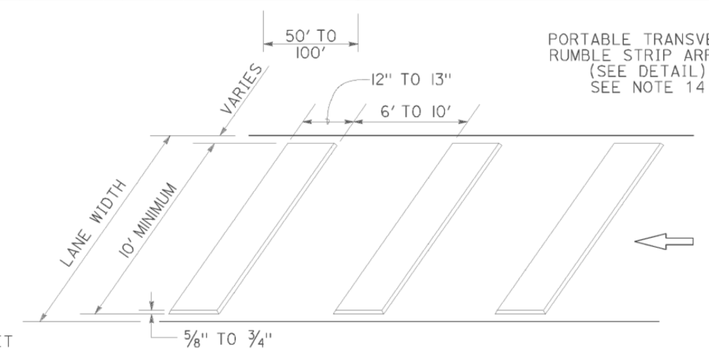

PORTABLE TRANSVERSE RUMBLE STRIP ARRAY DETAIL

NOTES:

1. Each advance warning sign in each direction of travel shall be equipped with at least two flags for daytime closure. Each flag shall be at least 16" x 16" in size and shall be orange or fluorescent red-orange in color. Flashing beacons shall be placed at the locations indicated for lane closure during hours of darkness.
2. A G20-2 "END ROAD WORK" sign, as appropriate, shall be placed at the end of the lane control unless the end of work area is obvious, or ends within a larger project's limits.
3. If the W20-1 sign would follow within 2000' of a stationary W20-1 or G20-1 "ROAD WORK NEXT _____ MILES", use a W20-4 sign for the first advance warning sign.
4. All cones used for lane closures during the hours of darkness shall be fitted with retroreflective bands (or sleeves) as specified in the specifications.
5. Portable delineators, placed at one-half the spacing indicated for traffic cones, may be used instead of cones for daytime closures only.
6. Additional advance flaggers may be required. Flagger should stand in a conspicuous place, be visible to approaching traffic as well as approaching vehicles after the first vehicle has stopped. During the hours of darkness, the flagging-station and flagger shall be illuminated and clearly visible to approaching traffic. The illumination footprint of the lighting on the ground shall be at least 20' in diameter. Place a minimum of four cones at 50' intervals in advance of flagger station as shown.
7. Place C30(CA) "LANE CLOSED" sign at 500' to 1000' intervals throughout extended work areas. They are optional if the work area is visible from the flagger station.
8. When a pilot car is used, place a C37(CA) "TRAFFIC CONTROL-WAIT AND FOLLOW PILOT CAR" sign with black legend on white background at all intersections, driveways and alleys without a flagger within traffic control area. Signs shall be clean and visible at all times. Where traffic can not be effectively self-regulated, at least one flagger shall be used at each intersection within traffic control area.
9. An optional C29(CA) sign may be placed below the C9A(CA) sign.
10. Either traffic cones or barricades shall be placed on the taper. Barricades shall be Type I, II, or III.
11. The color of the portable transverse rumble strips shall be black or orange. Use 2 arrays, each array shall consist of 3 rumble strips.
12. Portable transverse rumble strips shall not be placed on sharp horizontal or vertical curves nor shall they be placed through pedestrian crossings.
13. If the portable transverse rumble strips become out of alignment (skewed) by more than 6 inches, measured from one end to the other, they shall be readjusted to bring the placement back to the original location.
14. Portable transverse rumble strips are not required if any one of the following conditions is satisfied:
    A. Work duration occupies a location for four hours or less
    B. Posted speed limit is below 45 MPH
    C. Work is of emergency nature
    D. Work zone is in snow or icy weather conditions

LEGEND

- TRAFFIC CONE
- TEMPORARY TRAFFIC CONTROL SIGN
- PORTABLE FLASHING BEACON
- FLAGGER

SIGN PANEL SIZE (Min)

A	48" x 48"
B	30" x 30"
C	36" x 18"
D	36" x 42"
E	20" x 7"

STATE OF CALIFORNIA
DEPARTMENT OF TRANSPORTATION

TRAFFIC CONTROL SYSTEM FOR LANE CLOSURE ON TWO LANE CONVENTIONAL HIGHWAYS

NO SCALE

RSP T13 DATED OCTOBER 17, 2014 SUPERSEDES RSP T13 DATED JULY 18, 2014 AND RSP T13 DATED APRIL 19, 2013 AND STANDARD PLAN T13 DATED MAY 20, 2011 - PAGE 241 OF THE STANDARD PLANS BOOK DATED 2010.

REVISED STANDARD PLAN RSP T13

DATE PLOTTED => 30-MAR-2015
TIME PLOTTED => 09:31

Dist	COUNTY	ROUTE	POST MILES TOTAL PROJECT	SHEET No.	TOTAL SHEETS
02	Sha	299	47.5/48.1	64	64

REGISTERED CIVIL ENGINEER

October 21, 2011
PLANS APPROVAL DATE

REGISTERED PROFESSIONAL ENGINEER Tillat Satter No. C42892 Exp. 3-31-12 CIVIL STATE OF CALIFORNIA

THE STATE OF CALIFORNIA OR ITS OFFICERS OR AGENTS SHALL NOT BE RESPONSIBLE FOR THE ACCURACY OR COMPLETENESS OF SCANNED COPIES OF THIS PLAN SHEET.

TO ACCOMPANY PLANS DATED 03-26-15

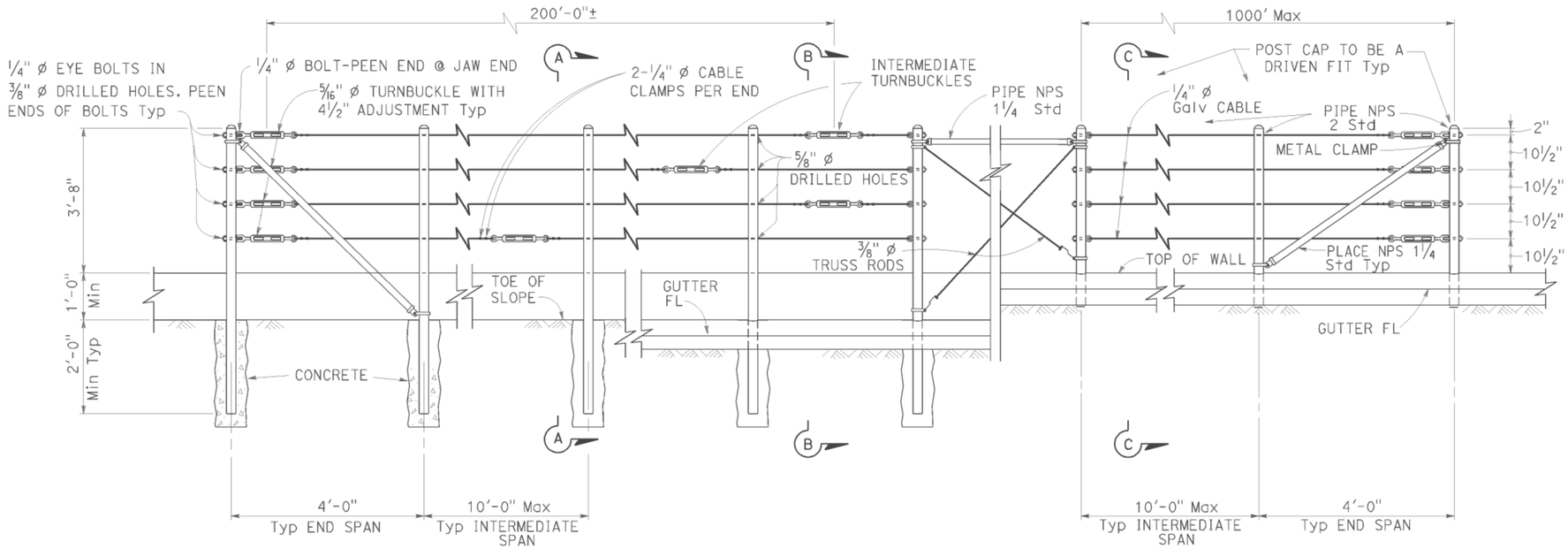

EXISTING WALL (WITHOUT GUTTER)
Existing

RETAINING WALL (WITH GUTTER)
Existing

RETAINING WALL (WITH GUTTER)
New construction

ELEVATION

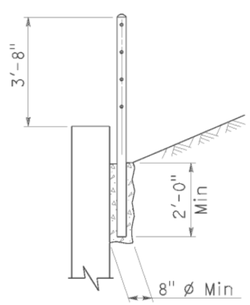

SECTION A-A
Existing

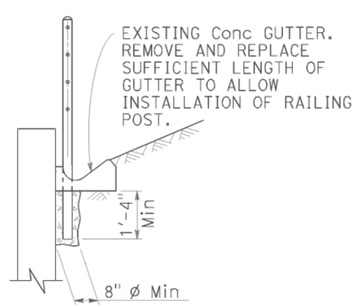

SECTION B-B
Existing

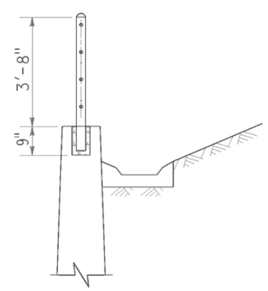

SECTION C-C
New construction

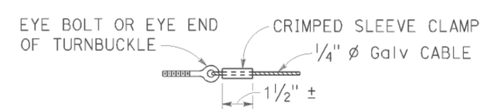

ALTERNATIVE CABLE CONNECTION

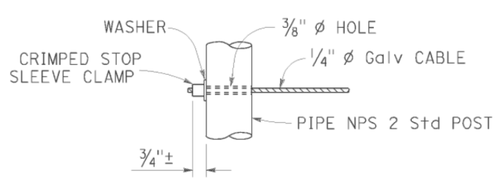

ALTERNATIVE DEAD END ANCHORAGE

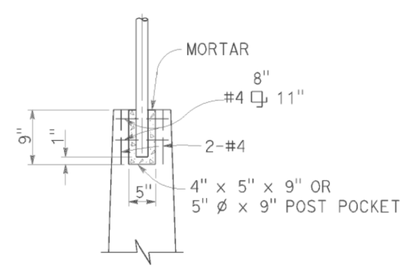

POST POCKET

NOTES:

1. Maximum distance between turnbuckles shall be 200'-0"±.
2. Intermediate turnbuckles to be placed in adjacent spans.
3. Cable shall not be spliced between intermediate turnbuckles and end posts.
4. Posts to be vertical.
5. Alignment of holes in posts may vary to conform to slope of top of retaining wall.
6. The Contractor shall verify all dependent dimensions in the field before ordering or fabricating any material.
7. Line posts shall be braced horizontally and trussed diagonally in both directions at intervals not to exceed 1000'.
8. Post pockets to be centered in top of wall.
9. Typical end spans, braced in both directions, shall be constructed at changes in line where the angle of deflection is 15° or more.
10. Provide thimbles at all cable loops.

STATE OF CALIFORNIA
DEPARTMENT OF TRANSPORTATION

CABLE RAILING

NO SCALE

RSP B11-47 DATED OCTOBER 21, 2011 SUPERSEDES STANDARD PLAN B11-47 DATED MAY 20, 2011 - PAGE 293 OF THE STANDARD PLANS BOOK DATED 2010.

REVISED STANDARD PLAN RSP B11-47

2010 REVISED STANDARD PLAN RSP B11-47

DATE PLOTTED => 30-MAR-2015
TIME PLOTTED => 09:31