INDEX OF PLANS

SHEET No.	DESCRIPTION
1	TITLE AND LOCATION MAP
2-4	TYPICAL CROSS SECTIONS
5-13	CONSTRUCTION DETAILS
14	CONSTRUCTION AREA SIGN
15	PAVEMENT DELINEATION QUANTITIES
16-19	SUMMARY OF QUANTITIES
20-31	REVISED AND NEW STANDARD PLANS

THE STANDARD PLANS LIST APPLICABLE TO THIS CONTRACT IS INCLUDED IN THE NOTICE TO BIDDERS AND SPECIAL PROVISIONS BOOK.

STATE OF CALIFORNIA

DEPARTMENT OF TRANSPORTATION

ACSTP-P049(150)E

Dist	COUNTY	ROUTE	POST MILES TOTAL PROJECT	SHEET No.	TOTAL SHEETS
03	Sie	49	16.9/41.4	1	31

PROJECT PLANS FOR CONSTRUCTION ON

STATE HIGHWAY

IN SIERRA COUNTY NEAR DOWNIEVILLE FROM 0.1 MILE NORTH OF THE DOWNIE RIVER BRIDGE TO YUBA PASS

TO BE SUPPLEMENTED BY STANDARD PLANS DATED MAY 2006

LOCATION MAP

Begin Work
PM 16.7

BEGIN CONSTRUCTION
PM 16.9

END CONSTRUCTION
PM 41.4

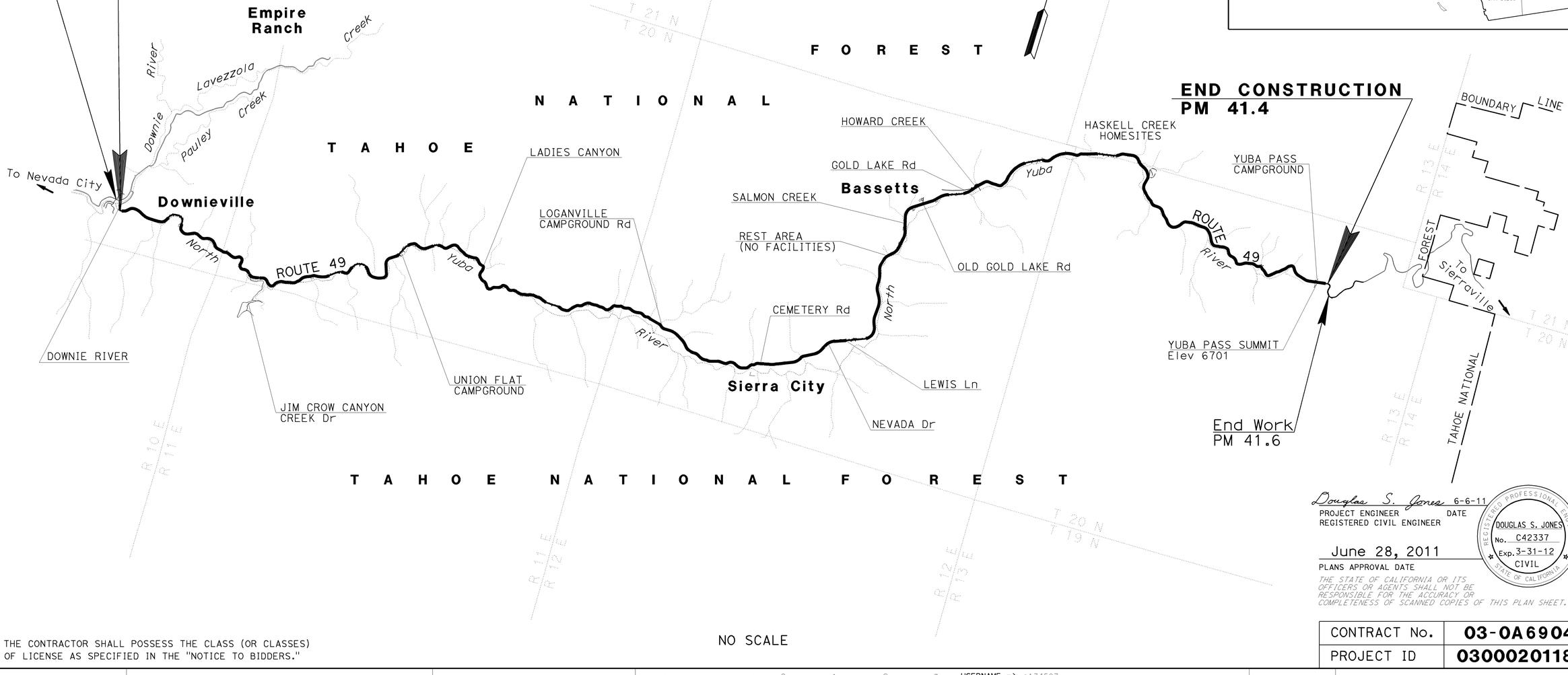

NO SCALE

THE CONTRACTOR SHALL POSSESS THE CLASS (OR CLASSES) OF LICENSE AS SPECIFIED IN THE "NOTICE TO BIDDERS."

Douglas S. Jones 6-6-11
PROJECT ENGINEER DATE
REGISTERED CIVIL ENGINEER

June 28, 2011
PLANS APPROVAL DATE

REGISTERED PROFESSIONAL ENGINEER
DOUGLAS S. JONES
No. C42337
Exp. 3-31-12
CIVIL
STATE OF CALIFORNIA

THE STATE OF CALIFORNIA OR ITS OFFICERS OR AGENTS SHALL NOT BE RESPONSIBLE FOR THE ACCURACY OR COMPLETENESS OF SCANNED COPIES OF THIS PLAN SHEET.

CONTRACT No.	03-0A6904
PROJECT ID	03000201181

PROJECT MANAGER: SUKWINDER BAJWA
DESIGN ENGINEER: DOUGLAS S. JONES

LAST REVISION 02-14-11
DATE PLOTTED => 10-AUG-2011
TIME PLOTTED => 05:05

BORDER LAST REVISED 7/2/2010 | CALTRANS WEB SITE IS: HTTP//WWW.DOT.CA.GOV/ | RELATIVE BORDER SCALE IS IN INCHES 0 1 2 3 | USERNAME => s134507 DGN FILE => 0300020118ab001.dgn | UNIT 0307 | PROJECT NUMBER & PHASE 03000201181

Dist	COUNTY	ROUTE	POST MILES TOTAL PROJECT	SHEET No.	TOTAL SHEETS
03	Sie	49	16.9/41.4	2	31

Douglas S. Jones 6-6-11
REGISTERED CIVIL ENGINEER DATE

6-28-11
PLANS APPROVAL DATE

REGISTERED PROFESSIONAL ENGINEER
DOUGLAS S. JONES
No. C42337
Exp. 03-31-12
CIVIL
STATE OF CALIFORNIA

THE STATE OF CALIFORNIA OR ITS OFFICERS OR AGENTS SHALL NOT BE RESPONSIBLE FOR THE ACCURACY OR COMPLETENESS OF SCANNED COPIES OF THIS PLAN SHEET.

NOTES:

1. DIMENSIONS OF THE STRUCTURAL SECTIONS ARE SUBJECT TO TOLERANCES SPECIFIED IN THE STANDARD SPECIFICATIONS.
2. MATCH EXISTING SUPERELEVATION OR AS DIRECTED BY THE ENGINEER.
3. SEE R/W RECORD MAPS AT DISTRICT OFFICE FOR COMPLETE R/W DATA.
4. EXISTING UTILITY FACILITIES HAVE NOT BEEN PLOTTED ON THESE PLANS.

ABBREVIATIONS:

CFIPR COLD FOAM IN-PLACE RECYCLING
EG EDGE OF GRAVEL

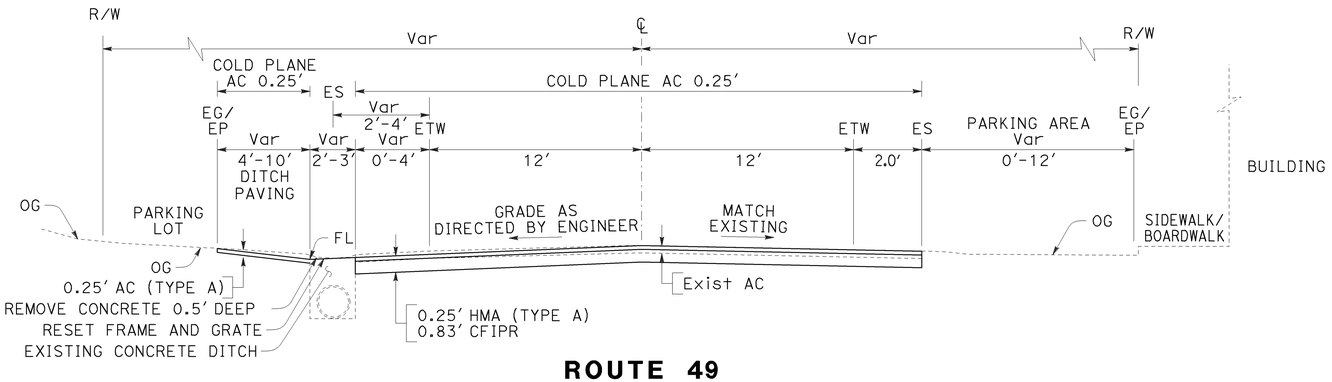

ROUTE 49

PM 29.17 TO 29.22
CEMETERY Rd TO ASTAGNA ALLEY

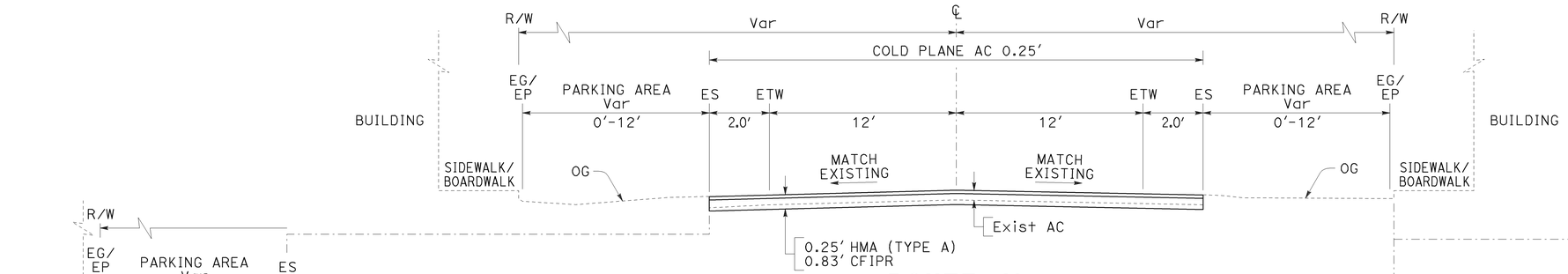

ROUTE 49

PM 29.15 TO 29.17, PM 29.22 TO 29.35

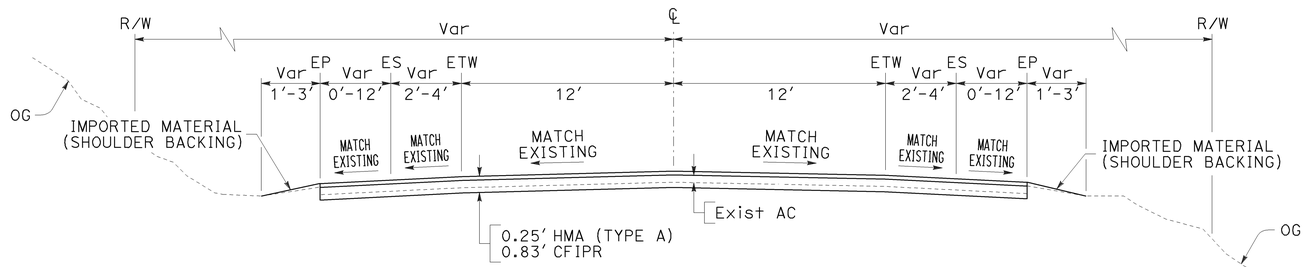

ROUTE 49

PM 16.90 TO 29.15, PM 29.35 TO 41.4

TYPICAL CROSS SECTIONS

NO SCALE

X-1

REVISED BY	DATE REVISED
SCOTT FOSTER	

CALCULATED-
DESIGNED BY
CHECKED BY

FUNCTIONAL SUPERVISOR
DOUGLAS S. JONES

STATE OF CALIFORNIA - DEPARTMENT OF TRANSPORTATION
DIVISION OF ENGINEERING

LAST REVISION | DATE PLOTTED => 10-AUG-2011
11-23-10 | TIME PLOTTED => 10:05

BORDER LAST REVISED 7/2/2010

USERNAME => s134507
DGN FILE => 03000201181ca001.dgn

RELATIVE BORDER SCALE IS IN INCHES 0 1 2 3

UNIT 0307

PROJECT NUMBER & PHASE 03000201181

Dist	COUNTY	ROUTE	POST MILES TOTAL PROJECT	SHEET No.	TOTAL SHEETS
03	Sie	49	16.9/41.4	3	31

Douglas S. Jones 6-6-11
REGISTERED CIVIL ENGINEER DATE

6-28-11
PLANS APPROVAL DATE

REGISTERED PROFESSIONAL ENGINEER
DOUGLAS S. JONES
No. C42337
Exp. 03-31-12
CIVIL
STATE OF CALIFORNIA

THE STATE OF CALIFORNIA OR ITS OFFICERS OR AGENTS SHALL NOT BE RESPONSIBLE FOR THE ACCURACY OR COMPLETENESS OF SCANNED COPIES OF THIS PLAN SHEET.

NOTES:

1. DIMENSIONS OF THE STRUCTURAL SECTIONS ARE SUBJECT TO TOLERANCES SPECIFIED IN THE STANDARD SPECIFICATIONS.
2. MATCH EXISTING SUPERELEVATION OR AS DIRECTED BY THE ENGINEER.
3. SEE R/W RECORD MAPS AT DISTRICT OFFICE FOR COMPLETE R/W DATA.
4. EXISTING UTILITY FACILITIES HAVE NOT BEEN PLOTTED ON THESE PLANS.

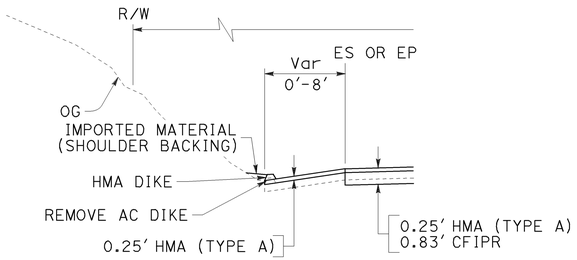

PAVED DITCH

PM 29.94 TO 30.00,
PM 31.67 TO 31.73,
PM 32.18 TO 32.19,
PM 32.20 TO 32.21,

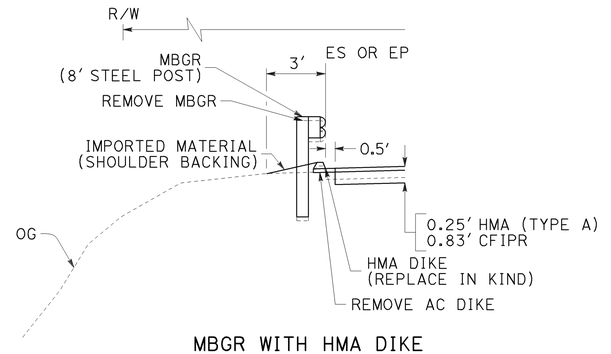

MBGR WITH HMA DIKE

SEE PLACE HOT MIX ASPHALT DIKE IN SUMMARY OF QUANTITIES FOR LOCATIONS

SEE METAL BEAM GUARD RAIL IN SUMMARY OF QUANTITIES LIST FOR LOCATIONS

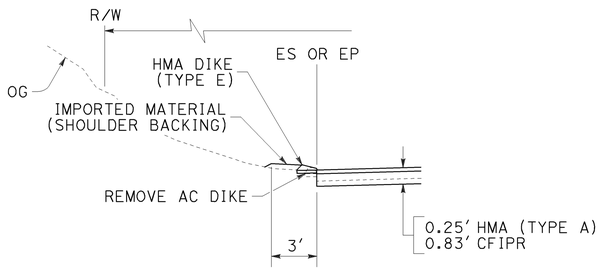

HMA MOUNTABLE DIKE

SEE PLACE HOT MIX ASPHALT DIKE IN SUMMARY OF QUANTITIES FOR LOCATIONS

TYPICAL CROSS SECTIONS

NO SCALE

X-2

REVISED BY | DATE REVISED
SCOTT FOSTER
CALCULATED-DESIGNED BY | CHECKED BY
FUNCTIONAL SUPERVISOR: DOUGLAS S. JONES
STATE OF CALIFORNIA - DEPARTMENT OF TRANSPORTATION
DIVISION OF ENGINEERING

LAST REVISION | DATE PLOTTED => 10-AUG-2011
11-23-10 | TIME PLOTTED => 10:05

BORDER LAST REVISED 7/2/2010
USERNAME => s134507
DGN FILE => 0300020118ca002.dgn
RELATIVE BORDER SCALE IS IN INCHES 0 1 2 3
UNIT 0307
PROJECT NUMBER & PHASE 03000201181

Dist	COUNTY	ROUTE	POST MILES TOTAL PROJECT	SHEET No.	TOTAL SHEETS
03	Sie	49	16.9/41.4	4	31

Douglas S. Jones 6-6-11
REGISTERED CIVIL ENGINEER DATE

6-28-11
PLANS APPROVAL DATE

REGISTERED PROFESSIONAL ENGINEER
DOUGLAS S. JONES
No. C42337
Exp. 03-31-12
CIVIL
STATE OF CALIFORNIA

THE STATE OF CALIFORNIA OR ITS OFFICERS OR AGENTS SHALL NOT BE RESPONSIBLE FOR THE ACCURACY OR COMPLETENESS OF SCANNED COPIES OF THIS PLAN SHEET.

NOTES:

1. DIMENSIONS OF THE STRUCTURAL SECTIONS ARE SUBJECT TO TOLERANCES SPECIFIED IN THE STANDARD SPECIFICATIONS.
2. MATCH EXISTING SUPERELEVATION OR AS DIRECTED BY THE ENGINEER.
3. SEE R/W RECORD MAPS AT DISTRICT OFFICE FOR COMPLETE R/W DATA.
4. EXISTING UTILITY FACILITIES HAVE NOT BEEN PLOTTED ON THESE PLANS.

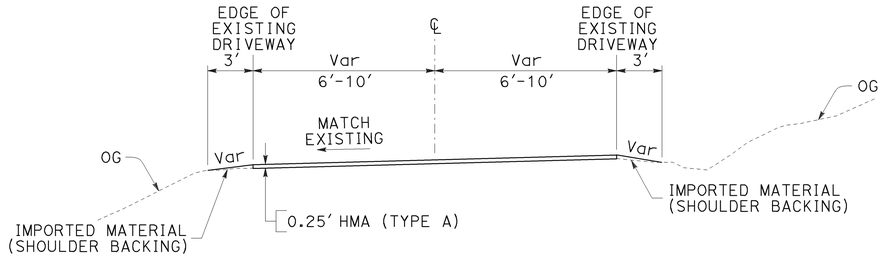

DRIVEWAYS/STREETS/COUNTY ROADS

(EXISTING UNPAVED)

PM 17.50, PM 19.99, PM 21.31, PM 21.75, PM 21.78, PM 21.83, PM 22.40, PM 22.64, PM 23.38, PM 23.44, PM 24.45, PM 23.49, PM 23.89, PM 24.11, PM 25.18, PM 25.29, PM 25.38, PM 25.40, PM 25.55, PM 25.59, PM 26.41, PM 26.76, PM 27.26, PM 27.34, PM 27.35, PM 27.47, PM 27.87, PM 28.93, PM 29.02, PM 32.16, PM 32.18 , PM32.66, PM 33.16, PM 33.47, PM 33.57, PM 24.43, PM 34.50, PM 34.85, PM 35.43, PM 35.48, PM 35.88, PM 35.93, PM 36.02, PM 36.30, PM 36.68, PM 36.83, PM 36.87, PM 37.72, PM 38.87, PM 40.16, PM 40.55, PM 40.57, PM 40.59, PM

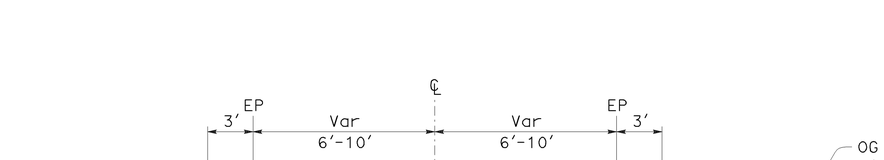

DRIVEWAYS/STREETS/COUNTY ROADS

(EXISTING PAVED)

PM 17.09, PM 17.68, PM 19.60, PM 19.77, PM 22.58, PM 22.61, PM 25.23, PM 27.72, PM 28.76, PM 28.79, PM 28.81, PM 28.82, PM 28.83, PM 28.86, PM 28.88, PM 28.89, PM 28.92, PM 29.17, PM 29.22, PM 29.34, PM 29.27, PM 29.35, PM 29.53, PM 29.62, PM 29.66, PM 29.79, PM 30.22, PM 30.29, PM 30.58, PM 30.74, PM 32.24, PM 32.33, PM 32.39, PM 32.41, PM 32.58, PM 32.82, PM 33.19, PM 33.38, PM 34.19, PM 34.29, PM 35.17, PM 35.26, PM 36.54, PM 36.68, PM 37.38, PM

TYPICAL CROSS SECTIONS

NO SCALE

X-3

REVISED BY | DATE REVISED

SCOTT FOSTER

CALCULATED-DESIGNED BY | CHECKED BY

FUNCTIONAL SUPERVISOR

DOUGLAS S. JONES

STATE OF CALIFORNIA - DEPARTMENT OF TRANSPORTATION

DIVISION OF ENGINEERING

LAST REVISION 11-23-10 | DATE PLOTTED => 10-AUG-2011 | TIME PLOTTED => 10:05

BORDER LAST REVISED 7/2/2010

USERNAME => s134507
DGN FILE => 0300020118ca003.dgn

RELATIVE BORDER SCALE IS IN INCHES 0 1 2 3

UNIT 0307

PROJECT NUMBER & PHASE 03000201181

Dist	COUNTY	ROUTE	POST MILES TOTAL PROJECT	SHEET No.	TOTAL SHEETS
03	Sie	49	16.9/41.4	5	31

Douglas S. Jones 6-6-11
REGISTERED CIVIL ENGINEER DATE

6-28-11
PLANS APPROVAL DATE

REGISTERED PROFESSIONAL ENGINEER
DOUGLAS S. JONES
No. C42337
Exp. 03-31-12
CIVIL
STATE OF CALIFORNIA

THE STATE OF CALIFORNIA OR ITS OFFICERS OR AGENTS SHALL NOT BE RESPONSIBLE FOR THE ACCURACY OR COMPLETENESS OF SCANNED COPIES OF THIS PLAN SHEET.

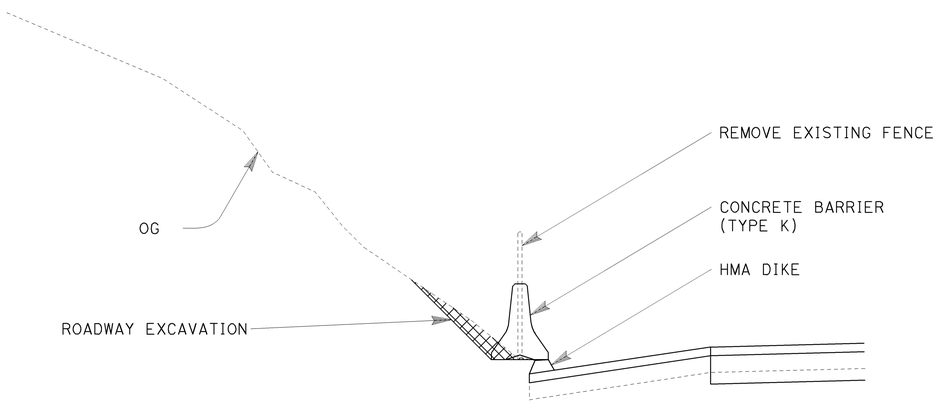

CONCRETE BARRIER (TYPE K)
(WITH HMA DIKE)

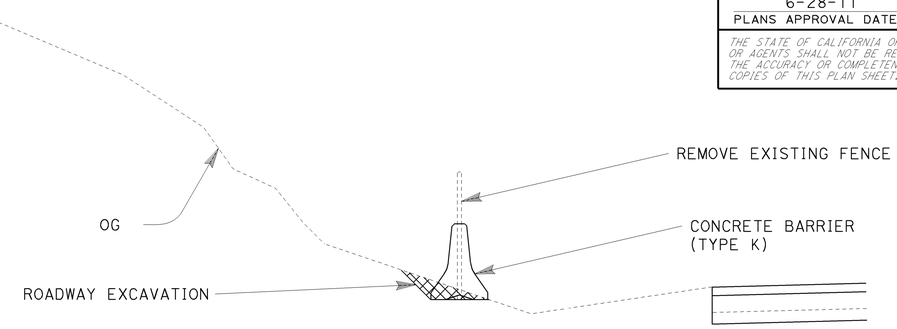

CONCRETE BARRIER (TYPE K)

ROADWAY EXCAVATION

FOR DETAILS NOT SHOWN
SEE STANDARD PLAN T3

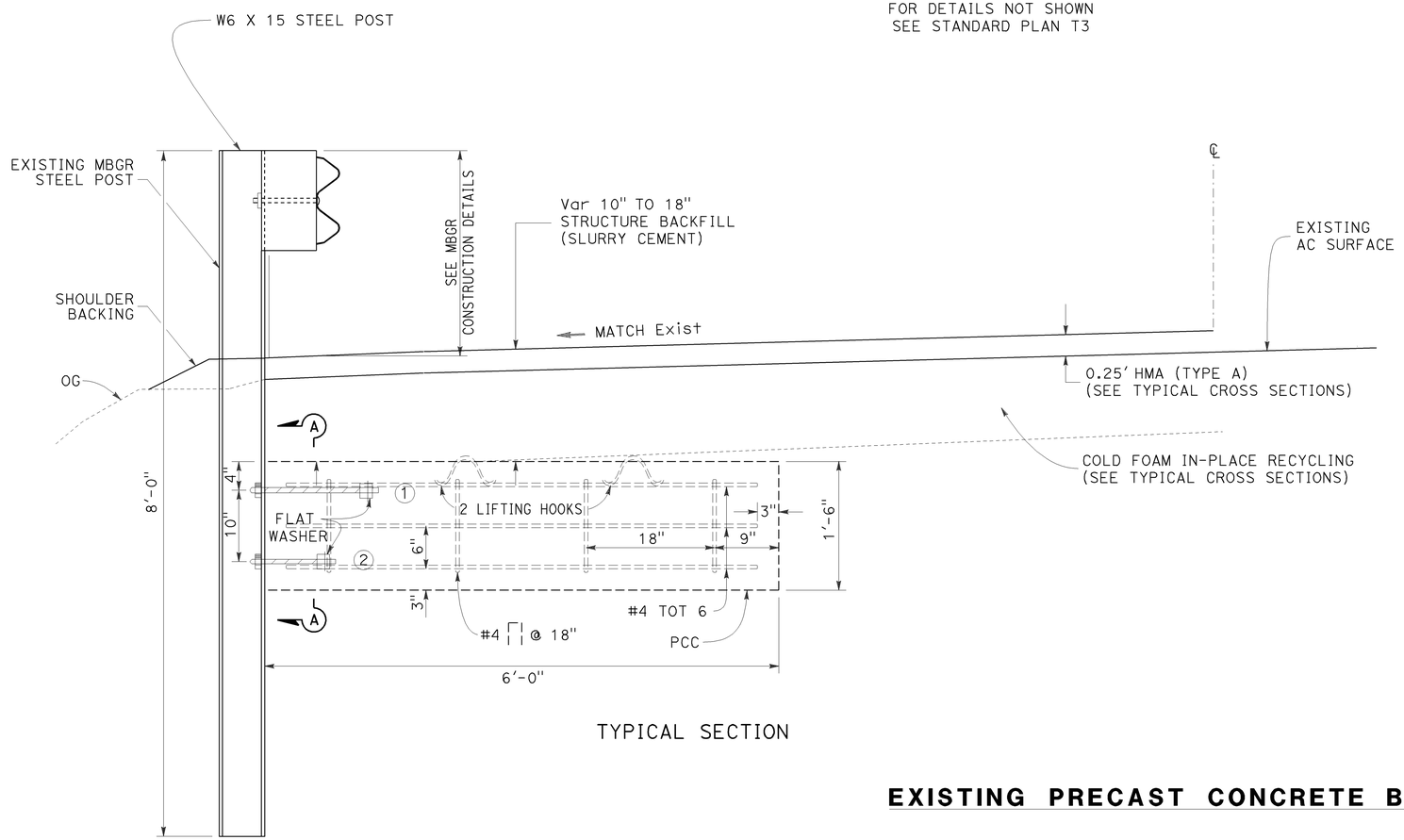

TYPICAL SECTION

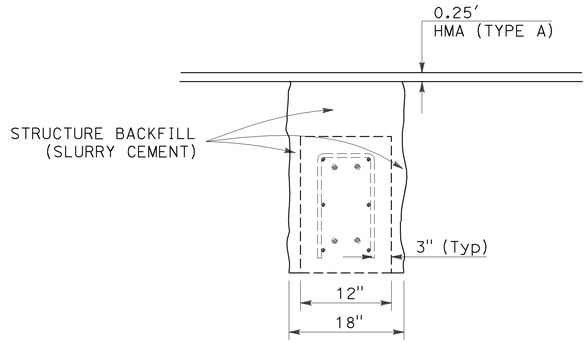

SECTION A-A

EXISTING PRECAST CONCRETE BEAM

CONSTRUCTION DETAILS

NO SCALE

C-1

STATE OF CALIFORNIA - DEPARTMENT OF TRANSPORTATION
Caltrans DIVISION OF ENGINEERING

FUNCTIONAL SUPERVISOR: DOUGLAS S. JONES
CALCULATED-DESIGNED BY: KAO THAO
CHECKED BY:
REVISED BY:
DATE REVISED:

LAST REVISION
DATE PLOTTED => 10-AUG-2011
TIME PLOTTED => 10:05

Dist	COUNTY	ROUTE	POST MILES TOTAL PROJECT	SHEET No.	TOTAL SHEETS
03	Sie	49	16.9/41.4	6	31

Douglas S. Jones 6-6-11
REGISTERED CIVIL ENGINEER DATE

6-28-11
PLANS APPROVAL DATE

REGISTERED PROFESSIONAL ENGINEER
DOUGLAS S. JONES
No. C42337
Exp. 03-31-12
CIVIL
STATE OF CALIFORNIA

THE STATE OF CALIFORNIA OR ITS OFFICERS OR AGENTS SHALL NOT BE RESPONSIBLE FOR THE ACCURACY OR COMPLETENESS OF SCANNED COPIES OF THIS PLAN SHEET.

NOTES:

1. DIMENSIONS OF THE STRUCTURAL SECTIONS ARE SUBJECT TO TOLERANCES SPECIFIED IN THE STANDARD SPECIFICATIONS.
2. MATCH EXISTING SUPERELEVATION OR AS DIRECTED BY THE ENGINEER.
3. SEE R/W RECORD MAPS AT DISTRICT OFFICE FOR COMPLETE R/W DATA.
4. EXISTING UTILITY FACILITIES HAVE NOT BEEN PLOTTED ON THESE PLANS.

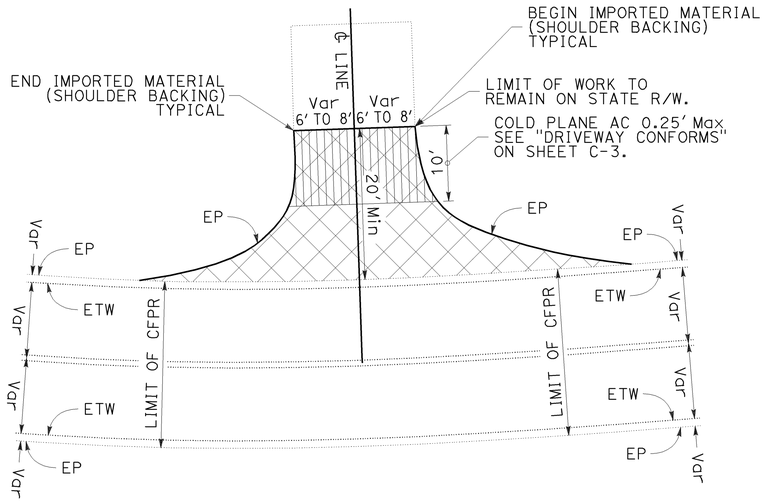

TYPICAL DRIVEWAY INTERSECTION

(EXISTING PAVED)

MAINLINE CFIPR NOT SHOWN FOR CLARITY

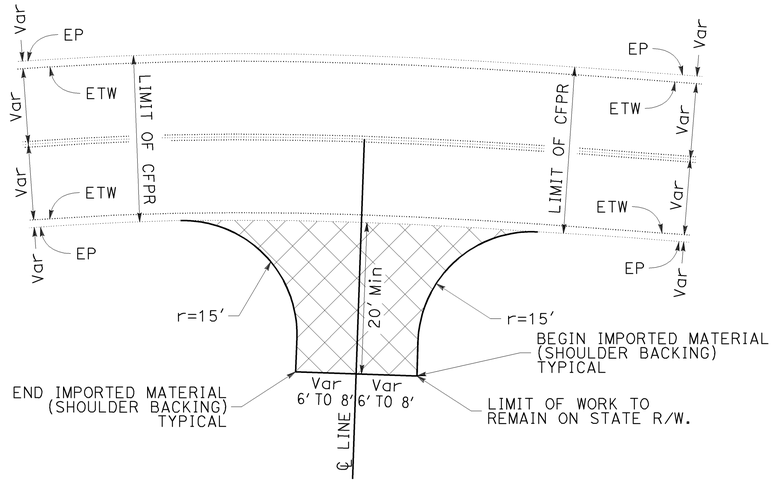

TYPICAL DRIVEWAY INTERSECTION

(EXISTING UNPAVED)

MAINLINE CFIPR NOT SHOWN FOR CLARITY

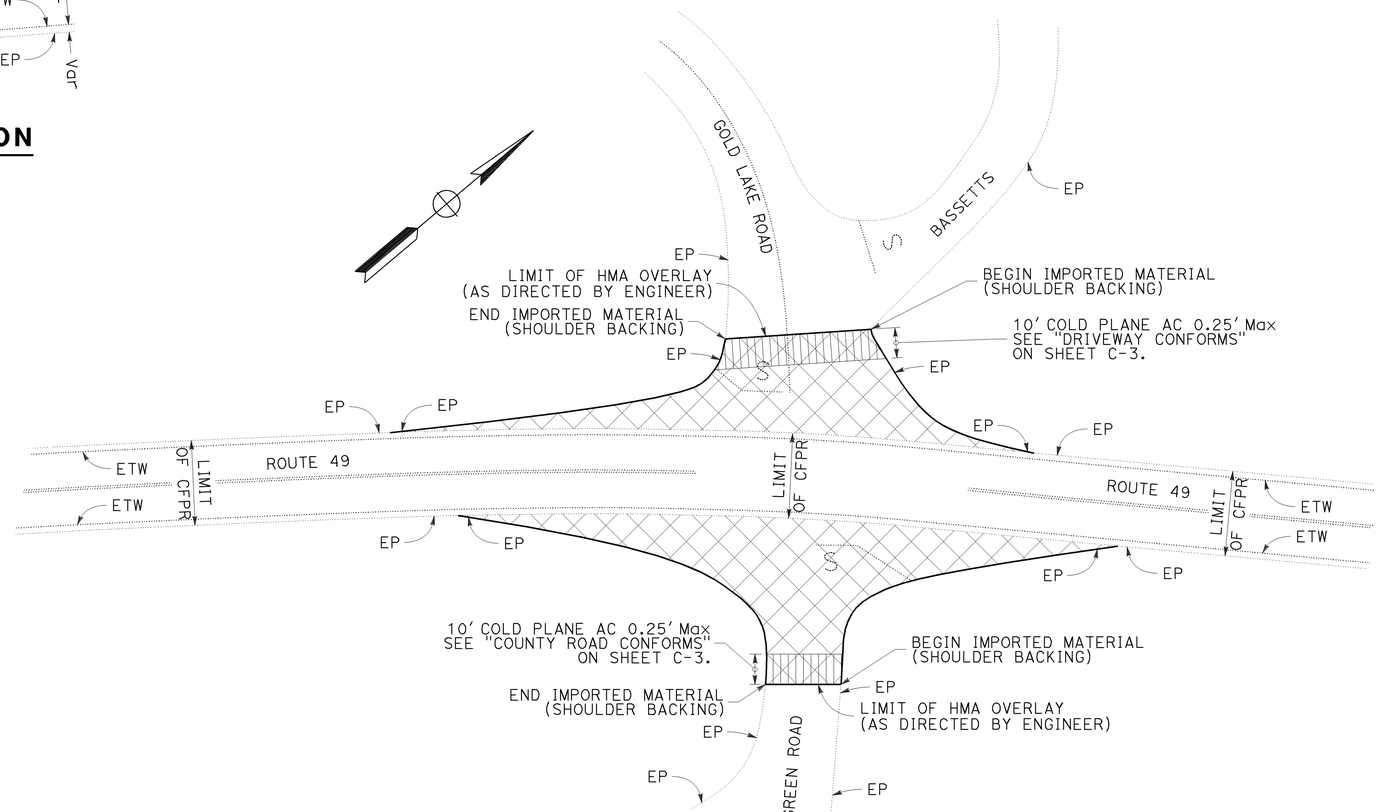

TYPICAL COUNTY ROAD INTERSECTION CONSTRUCTION DETAILS

MAINLINE CFIPR NOT SHOWN FOR CLARITY

NO SCALE

C-2

ABBREVIATION:

CFIPR COLD FOAM IN-PLACE RECYCLING

LEGEND:

COLD PLANE AC 0.25' Max AND 0.25' HMA (TYPE A)

0.25' HMA (TYPE A)

REVISED BY | DATE REVISED

SCOTT FOSTER

CALCULATED-DESIGNED BY | CHECKED BY

FUNCTIONAL SUPERVISOR

DOUGLAS S. JONES

STATE OF CALIFORNIA - DEPARTMENT OF TRANSPORTATION

DIVISION OF ENGINEERING

LAST REVISION | DATE PLOTTED => 10-AUG-2011
11-23-10 | TIME PLOTTED => 10:05

Dist	COUNTY	ROUTE	POST MILES TOTAL PROJECT	SHEET No.	TOTAL SHEETS
03	Sie	49	16.9/41.4	7	31

Douglas S. Jones 6-6-11
REGISTERED CIVIL ENGINEER DATE

6-28-11
PLANS APPROVAL DATE

REGISTERED PROFESSIONAL ENGINEER
DOUGLAS S. JONES
No. C42337
Exp. 03-31-12
CIVIL
STATE OF CALIFORNIA

THE STATE OF CALIFORNIA OR ITS OFFICERS OR AGENTS SHALL NOT BE RESPONSIBLE FOR THE ACCURACY OR COMPLETENESS OF SCANNED COPIES OF THIS PLAN SHEET.

LEGEND:

- COLD PLANE AC PAVEMENT (0.25′ Max)
- 0.83′ CFPR

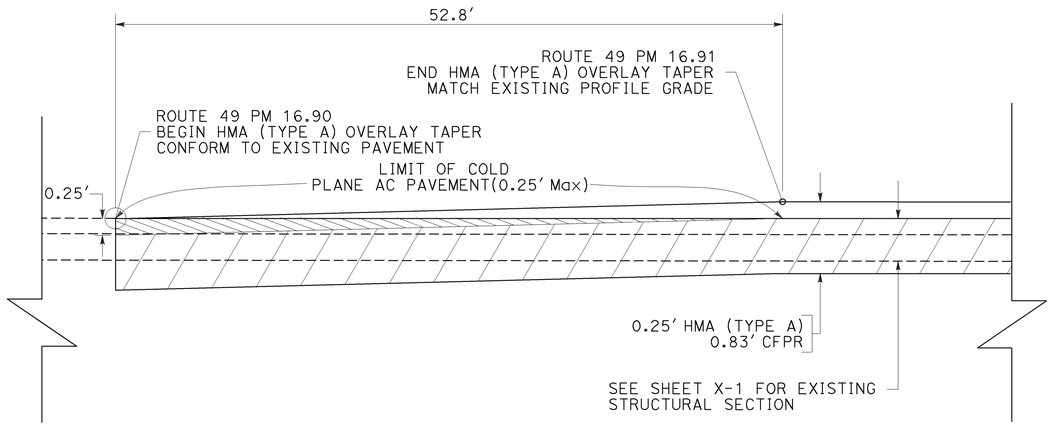

AC OVERLAY TAPER

ROUTE 49

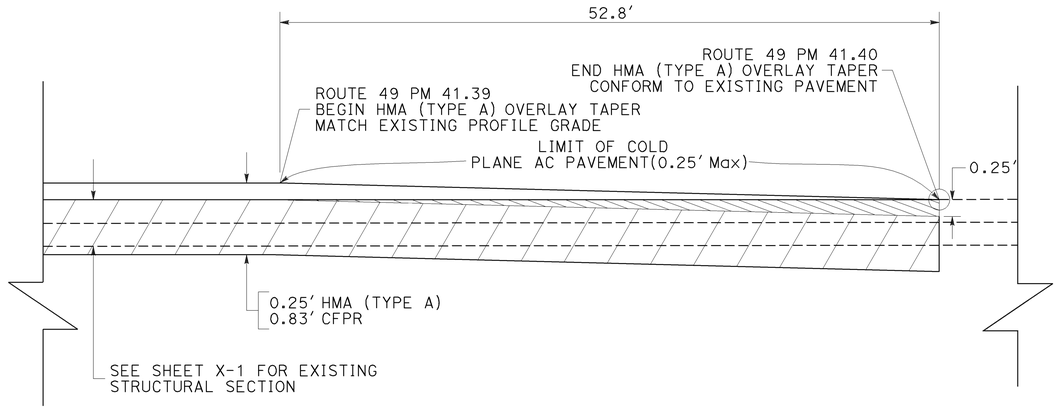

AC OVERLAY TAPER

ROUTE 49

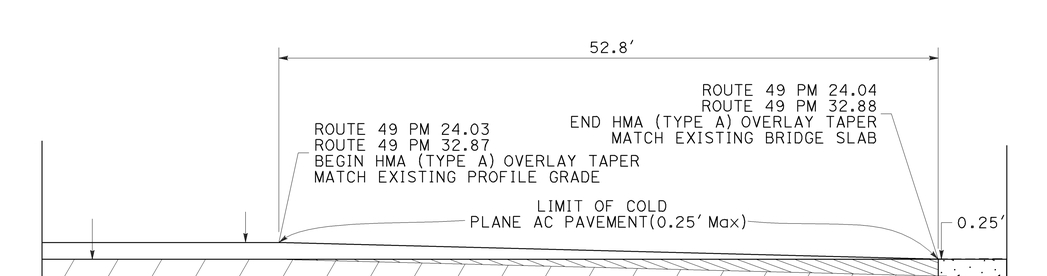

AC OVERLAY TAPER

ROUTE 49 AT EXISTING LADIES CANYON CREEK BRIDGE
ROUTE 49 AT EXISTING SALMON CREEK BRIDGE

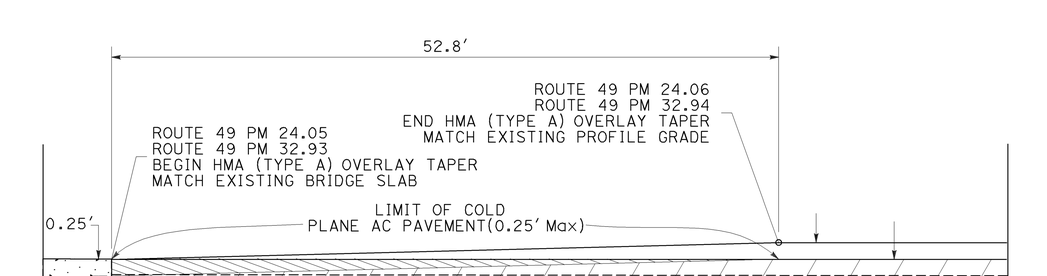

AC OVERLAY TAPER

ROUTE 49 AT EXISTING LADIES CANYON CREEK BRIDGE
ROUTE 49 AT EXISTING SALMON CREEK BRIDGE

CONSTRUCTION DETAILS

NO SCALE

C-3

STATE OF CALIFORNIA - DEPARTMENT OF TRANSPORTATION
DIVISION OF ENGINEERING
FUNCTIONAL SUPERVISOR: DOUGLAS S. JONES
CALCULATED-DESIGNED BY
CHECKED BY
REVISED BY
DATE REVISED
SCOTT FOSTER

LAST REVISION 11-23-10
DATE PLOTTED => 10-AUG-2011
TIME PLOTTED => 10:05

BORDER LAST REVISED 7/2/2010
USERNAME => s134507
DGN FILE => 03000201180a003.dgn
RELATIVE BORDER SCALE IS IN INCHES 0 1 2 3
UNIT 0307
PROJECT NUMBER & PHASE 03000201181

Dist	COUNTY	ROUTE	POST MILES TOTAL PROJECT	SHEET No.	TOTAL SHEETS
03	Sie	49	16.9/41.4	8	31

Douglas S. Jones 6-6-11
REGISTERED CIVIL ENGINEER DATE

6-28-11
PLANS APPROVAL DATE

REGISTERED PROFESSIONAL ENGINEER
DOUGLAS S. JONES
No. C42337
Exp. 03-31-12
CIVIL
STATE OF CALIFORNIA

THE STATE OF CALIFORNIA OR ITS OFFICERS OR AGENTS SHALL NOT BE RESPONSIBLE FOR THE ACCURACY OR COMPLETENESS OF SCANNED COPIES OF THIS PLAN SHEET.

LEGEND:

COLD PLANE 0.25' AC GRIND (Max)

0.83' CFPR

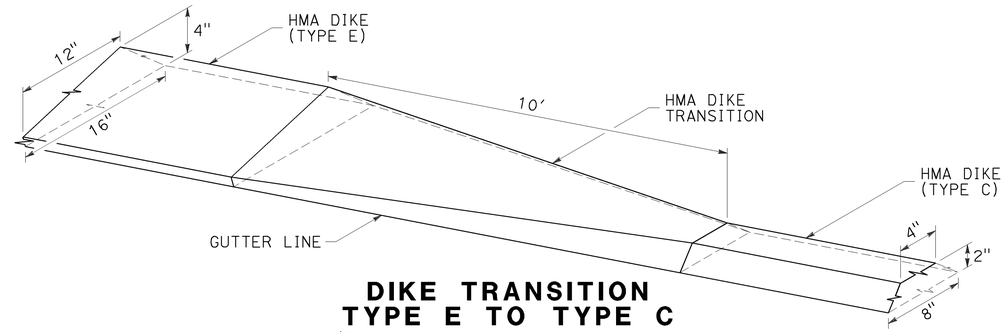

DIKE TRANSITION TYPE E TO TYPE C

(FOR LOCATION SEE QUANTITY SHEETS. FOR DETAILS NOT SHOWN, SEE STANDARD PLAN A87B)

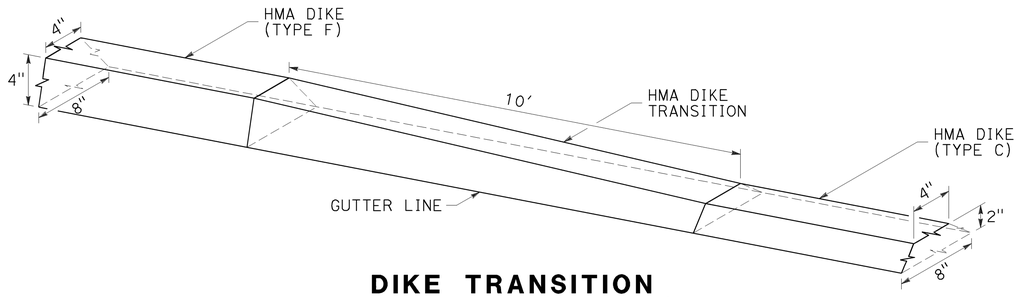

DIKE TRANSITION TYPE F TO TYPE C

(FOR LOCATION SEE QUANTITY SHEETS. FOR DETAILS NOT SHOWN, SEE STANDARD PLAN A87B)

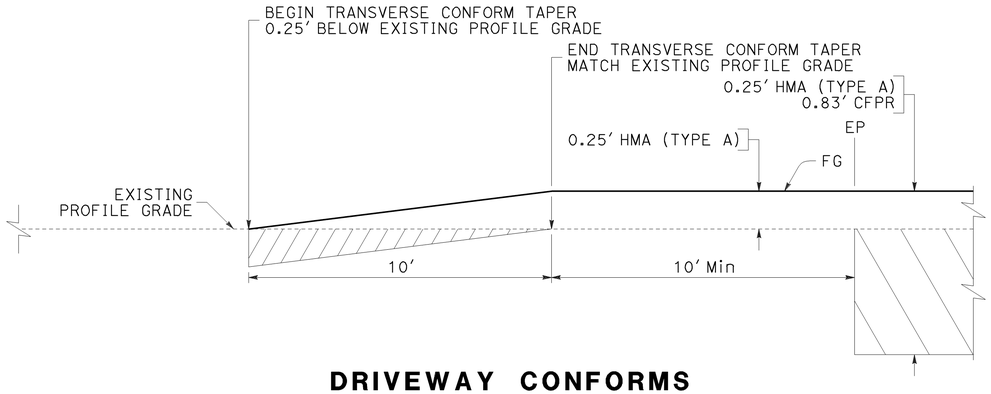

DRIVEWAY CONFORMS
STREET CONFORMS
COUNTY ROAD CONFORMS

Var PM SEE SHEET X-3 FOR DETAILS NOT SHOWN)

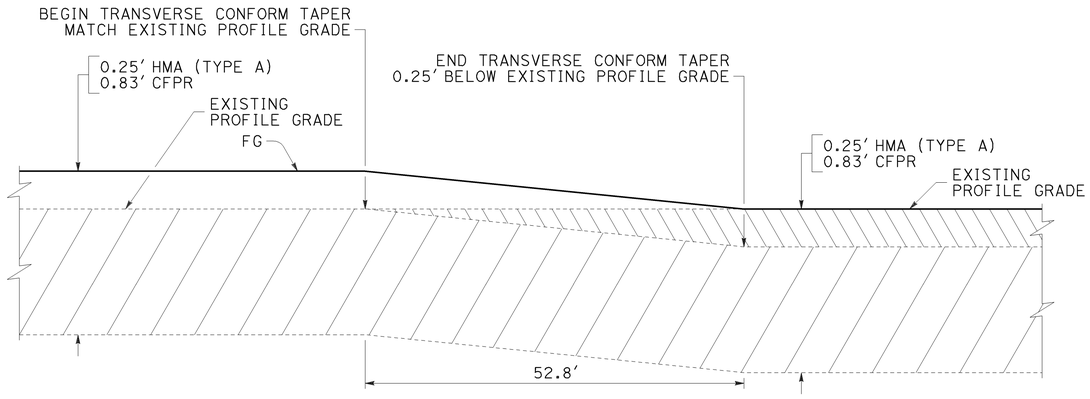

TRANSVERSE CONFORMS

ROCK WALLS NEAR DOWNIEVILLE MAINTENANCE STATION (PM 19.80 TO 19.81)
NEAR SIERRA CITY (PM 29.14 TO 29.15)

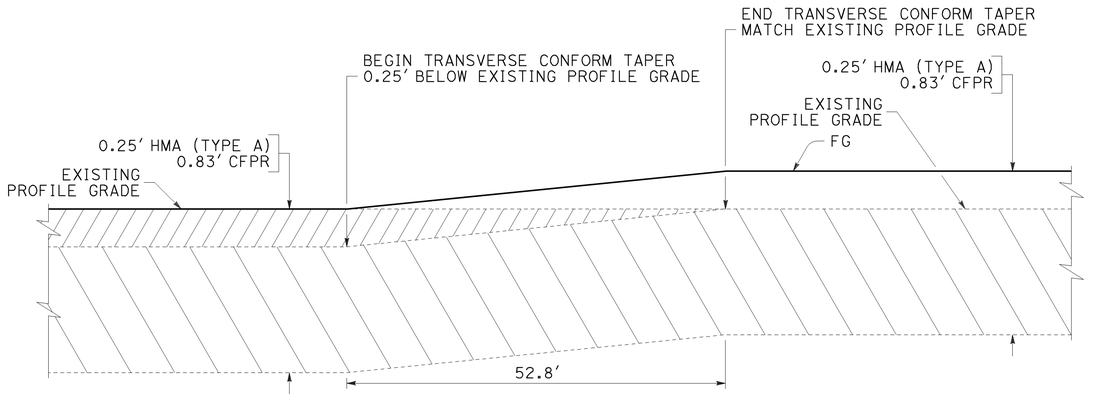

TRANSVERSE CONFORMS

ROCK WALLS NEAR DOWNIEVILLE MAINTENANCE STATION (PM 19.98 TO 19.99)
NEAR SIERRA CITY (PM 29.34 TO 29.35)

CONSTRUCTION DETAILS

NO SCALE

C-4

STATE OF CALIFORNIA - DEPARTMENT OF TRANSPORTATION
DIVISION OF ENGINEERING
FUNCTIONAL SUPERVISOR: DOUGLAS S. JONES
CALCULATED-DESIGNED BY: SCOTT FOSTER
CHECKED BY
REVISED BY
DATE REVISED

LAST REVISION DATE PLOTTED => 10-AUG-2011
TIME PLOTTED => 10:05

BORDER LAST REVISED 7/2/2010
USERNAME => s134507
DGN FILE => 0300020118ga004.dgn
RELATIVE BORDER SCALE IS IN INCHES 0 1 2 3
UNIT 0307
PROJECT NUMBER & PHASE 03000201181

Dist	COUNTY	ROUTE	POST MILES TOTAL PROJECT	SHEET No.	TOTAL SHEETS
03	Sie	49	16.9/41.4	9	31

Douglas S. Jones 6-6-11
REGISTERED CIVIL ENGINEER DATE

6-28-11
PLANS APPROVAL DATE

REGISTERED PROFESSIONAL ENGINEER — DOUGLAS S. JONES — No. C42337 — Exp. 03-31-12 — CIVIL — STATE OF CALIFORNIA

THE STATE OF CALIFORNIA OR ITS OFFICERS OR AGENTS SHALL NOT BE RESPONSIBLE FOR THE ACCURACY OR COMPLETENESS OF SCANNED COPIES OF THIS PLAN SHEET.

NOTES:

1. REFER TO A77 SERIES OF STANDARD PLANS FOR ADDITIONAL DETAILS NOT SHOWN.
2. IF A COMBINATION OF WOOD BLOCKS TO ACHIEVE THE ACTUAL 12" OFFSET IS USED. WOOD BLOCKS SHALL BE TOE-NAILED TOGETHER WITH 16D GALVANIZED NAILS TO PREVENT BLOCK ROTATION.
3. ATTACH WOOD BLOCKS USING BOLT HOLES ON APPROACHING TRAFFIC SIDE OF STEEL POST WEB.

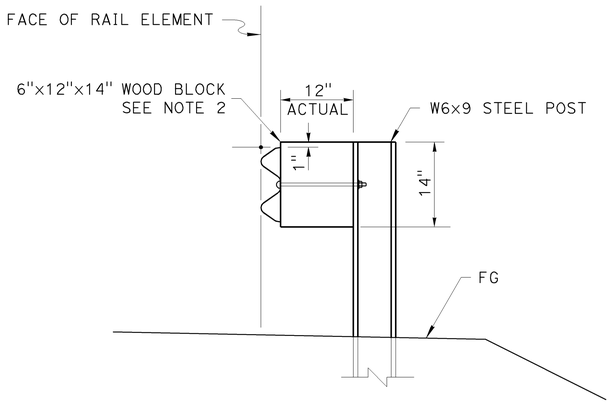

TYPICAL SECTION WITHOUT CURB

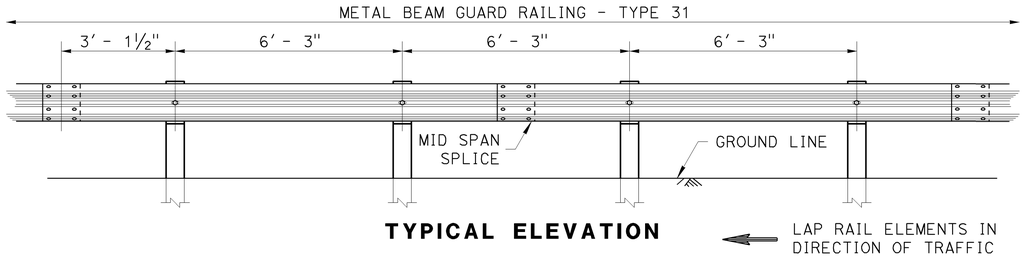

TYPICAL ELEVATION

LAP RAIL ELEMENTS IN DIRECTION OF TRAFFIC

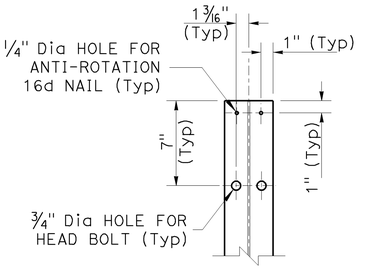

W6 x 9 STEEL POST
(SEE NOTE 3)

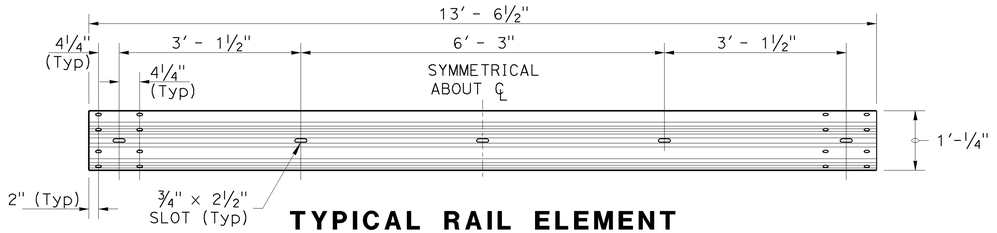

TYPICAL RAIL ELEMENT

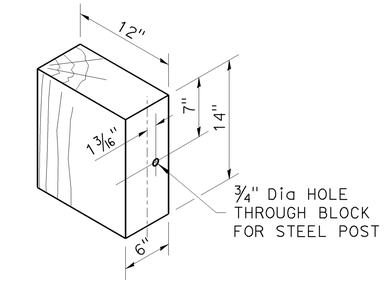

WOOD BLOCK

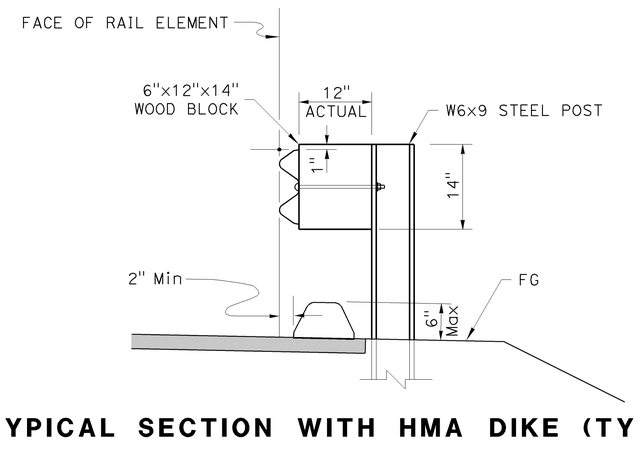

TYPICAL SECTION WITH HMA DIKE (TYPE A)

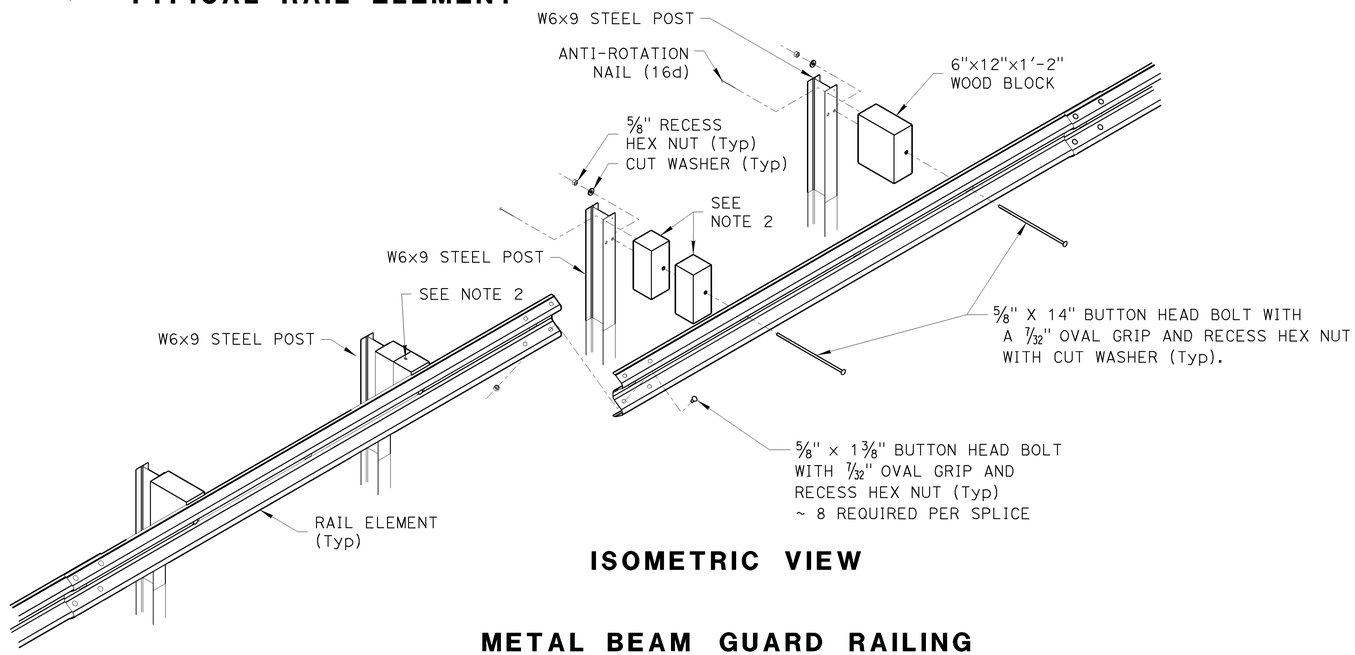

ISOMETRIC VIEW

METAL BEAM GUARD RAILING

CONSTRUCTION DETAILS

NO SCALE

C-5

STATE OF CALIFORNIA - DEPARTMENT OF TRANSPORTATION
Caltrans® DIVISION OF ENGINEERING
FUNCTIONAL SUPERVISOR: DOUGLAS S. JONES
CALCULATED-DESIGNED BY
CHECKED BY
SCOTT FOSTER
REVISED BY
DATE REVISED

LAST REVISION DATE PLOTTED => 10-AUG-2011
TIME PLOTTED => 10:05

BORDER LAST REVISED 7/2/2010 | USERNAME => s134507 | DGN FILE => 03000201181ga005.dgn | RELATIVE BORDER SCALE IS IN INCHES 0 1 2 3 | UNIT 0307 | PROJECT NUMBER & PHASE 03000201181

Dist	COUNTY	ROUTE	POST MILES TOTAL PROJECT	SHEET No.	TOTAL SHEETS
03	Sie	49	16.9/41.4	10	31

Douglas S. Jones 6-6-11
REGISTERED CIVIL ENGINEER DATE

6-28-11
PLANS APPROVAL DATE

DOUGLAS S. JONES No. C42337 Exp. 03-31-12 CIVIL — REGISTERED PROFESSIONAL ENGINEER — STATE OF CALIFORNIA

THE STATE OF CALIFORNIA OR ITS OFFICERS OR AGENTS SHALL NOT BE RESPONSIBLE FOR THE ACCURACY OR COMPLETENESS OF SCANNED COPIES OF THIS PLAN SHEET.

NOTES:

1. FOR DETAILS OF THE ANCHOR PLATE AND ¾" CABLE, SEE STANDARD PLAN A77H3.
2. A 6'-0" LENGTH STEEL FOUNDATION TUBE, TS 8 X 6 X 3/16, WITHOUT A SOIL PLATE, MAY BE FURNISHED AND INSTALLED IN PLACE OF THE 4'-6" LENGTH STEEL FOUNDATION TUBE AND SOIL PLATE SHOWN. MINIMUM EMBEDMENT OF THE 6'-0" LENGTH TUBE SHALL BE 5'-9". A ⅝" Ø Hex HEAD BOLT AND NUT SHALL BE INSTALLED IN THE HOLE IN THE 6'-0" LENGTH TUBE TO KEEP THE WOOD POST FROM DROPPING INTO THE TUBE.
3. REFER TO A77 SERIES OF STANDARD PLANS FOR ADDITIONAL DETAILS NOT SHOWN.

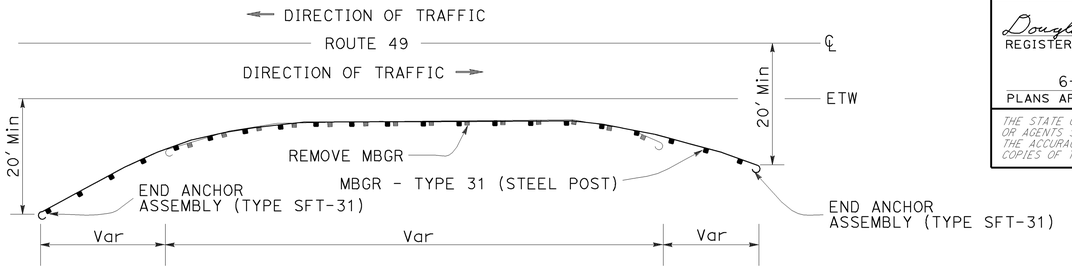

METAL BEAM GUARD RAILING END OFFSET - TYPICAL

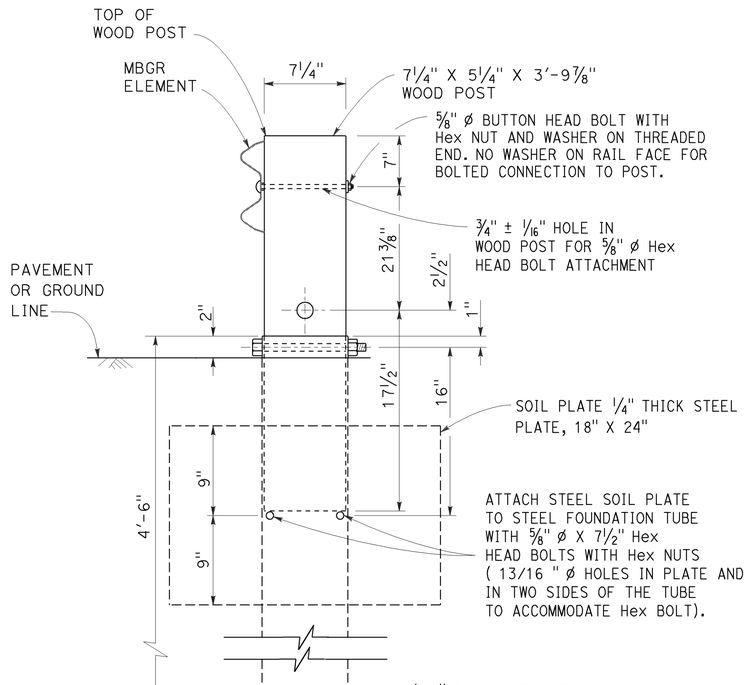

SECTION A-A

DETAIL A

CABLE CONNECTION END PLATE

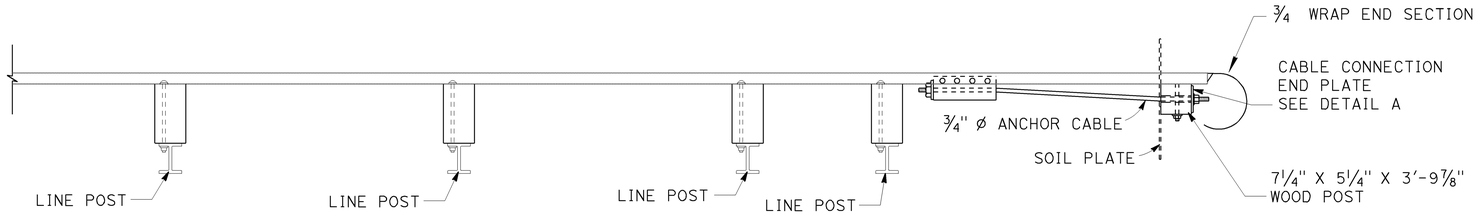

PLAN

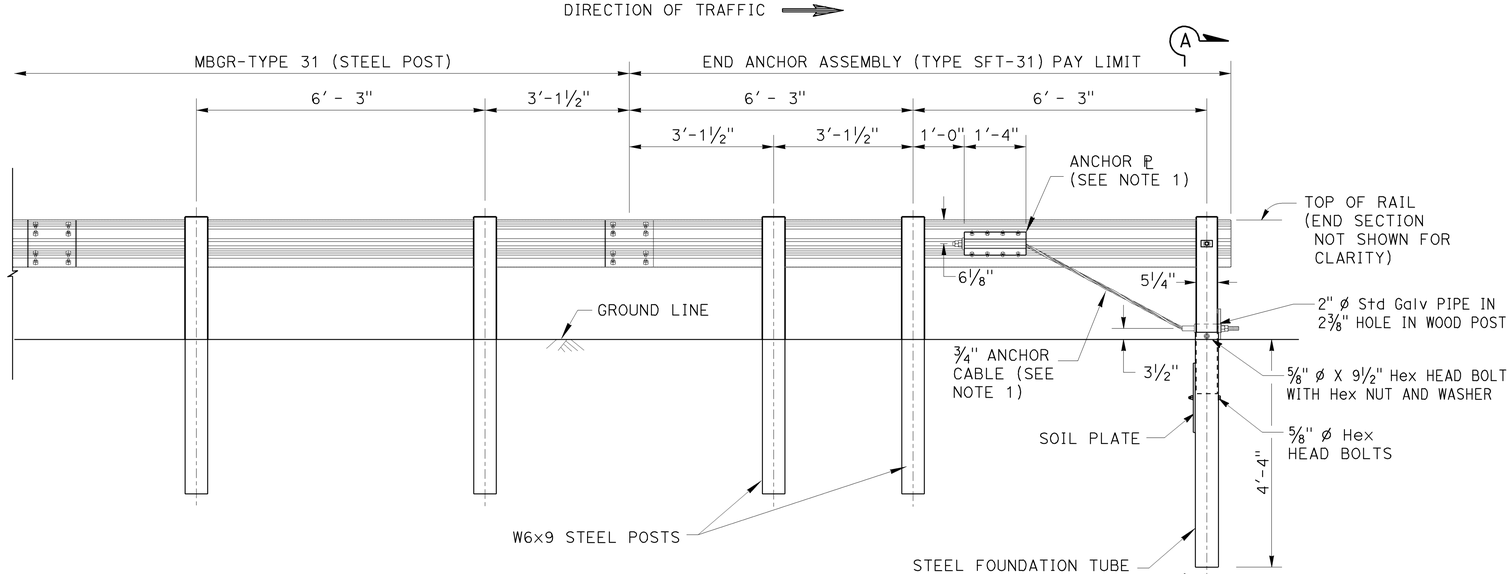

ELEVATION

END ANCHOR ASSEMBLY (TYPE SFT)

CONSTRUCTION DETAILS

NO SCALE

C-6

STATE OF CALIFORNIA - DEPARTMENT OF TRANSPORTATION
DIVISION OF ENGINEERING
FUNCTIONAL SUPERVISOR: DOUGLAS S. JONES
CALCULATED-DESIGNED BY: SCOTT FOSTER
CHECKED BY
REVISED BY
DATE REVISED

LAST REVISION | DATE PLOTTED => 10-AUG-2011
TIME PLOTTED => 10:05
11-23-10

BORDER LAST REVISED 7/2/2010 | USERNAME => s134507 | DGN FILE => 0300020118ga006.dgn | RELATIVE BORDER SCALE IS IN INCHES 0 1 2 3 | UNIT 0307 | PROJECT NUMBER & PHASE 03000201181

Dist	COUNTY	ROUTE	POST MILES TOTAL PROJECT	SHEET No.	TOTAL SHEETS
03	Sie	49	16.9/41.4	11	31

Douglas S. Jones 6-6-11
REGISTERED CIVIL ENGINEER DATE

6-28-11
PLANS APPROVAL DATE

REGISTERED PROFESSIONAL ENGINEER
DOUGLAS S. JONES
No. C42337
Exp. 03-31-12
CIVIL
STATE OF CALIFORNIA

THE STATE OF CALIFORNIA OR ITS OFFICERS OR AGENTS SHALL NOT BE RESPONSIBLE FOR THE ACCURACY OR COMPLETENESS OF SCANNED COPIES OF THIS PLAN SHEET.

NOTES:

1. FOR TYPICAL USE OF THIS TYPE OF END ANCHOR, WITH GUARD RAILING, SEE THE A77E, A77F AND A77G SERIES OF THE STANDARD PLANS.
2. HOLES EXCAVATED IN THE SLOPE TO CONSTRUCT THE BURIED POST END ANCHOR SHALL BE BACKFILLED WITH SELECTED EARTH, PLACED IN LAYERS APPROXIMATELY 1'-0" THICK. EACH LAYER SHALL BE MOISTENED AND THOROUGHLY COMPACTED. THE BURIED POST END ANCHOR SHALL ONLY BE CONSTRUCTED AT THOSE LOCATIONS WHERE
3. THE SLOPE PERPENDICULAR TO THE ROADWAY IS NON-TRAVERSABLE.

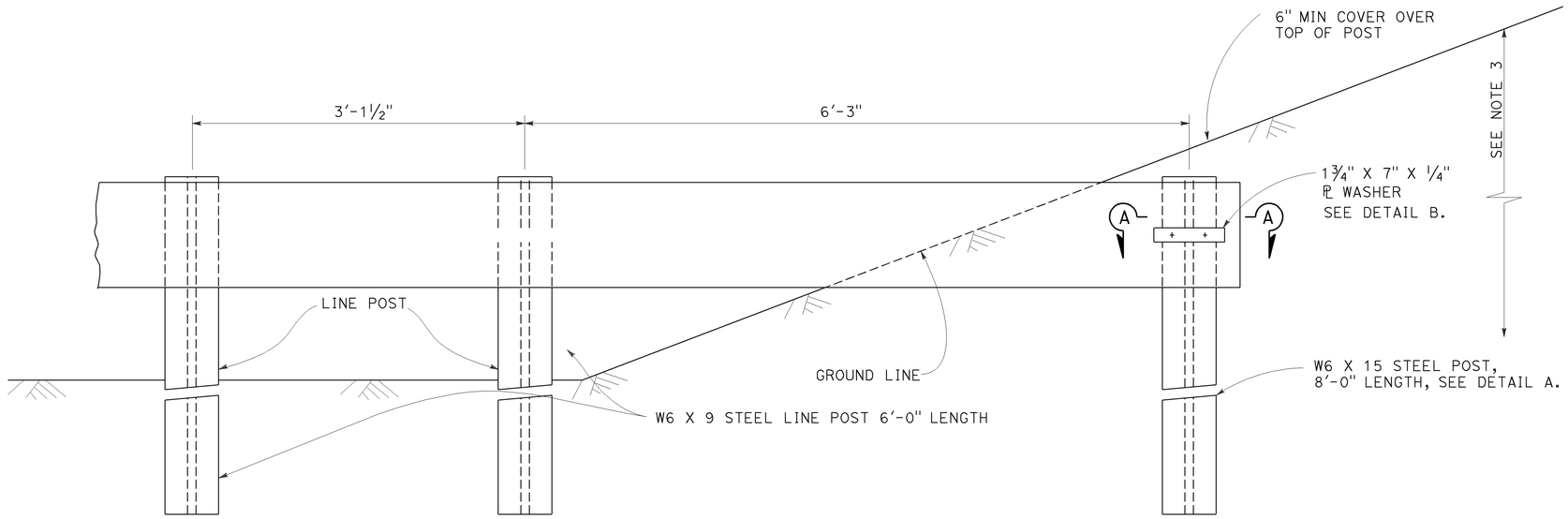

BURIED POST END ANCHOR - TYPE 31

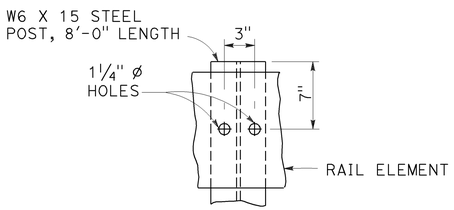

DETAIL A

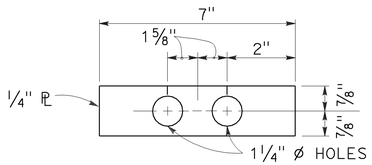

DETAIL B

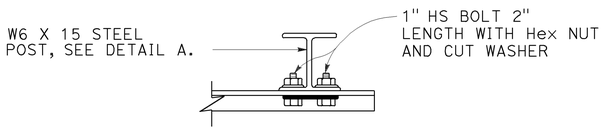

SECTION A-A

CONSTRUCTION DETAILS

NO SCALE

C-7

STATE OF CALIFORNIA - DEPARTMENT OF TRANSPORTATION
DIVISION OF ENGINEERING
FUNCTIONAL SUPERVISOR: DOUGLAS S. JONES
CALCULATED-DESIGNED BY
CHECKED BY
SCOTT FOSTER
REVISED BY
DATE REVISED

LAST REVISION DATE PLOTTED => 10-AUG-2011
TIME PLOTTED => 10:05

Dist	COUNTY	ROUTE	POST MILES TOTAL PROJECT	SHEET No.	TOTAL SHEETS
03	Sie	49	16.9/41.4	12	31

Douglas S. Jones 6-6-11
REGISTERED CIVIL ENGINEER DATE

6-28-11
PLANS APPROVAL DATE

REGISTERED PROFESSIONAL ENGINEER
DOUGLAS S. JONES
No. C42337
Exp. 03-31-12
CIVIL
STATE OF CALIFORNIA

THE STATE OF CALIFORNIA OR ITS OFFICERS OR AGENTS SHALL NOT BE RESPONSIBLE FOR THE ACCURACY OR COMPLETENESS OF SCANNED COPIES OF THIS PLAN SHEET.

NOTES:

1. AN ET (STEEL) AS MANUFACTURED BY TRINITY INDUSTRIES, INC. OR AN SKT-SP-MGS AS MANUFACTURED BY ROAD SYSTEMS INC. SHALL BE INSTALLED ACCORDING TO MANUFACTURER'S RECOMMENDATIONS. FOR ADDITIONAL DETAILS REFER TO MANUFACTURER'S INSTALLATION INSTRUCTIONS.
2. TERMINAL SYSTEM SKT-SP-MGS OR ET (STEEL) MUST BE CONSTRUCTED THAT THE FULL LENGTH OF THE TERMINAL SYSTEM GUARD RAILING IS IN STRAIGHT ALIGNMENT. EITHER TERMINAL SYSTEM CAN BE FLARED AT A MAXIMUM RATE OF 25:1 TO PREVENT THE IMPACT HEAD FROM ENCROACHING ON THE SHOULDER. THE FLARE IS NOT REQUIRED AND MAY BE DECREASED OR ELIMINATED FOR SPECIFIC INSTALLATIONS.
3. LOCATIONS OF NESTED RAIL TO BE DETERMINED BY THE ENGINEER.
4. REFER TO A77 SERIES OF STANDARD PLANS FOR ADDITIONAL DETAILS NOT SHOWN.

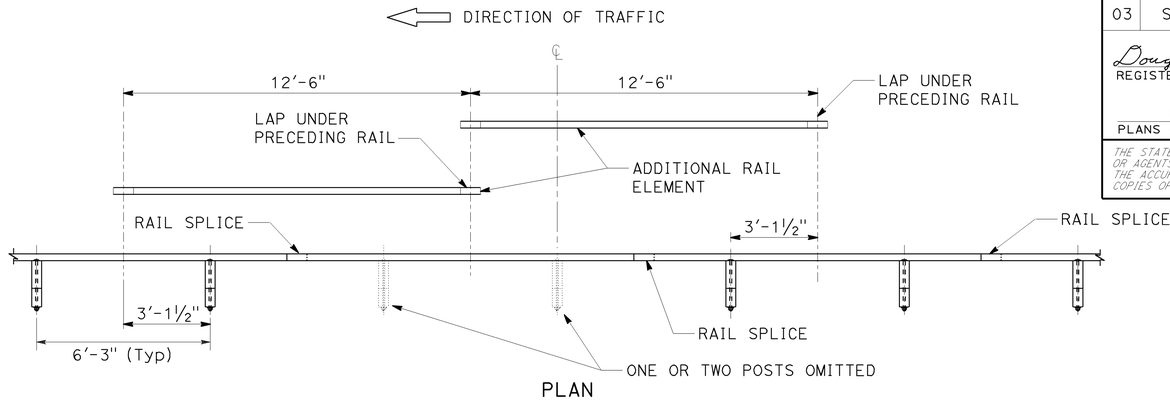

PLAN

NESTED METAL BEAM GUARD RAILING

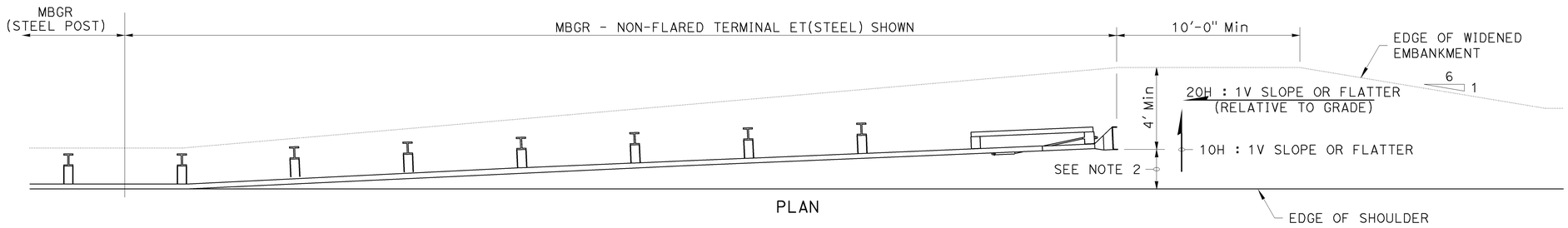

PLAN

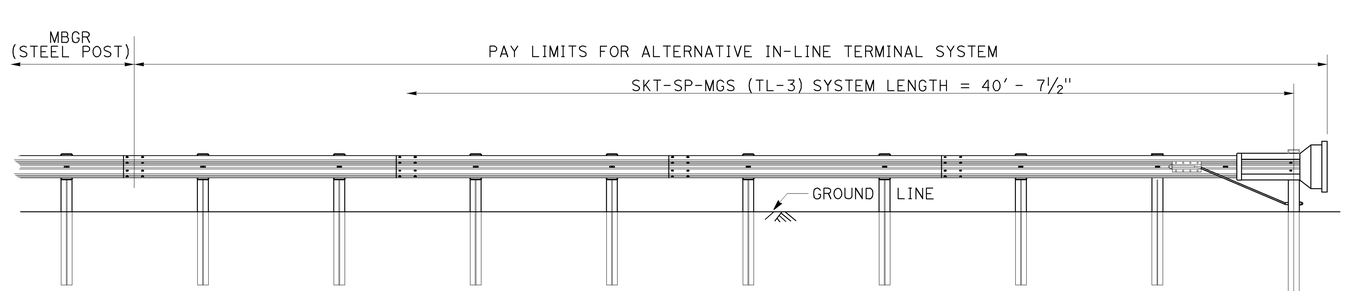

ELEVATION
SKT-SP-MGS

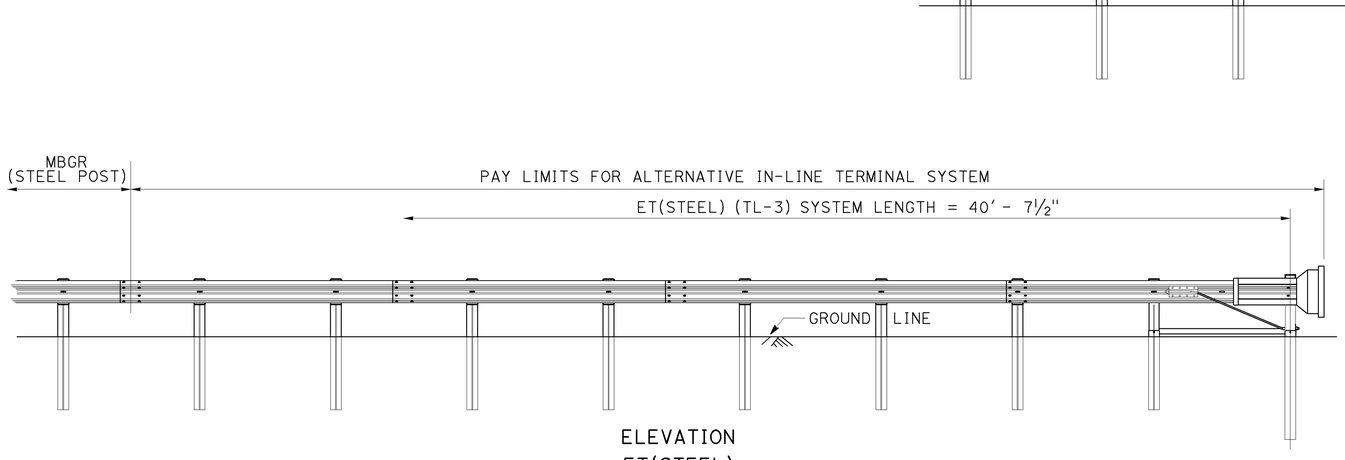

ELEVATION
ET(STEEL)

ALTERNATIVE IN-LINE TERMINAL SYSTEM - TYPE 31

CONSTRUCTION DETAILS

NO SCALE

C-8

STATE OF CALIFORNIA - DEPARTMENT OF TRANSPORTATION
DIVISION OF ENGINEERING
FUNCTIONAL SUPERVISOR: DOUGLAS S. JONES
CALCULATED-DESIGNED BY: SCOTT FOSTER
CHECKED BY
REVISED BY
DATE REVISED

LAST REVISION 11-23-10
DATE PLOTTED => 10-AUG-2011
TIME PLOTTED => 10:06

BORDER LAST REVISED 7/2/2010
USERNAME => s134507
DGN FILE => 03000201180a008.dgn
RELATIVE BORDER SCALE IS IN INCHES 0 1 2 3
UNIT 0307
PROJECT NUMBER & PHASE 03000201181

Dist	COUNTY	ROUTE	POST MILES TOTAL PROJECT	SHEET No.	TOTAL SHEETS
03	Sie	49	16.9/41.4	13	31

Douglas S. Jones 6-6-11
REGISTERED CIVIL ENGINEER DATE

DOUGLAS S. JONES No. C42337 Exp. 03-31-12 CIVIL — REGISTERED PROFESSIONAL ENGINEER — STATE OF CALIFORNIA

6-28-11
PLANS APPROVAL DATE

THE STATE OF CALIFORNIA OR ITS OFFICERS OR AGENTS SHALL NOT BE RESPONSIBLE FOR THE ACCURACY OR COMPLETENESS OF SCANNED COPIES OF THIS PLAN SHEET.

TABLE A

POST OFFSET DIMENSIONS		
Post No.	3'-0" System End Offset	3'-6" System End Offset
1	36"	42"
2	22¼"	27¾"
3	11¾"	16¼"
4	6¾"	10⅝"
5	3"	6"
6	¾"	2¾"
7	0"	¾"
8	0"	0"

See Note 12

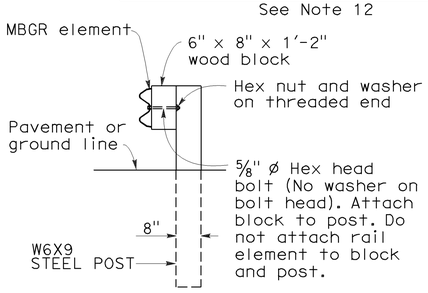

SECTION A-A

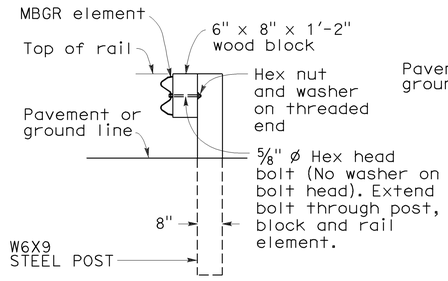

SECTION B-B

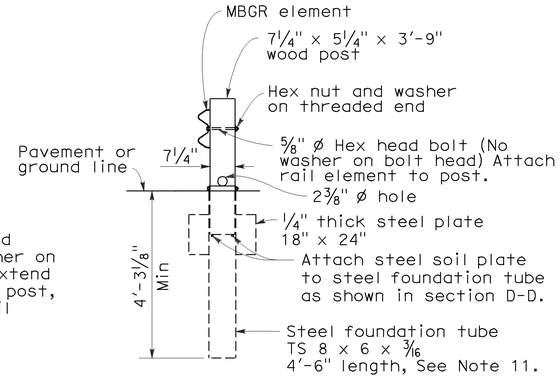

SECTION C-C

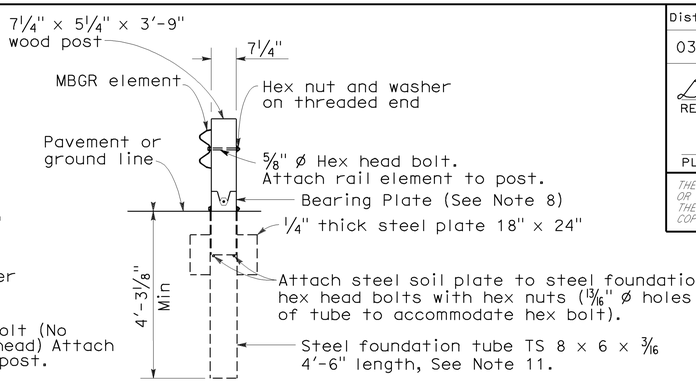

SECTION D-D
(Terminal Section not shown)

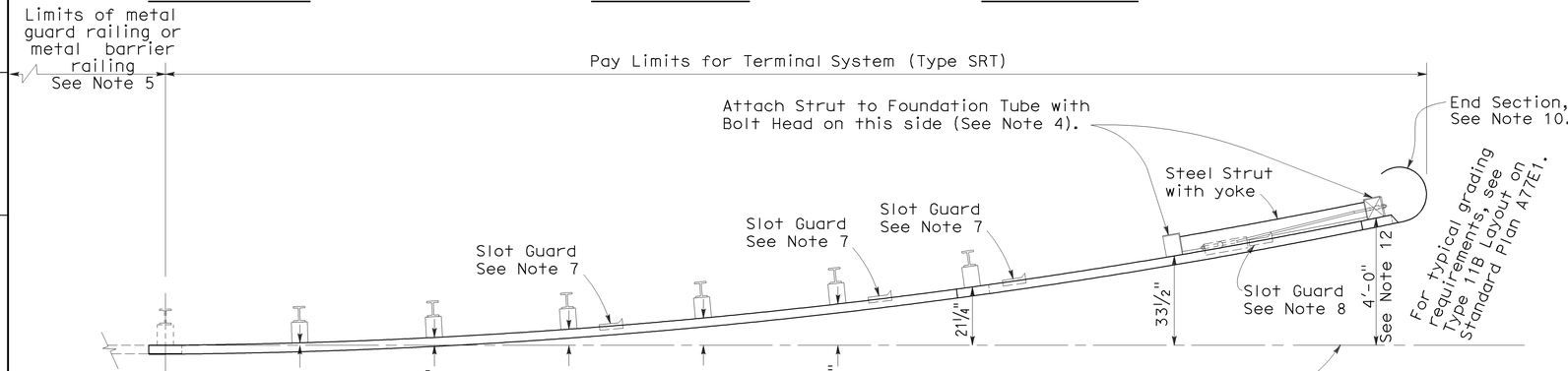

PLAN

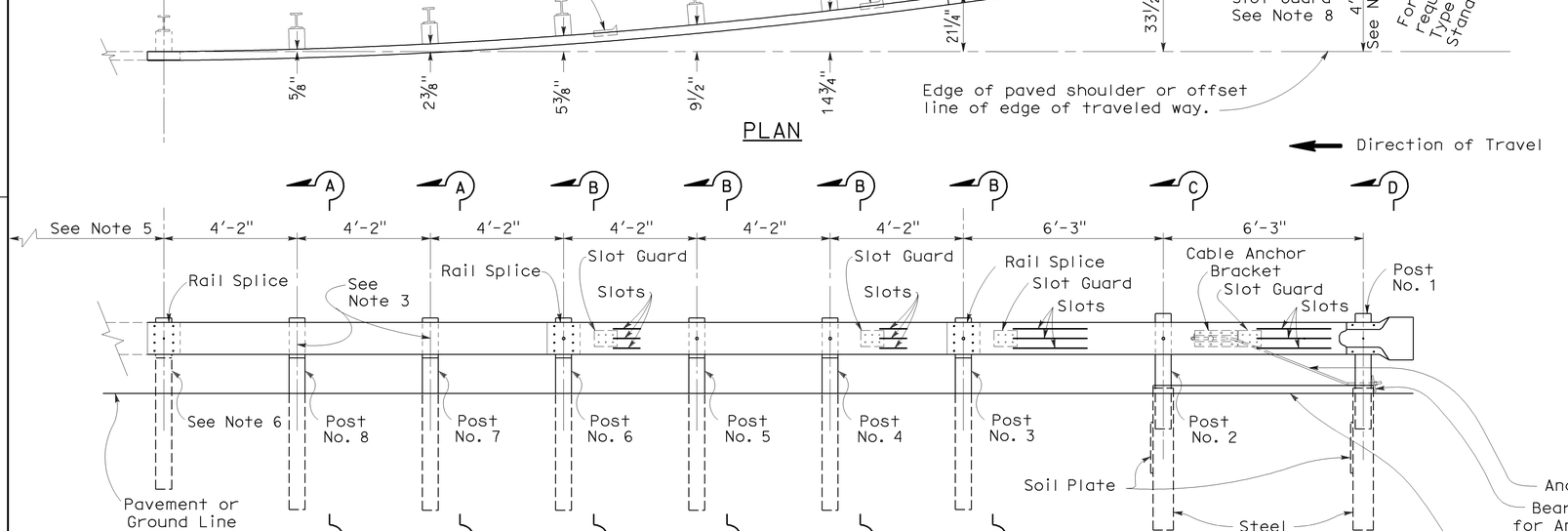

ELEVATION

TERMINAL SYSTEM (TYPE SRT)

(8 Post System)
See Note 9

NOTES:

1. For additional details of Terminal System (Type SRT), refer to the manufacturer's installation instructions.
2. The post offset dimensions are given to the center of the traffic face of the block, except at the first two posts, where the dimension is to the center of the traffic face of the post. Offset points are to be located by chord measurements at the back of the rail equal to the nominal post spacings shown. Posts are to be set approximately radial to the railing at each post locations.
3. Do not attach rail elements to posts 7 and 8.
4. Attach strut to Post Nos. 1 and 2 foundation tubes with ⅝" ø hex head bolts, washers and hex nuts. Bolts extend through the strut, steel foundation tube, and wood posts.
5. For the length and type of metal beam guard railing or metal barrier railing the terminal system is attached to, see the Project Plans.
6. Attach rail element to this post and block. Payment for this post, block and hardware is included in payment for the type of railing or barrier the terminal system is attached to, not part of payment for Terminal System (Type SRT).
7. The deflector angle of the slot guard is to be positioned immediatley downstream of the slots.
8. For bearing plate orientation, refer to the manufacturer's installation instructions.
9. For typical use of this terminal system with guard railing, see the A77E, A77F and A77G Series of Standard Plans. See Standard Plan A78E for typical use of this terminal system with single thrie beam barrier.
10. A complete wrap around end section may continued to be used in existing installations. New installations shall be constructed with the ¾ wrap end section shown.
11. A 6'-0" length steel foundation tube, TS 8 x 6 x 3/16 without a soil plate, may be furnished and installed in place of the 4'-6" length steel foundation tube and soil plate shown. Minimum embedment of the 6'-0" length tube shall be 5'-9". A ⅝" ø hex head bolt and nut shall be installed in the hole in 6'-0" length tube to keep the wood post from dropping into the tube.
12. Where site conditions will not accommodate use of the standard 4'-0" system end offset, 3'-6" or 3'-0" system end offsets, as applicable, may be used. See Table A for post offset dimensions for 3'-6" and 3'-0" system end offsets.
13. REFER TO A77 SERIES OF STANDARD PLANS FOR ADDITIONAL DETAILS NOT SHOWN.

METAL BEAM RAILING TERMINAL SYSTEM (TYPE SRT)

CONSTRUCTION DETAILS

NO SCALE

C-9

STATE OF CALIFORNIA - DEPARTMENT OF TRANSPORTATION
DIVISION OF ENGINEERING
FUNCTIONAL SUPERVISOR: DOUGLAS S. JONES
CALCULATED-DESIGNED BY
CHECKED BY
REVISED BY
DATE REVISED

LAST REVISION 7-18-11
DATE PLOTTED => 10-AUG-2011
TIME PLOTTED => 10:06

NOTES:
1. EXACT SIGN LOCATION TO BE DETERMINED BY THE ENGINEER.
2. (N) NOT A SEPARATE PAY ITEM, FOR INFORMATION ONLY.

Dist	COUNTY	ROUTE	POST MILES TOTAL PROJECT	SHEET No.	TOTAL SHEETS
03	Sie	49	16.9/41.4	14	31

Douglas S. Jones 6-6-11
REGISTERED CIVIL ENGINEER DATE

6-28-11
PLANS APPROVAL DATE

REGISTERED PROFESSIONAL ENGINEER
DOUGLAS S. JONES
No. C42337
Exp. 03-31-12
CIVIL
STATE OF CALIFORNIA

THE STATE OF CALIFORNIA OR ITS OFFICERS OR AGENTS SHALL NOT BE RESPONSIBLE FOR THE ACCURACY OR COMPLETENESS OF SCANNED COPIES OF THIS PLAN SHEET.

STATIONARY MOUNTED CONSTRUCTION AREA SIGNS

SIGN LOCATION (POST MILE)	DESCRIPTION	FACING TRAFFIC NB	SB	EB	WB	SIGN LETTER	SIGN CODE	PANEL SIZE	SIGN MESSAGE	NUMBER POST & SIZE	NUMBER OF SIGNS (N)
16.786	ROUTE 49	1				C	G20-1	60" x 30"	ROAD WORK NEXT 25 MILES	2 - 4" x 6"	1
16.805	ROUTE 49		1			F	C14(CA)	48" x 24"	END ROAD WORK	1 - 4" x 6"	1
16.805	ROUTE 49	1				E	C40(CA) (MOD)	48" x 36"	TRAFFIC FINES DOUBLED IN WORK ZONES	1 - 4" x 6"	1
19.597	Dr TO SHANGRI-LA				1	A	W20-1	36" x 36"	ROAD WORK AHEAD	1 - 4" x 6"	1
				1		B	G20-2	36" x 18"	END ROAD WORK	1 - 4" x 4"	1
22.576	FOREST ROUTE 93			1		A	W20-1	36" x 36"	ROAD WORK AHEAD	1 - 4" x 6"	1
					1	B	G20-2	36" x 18"	END ROAD WORK	1 - 4" x 4"	1
29.174	CEMETERY Rd			1		A	W20-1	36" x 36"	ROAD WORK AHEAD	1 - 4" x 6"	1
					1	B	G20-2	36" x 18"	END ROAD WORK	1 - 4" x 4"	1
29.222	CASTAGNA ALLEY			1		A	W20-1	36" x 36"	ROAD WORK AHEAD	1 - 4" x 6"	1
					1	B	G20-2	36" x 18"	END ROAD WORK	1 - 4" x 4"	1
29.238	HAYES Rd				1	A	W20-1	36" x 36"	ROAD WORK AHEAD	1 - 4" x 6"	1
				1		B	G20-2	36" x 18"	END ROAD WORK	1 - 4" x 4"	1
29.273	BUTTE St			1		A	W20-1	36" x 36"	ROAD WORK AHEAD	1 - 4" x 6"	1
					1	B	G20-2	36" x 18"	END ROAD WORK	1 - 4" x 4"	1
29.348	SPRING St				1	A	W20-1	36" x 36"	ROAD WORK AHEAD	1 - 4" x 6"	1
				1		B	G20-2	36" x 18"	END ROAD WORK	1 - 4" x 4"	1
29.533	CHURCH St				1	A	W20-1	36" x 36"	ROAD WORK AHEAD	1 - 4" x 6"	1
				1		B	G20-2	36" x 18"	END ROAD WORK	1 - 4" x 4"	1
29.625	MAPLE GROVE Ln				1	A	W20-1	36" x 36"	ROAD WORK AHEAD	1 - 4" x 6"	1
				1		B	G20-2	36" x 18"	END ROAD WORK	1 - 4" x 4"	1
29.660	BUTTE Ln			1		A	W20-1	36" x 36"	ROAD WORK AHEAD	1 - 4" x 6"	1
					1	B	G20-2	36" x 18"	END ROAD WORK	1 - 4" x 4"	1
29.788	WILD PLUM Dr				1	A	W20-1	36" x 36"	ROAD WORK AHEAD	1 - 4" x 6"	1
				1		B	G20-2	36" x 18"	END ROAD WORK	1 - 4" x 4"	1
30.293	NEVADA Dr				1	A	W20-1	36" x 36"	ROAD WORK AHEAD	1 - 4" x 6"	1
				1		B	G20-2	36" x 18"	END ROAD WORK	1 - 4" x 4"	1
30.576	LEWIS Ln				1	A	W20-1	36" x 36"	ROAD WORK AHEAD	1 - 4" x 6"	1
				1		B	G20-2	36" x 18"	END ROAD WORK	1 - 4" x 4"	1
34.294	GOLD LAKE Rd			1		A	W20-1	36" x 36"	ROAD WORK AHEAD	1 - 4" x 6"	1
					1	B	G20-2	36" x 18"	END ROAD WORK	1 - 4" x 4"	1
34.294	GREEN Rd				1	A	W20-1	36" x 36"	ROAD WORK AHEAD	1 - 4" x 6"	1
				1		B	G20-2	36" x 18"	END ROAD WORK	1 - 4" x 4"	1
40.161	NORDIC SKI TRAILHEAD			1		A	W20-1	36" x 36"	ROAD WORK AHEAD	1 - 4" x 6"	1
					1	B	G20-2	36" x 18"	END ROAD WORK	1 - 4" x 4"	1
41.199	YUBA PASS CAMPGROUND			1	1	A	W20-1	36" x 36"	ROAD WORK AHEAD	1 - 4" x 6"	2
				1	1	B	G20-2	36" x 18"	END ROAD WORK	1 - 4" x 4"	2
41.495	ROUTE 49		1			E	C40(CA)	108" x 42"	TRAFFIC FINES DOUBLED IN CONSTRUCTION ZONES	2 - 6" x 6"	1
41.495	ROUTE 49	1	1			F	G20-2	48" x 24"	END ROAD WORK	1 - 4" x 6"	1
41.514	ROUTE 49		1			C	G20-1	90" x 48"	ROAD WORK NEXT 25 MILES	2 - 6" x 6"	1

SIGN DETAILS

C G20-1 [Spec] (25)

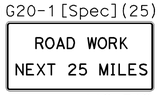

6" C SERIES LETTERS

60"x30"

RETROREFLECTIVE ORANGE BACKGROUND WITH BLACK LEGEND AND BORDER.

E C40(Mod)<CA>

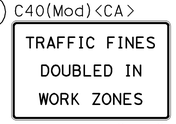

4" D SERIES LETTERS

48"x36"

RETROREFLECTIVE WHITE BACKGROUND WITH BLACK LEGEND AND BORDER.

CONSTRUCTION AREA SIGNS

NO SCALE

CS-1

STATE OF CALIFORNIA - DEPARTMENT OF TRANSPORTATION
DIVISION OF ENGINEERING
Caltrans
FUNCTIONAL SUPERVISOR: DOUGLAS S. JONES
CALCULATED-DESIGNED BY: KAO THAO
CHECKED BY
REVISED BY
DATE REVISED

LAST REVISION DATE PLOTTED => 10-AUG-2011
TIME PLOTTED => 10:06
12-21-10

BORDER LAST REVISED 7/2/2010
USERNAME => s134507
DGN FILE => 03000201181a001.dgn
RELATIVE BORDER SCALE IS IN INCHES 0 1 2 3
UNIT 0307
PROJECT NUMBER & PHASE 03000201181

Dist	COUNTY	ROUTE	POST MILES TOTAL PROJECT	SHEET No.	TOTAL SHEETS
03	Sie	49	16.9/41.4	15	31

Douglas S. Jones 6-6-11
REGISTERED CIVIL ENGINEER DATE

6-28-11
PLANS APPROVAL DATE

REGISTERED PROFESSIONAL ENGINEER
DOUGLAS S. JONES
No. C42337
Exp. 03-31-12
CIVIL
STATE OF CALIFORNIA

THE STATE OF CALIFORNIA OR ITS OFFICERS OR AGENTS SHALL NOT BE RESPONSIBLE FOR THE ACCURACY OR COMPLETENESS OF SCANNED COPIES OF THIS PLAN SHEET.

4" THERMOPLASTIC TRAFFIC STRIPE (RECESSED)

POST MILE LIMITS	(BROKEN 36'-12')		(SOLID)	
	DETAIL 5	DETAIL 18	DETAIL 18	DETAIL 21
	LF	LF	LF	LF
16.90 TO 17.70				8,466
17.70 TO 17.80		503	503	
17.80 TO 17.91	602			
17.91 TO 18.05		710	710	
18.05 TO 20.95				30,326
20.95 TO 21.06		837	837	
21.06 TO 21.11		264	264	
21.11 TO 21.32				2,218
21.32 TO 21.35		132	132	
21.35 TO 21.45	570			
21.45 TO 21.56		560	560	
21.56 TO 22.56				10,014
22.56 TO 22.67		597	597	
22.67 TO 23.10				4,488
23.10 TO 23.18		396	396	
23.18 TO 25.41				23,572
25.41 TO 25.51		544	544	
25.51 TO 25.62		576	576	
25.62 TO 30.59				52,254
30.59 TO 30.66		392	392	
30.66 TO 30.72	348			
30.72 TO 30.90		919	919	
30.90 TO 33.80				30,558
33.80 TO 33.91		586	586	
33.91 TO 34.04		629	629	
34.04 TO 35.21				12,208
35.21 TO 35.31		541	541	
35.31 TO 35.44	671			
35.44 TO 35.49		248	248	
35.49 TO 36.38				9,302
36.38 TO 36.47		486	486	
36.47 TO 36.55	410			
36.55 TO 36.67		625	625	
36.67 TO 41.40				48,416
SUBTOTAL	2,601	9,545	9,545	231,822
TOTAL	12,146		241,367	

4" TWO-COMPONENT PAINT TRAFFIC STRIPE

POST MILE LIMITS	DETAIL 27B	
	LEFT	RIGHT
	LF	LF
16.90 TO 17.70	4,222	4,245
17.70 TO 17.80	512	494
17.80 TO 17.91	611	593
17.91 TO 18.05	724	696
18.05 TO 20.95	15,058	15,197
20.95 TO 21.06	839	835
21.06 TO 21.11	269	259
21.11 TO 21.32	1,098	1,120
21.32 TO 21.35	132	132
21.35 TO 21.45	580	560
21.45 TO 21.56	570	549
21.56 TO 22.56	4,985	5,028
22.56 TO 22.67	422	497
22.67 TO 23.18	2,247	2,242
23.10 TO 23.18	401	391
23.18 TO 25.41	11,790	11,781
25.41 TO 25.51	542	546
25.51 TO 25.62	578	573
25.62 TO 30.58	25,628	25,355
30.58 TO 30.66	392	345
30.66 TO 30.72	348	348
30.72 TO 30.90	795	921
30.90 TO 33.80	15,066	15,276
33.80 TO 33.91	586	586
33.91 TO 34.04	627	631
34.04 TO 35.21	6,004	5,947
35.21 TO 35.31	542	539
35.31 TO 35.44	671	670
35.44 TO 35.49	197	245
35.49 TO 36.38	4,650	4,653
36.38 TO 36.47	487	485
36.47 TO 36.55	410	411
36.55 TO 36.67	617	632
36.67 TO 41.40	23,974	24,654
SUBTOTAL	126,575	127,436
TOTAL	254,011	

4" TWO-COMPONENT PAINT TRAFFIC STRIPE (BROKEN 12-3)

LOCATION		DETAIL 27C	
		LEFT	RIGHT
DESCRIPTION	PM	LF	LF
Dr TO "SHANGRI-LA"	19.60		76
DOWNIEVILLE MAINTENANCE STATION	19.77	162	
FOREST ROUTE 93	22.58	178	
UNION FLAT CAMPGROUND	22.61		95
LOGANVILLE CAMPGROUND	27.72	249	241
CEMETERY Rd	29.17	97	
CASTAGNA ALLEY	29.22	76	
HAYES Rd	29.24		53
BUTTE St	29.27	43	
SPRING St	29.35		32
CHURCH St	29.53		39
MAPLE GROVE Ln	29.63		67
WILD PLUM Dr	29.79		124
SIERRA PARK MUSEUM	30.22	144	
NEVADA Dr	30.29		227
LEWIS Ln	30.58		158
PACIFIC CREST TRAIL HEAD	30.74	120	
REST AREA (S END)	32.24	70	
REST AREA (N END)	32.33	144	
GOLD LAKE Rd/GREEN Rd	34.29	99	158
CARVIN CR Rd	35.48	54	
HASKELL CREEK Rd	36.68	68	
CHAPMAN SADDLE Rd	40.16	127	
YUBA PASS CAMPGROUND	41.25	184	294
SUBTOTAL		1,815	1,564
TOTAL		3,379	

REVISED BY | DATE REVISED

CALCULATED-DESIGNED BY | CHECKED BY

FUNCTIONAL SUPERVISOR: DOUGLAS S. JONES

STATE OF CALIFORNIA - DEPARTMENT OF TRANSPORTATION
Caltrans®
DIVISION OF ENGINEERING

PAVEMENT DELINEATION QUANTITIES

PDQ-1

LAST REVISION | DATE PLOTTED => 10-AUG-2011
02-09-11 | TIME PLOTTED => 10:06

Dist	COUNTY	ROUTE	POST MILES TOTAL PROJECT	SHEET No.	TOTAL SHEETS
03	Sie	49	16.9/41.4	16	31

Douglas S. Jones 6-6-11
REGISTERED CIVIL ENGINEER DATE

6-28-11
PLANS APPROVAL DATE

REGISTERED PROFESSIONAL ENGINEER
DOUGLAS S. JONES
No. C42337
Exp. 03-31-12
CIVIL
STATE OF CALIFORNIA

THE STATE OF CALIFORNIA OR ITS OFFICERS OR AGENTS SHALL NOT BE RESPONSIBLE FOR THE ACCURACY OR COMPLETENESS OF SCANNED COPIES OF THIS PLAN SHEET.

TWO-COMPONENT PAINT PAVEMENT MARKING

LOCATION		DETAIL	
		LIMIT LINE	"STOP"
DESCRIPTION	PM	SQFT	SQFT
Dr TO SHANGRI-LA	19.60	26.00	22.00
DOWNIEVILLE MAINTENANCE STATION	19.77	35.00	22.00
FOREST ROUTE 93	22.58	46.00	22.00
UNION FLAT CAMPGROUND	22.62	31.00	22.00
CEMETERY Rd	29.17	45.00	22.00
CASTAGNA ALLEY	29.22	45.00	22.00
HAYES Rd	29.24	45.00	22.00
BUTTE St	29.27	45.00	22.00
SPRING St	29.35	45.00	22.00
CHURCH St	29.53	45.00	22.00
MAPLE GROVE Ln	29.63	45.00	22.00
WILD PLUM Rd	29.79	59.00	22.00
SIERRA PARK MUSEUM	30.22	35.00	22.00
NEVADA Dr	30.29	41.00	22.00
LEWIS Ln	30.58	34.00	22.00
PACIFIC CREST TRAIL HEAD	30.74	30.00	22.00
REST AREA (S END)	32.24	24.00	22.00
REST AREA (N END)	32.33	27.00	22.00
GOLD LAKE Rd	34.29	25.00	22.00
GREEN Rd	34.29	35.00	22.00
CARVIN CREEK HOMESITES	35.48	35.00	22.00
CHAPMAN SADDLE Rd	40.04	20.00	22.00
YUBA PASS CAMPGROUND	41.25	44.00	22.00
YUBA PASS	41.11	47.00	22.00
	SUBTOTAL	909	528
	TOTAL	1437	

MARKER & DELINEATOR QUANTITIES

MBGR #	LOCATION POST MILE * LIMITS			OBJECT MARKER (TYPE P) LEFT	OBJECT MARKER (TYPE P) RIGHT	OBJECT MARKER (TYPE L-1)	DELINEATOR (CLASS 2) TYPE E
				EA	EA	EA	EA
01	Rt	18.010	18.262			1	14
02	Rt	18.450	18.581			1	6
03	Rt	18.718	18.849				7
04	Rt	19.174	19.331			1	14
05	Rt	19.810	19.831			1	2
06	Rt	19.839	19.858				2
07	Rt	19.875	19.887				
08	Rt	19.904	19.931				3
09	Rt	19.940	19.961				3
10	Rt	20.026	20.123				15
11	Rt	20.180	20.272			1	5
12	Rt	20.415	20.868			1	21
13	Rt	21.213	21.251				3
14	Rt	21.927	22.095			1	7
15	Rt	22.181	22.329			1	10
16	Rt	22.694	22.966			1	19
17	Rt	23.241	23.364			1	6
18	Rt	23.637	24.043			1	16
19	Lt	24.033	24.043	1	1		
20	Lt	24.048	24.056	1	1		
21	Rt	24.048	24.070				
22	Rt	24.124	24.217			1	1
23	Rt	24.579	24.873			1	4
24	Rt	24.874	25.000			2	35
25	Rt	25.983	26.298			1	20
26	Rt	26.443	26.649			1	19
27	Rt	30.010	30.139			1	9
28	Rt	30.910	30.950			1	3
29	Rt	31.232	31.279			1	3
30	Rt	31.559	31.661			1	6
31	Rt	31.673	31.728			1	4
32	Rt	31.886	31.926			1	2
33	Rt	32.858	32.873			1	
34	Lt	32.934	32.949			1	
35	Rt	36.614	36.627			1	
36	Lt	36.619	36.631			1	
37	Rt	36.632	36.644			1	
38	Lt	36.637	36.649			1	
39	Rt	36.944	36.976			2	
40	Lt	36.952	36.972			2	
41	Rt	37.092	37.104			1	
42	Lt	37.111	37.121			1	
			SUBTOTAL	2	2	35	259
			TOTAL	4		35	259

* POST MILE LOCATIONS ARE APPROXIMATE.

EXACT OBJECT MARKER AND DELINEATOR LOCATIONS TO BE DETERMINED BY ENGINEER.

TEMPORARY DRAINAGE INLET PROTECTION

LOCATION*	QTY (EA)
PM 29.17 TO PM 29.22	5
TOTAL	5

* FOUR LOCATIONS TO BE ADJUSTED IN THE POST MILE LIMITS

REMOVE FENCE

POST MILE TO* POST MILE		QTY (LF)
Lt 31.500	31.565	344
Lt 31.654	31.791	724
Lt 31.916	32.020	550
Lt 32.361	32.450	470
Lt 32.460	32.498	201
Lt 32.687	32.744	301
Rt 32.934	32.998	338
Rt 33.081	33.143	328
Lt 33.230	33.357	671
Lt 33.550	33.720	898
Lt 33.790	33.880	476
TOTAL		5301

* POST MILE LOCATIONS ARE APPROXIMATE.

CONCRETE BARRIER (TYPE K)

POST MILE TO* POST MILE		QTY (LF)
Lt 31.500	31.600	530
Lt 31.700	31.800	530
Lt 31.900	32.100	1060
Lt 32.400	32.550	790
Lt 32.700	32.750	260
Rt 32.950	33.000	260
Rt 33.050	33.150	530
Lt 33.240	33.990	790
Lt 33.560	33.740	950
Lt 33.810	33.910	530
TOTAL		6230

* POST MILE LOCATIONS ARE APPROXIMATE.

ROADWAY EXCAVATION

POST MILE TO* POST MILE		QTY (CY)
Lt 31.500	31.600	98
Lt 31.700	31.800	98
Lt 31.900	32.100	196
Lt 32.400	32.550	146
Lt 32.700	32.750	48
Rt 32.950	33.000	48
Rt 33.050	33.150	98
Lt 33.240	33.990	146
Lt 33.560	33.740	176
Lt 33.810	33.910	98
TOTAL		1154

* POST MILE LOCATIONS ARE APPROXIMATE. SEE CONCRETE BARRIER (TYPE K) TABLE THIS SHEET FOR ASSOCIATED WORK

SUMMARY OF QUANTITIES

Q-1

REVISED BY | DATE REVISED
KAO THAO
CALCULATED-DESIGNED BY | CHECKED BY
FUNCTIONAL SUPERVISOR
DOUGLAS S. JONES
STATE OF CALIFORNIA - DEPARTMENT OF TRANSPORTATION
DIVISION OF ENGINEERING

LAST REVISION 02-09-11 | DATE PLOTTED => 10-AUG-2011 | TIME PLOTTED => 10:06

BORDER LAST REVISED 7/2/2010 | USERNAME => s134507 | DGN FILE => 0300020118pa001.dgn | RELATIVE BORDER SCALE IS IN INCHES 0 1 2 3 | UNIT 0307 | PROJECT NUMBER & PHASE 03000201181

Dist	COUNTY	ROUTE	POST MILES TOTAL PROJECT	SHEET No.	TOTAL SHEETS
03	Sie	49	16.9/41.4	17	31

Douglas S. Jones 6-6-11
REGISTERED CIVIL ENGINEER DATE

6-28-11
PLANS APPROVAL DATE

REGISTERED PROFESSIONAL ENGINEER — DOUGLAS S. JONES No. C42337 Exp. 03-31-12 CIVIL — STATE OF CALIFORNIA

THE STATE OF CALIFORNIA OR ITS OFFICERS OR AGENTS SHALL NOT BE RESPONSIBLE FOR THE ACCURACY OR COMPLETENESS OF SCANNED COPIES OF THIS PLAN SHEET.

METAL BEAM GUARD RAILING

POST MILE TO* POST MILE				MBGR (8' STEEL POST)	END ANCHOR ASSEMBLY (TYPE SFT-31)	ALTERNATIVE FLARED TERMINAL SYSTEM	ALTERNATIVE IN-LINE TERMINAL SYSTEM	TRANSITION RAILING (TYPE WB)	END CAP (TYPE A)	TYPE LAYOUT	(N) W6 X 15 STEEL POST
				LF	EA	EA	EA	EA	EA		EA
01	R†	18.010	18.262	1,285		2				TYPE 11E LAYOUT	
02	R†	18.450	18.581	578		1	1			TYPE 11H LAYOUT	
03	R†	18.718	18.849	644		2				TYPE 11E LAYOUT	
04	R†	19.174	19.331	710		2				TYPE 11E LAYOUT	9
05	R†	19.810	19.831	45		1		1		TYPE 12B LAYOUT	
06	R†	19.839	19.858	25			1	1		TYPE 12BB LAYOUT	
07	R†	19.875	19.887	27	1	1			1	TYPE 11B LAYOUT	
08	R†	19.904	19.931	144	2				2		
09	R†	19.940	19.961	219	2				2		
10	R†	20.026	20.123	476	1	1			1	TYPE 11G LAYOUT [a]	
11	R†	20.180	20.272	415		2				TYPE 11E LAYOUT	
12	R†	20.415	20.868	2,362		2				TYPE 11E LAYOUT	13
13	R†	21.213	21.251	135		2				TYPE 11E LAYOUT	3
14	R†	21.927	22.095	491		2				TYPE 11E LAYOUT	
15	R†	22.181	22.329	707		2				TYPE 11E LAYOUT	
16	R†	22.694	22.966	1,391		2				TYPE 11E LAYOUT	34
17	R†	23.241	23.364	586		2				TYPE 11E LAYOUT	
18	R†	23.637	24.043	1,988		2				TYPE 12B LAYOUT	60
19	L†	24.033	24.043	0			1	1		TYPE 12A LAYOUT	
20	L†	24.048	24.056	0			1	1		TYPE 12AA LAYOUT	
21	R†	24.048	24.070	55		1	1			TYPE 12BB LAYOUT	
22	R†	24.124	24.217	410		1	1			TYPE 11H LAYOUT	
23	R†	24.579	24.873	1,483	1	1			1	TYPE 11B LAYOUT	
24	R†	24.874	25.000	669	1	1			1	TYPE 11B LAYOUT [b]	
25	R†	25.983	26.298	1,530		2				TYPE 11E LAYOUT	25
26	R†	26.443	26.649	1,028		1	1			TYPE 11J LAYOUT	14
27	R†	30.010	30.139	601						TYPE 11D LAYOUT	
28	R†	30.910	30.950	142						TYPE 11D LAYOUT	
29	R†	31.232	31.279	135						TYPE 11D LAYOUT	
30	R†	31.559	31.661	416						TYPE 11D LAYOUT	
31	R†	31.673	31.728	190						TYPE 11D LAYOUT	
32	R†	31.886	31.926	90						TYPE 11D LAYOUT	
33	R†	32.858	32.873	0			1	1		TYPE 12A LAYOUT	
34	L†	32.870	32.884	0			1	1		TYPE 12AA LAYOUT	
35	R†	32.923	32.934	12	1			1			
36	L†	32.934	32.949	0			1	1		TYPE 12A LAYOUT	
37	R†	36.614	36.627	0		1		1		TYPE 12B LAYOUT	
38	L†	36.619	36.631	0		1		1		TYPE 12BB LAYOUT	
39	R†	36.632	36.644	0		1		1		TYPE 12BB LAYOUT	
40	L†	36.637	36.649	0		1		1		TYPE 12B LAYOUT	
41	R†	36.944	36.976	99		1	1			TYPE 11H LAYOUT	
42	L†	36.952	36.972	69	1	1				TYPE 11G LAYOUT	
43	R†	37.092	37.104	0		1		1		TYPE 12B LAYOUT	
44	L†	37.094	37.107	0		1		1		TYPE 12BB LAYOUT	
45	R†	37.109	37.120	0		1		1		TYPE 12BB LAYOUT	
46	L†	37.111	37.121	25	1			1		TYPE 12C LAYOUT	
			TOTAL	19,198	11	42	23	16	8		158

* POST MILE LOCATIONS AND LENGTHS ARE APPROXIMATE. MBGR TO BE REMOVED AND REPLACED IN KIND, EXCEPT WHERE NOTED.

a Std PLAN A77E3, DIRECTION OF TRAFFIC, NOTE 4, IS REVERSED.

b Std PLAN A77E1, DIRECTION OF TRAFFIC, NOTE 4, IS REVERSED.

(N) NOT A SEPARATE PAY ITEM, FOR INFORMATION ONLY. SEE C-1 FOR EXISTING PRECAST CONCRETE BEAM DETAIL.

REMOVE ASPHALT CONCRETE DIKE

MBGR #	POST MILE TO POST MILE			QUANTITY
				LF
-	R†	17.164	17.177	69
-	R†	18.010	18.050	216
-	R†	18.605	18.696	481
-	R†	18.893	18.921	148
10	R†	20.070	20.120	264
-	L†	20.183	20.207	129
-	R†	20.195	20.229	178
16	R†	22.747	22.799	273
18	R†	23.833	23.898	344
24	R†	24.874	24.950	402
-	R†	29.110	29.130	106
-	R†	29.830	29.857	143
-	L†	29.843	29.930	460
-	L†	29.942	29.999	301
-	L†	30.070	30.110	212
-	L†	30.123	30.184	323
-	R†	30.216	30.290	391
-	L†	30.305	30.391	455
-	L†	30.398	30.730	1,759
-	R†	30.428	30.559	692
-	R†	30.594	30.709	608
-	R†	30.710	30.836	666
-	L†	30.749	30.779	159
-	L†	30.784	30.890	560
-	L†	30.900	31.010	581
29	R†	31.186	31.438	1,331
-	L†	31.282	31.728	2,355
31	R†	31.663	31.842	946
-	L†	31.845	32.010	872
-	R†	31.999	32.358	1,896
-	L†	32.181	32.193	64
-	L†	32.195	32.213	95
-	L†	32.361	32.570	1,104
-	R†	32.540	32.640	528
-	L†	32.580	32.818	1,257
33	R†	32.816	32.873	301
34	L†	32.826	32.884	307
35	R†	32.923	33.562	3,374
36	L†	32.934	32.940	72
-	L†	33.359	33.371	62
-	L†	33.386	33.448	328
-	L†	33.478	33.517	207
-	R†	33.570	33.950	2,002
-	L†	33.990	34.115	660
-	L†	34.200	34.263	333
-	R†	34.236	34.286	264
-	R†	34.308	34.325	90
-	R†	38.560	38.640	423
-	R†	38.855	39.142	1,516
-	R†	39.299	39.347	254
-	R†	39.371	39.519	782
-	R†	39.603	39.729	666
-	R†	39.848	39.939	481
-	R†	40.006	40.066	317
-	R†	40.132	40.172	212
-	R†	40.462	40.514	275
-	R†	40.662	40.837	766
			TOTAL	34,060

REMOVE OVERSIDE DRAIN

LOCATION* (POST MILE)		QTY
		EA
R†	30.290	1
L†	30.325	1
L†	30.394	1
L†	30.503	1
L†	30.590	1
R†	30.594	1
L†	30.702	1
R†	30.709	1
R†	30.742	1
L†	30.781	1
L†	30.895	1
L†	31.320	1
L†	31.500	1
L†	31.633	1
R†	61.633	1
R†	31.740	1
L†	31.857	1
R†	32.217	1
L†	32.511	1
L†	32.662	1
R†	32.816	1
R†	33.005	1
R†	33.190	1
R†	33.367	1
R†	33.680	1
R†	33.790	1
L†	34.017	1
L†	34.200	1
R†	34.236	1
R†	38.560	1
R†	38.912	1
R†	38.969	1
R†	39.005	1
R†	39.056	1
R†	39.056	1
R†	39.105	1
R†	39.299	1
R†	39.371	1
R†	39.473	1
R†	39.498	1
R†	39.605	1
R†	39.634	1
R†	39.872	1
R†	40.132	1
R†	40.462	1
R†	40.662	1
R†	40.722	1
R†	40.752	1
TOTAL		48

* POST MILE LOCATION IS APPROXIMATE.

REMOVE METAL BEAM GUARD RAILING

POST MILE* TO POST MILE				QTY
				LF
01	R†	18.010	18.262	1,360
02	R†	18.450	18.581	665
03	R†	18.718	18.849	719
04	R†	19.174	19.331	785
05	R†	19.810	19.831	107
06	R†	19.839	19.858	100
07	R†	19.875	19.887	64
08	R†	19.904	19.931	144
09	R†	19.940	19.961	219
10	R†	20.026	20.123	513
11	R†	20.180	20.272	490
12	R†	20.415	20.868	2,437
13	R†	21.213	21.251	210
14	R†	21.927	22.095	566
15	R†	22.181	22.329	782
16	R†	22.694	22.966	1,466
17	R†	23.241	23.364	661
18	R†	23.637	24.043	2,063
19	L†	24.033	24.043	62
20	L†	24.048	24.056	50
21	R†	24.048	24.070	117
22	R†	24.124	24.217	507
23	R†	24.579	24.873	1,520
24	R†	24.874	25.000	706
25	R†	25.983	26.298	1,605
26	R†	26.443	26.649	1,094
27	R†	30.010	30.139	701
28	R†	30.910	30.950	242
29	R†	31.232	31.279	235
30	R†	31.559	31.661	516
31	R†	31.673	31.728	290
32	R†	31.886	31.926	190
33	R†	32.858	32.873	75
34	L†	32.874	32.884	53
35	R†	32.923	32.934	40
36	L†	32.934	32.949	78
37	R†	36.614	36.627	64
38	L†	36.619	36.631	64
39	R†	36.632	36.644	64
40	L†	36.637	36.649	64
41	R†	36.944	36.976	165
42	L†	36.952	36.972	106
43	R†	37.092	37.104	64
44	L†	37.094	37.107	64
45	R†	37.109	37.120	64
46	L†	37.111	37.121	50
			TOTAL	22,201

* POST MILE LOCATIONS ARE APPROXIMATE.

SUMMARY OF QUANTITIES

Q-2

STATE OF CALIFORNIA - DEPARTMENT OF TRANSPORTATION
DIVISION OF ENGINEERING
FUNCTIONAL SUPERVISOR: DOUGLAS S. JONES
CALCULATED-DESIGNED BY
CHECKED BY
REVISED BY
DATE REVISED

LAST REVISION DATE PLOTTED => 10-AUG-2011
02-03-11 TIME PLOTTED => 10:06

BORDER LAST REVISED 7/2/2010
USERNAME => s134507
DGN FILE => 0300020118pa002.dgn
RELATIVE BORDER SCALE IS IN INCHES 0 1 2 3
UNIT 0307
PROJECT NUMBER & PHASE 03000201181

Dist	COUNTY	ROUTE	POST MILES TOTAL PROJECT	SHEET No.	TOTAL SHEETS
03	Sie	49	16.9/41.4	18	31

Douglas S. Jones 6-6-11
REGISTERED CIVIL ENGINEER DATE

6-28-11
PLANS APPROVAL DATE

REGISTERED PROFESSIONAL ENGINEER — DOUGLAS S. JONES No. C42337 Exp. 03-31-12 CIVIL — STATE OF CALIFORNIA

THE STATE OF CALIFORNIA OR ITS OFFICERS OR AGENTS SHALL NOT BE RESPONSIBLE FOR THE ACCURACY OR COMPLETENESS OF SCANNED COPIES OF THIS PLAN SHEET.

PLACE HOT MIX ASPHALT DIKE

MBGR #	POST MILE TO POST MILE			TYPE A QUANTITY		TYPE C QUANTITY		TYPE E QUANTITY		TYPE F QUANTITY	
				LF	TON *	LF	TON *	LF	TON *	LF	TON *
-	R†	17.164	17.177					68.64	2.2		
01	R†	18.010	18.019			50.00	0.5				
01	R†	18.015	18.050							161.20	2.7
-	R†	18.805	18.696					480.48	15.6		
-	R†	18.893	18.921					147.84	4.8		
10	R†	20.070	20.098							147.84	2.4
10	R†	20.098	20.120			25.00	0.2				
-	L†	20.183	20.207	129.15	4.4						
11	R†	20.195	20.200			25.00	0.2				
11	R†	20.200	20.229							152.73	2.5
16	R†	22.747	22.799							272.98	4.5
18	R†	23.833	23.898							343.20	5.7
24	R†	24.887	24.950							401.28	6.6
-	R†	29.110	29.130					105.60	3.4		
-	R†	29.830	29.857					142.56	4.6		
-	L†	29.843	29.930	459.36	15.5						
-	L†	29.942	29.999	300.96	10.2						
-	L†	30.070	30.110	211.20	7.2						
-	L†	30.123	30.184	322.08	10.9						
-	R†	30.216	30.290					390.72	12.7		
-	L†	30.305	30.391	454.08	15.4						
-	L†	30.397	30.730	1,758.24	59.4						
-	R†	30.428	30.559					691.68	22.5		
-	R†	30.594	30.709					607.20	19.7		
-	R†	30.710	30.836					665.28	21.6		
-	L†	30.749	30.779	158.40	5.4						
-	L†	30.784	30.890	559.68	18.9						
-	L†	30.900	31.010	580.80	19.6						
29	R†	31.186	31.227							217.88	7.1
29	R†	31.227	31.241			75.00	0.8				
29	R†	31.241	31.279							198.16	3.3
29	R†	31.279	31.284			25.00	0.2				
-	R†	31.284	31.438					814.52	26.5		
-	L†	31.282	31.671	2,053.93	69.4						
31	R†	31.663	31.682			102.80	1.0				
31	R†	31.682	31.728							240.40	4.0
-	L†	31.671	31.728	300.96	10.2						
-	R†	31.728	31.842					601.92	19.6		
-	L†	31.845	31.916					374.88	12.2		
-	L†	31.916	32.010	496.32	16.8						
-	R†	31.999	32.126					670.56	21.8		
-	R†	32.142	32.171					153.12	5.0		
-	R†	32.180	32.358					939.84	30.5		
-	L†	32.181	32.193	63.36	2.2						
-	L†	32.195	32.213	95.04	3.3						
-	L†	32.361	32.570	1,103.52	37.3						
-	R†	32.540	32.640					528.00	17.2		
-	L†	32.580	32.818	1,256.64	42.5						
-	R†	32.816	32.853					196.76	6.4		
-	L†	32.826	32.869					228.44	7.5		
33	R†	32.853	32.867			75.00	0.8				
33	R†	32.867	32.873							29.20	0.5
33	R†	32.869	32.883			75.00	0.8				
34	L†	32.869	32.883			75.00	0.8				
34	L†	32.883	32.884							2.80	0.1
35	R†	32.923	32.925							8.08	0.1
35	R†	32.925	32.939			75.00	0.8				
			SUBTOTAL (1)	10,303.71	348.6	602.80	6.1	7,808.04	253.8	2,175.75	39.5

PLACE HOT MIX ASPHALT DIKE

MBGR #	POST MILE TO POST MILE			TYPE A QUANTITY		TYPE C QUANTITY		TYPE E QUANTITY		TYPE F QUANTITY	
				LF	TON *	LF	TON *	LF	TON *	LF	TON *
-	R†	32.939	32.562					3,290.84	107.0		
36	L†	32.934	32.940							29.20	0.5
36	L†	32.940	32.954			75.00	0.8				
-	L†	33.218	33.371					805.50	26.2		
-	L†	33.386	33.448	327.36	11.1						
-	L†	33.478	33.517					206.30	6.8		
-	L†	33.517	33.950					2,001.12	66.0		
-	L†	33.990	34.115	660.00	22.3						
-	L†	34.200	34.263					332.64	10.9		
-	R†	34.236	34.286					300.00	8.6		
-	R†	34.308	34.325					89.76	13.8		
-	R†	38.560	38.640					422.40	3.7		
-	R†	38.855	39.142					1,515.36	49.2		
-	R†	39.299	39.347					253.44	8.2		
-	R†	39.371	39.519					781.44	25.4		
-	R†	39.603	39.729					665.28	21.6		
-	R†	39.848	39.939					480.48	15.6		
-	R†	40.006	40.066					316.80	10.3		
-	R†	40.132	40.172					211.20	6.9		
-	R†	40.462	40.514					274.56	8.9		
-	R†	40.662	40.807					765.60	24.9		
			SUBTOTAL (2)	987.36	33.4	75.00	0.8	12,712.72	414.0	29.20	0.5
			SUBTOTAL (1)	10,303.71	348.6	602.80	6.1	7,808.04	253.8	2,175.75	39.5
			TOTAL	11,291.07	382.0	677.80	6.9	20,520.76	667.8	2,204.95	40.0

* QUANTITY IS INCLUDED IN THE ROADWAY QUANTITIES SUMMARY TABLE, THIS SHEET.

ROADWAY QUANTITIES SUMMARY

LOCATION	COLD FOAM IN-PLACE RECYCLING	HOT MIX ASPHALT	STABILIZING AGENT (FOAMED ASPHALT)	STABILIZING AGENT (CEMENTITIOUS MATERIAL)	TACK COAT	ASPHALTIC EMULSION
	SQYD	TON	TON	TON	TON	TON
16.88 41.06 +	400,000	75,137	5,886	3,924	141	300
COUNTY ROADS & DRIVEWAYS	0	3296	0	0	0	
HMA DIKE *	0	1097	0	0	0	
OVERSIDE DRAIN **	0	92	0	0	0	
PAVED DITCH a	0	124	0	0	0	
PAVED DITCH(SIERRA CITY) b	0	52	0	0	0	
SIERRA CITY SHOULDERS c	0	907	0	0	0	
TOTAL	400,000	80,705	5,886	3,924	141	300

+ POST MILE TO POST MILE.
* SEE THIS SHEET FOR PLACE HOT MIX ASPHALT DIKE.
** SEE Q-4 FOR PLACE ASPHALT CONCRETE (MISCELLANEOUS AREA).
a SEE X-2 FOR PAVED DITCH LOCATIONS.
b SEE X-1 FOR PAVED DITCH LOCATION IN SIERRA CITY.
c "SIERRA CITY SHOULDERS" INCLUDES QUANTITY TO PAVE VARIOUS WIDTHS AND LOCATIONS OF BUSNESS PARKING/ACCESSES, COUNTY/TOWN ROADS AND PUBLIC/PRIVATE DRIVEWAYS. THESE LOCATIONS AND WIDTHS ARE TO BE DETERMINED BY THE ENGINEER.

SUMMARY OF QUANTITIES

Q-3

CALCULATED-DESIGNED BY: MELISSA L. HAURY
CHECKED BY: DOUGLAS S. JONES
FUNCTIONAL SUPERVISOR
REVISED BY
DATE REVISED: 02/14/11

STATE OF CALIFORNIA - DEPARTMENT OF TRANSPORTATION
DIVISION OF ENGINEERING

LAST REVISION | DATE PLOTTED => 10-AUG-2011 | TIME PLOTTED => 10:06
02-14-11

BORDER LAST REVISED 7/2/2010 | USERNAME => s134507 | DGN FILE => 0300020118pa003.dgn | RELATIVE BORDER SCALE IS IN INCHES 0 1 2 3 | UNIT 0307 | PROJECT NUMBER & PHASE 03000201181

Dist	COUNTY	ROUTE	POST MILES TOTAL PROJECT	SHEET No.	TOTAL SHEETS
03	Sie	49	16.9/41.4	19	31

Douglas S. Jones 6-6-11
REGISTERED CIVIL ENGINEER DATE

6-28-11
PLANS APPROVAL DATE

DOUGLAS S. JONES No. C42337 Exp. 03-31-12 CIVIL — REGISTERED PROFESSIONAL ENGINEER — STATE OF CALIFORNIA

THE STATE OF CALIFORNIA OR ITS OFFICERS OR AGENTS SHALL NOT BE RESPONSIBLE FOR THE ACCURACY OR COMPLETENESS OF SCANNED COPIES OF THIS PLAN SHEET.

COLD PLANE AC PAVEMENT

SIDE ROADS AND DRIVEWAYS LOCATION*				QTY
L†/R†	POST MILE TO POST MILE		DESCRIPTION	SQYD
R†	16.88	16.91	PEZZOLA	50
L†	16.92	16.97	BELLE	135
L†	16.95	16.99	BELLE	30
L†	17.10	17.12	BELLE	13
L†	17.53	17.55	Dwy	13
R†	17.68	17.70	Dwy TO LURE	13
R†	19.58	19.60	Dwy TO SANGRI-LA	33
L†	19.75	19.78	Maint Sta	63
R†	19.98	20.00	Dwy	28
R†	20.28	20.30	Dwy	38
R†	21.64	21.65	Dwy	20
R†	22.49	22.52	UNION FLAT CAMPGROUND	40
L†	22.55	22.60	FOREST Rte 93	125
R†	22.60	22.68	Dwy	88
L†	23.19	23.22	Dwy	30
L†	23.23	23.24	Dwy	20
R†	23.35	23.38	Dwy	78
L†	23.42	23.44	Dwy	68
R†	23.42	23.44	Dwy	48
R†	23.47	23.50	Dwy	60
L†	23.87	23.88	Dwy	60
L†	24.07	24.10	Dwy	35
L†	25.16	25.20	Dwy	18
L†	25.22	25.23	Dwy	25
L†	25.27	25.31	Dwy	20
L†	25.36	25.37	Dwy	25
R†	25.37	25.40	Dwy	58
R†	25.53	25.56	Dwy	45
L†	25.56	25.59	Dwy	73
R†	26.39	26.40	Dwy	10
R†	26.73	26.75	Dwy	25
R†	27.30	27.25	Dwy	100
L†	27.32	27.34	LOGANVILLE Ln	40
L†	27.69	27.74	LOGANVILLE CAMPGROUND	85
R†	27.67	27.71	LOGANVILLE CAMPGROUND	105
R†	27.85	27.86	Dwy	23
L†	28.75	28.76	Dwy	30
R†	28.79	28.80	Dwy	20
L†	28.80	28.81	Dwy	10
R†	28.82	28.84	Dwy (DOUBLE)	45
L†	28.86	28.87	Dwy	18
L†	28.88	28.88	Dwy	23
R†	28.88	28.88	Dwy	15
L†	28.89	28.90	Dwy	20
L†	28.91	28.92	Dwy	23
R†	28.91	28.93	Dwy	25
L†	28.94	28.96	Dwy	110
L†	29.00	29.02	Dwy	25
L†/R†	29.15	29.70	SIERRA CITY SHOULDERS [a]	6,453
R†	29.77	29.79	WILD PLUM Rd	85
L†	30.20	30.24	SIERRA PARK MUSEUM	63
R†	30.26	30.32	NEVADA Dr	113
R†	30.55	30.60	LEWIS Ln	80
L†	30.73	30.75	PACIFIC CREST TRAILHEAD	58
R†	32.11	32.13	Dwy	73
R†	32.15	32.16	Dwy	33
L†	32.21	32.23	REST AREA (SOUTH END)	68
L†	32.30	32.34	REST AREA (NORTH END)	93
			SUBTOTAL (1)	9,223

COLD PLANE AC PAVEMENT (CONTINUED)

SIDE ROADS AND DRIVEWAYS LOCATION*				QTY
L†/R†	POST MILE TO POST MILE		DESCRIPTION	SQYD
L†	32.53	32.58	BIG SPRINGS Rd	103
R†	32.63	32.67	Dwy	33
L†	32.78	32.83	SALMON CREEK Rd	100
R†	33.14	33.16	Dwy	58
L†	33.17	33.19	Dwy	53
R†	33.32	33.35	Dwy	180
L†	33.34	33.38	OLD GOLD LAKE Rd	58
L†	33.44	33.48	Dwy	38
L†	33.54	33.56	Dwy	35
R†	34.15	34.17	Dwy	33
L†	34.24	34.29	GOLD LAKE Rd	68
R†	34.24	34.29	GREEN Rd	83
L†	34.39	34.40	Dwy	25
L†	34.47	34.47	Dwy	15
L†	34.81	34.83	Dwy	35
R†	35.12	35.15	Dwy	48
R†	35.21	35.22	Dwy	23
R†	35.38	35.40	Dwy	100
R†	35.41	35.44	SAN FRANCISCO	103
L†	35.47	35.48	STATE FIELD CAMPUS CARVIN CREEK	33
L†	35.84	35.85	HOMESITES Dwy	25
L†	35.90	35.90	Dwy	13
R†	35.94	35.98	Dwy	18
R†	36.24	36.27	Dwy	20
R†	36.48	36.49	Dwy	18
L†	36.61	36.63	Dwy	38
L†	36.62	36.62	HASKELL CREEK Rd	18
R†	36.74	36.81	Dwy	60
R†	36.82	36.83	Dwy	25
L†	37.29	37.32	Dwy	28
L†	37.63	37.66	Dwy	40
R†	38.65	38.68	Dwy	90
L†	38.76	38.79	Dwy	45
L†	39.98	40.04	CHAPMAN SADDLE Rd	100
R†	40.42	40.44	Dwy	25
L†	41.06	41.09	YUBA PASS	100
R†	41.06	41.11	CAMPGROUND YUBA PASS	173
			SUBTOTAL (2)	2,060
			SUBTOTAL (1)	9,223
			(SIDE ROADS & DRIVEWAYS) TOTAL	11,283
SIERRA CITY [b]				
L†/R†	29.20	29.70	SIERRA CITY	6,013
			(SIERRA CITY) TOTAL	6,013
CONFORMS [c]				
16.90		16.91	BEGIN PROJECT (DOWNIEVILLE)	121
PM 24.03 [d]			LADIES CANYON Br No. 13-0006	241
PM 32.90 [d]			SALMON CREEK Br No. 13-0007	241
41.39		41.40	END PRJECT (YUBA PASS)	121
29.14		29.15	SIERRA CITY BEGIN	117
29.70		29.71	SIERRA CITY END	117
19.80		19.81	ROCK WALL AREA	141
19.98		19.99	ROCK WALL AREA	141
			(CONFORMS) TOTAL	1,240
(SIDE ROADS & DRIVEWAYS + SIERRA CITY + CONFORMS) TOTAL				18,536

* POST MILE LOCATIONS ARE APPROXIMATE.
a "SIERRA CITY SHOULDERS" INCLUDES VARIOUS WIDTHS AND LOCATIONS OF BUSNESS PARKING/ACCESSES, COUNTY/TOWN ROADS AND PUBLIC/PRIVATE DRIVEWAYS. THESE LOCATIONS AND WIDTHS ARE TO BE DETERMINED BY THE ENGINEER.
b SEE X-1 FOR SIERRA CITY COLD PLANE LIMITS AND SHEET C-3 FOR CONFORM DETAILS.
c SEE C-3 AND C-4 FOR CONFORMS.
d QUANTITY INCLUDES APPROACH AND DEPARTURE.

AC OVERSIDE DRAINS

LOCATION* (POST MILE)		PLACE HOT MIX ASPHALT CONCRETE (MISCELLANEOUS AREA)	
		SQYD	TON **
R†	30.290	2.28	1.4
L†	30.325	4.00	2.5
L†	30.394	4.00	2.5
L†	30.503	4.00	2.5
L†	30.590	4.00	2.5
R†	30.594	2.28	1.4
L†	30.702	4.00	2.5
R†	30.709	2.28	1.4
R†	30.742	4.00	2.5
L†	30.781	4.00	2.5
L†	30.895	4.00	2.5
L†	31.320	4.00	2.5
L†	31.500	4.00	2.5
L†	31.633	4.00	2.5
R†	31.633	2.28	1.4
R†	31.740	2.28	1.4
L†	31.857	4.00	2.5
R†	32.217	4.00	2.5
L†	32.511	4.00	2.5
L†	32.662	4.00	2.5
R†	32.816	2.28	1.4
R†	33.005	4.00	2.5
R†	33.190	4.00	2.5
R†	33.367	4.00	2.5
R†	33.680	2.28	1.4
R†	33.790	2.28	1.4
L†	34.017	4.00	2.5
L†	34.200	4.00	2.5
R†	34.236	2.28	1.4
R†	38.560	2.28	1.4
R†	38.912	2.28	1.4
R†	38.969	2.28	1.4
R†	39.005	2.28	1.4
R†	39.056	2.28	1.4
R†	39.105	2.28	1.4
R†	39.299	4.00	2.5
R†	39.371	2.28	1.4
R†	39.473	2.28	1.4
R†	39.498	2.28	1.4
R†	39.605	2.28	1.4
R†	39.634	2.28	1.4
R†	39.848	4.00	2.5
R†	39.872	2.28	1.4
R†	40.132	2.28	1.4
R†	40.462	2.28	1.4
R†	40.662	2.28	1.4
R†	40.722	2.28	1.4
R†	40.752	2.28	1.4
TOTAL		147.28	91.4

** SEE Q-3, ROADWAY QUANTITES SUMMARY

IMPORTED MATERIAL (SHOULDER BACKING)

*POST MILE TO POST MILE			TON
R†	16.91	41.10	3592
L†	16.91	41.10	3592
		TOTAL	

* ALL MAINLINE, COUNTY ROADS AND DRIVEWAYS REQUIRING IMPORTED MATERIAL (SHOULDER BACKING)

ADJUST FRAME AND GRATE TO GRADE

LOCATION*	QTY EA
PM 29.17 TO PM 29.22	4
TOTAL	4

* FOUR LOCATIONS TO BE ADJUSTED IN THE POST MILE LIMITS

REMOVE CONCRETE*

LOCATION			QTY CY
L†	PM 29.17	TO PM 29.22	20
		TOTAL	20

* REMOVE TOP 0.50' OF THE CONCRETE GUTTER IN SIERRA CITY.

SUMMARY OF QUANTITIES

Q-4

REVISED BY | DATE REVISED
MELISSA L. HAURY
CALCULATED-DESIGNED BY | CHECKED BY
FUNCTIONAL SUPERVISOR
DOUGLAS S. JONES
STATE OF CALIFORNIA - DEPARTMENT OF TRANSPORTATION
Caltrans DIVISION OF ENGINEERING

LAST REVISION | DATE PLOTTED => 10-AUG-2011
02-15-11 | TIME PLOTTED => 10:06

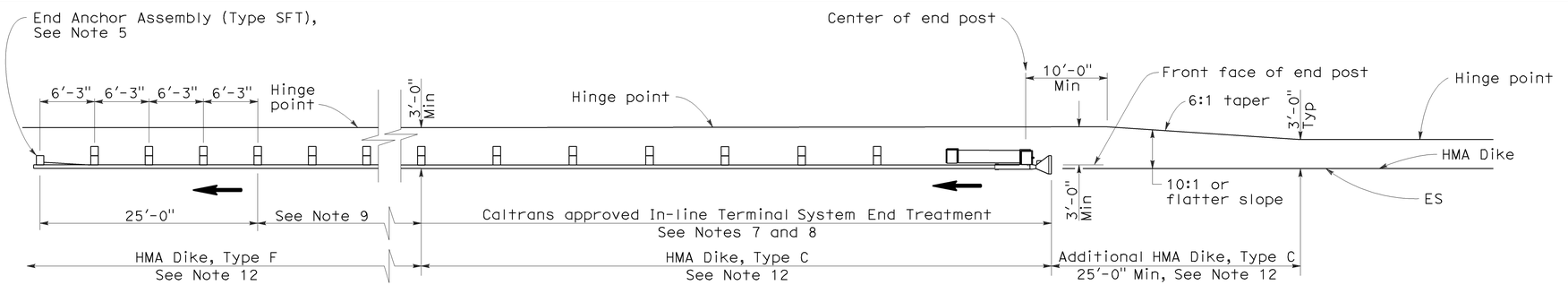

TYPE 11A LAYOUT

(EMBANKMENT GUARD INSTALLATION WITH IN-LINE END TREATMENT AT TRAFFIC APPROACH END OF RAILING)
See Note 6

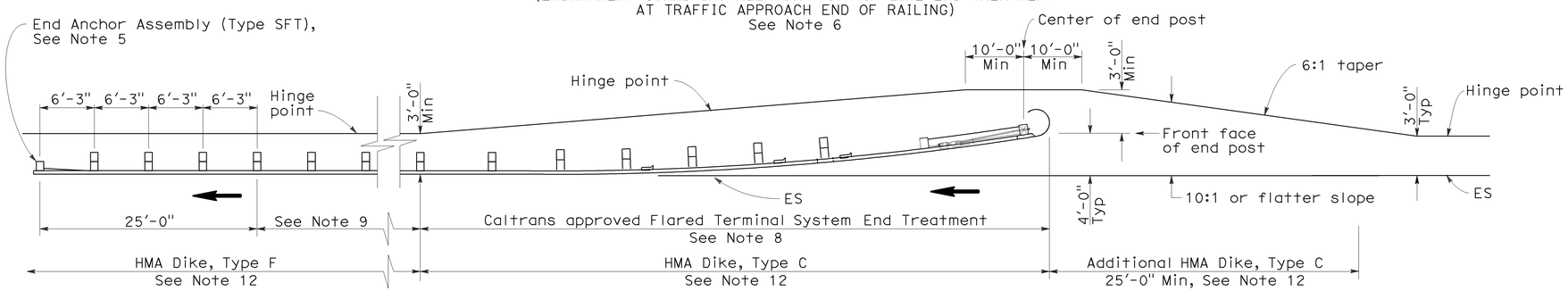

TYPE 11B LAYOUT

(EMBANKMENT GUARD RAILING INSTALLATION WITH FLARED END TREATMENT AT TRAFFIC APPROACH END OF RAILING)
See Note 6

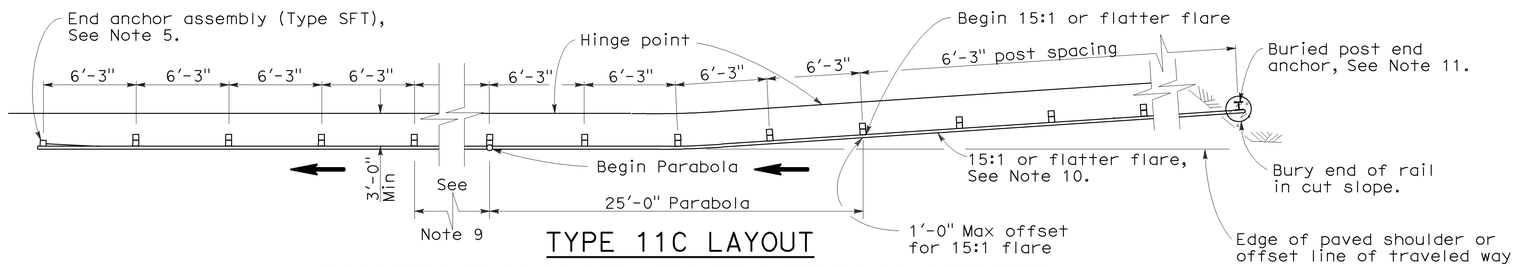

TYPE 11C LAYOUT

(EMBANKMENT GUARD RAILING INSTALLATION WITH BURIED END ANCHOR TREATMENT AT TRAFFIC APPROACH END OF RAILING)
See Notes 6 and 12

NOTES:

1. Line post, blocks and hardware to be used are shown on Standard Plans A77A1, A77A2, A77B1, A77C1, and A77C2.
2. Guard rail post spacing to be 6'-3" center to center, except as otherwise noted.
3. Except as noted, line posts are 6" x 8" x 6'-0" wood with 6" x 8" x 1'-2" wood blocks. W6 x 9 steel posts, 6'-0" in length, with 6" x 8" x 1'-2" notched wood blocks or recycled plastic blocks may be used for 6" x 8" x 6'-0" wood post with 6" x 8" x 1'-2" wood blocks where applicable and when specified.
4. Direction of adjacent traffic indicated by ➞.
5. For End Anchor Assembly (Type SFT) details, see Standard Plan A77H1.
6. Layout Types 11A, 11B or 11C are typically used where guard railing is recommended to shield embankment slopes and a crashworthy end treatment is required for only one direction of traffic.
7. In-line Terminal System End Treatments are used where site conditions will not accommodate a flared end treatment.
8. The type of terminal system end treatment to be used will be shown on the Project Plans.
9. Dependent on site conditions (embankment height and side slope), construction of additional guard railing (length equal to multiples of 12'-6" with 6'-3" post spacing) may be advisable.
10. The 15:1 or flatter flare used with buried end anchors is based on the edge of the paved shoulder or offset line of edge of the traveled way. The length of guard railing within the 15:1 or flatter flare is based on site conditions and should be a length equal to multiples of 12'-6".
11. For details of the buried post end anchor used with Type 11C Layout, see Standard Plan A77I2.
12. Where placement of dike is required with guard railing installations, see Revised Standard Plan RSP A77C4 for dike positioning details.

DIST	COUNTY	ROUTE	POST MILES TOTAL PROJECT	SHEET NO.	TOTAL SHEETS
03	Sie	49	16.9/41.4	20	31

Randell D. Hiatt
REGISTERED CIVIL ENGINEER

June 6, 2008
PLANS APPROVAL DATE

REGISTERED PROFESSIONAL ENGINEER — Randell D. Hiatt — No. C50200 — Exp. 6-30-09 — CIVIL — STATE OF CALIFORNIA

The State of California or its officers or agents shall not be responsible for the accuracy or completeness of electronic copies of this plan sheet.

To accompany plans dated 6-28-11

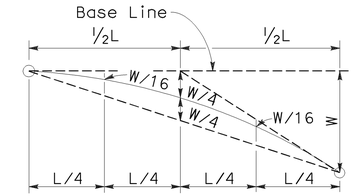

TYPICAL PARABOLIC LAYOUT

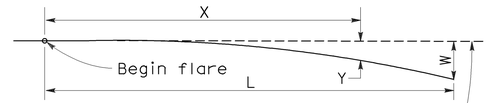

$$Y = \frac{WX^2}{L^2}$$

Y = Offset from base line
W = Maximum offset
X = Distance along base line
L = Length of flare

PARABOLIC FLARE OFFSETS

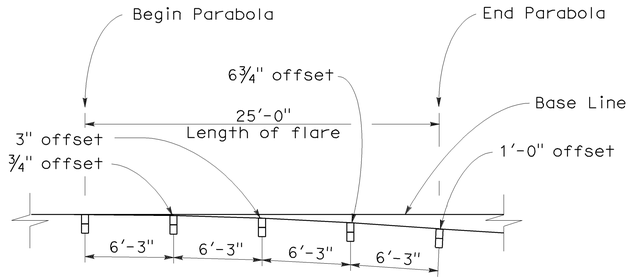

TYPICAL FLARE OFFSETS FOR 1 FOOT MAX END OFFSET

STATE OF CALIFORNIA
DEPARTMENT OF TRANSPORTATION

METAL BEAM GUARD RAILING TYPICAL LAYOUTS FOR EMBANKMENTS

NO SCALE

RSP A77E1 DATED JUNE 6, 2008 SUPERSEDES STANDARD PLAN A77E1
DATED MAY 1, 2006 - PAGE 48 OF THE STANDARD PLANS BOOK DATED MAY 2006.

REVISED STANDARD PLAN RSP A77E1

2006 REVISED STANDARD PLAN RSP A77E1

12-10-07

DIST	COUNTY	ROUTE	POST MILES TOTAL PROJECT	SHEET NO.	TOTAL SHEETS
03	Sie	49	16.9/41.4	21	31

Randell D. Hiatt
REGISTERED CIVIL ENGINEER

June 6, 2008
PLANS APPROVAL DATE

REGISTERED PROFESSIONAL ENGINEER — Randell D. Hiatt — No. C50200 — Exp. 6-30-09 — CIVIL — STATE OF CALIFORNIA

The State of California or its officers or agents shall not be responsible for the accuracy or completeness of electronic copies of this plan sheet.

To accompany plans dated 6-28-11

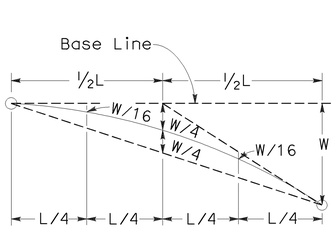

TYPICAL PARABOLIC LAYOUT

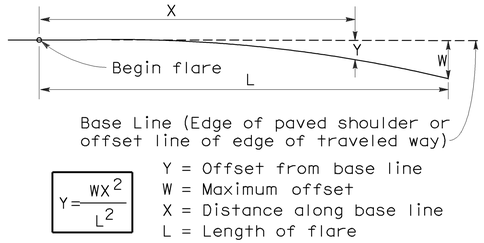

$$Y = \frac{WX^2}{L^2}$$

Y = Offset from base line
W = Maximum offset
X = Distance along base line
L = Length of flare

PARABOLIC FLARE OFFSETS

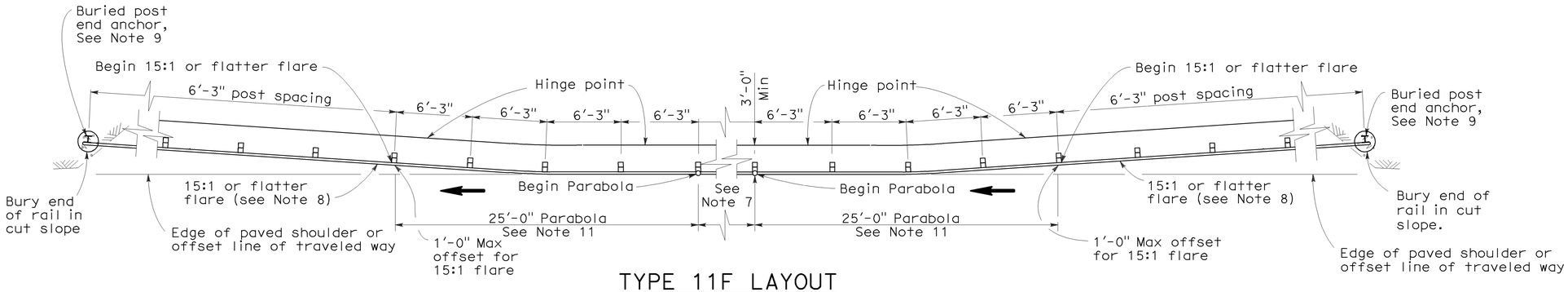

TYPE 11F LAYOUT

(EMBANKMENT GUARD RAILING INSTALLATION WITH A BURIED END ANCHOR TREATMENT AT EACH END OF RAILING)
See Notes 5 and 10

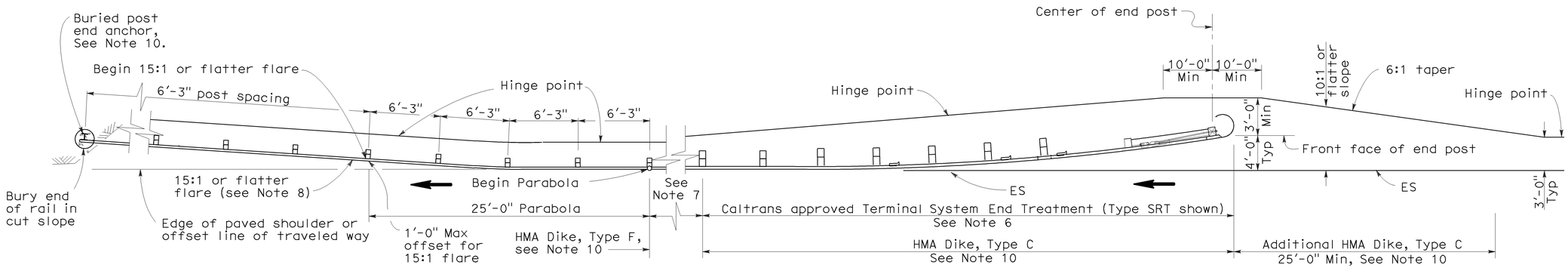

TYPE 11G LAYOUT

(EMBANKMENT GUARD RAILING INSTALLATION WITH FLARED END TREATMENT AND A BURIED END ANCHOR TREATMENT AT THE ENDS OF RAILING)
See Notes 5 and 10

NOTES:

1. Line post, blocks and hardware to be used are shown on Standard Plans A77A1, A77A2, A77B1, A77C1 and A77C2.
2. Guard rail post spacing to be 6'-3" center to center, except as otherwise noted.
3. Except as noted, line posts are 6" x 8" x 6'-0" wood with 6" x 8" x 1'-2" wood blocks. W6 x 9 steel posts, 6'-0" in length, with 6" x 8" x 1'-2" notched wood blocks or plastic blocks may be used for 6" x 8" x 6'-0" wood post with 6" x 8" x 1'-2" wood blocks where applicable and when specified.
4. Direction of adjacent traffic indicated by ⟶.
5. Layout Types 11D through 11L, shown on the A77E Series of Revised Standard Plans, are typically used where guard railing is recommended to shield embankment slopes and a crashworthy end treatment is required for both directions of traffic.
6. The type of terminal system end treatment to be used will be shown on the Project Plans.
7. Dependent on site conditions (embankment height and side slope), construction of additional guard railing (length equal to multiples of 12'-6" with 6'-3" post spacing) may be advisable.
8. The 15:1 or flatter flare used with buried end anchors is based on the edge of the paved shoulder or offset line of edge of the traveled way. The length of guard railing within the 15:1 or flatter flare is based on site conditions and should be a length equal to multiples of 12'-6".
9. For details of the buried post end anchor used with Type 11F and 11G Layouts, see Standard Plan A77I2.
10. Where placement of dike is required with guard railing installations, see Revised Standard Plan RSP A77C4 for dike positioning details.
11. For typical flare offsets for 25'-0" length parabola with maximum offset of 1'-0", see Revised Standard Plan RSP A77E1.

STATE OF CALIFORNIA
DEPARTMENT OF TRANSPORTATION

METAL BEAM GUARD RAILING TYPICAL LAYOUTS FOR EMBANKMENTS

NO SCALE

RSP A77E3 DATED JUNE 6, 2008 SUPERSEDES STANDARD PLAN A77E3
DATED MAY 1, 2006 - PAGE 50 OF THE STANDARD PLANS BOOK DATED MAY 2006.

REVISED STANDARD PLAN RSP A77E3

2006 REVISED STANDARD PLAN RSP A77E3

12-10-07

Dist	COUNTY	ROUTE	POST MILES TOTAL PROJECT	SHEET No.	TOTAL SHEETS
03	Sie	49	16.9/41.4	22	31

Randell D. Hiatt
REGISTERED CIVIL ENGINEER

May 20, 2011
PLANS APPROVAL DATE

REGISTERED PROFESSIONAL ENGINEER — Randell D. Hiatt — No. C50200 — Exp. 6-30-11 — CIVIL — STATE OF CALIFORNIA

To accompany plans dated 6-28-11

The State of California or its officers or agents shall not be responsible for the accuracy or completeness of electronic copies of this plan sheet.

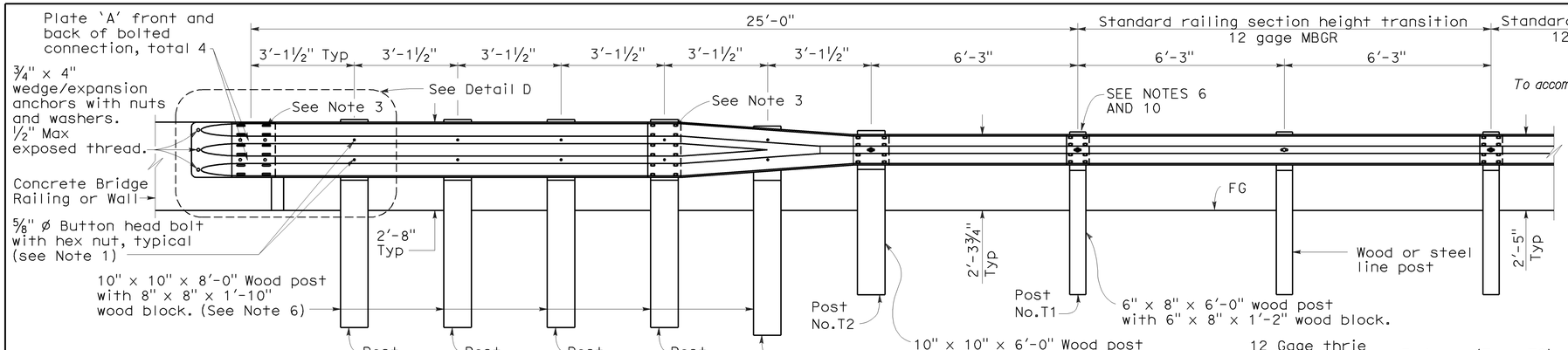

ELEVATION

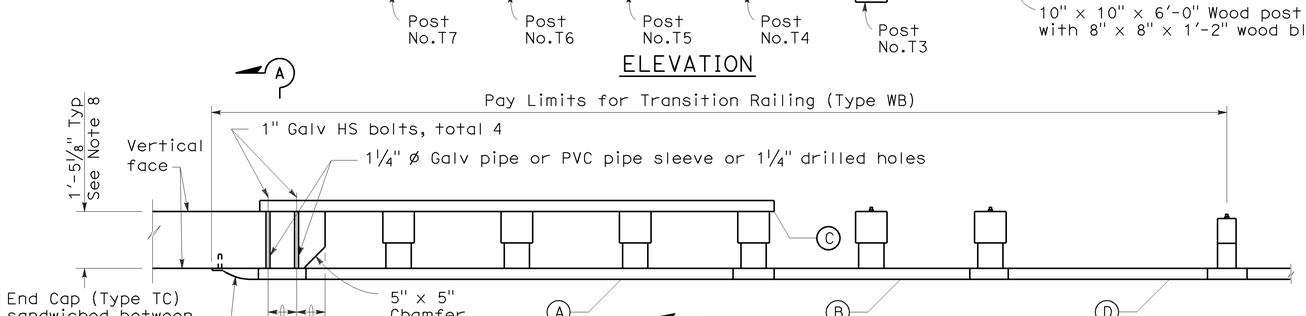

PLAN

TRANSITION RAILING (TYPE WB)

(No Blockout Attachment)

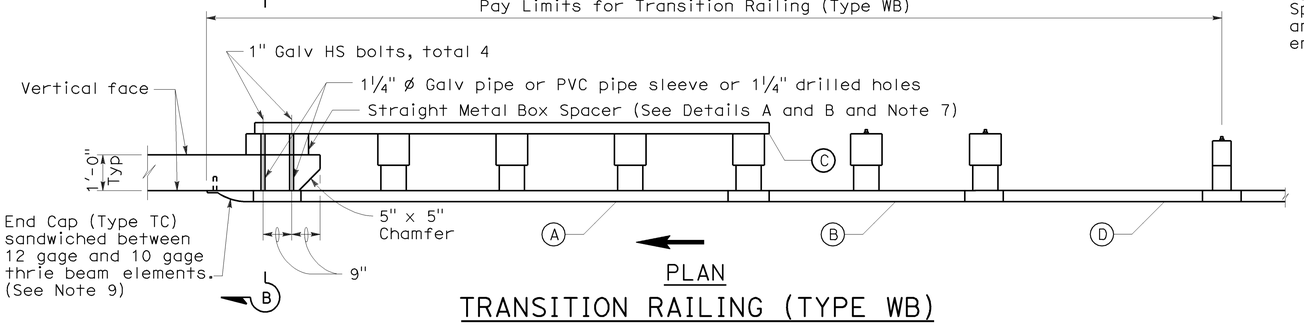

PLAN

TRANSITION RAILING (TYPE WB)

(Blockout Attachment)

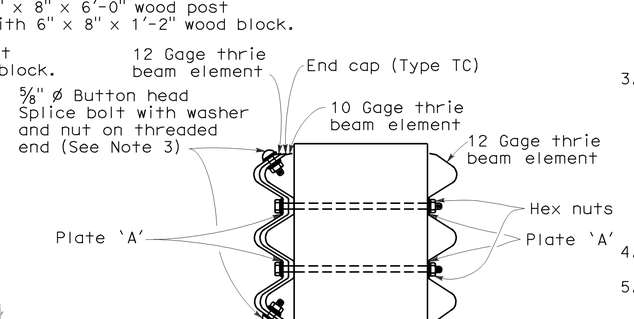

SECTION A-A

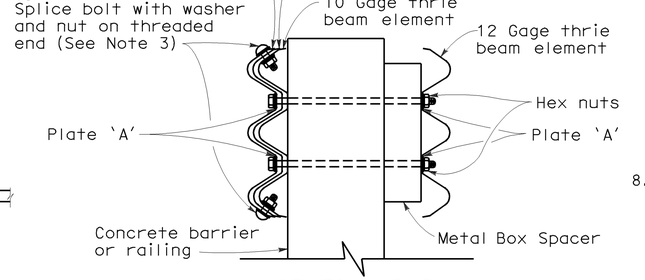

SECTION B-B

NOTES:

1. Use ⅝" ø Button head bolts and hex nuts for connections to posts. No washer on rail face for bolted connections to post.
2. The nested rail elements, end cap, and 'W' beam to thrie beam element may be spliced together prior to bolting the elements to the wood post and concrete barrier or railing.
3. Exterior splice bolt holes for rail element splices at Post No. T4 and the connection to the concrete barrier or railing shall be the standard 29/32" x 1⅛" slot size. Interior splice bolt holes at these locations may be increased up to 1¼" ø. Only the top 2 and the bottom 2 splice bolts with washers and nuts are required for rail splices at Post No. T4 and the connection to the concrete barrier or railing.
4. Direction of adjacent traffic indicated by ⟵.
5. The top elevation of Posts No. T2 through No. T7 shall not project more than 1" above the top elevation of the rail element.
6. Typically, the railing connected to Transition Railing (Type WB) will be either standard railing section of metal beam guard railing with height transition ratio of 120:1 or an approved Caltrans end treatment attached to Post No. T1.
7. The depth of the metal box spacer varies from the 5⅛" to 1½" and is dependent on the width of the concrete railing or wall. The combined dimension for the depth of the metal box spacer plus the width of railing or wall is typically 17⅞". Where the space between the backside of the concrete railing or wall and the rear thrie beam element is less than 1½", metal plates similar to Plate 'A' are to be used as spacers.
8. Where the width of the concrete railing or wall is greater than 17⅞", wood blocks are to be used to fill the space created between the backside of Posts No. T4 through No. T7 and the rear thrie beam element. These wood blocks shall be 8" in width and 1'-2" in length. The dimension between the front thrie beam element and the rear thrie beam element is to match the width of the concrete railing or wall.
9. End cap may be installed over 12 gage and 10 gage thrie beam elements where transition railing is installed on the departure end of bridge railing.
10. Conform standard railing section height to 2'-3¾" at Post No. T1 using height transition ratio of 120:1.

LEGEND

- (A) Nested thrie beam elements (one 12 gage element nested over one 10 gage element).
- (B) One 10 gage "W" beam to thrie beam element.
- (C) One 12 gage thrie beam element.
- (D) One 10 gage "W" beam rail element (7'-3½" length)

10 gage = 0.135" thick

12 gage = 0.108" thick

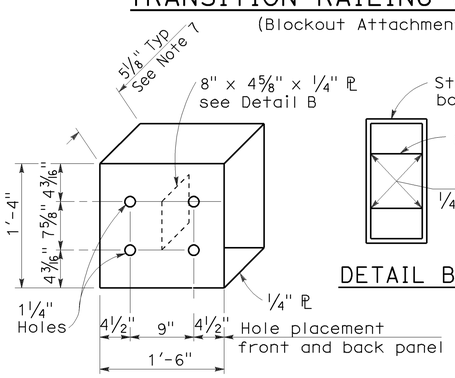

DETAIL A

STRAIGHT METAL BOX SPACER

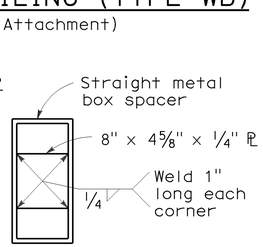

DETAIL B

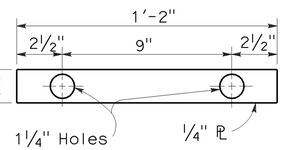

DETAIL C

PLATE 'A'

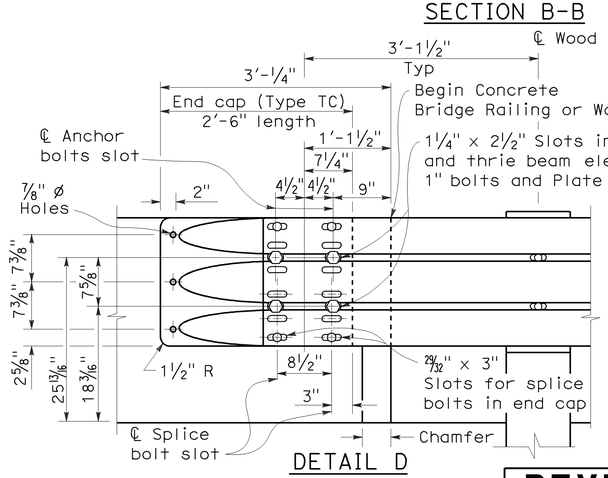

DETAIL D

STATE OF CALIFORNIA
DEPARTMENT OF TRANSPORTATION

METAL BEAM GUARD RAILING TRANSITION RAILING (TYPE WB)

NO SCALE

RSP A77J4 DATED MAY 20, 2011 SUPERSEDES
RSP A77J4 DATED JUNE 5, 2009, RSP A77J4 DATED JUNE 6, 2008
AND STANDARD PLAN A77J4 DATED MAY 1, 2006 -
PAGE 75 OF THE STANDARD PLANS BOOK DATED MAY 2006.

REVISED STANDARD PLAN RSP A77J4

2006 REVISED STANDARD PLAN RSP A77J4

5-14-09

DIST	COUNTY	ROUTE	POST MILES TOTAL PROJECT	SHEET NO.	TOTAL SHEETS
03	Sie	49	16.9/41.4	23	31

REGISTERED CIVIL ENGINEER

June 5, 2009
PLANS APPROVAL DATE

Glenn DeCou
No. C34547
Exp. 9-30-09
CIVIL
REGISTERED PROFESSIONAL ENGINEER
STATE OF CALIFORNIA

The State of California or its officers or agents shall not be responsible for the accuracy or completeness of electronic copies of this plan sheet.

To accompany plans dated 6-28-11

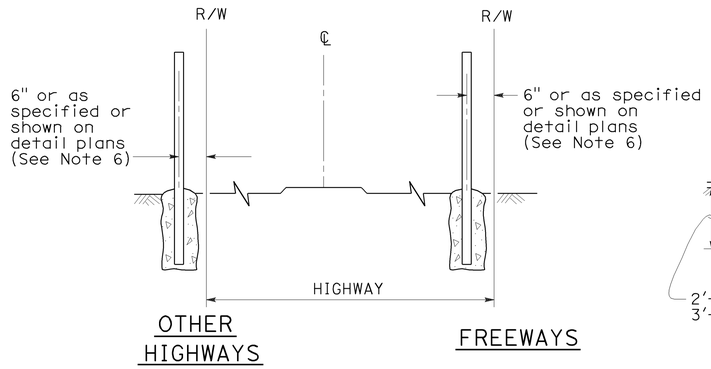

FENCE LOCATION

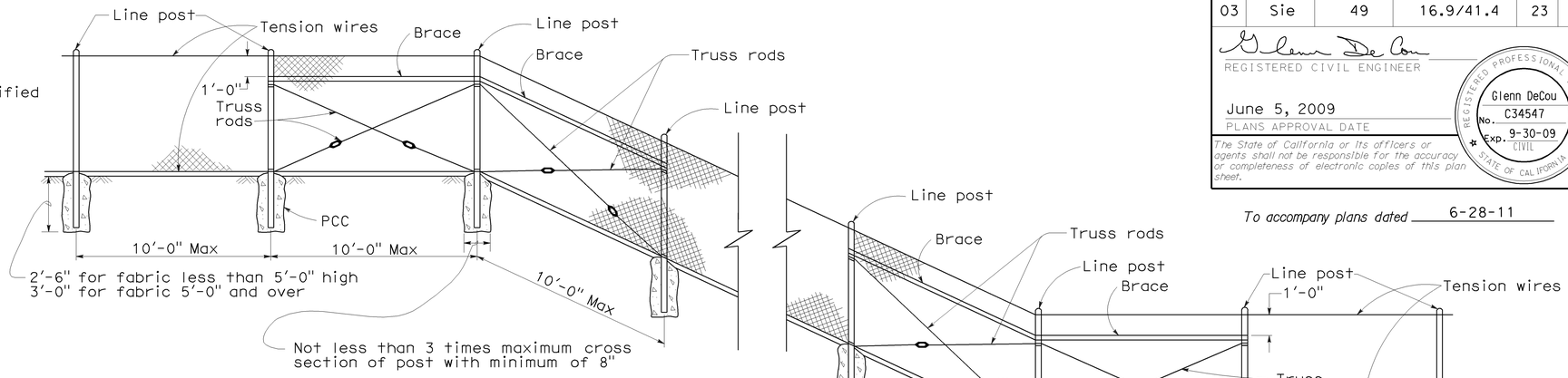

CHAIN LINK FENCE ON SHARP BREAK IN GRADE

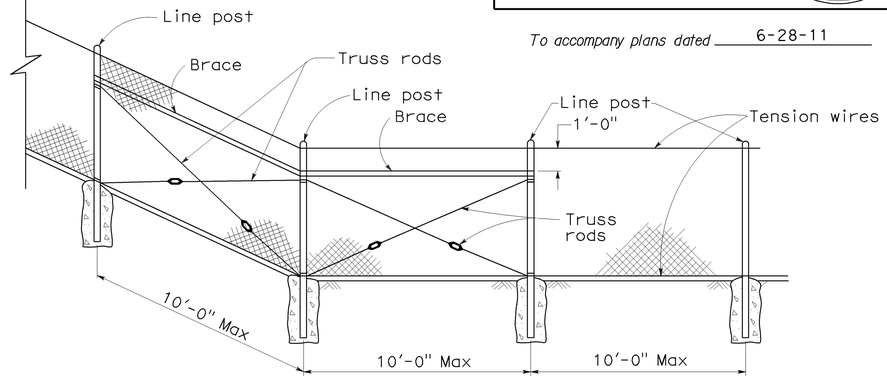

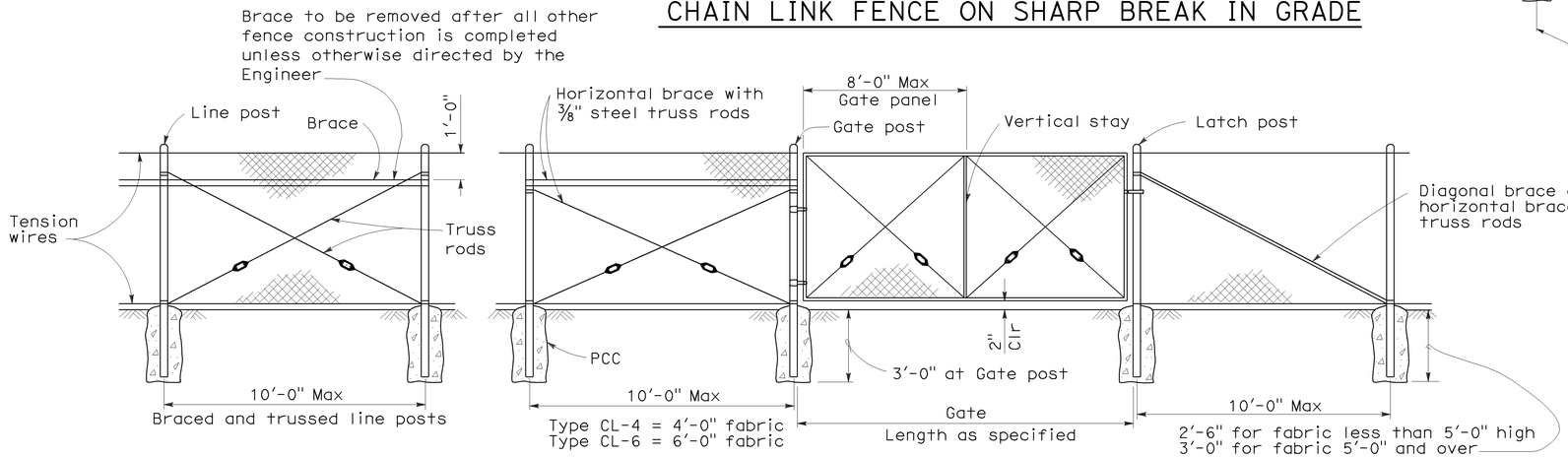

CHAIN LINK GATE INSTALLATION

GATE POST

FENCE HEIGHT	GATE WIDTHS	NOMINAL ID	WEIGHT PER FOOT
6'-0" and Less	Up thru 6'-0"	2½"	4.95 LB
	Over 6'-0" thru 12'-0"	4"	10.79 LB
	Over 12'-0" thru 18'-0"	5"	14.62 LB
	Over 18'-0" to 24'-0" Max	6"	18.97 LB
Over 6'-0"	Up thru 6'-0"	3"	7.58 LB
	Over 6'-0" thru 12'-0"	5"	14.62 LB
	Over 12'-0" thru 18'-0"	6"	18.97 LB
	Over 18'-0" to 24'-0" Max	8"	28.55 LB

Above post dimensions and weights are minimums. Larger sizes may be used on approval of the Engineer.

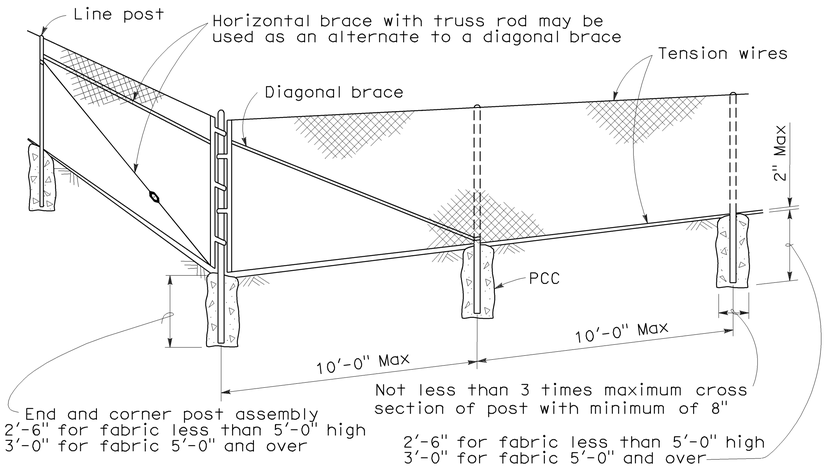

CORNER POST

NOTES:

1. The below table shows examples of post and brace sections which may comply with the Specifications.
2. Sections shown in the tables must also comply with the strength requirements and other provisions of the Specifications.
3. Other sections which comply with the strength requirements and other provisions of the Specifications may be used on approval of the Engineer.
4. Options exercised shall be uniform on any one project.
5. Dimensions shown are nominal.
6. Offset to be 2'-0" at monument locations, measured at right angles to R/W lines. Taper to achieve offset to be at least 20'-0" long.

TYPICAL MEMBER DIMENSIONS (See Notes)

FENCE HEIGHT	LINE POSTS			END, LATCH & CORNER POSTS			BRACES			
	ROUND ID	H	ROLL FORMED	ROUND ID	ROLL FORMED		ROUND ID	H	ROLL FORMED	
6' & less	1½"	1⅞" × 1⅝"	1⅞" × 1⅝"	2"	3½" × 3½"	2" × 1¾"	1¼"	1½" × 1⅝"	1⅝" × 1¼"	1¾" × 1¼"
Over 6'	2"	2¼" × 2"	2" × 1¾"	2½"	3½" × 3½"	2½" × 2½"	1¼"	1½" × 1⅝"	1⅝" × 1¼"	1¾" × 1¼"

STATE OF CALIFORNIA
DEPARTMENT OF TRANSPORTATION

CHAIN LINK FENCE

NO SCALE

RSP A85 DATED JUNE 5, 2009 SUPERSEDES STANDARD PLAN A85
DATED MAY 1, 2006 - PAGE 111 OF THE STANDARD PLANS BOOK DATED MAY 2006.

REVISED STANDARD PLAN RSP A85

2006 REVISED STANDARD PLAN RSP A85

5-7-09

DIST	COUNTY	ROUTE	POST MILES TOTAL PROJECT	SHEET NO.	TOTAL SHEETS
03	Sie	49	16.9/41.4	24	31

Randell D. Hiatt
REGISTERED CIVIL ENGINEER

June 6, 2008
PLANS APPROVAL DATE

Randell D. Hiatt
No. C50200
Exp. 6-30-09
CIVIL
REGISTERED PROFESSIONAL ENGINEER
STATE OF CALIFORNIA

The State of California or its officers or agents shall not be responsible for the accuracy or completeness of electronic copies of this plan sheet.

To accompany plans dated 6-28-11

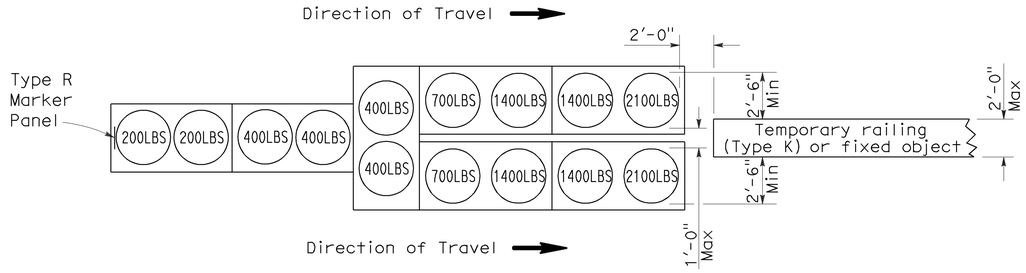

ARRAY 'TU14'

Approach speed 45 mph or more

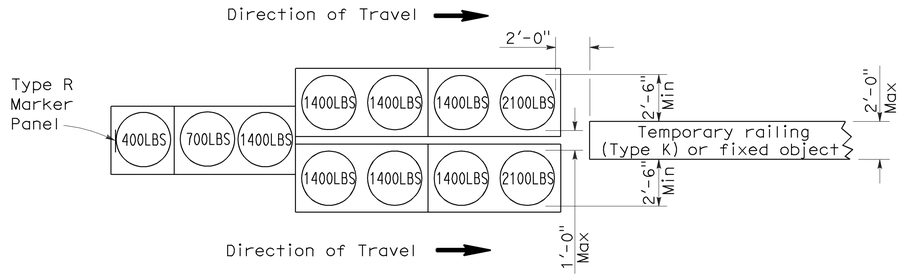

ARRAY 'TU11'

Approach speed less than 45 mph

ARRAY 'TU21'

Approach speed 45 mph or more

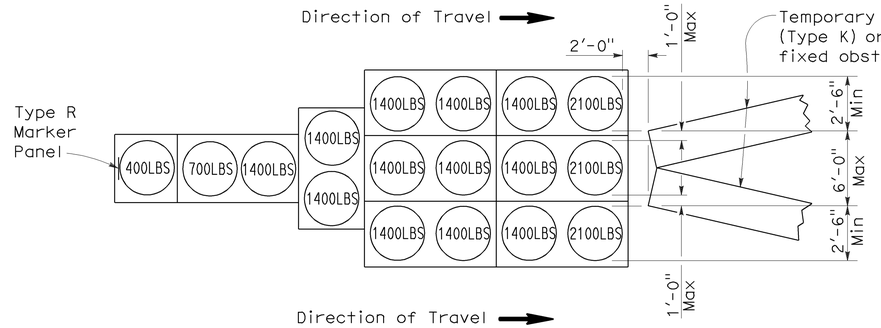

ARRAY 'TU17'

Approach speed less than 45 mph

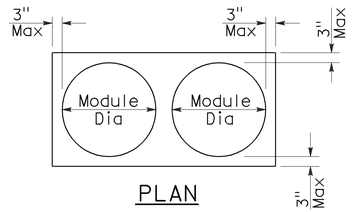

PLAN

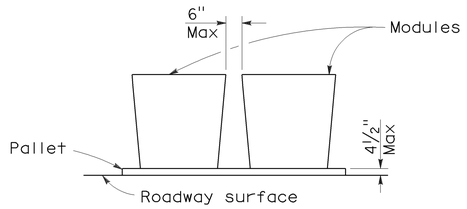

ELEVATION

CRASH CUSHION PALLET DETAIL

See Note 7

NOTES:

1. (XXX) Indicates sand filled module location and weight of sand in pounds for each module. Module spacing is based on the greater diameter of the module.
2. All sand weights are nominal.
3. Temporary crash cushion arrays shall not encroach on the traveled way.
4. Place the top of Type R marker panel 1" below the module lid.
5. Refer to Standard Plan A73B for marker details.
6. Approach speeds indicated conform to NCHRP 350 Report criteria.
7. Use of pallets is optional.

STATE OF CALIFORNIA
DEPARTMENT OF TRANSPORTATION

TEMPORARY CRASH CUSHION, SAND FILLED (UNIDIRECTIONAL)

NO SCALE

RSP T1A DATED JUNE 6, 2008 SUPERSEDES STANDARD PLAN T1A
DATED MAY 1, 2006 - PAGE 211 OF THE STANDARD PLANS BOOK DATED MAY 2006.

REVISED STANDARD PLAN RSP T1A

2006 REVISED STANDARD PLAN RSP T1A

5-15-08

DIST	COUNTY	ROUTE	POST MILES TOTAL PROJECT	SHEET NO.	TOTAL SHEETS
03	Sie	49	16.9/41.4	25	31

Randell D. Hiatt
REGISTERED CIVIL ENGINEER

June 6, 2008
PLANS APPROVAL DATE

The State of California or its officers or agents shall not be responsible for the accuracy or completeness of electronic copies of this plan sheet.

REGISTERED PROFESSIONAL ENGINEER
Randell D. Hiatt
No. C50200
Exp. 6-30-09
CIVIL
STATE OF CALIFORNIA

To accompany plans dated 6-28-11

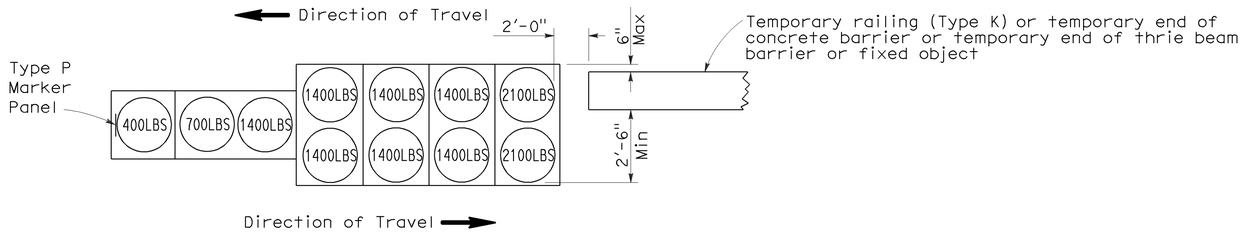

ARRAY 'TB11'

Approach speed less than 45 mph

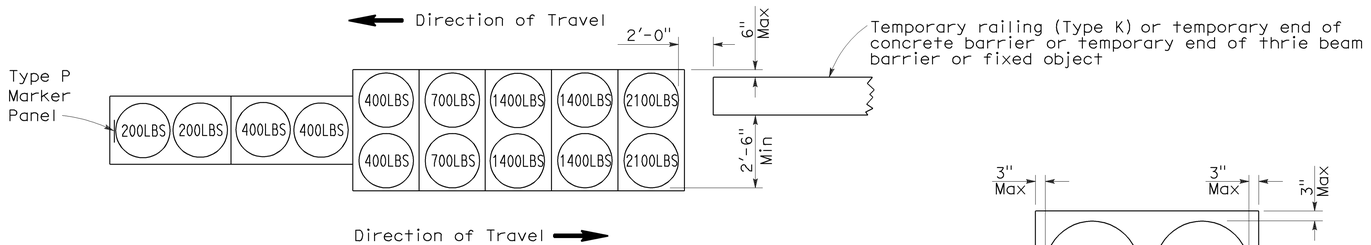

ARRAY 'TB14'

Approach speed 45 mph or more

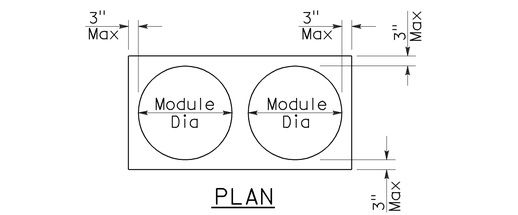

CRASH CUSHION PALLET DETAIL

See Note 7

NOTES:

1. (XXX) Indicates sand filled module location and weight of sand in pounds for each module. Module spacing is based on the greater diameter of the module.
2. All sand weights are nominal.
3. Temporary crash cushion arrays shall not encroach on the traveled way.
4. Place the Type P marker panel so that the bottom of the panel rests upon the pallet.
5. Refer to Standard Plan A73B for marker details.
6. Approach speeds indicated conform to NCHRP 350 Report criteria.
7. Use of pallets is optional.

STATE OF CALIFORNIA
DEPARTMENT OF TRANSPORTATION

TEMPORARY CRASH CUSHION, SAND FILLED (BIDIRECTIONAL)

NO SCALE

RSP T1B DATED JUNE 6, 2008 SUPERSEDES STANDARD PLAN T1B
DATED MAY 1, 2006 - PAGE 212 OF THE STANDARD PLANS BOOK DATED MAY 2006.

REVISED STANDARD PLAN RSP T1B

2006 REVISED STANDARD PLAN RSP T1B

5-15-08

DIST	COUNTY	ROUTE	POST MILES TOTAL PROJECT	SHEET NO.	TOTAL SHEETS
03	Sie	49	16.9/41.4	26	31

Randell D. Hiatt
REGISTERED CIVIL ENGINEER

June 6, 2008
PLANS APPROVAL DATE

REGISTERED PROFESSIONAL ENGINEER
Randell D. Hiatt
No. C50200
Exp. 6-30-09
CIVIL
STATE OF CALIFORNIA

The State of California or its officers or agents shall not be responsible for the accuracy or completeness of electronic copies of this plan sheet.

To accompany plans dated 6-28-11

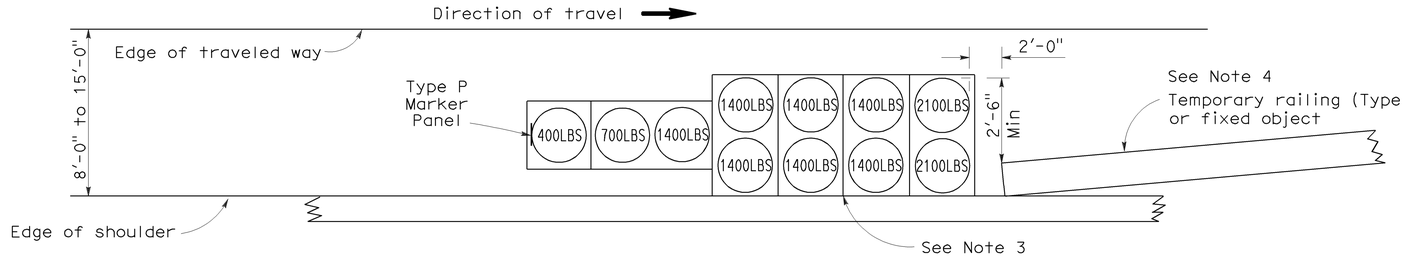

ARRAY 'TS11'

Approach speed less than 45 mph
See Note 9

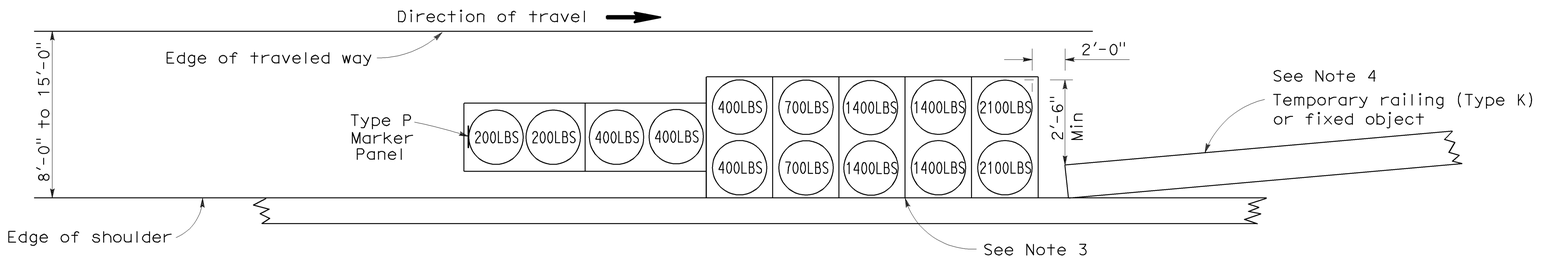

ARRAY 'TS14'

Approach speed 45 mph or more
See Note 9

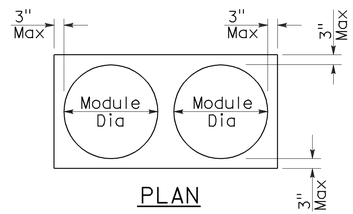

PLAN

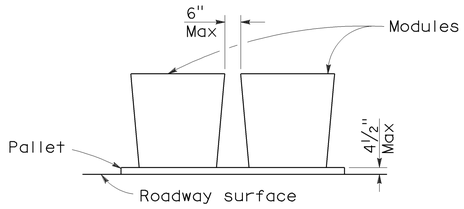

ELEVATION

CRASH CUSHION PALLET DETAIL

See Note 11

NOTES:

1. (XXX) Indicates sand filled module location and weight of sand in pounds for each module. Module spacing is based on the greater diameter of the module.
2. All sand weights are nominal.
3. The temporary crash cushion arrays shown on this plan shall be used only in locations where there will be traffic on one side of the temporary crash cushion array.
4. If the fixed object or approach end of the temporary railing is less than 15'-0" from the edge of traveled way, a temporary crash cushion is required in a construction or work zone.
5. Temporary crash cushion arrays shall not encroach on the traveled way.
6. Arrays for median shoulders shall conform to details shown on this plan for outside shoulders.
7. Place the Type P marker panel so that the bottom of the panel rests upon the pallet and faces traffic.
8. Refer to Standard Plan A73B for marker details.
9. For shoulder widths less than 8'-0", appropriate approved crash cushion protection, other than sand filled modules, shall be provided at fixed objects and at approach ends of temporary railing. The specific type of crash cushion shall be as shown on the project plans or as specified in the Special Provisions, or if not shown on the project plans or specified in the Special Provisions, shall be as approved by the Engineer.
10. Approach speeds indicated conform to NCHRP 350 Report criteria.
11. Use of pallets is optional.

STATE OF CALIFORNIA
DEPARTMENT OF TRANSPORTATION

TEMPORARY CRASH CUSHION, SAND FILLED (SHOULDER INSTALLATIONS)

NO SCALE

RSP T2 DATED JUNE 6, 2008 SUPERSEDES STANDARD PLAN T2
DATED MAY 1, 2006 - PAGE 213 OF THE STANDARD PLANS BOOK DATED MAY 2006.

REVISED STANDARD PLAN RSP T2

2006 REVISED STANDARD PLAN RSP T2

5-15-08

DIST	COUNTY	ROUTE	POST MILES TOTAL PROJECT	SHEET NO.	TOTAL SHEETS
03	Sie	49	16.9/41.4	27	31

Greg W. Edwards
REGISTERED CIVIL ENGINEER

November 17, 2006
PLANS APPROVAL DATE

REGISTERED PROFESSIONAL ENGINEER — Greg W. Edwards — No. C36386 — Exp. 6-30-08 CIVIL — STATE OF CALIFORNIA

The State of California or its officers or agents shall not be responsible for the accuracy or completeness of electronic copies of this plan sheet.

To accompany plans dated 6-28-11

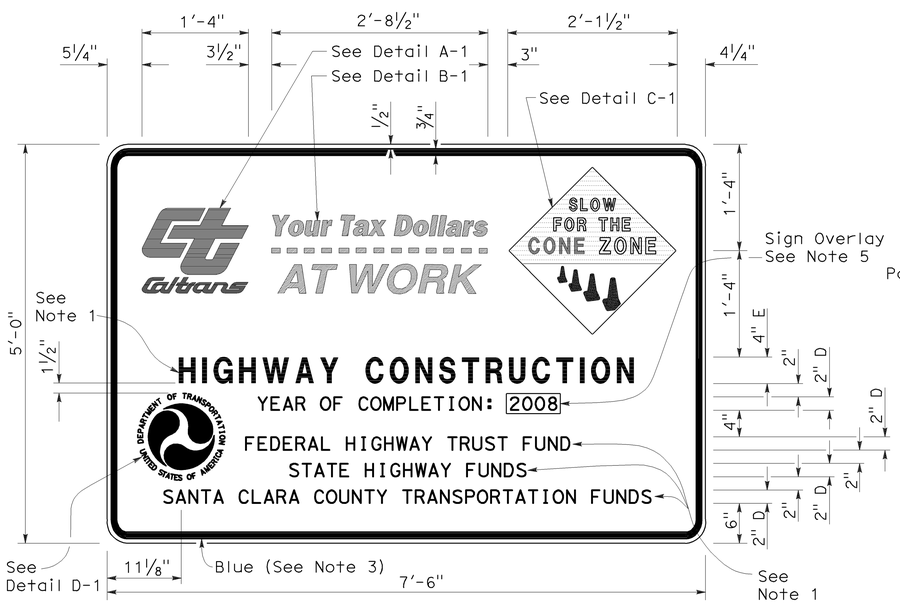

TYPE 1

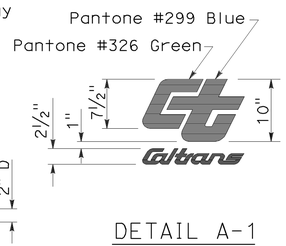

DETAIL A-1

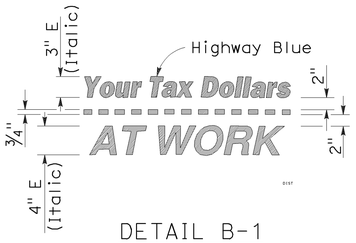

DETAIL B-1
(See Note 3)

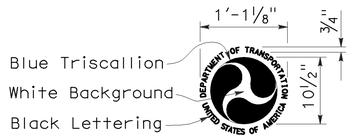

DETAIL D-1
(See Note 6)

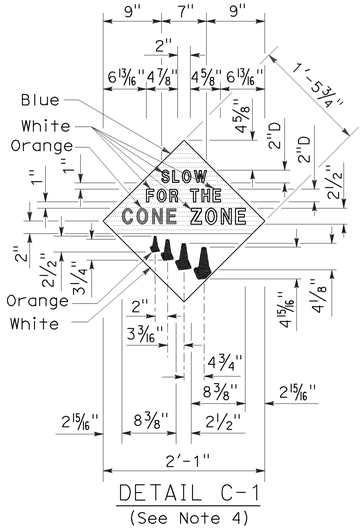

DETAIL C-1
(See Note 4)

NOTES:

1. The sign messages shown for type of project and fund types are examples only. See the Special Provisions for the applicable type of project and fund type messages to be used.
2. Except as otherwise shown, the legend of sign shall be black on a white background (non-reflective).
3. The border of the signs and details "B-1" and "B-2" shall be blue (non-reflective).
4. The diamond in details "C-1" and "C-2" shall be blue for the background of message, " SLOW FOR THE CONE ZONE", and white background for the orange cones. The color and type of font for the "SLOW FOR THE CONE ZONE" message shall be: "SLOW" white D; "FOR THE" white D; "CONE" orange Arial font; "ZONE" white Arial font.
5. Year of completion of project construction shown on the overlay is an example only. See the Special Provisions.
6. Use when the Project involves Federal Highway Trust Fund.

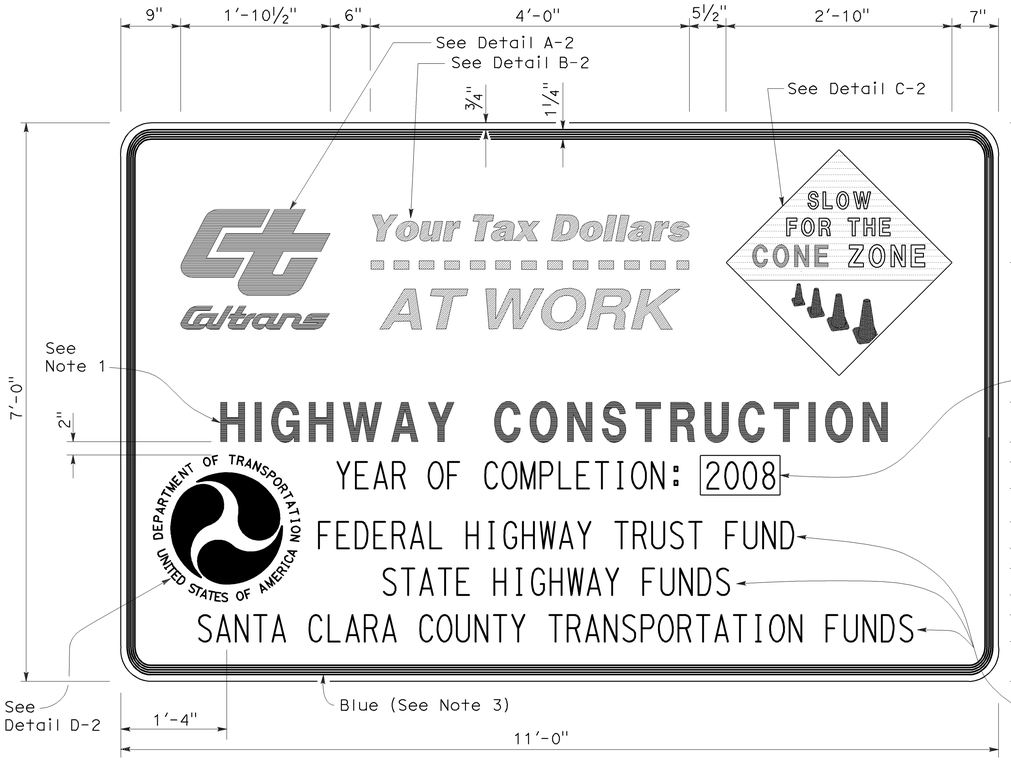

TYPE 2

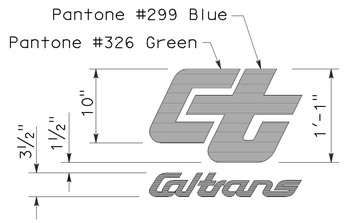

DETAIL A-2

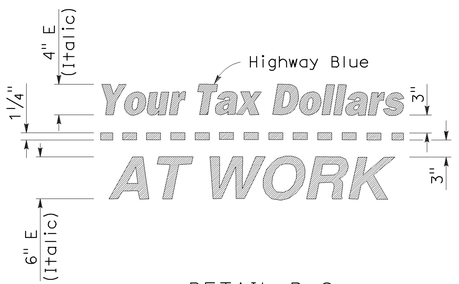

DETAIL B-2
(See Note 3)

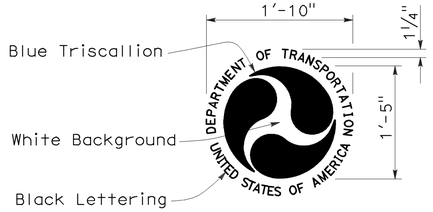

DETAIL D-2
(See Note 6)

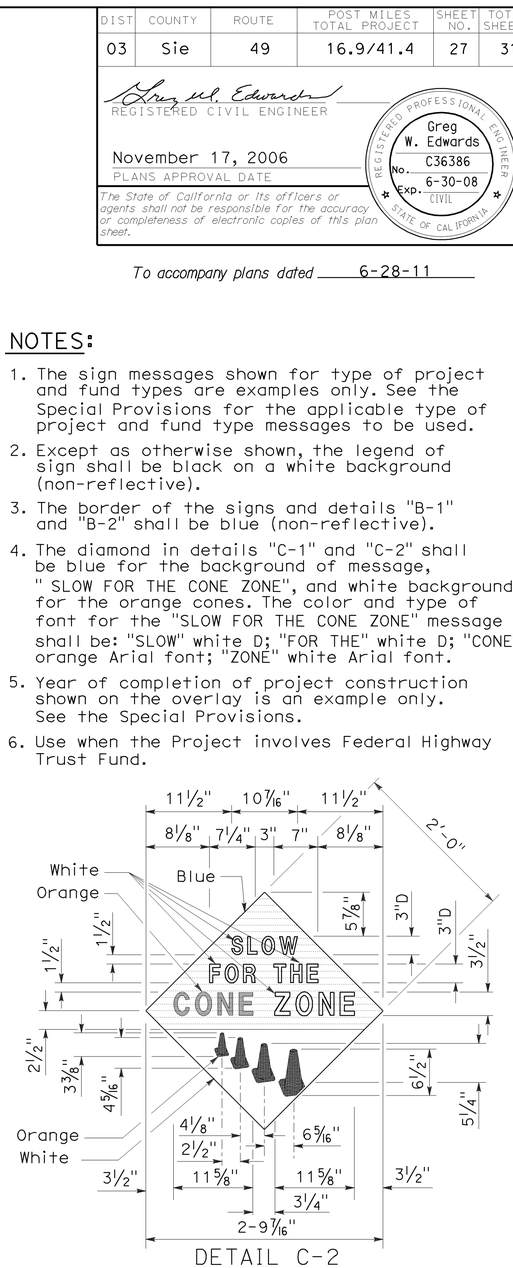

DETAIL C-2
(See Note 4)

STATE OF CALIFORNIA
DEPARTMENT OF TRANSPORTATION

CONSTRUCTION PROJECT FUNDING IDENTIFICATION SIGNS

NO SCALE

RSP T7 DATED NOVEMBER 17, 2006 SUPERSEDES STANDARD PLAN T7
DATED MAY 1, 2006 - PAGE 217 OF THE STANDARD PLANS BOOK DATED MAY 2006.

REVISED STANDARD PLAN RSP T7

2006 REVISED STANDARD PLAN RSP T7

9-7-06

DIST	COUNTY	ROUTE	POST MILES TOTAL PROJECT	SHEET NO.	TOTAL SHEETS
03	Sie	49	16.9/41.4	28	31

Robert B Schott
LICENSED LANDSCAPE ARCHITECT

August 15, 2008
PLANS Approval DATE

LICENSED LANDSCAPE ARCHITECT
Robert B. Schott 3695
Signature
11-04-08
Renewal Date
08-11-08
Date
STATE OF CALIFORNIA

The State of California or its officers or agents shall not be responsible for the accuracy or completeness of electronic copies of this plan sheet.

To accompany plans dated 6-28-11

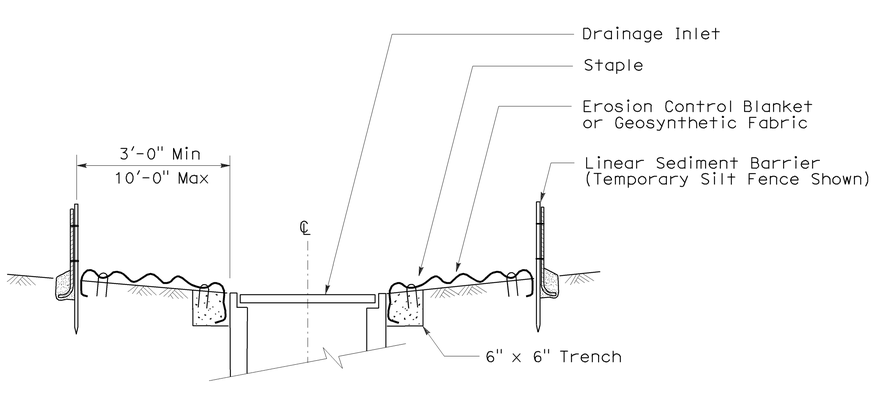

SECTION A-A

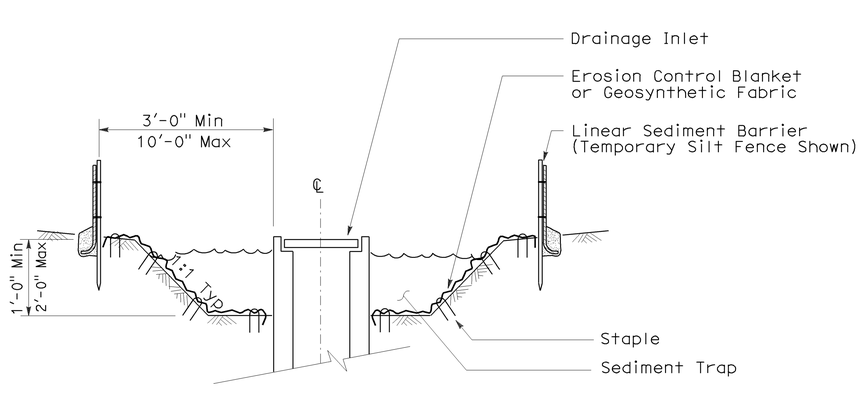

SECTION B-B

NOTES:

1. See Standard Plan T51 for Temporary Silt Fence.
2. Dimensions may vary to fit field conditions.

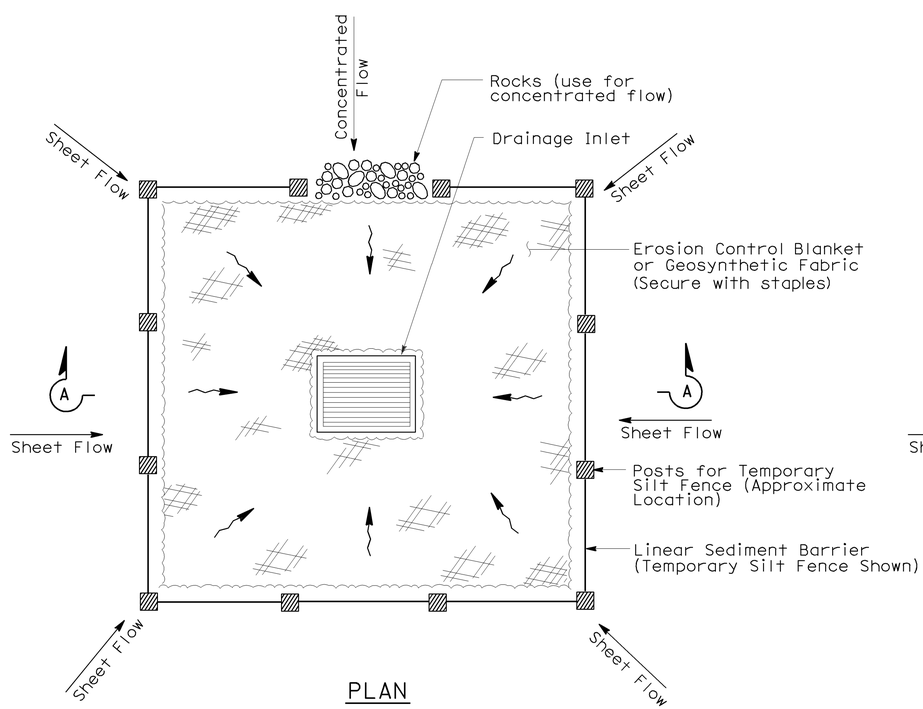

PLAN

TEMPORARY DRAINAGE INLET PROTECTION (TYPE 1)

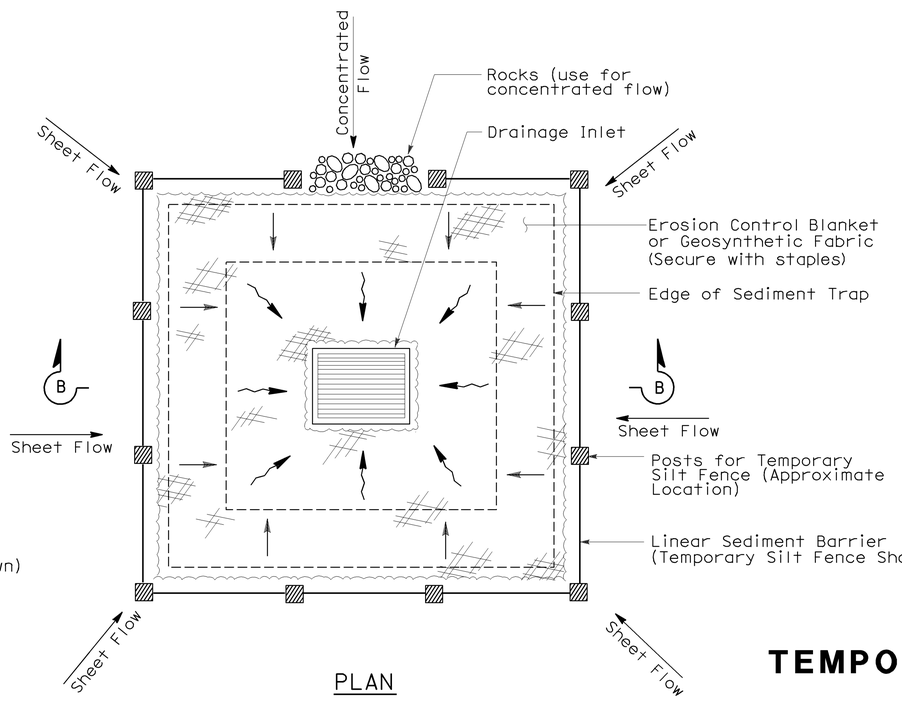

PLAN

TEMPORARY DRAINAGE INLET PROTECTION (TYPE 2) (EXCAVATED SEDIMENT TRAP)

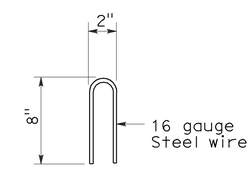

STAPLE DETAIL

STATE OF CALIFORNIA
DEPARTMENT OF TRANSPORTATION

TEMPORARY WATER POLLUTION CONTROL DETAILS (TEMPORARY DRAINAGE INLET PROTECTION)

NO SCALE

Nsp t61 dated august 15, 2008 supplements the standard plans book dated may 2006.

NEW STANDARD PLAN NSP T61

2006 NEW STANDARD PLAN NSP T61

7-11-08

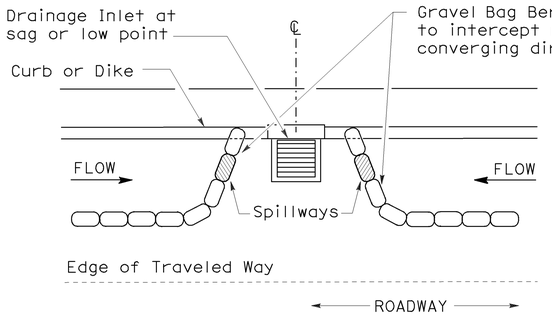

PLAN

CONFIGURATION FOR SAG POINT INLET (GRAVEL BAG BERM)

GRAVEL BAG BERM (TYPE 3A) SPACING TABLE

SLOPE OF ROADWAY (PERCENT)	1 to 3.9	4 to 5.9	6 to 7.9	8 to 10	10+
INTERVAL BETWEEN BERM	100′	75′	50′	25′	12′

For slope of less than 1%, install barriers only if erosion/sediment is prevalent

DIST	COUNTY	ROUTE	POST MILES TOTAL PROJECT	SHEET NO.	TOTAL SHEETS
03	Sie	49	16.9/41.4	29	31

Robert B Schott
LICENSED LANDSCAPE ARCHITECT

August 15, 2008
PLANS APPROVAL DATE

LICENSED LANDSCAPE ARCHITECT — Robert B. Schott 3695 — Registration Date 11-04-08 — Renewal Date 08-11-08 — Date — STATE OF CALIFORNIA

The State of California or its officers or agents shall not be responsible for the accuracy or completeness of electronic copies of this plan sheet.

To accompany plans dated 6-28-11

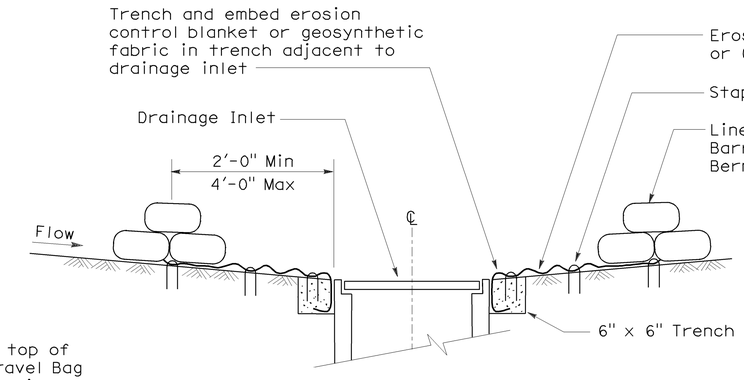

SECTION A-A

NOTES:

1. Place safety cones adjacent to drainage inlet protection.
2. Dimensions may vary to fit field conditions.
3. Install a minimum of 3 gravel bag berms upstream of each drainage inlet to be protected.
4. Position erosion control blanket or geosynthetic fabric at edge of concrete apron and secure in trench.
5. Erosion control blanket or geosynthetic fabric is not required if the area adjacent to the drainage inlet is vegetated or paved.

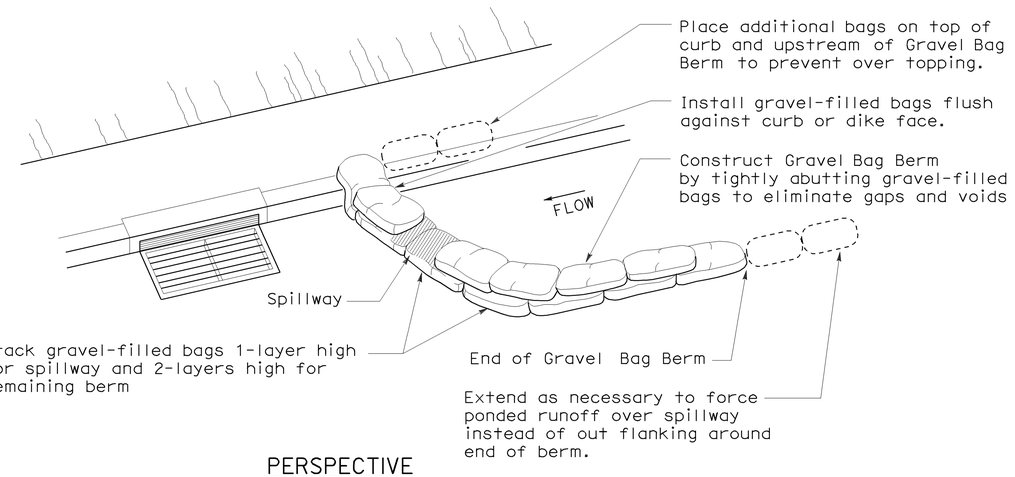

PERSPECTIVE

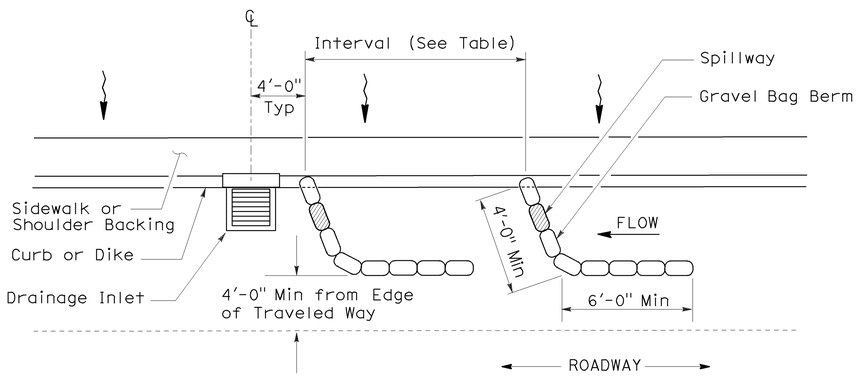

PLAN

TEMPORARY DRAINAGE INLET PROTECTION (TYPE 3A) (GRAVEL BAG BERM)

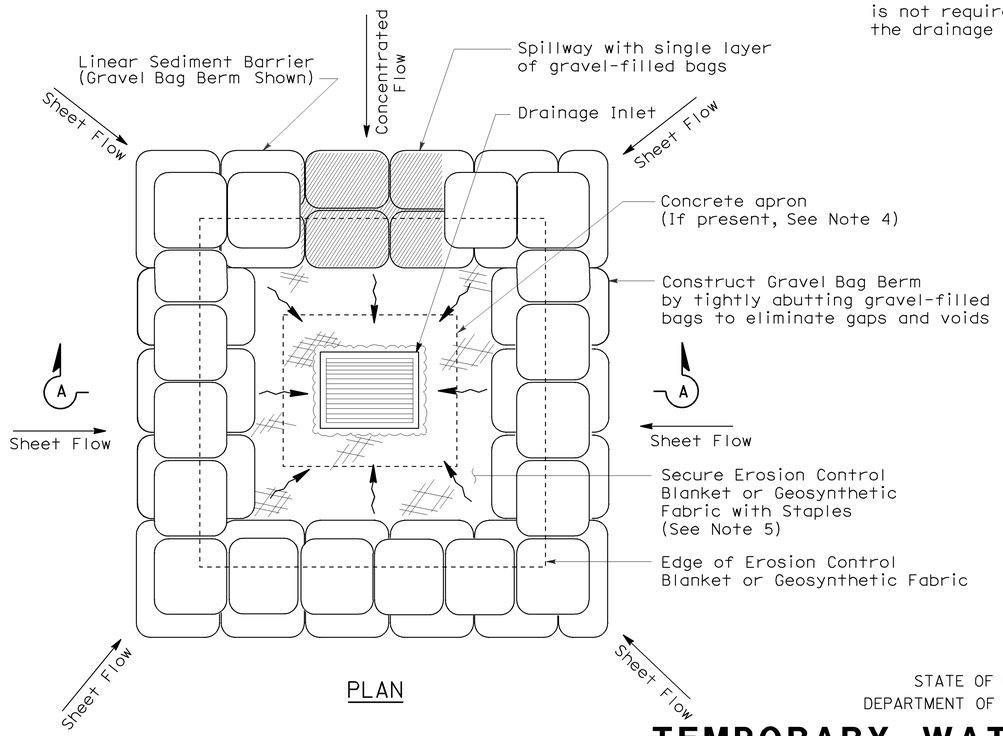

PLAN

TEMPORARY DRAINAGE INLET PROTECTION (TYPE 3B)

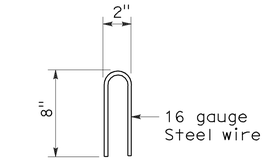

STAPLE DETAIL

STATE OF CALIFORNIA
DEPARTMENT OF TRANSPORTATION

TEMPORARY WATER POLLUTION CONTROL DETAILS (TEMPORARY DRAINAGE INLET PROTECTION)

NO SCALE

NSP T62 DATED AUGUST 15, 2008 SUPPLEMENTS THE STANDARD PLANS BOOK DATED MAY 2006.

NEW STANDARD PLAN NSP T62

2006 NEW STANDARD PLAN NSP T62

7-11-08

FLEXIBLE SEDIMENT BARRIER SPACING TABLE

SLOPE OF ROADWAY (PERCENT)	0 to 0.9	1 to 1.9	2 to 2.9	3 to 4	5+
INTERVAL BETWEEN BARRIERS	50′	35′	30′	25′	20′
ANGLE FROM FACE OF CURB	70°	70°	70°	45°	45°
SUGGESTED BARRIER LENGTH	6′	6′	6′	6′	6′

DIST	COUNTY	ROUTE	POST MILES TOTAL PROJECT	SHEET NO.	TOTAL SHEETS
03	Sie	49	16.9/41.4	30	31

Robert B Schott
LICENSED LANDSCAPE ARCHITECT

August 15, 2008
PLANS APPROVAL DATE

LICENSED LANDSCAPE ARCHITECT — Robert B. Schott 3835 — Registration Date 11-04-08 — Renewal Date 08-11-08 — Date — STATE OF CALIFORNIA

The State of California or its officers or agents shall not be responsible for the accuracy or completeness of electronic copies of this plan sheet.

To accompany plans dated 6-28-11

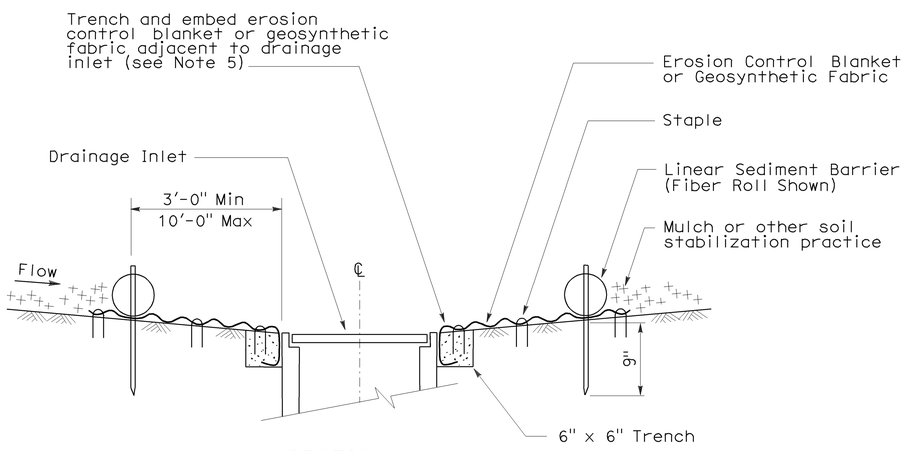

SECTION A-A

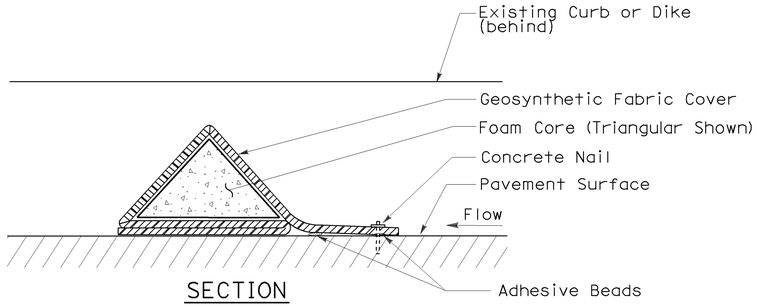

SECTION

FLEXIBLE SEDIMENT BARRIER DETAIL (FOAM BARRIER SHOWN)

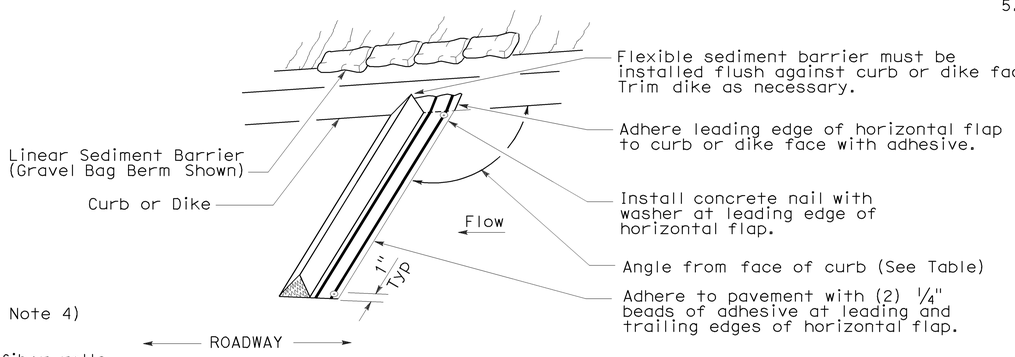

PERSPECTIVE

NOTES:

1. See Standard Plan T51 for Temporary Silt Fence.
2. Dimensions may vary to fit field conditions.
3. Install a minimum of 3 flexible sediment barriers upstream of each drainage inlet to be protected.
4. Position erosion control blanket or geosynthetic fabric at edge of concrete apron and secure in trench.
5. Erosion control blanket or geosynthetic fabric is not required if the area adjacent to the drainage inlet is vegetated.

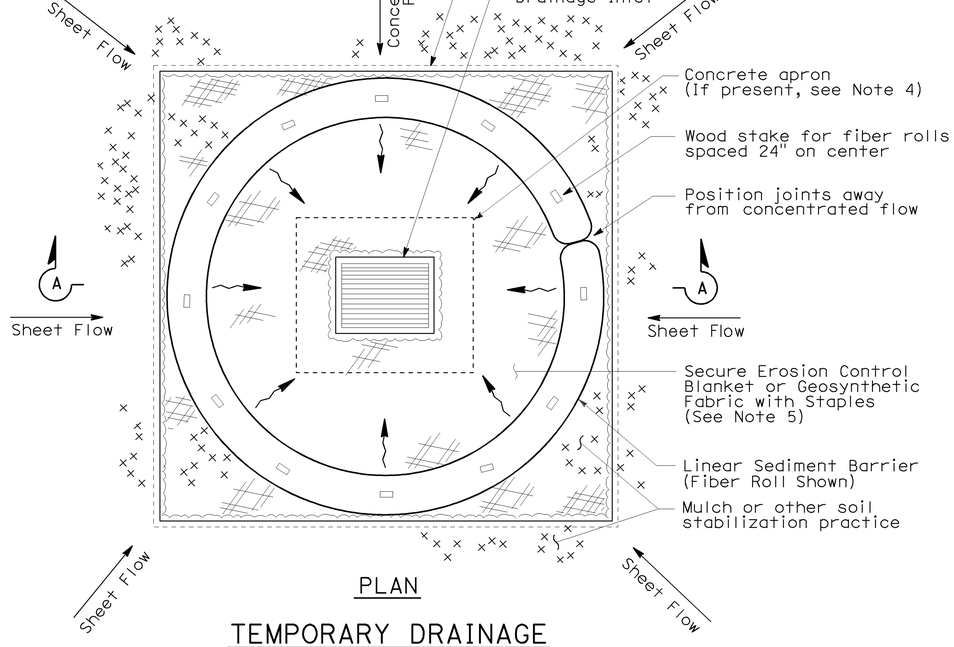

PLAN

TEMPORARY DRAINAGE INLET PROTECTION (TYPE 4A)

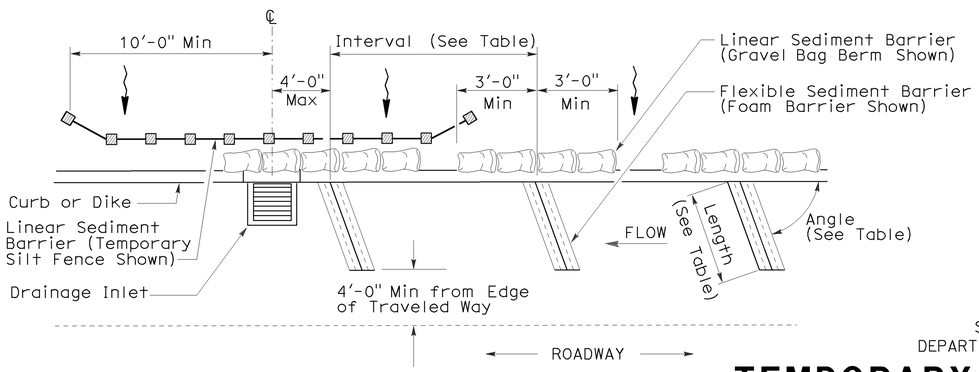

PLAN

TEMPORARY DRAINAGE INLET PROTECTION (TYPE 4B) FLEXIBLE SEDIMENT BARRIER

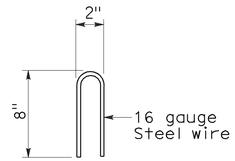

STAPLE DETAIL

STATE OF CALIFORNIA
DEPARTMENT OF TRANSPORTATION

TEMPORARY WATER POLLUTION CONTROL DETAILS (TEMPORARY DRAINAGE INLET PROTECTION)

NO SCALE

NSP T63 DATED AUGUST 15, 2008 SUPPLEMENTS THE STANDARD PLANS BOOK DATED MAY 2006.

NEW STANDARD PLAN NSP T63

2006 NEW STANDARD PLAN NSP T63

7-11-08

DIST	COUNTY	ROUTE	POST MILES TOTAL PROJECT	SHEET NO.	TOTAL SHEETS
03	Sie	49	16.9/41.4	31	31

Robert B Schott
LICENSED LANDSCAPE ARCHITECT

August 15, 2008
PLANS APPROVAL DATE

LICENSED LANDSCAPE ARCHITECT
Robert B. Schott 3695
Signature
11-04-08
Renewal Date
08-11-08
Date
STATE OF CALIFORNIA

The State of California or its officers or agents shall not be responsible for the accuracy or completeness of electronic copies of this plan sheet.

To accompany plans dated 6-28-11

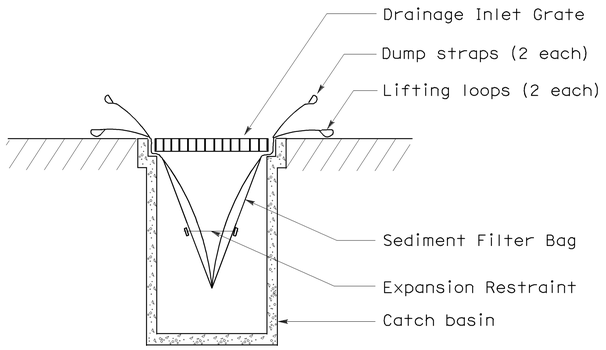

SECTION B-B

SEDIMENT FILTER BAG DETAIL

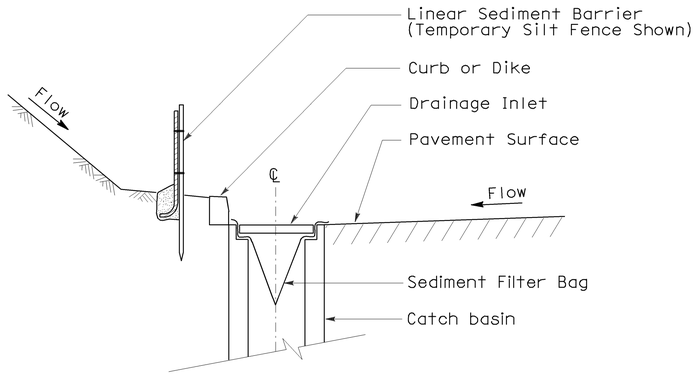

SECTION A-A

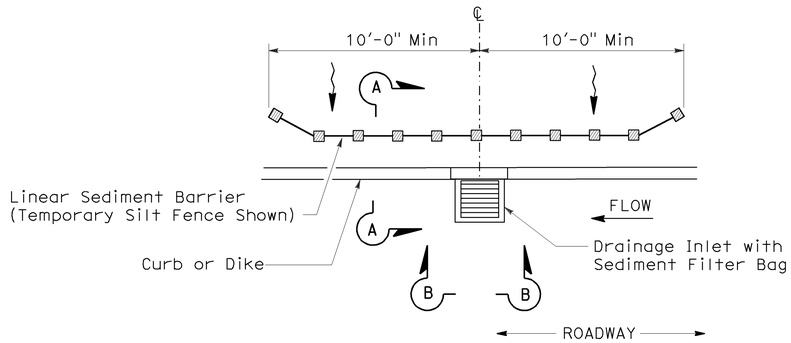

PLAN

TEMPORARY DRAINAGE INLET PROTECTION (TYPE 5) (SEDIMENT FILTER BAG)

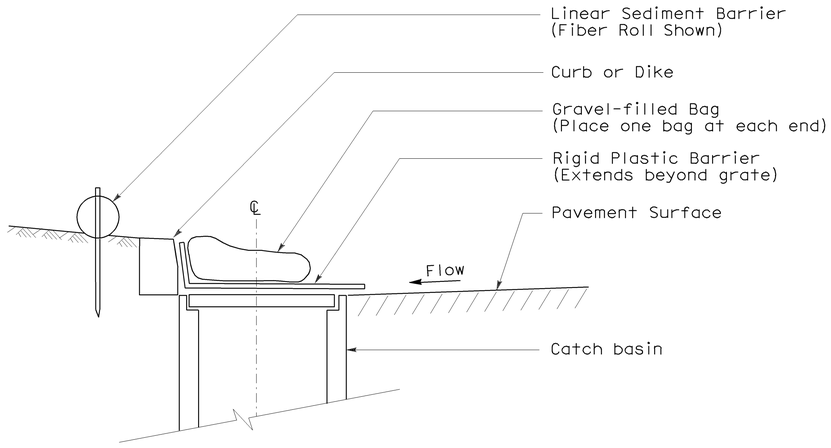

SECTION

TEMPORARY DRAINAGE INLET PROTECTION (TYPE 6A) (CATCH BASIN WITH GRATE)

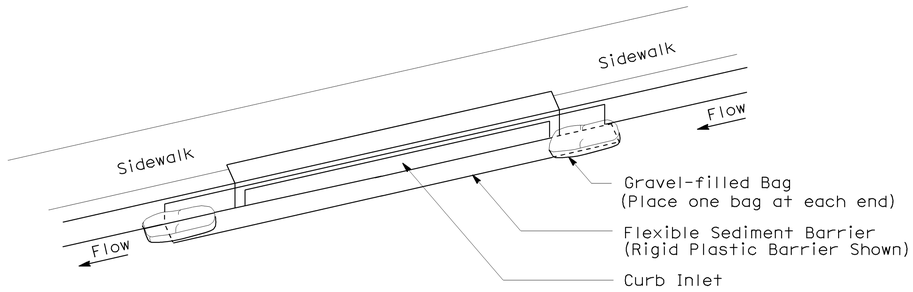

PERSPECTIVE

TEMPORARY DRAINAGE INLET PROTECTION (TYPE 6B) (CURB INLET WITHOUT GRATE)

NOTES:

1. See Standard Plan T51 for Temporary Silt Fence.
2. Dimensions may vary to fit field conditions.

STATE OF CALIFORNIA
DEPARTMENT OF TRANSPORTATION

TEMPORARY WATER POLLUTION CONTROL DETAILS (TEMPORARY DRAINAGE INLET PROTECTION)

NO SCALE

NSP T64 DATED AUGUST 15, 2008 SUPPLEMENTS
THE STANDARD PLANS BOOK DATED MAY 2006.

NEW STANDARD PLAN NSP T64

2006 NEW STANDARD PLAN NSP T64

7-11-08