STP-P267(020)E

Dist	COUNTY	ROUTE	POST MILES TOTAL PROJECT	SHEET No.	TOTAL SHEETS
03	Pla	267	4.9/6.7	1	74

STATE OF CALIFORNIA
DEPARTMENT OF TRANSPORTATION

PROJECT PLANS FOR CONSTRUCTION ON
STATE HIGHWAY
IN PLACER COUNTY FROM 1.1 MILES EAST OF NORTH STAR DRIVE TO 0.5 MILE SOUTH OF MARTIS PEAK ROAD

TO BE SUPPLEMENTED BY STANDARD PLANS DATED MAY 2006

INDEX OF PLANS

SHEET No.	DESCRIPTION
1	TITLE AND LOCATION MAP
2-5	TYPICAL CROSS SECTIONS
6-13	LAYOUTS
14-25	EROSION CONTROL, DETAILS AND QUANTITIES
26-54	DRAINAGE PLANS, PROFILES, DETAILS AND QUANTITIES
55	CONSTRUCTION AREA SIGNS
56	SUMMARY OF QUANTITIES
57-74	REVISED AND NEW STANDARD PLANS

THE STANDARD PLANS LIST APPLICABLE TO THIS CONTRACT IS INCLUDED IN THE NOTICE TO BIDDERS AND SPECIAL PROVISIONS BOOK.

LOCATION MAP

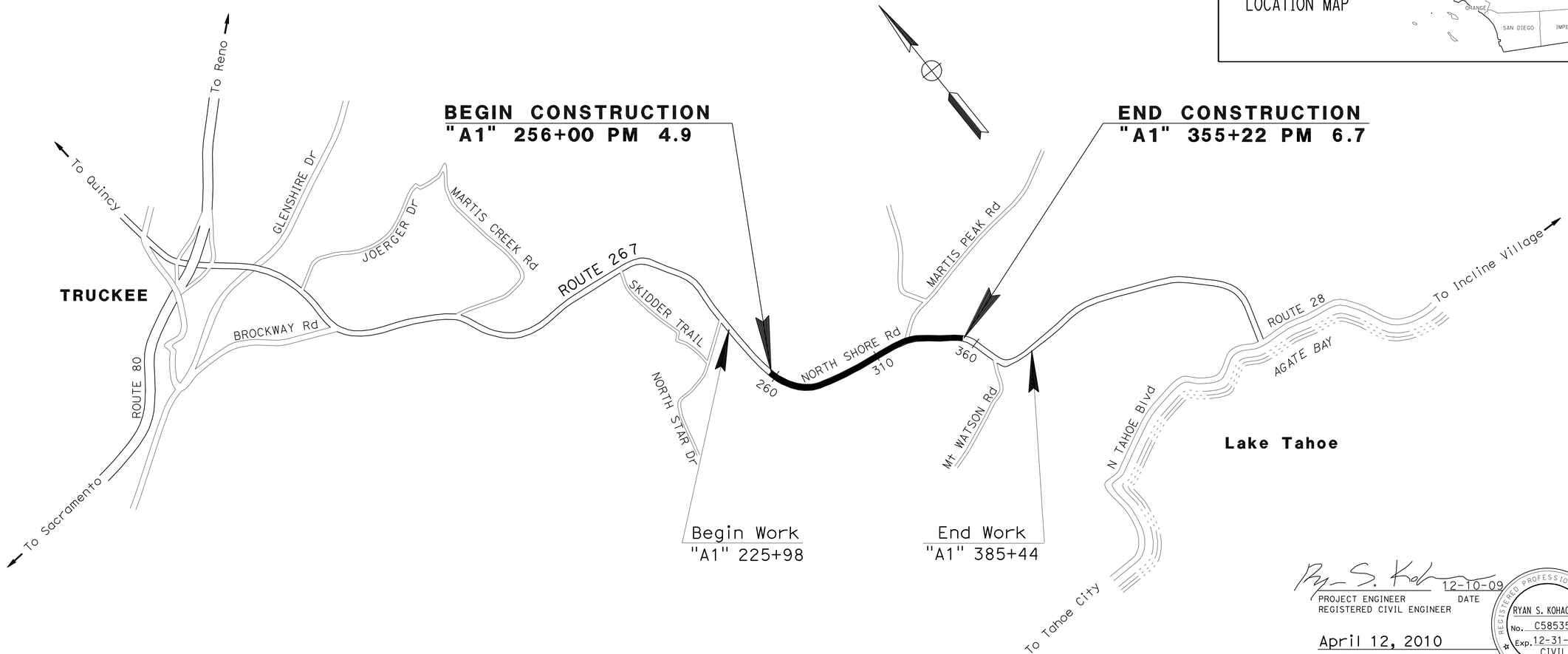

NO SCALE

PROJECT MANAGER ALI KIANI

DESIGN ENGINEER MASTRI ALVANDI

Ryan S. Kohagura 12-10-09
PROJECT ENGINEER DATE
REGISTERED CIVIL ENGINEER

April 12, 2010
PLANS APPROVAL DATE

REGISTERED PROFESSIONAL ENGINEER
RYAN S. KOHAGURA
No. C58535
Exp. 12-31-10
CIVIL
STATE OF CALIFORNIA

THE STATE OF CALIFORNIA OR ITS OFFICERS OR AGENTS SHALL NOT BE RESPONSIBLE FOR THE ACCURACY OR COMPLETENESS OF SCANNED COPIES OF THIS PLAN SHEET.

THE CONTRACTOR SHALL POSSESS THE CLASS (OR CLASSES) OF LICENSE AS SPECIFIED IN THE "NOTICE TO BIDDERS."

CONTRACT No.	03-0E9904
PROJECT ID	0300000062

LAST REVISION 12-09-09
DATE PLOTTED => 04-AUG-2010
TIME PLOTTED => 05:46

Dist	COUNTY	ROUTE	POST MILES TOTAL PROJECT	SHEET No.	TOTAL SHEETS
03	Pla	267	4.9/6.7	2	74

REGISTERED CIVIL ENGINEER 12-10-09 DATE

4-12-10
PLANS APPROVAL DATE

REGISTERED PROFESSIONAL ENGINEER RYAN S. KOHAGURA No. C58535 Exp. 12-31-10 CIVIL STATE OF CALIFORNIA

THE STATE OF CALIFORNIA OR ITS OFFICERS OR AGENTS SHALL NOT BE RESPONSIBLE FOR THE ACCURACY OR COMPLETENESS OF SCANNED COPIES OF THIS PLAN SHEET.

DESIGN DESIGNATION (ROUTE 267, PM 4.85/6.73)

V = 55 MPH 2012 ADT = 9,690 D = 60%
2032 ADT = 14,500 T = 3.0 %
DHV (2032) = 1,710 TI = 9.0

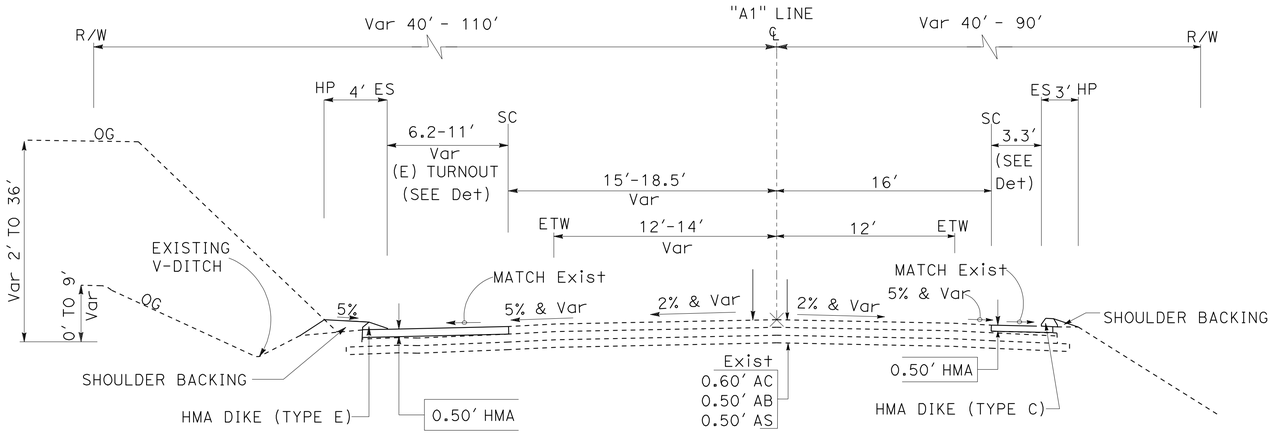

"A" 256+50.00 TO 257+00.00 L†
"A" 262+26.50 TO 262+46.77 L†
"A" 265+00.00 TO 266+00.00 L†
"A" 269+80.50 TO 270+25.00 L†
"A" 274+08.11 TO 274+98.13 L†

""A" 261+54.68 TO 261+97.90 R†

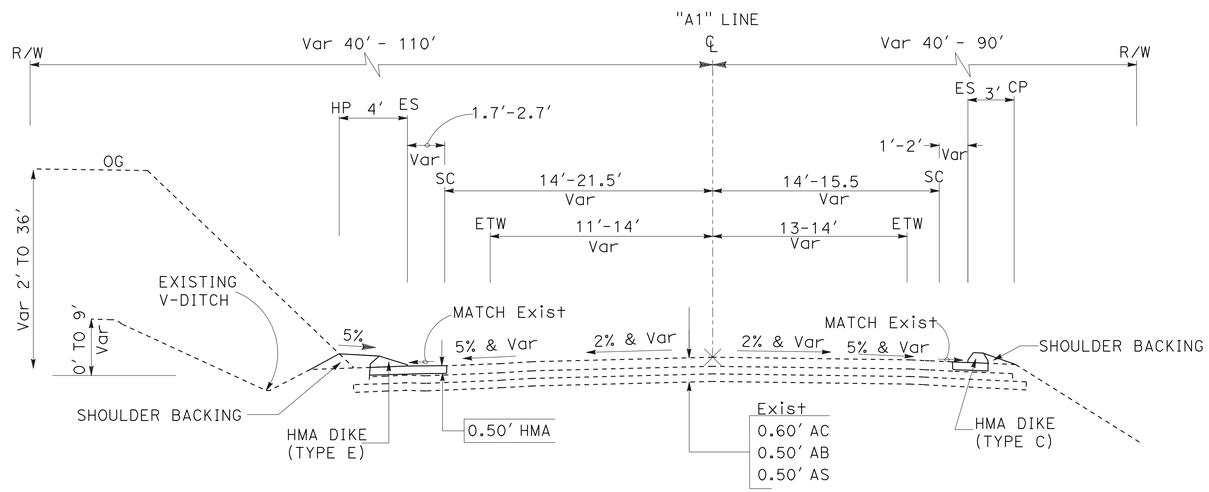

"A" 256+00.00 TO 256+50.00 L†
"A" 257+09.41 TO 262+19.17 L†
"A" 262+46.77 TO 265+00.00 L†
"A" 266+00.00 TO 266+17.30 L†
"A" 268+00.00 TO 269+80.50 L†
"A" 270+50.00 TO 274+08.11 L†
"A" 279+29.48 TO 281+50.00 L†
"A" 287+50.00 TO 288+50.00 L†
"A" 289+65.50 TO 292+50.00 L†
"A" 294+50.00 TO 296+50.00 L†
"A" 304+50.00 TO 305+50.00 L†
"A" 312+64.50 TO 317+50.00 L†

"A" 257+84.63 TO 261+54.68 R†
"A" 267+95.03 TO 273+52.86 R†
"A" 279+28.41 TO 281+45.26 R†
"A" 284+16.07 TO 286+34.84 R†
"A" 286+47.84 TO 290+73.51 R†
"A" 290+86.51 TO 294+15.24 R†
"A" 296+47.78 TO 300+97.00 R†
"A" 301+10.00 TO 307+33.86 R†
"A" 307+46.86 TO 309+93.50 R†
"A" 310+06.50 TO 314+50.00 R†

NOTES

1. DIMENSIONS OF THE PAVEMENT STRUCTURES (STRUCTURAL SECTIONS) ARE SUBJECT TO TOLERANCES SPECIFIED IN THE STANDARD SPECIFICATIONS.
2. SUPERELEVATION AS SHOWN OR AS DIRECTED BY THE ENGINEER.

ABBREVIATION:

SC - SAWCUT LINE
RS - ROCK STAIN

TYPICAL CROSS SECTIONS

NO SCALE

ROUTE 267

X-1

STATE OF CALIFORNIA - DEPARTMENT OF TRANSPORTATION
Caltrans PROJECT DEVELOPMENT

FUNCTIONAL SUPERVISOR: MASTRI ALVANDI
CALCULATED-DESIGNED BY: CHARLES WOOTEN
CHECKED BY: RYAN KOHAGURA
REVISED BY
DATE REVISED

LAST REVISION 12-09-09 | DATE PLOTTED => 12-APR-2010 | TIME PLOTTED => 13:17

Dist	COUNTY	ROUTE	POST MILES TOTAL PROJECT	SHEET No.	TOTAL SHEETS
03	Pla	267	4.9/6.7	3	74

REGISTERED CIVIL ENGINEER 12-10-09 DATE

4-12-10
PLANS APPROVAL DATE

REGISTERED PROFESSIONAL ENGINEER RYAN S. KOHAGURA No. C58535 Exp. 12-31-10 CIVIL STATE OF CALIFORNIA

THE STATE OF CALIFORNIA OR ITS OFFICERS OR AGENTS SHALL NOT BE RESPONSIBLE FOR THE ACCURACY OR COMPLETENESS OF SCANNED COPIES OF THIS PLAN SHEET.

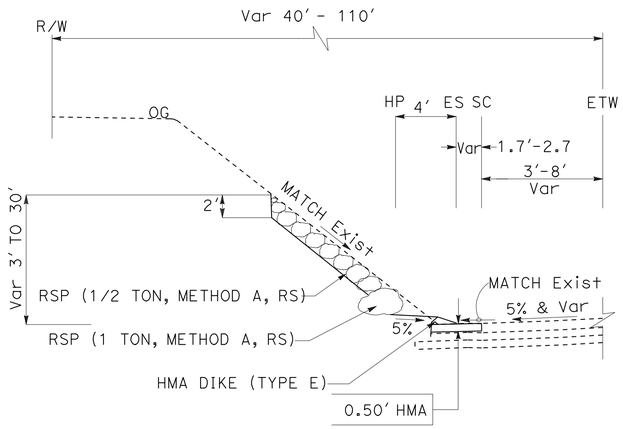

"A" 266+17.30 TO 268+00.00 L+
"A" 274+98.13 TO 278+50.00 L+
"A" 283+50.00 TO 285+50.00 L+
"A" 287+00.00 TO 287+50.00 L+
"A" 296+50.00 TO 297+33.85 L+
"A" 298+00.00 TO 298+50.00 L+
"A" 301+50.00 TO 302+00.00 L+
"A" 302+86.75 TO 303+50.00 L+
"A" 305+50.00 TO 306+50.00 L+
"A" 318+82.26 TO 327+55.63 L+

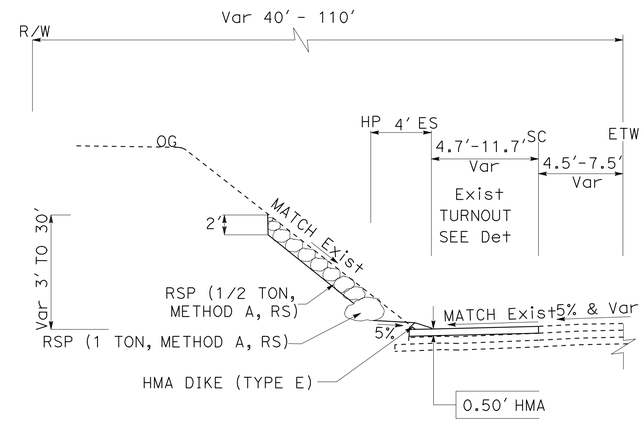

"A" 278+50.00 TO 279+29.48 L+
"A" 281+50.00 TO 283+50.00 L+
"A" 285+50.00 TO 287+00.00 L+
"A" 297+33.85 TO 298+00.00 L+
"A" 302+00.00 TO 302+86.75 L+
"A" 317+93.02 TO 318+82.26 L+

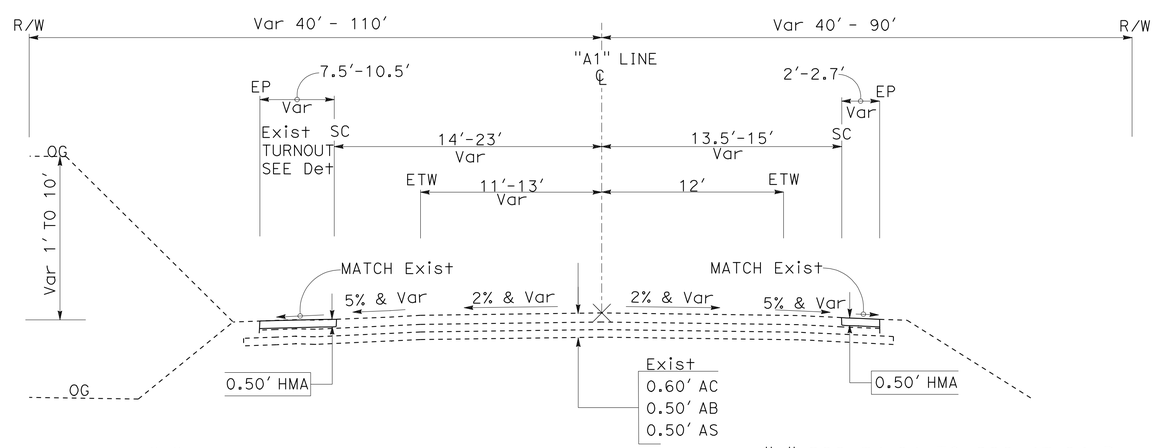

"A" 257+00.00 TO 257+09.41 L+
"A" 262+19.17 TO 262+26.50 L+
"A" 270+25.00 TO 270+50.00 L+
"A" 317+50.00 TO 317+93.02 L+

"A" 286+34.84 TO 286+47.84 R+
"A" 290+73.51 TO 290+86.51 R+
"A" 300+97.00 TO 301+10.00 R+
"A" 307+33.86 TO 307+46.86 R+
"A" 309+93.50 TO 310+06.50 R+

TYPICAL CROSS SECTIONS

NO SCALE

X-2

ROUTE 267

STATE OF CALIFORNIA - DEPARTMENT OF TRANSPORTATION
Caltrans PROJECT DEVELOPMENT

FUNCTIONAL SUPERVISOR: MASTRI ALVANDI
CALCULATED-DESIGNED BY: CHARLES WOOTEN
CHECKED BY: RYAN KOHAGURA
REVISED BY
DATE REVISED

LAST REVISION 12-09-09
DATE PLOTTED => 12-APR-2010
TIME PLOTTED => 13:17

Dist	COUNTY	ROUTE	POST MILES TOTAL PROJECT	SHEET No.	TOTAL SHEETS
03	Pla	267	4.9/6.7	4	74

REGISTERED CIVIL ENGINEER 12-10-09 DATE

4-12-10
PLANS APPROVAL DATE

REGISTERED PROFESSIONAL ENGINEER RYAN S. KOHAGURA No. C58535 Exp. 12-31-10 CIVIL STATE OF CALIFORNIA

THE STATE OF CALIFORNIA OR ITS OFFICERS OR AGENTS SHALL NOT BE RESPONSIBLE FOR THE ACCURACY OR COMPLETENESS OF SCANNED COPIES OF THIS PLAN SHEET.

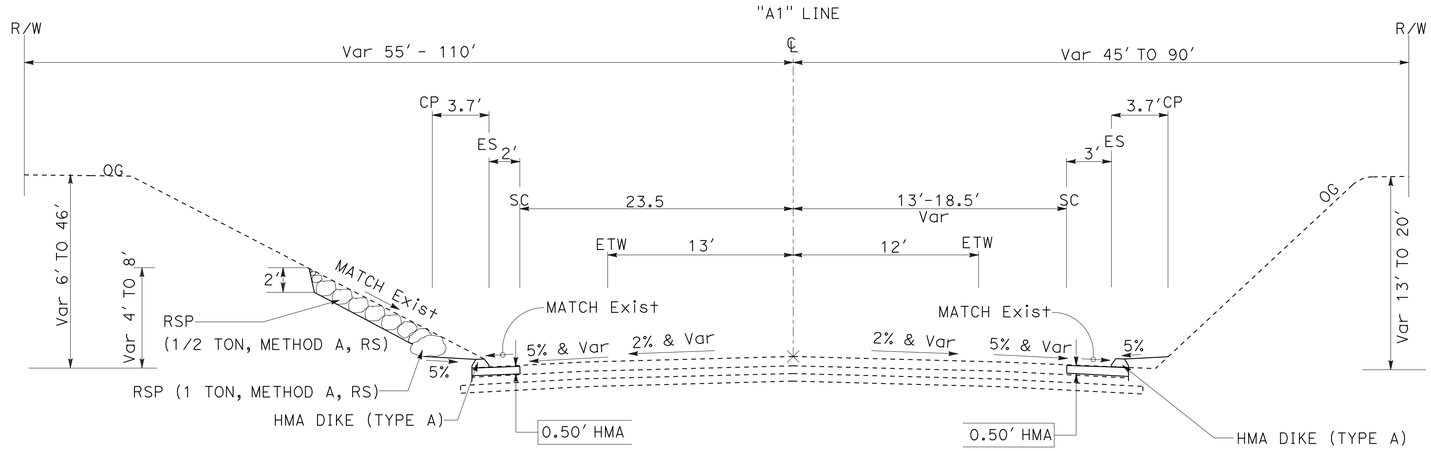

"A" 334+18.44 TO 334+50.00 L†

"A" 334+50.00 TO 335+00.00 R†

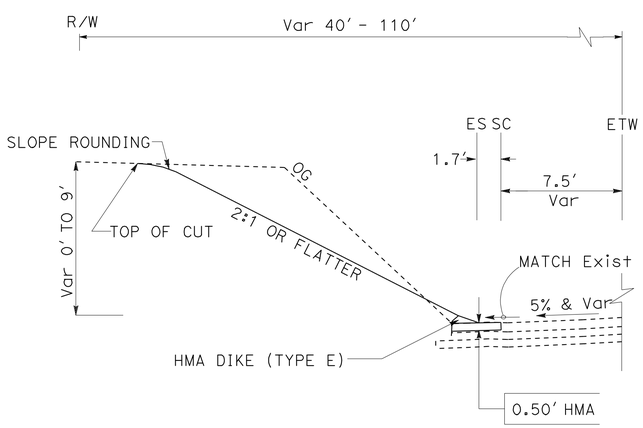

"A" 288+50.00 TO 289+00.00 L†
"A" 292+50.00 TO 294+50.00 L†
"A" 303+50.00 TO 304+50.00 L†
"A" 307+18.44 TO 307+33.86 L†
"A" 307+86.00 TO 310+50.00 L†

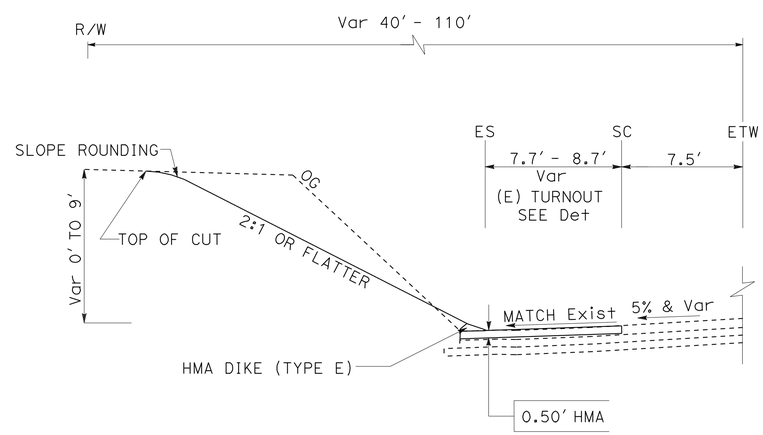

"A" 289+00.00 TO 289+65.50 L†
"A" 310+50.00 TO 311+37.66 L†

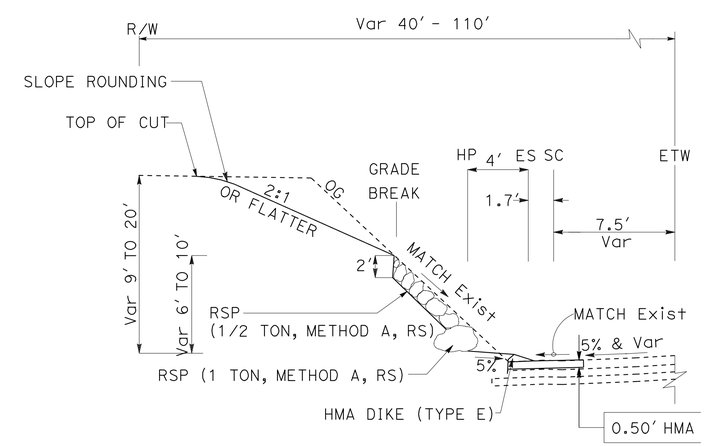

"A" 298+50.00 TO 301+50.00 L†
"A" 306+50.00 TO 307+18.44 L†

TYPICAL CROSS SECTIONS

NO SCALE

X-3

ROUTE 267

REVISED BY	DATE REVISED
CHARLES WOOTEN	RYAN KOHAGURA
CALCULATED-DESIGNED BY	CHECKED BY
FUNCTIONAL SUPERVISOR	MASTRI ALVANDI

STATE OF CALIFORNIA - DEPARTMENT OF TRANSPORTATION
Caltrans PROJECT DEVELOPMENT

LAST REVISION 12-09-09 | DATE PLOTTED => 12-APR-2010 | TIME PLOTTED => 13:18

Dist	COUNTY	ROUTE	POST MILES TOTAL PROJECT	SHEET No.	TOTAL SHEETS
03	Pla	267	4.9/6.7	5	74

12-10-09
REGISTERED CIVIL ENGINEER DATE

4-12-10
PLANS APPROVAL DATE

REGISTERED PROFESSIONAL ENGINEER
RYAN S. KOHAGURA
No. C58535
Exp. 12-31-10
CIVIL
STATE OF CALIFORNIA

THE STATE OF CALIFORNIA OR ITS OFFICERS OR AGENTS SHALL NOT BE RESPONSIBLE FOR THE ACCURACY OR COMPLETENESS OF SCANNED COPIES OF THIS PLAN SHEET.

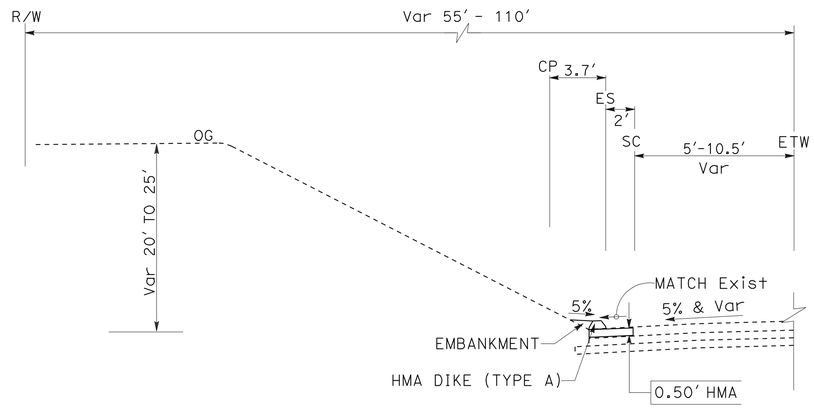

"A" 352+50.00 TO 354+50.00 Lt

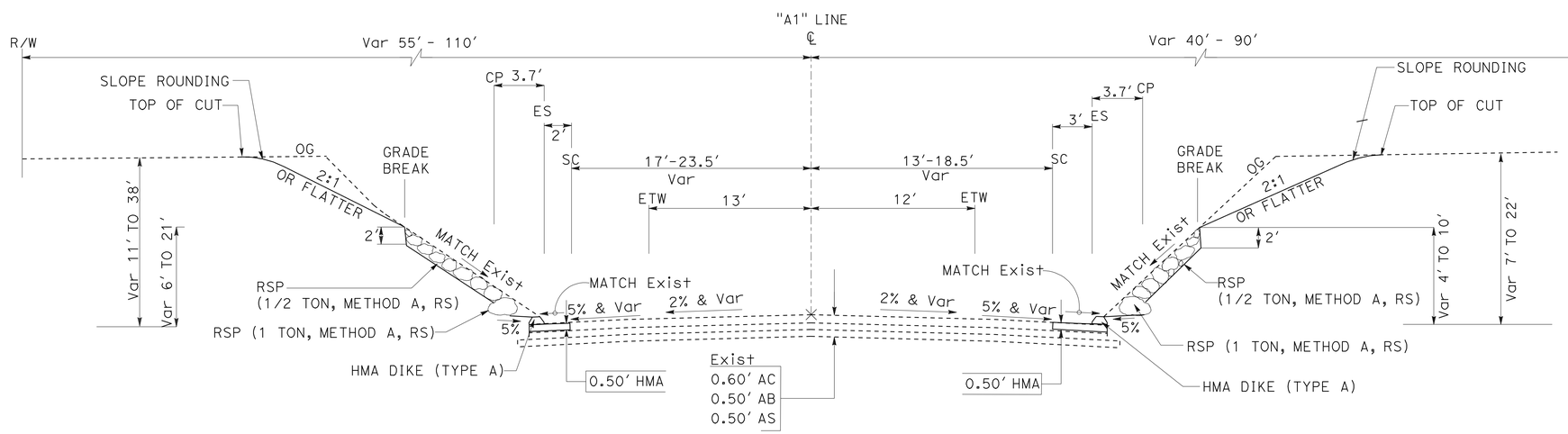

"A" 334+50.00 TO 352+50.00 Lt

"A" 335+00.00 TO 354+50.00 Rt

TYPICAL CROSS SECTIONS

NO SCALE

ROUTE 267

X-4

STATE OF CALIFORNIA - DEPARTMENT OF TRANSPORTATION
Caltrans PROJECT DEVELOPMENT

FUNCTIONAL SUPERVISOR: MASTRI ALVANDI
CALCULATED-DESIGNED BY: CHARLES WOOTEN
CHECKED BY: RYAN KOHAGURA
REVISED BY / DATE REVISED

LAST REVISION 12-09-09
DATE PLOTTED => 12-APR-2010
TIME PLOTTED => 13:18

Dist	COUNTY	ROUTE	POST MILES TOTAL PROJECT	SHEET No.	TOTAL SHEETS
03	Pla	267	4.9/6.7	6	74

REGISTERED CIVIL ENGINEER 12-10-09 DATE

4-12-10
PLANS APPROVAL DATE

REGISTERED PROFESSIONAL ENGINEER RYAN S. KOHAGURA No. C58535 Exp. 12-31-10 CIVIL STATE OF CALIFORNIA

THE STATE OF CALIFORNIA OR ITS OFFICERS OR AGENTS SHALL NOT BE RESPONSIBLE FOR THE ACCURACY OR COMPLETENESS OF SCANNED COPIES OF THIS PLAN SHEET.

NOTES:

1. FOR COMPLETE RIGHT OF WAY AND ACCESS DATA, SEE RIGHT OF WAY RECORD MAPS AT DISTRICT OFFICE.

2. SOIL DISTURBANCE LIMITS WILL EXTEND 13′ OUTSIDE THE CUT/FILL LIMITS FOR CLEARING & GRUBBING.

LEGEND:

- CUT LIMITS
- FILL LIMITS
- RIGHT OF WAY EASEMENT
- RIGHT OF WAY
- DIRECTION OF TRAFFIC
- HMA DIKE
- SAWCUT
- RSP
- ESA FENCING
- POTHOLE (PH) LOCATION
- ELECTRONIC DETECTION (ED) LOCATION

ABBREVIATIONS

ESA	ENVIRONMENTAL SENSITIVE AREA
RS	ROCK STAIN
BEG	BEGIN

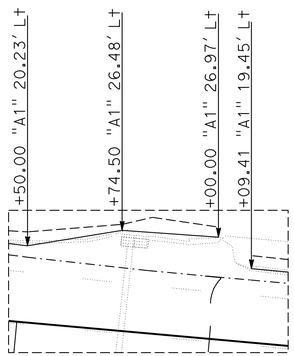

DETAIL "A"

SCALE: 1" = 20′

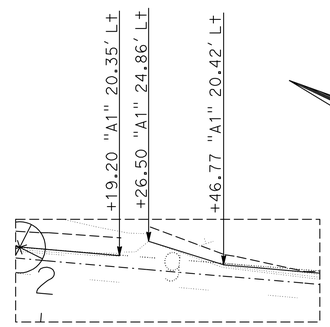

DETAIL "B"

SCALE: 1" = 20′

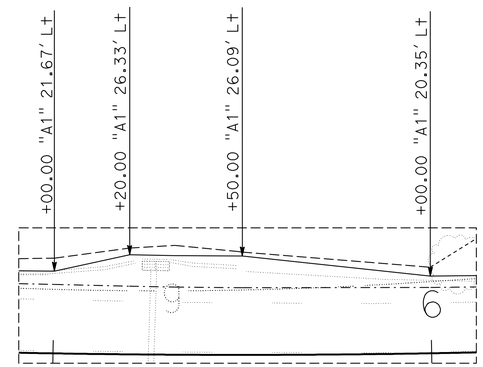

DETAIL "C"

SCALE: 1" = 20′

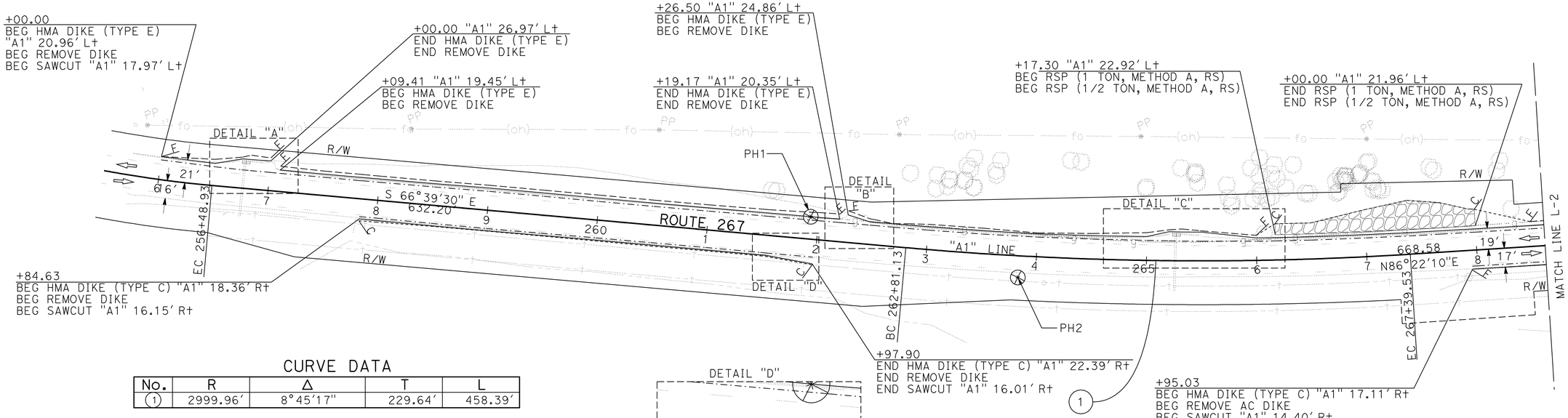

CURVE DATA

No.	R	Δ	T	L
1	2999.96′	8°45′17"	229.64′	458.39′

POTHOLING INFORMATION

No.	UTILITY	STATION	OFFSET	OG ELEVATION	DEPTH (FT)
PH1	8" GAS	261+92.74	20.22′ L	6501.84	6.42′
PH2	TEL	263+83.84	19.70′ R	6515.42	3.75′

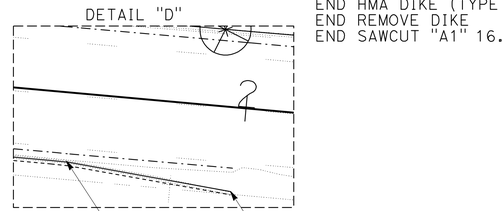

LAYOUT

SCALE: 1" = 50′

L-1

STATE OF CALIFORNIA - DEPARTMENT OF TRANSPORTATION
Caltrans PROJECT DEVELOPMENT

FUNCTIONAL SUPERVISOR: MASTRI ALVANDI
CHARLES WOOTEN | REVISED BY | DATE REVISED
RYAN KOHAGURA | CALCULATED-DESIGNED BY | CHECKED BY

LAST REVISION 12-09-09 | DATE PLOTTED => 12-APR-2010 | TIME PLOTTED => 13:18

Dist	COUNTY	ROUTE	POST MILES TOTAL PROJECT	SHEET No.	TOTAL SHEETS
03	Pla	267	4.9/6.7	7	74

REGISTERED CIVIL ENGINEER 12-10-09 DATE

4-12-10
PLANS APPROVAL DATE

REGISTERED PROFESSIONAL ENGINEER RYAN S. KOHAGURA No. C58535 Exp. 12-31-10 CIVIL STATE OF CALIFORNIA

THE STATE OF CALIFORNIA OR ITS OFFICERS OR AGENTS SHALL NOT BE RESPONSIBLE FOR THE ACCURACY OR COMPLETENESS OF SCANNED COPIES OF THIS PLAN SHEET.

NOTE:

1. FOR COMPLETE RIGHT OF WAY AND ACCESS DATA, SEE RIGHT OF WAY RECORD MAPS AT DISTRICT OFFICE.

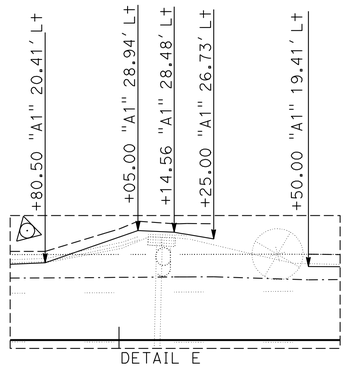

DETAIL E

SCALE: 1" = 20'

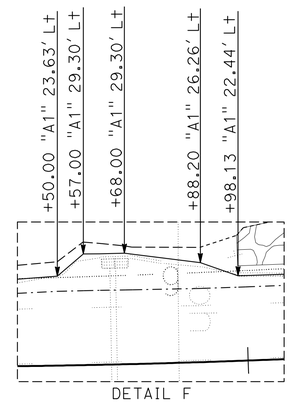

DETAIL F

SCALE: 1" = 20'

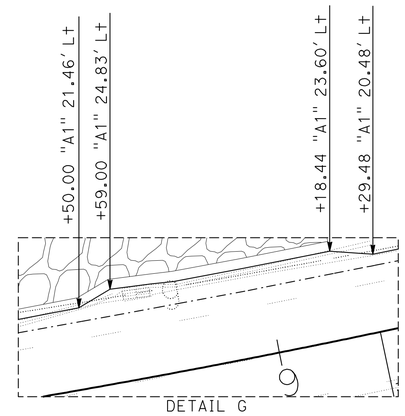

DETAIL G

SCALE: 1" = 20'

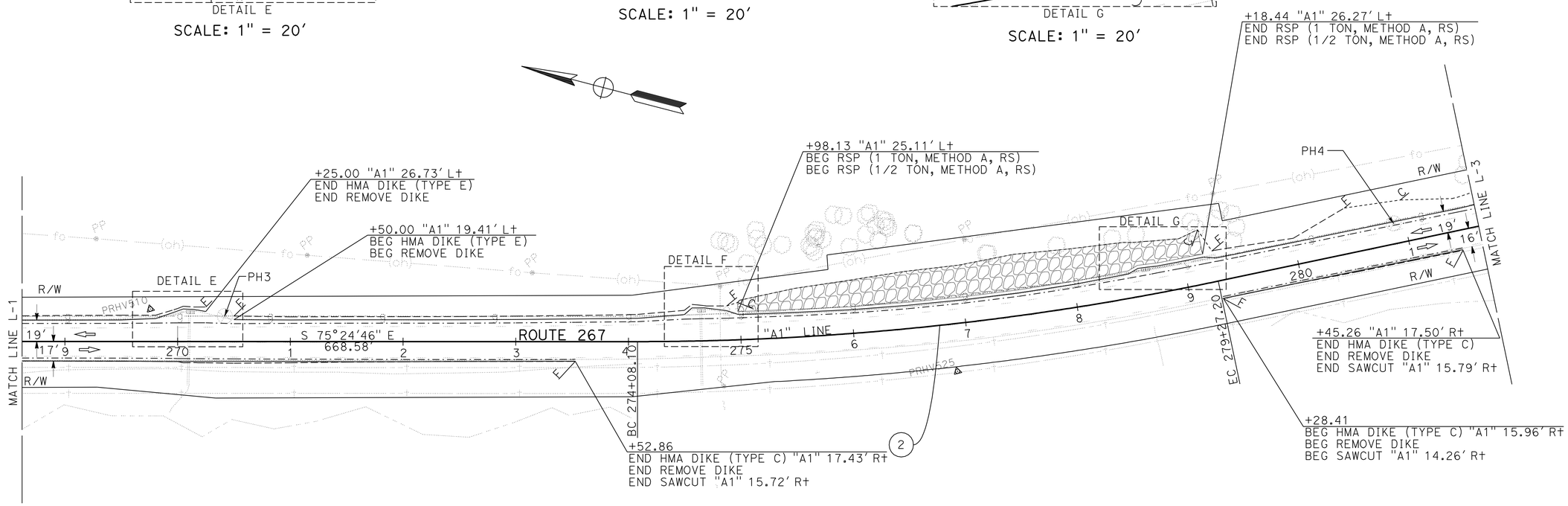

CURVE DATA

No.	R	Δ	T	L
2	2500.00'	11°53'48"	260.48'	519.09'

POTHOLING INFORMATION

No.	UTILITY	STATION	OFFSET	OG ELEVATION	DEPTH (FT)
PH3	8" GAS	270+41.85	22.65' L	6554.90	6.83
PH4	8" GAS	280+90.02	18.02' L	6610.33	4.17

LAYOUT

SCALE: 1" = 50'

L-2

REVISED BY	DATE REVISED
CHARLES WOOTEN	RYAN KOHAGURA
CALCULATED-DESIGNED BY	CHECKED BY
FUNCTIONAL SUPERVISOR	MASTRI ALVANDI

STATE OF CALIFORNIA - DEPARTMENT OF TRANSPORTATION
Caltrans PROJECT DEVELOPMENT

LAST REVISION 12-09-09 DATE PLOTTED => 12-APR-2010 TIME PLOTTED => 13:18

Dist	COUNTY	ROUTE	POST MILES TOTAL PROJECT	SHEET No.	TOTAL SHEETS
03	Pla	267	4.9/6.7	8	74

REGISTERED CIVIL ENGINEER 12-10-09 DATE

4-12-10
PLANS APPROVAL DATE

REGISTERED PROFESSIONAL ENGINEER RYAN S. KOHAGURA No. C58535 Exp. 12-31-10 CIVIL STATE OF CALIFORNIA

THE STATE OF CALIFORNIA OR ITS OFFICERS OR AGENTS SHALL NOT BE RESPONSIBLE FOR THE ACCURACY OR COMPLETENESS OF SCANNED COPIES OF THIS PLAN SHEET.

NOTE:

1. FOR COMPLETE RIGHT OF WAY AND ACCESS DATA, SEE RIGHT OF WAY RECORD MAPS AT DISTRICT OFFICE.

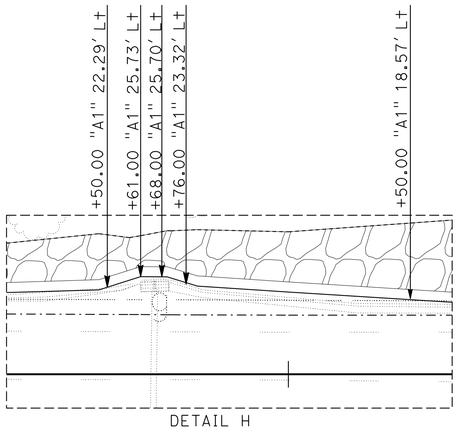

DETAIL H

SCALE: 1" = 20'

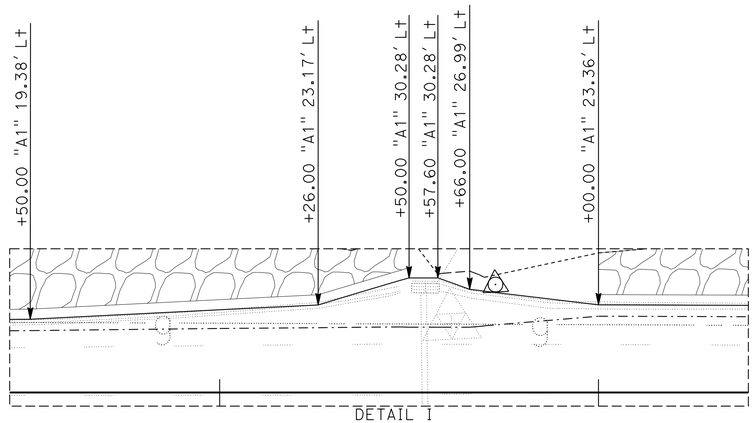

DETAIL I

SCALE: 1" = 20'

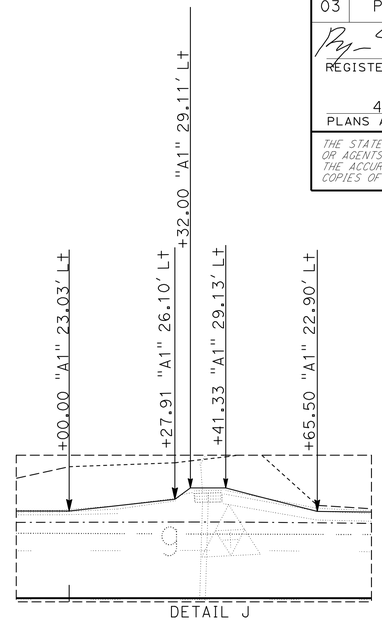

DETAIL J

SCALE: 1" = 20'

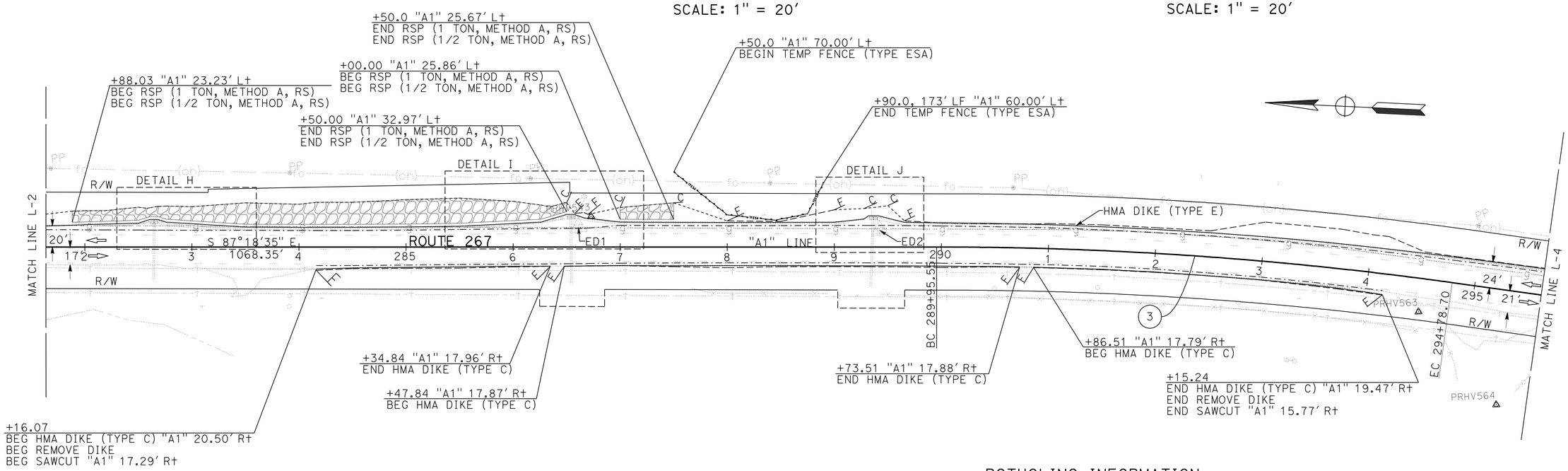

CURVE DATA

No.	R	Δ	T	L
3	3500.01'	7°54'33"	241.96'	483.15'

POTHOLING INFORMATION

No.	UTILITY	STATION	OFFSET	OG ELEVATION	DEPTH (FT)
ED1	8" GAS	270+41.85	22.65' L	6651.29	5.2
ED2	8" GAS	280+90.02	18.02' L	6672.72	6.4

LAYOUT

SCALE: 1" = 50'

L-3

STATE OF CALIFORNIA - DEPARTMENT OF TRANSPORTATION
Caltrans PROJECT DEVELOPMENT

FUNCTIONAL SUPERVISOR: MASTRI ALVANDI
CHARLES WOOTEN | REVISED BY | DATE REVISED
RYAN KOHAGURA | CALCULATED-DESIGNED BY | CHECKED BY

LAST REVISION 12-09-09 | DATE PLOTTED => 12-APR-2010 | TIME PLOTTED => 13:18

Dist	COUNTY	ROUTE	POST MILES TOTAL PROJECT	SHEET No.	TOTAL SHEETS
03	Pla	267	4.9/6.7	9	74

REGISTERED CIVIL ENGINEER 12-10-09 DATE

4-12-10
PLANS APPROVAL DATE

REGISTERED PROFESSIONAL ENGINEER
RYAN S. KOHAGURA
No. C58535
Exp. 12-31-10
CIVIL
STATE OF CALIFORNIA

THE STATE OF CALIFORNIA OR ITS OFFICERS OR AGENTS SHALL NOT BE RESPONSIBLE FOR THE ACCURACY OR COMPLETENESS OF SCANNED COPIES OF THIS PLAN SHEET.

NOTE:

1. FOR COMPLETE RIGHT OF WAY AND ACCESS DATA, SEE RIGHT OF WAY RECORD MAPS AT DISTRICT OFFICE.

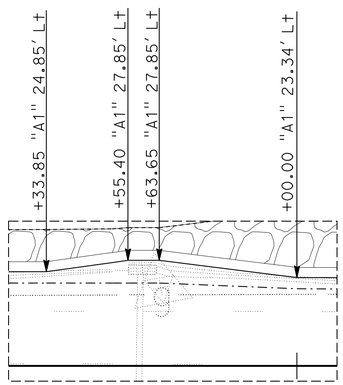

DETAIL K

SCALE: 1" = 20'

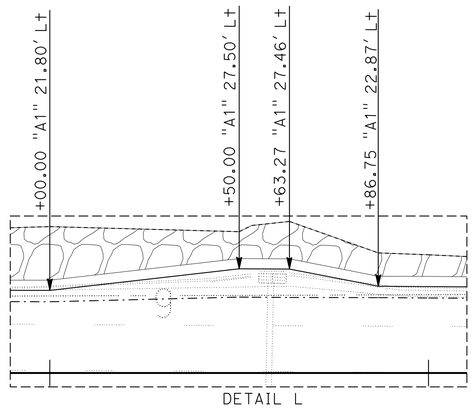

DETAIL L

SCALE: 1" = 20'

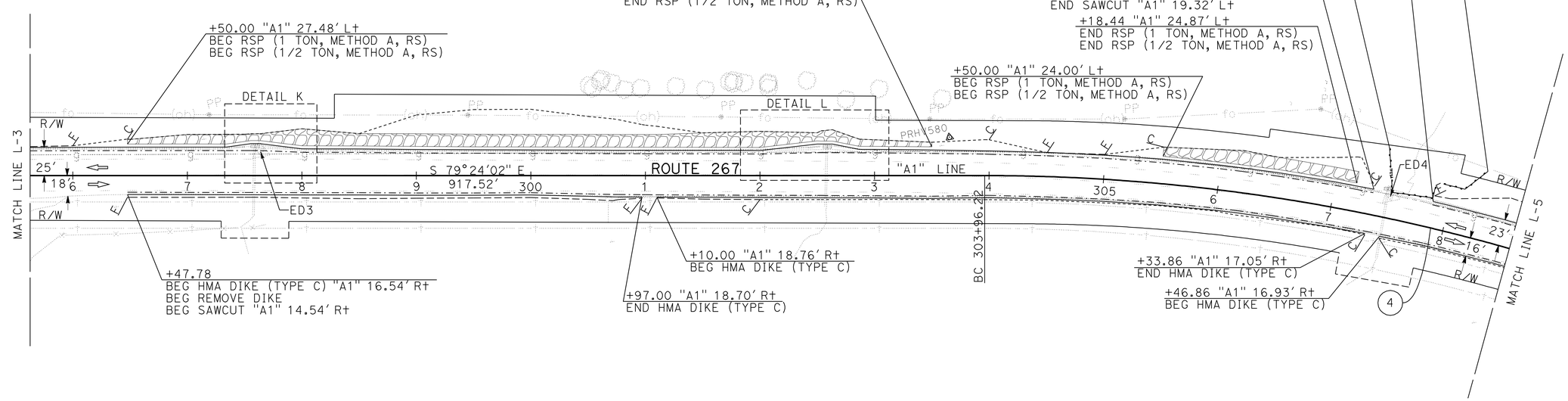

CURVE DATA

No.	R	Δ	T	L
4	1680.00'	27°30'27"	411.21'	806.56'

POTHOLING INFORMATION

No.	UTILITY	STATION	OFFSET	OG ELEVATION	DEPTH (FT)
ED3	8" GAS	297+64.04	20.66' L	6728.58	7.2
ED4	8" GAS	307+49.06	19.37' L	6817.65	5.2

LAYOUT
SCALE: 1" = 50'

L-4

REVISED BY	DATE REVISED
CHARLES WOOTEN	RYAN KOHAGURA

CALCULATED-DESIGNED BY | CHECKED BY

FUNCTIONAL SUPERVISOR: MASTRI ALVANDI

STATE OF CALIFORNIA - DEPARTMENT OF TRANSPORTATION
Caltrans PROJECT DEVELOPMENT

LAST REVISION 12-09-09 | DATE PLOTTED => 12-APR-2010 | TIME PLOTTED => 13:18

Dist	COUNTY	ROUTE	POST MILES TOTAL PROJECT	SHEET No.	TOTAL SHEETS
03	Pla	267	4.9/6.7	10	74

REGISTERED CIVIL ENGINEER 12-10-09 DATE

4-12-10
PLANS APPROVAL DATE

REGISTERED PROFESSIONAL ENGINEER RYAN S. KOHAGURA No. C58535 Exp. 12-31-10 CIVIL STATE OF CALIFORNIA

THE STATE OF CALIFORNIA OR ITS OFFICERS OR AGENTS SHALL NOT BE RESPONSIBLE FOR THE ACCURACY OR COMPLETENESS OF SCANNED COPIES OF THIS PLAN SHEET.

NOTE:

1. FOR COMPLETE RIGHT OF WAY AND ACCESS DATA, SEE RIGHT OF WAY RECORD MAPS AT DISTRICT OFFICE.

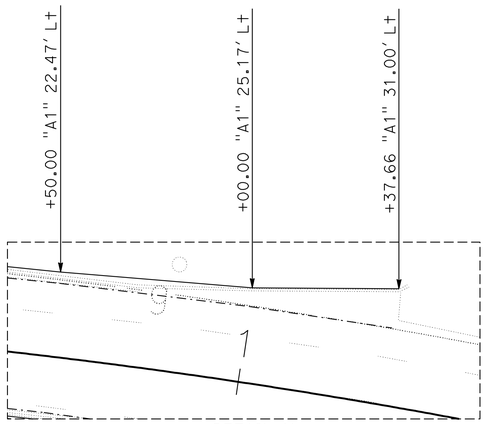

DETAIL M

SCALE: 1" = 20'

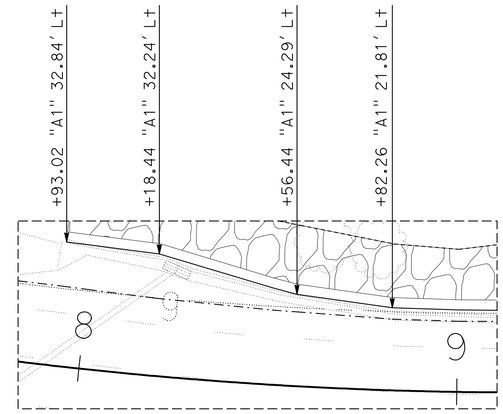

DETAIL N

SCALE: 1" = 20'

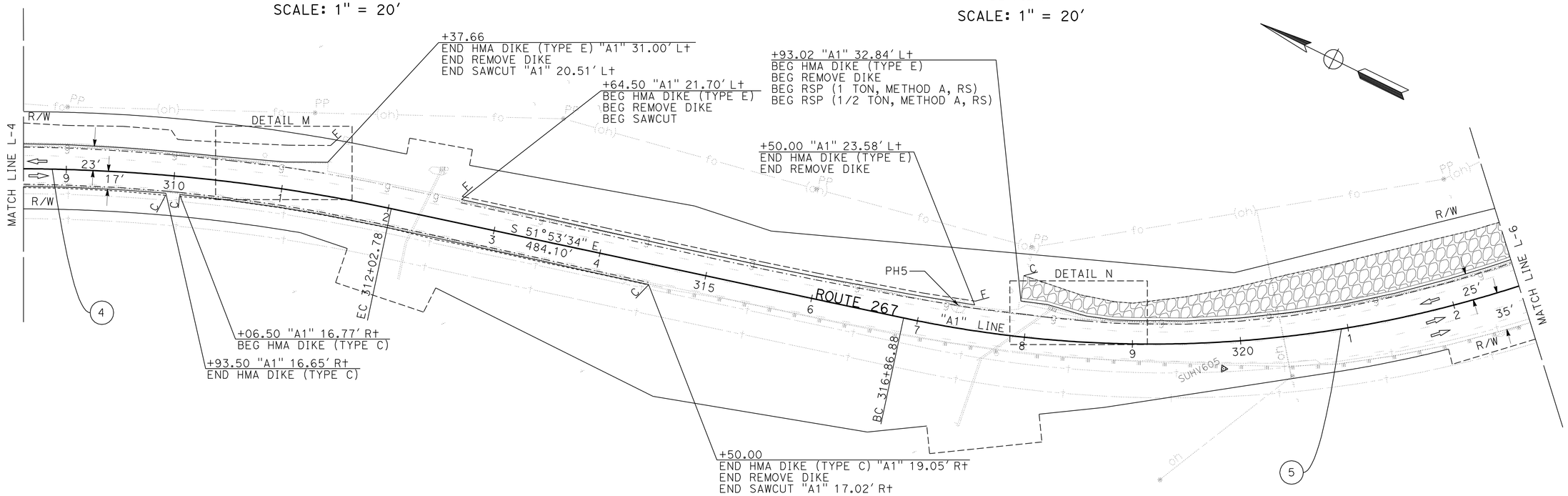

CURVE DATA

No.	R	Δ	T	L
4	1680.00'	27°30'27"	411.21'	806.56'
5	1100.00'	40°39'36"	407.56'	780.62'

POTHOLING INFORMATION

No.	UTILITY	STATION	OFFSET	OG ELEVATION	DEPTH (FT)
PH5	8" GAS	317+35.00	20.82' L	6904.08	3.25

LAYOUT
SCALE: 1" = 50'

L-5

STATE OF CALIFORNIA - DEPARTMENT OF TRANSPORTATION
Caltrans PROJECT DEVELOPMENT

FUNCTIONAL SUPERVISOR: MASTRI ALVANDI
CALCULATED-DESIGNED BY: CHARLES WOOTEN
CHECKED BY: RYAN KOHAGURA
REVISED BY
DATE REVISED

LAST REVISION 12-09-09 DATE PLOTTED => 12-APR-2010 TIME PLOTTED => 13:18

Dist	COUNTY	ROUTE	POST MILES TOTAL PROJECT	SHEET No.	TOTAL SHEETS
03	Pla	267	4.9/6.7	11	74

REGISTERED CIVIL ENGINEER 12-10-09 DATE

4-12-10
PLANS APPROVAL DATE

REGISTERED PROFESSIONAL ENGINEER
RYAN S. KOHAGURA
No. C58535
Exp. 12-31-10
CIVIL
STATE OF CALIFORNIA

THE STATE OF CALIFORNIA OR ITS OFFICERS OR AGENTS SHALL NOT BE RESPONSIBLE FOR THE ACCURACY OR COMPLETENESS OF SCANNED COPIES OF THIS PLAN SHEET.

NOTE:

1. FOR COMPLETE RIGHT OF WAY AND ACCESS DATA, SEE RIGHT OF WAY RECORD MAPS AT DISTRICT OFFICE.

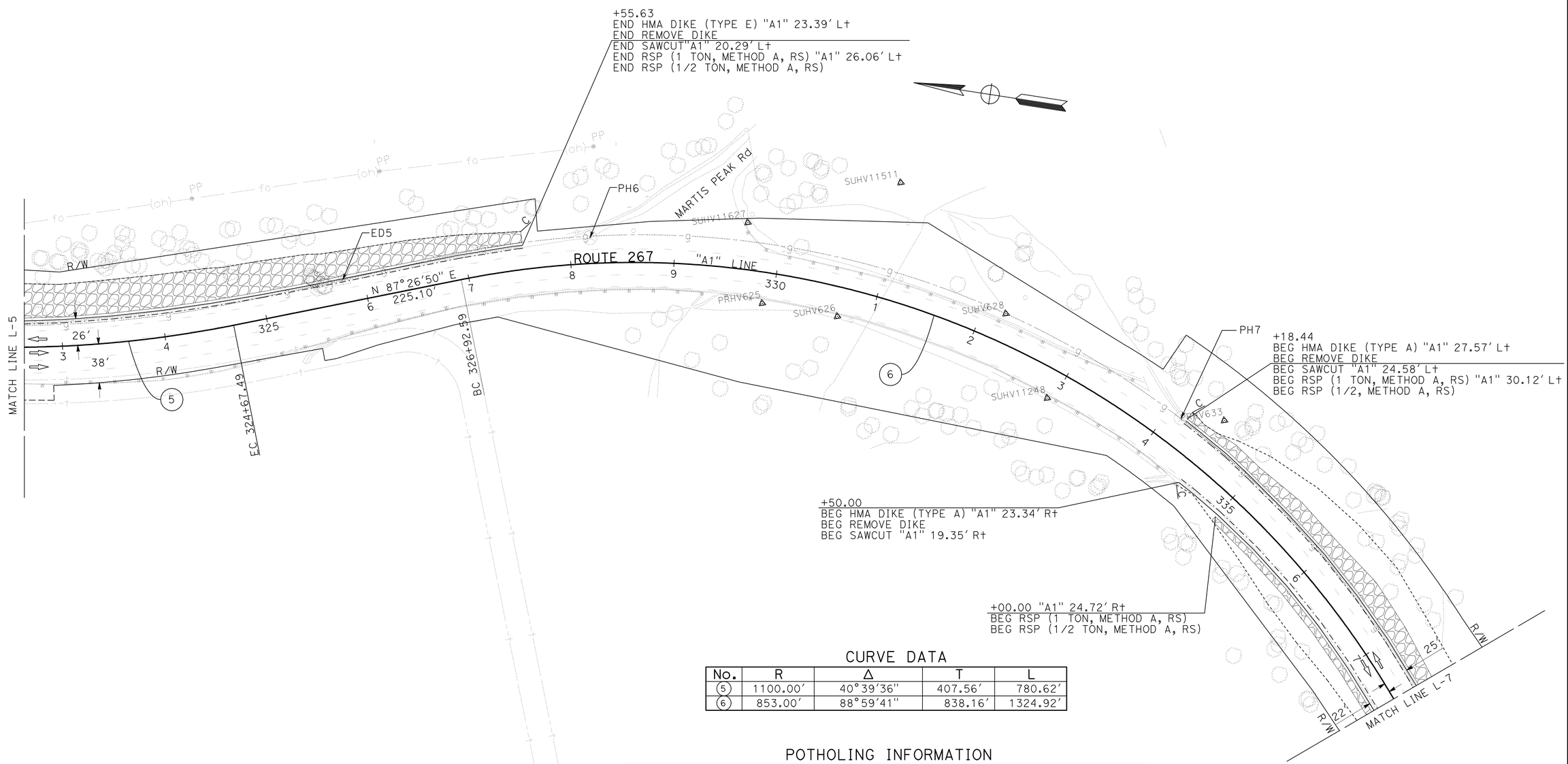

CURVE DATA

No.	R	Δ	T	L
5	1100.00'	40°39'36"	407.56'	780.62'
6	853.00'	88°59'41"	838.16'	1324.92'

POTHOLING INFORMATION

No.	UTILITY	STATION	OFFSET	OG ELEVATION	DEPTH (FT)
ED5	8" GAS	325+79.69	22.18' L	6981.64	4.1
PH6	8" GAS	328+19.70	25.06' L	7004.24	4.29
PH7	8" GAS	334+13.36	26.92' L	7057.49	3.83

LAYOUT

SCALE: 1" = 50'

L-6

STATE OF CALIFORNIA - DEPARTMENT OF TRANSPORTATION
Caltrans PROJECT DEVELOPMENT

FUNCTIONAL SUPERVISOR: MASTRI ALVANDI
CALCULATED-DESIGNED BY: CHARLES WOOTEN
CHECKED BY: RYAN KOHAGURA
REVISED BY
DATE REVISED

LAST REVISION 12-09-09
DATE PLOTTED => 12-APR-2010
TIME PLOTTED => 13:18

Dist	COUNTY	ROUTE	POST MILES TOTAL PROJECT	SHEET No.	TOTAL SHEETS
03	Pla	267	4.9/6.7	12	74

REGISTERED CIVIL ENGINEER 12-10-09 DATE

4-12-10
PLANS APPROVAL DATE

REGISTERED PROFESSIONAL ENGINEER
RYAN S. KOHAGURA
No. C58535
Exp. 12-31-10
CIVIL
STATE OF CALIFORNIA

THE STATE OF CALIFORNIA OR ITS OFFICERS OR AGENTS SHALL NOT BE RESPONSIBLE FOR THE ACCURACY OR COMPLETENESS OF SCANNED COPIES OF THIS PLAN SHEET.

NOTE:

1. FOR COMPLETE RIGHT OF WAY AND ACCESS DATA, SEE RIGHT OF WAY RECORD MAPS AT DISTRICT OFFICE.

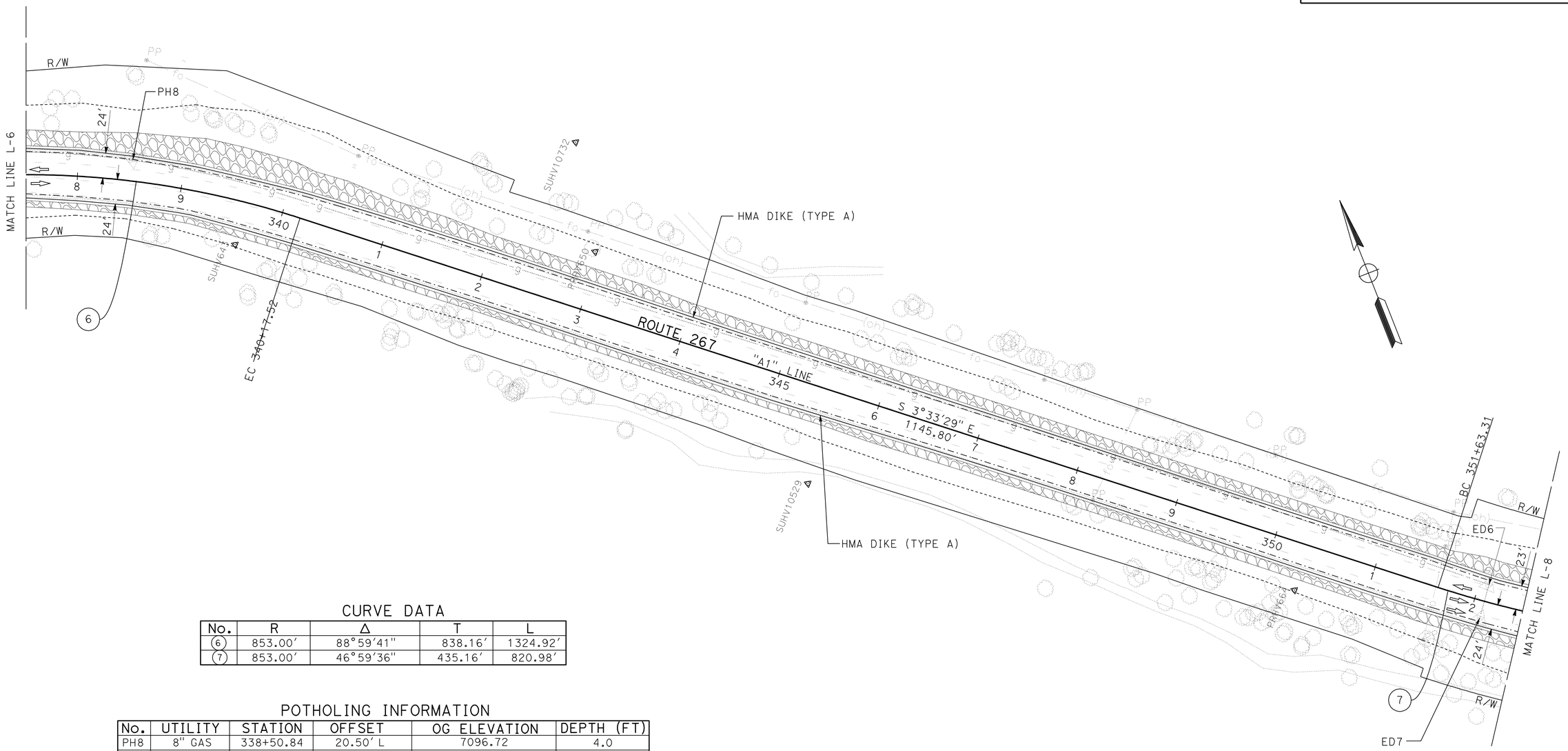

CURVE DATA

No.	R	Δ	T	L
6	853.00′	88°59′41"	838.16′	1324.92′
7	853.00′	46°59′36"	435.16′	820.98′

POTHOLING INFORMATION

No.	UTILITY	STATION	OFFSET	OG ELEVATION	DEPTH (FT)
PH8	8" GAS	338+50.84	20.50′ L	7096.72	4.0
ED6	8" GAS	352+09.54	16.57′ L	7178.34	4.33
ED7	8" GAS	352+09.45	16.88′ R	7180.26	4.58

LAYOUT
SCALE: 1" = 50′

L-7

STATE OF CALIFORNIA - DEPARTMENT OF TRANSPORTATION
Caltrans PROJECT DEVELOPMENT

FUNCTIONAL SUPERVISOR: MASTRI ALVANDI
CALCULATED-DESIGNED BY: CHARLES WOOTEN
CHECKED BY: RYAN KOHAGURA
REVISED BY
DATE REVISED

LAST REVISION 12-09-09
DATE PLOTTED => 12-APR-2010
TIME PLOTTED => 13:18

Dist	COUNTY	ROUTE	POST MILES TOTAL PROJECT	SHEET No.	TOTAL SHEETS
03	Pla	267	4.9/6.7	13	74

REGISTERED CIVIL ENGINEER 12-10-09 DATE

4-12-10
PLANS APPROVAL DATE

REGISTERED PROFESSIONAL ENGINEER
RYAN S. KOHAGURA
No. C58535
Exp. 12-31-10
CIVIL
STATE OF CALIFORNIA

THE STATE OF CALIFORNIA OR ITS OFFICERS OR AGENTS SHALL NOT BE RESPONSIBLE FOR THE ACCURACY OR COMPLETENESS OF SCANNED COPIES OF THIS PLAN SHEET.

NOTE:

1. FOR COMPLETE RIGHT OF WAY AND ACCESS DATA, SEE RIGHT OF WAY RECORD MAPS AT DISTRICT OFFICE.

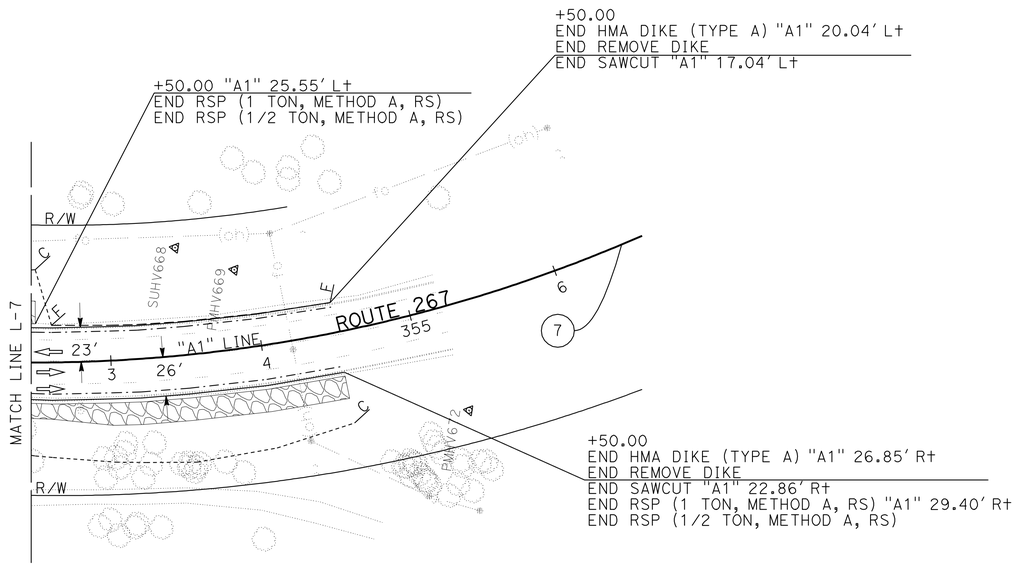

CURVE DATA

No.	R	Δ	T	L
7	853.00'	46°59'36"	435.16'	820.98'

LAYOUT

SCALE: 1" = 50'

L-8

STATE OF CALIFORNIA - DEPARTMENT OF TRANSPORTATION
Caltrans PROJECT DEVELOPMENT

FUNCTIONAL SUPERVISOR: MASTRI ALVANDI
CALCULATED-DESIGNED BY: RYAN KOHAGURA
CHECKED BY: CHARLES WOOTEN
REVISED BY
DATE REVISED

LAST REVISION 12-09-09
DATE PLOTTED => 12-APR-2010
TIME PLOTTED => 13:19

Dist	COUNTY	ROUTE	POST MILES TOTAL PROJECT	SHEET No.	TOTAL SHEETS
03	Pla	267	4.9/6.7	14	74

LICENSED LANDSCAPE ARCHITECT

4-12-10
PLANS APPROVAL DATE

LICENSED LANDSCAPE ARCHITECT
JAMES G. WILLIAMSON
No. 5415
Signature
02-28-12
Renewal Date
12-10-09
Date
STATE OF CALIFORNIA

THE STATE OF CALIFORNIA OR ITS OFFICERS OR AGENTS SHALL NOT BE RESPONSIBLE FOR THE ACCURACY OR COMPLETENESS OF SCANNED COPIES OF THIS PLAN SHEET.

NOTE:

FOR COMPLETE RIGHT OF WAY AND ACCURATE ACCESS DATA, SEE RIGHT OF WAY RECORD MAPS AT DISTRICT OFFICE.

LEGEND:

- EROSION CONTROL (TYPE 1)
  - COMPOST, INCORPORATE
  - EROSION CONTROL (HYDROSEED)
  - ROLLED EROSION CONTROL PRODUCT (NETTING) (TYPE A)
- EROSION CONTROL (TYPE 2)
  - EROSION CONTROL (HYDROSEED)
- EROSION CONTROL (TYPE 3)
  - EROSION CONTROL (HYDROSEED)
  - ROLLED EROSION CONTROL PRODUCT (NETTING) (TYPE A)
- APPROXIMATE LOCATION OF PLACED ROCK SLOPE PROTECTION (SEE SHEETS L-1 TO L-8)
- ----- R/W EASEMENT

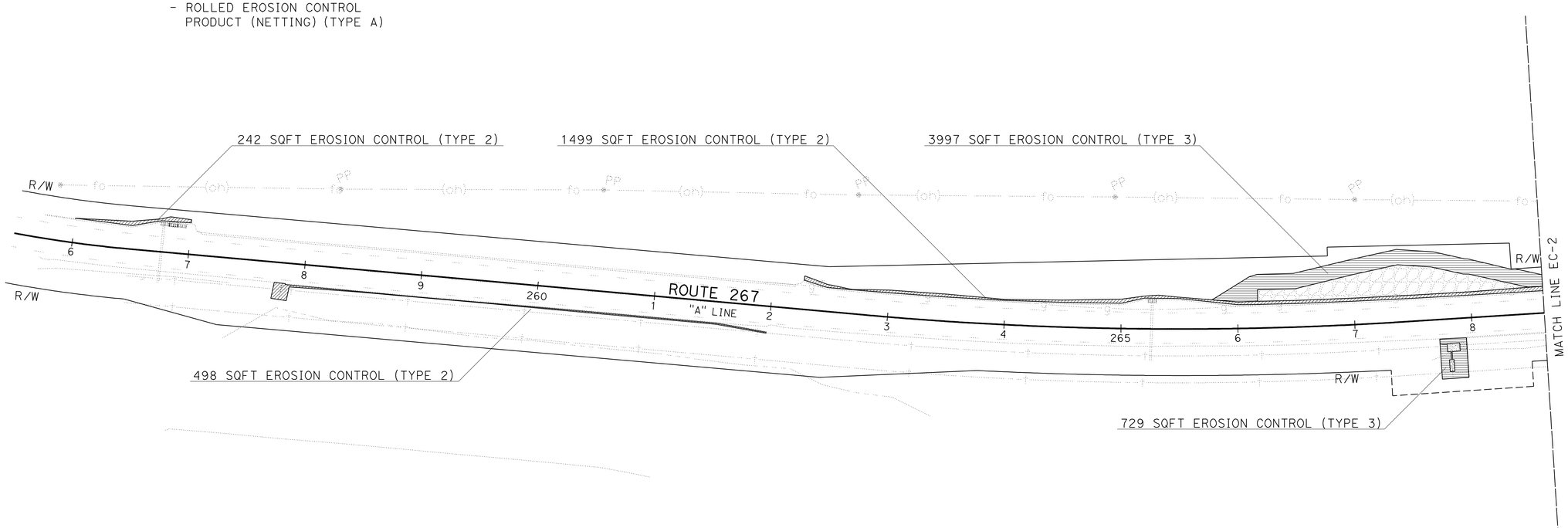

THIS PLAN ACCURATE FOR EROSION CONTROL WORK ONLY.

EROSION CONTROL PLAN

SCALE: 1" = 50'

EC-1

STATE OF CALIFORNIA - DEPARTMENT OF TRANSPORTATION
Caltrans® LANDSCAPE ARCHITECTURE

SENIOR LANDSCAPE ARCHITECT: KENNETH MURRAY
CALCULATED-DESIGNED BY: J. WILLIAMSON
CHECKED BY: KENNETH MURRAY
REVISED BY
DATE REVISED

LAST REVISION 12-10-09
DATE PLOTTED => 12-APR-2010
TIME PLOTTED => 12:43

Dist	COUNTY	ROUTE	POST MILES TOTAL PROJECT	SHEET No.	TOTAL SHEETS
03	Pla	267	4.9/6.7	15	74

LICENSED LANDSCAPE ARCHITECT

4-12-10
PLANS APPROVAL DATE

LICENSED LANDSCAPE ARCHITECT
JAMES G. WILLIAMSON
No. 5415
Signature
02-28-12
Renewal Date
12-10-09
Date
STATE OF CALIFORNIA

THE STATE OF CALIFORNIA OR ITS OFFICERS OR AGENTS SHALL NOT BE RESPONSIBLE FOR THE ACCURACY OR COMPLETENESS OF SCANNED COPIES OF THIS PLAN SHEET.

NOTE:

FOR COMPLETE RIGHT OF WAY AND ACCURATE ACCESS DATA, SEE RIGHT OF WAY RECORD MAPS AT DISTRICT OFFICE.

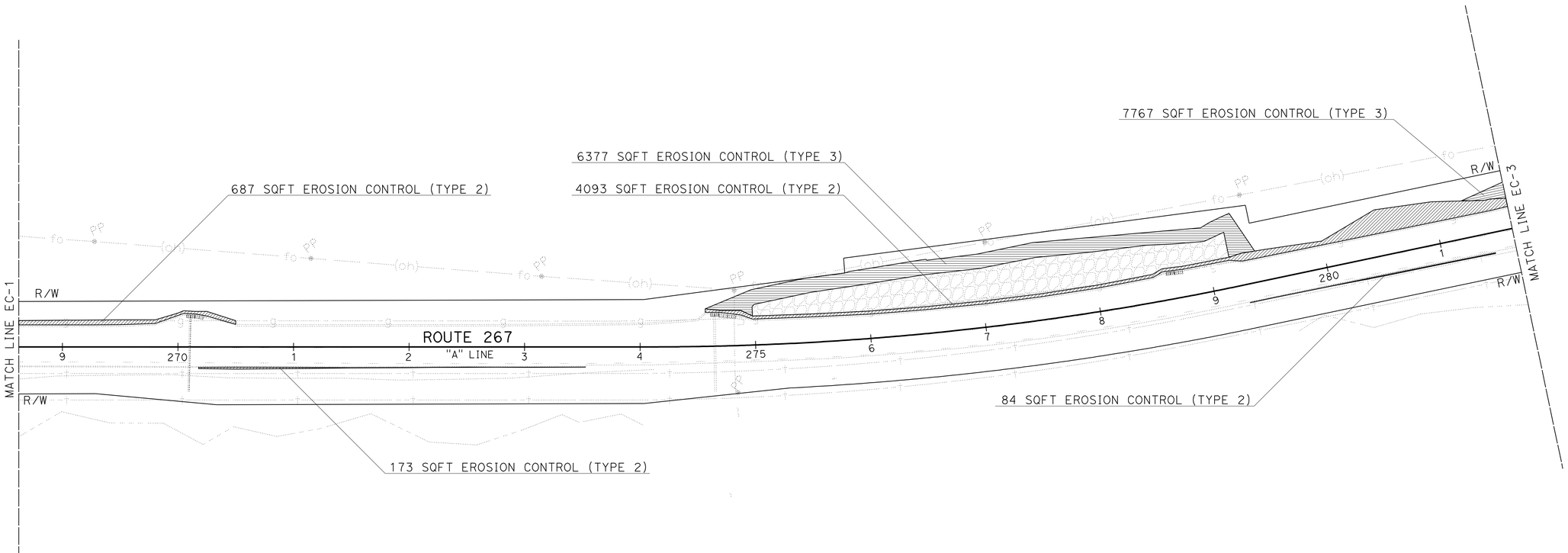

THIS PLAN ACCURATE FOR EROSION CONTROL WORK ONLY.

EROSION CONTROL PLAN

SCALE: 1" = 50'

EC-2

REVISED BY	DATE REVISED

CALCULATED-DESIGNED BY: J. WILLIAMSON
CHECKED BY: KENNETH MURRAY
SENIOR LANDSCAPE ARCHITECT: KENNETH MURRAY

STATE OF CALIFORNIA - DEPARTMENT OF TRANSPORTATION
Caltrans® LANDSCAPE ARCHITECTURE

LAST REVISION 12-10-09
DATE PLOTTED => 12-APR-2010
TIME PLOTTED => 12:43

Dist	COUNTY	ROUTE	POST MILES TOTAL PROJECT	SHEET No.	TOTAL SHEETS
03	Pla	267	4.9/6.7	16	74

LICENSED LANDSCAPE ARCHITECT

4-12-10
PLANS APPROVAL DATE

LICENSED LANDSCAPE ARCHITECT
JAMES G. WILLIAMSON
No. 5415
Signature
02-28-12
Renewal Date
12-10-09
Date
STATE OF CALIFORNIA

THE STATE OF CALIFORNIA OR ITS OFFICERS OR AGENTS SHALL NOT BE RESPONSIBLE FOR THE ACCURACY OR COMPLETENESS OF SCANNED COPIES OF THIS PLAN SHEET.

NOTE:

FOR COMPLETE RIGHT OF WAY AND ACCURATE ACCESS DATA, SEE RIGHT OF WAY RECORD MAPS AT DISTRICT OFFICE.

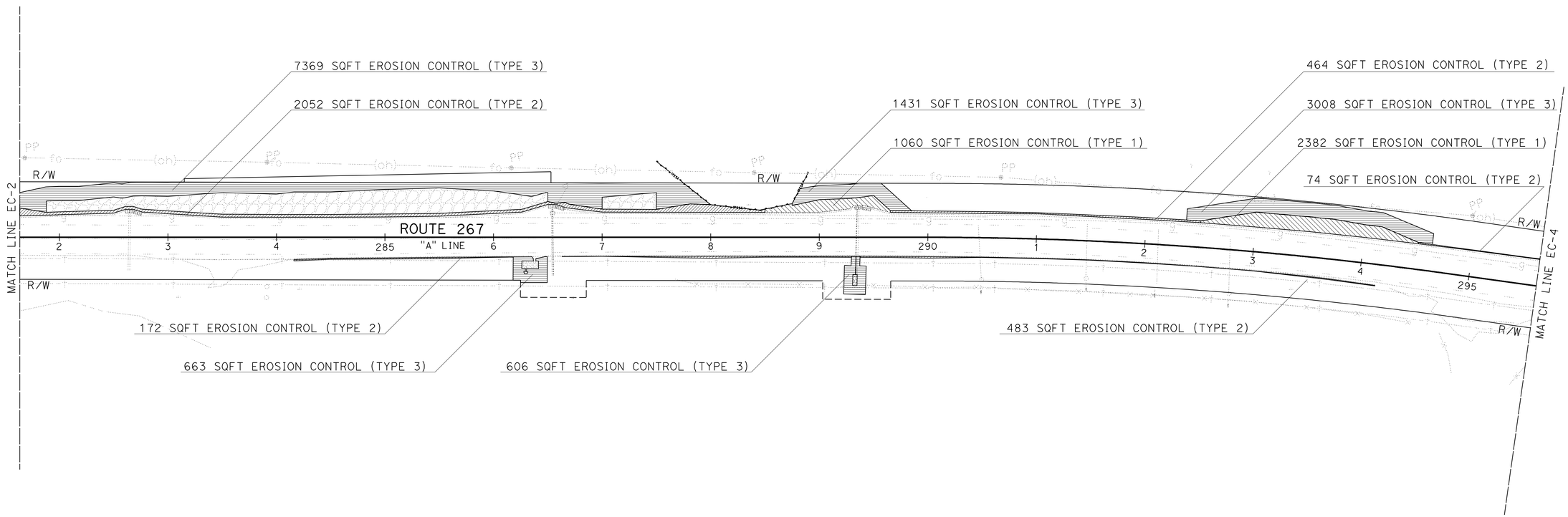

THIS PLAN ACCURATE FOR EROSION CONTROL WORK ONLY.

EROSION CONTROL PLAN

SCALE: 1" = 50'

EC-3

REVISED BY	DATE REVISED

CALCULATED-DESIGNED BY	CHECKED BY
J. WILLIAMSON	KENNETH MURRAY

SENIOR LANDSCAPE ARCHITECT
KENNETH MURRAY

STATE OF CALIFORNIA - DEPARTMENT OF TRANSPORTATION
Caltrans® LANDSCAPE ARCHITECTURE

LAST REVISION 12-10-09
DATE PLOTTED => 12-APR-2010
TIME PLOTTED => 12:44

Dist	COUNTY	ROUTE	POST MILES TOTAL PROJECT	SHEET No.	TOTAL SHEETS
03	Pla	267	4.9/6.7	17	74

LICENSED LANDSCAPE ARCHITECT

4-12-10
PLANS APPROVAL DATE

LICENSED LANDSCAPE ARCHITECT
JAMES G. WILLIAMSON
No. 5415
Signature
02-28-12
Renewal Date
12-10-09
Date
STATE OF CALIFORNIA

THE STATE OF CALIFORNIA OR ITS OFFICERS OR AGENTS SHALL NOT BE RESPONSIBLE FOR THE ACCURACY OR COMPLETENESS OF SCANNED COPIES OF THIS PLAN SHEET.

NOTE:

FOR COMPLETE RIGHT OF WAY AND ACCURATE ACCESS DATA, SEE RIGHT OF WAY RECORD MAPS AT DISTRICT OFFICE.

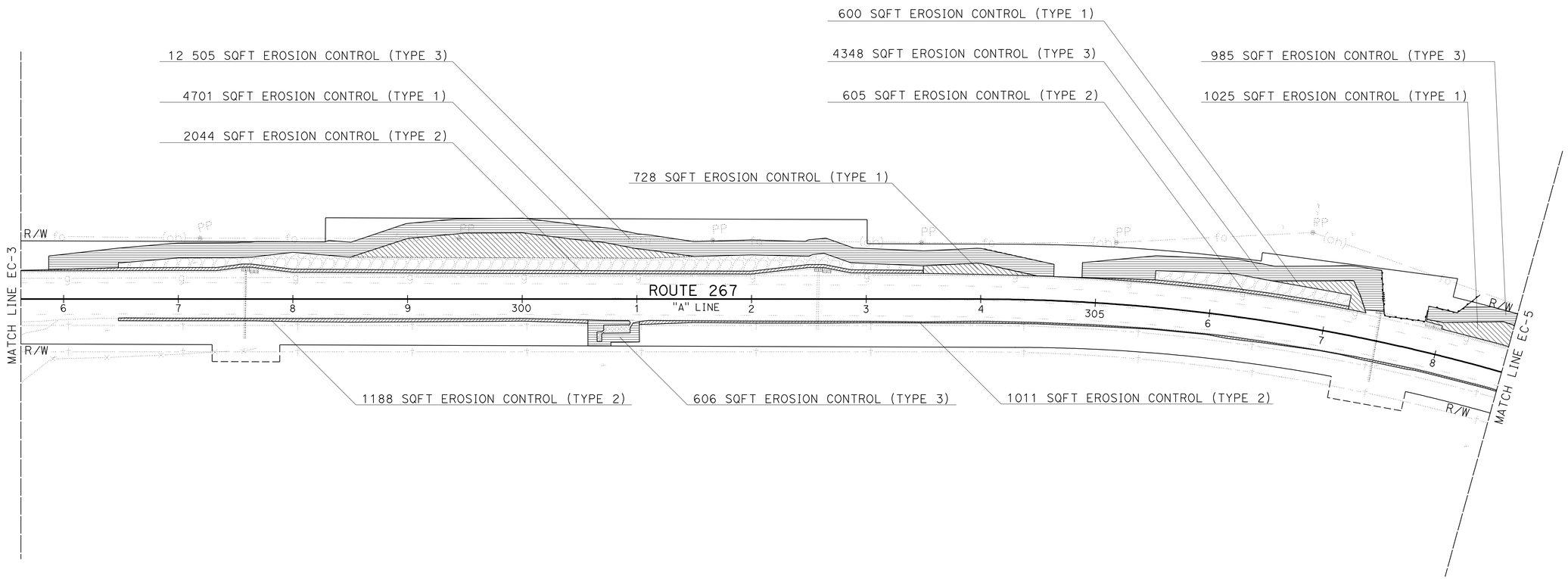

THIS PLAN ACCURATE FOR EROSION CONTROL WORK ONLY.

EROSION CONTROL PLAN

SCALE: 1" = 50'

EC-4

STATE OF CALIFORNIA - DEPARTMENT OF TRANSPORTATION
Caltrans® LANDSCAPE ARCHITECTURE

SENIOR LANDSCAPE ARCHITECT: KENNETH MURRAY

CALCULATED-DESIGNED BY: J. WILLIAMSON
CHECKED BY: KENNETH MURRAY

REVISED BY
DATE REVISED

LAST REVISION 12-10-09
DATE PLOTTED => 12-APR-2010
TIME PLOTTED => 12:50

Dist	COUNTY	ROUTE	POST MILES TOTAL PROJECT	SHEET No.	TOTAL SHEETS
03	Pla	267	4.9/6.7	18	74

LICENSED LANDSCAPE ARCHITECT

4-12-10
PLANS APPROVAL DATE

LICENSED LANDSCAPE ARCHITECT
JAMES G. WILLIAMSON
No. 5415
Signature
02-28-12
Renewal Date
12-10-09
Date
STATE OF CALIFORNIA

THE STATE OF CALIFORNIA OR ITS OFFICERS OR AGENTS SHALL NOT BE RESPONSIBLE FOR THE ACCURACY OR COMPLETENESS OF SCANNED COPIES OF THIS PLAN SHEET.

NOTE:

FOR COMPLETE RIGHT OF WAY AND ACCURATE ACCESS DATA, SEE RIGHT OF WAY RECORD MAPS AT DISTRICT OFFICE.

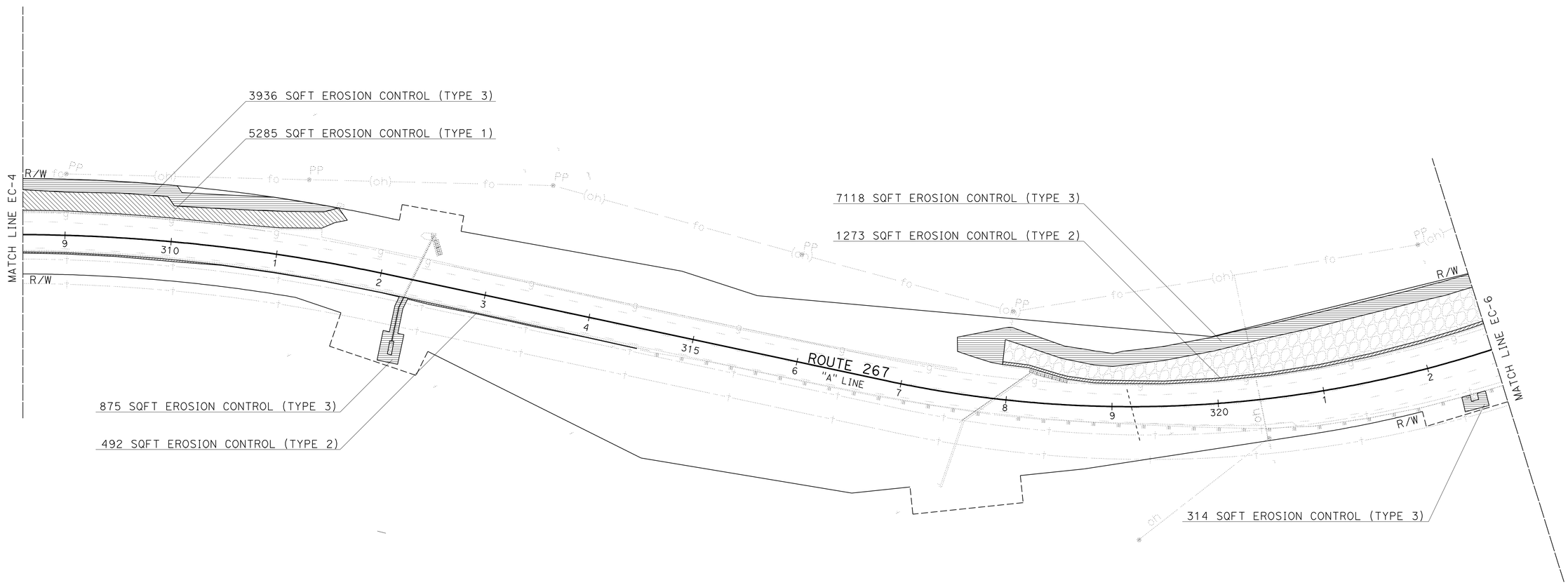

THIS PLAN ACCURATE FOR EROSION CONTROL WORK ONLY.

EROSION CONTROL PLAN

SCALE: 1" = 50'

EC-5

STATE OF CALIFORNIA - DEPARTMENT OF TRANSPORTATION
Caltrans® LANDSCAPE ARCHITECTURE

SENIOR LANDSCAPE ARCHITECT: KENNETH MURRAY

CALCULATED-DESIGNED BY: J. WILLIAMSON
CHECKED BY: KENNETH MURRAY

REVISED BY
DATE REVISED

LAST REVISION 12-10-09
DATE PLOTTED => 12-APR-2010
TIME PLOTTED => 12:50

Dist	COUNTY	ROUTE	POST MILES TOTAL PROJECT	SHEET No.	TOTAL SHEETS
03	Pla	267	4.9/6.7	19	74

LICENSED LANDSCAPE ARCHITECT

4-12-10
PLANS APPROVAL DATE

LICENSED LANDSCAPE ARCHITECT
JAMES G. WILLIAMSON
No. 5415
Signature
02-28-12
Renewal Date
12-10-09
Date
STATE OF CALIFORNIA

THE STATE OF CALIFORNIA OR ITS OFFICERS OR AGENTS SHALL NOT BE RESPONSIBLE FOR THE ACCURACY OR COMPLETENESS OF SCANNED COPIES OF THIS PLAN SHEET.

NOTE:
FOR COMPLETE RIGHT OF WAY AND ACCURATE ACCESS DATA, SEE RIGHT OF WAY RECORD MAPS AT DISTRICT OFFICE.

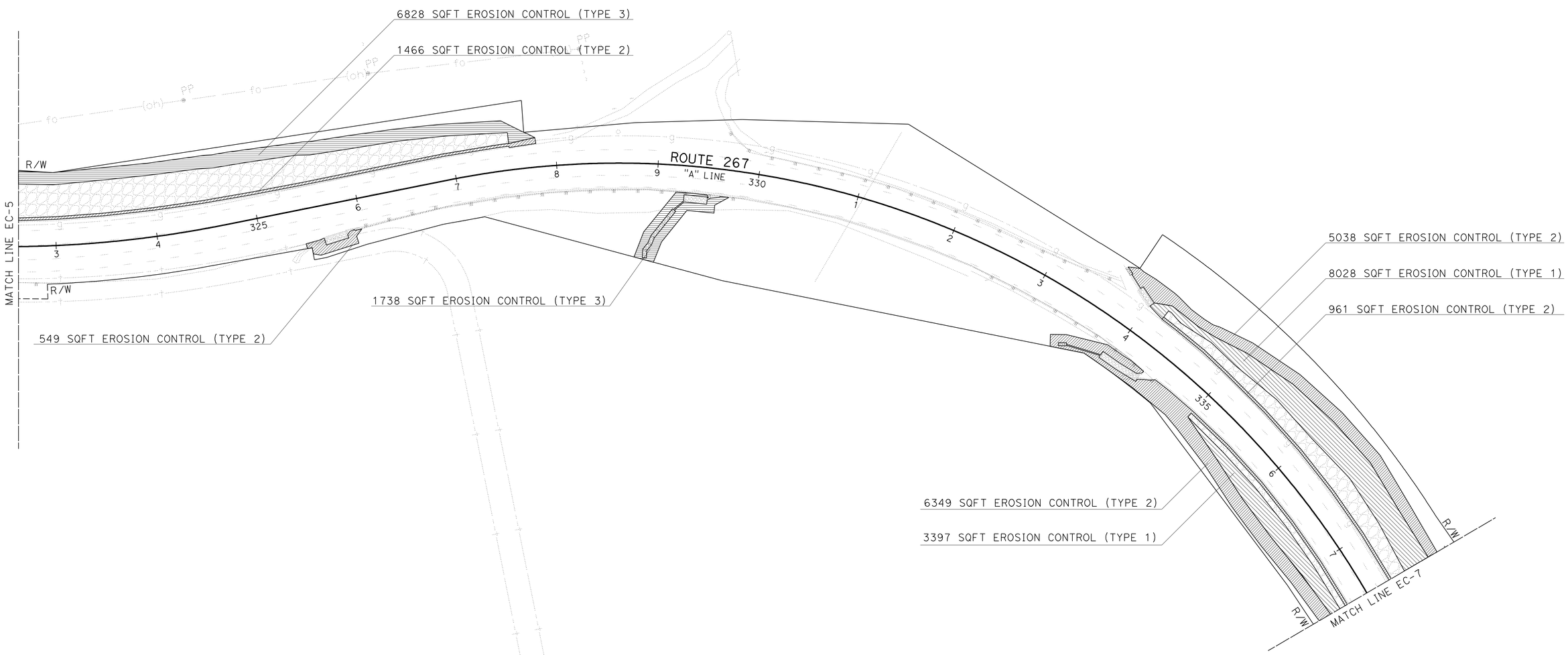

THIS PLAN ACCURATE FOR EROSION CONTROL WORK ONLY.

EROSION CONTROL PLAN

SCALE: 1" = 50'

EC-6

REVISED BY	DATE REVISED
J. WILLIAMSON	KENNETH MURRAY
CALCULATED-DESIGNED BY	CHECKED BY
SENIOR LANDSCAPE ARCHITECT	KENNETH MURRAY

STATE OF CALIFORNIA - DEPARTMENT OF TRANSPORTATION
Caltrans® LANDSCAPE ARCHITECTURE

LAST REVISION 12-10-09 | DATE PLOTTED => 12-APR-2010 | TIME PLOTTED => 12:44

Dist	COUNTY	ROUTE	POST MILES TOTAL PROJECT	SHEET No.	TOTAL SHEETS
03	Pla	267	4.9/6.7	20	74

LICENSED LANDSCAPE ARCHITECT

4-12-10
PLANS APPROVAL DATE

LICENSED LANDSCAPE ARCHITECT
JAMES G. WILLIAMSON
No. 5415
Signature
02-28-12
Renewal Date
12-10-09
Date
STATE OF CALIFORNIA

THE STATE OF CALIFORNIA OR ITS OFFICERS OR AGENTS SHALL NOT BE RESPONSIBLE FOR THE ACCURACY OR COMPLETENESS OF SCANNED COPIES OF THIS PLAN SHEET.

NOTE:
FOR COMPLETE RIGHT OF WAY AND ACCURATE ACCESS DATA, SEE RIGHT OF WAY RECORD MAPS AT DISTRICT OFFICE.

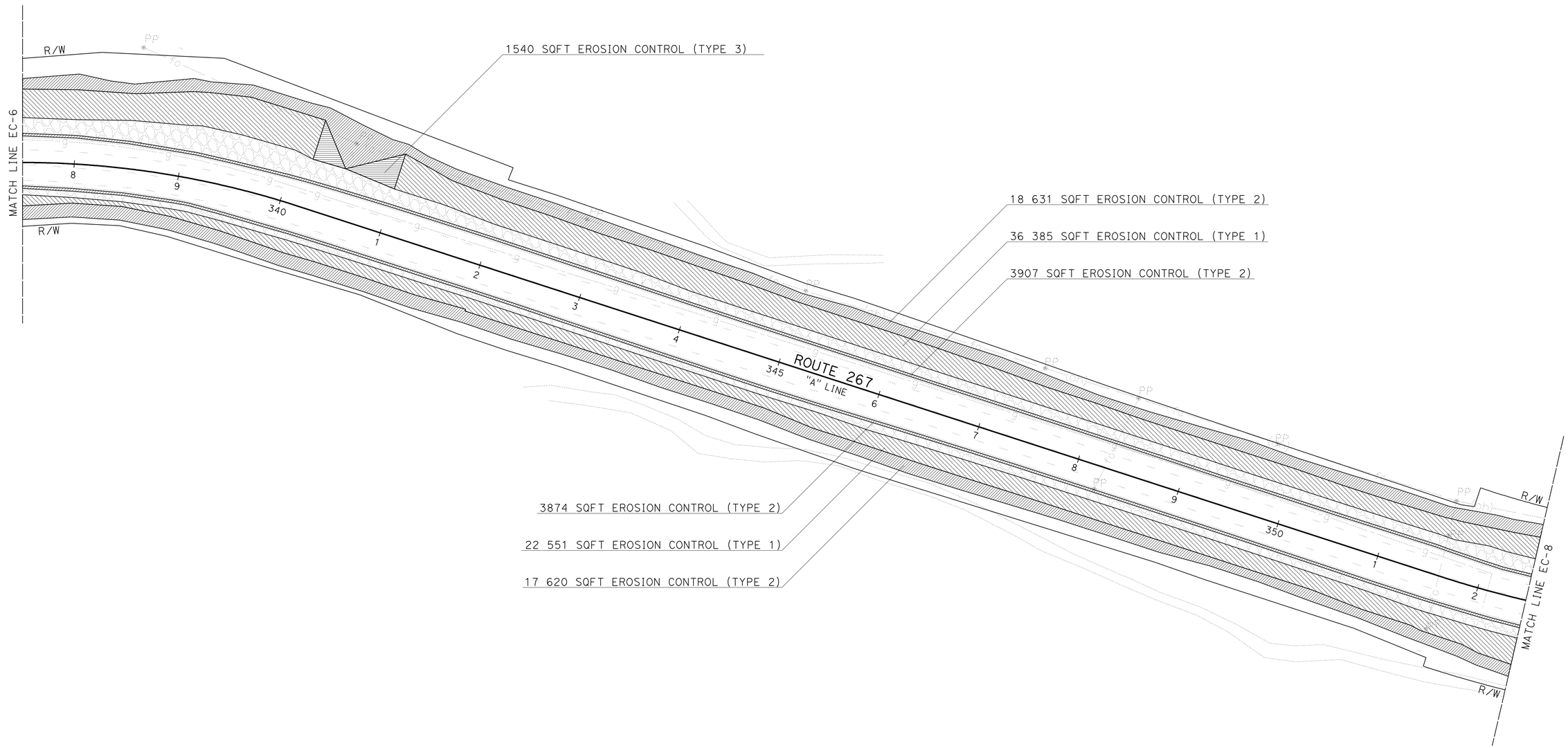

EROSION CONTROL PLAN

SCALE: 1" = 50'

EC-7

THIS PLAN ACCURATE FOR EROSION CONTROL WORK ONLY.

STATE OF CALIFORNIA - DEPARTMENT OF TRANSPORTATION
Caltrans® LANDSCAPE ARCHITECTURE

SENIOR LANDSCAPE ARCHITECT: KENNETH MURRAY
CALCULATED-DESIGNED BY: J. WILLIAMSON
CHECKED BY: KENNETH MURRAY
REVISED BY
DATE REVISED

LAST REVISION 12-10-09
DATE PLOTTED => 12-APR-2010
TIME PLOTTED => 12:35

Dist	COUNTY	ROUTE	POST MILES TOTAL PROJECT	SHEET No.	TOTAL SHEETS
03	Pla	267	4.9/6.7	21	74

LICENSED LANDSCAPE ARCHITECT

4-12-10
PLANS APPROVAL DATE

LICENSED LANDSCAPE ARCHITECT
JAMES G. WILLIAMSON
No. 5415
Signature
02-28-12
Renewal Date
12-10-09
Date
STATE OF CALIFORNIA

THE STATE OF CALIFORNIA OR ITS OFFICERS OR AGENTS SHALL NOT BE RESPONSIBLE FOR THE ACCURACY OR COMPLETENESS OF SCANNED COPIES OF THIS PLAN SHEET.

NOTE:
FOR COMPLETE RIGHT OF WAY AND ACCURATE ACCESS DATA, SEE RIGHT OF WAY RECORD MAPS AT DISTRICT OFFICE.

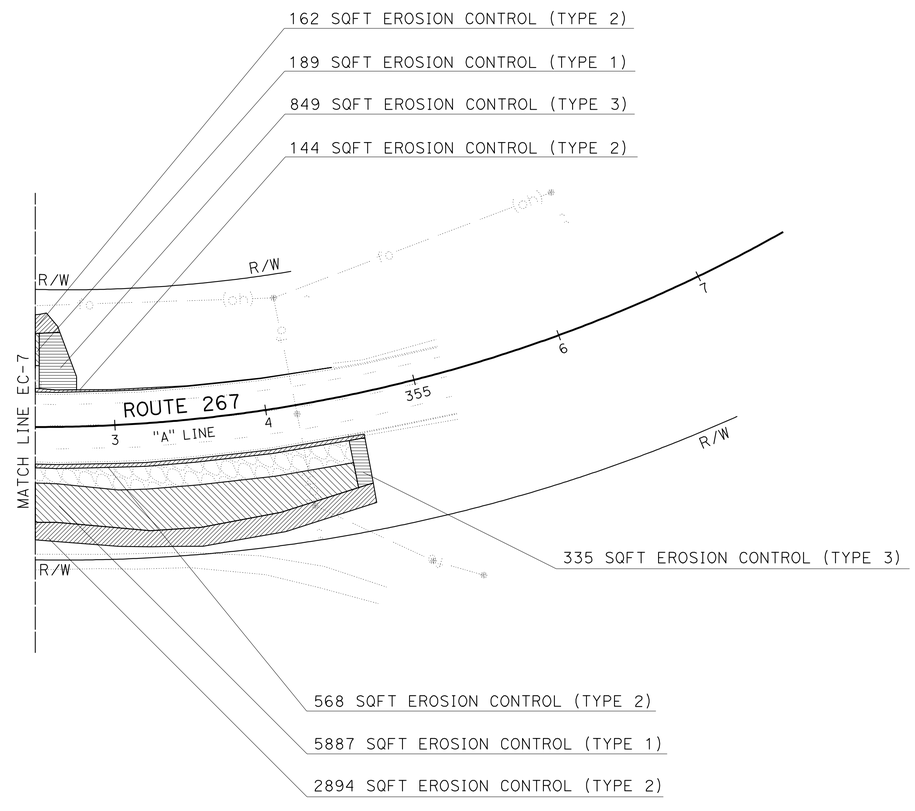

THIS PLAN ACCURATE FOR EROSION CONTROL WORK ONLY.

EROSION CONTROL PLAN

SCALE: 1" = 50'

EC-8

STATE OF CALIFORNIA - DEPARTMENT OF TRANSPORTATION
Caltrans® LANDSCAPE ARCHITECTURE

SENIOR LANDSCAPE ARCHITECT: KENNETH MURRAY
CALCULATED-DESIGNED BY: J. WILLIAMSON
CHECKED BY: KENNETH MURRAY
REVISED BY
DATE REVISED

LAST REVISION 12-10-09
DATE PLOTTED => 12-APR-2010
TIME PLOTTED => 12:35

Dist	COUNTY	ROUTE	POST MILES TOTAL PROJECT	SHEET No.	TOTAL SHEETS
03	Pla	267	4.9/6.7	22	74

LICENSED LANDSCAPE ARCHITECT

4-12-10
PLANS APPROVAL DATE

LICENSED LANDSCAPE ARCHITECT
JAMES G. WILLIAMSON
No. 5415
Signature
02-28-12
Renewal Date
12-10-09
Date
STATE OF CALIFORNIA

THE STATE OF CALIFORNIA OR ITS OFFICERS OR AGENTS SHALL NOT BE RESPONSIBLE FOR THE ACCURACY OR COMPLETENESS OF SCANNED COPIES OF THIS PLAN SHEET.

LEGEND:

① - EROSION CONTROL (TYPE 1)
- COMPOST, INCORPORATE
- EROSION CONTROL (HYDROSEED)
- ROLLED EROSION CONTROL PRODUCT (NETTING) (TYPE A)

② - EROSION CONTROL (TYPE 2)
- EROSION CONTROL (HYDROSEED)

③ - EROSION CONTROL (TYPE 3)
- EROSION CONTROL (HYDROSEED)
- ROLLED EROSION CONTROL PRODUCT (NETTING) (TYPE A)

---- - DISTURBED SOIL AREA

NOTE:

ALL DISTANCES ARE VARIABLE.

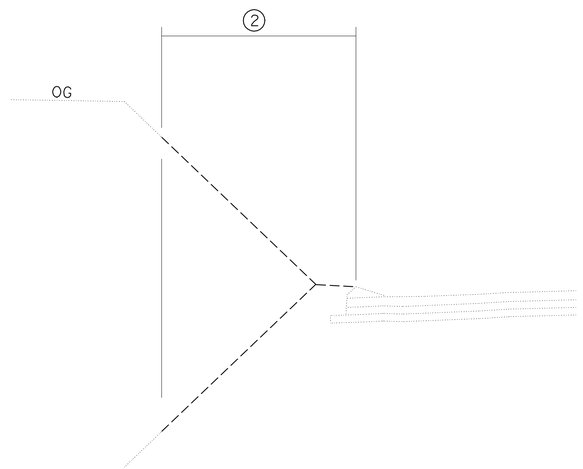

"A" 256+00 TO 257+00 Lt
"A" 257+73 TO 261+98 Rt
"A" 262+27 TO 265+78 Lt
"A" 267+72 TO 267+95 Rt
"A" 268+62 TO 270+50 Lt
"A" 270+18 TO 273+53 Rt
"A" 279+41 TO 281+25 Lt
"A" 279+28 TO 281+45 Rt
"A" 284+16 TO 286+18 Rt
"A" 286+63 TO 294+15 Rt
"A" 288+00 TO 288+50 Lt
"A" 289+85 TO 292+37 Lt
"A" 294+63 TO 295+87 Lt
"A" 296+48 TO 300+57 Rt
"A" 301+01 TO 314+50 Rt
"A" 304+63 TO 304+87 Lt
"A" 325+42 TO 326+00 Rt
"A" 333+64 TO 334+03 Lt
"A" 333+35 TO 335+00 Rt
"A" 352+75 TO 354+50 Lt

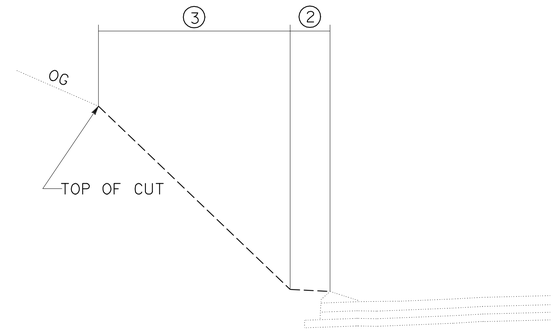

"A" 265+79 TO 266+17 Lt
"A" 268+50 TO 268+62 Lt
"A" 274+57 TO 274+98 Lt
"A" 279+18 TO 279+41 Lt
"A" 281+45 TO 281+88 Lt
"A" 286+50 TO 287+00 Lt
"A" 287+50 TO 288+00 Lt
"A" 289+65 TO 289+85 Lt
"A" 292+37 TO 292+50 Lt
"A" 294+50 TO 294+63 Lt
"A" 295+87 TO 296+48 Lt
"A" 304+87 TO 305+50 Lt
"A" 327+55 TO 327+81 Lt

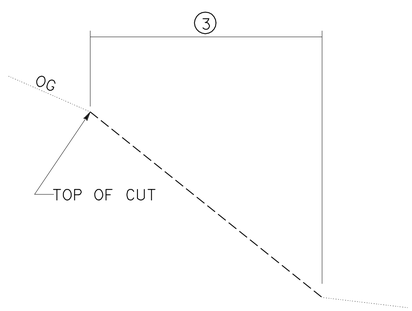

"A" 304+49 TO 304+63 Lt
"A" 307+33 TO 307+49 Lt
"A" 317+46 TO 317+93 Lt

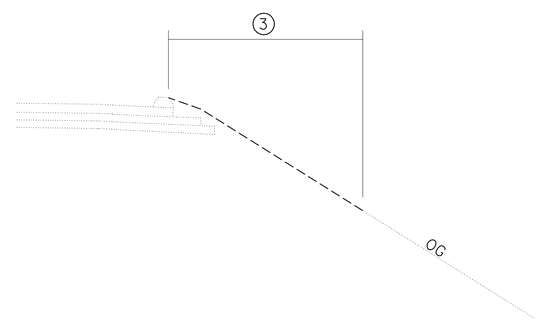

"A" 289+23 TO 289+43 Rt
"A" 300+57 TO 301+02 RT
"A" 312+13 TO 312+33 Rt
"A" 285+18 TO 286+50 Rt
"A" 322+23 TO 322+46 Rt
"A" 328+78 TO 329+73 Rt

THIS PLAN ACCURATE FOR EROSION CONTROL WORK ONLY.

EROSION CONTROL DETAILS

NO SCALE

ECD-1

REVISED BY	DATE REVISED

J. WILLIAMSON — KENNETH MURRAY
CALCULATED-DESIGNED BY — CHECKED BY
SENIOR LANDSCAPE ARCHITECT — KENNETH MURRAY

STATE OF CALIFORNIA - DEPARTMENT OF TRANSPORTATION
Caltrans® LANDSCAPE ARCHITECTURE

LAST REVISION 12-10-09
DATE PLOTTED => 12-APR-2010
TIME PLOTTED => 12:35

Dist	COUNTY	ROUTE	POST MILES TOTAL PROJECT	SHEET No.	TOTAL SHEETS
03	Pla	267	4.9/6.7	23	74

LICENSED LANDSCAPE ARCHITECT

4-12-10
PLANS APPROVAL DATE

LICENSED LANDSCAPE ARCHITECT
JAMES G. WILLIAMSON
No. 5415
Signature
02-28-12
Renewal Date
12-10-09
Date
STATE OF CALIFORNIA

THE STATE OF CALIFORNIA OR ITS OFFICERS OR AGENTS SHALL NOT BE RESPONSIBLE FOR THE ACCURACY OR COMPLETENESS OF SCANNED COPIES OF THIS PLAN SHEET.

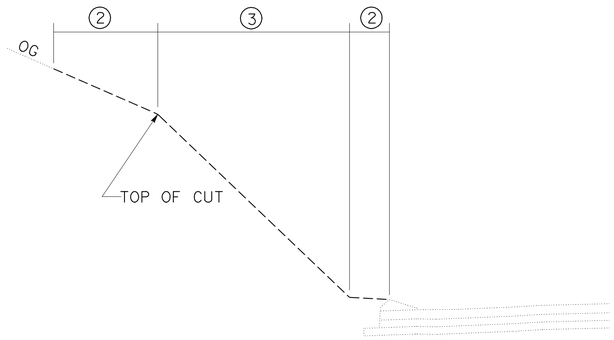

"A" 352+50 TO 352+75 L†
"A" 354+50 TO 354+60 R†

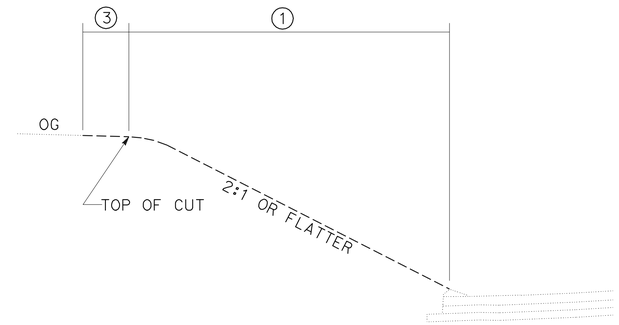

"A" 288+75 TO 289+65 L†
"A" 292+50 TO 294+50 L†
"A" 303+50 TO 304+50 L†
"A" 307+18 TO 307+34 L†
"A" 307+87 TO 311+60 L†

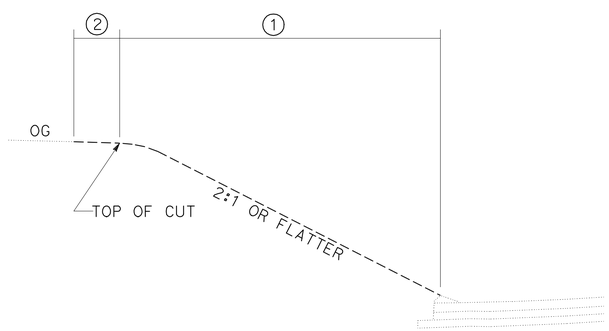

"A" 334+02 TO 334+18 L†

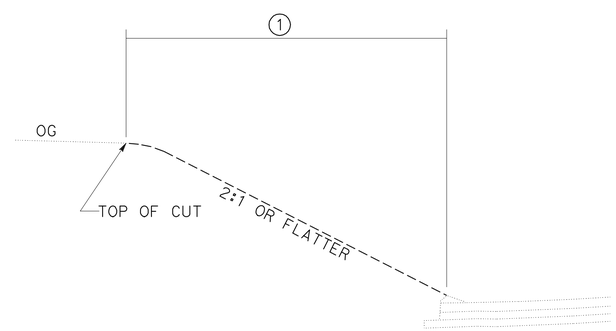

"A" 288+50 TO 288+75 L†

THIS PLAN ACCURATE FOR EROSION CONTROL WORK ONLY.

EROSION CONTROL DETAILS

NO SCALE

ECD-2

REVISED BY	J. WILLIAMSON
DATE REVISED	KENNETH MURRAY
CALCULATED-DESIGNED BY	SENIOR LANDSCAPE ARCHITECT
CHECKED BY	KENNETH MURRAY

STATE OF CALIFORNIA - DEPARTMENT OF TRANSPORTATION
Caltrans® LANDSCAPE ARCHITECTURE

LAST REVISION 12-08-09
DATE PLOTTED => 12-APR-2010
TIME PLOTTED => 12:35

Dist	COUNTY	ROUTE	POST MILES TOTAL PROJECT	SHEET No.	TOTAL SHEETS
03	Pla	267	4.9/6.7	24	74

LICENSED LANDSCAPE ARCHITECT

4-12-10
PLANS APPROVAL DATE

LICENSED LANDSCAPE ARCHITECT
JAMES G. WILLIAMSON
No. 5415
Signature
02-28-12
Renewal Date
12-10-09
Date
STATE OF CALIFORNIA

THE STATE OF CALIFORNIA OR ITS OFFICERS OR AGENTS SHALL NOT BE RESPONSIBLE FOR THE ACCURACY OR COMPLETENESS OF SCANNED COPIES OF THIS PLAN SHEET.

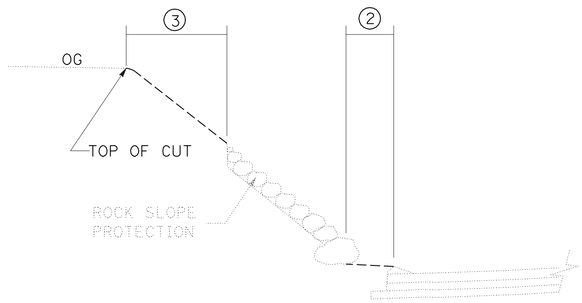

"A" 266+17 TO 268+50 Lt
"A" 274+98 TO 279+18 Lt
"A" 281+88 TO 286+50 Lt
"A" 287+00 TO 287+50 Lt

"A" 296+48 TO 298+50 Lt
"A" 301+50 TO 303+50 Lt
"A" 305+50 TO 306+50 Lt
"A" 317+93 TO 327+55 Lt

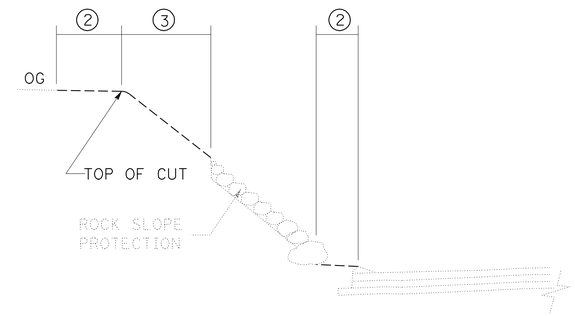

"A" 340+18 TO 341+00 Lt

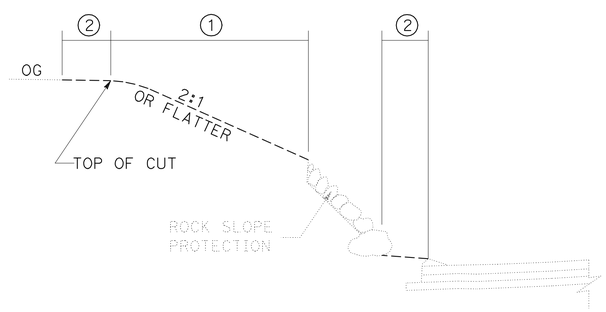

"A" 334+18 TO 340+18 Lt
"A" 335+00 TO 354+50 Rt
"A" 341+00 TO 352+50 Lt

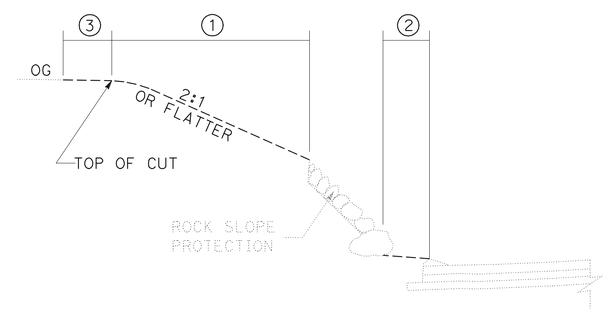

"A" 298+50 TO 301+50 Lt
"A" 306+50 TO 307+19 Lt

EROSION CONTROL DETAILS

NO SCALE

THIS PLAN ACCURATE FOR EROSION CONTROL WORK ONLY.

ECD-3

STATE OF CALIFORNIA - DEPARTMENT OF TRANSPORTATION
Caltrans® LANDSCAPE ARCHITECTURE

SENIOR LANDSCAPE ARCHITECT: KENNETH MURRAY
CALCULATED-DESIGNED BY: J. WILLIAMSON
CHECKED BY: KENNETH MURRAY
REVISED BY
DATE REVISED

LAST REVISION 12-09-09
DATE PLOTTED => 12-APR-2010
TIME PLOTTED => 12:35

Dist	COUNTY	ROUTE	POST MILES TOTAL PROJECT	SHEET No.	TOTAL SHEETS
03	Pla	267	4.9/6.7	25	74

LICENSED LANDSCAPE ARCHITECT

4-12-10
PLANS APPROVAL DATE

LICENSED LANDSCAPE ARCHITECT JAMES G. WILLIAMSON No. 5415 Signature 02-28-12 Renewal Date 12-10-09 Date STATE OF CALIFORNIA

THE STATE OF CALIFORNIA OR ITS OFFICERS OR AGENTS SHALL NOT BE RESPONSIBLE FOR THE ACCURACY OR COMPLETENESS OF SCANNED COPIES OF THIS PLAN SHEET.

EROSION CONTROL QUANTITIES

SHEET	STATION	(N) EROSION CONTROL (TYPE)	COMPOST, INCORPORATE	ROLLED EROSION CONTROL PRODUCT (NETTING) (TYPE A)	EROSION CONTROL (HYDROSEED)
			SQYD	SF	SF
EC-1	"A" 256+00 L+ TO "A" 257+00 L+	2			242
EC-1	"A" 257+85 R+ TO "A" 261+98 R+	2			498
EC-1	"A" 262+27 L+ TO "A" 268+62 L+	2			1499
EC-1	"A" 265+78 L+ TO "A" 268+62 L+	3		3997	3997
EC-1	"A" 267+69 R+ TO "A" 267+98 R+	3		729	729
EC-2	"A" 268+62 L+ TO "A" 270+50 L+	2			687
EC-2	"A" 270+18 R+ TO "A" 273+53 R+	2			173
EC-2	"A" 274+57 L+ TO "A" 279+41 L+	3		6377	6377
EC-2	"A" 274+57 L+ TO "A" 281+64 L+	2			4093
EC-2	"A" 279+28 R+ TO "A" 281+45 R+	2			84
EC-2	"A" 281+25 L+ TO "A" 281+64 L+	3		7767	7767
EC-3	"A" 281+64 L+ TO "A" 288+00 L+	3		7369	7369
EC-3	"A" 281+64 L+ TO "A" 288+50 L+	2			2052
EC-3	"A" 284+16 R+ TO "A" 286+14 R+	2			172
EC-3	"A" 286+14 R+ TO "A" 286+63 R+	3		663	663
EC-3	"A" 286+63 R+ TO "A" 294+15 R+	2			483
EC-3	"A" 288+50 L+ TO "A" 289+65 L+	1	118	1060	1060
EC-3	"A" 288+75 L+ TO "A" 289+85 L+	3		1431	1431
EC-3	"A" 289+22 R+ TO "A" 289+43 R+	3		606	606
EC-3	"A" 289+66 L+ TO "A" 292+50 L+	2			464
EC-3	"A" 292+37 L+ TO "A" 294+63 L+	3		3008	3008
EC-3	"A" 292+50 L+ TO "A" 294+50 L+	1	265	2382	2382
EC-3	"A" 294+50 L+ TO "A" 295+63 L+	2			74
EC-4	"A" 295+63 L+ TO "A" 303+50 L+	2			2044
EC-4	"A" 295+87 L+ TO "A" 304+63 L+	3		12505	12505
EC-4	"A" 296+50 R+ TO "A" 301+00 R+	2			1188
EC-4	"A" 298+50 L+ TO "A" 301+50 L+	1	522	4701	4701
EC-4	"A" 300+57 R+ TO "A" 301+10 L+	3		606	606
EC-4	"A" 301+01 R+ TO "A" 308+60 R+	2			1011
EC-4	"A" 303+50 L+ TO "A" 304+50 L+	1	81	728	728
EC-4	"A" 304+63 L+ TO "A" 307+34 L+	2			605
EC-4	"A" 304+87 L+ TO "A" 307+49 L+	3		4348	4348
EC-4	"A" 306+50 L+ TO "A" 307+34 L+	1	67	600	600

(N) NOT A SEPARATE PAY ITEM, FOR INFORMATION ONLY.

EROSION CONTROL QUANTITIES (CONTINUED)

SHEET	STATION	(N) EROSION CONTROL (TYPE)	COMPOST, INCORPORATE	ROLLED EROSION CONTROL PRODUCT (NETTING) (TYPE A)	EROSION CONTROL (HYDROSEED)
			SQYD	SF	SF
EC-4	"A" 307+86 L+ TO "A" 308+60 L+	3		985	985
EC-4	"A" 307+86 L+ TO "A" 308+60 L+	1	114	1025	1025
EC-5	"A" 308+60 L+ TO "A" 311+59 L+	3		3936	3936
EC-5	"A" 308+60 L+ TO "A" 311+50 L+	1	587	5285	5285
EC-5	"A" 308+60 R+ TO "A" 314+50 R+	2			492
EC-5	"A" 312+14 R+ TO "A" 314+33 R+	3		875	875
EC-5	"A" 317+46 L+ TO "A" 322+63 L+	3		7118	7118
EC-5	"A" 317+82 L+ TO "A" 322+63 L+	2			1273
EC-5	"A" 322+27 R+ TO "A" 322+48 R+	3		314	314
EC-6	"A" 322+63 L+ TO "A" 327+81 L+	3		6828	6828
EC-6	"A" 322+63 L+ TO "A" 327+81 L+	2			1466
EC-6	"A" 325+42 R+ TO "A" 326+00 R+	2			549
EC-6	"A" 328+78 R+ TO "A" 329+79 R+	3		1738	1738
EC-6	"A" 333+58 R+ TO "A" 337+51 R+	2			6349
EC-6	"A" 333+63 L+ TO "A" 337+51 L+	2			5038
EC-6	"A" 334+18 L+ TO "A" 337+51 L+	2			961
EC-6	"A" 334+02 L+ TO "A" 337+51 L+	1	892	8028	8028
EC-6	"A" 335+00 R+ TO "A" 337+51 R+	1	377	3397	3397
EC-7	"A" 340+17 L+ TO "A" 341+00 L+	3		1540	1540
EC-7	"A" 337+51 L+ TO "A" 352+47 L+	2			18631
EC-7	"A" 337+51 L+ TO "A" 352+47 L+	1	4042	36385	36385
EC-7	"A" 337+51 L+ TO "A" 352+47 L+	2			3907
EC-7	"A" 337+51 R+ TO "A" 352+47 R+	2			3874
EC-7	"A" 337+51 R+ TO "A" 352+47 R+	1	2506	22551	22551
EC-7	"A" 337+51 R+ TO "A" 352+47 R+	2			17620
EC-8	"A" 352+50 L+ TO "A" 352+75 L+	3		849	849
EC-8	"A" 352+47 L+ TO "A" 352+50 L+	1	21	189	189
EC-8	"A" 352+47 L+ TO "A" 352+65 L+	2			162
EC-8	"A" 352+47 L+ TO "A" 354+50 L+	2			144
EC-8	"A" 352+47 R+ TO "A" 354+60 R+	2			568
EC-8	"A" 352+47 R+ TO "A" 354+50 R+	1	654	5887	5887
EC-8	"A" 352+47 R+ TO "A" 354+60 R+	2			2894
EC-8	"A" 354+50 R+ TO "A" 354+60 R+	3		335	335
TOTAL			10246	166142	245439

(N) NOT A SEPARATE PAY ITEM, FOR INFORMATION ONLY.

EROSION CONTROL QUANTITIES

ECQ-1

STATE OF CALIFORNIA - DEPARTMENT OF TRANSPORTATION
Caltrans® LANDSCAPE ARCHITECTURE

SENIOR LANDSCAPE ARCHITECT: KENNETH MURRAY
CALCULATED-DESIGNED BY: J. WILLIAMSON
CHECKED BY: KENNETH MURRAY
REVISED BY
DATE REVISED

LAST REVISION 12-09-09
DATE PLOTTED => 04-AUG-2010
TIME PLOTTED => 06:22

Dist	COUNTY	ROUTE	POST MILES TOTAL PROJECT	SHEET No.	TOTAL SHEETS
03	Pla	267	4.9/6.7	26	74

12-10-09
REGISTERED CIVIL ENGINEER DATE

4-12-10
PLANS APPROVAL DATE

REGISTERED PROFESSIONAL ENGINEER
RYAN S. KOHAGURA
No. C58535
Exp. 12-31-10
CIVIL
STATE OF CALIFORNIA

THE STATE OF CALIFORNIA OR ITS OFFICERS OR AGENTS SHALL NOT BE RESPONSIBLE FOR THE ACCURACY OR COMPLETENESS OF SCANNED COPIES OF THIS PLAN SHEET.

NOTE:

1. FOR COMPLETE RIGHT OF WAY AND ACCESS DATA, SEE RIGHT OF WAY RECORD MAPS AT DISTRICT OFFICE.

ABBREVIATIONS:

w/	WITH
TST	TRACTION SAND TRAP
SFES	STEEL FLARE END SECTION
DD	DOWN DRAIN
UD	UNDER DRAIN
OSD	OVERSIZE DRAIN

LEGEND:

- (No.) DRAINAGE SYSTEM No.
- (x) DRAINAGE UNIT
- ▢ TRACTION SAND TRAP

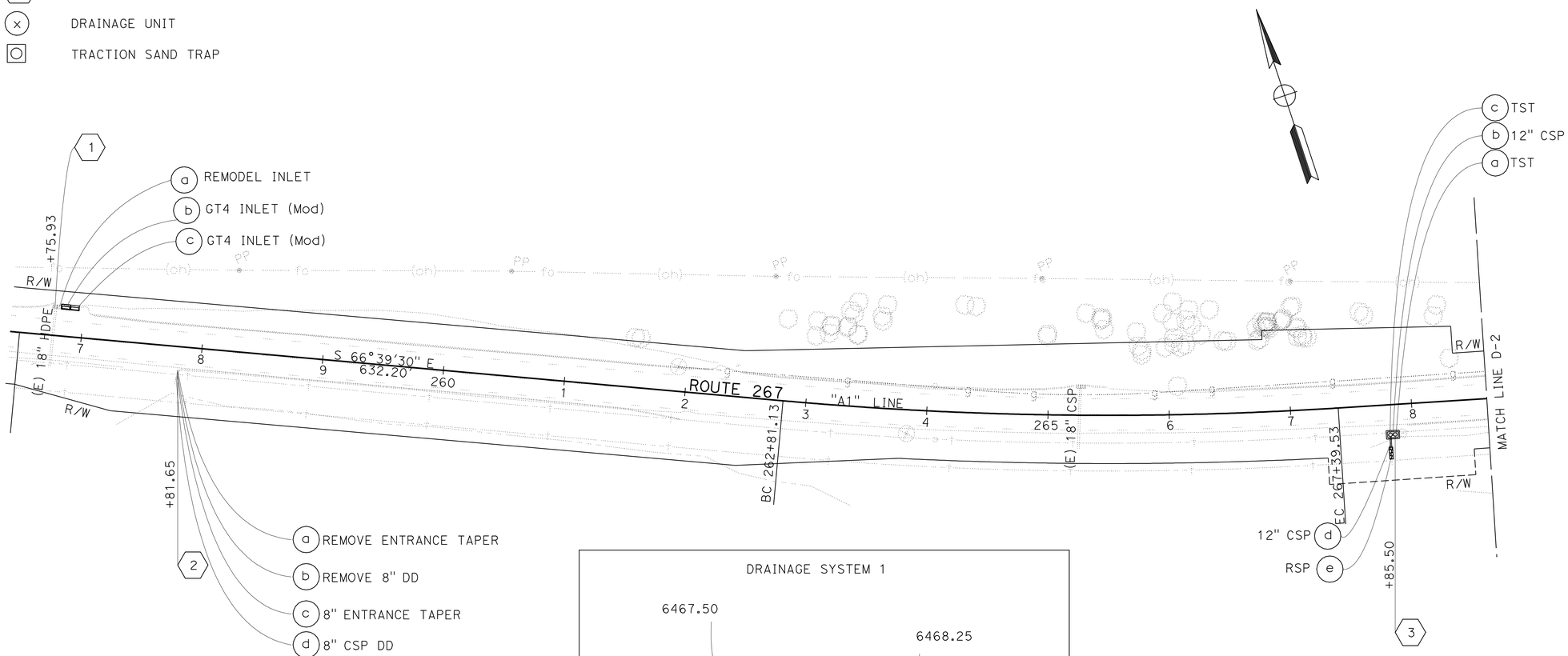

DRAINAGE SYSTEM 1

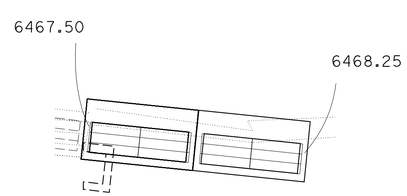

SCALE: 1" = 5'
+/- ELEVATIONS OR MATCH EXISTING

DRAINAGE PLANS

SCALE: 1" = 50'

D-1

THIS PLAN ACCURATE FOR DRAINAGE ONLY.

STATE OF CALIFORNIA - DEPARTMENT OF TRANSPORTATION
Caltrans PROJECT DEVELOPMENT

FUNCTIONAL SUPERVISOR: MASTRI ALVANDI
CALCULATED-DESIGNED BY: CHARLES WOOTEN
CHECKED BY: RYAN KOHAGURA
REVISED BY
DATE REVISED

LAST REVISION 12-09-09
DATE PLOTTED => 12-APR-2010
TIME PLOTTED => 12:58

Dist	COUNTY	ROUTE	POST MILES TOTAL PROJECT	SHEET No.	TOTAL SHEETS
03	Pla	267	4.9/6.7	27	74

REGISTERED CIVIL ENGINEER 12-10-09 DATE

4-12-10
PLANS APPROVAL DATE

REGISTERED PROFESSIONAL ENGINEER
RYAN S. KOHAGURA
No. C58535
Exp. 12-31-10
CIVIL
STATE OF CALIFORNIA

THE STATE OF CALIFORNIA OR ITS OFFICERS OR AGENTS SHALL NOT BE RESPONSIBLE FOR THE ACCURACY OR COMPLETENESS OF SCANNED COPIES OF THIS PLAN SHEET.

NOTE:

1. FOR COMPLETE RIGHT OF WAY AND ACCESS DATA, SEE RIGHT OF WAY RECORD MAPS AT DISTRICT OFFICE.

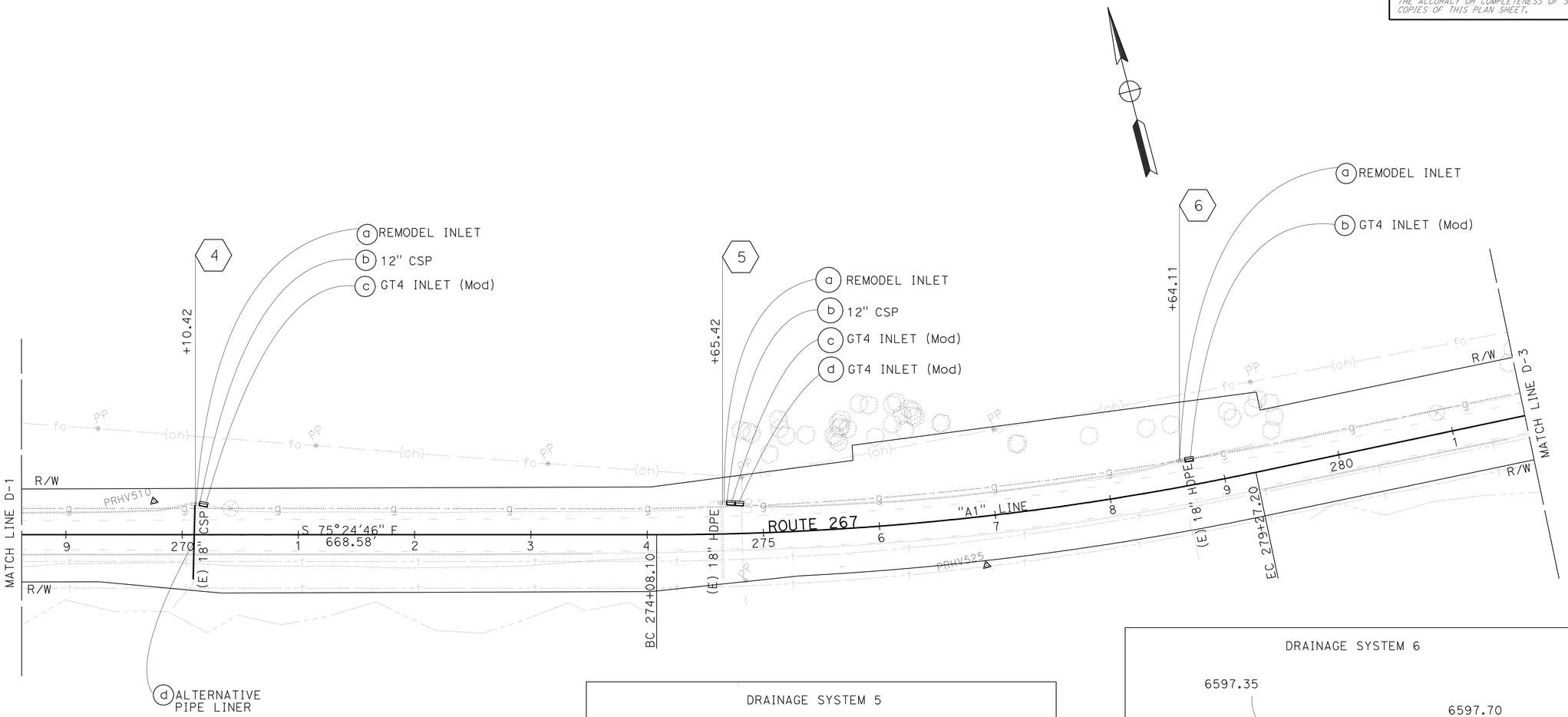

DRAINAGE SYSTEM 4

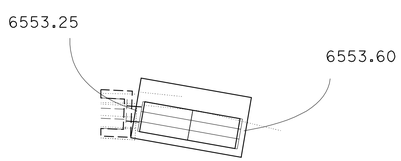

SCALE: 1" = 5'
+/- ELEVATIONS OR MATCH EXISTING

DRAINAGE SYSTEM 5

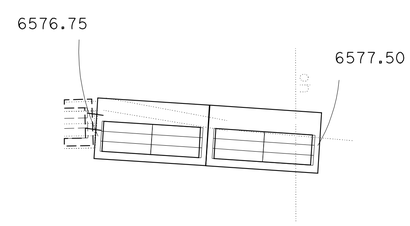

SCALE: 1" = 5'
+/- ELEVATIONS OR MATCH EXISTING

DRAINAGE SYSTEM 6

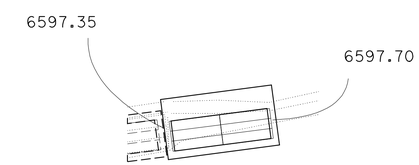

SCALE: 1" = 5'
+/- ELEVATIONS OR MATCH EXISTING

DRAINAGE PLANS

SCALE: 1" = 50'

THIS PLAN ACCURATE FOR DRAINAGE ONLY.

D-2

STATE OF CALIFORNIA - DEPARTMENT OF TRANSPORTATION
Caltrans PROJECT DEVELOPMENT

FUNCTIONAL SUPERVISOR: MASTRI ALVANDI
CALCULATED-DESIGNED BY: CHARLES WOOTEN
CHECKED BY: RYAN KOHAGURA
REVISED BY
DATE REVISED

LAST REVISION 12-09-09
DATE PLOTTED => 12-APR-2010
TIME PLOTTED => 12:58

Dist	COUNTY	ROUTE	POST MILES TOTAL PROJECT	SHEET No.	TOTAL SHEETS
03	Pla	267	4.9/6.7	28	74

REGISTERED CIVIL ENGINEER 12-10-09 DATE

4-12-10
PLANS APPROVAL DATE

REGISTERED PROFESSIONAL ENGINEER RYAN S. KOHAGURA No. C58535 Exp. 12-31-10 CIVIL STATE OF CALIFORNIA

THE STATE OF CALIFORNIA OR ITS OFFICERS OR AGENTS SHALL NOT BE RESPONSIBLE FOR THE ACCURACY OR COMPLETENESS OF SCANNED COPIES OF THIS PLAN SHEET.

NOTE:

1. FOR COMPLETE RIGHT OF WAY AND ACCESS DATA, SEE RIGHT OF WAY RECORD MAPS AT DISTRICT OFFICE.

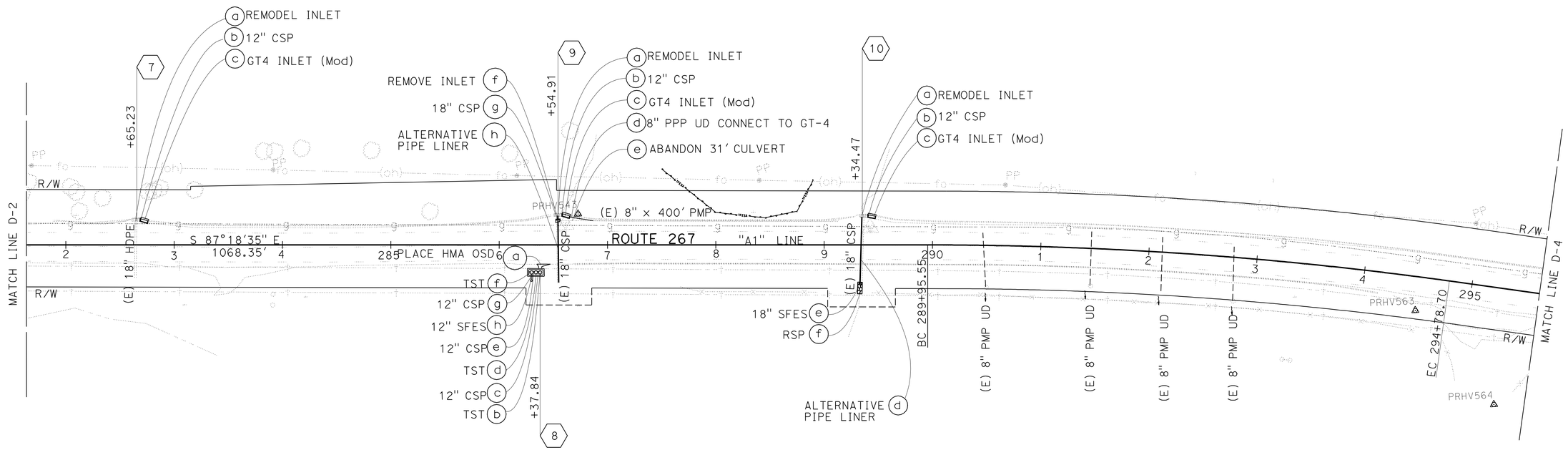

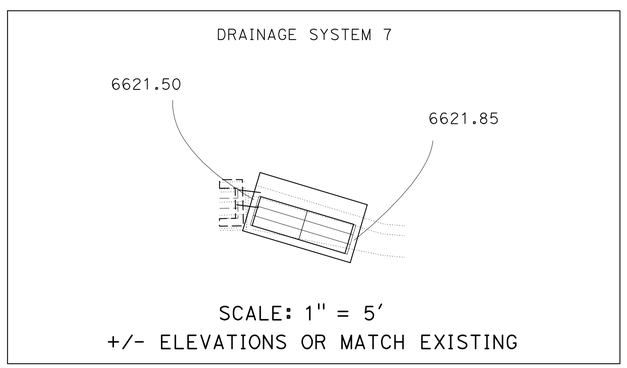

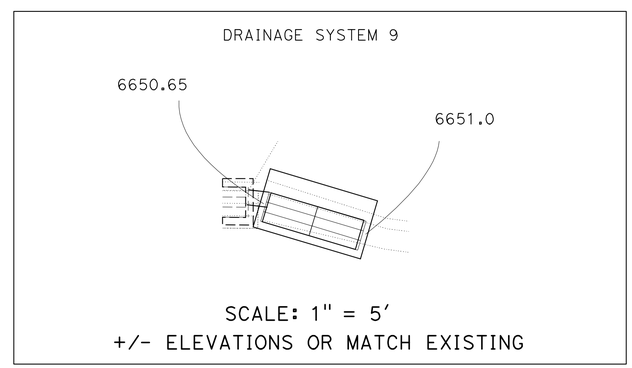

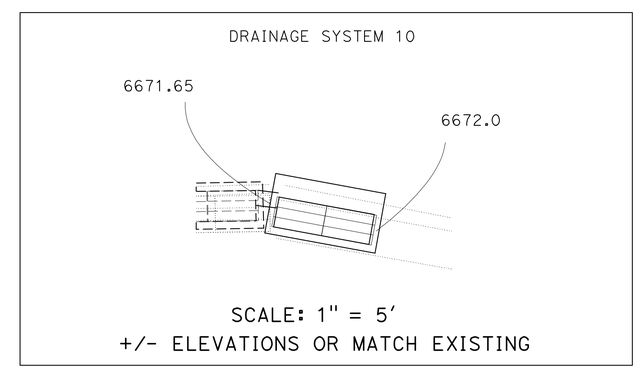

THIS PLAN ACCURATE FOR DRAINAGE ONLY.

DRAINAGE PLANS

SCALE: 1" = 50'

D-3

STATE OF CALIFORNIA - DEPARTMENT OF TRANSPORTATION
Caltrans PROJECT DEVELOPMENT

FUNCTIONAL SUPERVISOR: MASTRI ALVANDI
CALCULATED-DESIGNED BY: CHARLES WOOTEN
CHECKED BY: RYAN KOHAGURA
REVISED BY
DATE REVISED

LAST REVISION 12-09-09
DATE PLOTTED => 12-APR-2010
TIME PLOTTED => 12:58

Dist	COUNTY	ROUTE	POST MILES TOTAL PROJECT	SHEET No.	TOTAL SHEETS
03	Pla	267	4.9/6.7	29	74

REGISTERED CIVIL ENGINEER 12-10-09 DATE

4-12-10
PLANS APPROVAL DATE

REGISTERED PROFESSIONAL ENGINEER RYAN S. KOHAGURA No. C58535 Exp. 12-31-10 CIVIL STATE OF CALIFORNIA

THE STATE OF CALIFORNIA OR ITS OFFICERS OR AGENTS SHALL NOT BE RESPONSIBLE FOR THE ACCURACY OR COMPLETENESS OF SCANNED COPIES OF THIS PLAN SHEET.

NOTE:

1. FOR COMPLETE RIGHT OF WAY AND ACCESS DATA, SEE RIGHT OF WAY RECORD MAPS AT DISTRICT OFFICE.

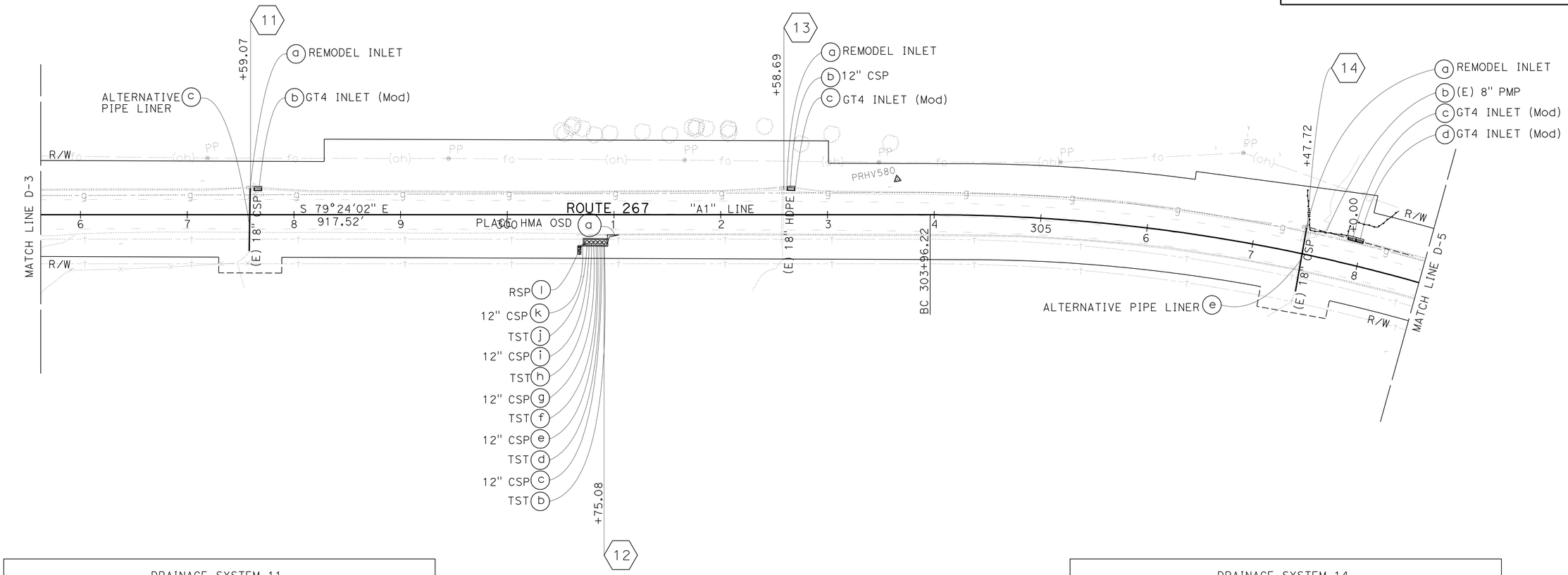

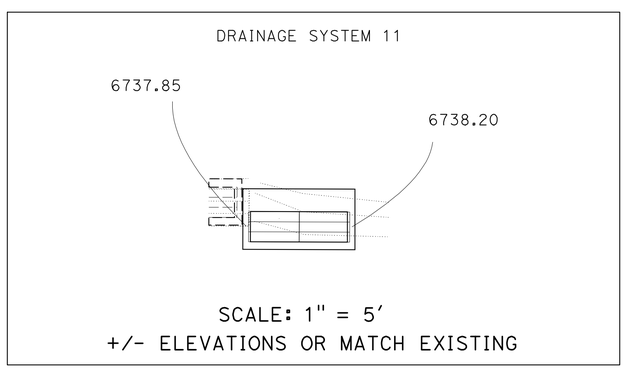

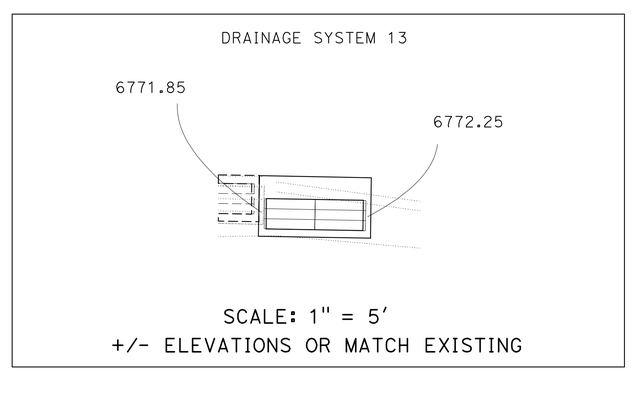

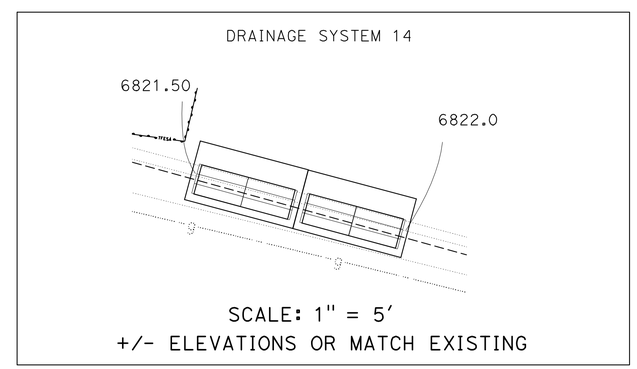

THIS PLAN ACCURATE FOR DRAINAGE ONLY.

DRAINAGE PLANS

SCALE: 1" = 50'

D-4

STATE OF CALIFORNIA - DEPARTMENT OF TRANSPORTATION
Caltrans PROJECT DEVELOPMENT

FUNCTIONAL SUPERVISOR: MASTRI ALVANDI
CALCULATED-DESIGNED BY: CHARLES WOOTEN
CHECKED BY: RYAN KOHAGURA
REVISED BY
DATE REVISED

LAST REVISION 12-09-09 | DATE PLOTTED => 12-APR-2010 | TIME PLOTTED => 13:11

Dist	COUNTY	ROUTE	POST MILES TOTAL PROJECT	SHEET No.	TOTAL SHEETS
03	Pla	267	4.9/6.7	30	74

REGISTERED CIVIL ENGINEER 12-10-09 DATE

4-12-10
PLANS APPROVAL DATE

REGISTERED PROFESSIONAL ENGINEER RYAN S. KOHAGURA No. C58535 Exp. 12-31-10 CIVIL STATE OF CALIFORNIA

THE STATE OF CALIFORNIA OR ITS OFFICERS OR AGENTS SHALL NOT BE RESPONSIBLE FOR THE ACCURACY OR COMPLETENESS OF SCANNED COPIES OF THIS PLAN SHEET.

NOTE:

1. FOR COMPLETE RIGHT OF WAY AND ACCESS DATA, SEE RIGHT OF WAY RECORD MAPS AT DISTRICT OFFICE.

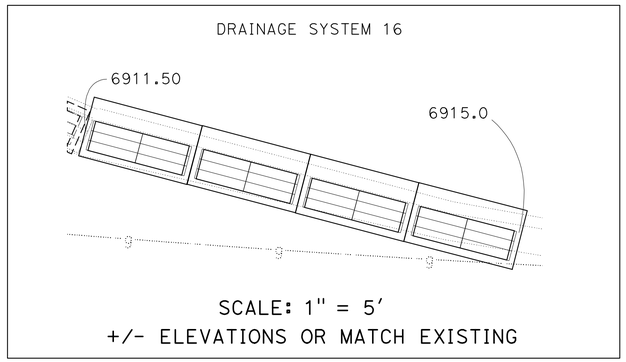

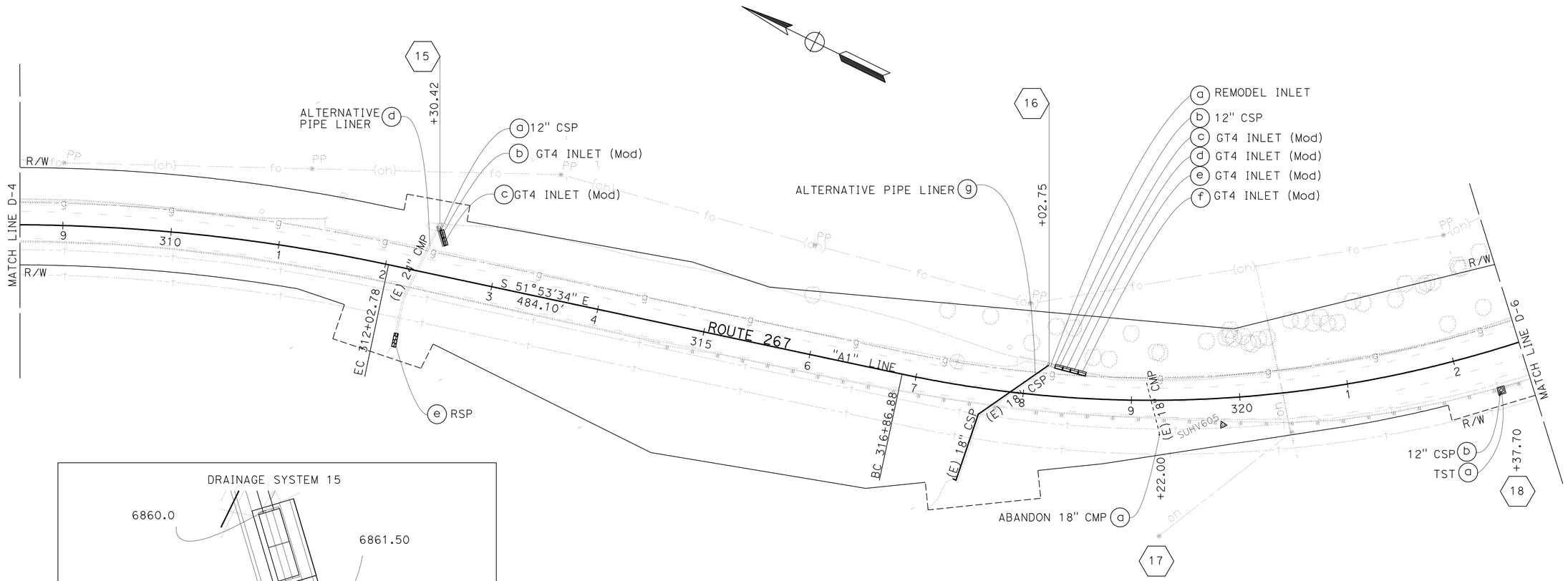

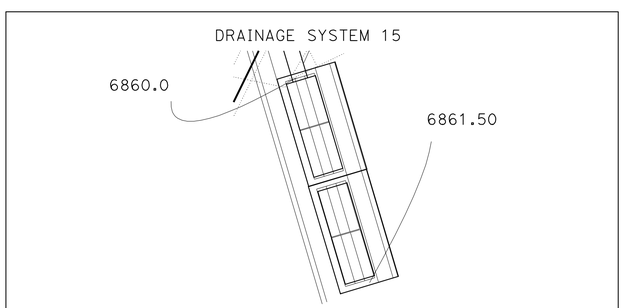

THIS PLAN ACCURATE FOR DRAINAGE ONLY.

DRAINAGE PLANS

SCALE: 1" = 50'

D-5

REVISED BY	DATE REVISED

CALCULATED-DESIGNED BY: CHARLES WOOTEN
CHECKED BY: RYAN KOHAGURA
FUNCTIONAL SUPERVISOR: MASTRI ALVANDI

STATE OF CALIFORNIA - DEPARTMENT OF TRANSPORTATION
Caltrans PROJECT DEVELOPMENT

LAST REVISION 12-09-09
DATE PLOTTED => 12-APR-2010
TIME PLOTTED => 13:12

Dist	COUNTY	ROUTE	POST MILES TOTAL PROJECT	SHEET No.	TOTAL SHEETS
03	Pla	267	4.9/6.7	31	74

REGISTERED CIVIL ENGINEER 12-10-09 DATE

4-12-10
PLANS APPROVAL DATE

REGISTERED PROFESSIONAL ENGINEER
RYAN S. KOHAGURA
No. C58535
Exp. 12-31-10
CIVIL
STATE OF CALIFORNIA

THE STATE OF CALIFORNIA OR ITS OFFICERS OR AGENTS SHALL NOT BE RESPONSIBLE FOR THE ACCURACY OR COMPLETENESS OF SCANNED COPIES OF THIS PLAN SHEET.

NOTE:

1. FOR COMPLETE RIGHT OF WAY AND ACCESS DATA, SEE RIGHT OF WAY RECORD MAPS AT DISTRICT OFFICE.

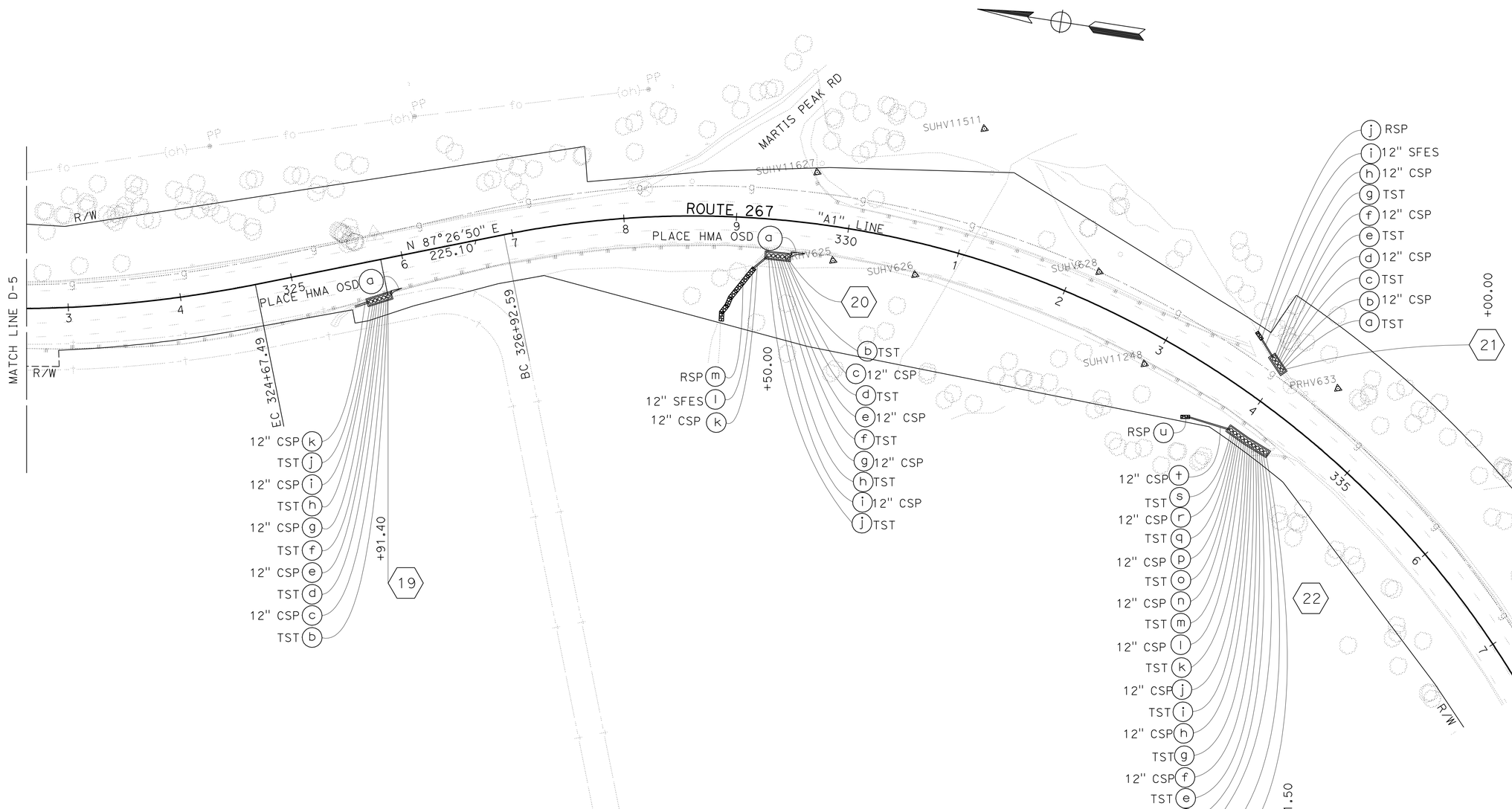

THIS PLAN ACCURATE FOR DRAINAGE ONLY.

DRAINAGE PLANS

SCALE: 1" = 50'

D-6

REVISED BY	DATE REVISED
CHARLES WOOTEN	RYAN KOHAGURA
CALCULATED-DESIGNED BY	CHECKED BY
FUNCTIONAL SUPERVISOR	MASTRI ALVANDI

STATE OF CALIFORNIA - DEPARTMENT OF TRANSPORTATION
Caltrans PROJECT DEVELOPMENT

LAST REVISION 12-09-09 | DATE PLOTTED => 12-APR-2010 | TIME PLOTTED => 13:12

Dist	COUNTY	ROUTE	POST MILES TOTAL PROJECT	SHEET No.	TOTAL SHEETS
03	Pla	267	4.9/6.7	32	74

REGISTERED CIVIL ENGINEER 12-10-09 DATE

4-12-10
PLANS APPROVAL DATE

REGISTERED PROFESSIONAL ENGINEER
RYAN S. KOHAGURA
No. C58535
Exp. 12-31-10
CIVIL
STATE OF CALIFORNIA

THE STATE OF CALIFORNIA OR ITS OFFICERS OR AGENTS SHALL NOT BE RESPONSIBLE FOR THE ACCURACY OR COMPLETENESS OF SCANNED COPIES OF THIS PLAN SHEET.

NOTES:

1. CONTRACTOR TO PLACE DI GRATE TO MATCH EXISTING ROAD CROSS & LONGITUDINAL SLOPE.
2. FOR DETAILS NOT SHOWN ON GT-4 DI SEE DRAINAGE DETAILS & Std PLAN D74A.
3. FOR DETAILS NOT SHOWN ON DD SEE Std PLAN D87A.

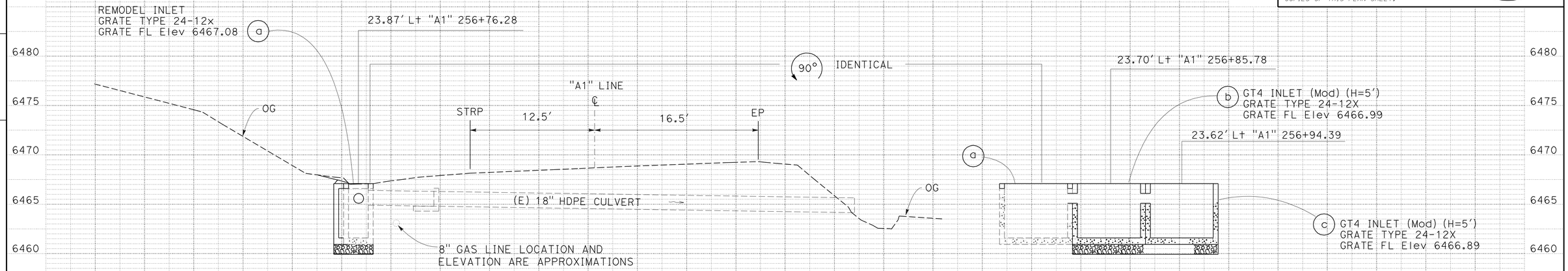

DRAINAGE SYSTEM No. 1
"A1" 256+75.93 PM 4.92

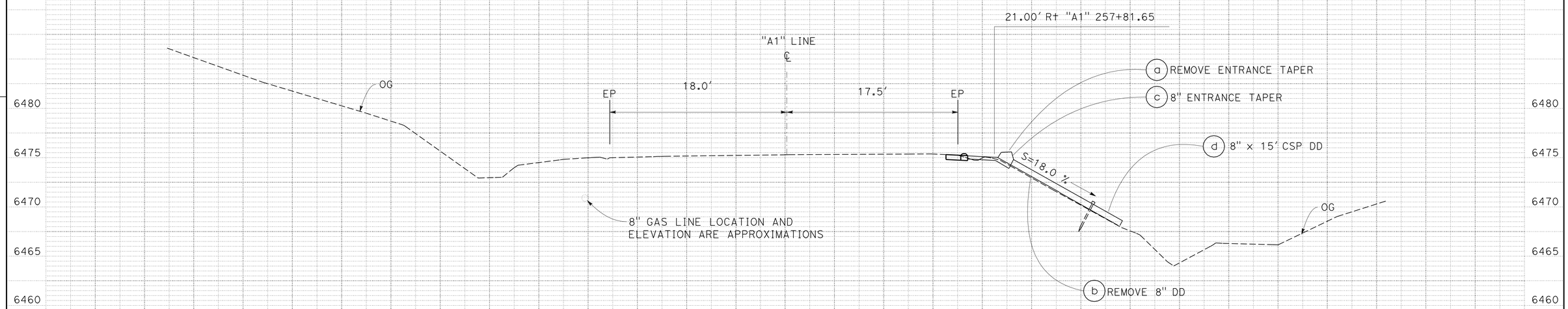

DRAINAGE SYSTEM No. 2
"A1" 257+81.65 PM 4.94

DRAINAGE PROFILES

SCALE: 1" = 5'

DP-1

STATE OF CALIFORNIA - DEPARTMENT OF TRANSPORTATION
Caltrans PROJECT DEVELOPMENT

FUNCTIONAL SUPERVISOR: MASTRI ALVANDI
CALCULATED-DESIGNED BY: CHARLES WOOTEN
CHECKED BY: RYAN KOHAGURA
REVISED BY
DATE REVISED

LAST REVISION 12-09-09
DATE PLOTTED => 12-APR-2010
TIME PLOTTED => 13:12

Dist	COUNTY	ROUTE	POST MILES TOTAL PROJECT	SHEET No.	TOTAL SHEETS
03	Pla	267	4.9/6.7	33	74

REGISTERED CIVIL ENGINEER 12-10-09 DATE

4-12-10
PLANS APPROVAL DATE

REGISTERED PROFESSIONAL ENGINEER
RYAN S. KOHAGURA
No. C58535
Exp. 12-31-10
CIVIL
STATE OF CALIFORNIA

THE STATE OF CALIFORNIA OR ITS OFFICERS OR AGENTS SHALL NOT BE RESPONSIBLE FOR THE ACCURACY OR COMPLETENESS OF SCANNED COPIES OF THIS PLAN SHEET.

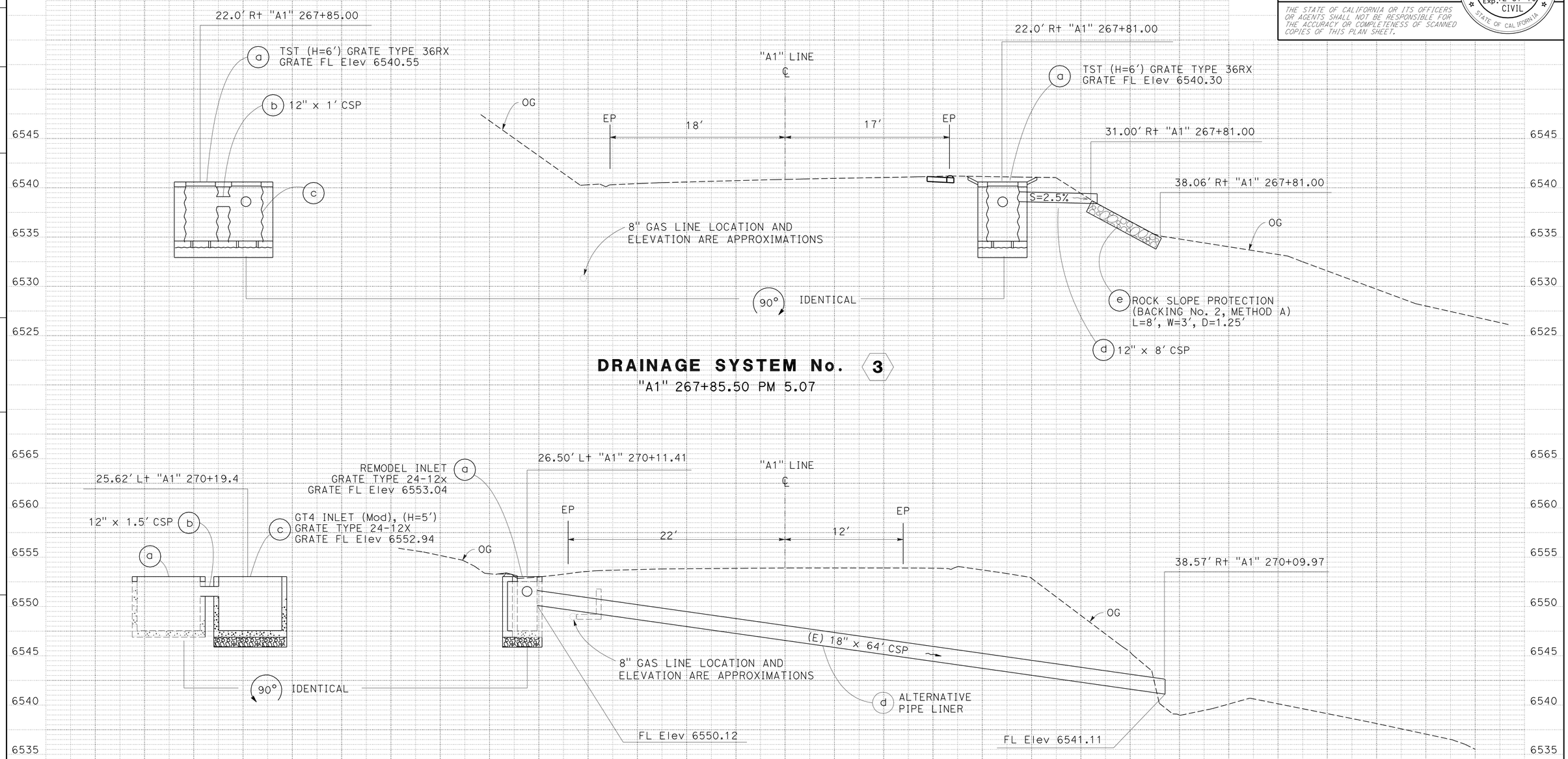

DRAINAGE PROFILES

SCALE: 1" = 5'

DP-2

STATE OF CALIFORNIA - DEPARTMENT OF TRANSPORTATION
Caltrans PROJECT DEVELOPMENT

FUNCTIONAL SUPERVISOR: MASTRI ALVANDI
CALCULATED-DESIGNED BY: CHARLES WOOTEN
CHECKED BY: RYAN KOHAGURA
REVISED BY / DATE REVISED

LAST REVISION 12-09-09
DATE PLOTTED => 12-APR-2010
TIME PLOTTED => 13:12

Dist	COUNTY	ROUTE	POST MILES TOTAL PROJECT	SHEET No.	TOTAL SHEETS
03	Pla	267	4.9/6.7	34	74

12-10-09
REGISTERED CIVIL ENGINEER DATE

4-12-10
PLANS APPROVAL DATE

REGISTERED PROFESSIONAL ENGINEER
RYAN S. KOHAGURA
No. C58535
Exp. 12-31-10
CIVIL
STATE OF CALIFORNIA

THE STATE OF CALIFORNIA OR ITS OFFICERS OR AGENTS SHALL NOT BE RESPONSIBLE FOR THE ACCURACY OR COMPLETENESS OF SCANNED COPIES OF THIS PLAN SHEET.

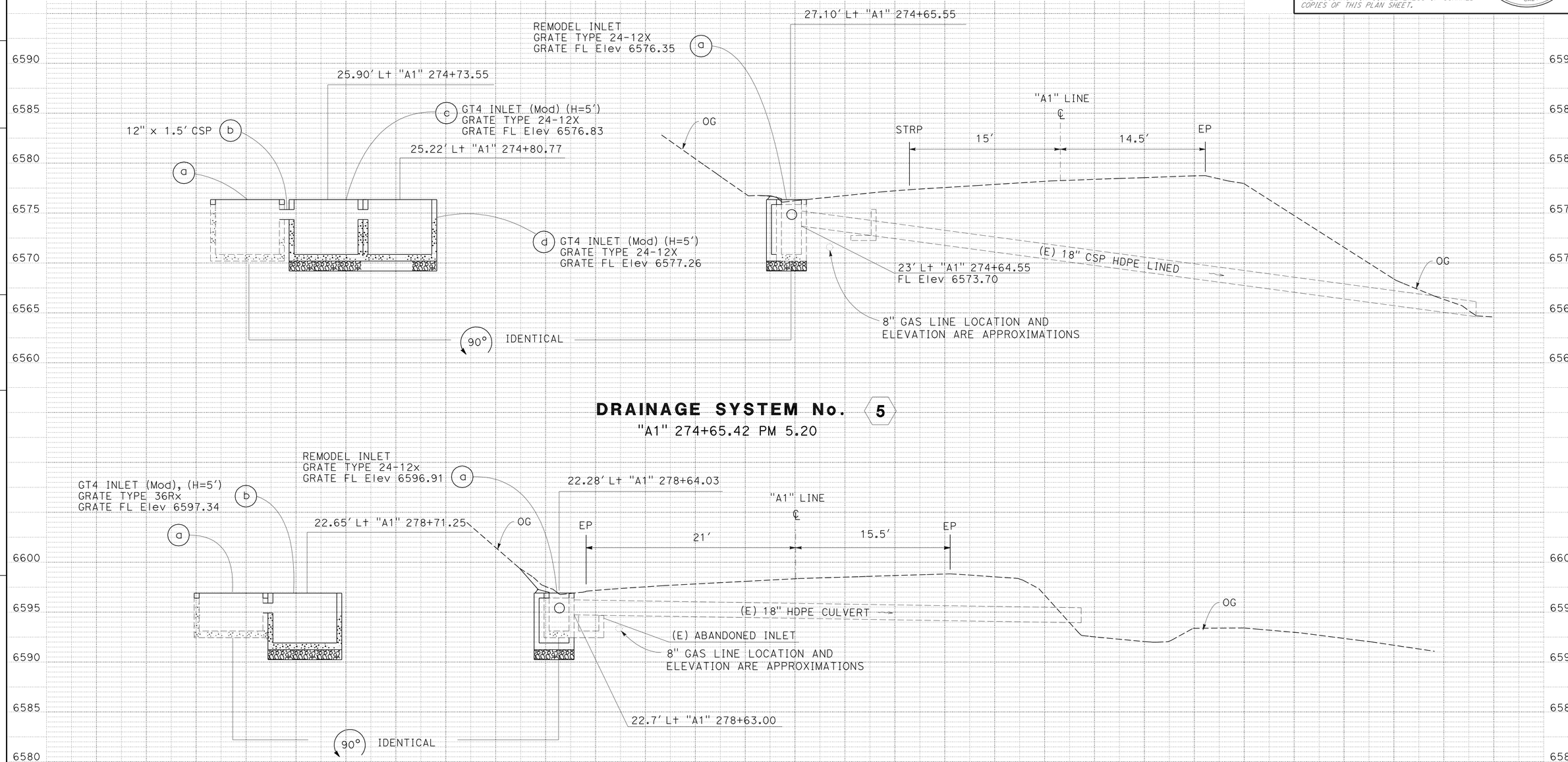

DRAINAGE SYSTEM No. 5
"A1" 274+65.42 PM 5.20

DRAINAGE SYSTEM No. 6
"A1" 278+64.11 PM 5.28

DRAINAGE PROFILES

SCALE: 1" = 5'

DP-3

STATE OF CALIFORNIA - DEPARTMENT OF TRANSPORTATION
Caltrans PROJECT DEVELOPMENT

FUNCTIONAL SUPERVISOR: MASTRI ALVANDI
CALCULATED-DESIGNED BY: CHARLES WOOTEN
CHECKED BY: RYAN KOHAGURA
REVISED BY
DATE REVISED

LAST REVISION 12-09-09
DATE PLOTTED => 12-APR-2010
TIME PLOTTED => 13:12

Dist	COUNTY	ROUTE	POST MILES TOTAL PROJECT	SHEET No.	TOTAL SHEETS
03	Pla	267	4.9/6.7	35	74

REGISTERED CIVIL ENGINEER DATE 12-10-09

4-12-10
PLANS APPROVAL DATE

REGISTERED PROFESSIONAL ENGINEER RYAN S. KOHAGURA No. C58535 Exp. 12-31-10 CIVIL STATE OF CALIFORNIA

THE STATE OF CALIFORNIA OR ITS OFFICERS OR AGENTS SHALL NOT BE RESPONSIBLE FOR THE ACCURACY OR COMPLETENESS OF SCANNED COPIES OF THIS PLAN SHEET.

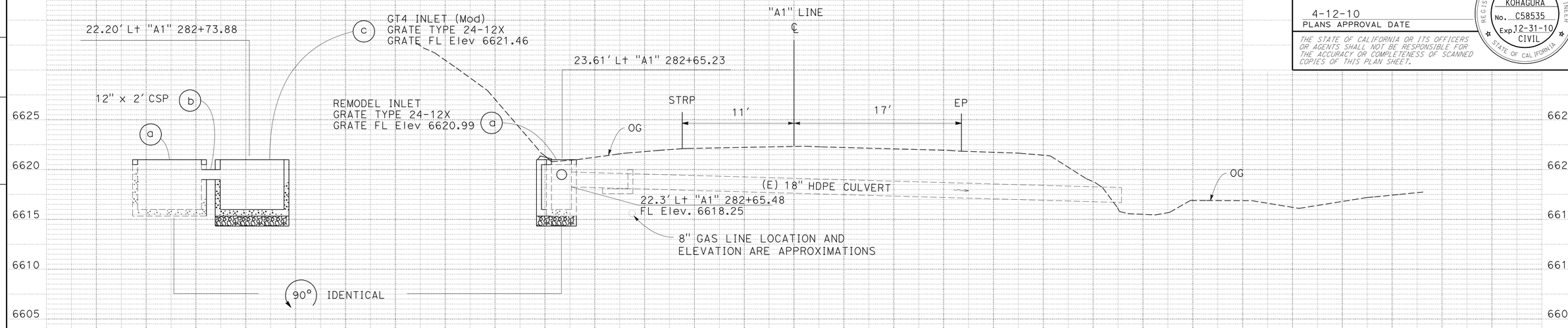

DRAINAGE SYSTEM No. 7

"A1" 282+65.23 PM 5.36

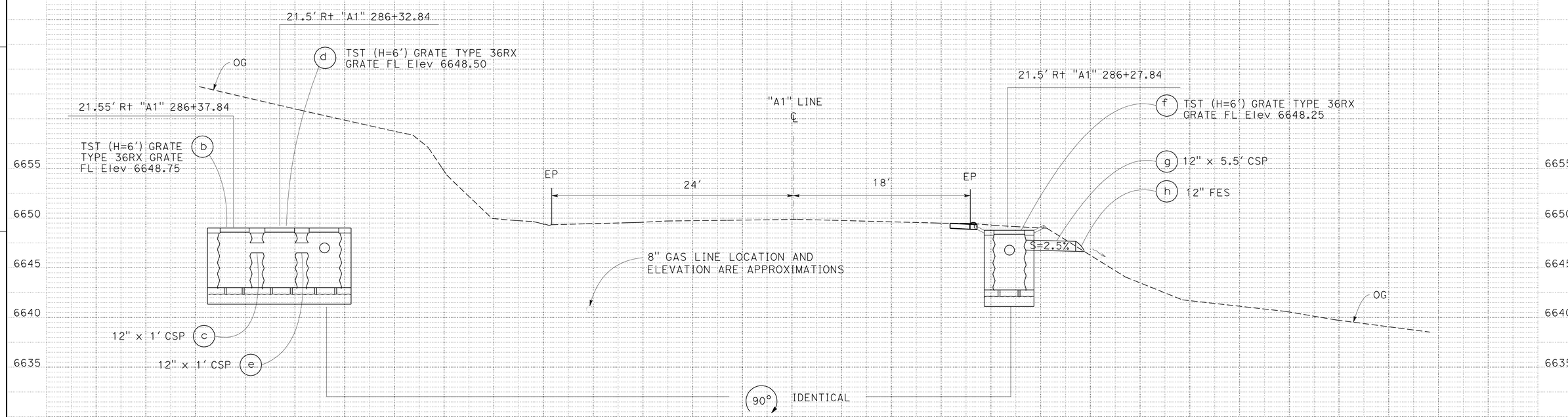

DRAINAGE SYSTEM No. 8

"A1" 286+37.84 PM 5.42

DRAINAGE PROFILES

SCALE: 1" = 5'

DP-4

STATE OF CALIFORNIA - DEPARTMENT OF TRANSPORTATION
Caltrans PROJECT DEVELOPMENT

FUNCTIONAL SUPERVISOR: MASTRI ALVANDI
CALCULATED-DESIGNED BY: CHARLES WOOTEN
CHECKED BY: RYAN KOHAGURA
REVISED BY
DATE REVISED

LAST REVISION 12-09-09
DATE PLOTTED => 12-APR-2010
TIME PLOTTED => 12:55

Dist	COUNTY	ROUTE	POST MILES TOTAL PROJECT	SHEET No.	TOTAL SHEETS
03	Pla	267	4.9/6.7	36	74

REGISTERED CIVIL ENGINEER 12-10-09 DATE

4-12-10
PLANS APPROVAL DATE

REGISTERED PROFESSIONAL ENGINEER
RYAN S. KOHAGURA
No. C58535
Exp. 12-31-10
CIVIL
STATE OF CALIFORNIA

THE STATE OF CALIFORNIA OR ITS OFFICERS OR AGENTS SHALL NOT BE RESPONSIBLE FOR THE ACCURACY OR COMPLETENESS OF SCANNED COPIES OF THIS PLAN SHEET.

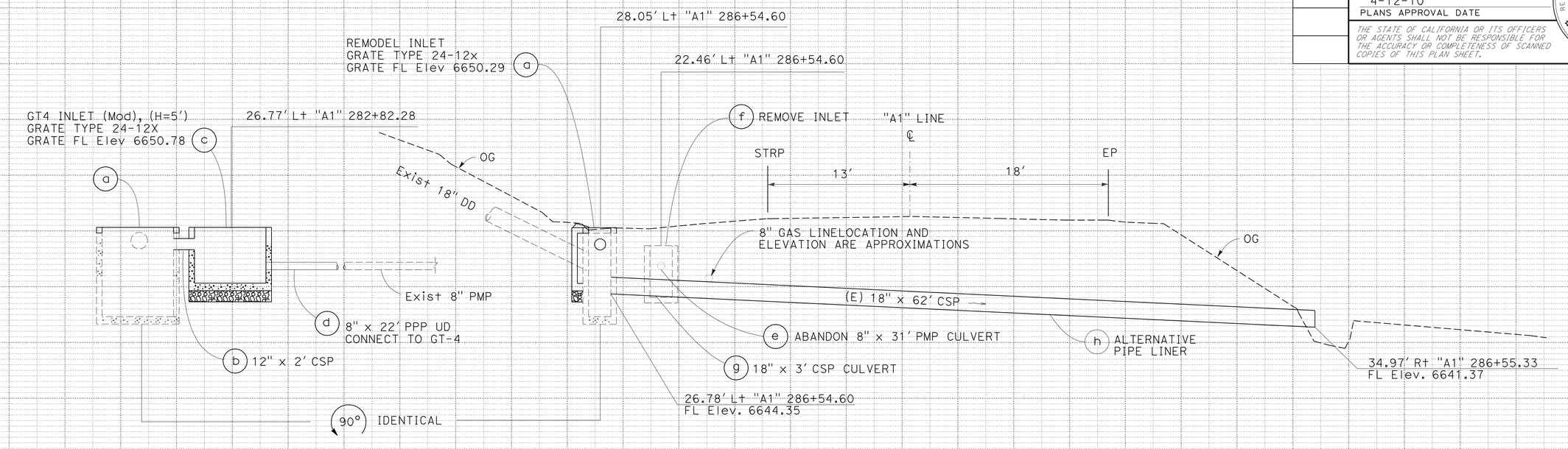

DRAINAGE SYSTEM No. 9

"A1" 286+54.91 PM 5.43

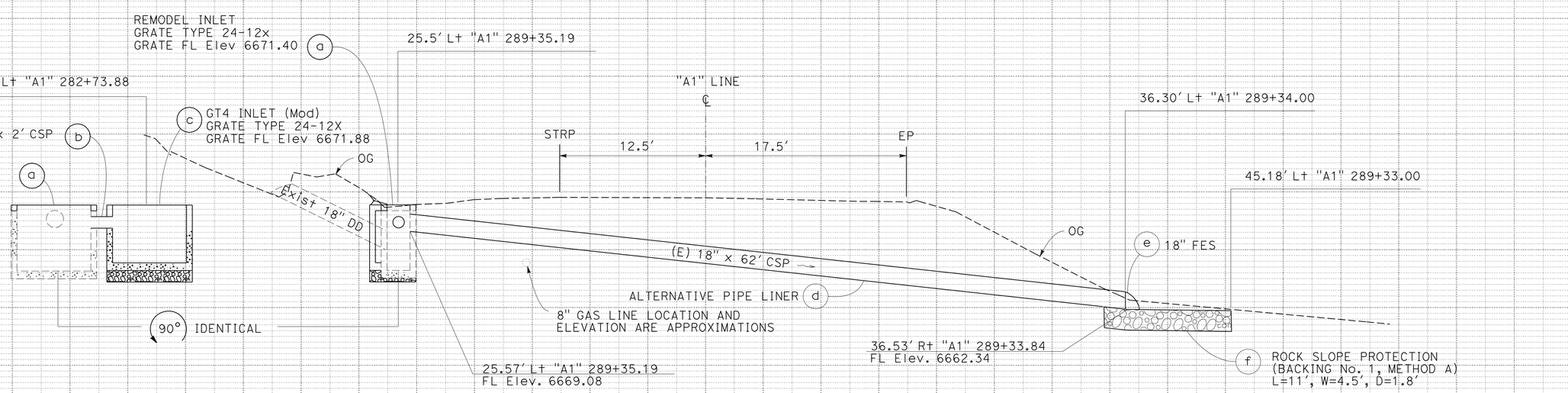

DRAINAGE SYSTEM No. 10

"A1" 289+34.47 PM 5.49

DRAINAGE PROFILES

SCALE: 1" = 5'

DP-5

REVISED BY	DATE REVISED
CHARLES WOOTEN	RYAN KOHAGURA
CALCULATED-DESIGNED BY	CHECKED BY
FUNCTIONAL SUPERVISOR	MASTRI ALVANDI

STATE OF CALIFORNIA - DEPARTMENT OF TRANSPORTATION
Caltrans PROJECT DEVELOPMENT

LAST REVISION 12-09-09 DATE PLOTTED => 12-APR-2010 TIME PLOTTED => 12:55

Dist	COUNTY	ROUTE	POST MILES TOTAL PROJECT	SHEET No.	TOTAL SHEETS
03	Pla	267	4.9/6.7	37	74

REGISTERED CIVIL ENGINEER 12-10-09 DATE

4-12-10
PLANS APPROVAL DATE

REGISTERED PROFESSIONAL ENGINEER RYAN S. KOHAGURA No. C58535 Exp. 12-31-10 CIVIL STATE OF CALIFORNIA

THE STATE OF CALIFORNIA OR ITS OFFICERS OR AGENTS SHALL NOT BE RESPONSIBLE FOR THE ACCURACY OR COMPLETENESS OF SCANNED COPIES OF THIS PLAN SHEET.

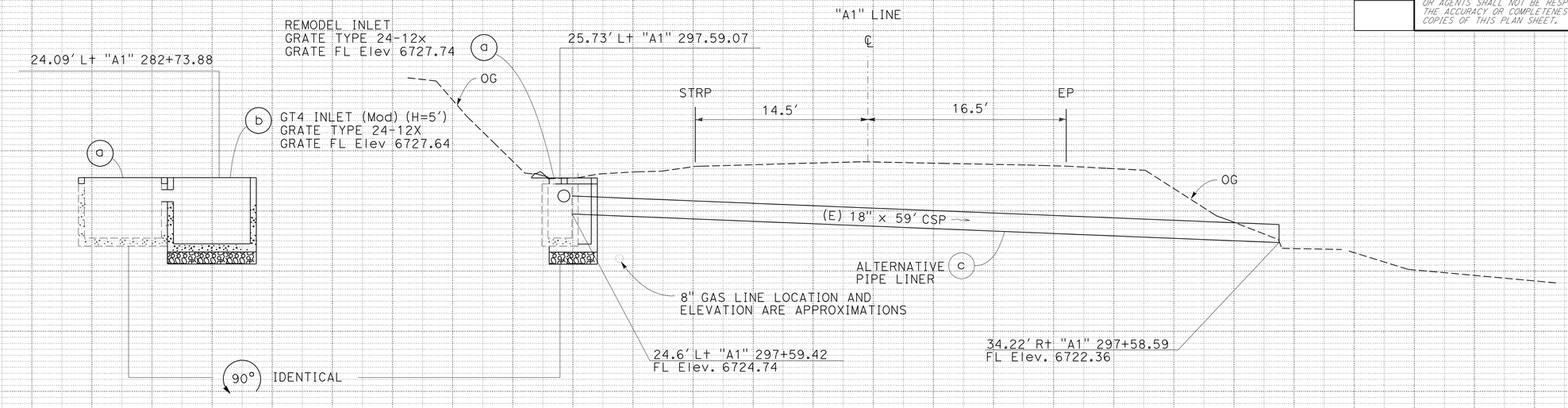

DRAINAGE SYSTEM No. 11
"A1" 297+59.07 PM 5.64

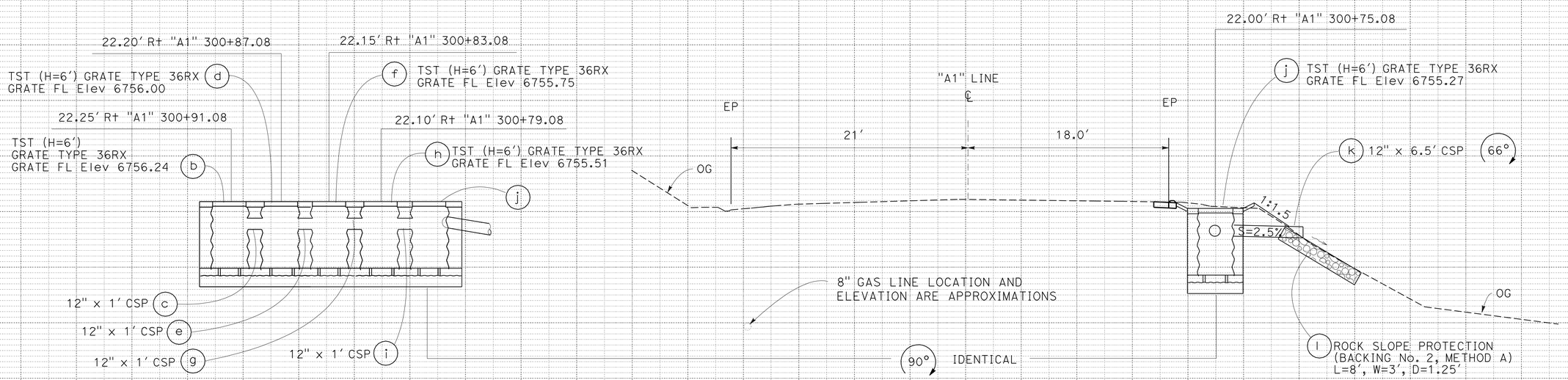

DRAINAGE SYSTEM No. 12
"A1" 300+75.08 PM 5.70

DRAINAGE PROFILES

SCALE: 1" = 5'

DP-6

REVISED BY | DATE REVISED
CHARLES WOOTEN | RYAN KOHAGURA
CALCULATED-DESIGNED BY | CHECKED BY
FUNCTIONAL SUPERVISOR | MASTRI ALVANDI

STATE OF CALIFORNIA - DEPARTMENT OF TRANSPORTATION
Caltrans

LAST REVISION 12-09-09 | DATE PLOTTED => 12-APR-2010 | TIME PLOTTED => 12:55

Dist	COUNTY	ROUTE	POST MILES TOTAL PROJECT	SHEET No.	TOTAL SHEETS
03	Pla	267	4.9/6.7	38	74

12-10-09
REGISTERED CIVIL ENGINEER DATE

4-12-10
PLANS APPROVAL DATE

REGISTERED PROFESSIONAL ENGINEER
RYAN S. KOHAGURA
No. C58535
Exp. 12-31-10
CIVIL
STATE OF CALIFORNIA

THE STATE OF CALIFORNIA OR ITS OFFICERS OR AGENTS SHALL NOT BE RESPONSIBLE FOR THE ACCURACY OR COMPLETENESS OF SCANNED COPIES OF THIS PLAN SHEET.

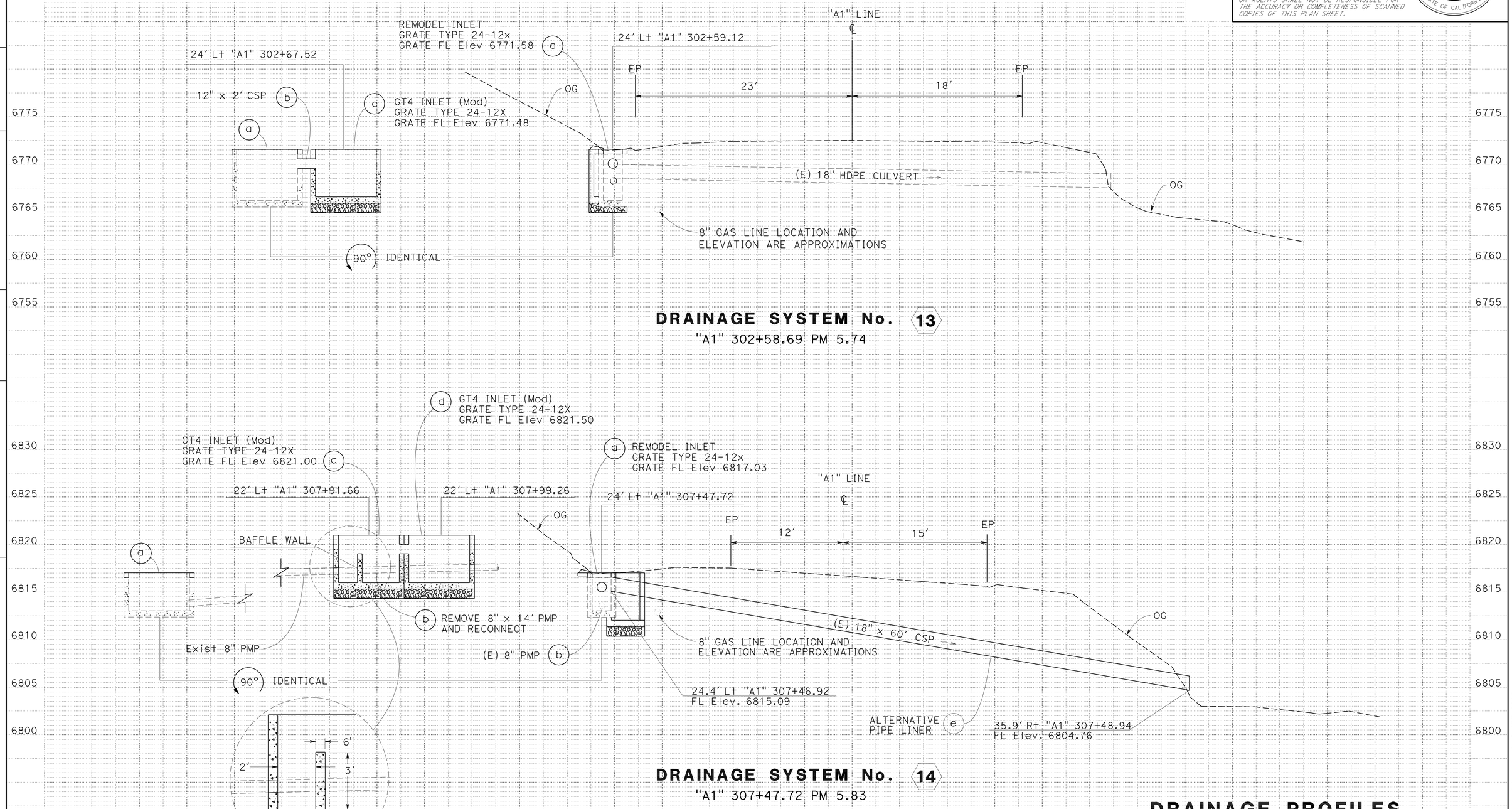

DRAINAGE PROFILES

SCALE: 1" = 5'

DP-7

STATE OF CALIFORNIA - DEPARTMENT OF TRANSPORTATION
Caltrans PROJECT DEVELOPMENT

FUNCTIONAL SUPERVISOR: MASTRI ALVANDI
CALCULATED-DESIGNED BY: RYAN KOHAGURA
CHECKED BY:
REVISED BY:
DATE REVISED:

LAST REVISION 12-09-09
DATE PLOTTED => 12-APR-2010
TIME PLOTTED => 12:55

Dist	COUNTY	ROUTE	POST MILES TOTAL PROJECT	SHEET No.	TOTAL SHEETS
03	Pla	267	4.9/6.7	39	74

REGISTERED CIVIL ENGINEER 12-10-09 DATE

4-12-10
PLANS APPROVAL DATE

REGISTERED PROFESSIONAL ENGINEER RYAN S. KOHAGURA No. C58535 Exp. 12-31-10 CIVIL STATE OF CALIFORNIA

THE STATE OF CALIFORNIA OR ITS OFFICERS OR AGENTS SHALL NOT BE RESPONSIBLE FOR THE ACCURACY OR COMPLETENESS OF SCANNED COPIES OF THIS PLAN SHEET.

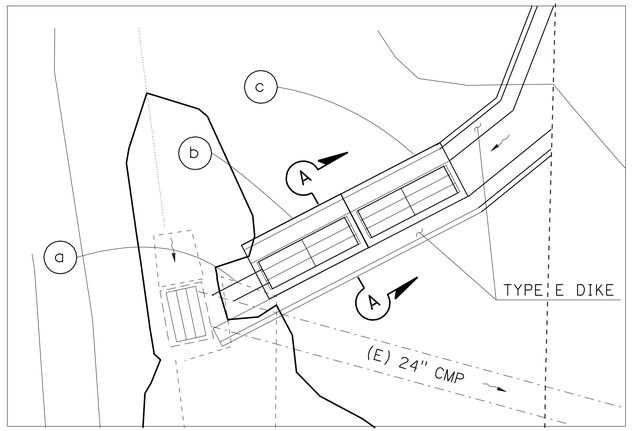

PLAN VIEW

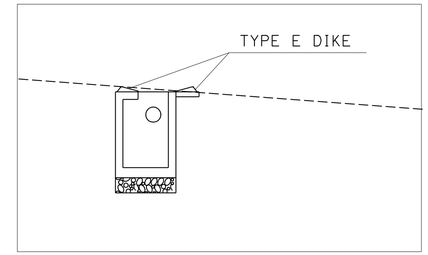

SECTION A-A

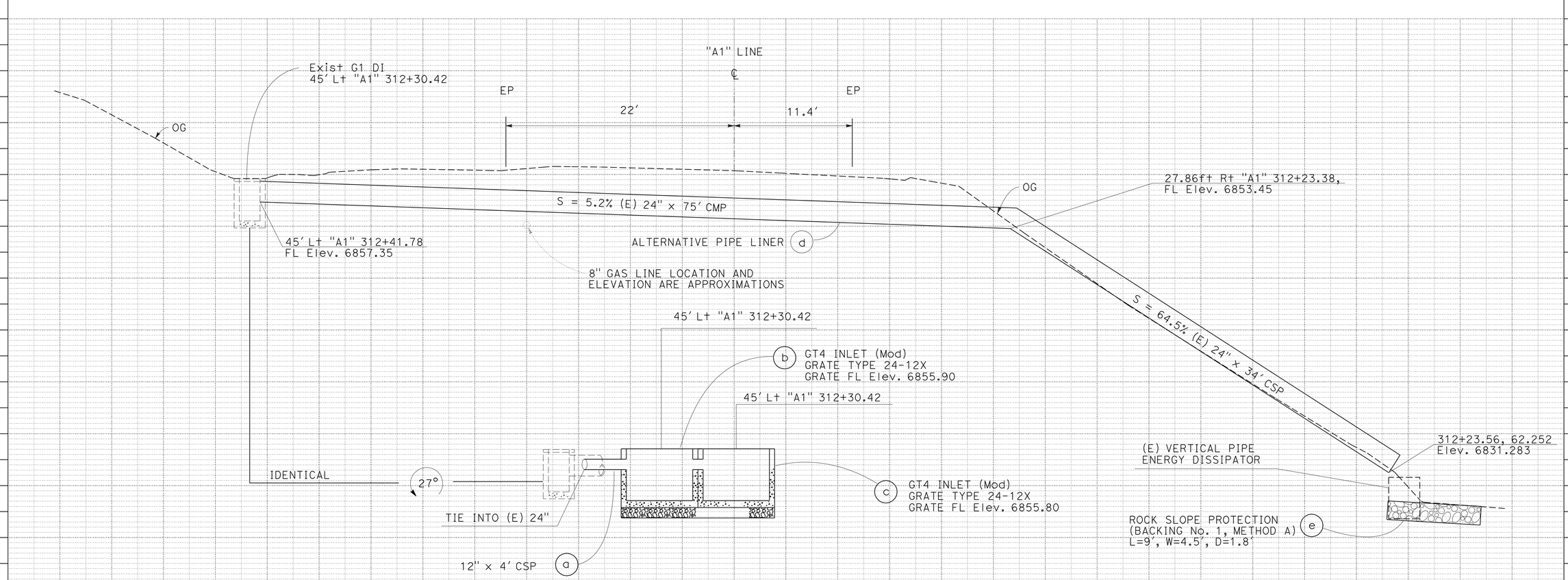

DRAINAGE SYSTEM No. 15

"A1" 312+30.42 PM 5.96

DRAINAGE PROFILES

SCALE: 1" = 5'

DP-8

STATE OF CALIFORNIA - DEPARTMENT OF TRANSPORTATION

Caltrans PROJECT DEVELOPMENT

FUNCTIONAL SUPERVISOR: MASTRI ALVANDI

CALCULATED-DESIGNED BY: CHARLES WOOTEN

CHECKED BY: RYAN KOHAGURA

REVISED BY

DATE REVISED

LAST REVISION 12-09-09

DATE PLOTTED => 12-APR-2010
TIME PLOTTED => 12:55

Dist	COUNTY	ROUTE	POST MILES TOTAL PROJECT	SHEET No.	TOTAL SHEETS
03	Pla	267	4.9/6.7	40	74

Ryan S. Kohagura 12-10-09
REGISTERED CIVIL ENGINEER DATE

4-12-10
PLANS APPROVAL DATE

REGISTERED PROFESSIONAL ENGINEER
RYAN S. KOHAGURA
No. C58535
Exp. 12-31-10
CIVIL
STATE OF CALIFORNIA

THE STATE OF CALIFORNIA OR ITS OFFICERS OR AGENTS SHALL NOT BE RESPONSIBLE FOR THE ACCURACY OR COMPLETENESS OF SCANNED COPIES OF THIS PLAN SHEET.

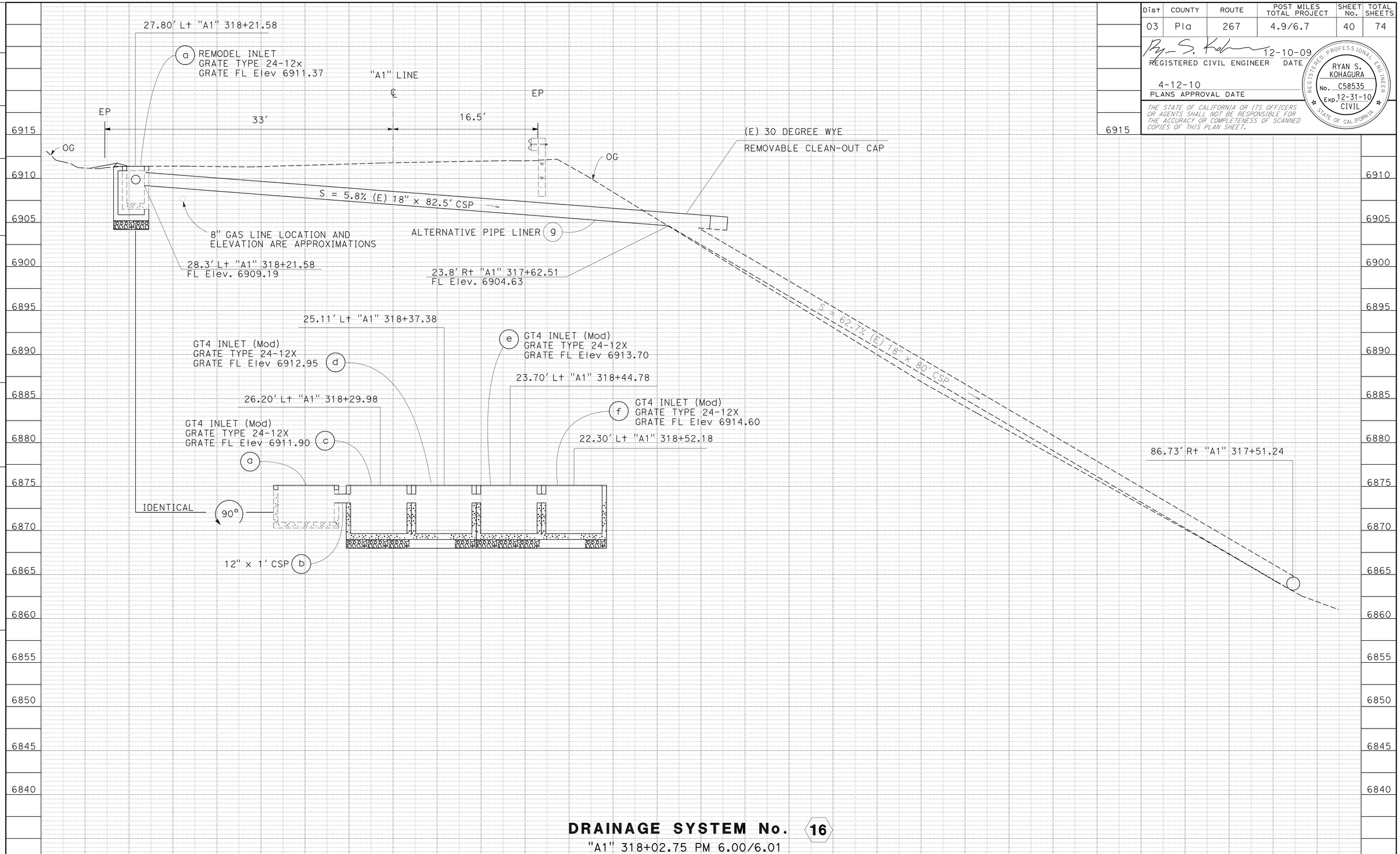

DRAINAGE SYSTEM No. 16
"A1" 318+02.75 PM 6.00/6.01

DRAINAGE PROFILES

SCALE: 1" = 5'

DP-9

STATE OF CALIFORNIA - DEPARTMENT OF TRANSPORTATION
Caltrans PROJECT DEVELOPMENT

FUNCTIONAL SUPERVISOR: MASTRI ALVANDI
CALCULATED-DESIGNED BY: RYAN KOHAGURA
CHECKED BY: CHARLES WOOTEN
REVISED BY / DATE REVISED

LAST REVISION DATE PLOTTED => 12-APR-2010
TIME PLOTTED => 12:55
12-09-09

BORDER LAST REVISED 4/11/2008
RELATIVE BORDER SCALE IS IN INCHES 0 1 2 3
USERNAME => trpierce
DGN FILE => 30E990ib009.dgn
CU 03267
EA 0E9901

Dist	COUNTY	ROUTE	POST MILES TOTAL PROJECT	SHEET No.	TOTAL SHEETS
03	Pla	267	4.9/6.7	41	74

REGISTERED CIVIL ENGINEER 12-10-09 DATE

4-12-10
PLANS APPROVAL DATE

REGISTERED PROFESSIONAL ENGINEER
RYAN S. KOHAGURA
No. C58535
Exp. 12-31-10
CIVIL
STATE OF CALIFORNIA

THE STATE OF CALIFORNIA OR ITS OFFICERS OR AGENTS SHALL NOT BE RESPONSIBLE FOR THE ACCURACY OR COMPLETENESS OF SCANNED COPIES OF THIS PLAN SHEET.

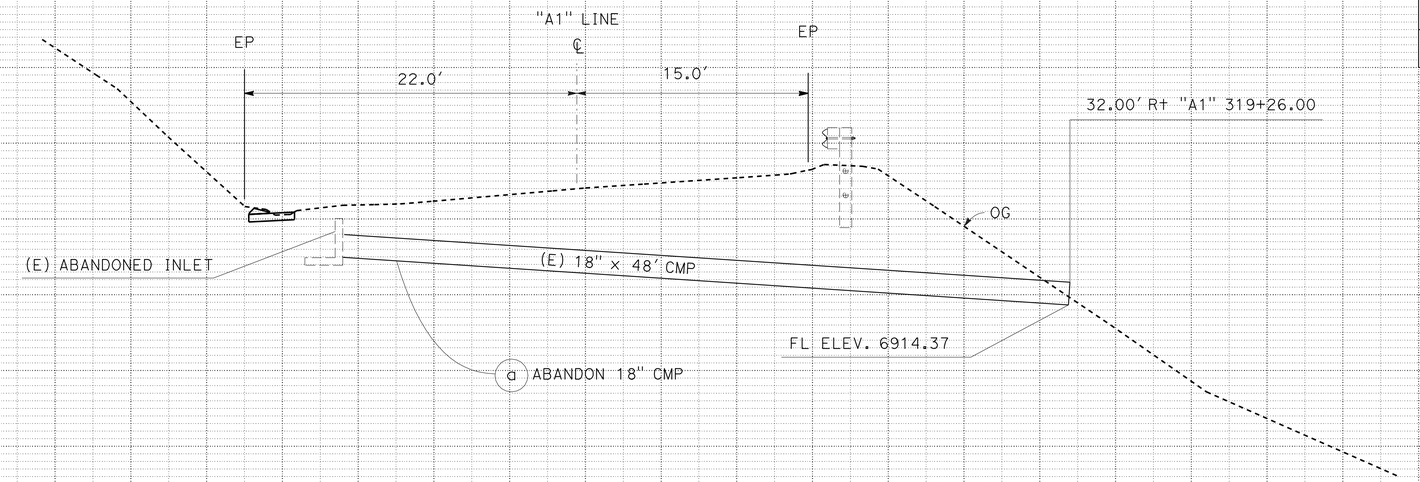

DRAINAGE SYSTEM No. 17
"A1" 319+22.00 PM 6.03

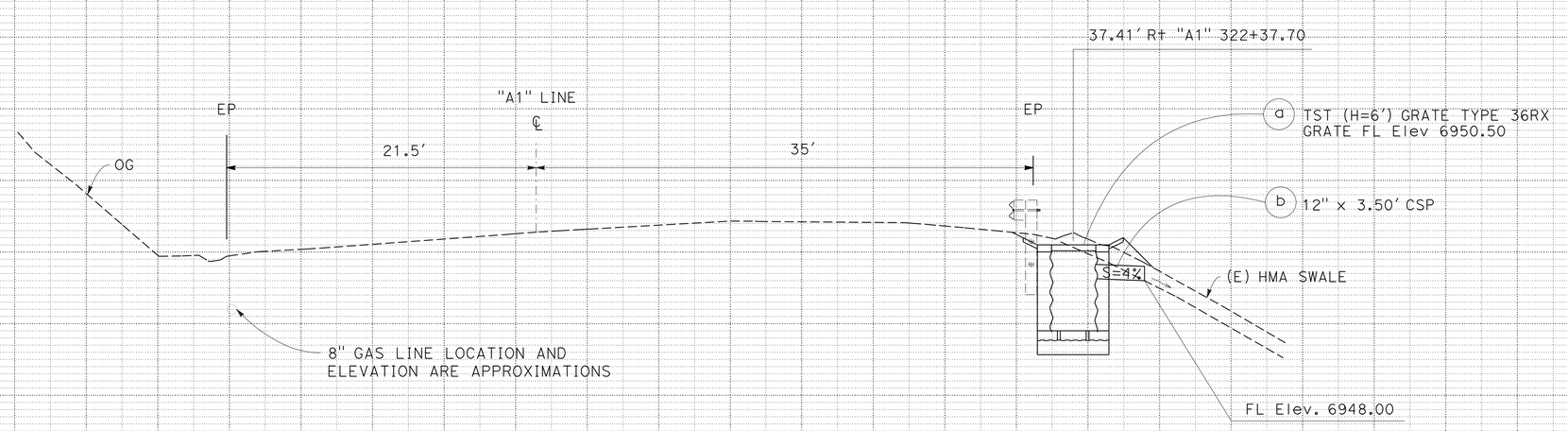

DRAINAGE SYSTEM No. 18
"A1" 322+37.70 PM 6.09

DRAINAGE PROFILES

SCALE: 1" = 5′

DP-10

STATE OF CALIFORNIA - DEPARTMENT OF TRANSPORTATION
Caltrans PROJECT DEVELOPMENT

FUNCTIONAL SUPERVISOR: MASTRI ALVANDI
CALCULATED-DESIGNED BY: CHARLES WOOTEN
CHECKED BY: RYAN KOHAGURA
REVISED BY / DATE REVISED

LAST REVISION 12-09-09
DATE PLOTTED => 12-APR-2010
TIME PLOTTED => 12:51

Dist	COUNTY	ROUTE	POST MILES TOTAL PROJECT	SHEET No.	TOTAL SHEETS
03	Pla	267	4.9/6.7	42	74

REGISTERED CIVIL ENGINEER 12-10-09 DATE

4-12-10
PLANS APPROVAL DATE

REGISTERED PROFESSIONAL ENGINEER
RYAN S. KOHAGURA
No. C58535
Exp. 12-31-10
CIVIL
STATE OF CALIFORNIA

THE STATE OF CALIFORNIA OR ITS OFFICERS OR AGENTS SHALL NOT BE RESPONSIBLE FOR THE ACCURACY OR COMPLETENESS OF SCANNED COPIES OF THIS PLAN SHEET.

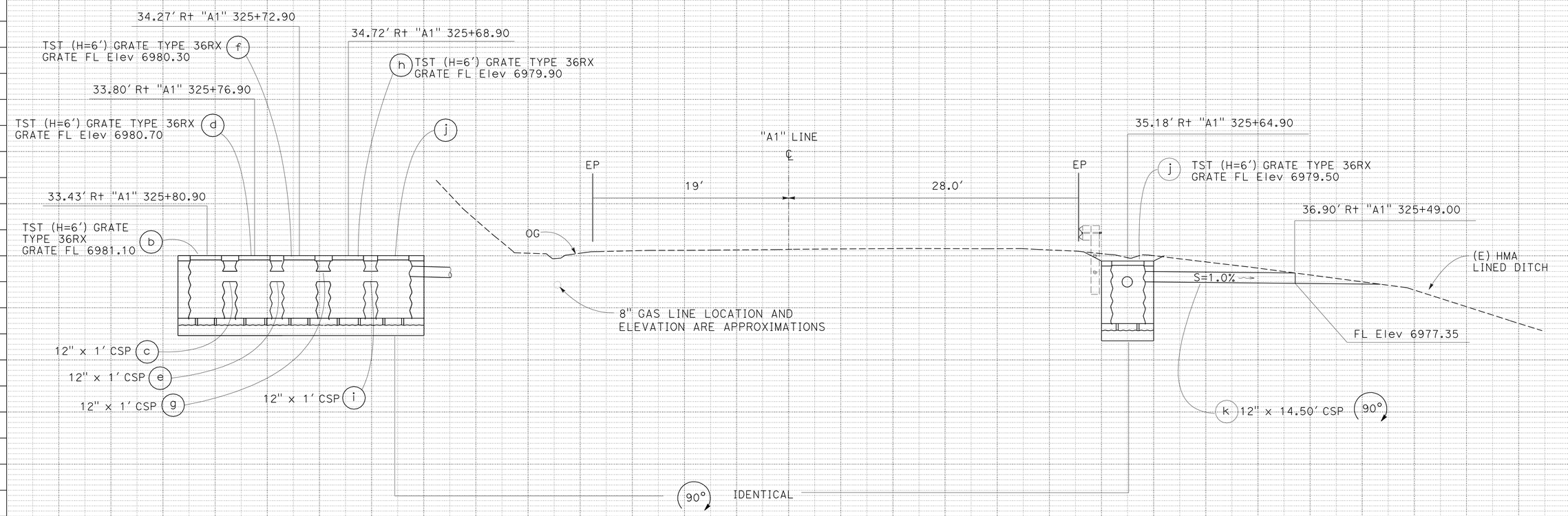

DRAINAGE SYSTEM No. 19
"A1" 325+91.40 PM 6.16

DRAINAGE PROFILES

SCALE: 1" = 5′

DP-11

STATE OF CALIFORNIA - DEPARTMENT OF TRANSPORTATION
Caltrans PROJECT DEVELOPMENT

FUNCTIONAL SUPERVISOR: MASTRI ALVANDI
CALCULATED-DESIGNED BY: RYAN KOHAGURA
CHECKED BY: CHARLES WOOTEN
REVISED BY
DATE REVISED

LAST REVISION 12-09-09
DATE PLOTTED => 12-APR-2010
TIME PLOTTED => 12:51

Dist	COUNTY	ROUTE	POST MILES TOTAL PROJECT	SHEET No.	TOTAL SHEETS
03	Pla	267	4.9/6.7	43	74

REGISTERED CIVIL ENGINEER 12-10-09 DATE

4-12-10
PLANS APPROVAL DATE

REGISTERED PROFESSIONAL ENGINEER RYAN S. KOHAGURA No. C58535 Exp. 12-31-10 CIVIL STATE OF CALIFORNIA

THE STATE OF CALIFORNIA OR ITS OFFICERS OR AGENTS SHALL NOT BE RESPONSIBLE FOR THE ACCURACY OR COMPLETENESS OF SCANNED COPIES OF THIS PLAN SHEET.

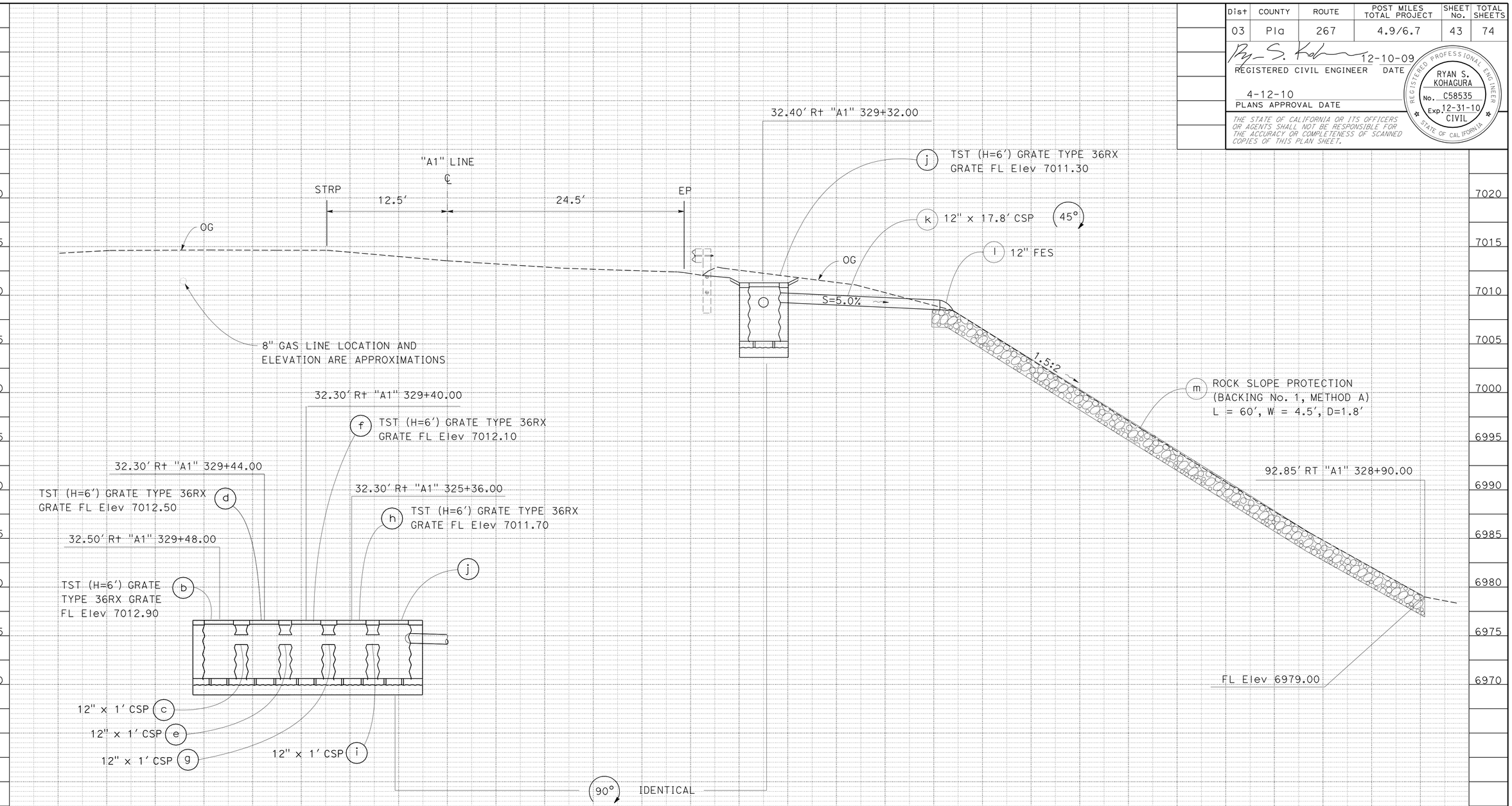

DRAINAGE SYSTEM No. 20

"A1" 329+50.00 PM 6.23

DRAINAGE PROFILES

SCALE: 1" = 5'

DP-12

REVISED BY | DATE REVISED
CHARLES WOOTEN | RYAN KOHAGURA
CALCULATED-DESIGNED BY | CHECKED BY
FUNCTIONAL SUPERVISOR | MASTRI ALVANDI

STATE OF CALIFORNIA - DEPARTMENT OF TRANSPORTATION
Caltrans PROJECT DEVELOPMENT

LAST REVISION 12-09-09 | DATE PLOTTED => 12-APR-2010 | TIME PLOTTED => 12:51

Dist	COUNTY	ROUTE	POST MILES TOTAL PROJECT	SHEET No.	TOTAL SHEETS
03	Pla	267	4.9/6.7	44	74

12-10-09
REGISTERED CIVIL ENGINEER DATE

4-12-10
PLANS APPROVAL DATE

REGISTERED PROFESSIONAL ENGINEER
RYAN S. KOHAGURA
No. C58535
Exp. 12-31-10
CIVIL
STATE OF CALIFORNIA

THE STATE OF CALIFORNIA OR ITS OFFICERS OR AGENTS SHALL NOT BE RESPONSIBLE FOR THE ACCURACY OR COMPLETENESS OF SCANNED COPIES OF THIS PLAN SHEET.

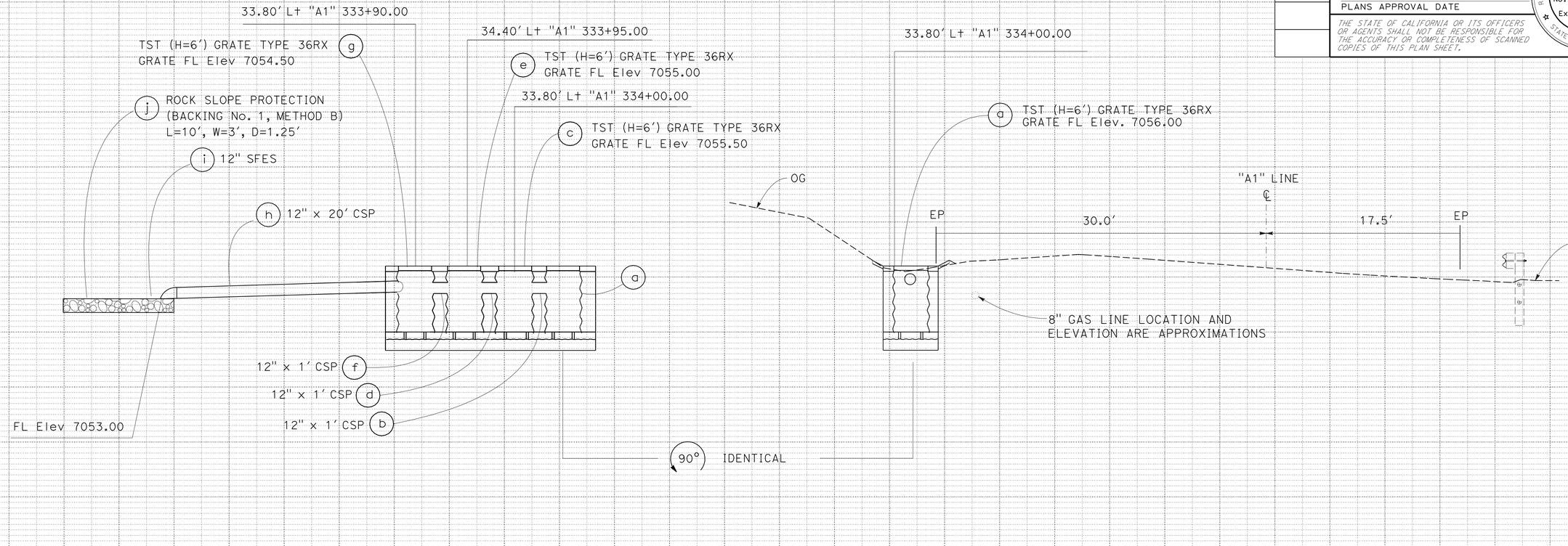

DRAINAGE SYSTEM No. 21
"A1" 334+00.00

DRAINAGE PROFILES

SCALE: 1" = 5'

DP-13

REVISED BY | DATE REVISED
CHARLES WOOTEN | RYAN KOHAGURA
CALCULATED-DESIGNED BY | CHECKED BY
FUNCTIONAL SUPERVISOR | MASTRI ALVANDI

STATE OF CALIFORNIA - DEPARTMENT OF TRANSPORTATION
Caltrans PROJECT DEVELOPMENT

LAST REVISION 12-09-09 | DATE PLOTTED => 12-APR-2010 | TIME PLOTTED => 12:51

Dist	COUNTY	ROUTE	POST MILES TOTAL PROJECT	SHEET No.	TOTAL SHEETS
03	Pla	267	4.9/6.7	45	74

REGISTERED CIVIL ENGINEER 12-10-09 DATE

4-12-10
PLANS APPROVAL DATE

REGISTERED PROFESSIONAL ENGINEER
RYAN S. KOHAGURA
No. C58535
Exp. 12-31-10
CIVIL
STATE OF CALIFORNIA

THE STATE OF CALIFORNIA OR ITS OFFICERS OR AGENTS SHALL NOT BE RESPONSIBLE FOR THE ACCURACY OR COMPLETENESS OF SCANNED COPIES OF THIS PLAN SHEET.

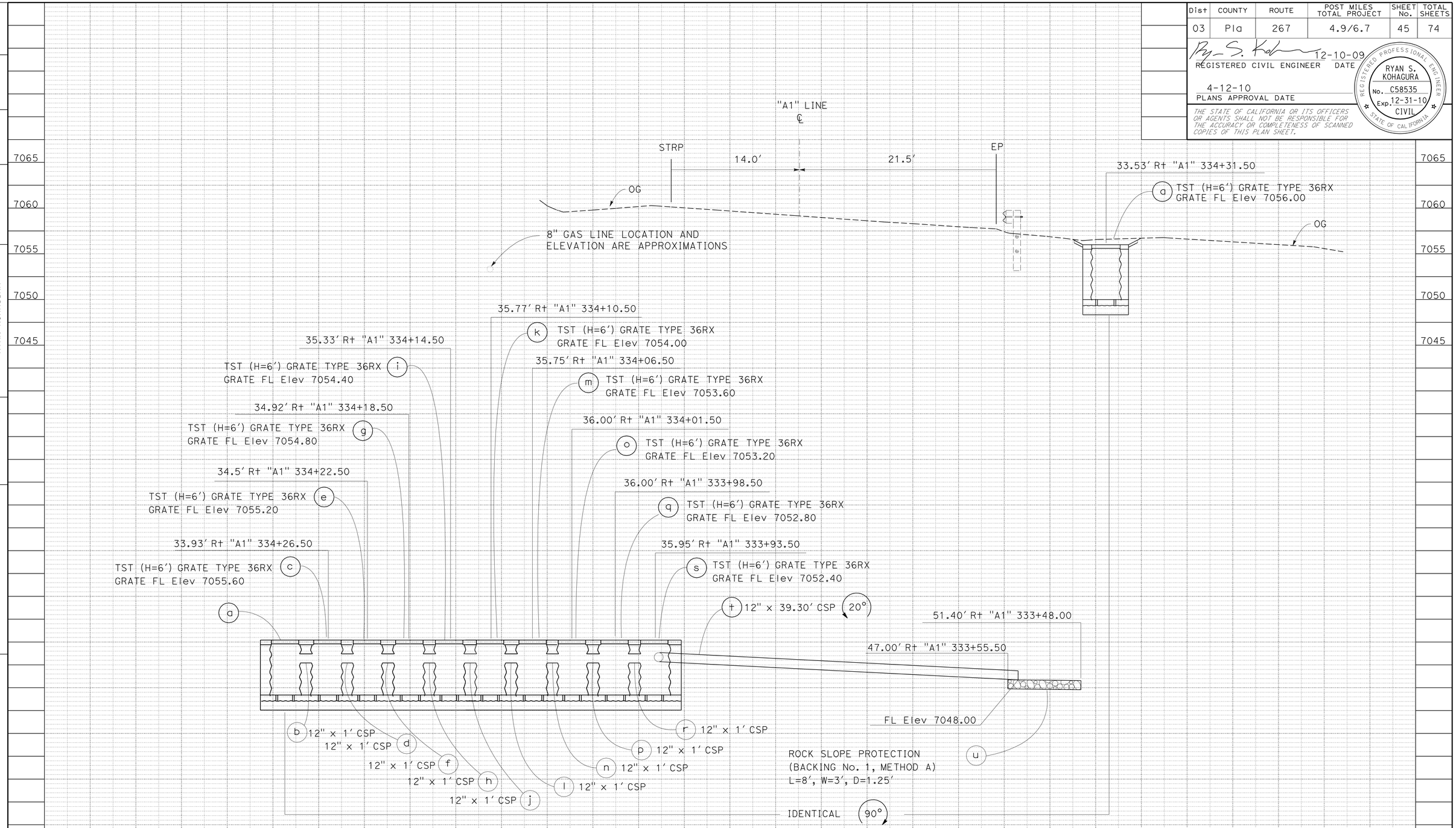

DRAINAGE SYSTEM No. 22

"A1" 334+31.50

DRAINAGE PROFILES

SCALE: 1" = 5′

DP-14

STATE OF CALIFORNIA - DEPARTMENT OF TRANSPORTATION
Caltrans PROJECT DEVELOPMENT

FUNCTIONAL SUPERVISOR: MASTRI ALVANDI
CALCULATED-DESIGNED BY: RYAN KOHAGURA
CHECKED BY: CHARLES WOOTEN
REVISED BY
DATE REVISED

LAST REVISION 12-09-09 DATE PLOTTED => 12-APR-2010 TIME PLOTTED => 12:51

Dist	COUNTY	ROUTE	POST MILES TOTAL PROJECT	SHEET No.	TOTAL SHEETS
03	Pla	267	4.9/6.7	46	74

James M. Phillipp 12-10-09
REGISTERED CIVIL ENGINEER DATE

4-12-10
PLANS APPROVAL DATE

REGISTERED PROFESSIONAL ENGINEER JAMES M. PHILLIPP No. 59614 Exp. 12-31-09 CIVIL STATE OF CALIFORNIA

THE STATE OF CALIFORNIA OR ITS OFFICERS OR AGENTS SHALL NOT BE RESPONSIBLE FOR THE ACCURACY OR COMPLETENESS OF SCANNED COPIES OF THIS PLAN SHEET.

NOTE:
FOR DETAILS NOT SHOWN, SEE STD PLAN D73 & D74A.

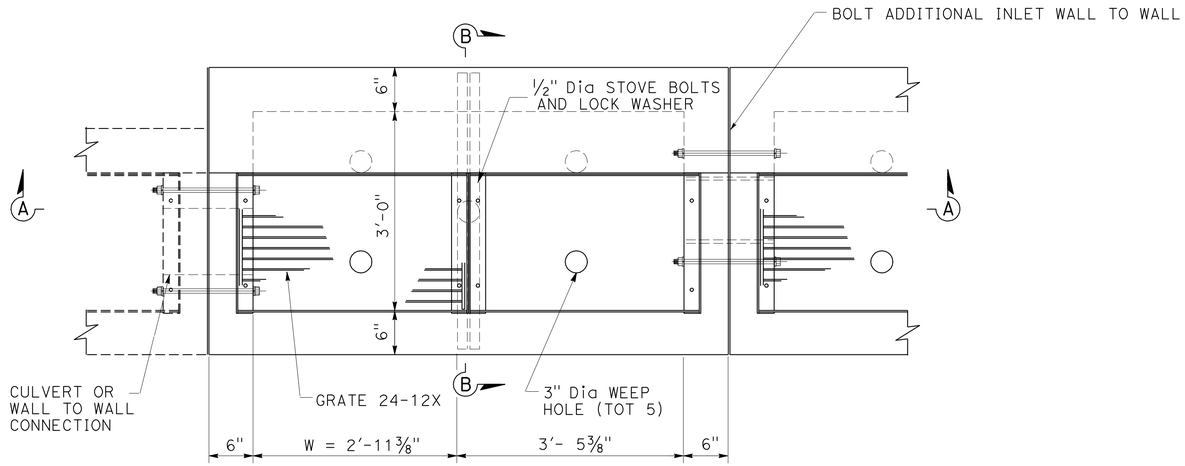

PLAN

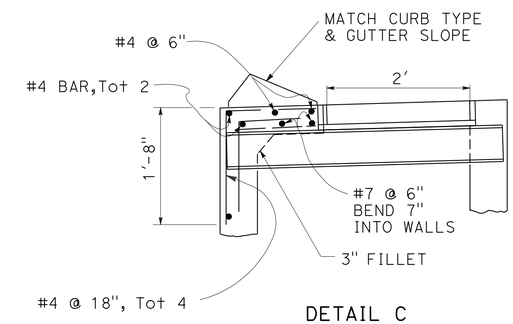

DETAIL C

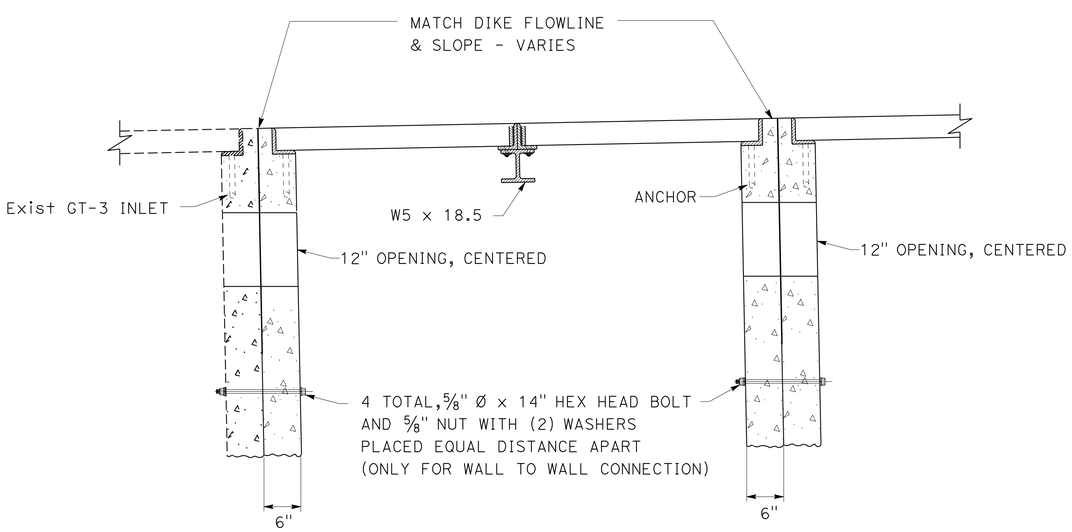

SECTION A-A

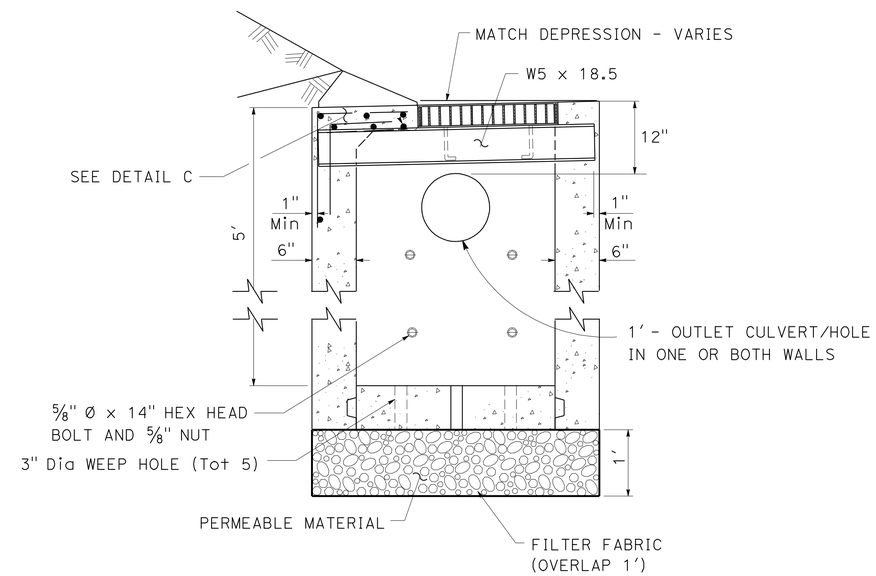

SECTION B-B

DRAINAGE SYSTEM No. 1 4 5 6 7 9 10 11 13 14 15 16

TYPE GT4 (Mod) DI W/SAND TRAP

DRAINAGE DETAILS

NO SCALE

DD-1

STATE OF CALIFORNIA - DEPARTMENT OF TRANSPORTATION
Caltrans
HYDRAULICS
FUNCTIONAL SUPERVISOR: MASTRI ALVANDI
CALCULATED-DESIGNED BY: CHARLES WOOTEN
CHECKED BY: RYAN KOHAGURA
REVISED BY
DATE REVISED

LAST REVISION 12-09-09
DATE PLOTTED => 12-APR-2010
TIME PLOTTED => 13:19

Dist	COUNTY	ROUTE	POST MILES TOTAL PROJECT	SHEET No.	TOTAL SHEETS
03	Pla	267	4.9/6.7	47	74

REGISTERED CIVIL ENGINEER 12-10-09 DATE

4-12-10
PLANS APPROVAL DATE

REGISTERED PROFESSIONAL ENGINEER JAMES M. PHILLIPP No. 59614 Exp. 12-31-09 CIVIL STATE OF CALIFORNIA

THE STATE OF CALIFORNIA OR ITS OFFICERS OR AGENTS SHALL NOT BE RESPONSIBLE FOR THE ACCURACY OR COMPLETENESS OF SCANNED COPIES OF THIS PLAN SHEET.

NOTE:

FOR DETAILS NOT SHOWN, SEE STD PLAN D74A & D74B.

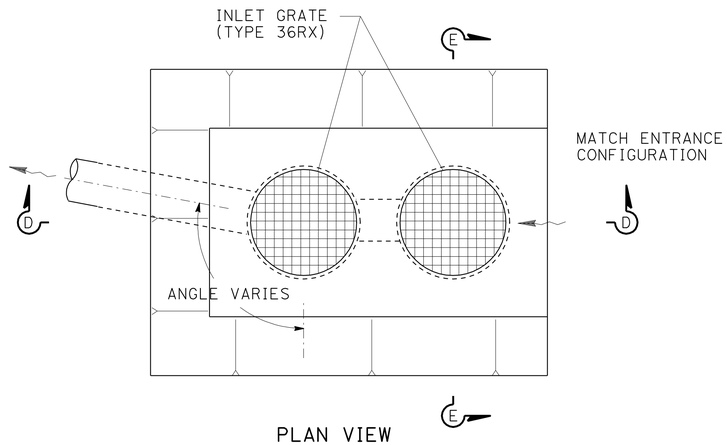

PLAN VIEW

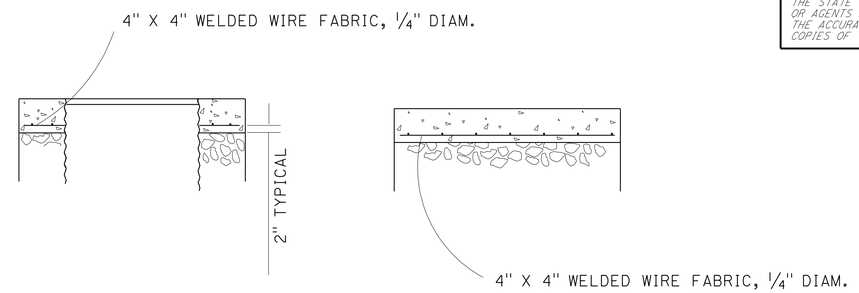

PCC CAP DETAIL

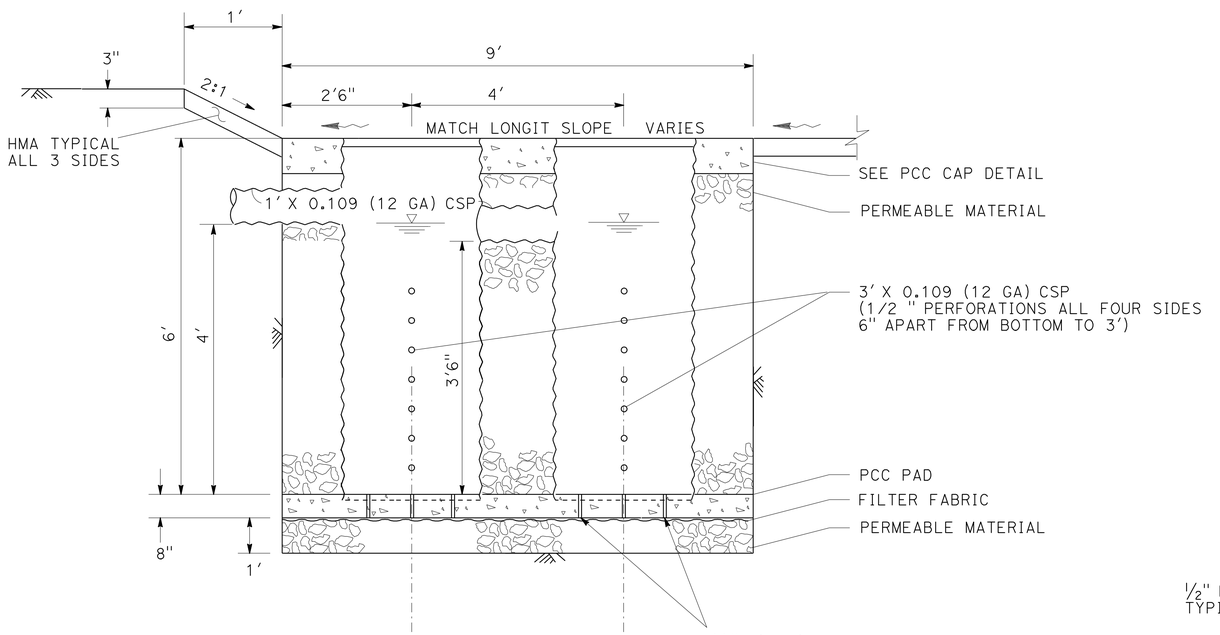

SECTION D-D

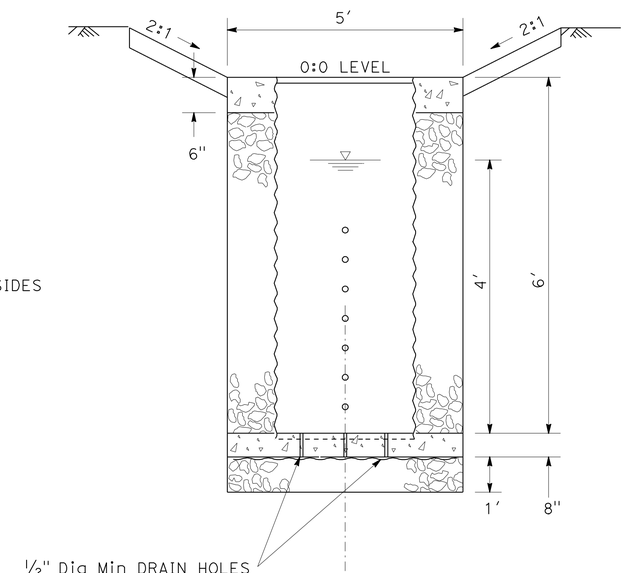

SECTION E-E

TRACTION SAND TRAP (TST)
TYPICAL

3 8 12 18 19 20 21 22

DRAINAGE DETAILS

NO SCALE

DD-2

STATE OF CALIFORNIA - DEPARTMENT OF TRANSPORTATION
Caltrans
HYDRAULICS

FUNCTIONAL SUPERVISOR: MASTRI ALVANDI
CALCULATED-DESIGNED BY: CHARLES WOOTEN
CHECKED BY: RYAN KOHAGURA
REVISED BY
DATE REVISED

LAST REVISION 12-09-09
DATE PLOTTED => 12-APR-2010
TIME PLOTTED => 13:19

Dist	COUNTY	ROUTE	POST MILES TOTAL PROJECT	SHEET No.	TOTAL SHEETS
03	Pla	267	4.9/6.7	48	74

REGISTERED CIVIL ENGINEER 12-10-09 DATE

4-12-10
PLANS APPROVAL DATE

REGISTERED PROFESSIONAL ENGINEER JAMES M. PHILLIPP No. 59614 Exp. 12-31-09 CIVIL STATE OF CALIFORNIA

THE STATE OF CALIFORNIA OR ITS OFFICERS OR AGENTS SHALL NOT BE RESPONSIBLE FOR THE ACCURACY OR COMPLETENESS OF SCANNED COPIES OF THIS PLAN SHEET.

NOTE:

FOR DETAILS NOT SHOWN, SEE STD PLAN D74A & D74B.

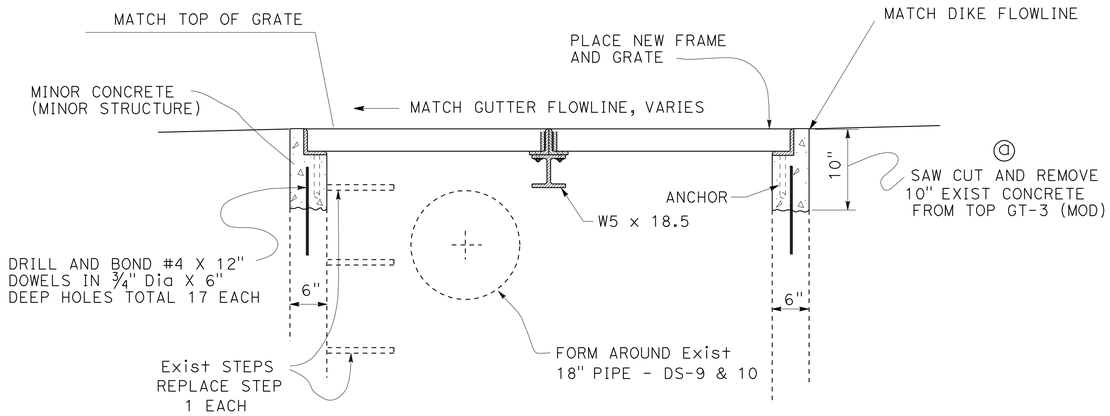

SECTION A-A

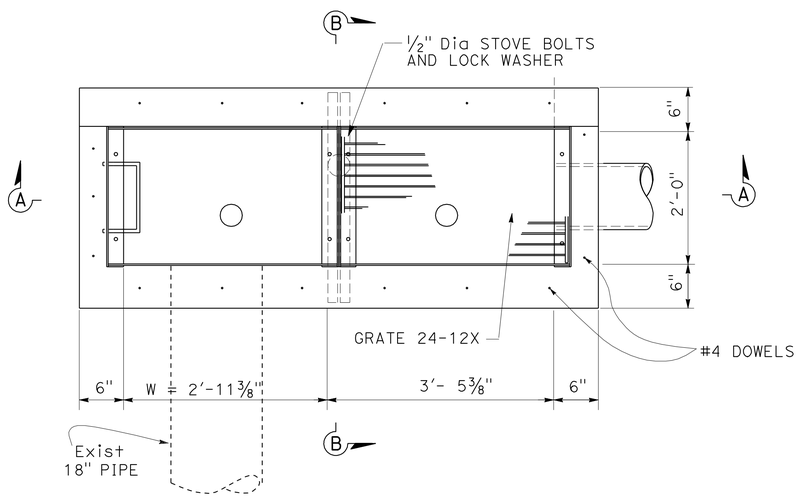

PLAN

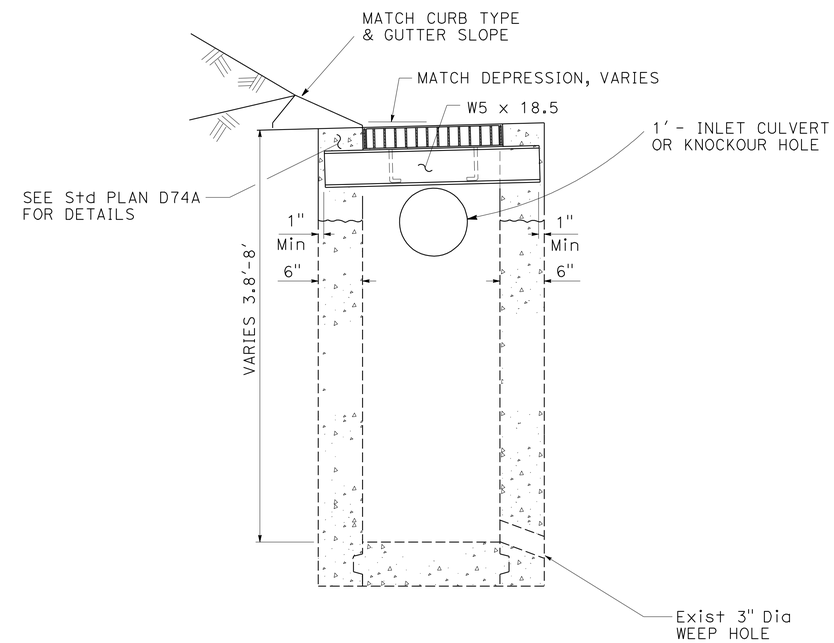

SECTION B-B

DRAINAGE SYSTEM No. 1 4 5 6 7 9 10 11 13 14 15 16

TYPE GT3 (Mod) DI W/SAND TRAP REMODEL

DRAINAGE DETAILS

NO SCALE

DD-3

STATE OF CALIFORNIA - DEPARTMENT OF TRANSPORTATION
Caltrans
HYDRAULICS

FUNCTIONAL SUPERVISOR: MASTRI ALVANDI
CALCULATED-DESIGNED BY: RYAN KOHAGURA
CHECKED BY: CHARLES WOOTEN
REVISED BY
DATE REVISED

LAST REVISION 12-09-09
DATE PLOTTED => 12-APR-2010
TIME PLOTTED => 13:19

Dist	COUNTY	ROUTE	POST MILES TOTAL PROJECT	SHEET No.	TOTAL SHEETS
03	Pla	267	4.9/6.7	49	74

REGISTERED CIVIL ENGINEER 12-10-09 DATE

4-12-10
PLANS APPROVAL DATE

REGISTERED PROFESSIONAL ENGINEER JAMES M. PHILLIPP No. 59614 Exp. 12-31-09 CIVIL STATE OF CALIFORNIA

THE STATE OF CALIFORNIA OR ITS OFFICERS OR AGENTS SHALL NOT BE RESPONSIBLE FOR THE ACCURACY OR COMPLETENESS OF SCANNED COPIES OF THIS PLAN SHEET.

NOTE:

TOP OF ROCK TO BE FLUSH WITH GROUND. DO NOT EXPOSE RSP FABRIC ABOVE GRADE.
D = DIAMETER, L = LENGTH

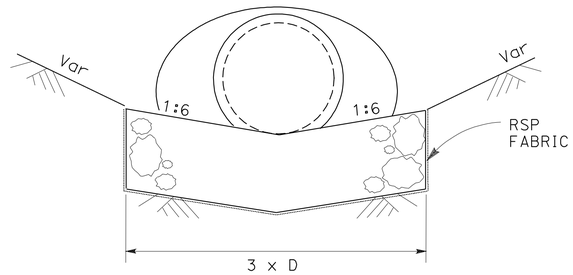

SECTION B-B

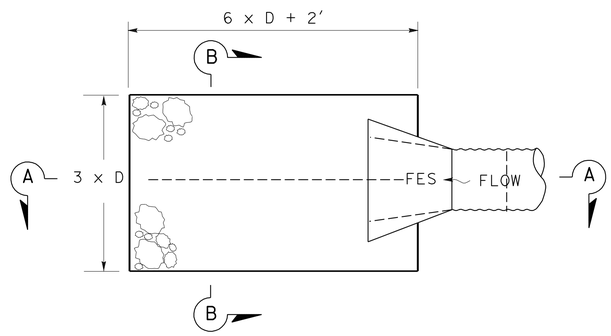

PLAN VIEW

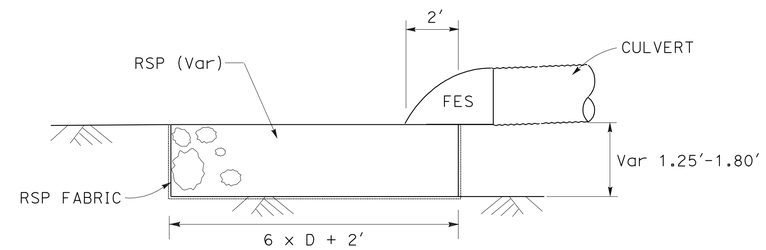

SECTION A-A

DRAINAGE SYSTEM No. 3 10 12 15 16 20 21 22

ROCK ENERGY DISSIPATOR (RSP) WITH OR WITHOUT FES DETAIL

DRAINAGE DETAILS

NO SCALE

DD-4

STATE OF CALIFORNIA - DEPARTMENT OF TRANSPORTATION
Caltrans
HYDRAULICS

FUNCTIONAL SUPERVISOR: MASTRI ALVANDI
CALCULATED-DESIGNED BY: CHARLES WOOTEN
CHECKED BY: RYAN KOHAGURA
REVISED BY
DATE REVISED

LAST REVISION 12-09-09
DATE PLOTTED => 12-APR-2010
TIME PLOTTED => 13:19

Dist	COUNTY	ROUTE	POST MILES TOTAL PROJECT	SHEET No.	TOTAL SHEETS
03	Pla	267	4.9/6.7	50	74

REGISTERED CIVIL ENGINEER DATE 12-10-09

4-12-10
PLANS APPROVAL DATE

REGISTERED PROFESSIONAL ENGINEER
JAMES M. PHILLIPP
No. 59614
Exp. 12-31-09
CIVIL
STATE OF CALIFORNIA

THE STATE OF CALIFORNIA OR ITS OFFICERS OR AGENTS SHALL NOT BE RESPONSIBLE FOR THE ACCURACY OR COMPLETENESS OF SCANNED COPIES OF THIS PLAN SHEET.

NOTE:
FOR METAL POST DETAILS NOT SHOWN SEE STD. PLAN A73B.

CULVERT MARKERS

DRAINAGE SYSTEM No.	LOCATION		POSTMILE	CULVERT MARKER EA
1	L†/R†	"A1" 256+75.93	4.92	2
2	R†	"A1" 257+81.65	4.94	1
3	R†	"A1" 267+85.50	5.07	1
4	L†/R†	"A1" 270+10.42	5.11	2
5	L†/R†	"A1" 274+65.42	5.20	2
6	L†/R†	"A1" 278+64.11	5.28	2
7	L†/R†	"A1" 282+65.23	5.36	2
8	R†	"A1" 286+37.84	5.42	1
9	L†/R†	"A1" 286+54.91	5.43	2
10	L†/R†	"A1" 289+34.47	5.49	2
11	L†/R†	"A1" 297+59.07	5.64	2
12	R†	"A1" 300+75.08	5.70	1
13	L†/R†	"A1" 302+58.69	5.74	2
14	L†/R†	"A1" 307+47.72	5.83	2
15	L†/R†	"A1" 312+30.42	5.96	2
16	L†	"A1" 318+02.75	6.01	1
18	R†	"A1" 322+37.70	6.09	1
19	R†	"A1" 325+91.40	6.16	1
20	R†	"A1" 329+50.00	6.23	1
21	L†	"A1" 334+00.00	6.32	1
22	R†	"A1" 334+31.50	6.33	1
TOTAL				32

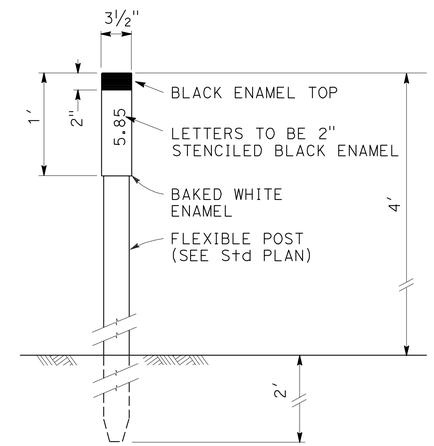

MARKER (CULVERT)

PLACE MARKER LOCATION TO BE DETERMINED BY ENGINEER IN THE FIELD

DRAINAGE DETAILS

NO SCALE

DD-5

STATE OF CALIFORNIA - DEPARTMENT OF TRANSPORTATION
Caltrans
HYDRAULICS

FUNCTIONAL SUPERVISOR: MASTRI ALVANDI
CALCULATED-DESIGNED BY: CHARLES WOOTEN
CHECKED BY: RYAN KOHAGURA
REVISED BY
DATE REVISED

LAST REVISION 12-09-09
DATE PLOTTED => 12-APR-2010
TIME PLOTTED => 13:19

Dist	COUNTY	ROUTE	POST MILES TOTAL PROJECT	SHEET No.	TOTAL SHEETS
03	Pla	267	4.9/6.7	51	74

REGISTERED CIVIL ENGINEER 12-10-09 DATE

4-12-10
PLANS APPROVAL DATE

REGISTERED PROFESSIONAL ENGINEER RYAN S. KOHAGURA No. C58535 Exp. 12-31-10 CIVIL STATE OF CALIFORNIA

THE STATE OF CALIFORNIA OR ITS OFFICERS OR AGENTS SHALL NOT BE RESPONSIBLE FOR THE ACCURACY OR COMPLETENESS OF SCANNED COPIES OF THIS PLAN SHEET.

APC ALLOWABLE PIPE LINER MATERIAL

DESCRIPTION	TYPE			
	*HDPE SOLID WALL	HDPE CLOSED PROFILE WALL	HDPE DEFORMED REFORM	CIPP
	MIN ID (IN)	MIN ID (IN)	SIZE (IN)	SIZE (IN)
EXIST 18"	16	NOT AVAILABLE	18	18
EXIST 24"	20	18	24	24

*HDPE=HIGH DENSITY POLYETHYLENE PIPE
MIN SDR 26 FOR HDPE SOLID WALL AND DEFORM REFORM PIPE

DRAINAGE ITEMS

DRAINAGE PLAN SHEET No.	DRAINAGE SYSTEM No.	DRAINAGE UNIT	REMOVING FACILITIES: ABANDON CULVERT	REMOVE ENTRANCE TAPER	REMOVE CULVERT	REMOVE INLET	REMOVE DOWNDRAIN	REMODEL INLET	DRAINAGE INLET: INLET TYPE (N)	HEIGHT OF INLET (N)	FRAME & GRATE TYPE (N)	MINOR CONCRETE (MINOR STRUCTURE)	MISCELLANEOUS IRON AND STEEL	FILTER FABRIC	PERMEABLE MATERIAL	CULVERT (MARKER)	18" ALTERNATIVE PIPELINER	24" ALTERNATIVE PIPELINER	12" CORRUGATED STEEL PIPE (0.109" THICK)	18" CORRUGATED STEEL PIPE (0.109" THICK)	36" CORRUGATED STEEL PIPE (0.109" THICK)	8" PERFORATED PLASTIC PIPE UNDERDRAIN	8" CORRUGATED STEEL PIPE DOWNDRAIN	12" STEEL FLARED END SECTION	18" STEEL FLARED END SECTION	8" ENTRANCE TAPER	8" ANCHOR ASSEMBLY	RSP: ROCK SLOPE PROTECTION (BACKING No.1, METHOD A)	ROCK SLOPE PROTECTION (BACKING No.2, METHOD A)	OSD: HOT MIX ASPHALT (TYPE A)	PLACE HOT MIX ASPHALT (MISCELLANEOUS AREA)	DESCRIPTION	STATION	DRAINAGE SYSTEM No.	DRAINAGE UNIT
			EA	EA	LF	EA	EA	EA	EA	LF	EA	CY	LB	SQYD	CY	EA	LF	LF	LF	LF	LF	LF	LF	EA	EA	EA	EA	CY	CY	TON	SQYD				
D-1	1	a						1	GT3		24-12X		478																			REMODEL INLET	"A" 256+75.93	1	a
		b							GT4	5	24-12X	2.92	478	12.71	1.10	2																GT4 INLET (MOD) W/ ST			b
		c							GT4	5	24-12X	2.94	478	12.71	1.10																	GT4 INLET (MOD) W/ ST			c
D-1	2	a		1																												REMOVE ENTRANCE TAPER	"A" 257+81.65	2	a
		b					1																									REMOVE DOWNDRAIN			b
		c																								1						8" ENTRANCE TAPER			c
		d														1							15.0				1					8" CSP DD			d
D-1	3	a								6	36RX	0.95	215	11.56	4.57	1					6.0											TRACTION SAND TRAP	"A" 267+85.50	3	a
		b																	1.0													12" x 1.0 ft CSP			b
		c								6	36RX	0.74	215	5.78	3.37						6.0											TRACTION SAND TRAP			c
		d																	8.0													12" x 8.0 ft CSP			d
		e																											1.1			ROCK SLOPE PROTECTION (BACKING No.2, METHOD A)			e
D-2	4	a						1	GT3		24-12X		478																			REMODEL INLET	"A" 270+10.42	4	a
		b																	1.5													12" x 1.5 ft CSP			b
		c							GT4	5	24-12X	2.94	478	12.71	1.10	2																GT4 INLET (MOD) W/ ST			c
		d															64.0															18" ALTERNATIVE PIPELINER			d
D-2	5	a						1	GT3		24-12X		478																			REMODEL INLET	"A" 274+65.42	5	a
		b																	1.5													12" x 1.5 ft CSP			b
		c							GT4	5	24-12X	2.92	478	12.71	1.10	2																GT4 INLET (MOD) W/ ST			c
		d							GT4	5	24-12X	2.94	478	12.71	1.10																	GT4 INLET (MOD) W/ ST			d
D-2	6	a						1	GT3		24-12X		478																			REMODEL INLET	"A" 278+64.11	6	a
		b							GT4	5	24-12X	2.94	478	12.71	1.10	2																GT4 INLET (MOD) W/ ST			b
D-3	7	a						1	GT3		24-12X		478																			REMODEL INLET	"A" 282+65.23	7	a
		b																	2.0													12" x 2.0 ft CSP			b
		c							GT4	5	24-12X	2.94	478	12.71	1.10	2																GT4 INLET (MOD) W/ ST			c
D-3	8	a																												0.6	8.0	PLACE HMA OSD	"A" 286+37.84	8	a
		b								6	36RX	0.95	215	11.56	4.57	1					6.0											TRACTION SAND TRAP			b
		c																	1.0													12" x 1.0 ft CSP			c
		d								6	36RX	0.74	215	5.78	3.37						6.0											TRACTION SAND TRAP			d
		e																	1.0													12" x 1.0 ft CSP			e
		f								6	36RX	0.74	215	5.78	3.37						6.0											TRACTION SAND TRAP			f
		g																	5.5													12" x 5.5 ft CSP			g
		h																						1								12" SFES			h
D-3	9	a						1	GT3		24-12X		478																			REMODEL INLET	"A" 286+54.91	9	a
		b																	2.0													12" x 2.0 ft CSP			b
		c							GT4	5	24-12X	2.94	478	12.71	1.10	2																GT4 INLET (MOD) W/ ST			c
		d																				22.0										8" PPP UD			d
SUBTOTAL			0	1	0.0	0	1	6				27.60	7767	142.14	28.05	15	64.0	0.0	23.5	0.0	30.0	22.0	15.0	1	0	1	1	0.0	1.1	0.6	8.0				

(N) NOT A SEPARATE PAY ITEM, FOR INFORMATION ONLY.

DRAINAGE QUANTITIES
DQ-1

REVISED BY | DATE REVISED
CHARLES WOOTEN | RYAN KOHAGURA
CALCULATED-DESIGNED BY | CHECKED BY
FUNCTIONAL SUPERVISOR | MASTRI ALVANDI

STATE OF CALIFORNIA - DEPARTMENT OF TRANSPORTATION
Caltrans PROJECT DEVELOPMENT

LAST REVISION 12-09-09 | DATE PLOTTED => 12-APR-2010 | TIME PLOTTED => 13:19

Dist	COUNTY	ROUTE	POST MILES TOTAL PROJECT	SHEET No.	TOTAL SHEETS
03	Pla	267	4.9/6.7	52	74

REGISTERED CIVIL ENGINEER 12-10-09 DATE

4-12-10
PLANS APPROVAL DATE

REGISTERED PROFESSIONAL ENGINEER RYAN S. KOHAGURA No. C58535 Exp. 12-31-10 CIVIL STATE OF CALIFORNIA

THE STATE OF CALIFORNIA OR ITS OFFICERS OR AGENTS SHALL NOT BE RESPONSIBLE FOR THE ACCURACY OR COMPLETENESS OF SCANNED COPIES OF THIS PLAN SHEET.

DRAINAGE ITEMS

DRAINAGE PLAN SHEET No.	DRAINAGE SYSTEM No.	DRAINAGE UNIT	REMOVING FACILITIES: ABANDON CULVERT (EA)	REMOVE ENTRANCE TAPER (EA)	REMOVE CULVERT (LF)	REMOVE INLET (EA)	REMOVE DOWNDRAIN (EA)	REMODEL INLET (EA)	DRAINAGE INLET: INLET TYPE (N) (EA)	HEIGHT OF INLET (N) (LF)	FRAME & GRATE TYPE (N) (EA)	MINOR CONCRETE (MINOR STRUCTURE) (CY)	MISCELLANEOUS IRON AND STEEL (LB)	FILTER FABRIC (SQYD)	PERMEABLE MATERIAL (CY)	CULVERT (MARKER) (EA)	18" ALTERNATIVE PIPELINER (LF)	24" ALTERNATIVE PIPELINER (LF)	12" CORRUGATED STEEL PIPE (0.109" THICK) (LF)	18" CORRUGATED STEEL PIPE (0.109" THICK) (LF)	36" CORRUGATED STEEL PIPE (0.109" THICK) (LF)	8" PERFORATED PLASTIC PIPE UNDERDRAIN (LF)	8" CORRUGATED STEEL PIPE DOWNDRAIN (LF)	12" STEEL FLARED END SECTION (EA)	18" STEEL FLARED END SECTION (EA)	8" ENTRANCE TAPER (EA)	8" ANCHOR ASSEMBLY (EA)	RSP: ROCK SLOPE PROTECTION (BACKING No.1, METHOD A) (CY)	ROCK SLOPE PROTECTION (BACKING No.2, METHOD A) (CY)	OSD: HOT MIX ASPHALT (TYPE A) (TON)	PLACE HOT MIX ASPHALT (MISCELLANEOUS AREA) (SQYD)	DESCRIPTION	STATION	DRAINAGE SYSTEM No.	DRAINAGE UNIT
D-3	9	e	1																														ABANDON CULVERT 8" x 31" PMP	"A" 286+54.91	9	e
		f				1																											REMOVE INLET			f
		g																		3.0													18" x 3.0 ft CSP			g
		h															62.0																18" ALTERNATIVE PIPELINER			h
D-3	10	a						1	GT3		24-12X		478																				REMODEL INLET	"A" 289+34.47	10	a
		b																	2.0														12" x 2.0 ft CSP			b
		c							GT4	5	24-12X	2.94	478	12.71	1.10	2																	GT4 INLET (MOD) W/ ST			c
		d															62.0																18" ALTERNATIVE PIPELINER			d
		e																							1								18" SFES			e
		f																										3.3					ROCK SLOPE PROTECTION (BACKING NO.1, METHOD A)			f
D-4	11	a						1	GT3		24-12X		478																				REMODEL INLET	"A" 297+59.07	11	a
		b							GT4	5	24-12X	2.94	478	12.71	1.10	2																	GT4 INLET (MOD) W/ ST			b
		c															59.0																18" ALTERNATIVE PIPELINER			c
D-4	12	a																												0.9	11.3		PLACE HMA OSD	"A" 300+75.08	12	a
		b								6	36RX	0.95	215	11.56	4.57	1					6.0												TRACTION SAND TRAP			b
		c																	1.0														12" x 1.0 ft CSP			c
		d								6	36RX	0.74	215	5.78	3.37						6.0												TRACTION SAND TRAP			d
		e																	1.0														12" x 1.0 ft CSP			e
		f								6	36RX	0.74	215	5.78	3.37						6.0												TRACTION SAND TRAP			f
		g																	1.0														12" x 1.0 ft CSP			g
		h								6	36RX	0.74	215	5.78	3.37						6.0												TRACTION SAND TRAP			h
		i																	1.0														12" x 1.0 ft CSP			i
		j								6	36RX	0.74	215	5.78	3.37						6.0												TRACTION SAND TRAP			j
		k																	6.5														12" x 5.0 ft CSP			k
		l																											1.1				ROCK SLOPE PROTECTION (BACKING NO.2, METHOD A)			l
D-4	13	a						1	GT3		24-12X		478																				REMODEL INLET	"A" 302+58.69	13	a
		b																	2.0														12" x 2.0 ft CSP			b
		c							GT4	5	24-12X	2.94	478	4.24	1.10	2																	GT4 INLET (MOD) W/ ST			c
D-4	14	a						1	GT3		24-12X		478																				REMODEL INLET	"A" 307+47.72	14	a
		b			14.0																												REMOVE CULVERT 8"X 14' PMP			b
		c							GT4	5	24-12X	2.92	478	4.24	1.10	2																	GT4 INLET (MOD) W/ ST			c
		d							GT4	5	24-12X	2.94	478	4.24	1.10																		GT4 INLET (MOD) W/ ST			d
		e															60.0																18" ALTERNATIVE PIPELINER			e
D-5	15	a																	4.0														12" x 4.0 ft CSP	"A" 312+30.42	15	a
		b							GT4	5	24-12X	2.94	478	4.24	1.10	2																	GT4 INLET (MOD) W/ ST			b
		c							GT4	5	24-12X	2.94	478	4.24	1.10																		GT4 INLET (MOD) W/ ST			c
		d																75.0															24" ALTERNATIVE PIPELINER			d
SUBTOTAL			1	0	14.0	1	0	4				24.47	6333	81.30	25.75	11	243.0	75.0	18.5	3.0	30.0	0.0	0.0	0	1	0	0	3.3	1.1	0.9	11.3					

(N) NOT A SEPARATE PAY ITEM, FOR INFORMATION ONLY.

DRAINAGE QUANTITIES
DQ-2

STATE OF CALIFORNIA - DEPARTMENT OF TRANSPORTATION
Caltrans PROJECT DEVELOPMENT

FUNCTIONAL SUPERVISOR: MASTRI ALVANDI
CALCULATED-DESIGNED BY: CHARLES WOOTEN
CHECKED BY: RYAN KOHAGURA
REVISED BY
DATE REVISED

LAST REVISION 12-09-09
DATE PLOTTED => 12-APR-2010
TIME PLOTTED => 13:00

Dist	COUNTY	ROUTE	POST MILES TOTAL PROJECT	SHEET No.	TOTAL SHEETS
03	Pla	267	4.9/6.7	53	74

Ryan S. Kohagura 12-10-09
REGISTERED CIVIL ENGINEER DATE

4-12-10
PLANS APPROVAL DATE

REGISTERED PROFESSIONAL ENGINEER RYAN S. KOHAGURA No. C58535 Exp. 12-31-10 CIVIL STATE OF CALIFORNIA

THE STATE OF CALIFORNIA OR ITS OFFICERS OR AGENTS SHALL NOT BE RESPONSIBLE FOR THE ACCURACY OR COMPLETENESS OF SCANNED COPIES OF THIS PLAN SHEET.

DRAINAGE ITEMS

DRAINAGE PLAN SHEET No.	DRAINAGE SYSTEM No.	DRAINAGE UNIT	REMOVING FACILITIES: ABANDON CULVERT	REMOVE ENTRANCE TAPER	REMOVE CULVERT	REMOVE INLET	REMOVE DOWNDRAIN	REMODEL INLET	DRAINAGE INLET: INLET TYPE (N)	HEIGHT OF INLET (N)	FRAME & GRATE TYPE (N)	MINOR CONCRETE (MINOR STRUCTURE)	MISCELLANEOUS IRON AND STEEL	FILTER FABRIC	PERMEABLE MATERIAL	CULVERT (MARKER)	18" ALTERNATIVE PIPELINER	24" ALTERNATIVE PIPELINER	12" CORRUGATED STEEL PIPE (0.109" THICK)	18" CORRUGATED STEEL PIPE (0.109" THICK)	36" CORRUGATED STEEL PIPE (0.109" THICK)	8" PERFORATED PLASTIC PIPE UNDERDRAIN	8" CORRUGATED STEEL PIPE DOWNDRAIN	12" STEEL FLARED END SECTION	18" STEEL FLARED END SECTION	8" ENTRANCE TAPER	8" ANCHOR ASSEMBLY	RSP: ROCK SLOPE PROTECTION (BACKING No.1, METHOD A)	ROCK SLOPE PROTECTION (BACKING No.2, METHOD A)	OSD: HOT MIX ASPHALT (TYPE A)	PLACE HOT MIX ASPHALT (MISCELLANEOUS AREA)	DESCRIPTION	STATION	DRAINAGE SYSTEM No.	DRAINAGE UNIT
			EA	EA	LF	EA	EA	EA	EA	LF	EA	CY	LB	SQYD	CY	EA	LF	LF	LF	LF	LF	LF	LF	EA	EA	EA	EA	CY	CY	TON	SQYD				
D-5	15	e																										2.7				ROCK SLOPE PROTECTION (BACKING NO.1, METHOD A)	"A" 312+30.42	15	e
D-5	16	a						1	GT3		24-12X		478																			REMODEL INLET	"A" 318+02.75	16	a
		b																	1.0													12" x 1.0 ft CSP			b
		c							GT4	5	24-12X	2.94	478	4.24	1.10	1																GT4 INLET (MOD) W/ ST			c
		d							GT4	5	24-12X	2.92	478	4.24	1.10																	GT4 INLET (MOD) W/ ST			d
		e							GT4	5	24-12X	2.92	478	4.24	1.10																	GT4 INLET (MOD) W/ ST			e
		f							GT4	5	24-12X	2.92	478	4.24	1.10																	GT4 INLET (MOD) W/ ST			f
		g															82.5															18" ALTERNATIVE PIPELINER			g
D-5	17	a	1																													ABANDON CULVERT (EXIST 18" x 48' CMP)	"A" 319+22.00	17	a
D-5	18	a								6	36RX	0.95	215	11.56	4.57	1					6.0											TRACTION SAND TRAP	"A" 322+37.70	18	a
		b																	3.5													12" x 3.5 ft CSP			b
D-6	19	a																												0.9	11.3	PLACE HMA OSD	"A" 325+91.40	19	a
		b								6	36RX	0.95	215	11.56	4.57	1					6.0											TRACTION SAND TRAP			b
		c																	1.0													12" x 1.0 ft CSP			c
		d								6	36RX	0.74	215	5.78	3.37						6.0											TRACTION SAND TRAP			d
		e																	1.0													12" x 1.0 ft CSP			e
		f								6	36RX	0.74	215	5.78	3.37						6.0											TRACTION SAND TRAP			f
		g																	1.0													12" x 1.0 ft CSP			g
		h								6	36RX	0.74	215	5.78	3.37						6.0											TRACTION SAND TRAP			h
		i																	1.0													12" x 1.0 ft CSP			i
		j								6	36RX	0.74	215	5.78	3.37						6.0											TRACTION SAND TRAP			j
		k																	14.5													12" x 14.5 ft CSP			k
D-6	20	a																												0.9	11.3	PLACE HMA OSD	"A" 329+50.00	20	a
		b								6	36RX	0.95	215	11.56	4.57	1					6.0											TRACTION SAND TRAP			b
		c																	1.0													12" x 1.0 ft CSP			c
		d								6	36RX	0.74	215	5.78	3.37						6.0											TRACTION SAND TRAP			d
		e																	1.0													12" x 1.0 ft CSP			e
		f								6	36RX	0.74	215	5.78	3.37						6.0											TRACTION SAND TRAP			f
		g																	1.0													12" x 1.0 ft CSP			g
		h								6	36RX	0.74	215	5.78	3.37						6.0											TRACTION SAND TRAP			h
		i																	1.0													12" x 1.0 ft CSP			i
		j								6	36RX	0.74	215	5.78	3.37						6.0											TRACTION SAND TRAP			j
		k																	17.8													12" x 17.8 ft CSP			k
		l																						1								12" SFES			l
		m																										18.0				ROCK SLOPE PROTECTION (BACKING NO.1, METHOD A)			m
D-6	21	a								6	36RX	0.95	215	11.56	4.57	1					6.0											TRACTION SAND TRAP	"A" 334+00.00	21	a
		b																	1.0													12" x 1.0 LF CSP			b
SUBTOTAL			1	0	0.0	0	0	1				21.42	4970	109.44	49.64	5	82.5	0.0	45.8	0.0	72.0	0.0	0.0	1	0	0	0	20.7	0.0	1.8	22.6				

(N) NOT A SEPARATE PAY ITEM, FOR INFORMATION ONLY.

DRAINAGE QUANTITIES
DQ-3

STATE OF CALIFORNIA - DEPARTMENT OF TRANSPORTATION
Caltrans PROJECT DEVELOPMENT

FUNCTIONAL SUPERVISOR: MASTRI ALVANDI
CALCULATED-DESIGNED BY: CHARLES WOOTEN
CHECKED BY: RYAN KOHAGURA
REVISED BY
DATE REVISED

LAST REVISION 12-09-09
DATE PLOTTED => 12-APR-2010
TIME PLOTTED => 13:00

Dist	COUNTY	ROUTE	POST MILES TOTAL PROJECT	SHEET No.	TOTAL SHEETS
03	Pla	267	4.9/6.7	54	74

REGISTERED CIVIL ENGINEER 12-10-09 DATE

4-12-10
PLANS APPROVAL DATE

REGISTERED PROFESSIONAL ENGINEER RYAN S. KOHAGURA No. C58535 Exp. 12-31-10 CIVIL STATE OF CALIFORNIA

THE STATE OF CALIFORNIA OR ITS OFFICERS OR AGENTS SHALL NOT BE RESPONSIBLE FOR THE ACCURACY OR COMPLETENESS OF SCANNED COPIES OF THIS PLAN SHEET.

DRAINAGE ITEMS

DRAINAGE PLAN SHEET No.	DRAINAGE SYSTEM No. ⬡	DRAINAGE UNIT ○	REMOVING FACILITIES: ABANDON CULVERT (EA)	REMOVE ENTRANCE TAPER (EA)	REMOVE CULVERT (LF)	REMOVE INLET (EA)	REMOVE DOWNDRAIN (EA)	REMODEL INLET (EA)	DRAINAGE INLET: INLET TYPE (N) (EA)	HEIGHT OF INLET (N) (LF)	FRAME & GRATE TYPE (N) (EA)	MINOR CONCRETE (MINOR STRUCTURE) (CY)	MISCELLANEOUS IRON AND STEEL (LB)	FILTER FABRIC (SQYD)	PERMEABLE MATERIAL (CY)	CULVERT (MARKER) (EA)	18" ALTERNATIVE PIPELINER (LF)	24" ALTERNATIVE PIPELINER (LF)	12" CORRUGATED STEEL PIPE (0.109" THICK) (LF)	18" CORRUGATED STEEL PIPE (0.109" THICK) (LF)	36" CORRUGATED STEEL PIPE (0.109" THICK) (LF)	8" PERFORATED PLASTIC PIPE UNDERDRAIN (LF)	8" CORRUGATED STEEL PIPE DOWNDRAIN (LF)	12" STEEL FLARED END SECTION (EA)	18" STEEL FLARED END SECTION (EA)	8" ENTRANCE TAPER (EA)	8" ANCHOR ASSEMBLY (EA)	RSP: ROCK SLOPE PROTECTION (BACKING No.1, METHOD A) (CY)	ROCK SLOPE PROTECTION (BACKING No.2, METHOD A) (CY)	OSD: HOT MIX ASPHALT (TYPE A) (TON)	PLACE HOT MIX ASPHALT (MISCELLANEOUS AREA) (SQYD)	DESCRIPTION	STATION	DRAINAGE SYSTEM No. ⬡	DRAINAGE UNIT ○
D-6	21	c								6	36RX	0.74	215	5.78	3.37						6.0											TRACTION SAND TRAP	"A" 334+00.00	21	c
		d																	1.0													12" x 1.0 LF CSP			d
		e								6	36RX	0.74	215	5.78	3.37						6.0											TRACTION SAND TRAP			e
		f																	1.0													12" x 1.0 LF CSP			f
		g								6	36RX	0.74	215	5.78	3.37						6.0											TRACTION SAND TRAP			g
		h																	20.0													12" x 20.0 LF CSP			h
		i																						1								12" SFES			i
		j																										1.1				ROCK SLOPE PROTECTION (BACKING NO.1, METHOD A)			j
D-6	22	a								6	36RX	0.95	215	11.56	4.57	1					6.0											TRACTION SAND TRAP	"A" 334+31.50	22	a
		b																	1.0													12" x 1.0 LF CSP			b
		c								6	36RX	0.74	215	5.78	3.37						6.0											TRACTION SAND TRAP			c
		d																	1.0													12" x 1.0 LF CSP			d
		e								6	36RX	0.74	215	5.78	3.37						6.0											TRACTION SAND TRAP			e
		f																	1.0													12" x 1.0 LF CSP			f
		g								6	36RX	0.74	215	5.78	3.37						6.0											TRACTION SAND TRAP			g
		h																	1.0													12" x 1.0 LF CSP			h
		i								6	36RX	0.74	215	5.78	3.37						6.0											TRACTION SAND TRAP			i
		j																	1.0													12" x 1.0 LF CSP			j
		k								6	36RX	0.74	215	5.78	3.37						6.0											TRACTION SAND TRAP			k
		l																	1.0													12" x 1.0 LF CSP			l
		m								6	36RX	0.74	215	5.78	3.37						6.0											TRACTION SAND TRAP			m
		n																	1.0													12" x 1.0 LF CSP			n
		o								6	36RX	0.74	215	5.78	3.37						6.0											TRACTION SAND TRAP			o
		p																	1.0													12" x 1.0 LF CSP			p
		q								6	36RX	0.74	215	5.78	3.37						6.0											TRACTION SAND TRAP			q
		r																	1.0													12" x 1.0 LF CSP			r
		s								6	36RX	0.74	215	5.78	3.37						6.0											TRACTION SAND TRAP			s
		t																	39.3													12" x 39.3 LF CSP			t
		u																										1.1				ROCK SLOPE PROTECTION (BACKING NO.1, METHOD A)			u
SUBTOTAL			0	0	0	0	0	0				9.8	2795	80.92	45.01	1	0.0	0.0	70.3	0.0	78.0	0.0	0.0	1	0	0	0	2.2	0.0	0.0	0.0				
SHEET 1 TOTAL			0	1	0.0	0	1	6				27.6	7767	142.14	28.05	15	64.0	0.0	23.5	0.0	30.0	22.0	15.0	1	0	1	1	0.0	1.1	0.6	8.0				
SHEET 2 TOTAL			1	0	14.0	1	0	4				24.5	6333	81.30	25.75	11	243.0	75.0	18.5	3.0	30.0	0.0	0.0	0	1	0	0	3.3	1.1	0.9	11.3				
SHEET 3 TOTAL			1	0	0.0	0	0	1				21.4	4970	109.44	49.64	5	82.5	0.0	45.8	0.0	72.0	0.0	0.0	1	0	0	0	20.7	0.0	1.8	22.6				
TOTAL			2	1	14.0	1	1	11				83.3	21865	413.80	148.45	32	389.5	75.0	158.1	3.0	210.0	22.0	15.0	3	1	1	1	26.2	2.2	3.3	41.9				

(N) NOT A SEPARATE PAY ITEM, FOR INFORMATION ONLY.

DRAINAGE QUANTITIES
DQ-4

STATE OF CALIFORNIA - DEPARTMENT OF TRANSPORTATION
Caltrans PROJECT DEVELOPMENT

FUNCTIONAL SUPERVISOR: MASTRI ALVANDI
CALCULATED-DESIGNED BY: CHARLES WOOTEN
CHECKED BY: RYAN KOHAGURA
REVISED BY / DATE REVISED

LAST REVISION 3-18-10
DATE PLOTTED => 12-APR-2010
TIME PLOTTED => 13:00

Dist	COUNTY	ROUTE	POST MILES TOTAL PROJECT	SHEET No.	TOTAL SHEETS
03	Pla	267	4.9/6.7	55	74

David Liu 12-10-09
REGISTERED CIVIL ENGINEER DATE

4-12-10
PLANS APPROVAL DATE

REGISTERED PROFESSIONAL ENGINEER
DAVID LIU
No. 60884
Exp. 12-31-10
CIVIL
STATE OF CALIFORNIA

THE STATE OF CALIFORNIA OR ITS OFFICERS OR AGENTS SHALL NOT BE RESPONSIBLE FOR THE ACCURACY OR COMPLETENESS OF ELECTRONIC COPIES OF THIS PLAN SHEET.

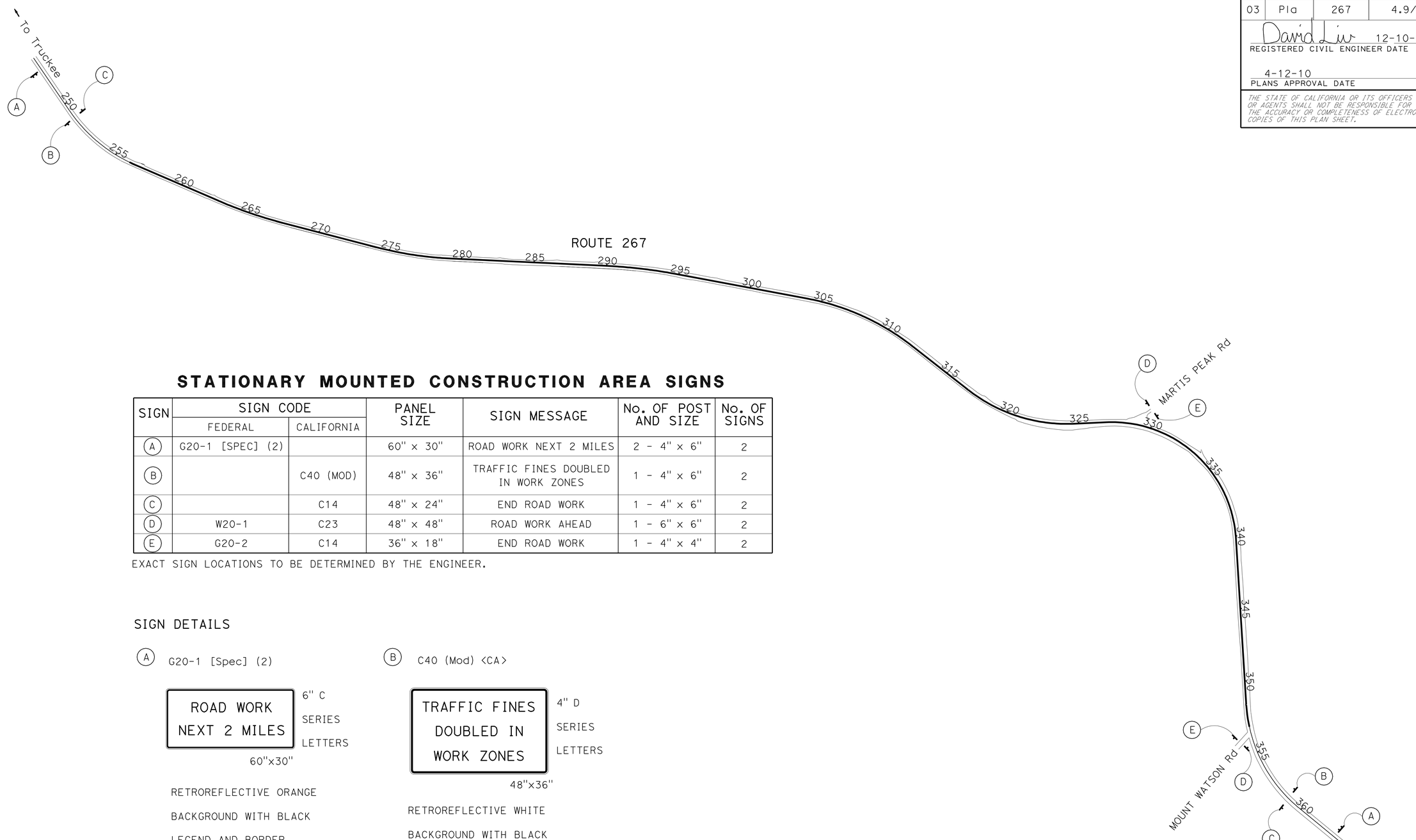

STATIONARY MOUNTED CONSTRUCTION AREA SIGNS

SIGN	SIGN CODE FEDERAL	SIGN CODE CALIFORNIA	PANEL SIZE	SIGN MESSAGE	No. OF POST AND SIZE	No. OF SIGNS
A	G20-1 [SPEC] (2)		60" x 30"	ROAD WORK NEXT 2 MILES	2 - 4" x 6"	2
B		C40 (MOD)	48" x 36"	TRAFFIC FINES DOUBLED IN WORK ZONES	1 - 4" x 6"	2
C		C14	48" x 24"	END ROAD WORK	1 - 4" x 6"	2
D	W20-1	C23	48" x 48"	ROAD WORK AHEAD	1 - 6" x 6"	2
E	G20-2	C14	36" x 18"	END ROAD WORK	1 - 4" x 4"	2

EXACT SIGN LOCATIONS TO BE DETERMINED BY THE ENGINEER.

SIGN DETAILS

A G20-1 [Spec] (2)

ROAD WORK
NEXT 2 MILES

6" C SERIES LETTERS

60"x30"

RETROREFLECTIVE ORANGE BACKGROUND WITH BLACK LEGEND AND BORDER.

B C40 (Mod) <CA>

TRAFFIC FINES
DOUBLED IN
WORK ZONES

4" D SERIES LETTERS

48"x36"

RETROREFLECTIVE WHITE BACKGROUND WITH BLACK LEGEND AND BORDER.

THIS PLAN ACCURATE FOR CONSTRUCTION AREA SIGN WORK ONLY.

CONSTRUCTION AREA SIGNS

NO SCALE

CS-1

STATE OF CALIFORNIA - DEPARTMENT OF TRANSPORTATION
Caltrans TRAFFIC DESIGN BRANCH, SACRAMENTO

FUNCTIONAL SUPERVISOR: ERIC Y. WONG

CALCULATED-DESIGNED BY: DAVID LIU
CHECKED BY: DAVID LIU

REVISED BY | DATE REVISED

LAST REVISION 12-09-09 | DATE PLOTTED => 12-APR-2010 | TIME PLOTTED => 13:00

Dist	COUNTY	ROUTE	POST MILES TOTAL PROJECT	SHEET No.	TOTAL SHEETS
03	Pla	267	4.9/6.7	56	74

REGISTERED CIVIL ENGINEER 12-10-09 DATE

4-12-10
PLANS APPROVAL DATE

REGISTERED PROFESSIONAL ENGINEER RYAN S. KOHAGURA No. C58535 Exp. 12-31-10 CIVIL STATE OF CALIFORNIA

THE STATE OF CALIFORNIA OR ITS OFFICERS OR AGENTS SHALL NOT BE RESPONSIBLE FOR THE ACCURACY OR COMPLETENESS OF SCANNED COPIES OF THIS PLAN SHEET.

NOTE: (N) NOT A SEPARATE PAY ITEM, FOR INFORMATION ONLY.

ROCK SLOPE PROTECTION

LOCATION		RSP FABRIC	½TON	1 TON
		SQYD	CY	TON
"A1" 266+17.37 TO 268+00.00	L†	365	240	60
"A1" 274+98.13 TO 279+18.44	L†	1,120	750	140
"A1" 281+88.03 TO 286+50.00	L†	885	590	155
"A1" 287+00.00 TO 287+50.00	L†	75	50	15
"A1" 296+50.00 TO 303+50.00	L†	780	510	235
"A1" 305+50.00 TO 307+18.44	L†	200	130	60
"A1" 317+93.02 TO 327+55.63	L†	2,940	1,960	320
"A1" 334+18.44 TO 352+50.00	L†	2,970	1,960	615
"A1" 335+00.00 TO 354+50.00	R†	1,665	1,110	650
	TOTAL	11,000	7,300	2,250

ROADWAY QUANTITIES

LOCATION		ROADWAY EXCAVATION	(N) EMBANKMENT	HOT MIX ASPHALT (TYPE A)	REPLACE ASPHALT CONCRETE SURFACING	PLACE HMA (MISCELLANEOUS AREA)
		CY	CY	TON	CY	SQYD
"A1" 256+00.00 TO 307+33.86	L†	2,272.5	242.5		402	
"A1" 257+84.68 TO 261+97.90	R†	19.2			22	
"A1" 267+95.03 TO 273+52.86	R†	28.3			27	
"A1" 279+28.41 TO 281+45.26	R†	7.4			8	
"A1" 284+16.07 TO 294+15.24	R†	50.7			56	
"A1" 296+47.78 TO 314+50.00	R†	77.8			79	
"A1" 307+86.00 TO 311+37.66	L†	24.8	187.5		28	
"A1" 312+64.50 TO 327+55.63	L†	1,339.7	42.7		109	
"A1" 334+18.44 TO 354+50.00	L†	4,020.8	25.4		132	
"A1" 334+50.00 TO 354+50.00	R†	2,010.6	31.1		173	
"A1" FROM DRAINAGE	L†/R†			4.6		41.9
TOTAL		9,851.8	529.2	4.6	1036	41.9

PLACE HOT MIX ASPHALT DIKE

LOCATION		(TYPE A)	(TYPE C)	(TYPE E)	HOT MIX ASPHALT (TYPE A)	IMPORTED MATERIAL (SHOULDER BACKING)
		LF	LF	LF	TON	TON
"A1" 256+00.00 TO 257+00.00	L†			100.0	2.54	
"A1" 257+09.41 TO 262+19.17	L†			509.8	12.97	46.92
"A1" 257+84.68 TO 261+97.90	R†		413.4		3.08	0.18
"A1" 262+26.50 TO 270+25.00	L†			798.4	20.32	
"A1" 267+95.03 TO 273+52.86	R†		559.2		4.16	1.12
"A1" 270+50.00 TO 307+33.86	L†			3699.8	94.15	51.29
"A1" 279+28.41 TO 281+45.26	R†		218.3		1.62	1.35
"A1" 284+16.07 TO 286+34.84	R†		220.2		1.64	3.50
"A1" 286+47.84 TO 290+73.51	R†		426.7		3.17	2.41
"A1" 290+86.51 TO 294+15.24	R†		327.0		2.43	3.29
"A1" 296+47.78 TO 300+97.00	R†		449.2		3.34	31.30
"A1" 301+10.00 TO 307+33.86	R†		620.3		4.61	
"A1" 307+46.86 TO 309+93.50	R†		245.6		1.83	
"A1" 307+86.00 TO 311+37.66	L†			356.8	9.08	
"A1" 310+06.50 TO 314+50.00	R†		442.9		3.29	
"A1" 312+64.50 TO 317+50.00	L†			484.3	12.32	83.51
"A1" 317+93.02 TO 327+55.63	L†			951.3	24.21	
"A1" 334+18.44 TO 354+50.00	L†	2,042.4			53.97	
"A1" 334+50.00 TO 354+50.00	R†	1,994.8			52.72	
TOTAL		4,037.2	3,922.8	6,900.4	311.47	224.87

TEMPORARY BMPs

LOCATION		TEMPORARY DRAINAGE INLET PROTECTION	TEMPORARY GRAVEL BAG BERM
STATION	SIDE	EA	LF
TO BE DETERMINED BY THE ENGINEER			16,665
256+75.93	L†	3	
270+10.42	L†	2	
274+65.42	L†	3	
278+64.11	L†	2	
282+65.23	L†	2	
286+54.91	L†	2	
289+34.47	L†	2	
297+59.07	L†	2	
302+58.58	L†	2	
307+47.72	L†	3	
312+34.14	L†	2	
318+02.75	L†	5	
334+00.00	L†	4	
267+85.00	R†	2	
300+75.08	R†	5	
322+37.70	R†	1	
325+91.40	R†	5	
329+50.00	R†	5	
334+00.00	R†	4	
334+31.50	R†	10	
TOTAL		66	16,665

ROCK STAIN QUANTITIES

LOCATION		ROCK STAIN
		SQFT
"A1" 266+17.00 TO 268+50.00	L†	5,309
"A1" 275+00.00 TO 279+18.00	L†	14,449
"A1" 281+88.00 TO 286+50.00	L†	11,575
"A1" 287+00.00 TO 287+50.00	L†	1,721
"A1" 296+50.00 TO 303+50.00	L†	10,020
"A1" 305+50.00 TO 307+18.00	L†	2,939
"A1" 317+93.00 TO 322+63.00	L†	17,615
"A1" 323+13.00 TO 327+55.00	L†	18,117
"A1" 344+19.00 TO 337+51.00	L†	7,064
"A1" 335+00.00 TO 337+51.00	R†	2,133
"A1" 337+51.00 TO 352+47.00	L†	28,193
"A1" 337+51.00 TO 352+47.00	R†	14,907
"A1" 352+48.00 TO 352+50.00	L†	168
"A1" 352+48.00 TO 354+50.00	R†	4,207
TOTAL		138,417

FENCE

LOCATION		Temp FENCE (TYPE ESA)
		LF
"A1" 287+50.00 TO 288+90.00	L†	172.6
"A1" 307+40.00 TO 308+25.00	L†	138.9
TOTAL		311.5

TEMPORARY BMPs

LOCATION		Temp SILT FENCE	Temp FIBER ROLL
		LF	LF
"A1" 266+17.37 TO 268+00.00	L†	390.7	515.26
"A1" 274+98.13 TO 279+18.44	L†	862.2	1,209.06
"A1" 281+88.03 TO 286+50.00	L†	946.7	1,273.94
"A1" 287+00.00 TO 287+50.00	L†	126.7	100.00
"A1" 289+00.00 TO 289+50.00	L†	125.7	100.00
"A1" 293+00.00 TO 294+15.24	L†	258.5	230.48
"A1" 296+50.00 TO 303+50.00	L†	1,861.7	1,550.00
"A1" 305+50.00 TO 307+18.44	L†	420.9	336.88
"A1" 307+86.00 TO 311+37.66	L†	744.7	853.32
"A1" 317+93.02 TO 327+55.63	L†	1,917.0	2,875.22
"A1" 334+18.44 TO 352+50.00	L†	7,397.9	6,863.12
"A1" 335+00.00 TO 354+50.00	R†	7,724.4	4,950.00
TOTAL		22,777.1	20,857.28

REMOVE ASPHALT CONCRETE DIKE

LOCATION		
		LF
"A1" 256+00.00 TO 257+00.00	L†	100.00
"A1" 257+09.41 TO 262+19.17	L†	509.76
"A1" 257+84.63 TO 261+97.90	R†	413.27
"A1" 262+26.50 TO 270+25.00	L†	798.50
"A1" 267+95.03 TO 273+52.86	R†	557.83
"A1" 270+50.00 TO 307+33.86	L†	3,683.86
"A1" 279+28.41 TO 281+45.26	R†	216.85
"A1" 284+16.07 TO 294+15.24	R†	999.17
"A1" 296+47.78 TO 314+50.00	R†	1,802.22
"A1" 312+64.50 TO 317+50.00	L†	485.50
"A1" 317+93.02 TO 327+55.63	L†	962.61
"A1" 334+18.44 TO 354+50.00	L†	2,031.56
"A1" 334+50.00 TO 354+50.00	R†	2,000.00
TOTAL		14,561.13

SUMMARY OF QUANTITIES

Q-1

REVISED BY | DATE REVISED
CHARLES WOOTEN | RYAN KOHAGURA
CALCULATED-DESIGNED BY | CHECKED BY
FUNCTIONAL SUPERVISOR
MASTRI ALVANDI

STATE OF CALIFORNIA - DEPARTMENT OF TRANSPORTATION
Caltrans PROJECT DEVELOPMENT

LAST REVISION 3-18-10
DATE PLOTTED => 12-APR-2010
TIME PLOTTED => 13:00

DIST	COUNTY	ROUTE	POST MILES TOTAL PROJECT	SHEET NO.	TOTAL SHEETS
03	Pla	267	4.9/6.7	57	74

REGISTERED CIVIL ENGINEER

June 15, 2007
PLANS APPROVAL DATE

REGISTERED PROFESSIONAL ENGINEER Glenn DeCou No. C34547 Exp. 9-30-07 CIVIL STATE OF CALIFORNIA

The State of California or its officers or agents shall not be responsible for the accuracy or completeness of electronic copies of this plan sheet.

To accompany plans dated 4-12-10

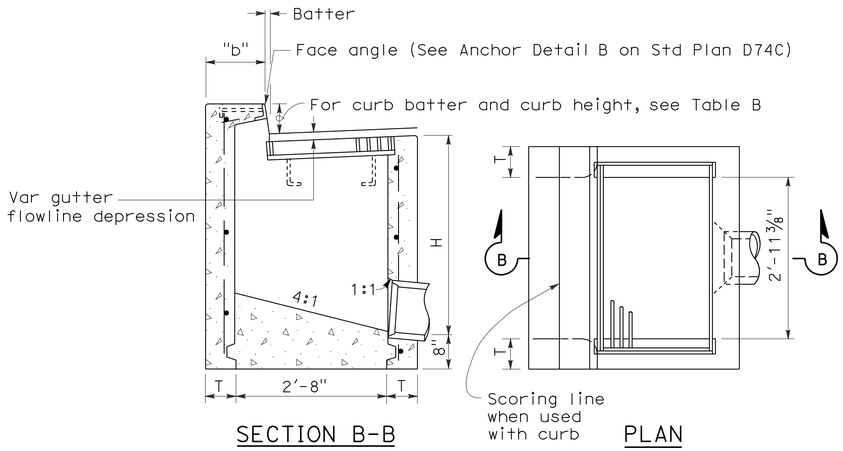

TYPE GO

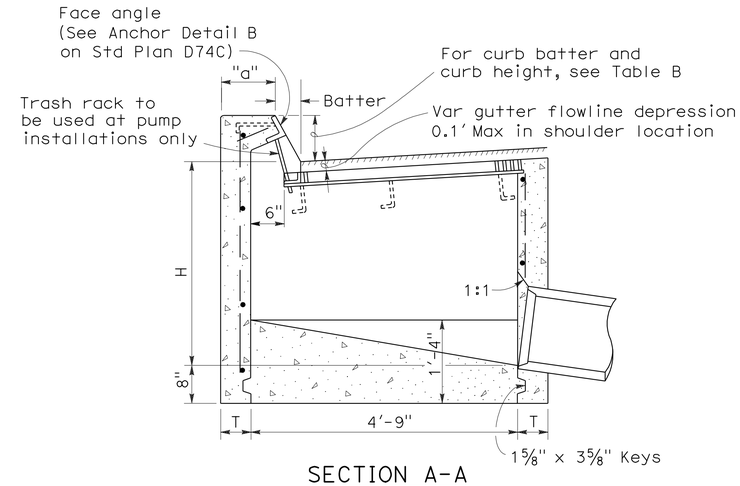

SECTION A-A

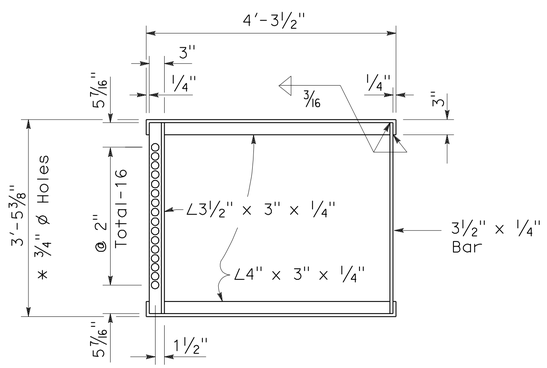

GRATE FRAME FOR TYPE GDO INLET

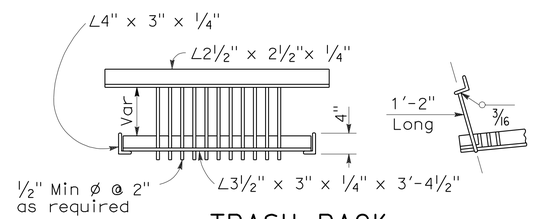

TRASH RACK

(For use with pump installation)

TABLE A

CONCRETE QUANTITIES				
	H=3'-0" TO 8'-0" (T=6")		H=8'-1" TO 20'-0" (T=8")	
TYPE	H=3'-0" (CY)	ADDITIONAL PCC PER FOOT (CY)	H=8'-1" (CY)	ADDITIONAL PCC PER FOOT (CY)
GO	1.24	0.245	3.39	0.346
GDO	1.62	0.322	4.36	0.446

Table based on 8" floor slab, no deduction for pipe openings, and curb type giving highest quantity of concrete. No deductions or adjustments are to be made to these quantities because of pipe openings, different floor alternatives or different curb type.

TABLE B

CURB TYPE	NORMAL CURB HEIGHT	CURB BATTER	"a" DIMENSION	"b" DIMENSION
A1-6	6"	1 1/2"	T+7 1/2"	T+6 1/2"
A1-8	8"	2"	T+7"	T+6"
B1-6	6"	4"	T+5"	T+4"
Type A Dike	6"	3"	T+6"	T+5"

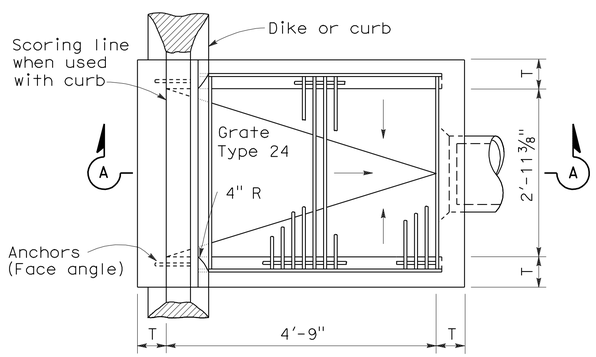

PLAN

TYPE GDO

NOTES:

1. "H" is the difference in elevation between the outlet pipe flow line and the normal gutter grade line undepressed.
2. For "T" wall thickness, see Table A below.
3. Wall reinforcing not required when "H" is 8'-0" or less and the unsupported width or length is 7'-0" or less. Walls exceeding these limits shall be reinforced with #4 @ 18"± centers placed 1 1/2" clear to inside of box unless otherwise shown.
4. Inlet bottom reinforcing not required. See Standard Plan D74C for alternative reinforced bottom.
5. Steps - None required where "H" is less than 2'-6" Where "H" is 2'-6" or more, install steps with lowest rung 1'-0" above the floor and highest rung not more than 6" below top of inlet. The distance between steps shall not exceed 1'-0" and shall be uniform throughout the length of the wall. Place steps in the wall without an opening. Step inserts may be substituted for the bar steps. Step Inserts shall comply with State Industrial Safety requirements. See Standard Plan D74C for step details.
6. When shown on the project plans, place a 3/4" plain round protection bar horizontally across the length of the opening and bend back 4" into the inlet wall on each side.
7. Pipe(s) can be placed in any wall.
8. Curb section shall match adjacent curb.
9. Basin floors shall have wood trowel finish and shall slope toward the outlet pipe as shown.
10. Galvanizing - See Standard Specifications or Special Provisions.
11. See Standard Plan D77A and D77B for grate and frame details and weights of miscellaneous iron and Steel.
12. See Standard Plan D78A for gutter depression details.
13. Full penetration butt welds may be substituted for the fillet welds on all anchors.
14. Standard square, hexagon, round or equivalent headed anchors may be substituted for the right angle hooks on the anchors shown on this plan.
15. Cast-in-place or precast alternative is optional with contractor. See Standard Specifications.
16. Cast-in-place inlets to be formed around all pipes/stubs intersecing the inlet and concrete poured in one continuous operation. Precast inlets shall have mortared pipe connections conforming to details for Type GCP inlets on Standard Plan D75B. See Standard Specifications for mortar composition.

STATE OF CALIFORNIA
DEPARTMENT OF TRANSPORTATION

DRAINAGE INLETS

NO SCALE

RSP D74B DATED JUNE 15, 2007 SUPERSEDES STANDARD PLAN D74B DATED MAY 1, 2006 - PAGE 150 OF THE STANDARD PLANS BOOK DATED MAY 2006.

REVISED STANDARD PLAN RSP D74B

2006 REVISED STANDARD PLAN RSP D74B

4-16-07

DIST	COUNTY	ROUTE	POST MILES TOTAL PROJECT	SHEET NO.	TOTAL SHEETS
03	Pla	267	4.9/6.7	58	74

REGISTERED CIVIL ENGINEER

June 6, 2008
PLANS APPROVAL DATE

REGISTERED PROFESSIONAL ENGINEER
Raymond Don Tsztoo
No. C37332
Exp. 6-30-08
CIVIL
STATE OF CALIFORNIA

The State of California or its officers or agents shall not be responsible for the accuracy or completeness of electronic copies of this plan sheet.

To accompany plans dated 4-12-10

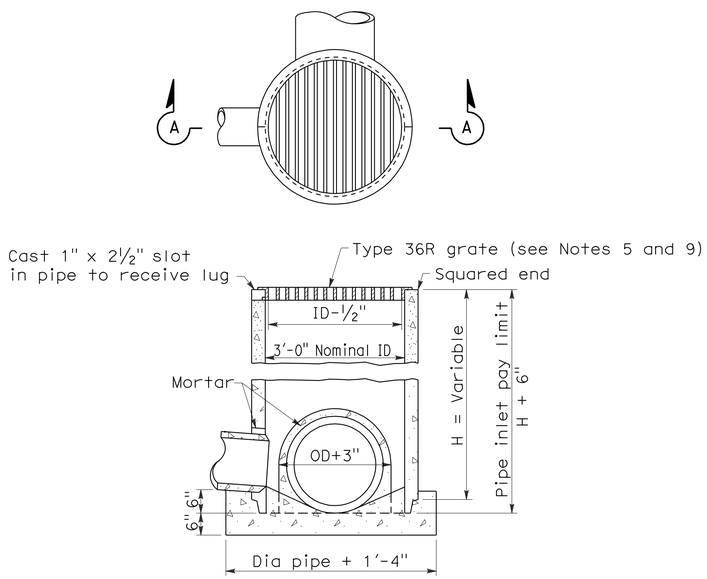

SECTION A-A

TYPE GCP

CONCRETE PIPE INLET WITH GRATE

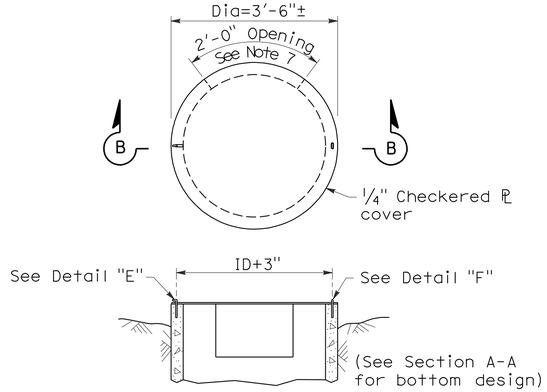

SECTION B-B

TYPE OCP or OCPI

CONCRETE PIPE INLET WITH STEEL COVER
(See Note 6)

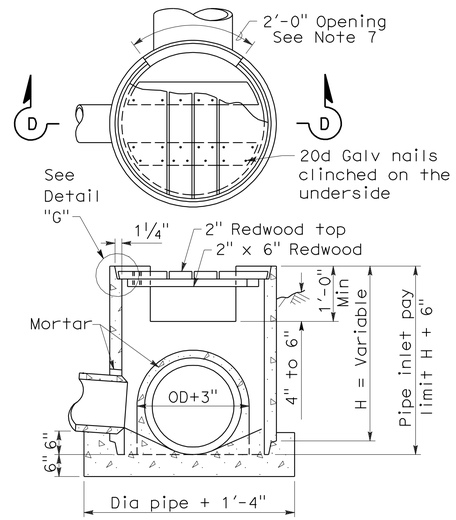

SECTION D-D

TYPE OCP or OCPI

CONCRETE PIPE INLET WITH REDWOOD COVER
(See Notes 6 and 10)

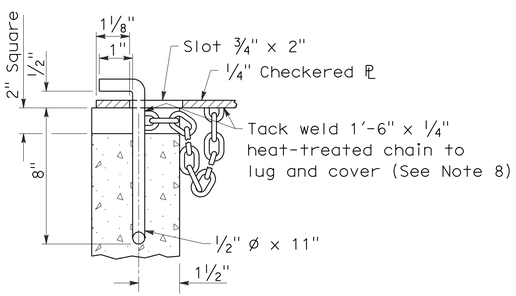

DETAIL "E"

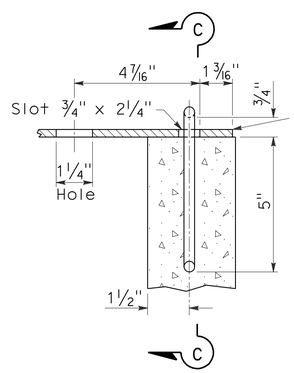

DETAIL "F"

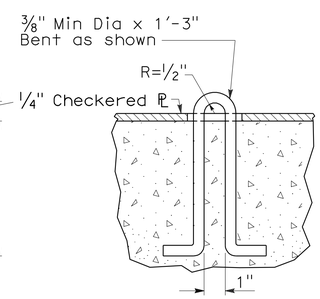

SECTION C-C

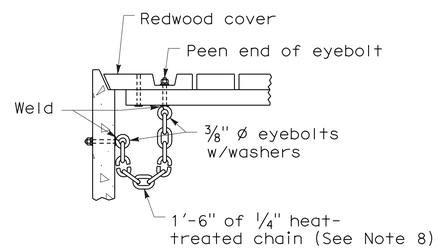

DETAIL "G"

NOTES:

1. For details of steel pipe inlets, see Standard Plan D75A.
2. For details of ladder and steps and when ladder or steps are required, see Standard Plan D75C.
3. Inlet pipes shall not protrude into basin.
4. Except for inlets used for junction boxes, basin floors shall have minimum slope of 4:1 from all directions toward outlet pipe, and a wood trowel finish.
5. See Revised Standard Plan RSP D77A and Standard Plan D77B for Grate and Frame Details and Weights of Miscellaneous Iron and Steel.
6. Designation of Type OCPI pipe inlets on plans indicates trash racks are to be furnished and installed on all side openings. See Standard Plan D75C for Trash Rack details.
7. More than one side opening may be required. Location and number as ordered by the Engineer. Opening may be cast in pipe.
8. Chain to be provided when specified.
9. Place pipe so bars of grate will be parallel with main surface flow.
10. Redwood covers shall only be placed at locations designated on the plans.

STATE OF CALIFORNIA
DEPARTMENT OF TRANSPORTATION

CONCRETE PIPE INLETS

NO SCALE

RSP D75B DATED JUNE 6, 2008 SUPERSEDES STANDARD PLAN D75B
DATED MAY 1, 2006 - PAGE 153 OF THE STANDARD PLANS BOOK DATED MAY 2006.

REVISED STANDARD PLAN RSP D75B

2006 REVISED STANDARD PLAN RSP D75B

5-20-08

DIST	COUNTY	ROUTE	POST MILES TOTAL PROJECT	SHEET NO.	TOTAL SHEETS
03	Pla	267	4.9/6.7	59	74

Raymond Don Tsztoo
REGISTERED CIVIL ENGINEER

January 18, 2008
PLANS APPROVAL DATE

REGISTERED PROFESSIONAL ENGINEER
Raymond Don Tsztoo
No. C37332
Exp. 6-30-08
CIVIL
STATE OF CALIFORNIA

The State of California or its officers or agents shall not be responsible for the accuracy or completeness of electronic copies of this plan sheet.

To accompany plans dated 4-12-10

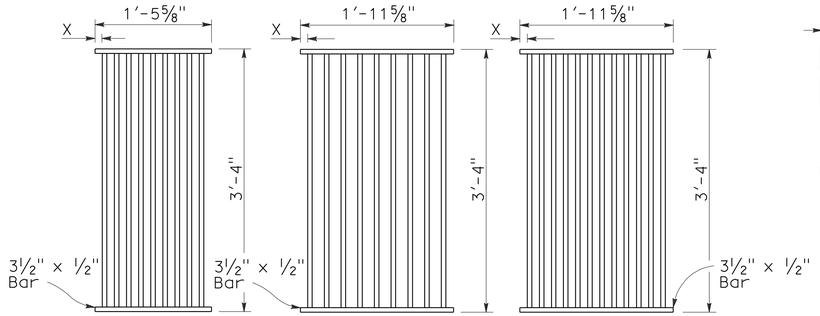

TYPE 18-9

1⅜" Clear spacing. Use within the roadbed on highways where bicycles and pedestrians are excluded.

TYPE 24-9

2" Clear spacing. Use in locations off the roadbed on all types of highways.

TYPE 24-12

1⅜" Clear spacing. Use within the roadbed on highways where bicycles and pedestrians are excluded.

RECTANGULAR GRATE DETAILS

(See table below)

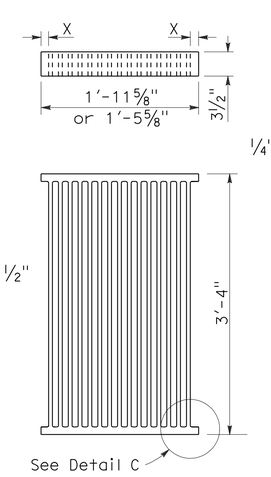

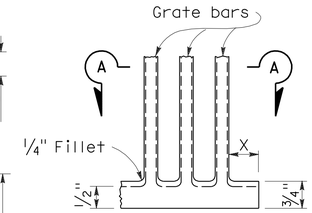

DETAIL C

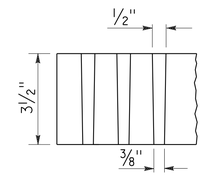

SECTION A-A

ALTERNATIVE CAST NODULAR IRON GRATE OR CAST STEEL GRATE

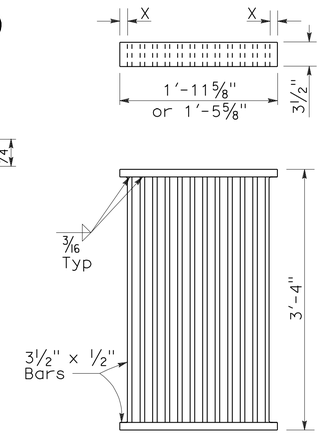

ALTERNATIVE WELDED GRATE

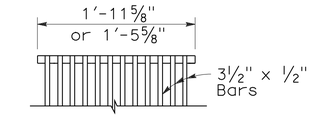

CAST END BLOCK

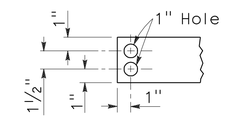

END OF BAR

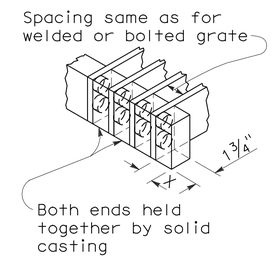

ALTERNATIVE CAST NODULAR IRON OR CAST STEEL END BLOCK GRATE

NOTES:

1. Grate type numbers refer to approximate width of grate in inches and number of bars, respectively.
2. Contractor has the option of using cast nodular iron, cast steel, welded, bolted, or cast end block grate.
3. See Special Provisions for requirements pertaining to galvanizing or asphalt dipping of grates and frames.
4. Rounded top of bars optional on all grates.
5. Pipe inlets with a grate shall be placed so that bars parallel direction of principle surface flow.
6. Full penetration butt welds may be substituted for the fillet welds on all anchors.
7. Standard square, hexagon, round or equivalent headed anchors may be substituted for the right angle hooks on the anchors shown on this plan.
8. Grate and frame weights are based on welded grates (weights of face angles, steps, protection bars, etc. are not included).

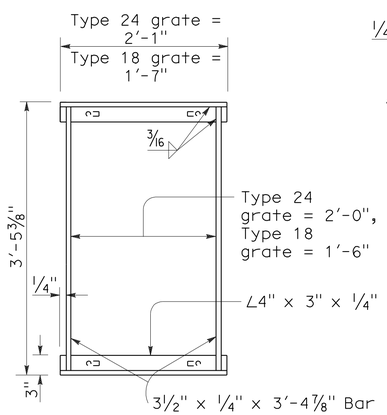

TYPICAL FRAME

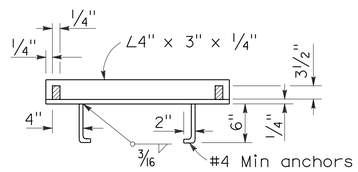

CROSS SECTION

(Thru frame)

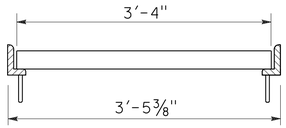

LONGITUDINAL SECTION

(Thru frame and grate)

RECTANGULAR FRAME DETAILS

(For all rectangular grates)

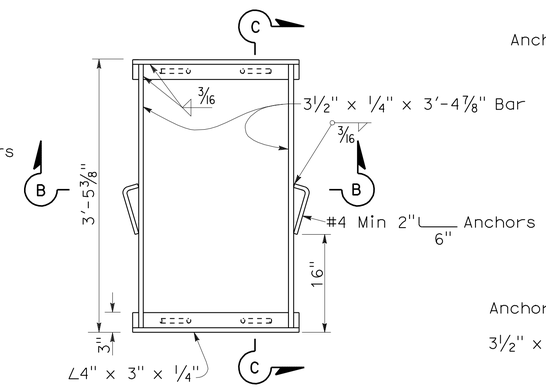

TYPICAL FRAME

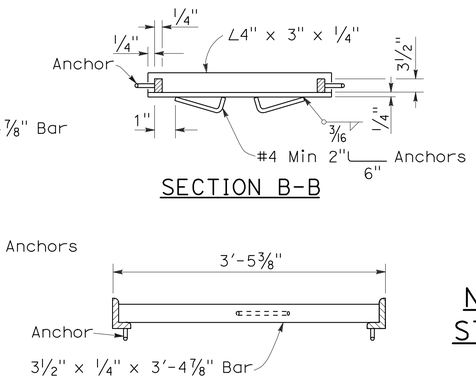

SECTION B-B

SECTION C-C

ALTERNATIVE ANCHOR FOR RECTANGULAR FRAME

(For details not shown, See Rectangular Frame Details)

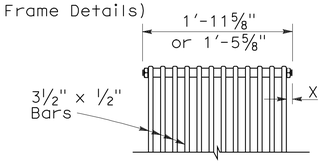

BOLTED END BLOCK

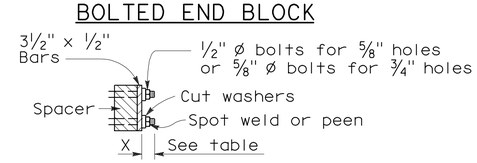

BOLTING DETAIL

ALTERNATIVE BOLTED GRATE

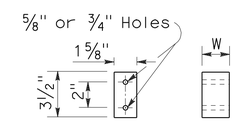

BAR SPACER

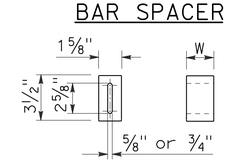

ALTERNATIVE SPACER

W = 1⅜" or 2"

GRATE BAR SPACING TABLE

TYPE	No. OF BARS	CLEAR BAR SPACING	X
18-9	9	1⅜"	1 1/16"
24-9	9	2"	1 9/16"
24-12	12	1⅜"	1¼"

INLET TYPE	COVER TYPE	WEIGHT LB
OS	PLATE	174
OL-7	PLATE	170
OL-10	PLATE	170
OL-14	PLATE	170
OL-21	PLATE	170
OCP	PLATE	112
OCPI	PLATE	112
OCPI	REDWOOD	42
OMP	PLATE	177
OMPI	PLATE	177

INLET TYPE	GRATE TYPE	No. OF GRATES	WEIGHT LB
GDO	24-12	2	634
GOL-7	24-12	1	326
GOL-10	24-12	1	326
GO,G1,G2,G3,G4 (TYPE 24)	24-9	1	263
	24-12	1	326
G4 (TYPE 18),G5,G6	18-9	1	249
GT1	18-9	2	498
GT2	18-9	2	498
GT3	24-12	2	652
GT4	24-12	2	652
TRASH RACK			22

BASIS FOR MISC IRON & STEEL FINAL PAY WEIGHTS FOR DRAINAGE INLETS

(See General Notes, No 8)

STATE OF CALIFORNIA
DEPARTMENT OF TRANSPORTATION

GRATE DETAILS

NO SCALE

RSP D77A DATED JANUARY 18, 2008 SUPERSEDES STANDARD PLAN D77A DATED MAY 1, 2006 - PAGE 155 OF THE STANDARD PLANS BOOK DATED MAY 2006.

REVISED STANDARD PLAN RSP D77A

2006 REVISED STANDARD PLAN RSP D77A

12-14-07

DIST	COUNTY	ROUTE	POST MILES TOTAL PROJECT	SHEET NO.	TOTAL SHEETS
03	Pla	267	4.9/6.7	60	74

Raymond Don Tsztoo
REGISTERED CIVIL ENGINEER

June 6, 2008
PLANS APPROVAL DATE

REGISTERED PROFESSIONAL ENGINEER
Raymond Don Tsztoo
No. C37332
Exp. 6-30-08
CIVIL
STATE OF CALIFORNIA

The State of California or its officers or agents shall not be responsible for the accuracy or completeness of electronic copies of this plan sheet.

To accompany plans dated 4-12-10

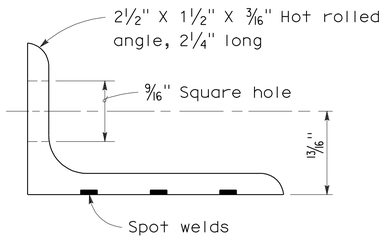

ANGLE

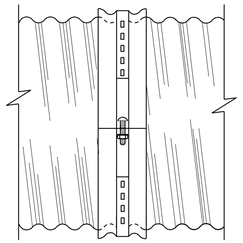

SIDE VIEW
ANGLE

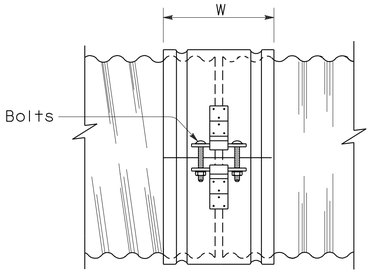

SIDE VIEW
SINGLE BAR AND STRAP

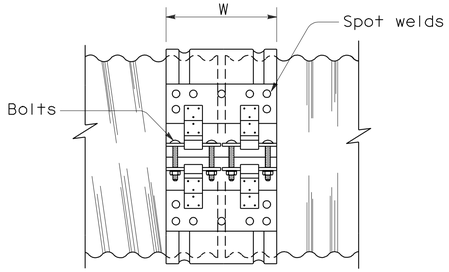

SIDE VIEW
DOUBLE BAR AND STRAP

NOTES:

1. All ferrous metal coupling band connection hardware shall be galvanized or electroplated in accordance with the Standard Specifications.
2. Dimensions and thicknesses shown are minimum.
3. Spot welds shall develop minimum required strength of strap.
4. Fillet welds of equivalent strength may be substituted for spot welds or rivets.
5. Dimension depends upon whether end condition is lips up or lips down.

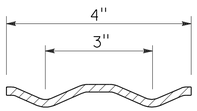

SECTION

H-4 HUGGER BAND

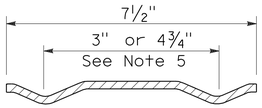

SECTION

H-7 HUGGER BAND

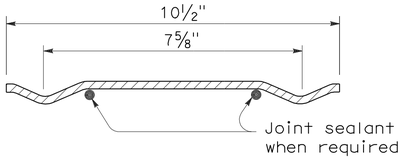

SECTION

H-10 HUGGER BAND

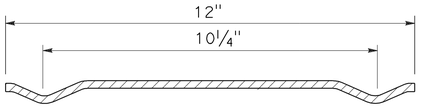

SECTION

H-12 HUGGER BAND

HUGGER COUPLING BANDS

STATE OF CALIFORNIA
DEPARTMENT OF TRANSPORTATION

CORRUGATED METAL PIPE COUPLING DETAILS No. 4 HUGGER COUPLING BANDS

NO SCALE

RSP D97D DATED JUNE 6, 2008 SUPERSEDES STANDARD PLAN D97D
DATED MAY 1, 2006 - PAGE 186 OF THE STANDARD PLANS BOOK DATED MAY 2006.

REVISED STANDARD PLAN RSP D97D

2006 REVISED STANDARD PLAN RSP D97D

3-24-08

DIST	COUNTY	ROUTE	POST MILES TOTAL PROJECT	SHEET NO.	TOTAL SHEETS
03	Pla	267	4.9/6.7	61	74

Raymond Don Tsztoo
REGISTERED CIVIL ENGINEER

June 6, 2008
PLANS APPROVAL DATE

REGISTERED PROFESSIONAL ENGINEER Raymond Don Tsztoo No. C37332 Exp. 6-30-08 CIVIL STATE OF CALIFORNIA

The State of California or its officers or agents shall not be responsible for the accuracy or completeness of electronic copies of this plan sheet.

ANNULAR AND HELICAL PROFILE

COUPLING TYPE	PIPE CORRUGATION	PIPE SIZE	W OR A	PIPE WALL THICKNESS CSP	PIPE WALL THICKNESS CAP	BAND THICKNESS CSP	BAND THICKNESS CAP	BAR AND STRAP (CSP ONLY) STRAP THICKNESS	BOLTS Dia	BAR Dia	BAR YIELD STRENGTH	ANGLE DIMENSIONS CSP	ANGLE DIMENSIONS CAP	BOLTS (No.- Dia) CSP	BOLTS (No.- Dia) CAP	RIVETS ANGLE TO BAND CSP	RIVETS ANGLE TO BAND CAP	SPOT WELDS ANGLE TO BAND CSP
TWO PIECE INTEGRAL FLANGE	1½′ × ¼"	6"-10"	7"	0.052"-0.079"	0.048"-0.060"	0.052"	0.060"							2-⅜"	2-⅜"			
		12"-18"	7"	0.052"-0.079"		0.064"								2-½"				
	2⅔" × ½"	12"-24"	7"	0.052"-0.079"	0.060"-0.105"	0.064"	0.060"							2-½"	2-½"			
UNIVERSAL	2⅔" × ½"	THROUGH 36"	12"	0.052"-0.138"	0.060"-0.135"	0.052"	0.060"					2" × 2" × 3/16"	2" × 2" × 3/16"	3-½"	3-½"	3-⅜"	3-⅜"	3-½"
		42"-60"	12"	0.052"-0.168"	0.075"-0.164"	0.052"	0.060"					2" × 2" × 3/16"	2" × 2" × 3/16"	3-½"	3-½"	3-⅜"	3-⅜"	5-½"
		THROUGH 72"	12"	0.052"-0.168"	0.164"	0.052"	0.105"	0.079"	½"	⅞"	32 ksi	2" × 2" × 3/16"	2" × 2" × 3/16"	3-½"	3-½"	3-⅜"	3-⅜"	5-½"
		78"-84"	16¼"	0.168"		0.079"		DOUBLE 0.079"	½"	⅞"	32 ksi							
ANNULAR	2⅔" × ½"	THROUGH 36"	7"	0.064"-0.138"	0.060"-0.135"	0.052"	0.060"	0.079"	½"	⅞"	32 ksi	2" × 2" × 3/16"	2" × 2" × 3/16"	2-½"	2-½"	3-⅜"	3-⅜"	3-½"
		42"-72"	12"	0.064"-0.168"	0.075"-0.164"	0.052"	0.105"	0.079"	½"	⅞"	32 ksi	2" × 2" × 3/16"	2" × 2" × 3/16"	3-½"	3-½"	3-⅜"	3-⅜"	5-½"
		78"-84"	12"	0.168"		0.079"		0.109"	½"	⅞"	45 ksi	2" × 2" × 3/16"		3-½"		3-⅜"		5-½"
	3" × 1"	48"-90"	14"	0.064"-0.109"		0.052"		0.079"	½"	⅞"	32 ksi	2" × 2" × 3/16"		3-½"		3-⅜"		5-½"
		96"-120"	14"	0.079"-0.109"		0.052"		0.109"	½"	⅞"	45 ksi	2" × 2" × 3/16"		3-½"		4-⅜"		
		42"-108"	14"		0.060"-0.135"		0.060"						2" × 2" × 3/16"		3-½"		3-⅜"	
HELICAL	2⅔" × ½"	THROUGH 36"	12"	0.052"-0.138"	0.060"-0.135"	0.052"	0.060"	0.079"	½"	⅞"	32 ksi	2" × 2" × 3/16"	2" × 2" × 3/16"	3-½"	3-½"	3-⅜"	3-⅜"	3-½"
		42"-72"	12"	0.052"-0.168"	0.075"-0.164"	0.052"	0.060"	0.079"	½"	⅞"	32 ksi	2" × 2" × 3/16"	2" × 2" × 3/16"	3-½"	3-½"	3-⅜"	3-⅜"	5-½"
		78"-84"	12"	0.168"		0.079"		0.109"	½"	⅞"	45 ksi	2" × 2" × 3/16"		3-½"		3-⅜"		5-½"
	3" × 1"	48"-90"	14"	0.064"-0.109"		0.052"		0.079"	½"	⅞"	32 ksi	2" × 2" × 3/16"		3-½"		3-⅜"		5-½"
		96"-120"	14"	0.079"-0.109"		0.052"		0.109"	½"	⅞"	45 ksi	2" × 2" × 3/16"		3-½"		4-⅜"		
		42"-108"	14"		0.060"-0.135"		0.060"						2" × 2" × 3/16"		3-½"		3-⅜"	
HUGGER	2⅔" × ½" REROLLED END	12"-54"	4"	0.052"-0.109"		0.052"						2½" × 1½" × 3/16"	2½" × 1½" × 3/16"	1-½"				3-½"
		60"-66"	4"	0.109"		0.064"						2½" × 1½" × 3/16"	2½" × 1½" × 3/16"	1-½"				3-½"
		36"-48"	4"	0.138"		0.064"						2½" × 1½" × 3/16"	2½" × 1½" × 3/16"	1-½"				3-½"
		THROUGH 72"	10½"	0.052"-0.168"		0.052"		0.079"	½"	⅞"	32 ksi							
		78"-84"	10½"	0.168"		0.079"		0.109"	½"	⅞"	45 ksi							
	3" × 1" REROLLED END	48"-90"	10½"	0.064"-0.109"		0.052"		0.079"	½"	⅞"	32 ksi							
		96"-120"	10½"	0.079"-0.109"		0.052"		0.109"	½"	⅞"	45 ksi							
	5" × 1" REROLLED END	48"-66"	7½"	0.064"-0.109"		0.064"		0.079"	½"	⅞"	32 ksi	2½" × 1½" × 3/16"	2½" × 1½" × 3/16"	1-½"				3-½"
		72"-90"	7½"	0.064"-0.079"		0.064"		0.079"	½"	⅞"	32 ksi	2½" × 1½" × 3/16"	2½" × 1½" × 3/16"	1-½"				3-½"
		48"-90"	7½"	0.064"-0.138"		0.064"		0.079"	½"	⅞"	32 ksi							
		48"-120"	12" SEE	0.064"-0.109"		0.064"		0.079"	½"	⅞"	32 ksi							
		48"-84"	12" NOTE	0.138"		0.064"		0.079"	½"	⅞"	32 ksi							
		90"-120"	12" 11	0.138"		0.064"		DOUBLE 0.079"	½"	⅞"	32 ksi							

SPIRAL RIB PROFILE

COUPLING TYPE	PIPE CORRUGATION	PIPE SIZE	W	PIPE WALL THICKNESS SSRP	PIPE WALL THICKNESS ASRP	BAND THICKNESS SSRP	BAND THICKNESS ASRP	BAR AND STRAP (SSRP ONLY) STRAP THICKNESS	BOLTS Dia	BAR Dia	BAR YIELD STRENGTH	ANGLE DIMENSIONS SSRP	ANGLE DIMENSIONS ASRP	BOLTS (No.- Dia) SSRP	BOLTS (No.- Dia) ASRP	RIVETS ANGLE TO BAND SSRP	RIVETS ANGLE TO BAND ASRP	SPOT WELDS ANGLE TO BAND SSRP
ANNULAR	2⅔" × ½" * REROLLED END	24"-36"	12"	0.064"-0.109"	0.060"-0.105"	0.052"	0.060"	0.079"	½"	⅞"	32 ksi	2" × 2" × 3/16"	2" × 2" × 3/16"	3-½"	3-½"	3-⅜"	3-⅜"	5-½"
		42"-60"	12"	0.064"-0.109"	0.075"-0.105"	0.052"	0.105"	0.079"	½"	⅞"	32 ksi	2" × 2" × 3/16"	2" × 2" × 3/16"	3-½"	3-½"	3-⅜"	3-⅜"	5-½"
		66"-72"	12"	0.064"-0.109"		0.052"		0.079"	½"	⅞"	32 ksi	2" × 2" × 3/16"	2" × 2" × 3/16"	3-½"	3-½"	3-⅜"	3-⅜"	5-½"
		78"-114"	12"	0.079"-0.109"		0.079"		0.109"	½"	⅞"	45 ksi	2" × 2" × 3/16"	2" × 2" × 3/16"	3-½"	3-½"	3-⅜"	3-⅜"	5-½"
HUGGER	2⅔" × ½" * REROLLED END	24"-72"	10½"	0.064"-0.109"		0.052"		0.079"	½"	⅞"	32 ksi							
		78"-84"	10½"	0.109"		0.079"		0.109"	½"	⅞"	45 ksi							

* See Note 14.

14. All profiles of Spiral Rib Pipe (¾" × ¾" ribs at 7½" pitch and ¾" × 1" ribs at 11½" pitch in both steel and aluminum and ¾" × 1" ribs at 8½" pitch in steel only) shall be manufactured with rerolled ends. Corrugation profile of the rerolled ends shall be 2⅔" × ½" annual corrugations with a minimum of two full corrugations at each end.

NOTES:

To accompany plans dated 4-12-10

1. All ferrous metal coupling band connection hardware shall be galvanized or electro-plated in accordance with the Standard Specifications.
2. For helically corrugated coupling bands, the connection angles may be oriented parallel to the pipe axis, provided connecting holes are slotted lengthwise sufficiently to allow adjustment for the helix angle.
3. Tension strap may be connected to band with either spot welds or fillet welds that develop minimum required strength of strap.
4. Use 1¼" gage line dimension on attached angle leg for rivets and spot welds.
5. Band thickness shall not be less than:
   a. 3 standard thicknesses lighter than the thickness of the pipe for Corrugated Steel Pipe.
   b. 2 standard thicknesses lighter than the thickness of the pipe and in no case lighter than 0.060" for Corrugated Aluminum Pipe.
6. Dimensions, thicknesses and strengths shown are minimum.
7. For pipe arches use same width band as for round pipe of equal periphery.
8. Fillet welds of equivalent strenght may be substituted for spot welds or rivets.
9. Spot welds shall develop minimum required strength of strap.
10. Pipe with rerolled ends having at least two 2⅔" × ½" annular corrugations at each end with or without an upturned flange may be connected with any of the annular coupling bands shown for pipe of the same diameter and wall thickness and having 2⅔" × ½" corrugations.
11. In the case of H-12 huggerbands, two piece bands are required for diameters through 96" and three piece bands are required for diameters 102" through 120".
12. Two piece bands are required for pipes greater than 42" diameter.
13. The 2¼" × 2" × 0.109" thick galvanized die-formed angle connector may be used in lieu of the 2" × 2" × 3/16" angle connector for standard joints only on pipes through 72" diameter.

STATE OF CALIFORNIA
DEPARTMENT OF TRANSPORTATION

CORRUGATED METAL PIPE COUPLING DETAILS No. 5 STANDARD JOINT

NO SCALE

RSP D97E DATED JUNE 6, 2008 SUPERSEDES STANDARD PLAN D97E
DATED MAY 1, 2006 - PAGE 187 OF THE STANDARD PLANS BOOK DATED MAY 2006.

REVISED STANDARD PLAN RSP D97E

2006 REVISED STANDARD PLAN RSP D97E

4-2-08

DIST	COUNTY	ROUTE	POST MILES TOTAL PROJECT	SHEET NO.	TOTAL SHEETS
03	Pla	267	4.9/6.7	62	74

Raymond Don Tsztoo
REGISTERED CIVIL ENGINEER

June 6, 2008
PLANS APPROVAL DATE

REGISTERED PROFESSIONAL ENGINEER Raymond Don Tsztoo No. C37332 Exp. 6-30-08 CIVIL STATE OF CALIFORNIA

The State of California or its officers or agents shall not be responsible for the accuracy or completeness of electronic copies of this plan sheet.

To accompany plans dated 4-12-10

ANNULAR AND HELICAL PROFILE

COUPLING TYPE	PIPE CORRUGATION	PIPE SIZE	W OR A	PIPE WALL THICKNESS CSP	PIPE WALL THICKNESS CAP	BAND THICKNESS CSP	BAND THICKNESS CAP	BAR AND STRAP (CSP ONLY) STRAP THICKNESS	BOLTS Dia	BAR Dia	BAR YIELD STRENGTH	ANGLE DIMENSIONS CSP	ANGLE DIMENSIONS CAP	BOLTS (No. - Dia) CSP	BOLTS (No. - Dia) CAP	RIVETS ANGLE TO BAND CSP	RIVETS ANGLE TO BAND CAP	SPOT WELDS ANGLE TO BAND CSP
TWO PIECE INTEGRAL FLANGE	1½" × ¼"	6"-10"	7"	0.064"-0.079"	0.060"	0.064"	0.060"							2-⅜"	2-⅜"			
	2⅔" × ½"	12"-24"	12"		0.060"-0.105"		0.060"								3-½"			
UNIVERSAL	2⅔" × ½"	THROUGH 36"	12"	0.064"-0.138"	0.060"-0.135"	0.064"	0.060"	0.079"	½"	⅞"	32 ksi	2" × 2" × 3/16"	2" × 2" × 3/16"	3-½"	3-½"	3-⅜"	3-⅜"	5-½"
		42"-60"	16¼"	0.064"-0.168"	0.060"-0.164"	0.064"	0.060"	DOUBLE 0.079"	½"	⅞"	32 ksi	2" × 2" × ¼"	2" × 2" × ¼"	4-½"	4-½"	5-⅜"	5-⅜"	
ANNULAR	2⅔" × ½"	THROUGH 36"	12"	0.064"-0.138"	0.060"-0.135"	0.064"	0.060"					2" × 2" × 3/16"	2" × 2" × 3/16"	3-½"	3-½"	3-⅜"	3-⅜"	5-½"
		42"-60"	12"	0.064"-0.079"		0.064"						2" × 2" × 3/16"		3-½"		3-⅜"		5-½"
		42"-60"	12"	0.109"-0.168"	0.135"-0.164"	0.064"	0.075"					2" × 2" × ¼"	2" × 2" × ¼"	3-½"	3-½"	5-⅜"	5-⅜"	
		66"-72"	24"		0.164"		0.105"						2" × 2" × ¼"		5-½"		5-½"	
		66"-84"	24"	0.109"-0.168"		0.064"						2" × 2" × ¼"		5-½"		7-⅜"		
		42"-54"	12"		0.060"-0.105"		0.060"						2" × 2" × 3/16"		3-½"		3-⅜"	
	3" × 1"	48"-60"	14"	0.064"-0.079"		0.064"						2" × 2" × 3/16"		3-½"		3-⅜"		5-½"
		48"-60"	14"	0.109"		0.064"						2" × 2" × 3/16"		3-½"		5-⅜"		
		66"-120"	25"	0.064"-0.109"		0.064"						2" × 2" × 3/16"		5-½"		9-⅜"		
		42"-60"	14"		0.060"-0.105"		0.060"						2" × 2" × 3/16"		3-½"		5-⅜"	
		42"-60"	14"		0.135"		0.075"						2" × 2" × ¼"		3-½"		5-⅜"	
		66"-96"	25"		0.060"-0.135"		0.060"						2" × 2" × ¼"		5-½"		7-⅜"	
		96"-108"	25"		0.135"		0.075"						2" × 2" × ¼"		5-½"		7-⅜"	
HELICAL	2⅔" × ½"	THROUGH 36"	12"	0.064"-0.138"	0.060"-0.135"	0.064"	0.060"					2" × 2" × 3/16"	2" × 2" × 3/16"	3-½"	3-½"	3-⅜"	3-⅜"	5-½"
		42"-54"	12"		0.060"-0.105"		0.060"						2" × 2" × 3/16"		3-½"		3-⅜"	
		42"-60"	12"	0.064"-0.079"		0.064"						2" × 2" × 3/16"		3-½"		3-⅜"		5-½"
		42"-60"	12"	0.109"-0.168"	0.135"-0.164"	0.064"	0.075"					2" × 2" × ¼"	2" × 2" × ¼"	3-½"	3-½"	5-⅜"	5-⅜"	
		66'-84"	24"	0.109"-0.168"		0.064"						2" × 2" × ¼"		5-½"		7-⅜"		
		66"-72"	24"		0.164"		0.105"						2" × 2" × ¼"		5-½"		5-⅜"	
	3" × 1"	48"-60"	14"	0.064"-0.079"		0.064"						2" × 2" × 3/16"		3-½"		3-⅜"		5-½"
		48"-60"	14"	0.109"		0.064"						2" × 2" × 3/16"		3-½"		5-⅜"		
		66"-120"	25"	0.064"-0.109"		0.064"						2" × 2" × 3/16"		5-½"		9-⅜"		
		42"-60"	14"		0.060"-0.105"		0.060"						2" × 2" × 3/16"		3-½"		5-⅜"	
		42"-60"	14"		0.135"		0.075"						2" × 2" × ¼"		3-½"		5-⅜"	
		66"-96"	25"		0.060"-0.135"		0.060"						2" × 2" × ¼"		5-½"		7-⅜"	
		96"-108"	25"		0.135"		0.075"						2" × 2" × ¼"		5-½"		7-⅜"	
HUGGER	2⅔" × ½" REROLLED END	THROUGH 48"	10½"	0.109"		0.064"		0.079"	½"	⅞"	32 ksi							
		54"- 66"	10½"	0.109"		0.064"		DOUBLE 0.079"	½"	⅞"	32 ksi							
		THROUGH 54"	10½"	0.064"-0.079"		0.064"		0.079"	½"	⅞"	32 ksi							
		THROUGH 60"	10½"	0.138"		0.079"		DOUBLE 0.079"	½"	⅞"	32 ksi							
		66"-72"	10½"	0.138"		0.109"		DOUBLE 0.079"	½"	⅞"	32 ksi							
		THROUGH 72"	10½"	0.168"		0.109"		DOUBLE 0.109"	½"	⅞"	45 ksi							
	3" × 1" REROLLED END	48"-84"	10½"	0.109"		0.079"		DOUBLE 0.079"	½"	⅞"	32 ksi							
		48"-90"	10½"	0.064"-0.079"		0.064"		DOUBLE 0.079"	½"	⅞"	32 ksi							
		96"-102"	10½"	0.079"		0.079"		DOUBLE 0.079"	½"	⅞"	32 ksi							
		90"-120"	10½"	0.109"		0.109"		DOUBLE 0.109"	½"	⅞"	45 ksi							

SPIRAL RIB PROFILE

COUPLING TYPE	PIPE CORRUGATION	PIPE SIZE	W	PIPE WALL THICKNESS SSRP	PIPE WALL THICKNESS ASRP	BAND THICKNESS SSRP	BAND THICKNESS ASRP	BAR AND STRAP (SSRP ONLY) STRAP THICKNESS	BOLTS Dia	BAR Dia	BAR YIELD STRENGTH	ANGLE DIMENSIONS SSRP	ANGLE DIMENSIONS ASRP	BOLTS (No.- Dia) SSRP	BOLTS (No.- Dia) ASRP	RIVETS ANGLE TO BAND SSRP	RIVETS ANGLE TO BAND ASRP	SPOT WELDS ANGLE TO BAND SSRP
ANNULAR	2⅔" × ½" * REROLLED END	24"-36"	12"	0.064"-0.109"	0.060"-0.105"	0.064"	0.060"	0.079"	½"	⅞"	32 ksi	2" × 2" × 3/16"	2" × 2" × 3/16"	3-½"	3-½"	3-⅜"	3-⅜"	5-½"
		42"-60"	12"	0.064"-0.079"	0.075"-0.105"	0.064"	0.075"	0.079"	½"	⅞"	32 ksi	2" × 2" × 3/16"	2" × 2" × 3/16"	3-½"	3-½"	3-⅜"	3-⅜"	5-½"
		42"-60"	12"	0.109"		0.064"		0.079"	½"	⅞"	32 ksi	2" × 2" × ¼"		3-½"		5-⅜"		
		66"-84"	24"	0.109"		0.064"		0.079"	½"	⅞"	32 ksi	2" × 2" × ¼"		5-½"		7-⅜"		
HUGGER	2⅔" × ½" * REROLLED END	24"-54"	10½"	0.064"-0.079"		0.064"		0.079"	½"	⅞"	32 ksi							
		24"-48"	10½"	0.109"		0.064"		0.079"	½"	⅞"	32 ksi							
		54"-66"	10½"	0.109"		0.064"		Double 0.079"	½"	⅞"	32 ksi							

* See Note 13.

NOTES:

1. All ferrous metal coupling band connection hardware shall be galvanized or electro-plated in accordance with the Standard Specifications.
2. For helically corrugated coupling bands, the connection angles may be oriented parallel to the pipe axis, provided connecting holes are slotted lengthwise sufficiently to allow adjustment for the helix angle.
3. Tension strap may be connected to band with either spot welds or fillet welds that develop minimum required strength of strap.
4. Use 1¼" gage line dimension on attached angle leg for rivets and spot welds.
5. Band thickness shall not be less than:
   a. 3 standard thicknesses lighter than the thickness of the pipe for Corrugated Steel Pipe.
   b. 2 standard thicknesses lighter than the thickness of the pipe and in no case lighter than 0.060" for Corrugated Aluminum Pipe.
6. Dimensions, thicknesses and strengths shown are minimum.
7. For pipe arches use same width band as for round pipe of equal periphery.
8. Fillet welds of equivalent strength may be substituted for spot welds or rivets.
9. Spot welds shall develop minimum required strength of strap.
10. Pipe with rerolled ends having at least two 2⅔" × ½" annular corrugations at each end with or without an upturned flange may be connected with any of the annular coupling bands shown for pipe of the same diameter and wall thickness and having 2⅔" × ½" corrugations.
11. In the case of H-12 huggerbands, two piece bands are required for diameters through 96" and three piece bands are required for diameters 102" through 120".
12. Two piece bands are required for pipes greater than 42" diameter.
13. All profiles of Spiral Rib Pipe (¾" × ¾" ribs at 7½" pitch and ¾" × 1" ribs at 11½" pitch in both steel and aluminum and ¾" × 1" ribs at 8½" pitch in steel only) shall be manufactured with rerolled ends. Corrugation profile of the rerolled ends shall be 2⅔" × ½" annual corrugations with a minimum of two full corrugations at each end.

STATE OF CALIFORNIA
DEPARTMENT OF TRANSPORTATION

CORRUGATED METAL PIPE COUPLING DETAILS No. 6 POSITIVE JOINT

NO SCALE

RSP D97F DATED JUNE 6, 2008 SUPERSEDES STANDARD PLAN D97F
DATED MAY 1, 2006 - PAGE 188 OF THE STANDARD PLANS BOOK DATED MAY 2006.

REVISED STANDARD PLAN RSP D97F

2006 REVISED STANDARD PLAN RSP D97F

4-2-08

DIST	COUNTY	ROUTE	POST MILES TOTAL PROJECT	SHEET NO.	TOTAL SHEETS
03	Pla	267	4.9/6.7	63	74

Raymond Don Tsztoo
REGISTERED CIVIL ENGINEER

June 6, 2008
PLANS APPROVAL DATE

REGISTERED PROFESSIONAL ENGINEER
Raymond Don Tsztoo
No. C37332
Exp. 6-30-08
CIVIL
STATE OF CALIFORNIA

The State of California or its officers or agents shall not be responsible for the accuracy or completeness of electronic copies of this plan sheet.

ANNULAR AND HELICAL PROFILE

COUPLING TYPE	PIPE CORRUGATION	PIPE SIZE	W OR A	PIPE WALL THICKNESS		BAND THICKNESS		BAR AND STRAP (CSP ONLY)			ANGLE						
											DIMENSIONS		BOLTS (No.- Dia)		RIVETS ANGLE TO BAND		SPOT WELDS ANGLE TO BAND
				CSP	CAP	CSP	CAP	STRAP THICKNESS	BOLTS Dia	BAR Dia	CSP	CAP	CSP	CAP	CSP	CAP	CSP
TWO PIECE INTEGRAL FLANGE	1½′ × ¼″	6″	7″	0.064″-0.168″		0.052″							3-⅜″				
	1½′ × ¼″	8″-10″	7″	0.064″-0.168″	0.060″-0.164″	0.064″	0.060″						3-⅜″	3-⅜″			
ANNULAR	2⅔″ × ½″	THROUGH 24″	12″	0.064″-0.168″	0.060″-0.164″	0.064″	0.060″				2″ × 2″ × 3⁄16″	2″ × 2″ × 3⁄16″	3-½″	3-½″	3-⅜″	3-⅜″	3-½″
HUGGER	2⅔″ × ½″ REROLLED END	THROUGH 24″	10½″	0.064″-0.168″		0.064″		0.079″	½″	⅞″							

SPIRAL RIB PROFILE

COUPLING TYPE	PIPE CORRUGATION	PIPE SIZE	W	PIPE WALL THICKNESS		BAND THICKNESS		BAR AND STRAP (SSRP ONLY)			ANGLE						
											DIMENSIONS		BOLTS (No.- Dia)		RIVETS ANGLE TO BAND		SPOT WELDS ANGLE TO BAND
				SSRP	ASRP	SSRP	ASRP	STRAP THICKNESS	BOLTS Dia	BAR Dia	SSRP	ASRP	SSRP	ASRP	SSRP	ASRP	SSRP
ANNULAR	2⅔″ × ½″ * REROLLED END	24″	12″	0.064″-0.168″	0.060″-0.164″	0.064″	0.060″				2″ × 2″ × 3⁄16″	2″ × 2″ × 3⁄16″	3-½″	3-½″	3-⅜″	3-⅜″	3-½″
HUGGER	2⅔″ × ½″ * REROLLED END	24″	10½″	0.064″-0.168″		0.064″		0.079″	½″	⅞″							

* See Note 12.

12. All profiles of Spiral Rib Pipe (¾″ × ¾″ ribs at 7½″ pitch and ¾″ × 1″ ribs at 11½″ pitch in both steel and aluminum and ¾″ × 1″ ribs at 8½″ pitch in steel only) shall be manufactured with rerolled ends. Corrugation profile of the rerolled ends shall be 2⅔″ × ½″ annual corrugations with a minimum of two full corrugations at each end.

NOTES:

To accompany plans dated 4-12-10

1. All ferrous metal coupling band connection hardware shall be galvanized or electro-plated in accordance with the Standard Specifications.
2. For helically corrugated coupling bands, the connection angles may be oriented parallel to the pipe axis, provided connecting holes are slotted lengthwise sufficiently to allow adjustment for the helix angle.
3. Tension strap may be connected to band with either spot welds or fillet welds that develop minimum required strength of strap.
4. Use 1¼″ gage line dimension on attached angle leg for rivets and spot welds.
5. Band thickness shall not be less than:
   a. 3 standard thicknesses lighter than the thickness of the pipe for Corrugated Steel Pipe.
   b. 2 standard thicknesses lighter than the thickness of the pipe and in no case lighter than 0.060″ for Corrugated Aluminum Pipe.
6. Dimensions, thicknesses and strengths shown are minimum.
7. For pipe arches use same width band as for round pipe of equal periphery.
8. Fillet welds of equivalent strenght may be substituted for spot welds or rivets.
9. Spot welds shall develop minimum required strength of strap.
10. Pipe with rerolled ends having at least two 2⅔″ × ½″ annular corrugations at each end with or without an upturned flange may be connected with any of the annular coupling bands shown for pipe of the same diameter and wall thickness and having 2⅔″ × ½″ corrugations.
11. For downdrain applications, two piece integral flange couplers shall have factory applied sleeve type rubber gaskets with a minimum length of 7″ measured along the length of the pipe.

STATE OF CALIFORNIA
DEPARTMENT OF TRANSPORTATION

CORRUGATED METAL PIPE COUPLING DETAILS No. 7 DOWNDRAIN

NO SCALE

RSP D97G DATED JUNE 6, 2008 SUPERSEDES STANDARD PLAN D97G
DATED MAY 1, 2006 - PAGE 189 OF THE STANDARD PLANS BOOK DATED MAY 2006.

REVISED STANDARD PLAN RSP D97G

2006 REVISED STANDARD PLAN RSP D97G

4-4-08

DIST	COUNTY	ROUTE	POST MILES TOTAL PROJECT	SHEET NO.	TOTAL SHEETS
03	Pla	267	4.9/6.7	64	74

LICENSED LANDSCAPE ARCHITECT

June 5, 2009
PLANS APPROVAL DATE

The State of California or its officers or agents shall not be responsible for the accuracy or completeness of electronic copies of this plan sheet.

LICENSED LANDSCAPE ARCHITECT — Gregory A. Balzer 2572 — Registered Expires 2-28-11 (Renewal Date) — 5-14-09 (Date) — STATE OF CALIFORNIA

To accompany plans dated 4-12-10

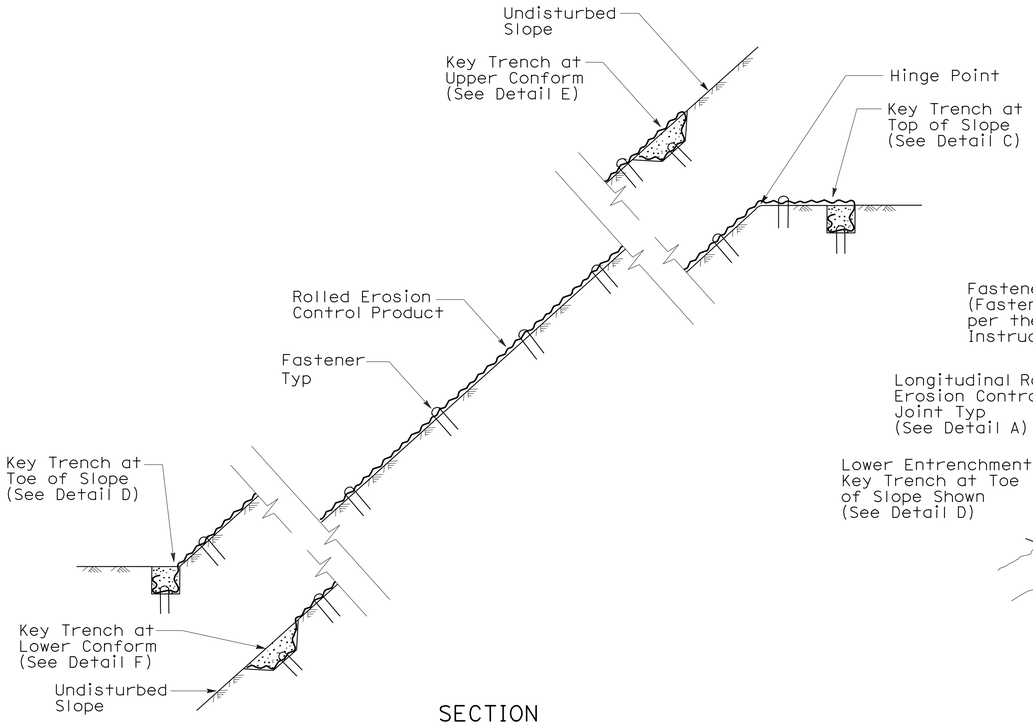

SECTION

ROLLED EROSION CONTROL PRODUCT ON SLOPE WITH VARIOUS KEY ENTRENCHMENTS

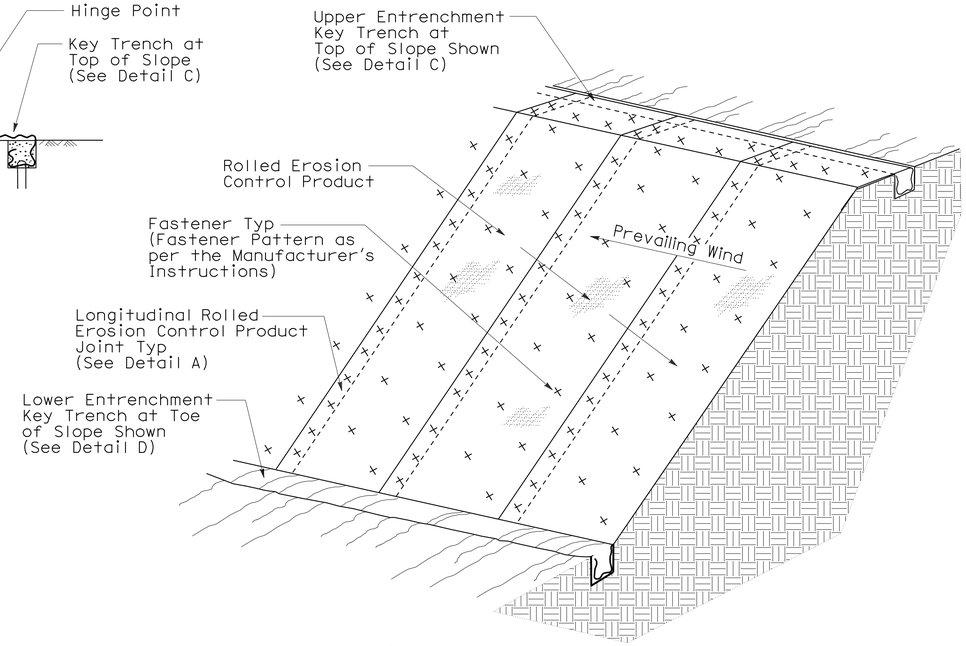

ISOMETRIC

ROLLED EROSION CONTROL PRODUCT ON SLOPE

NOTE:

1. Fiber Roll/Compost Sock shown for reference purposes only.
2. If transverse rolled erosion control product joints are required on slopes, see Detail B.

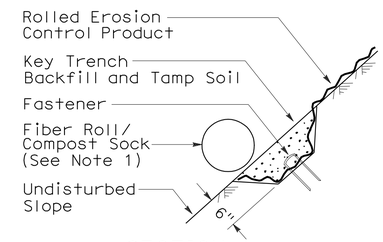

SECTION

DETAIL F KEY TRENCH AT LOWER CONFORM

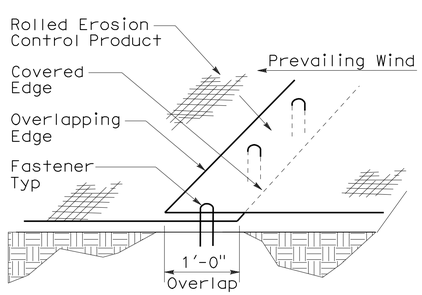

PERSPECTIVE

DETAIL A LONGITUDINAL ROLLED EROSION CONTROL PRODUCT JOINT

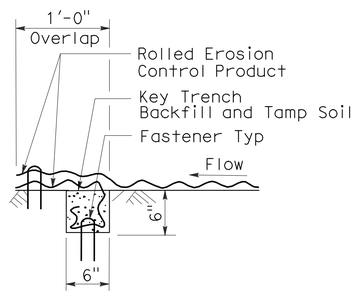

SECTION

DETAIL B TRANSVERSE ROLLED EROSION CONTROL PRODUCT JOINT

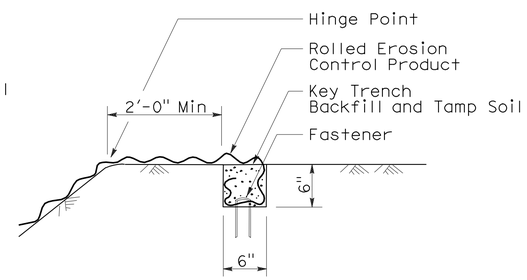

SECTION

DETAIL C KEY TRENCH AT TOP OF SLOPE

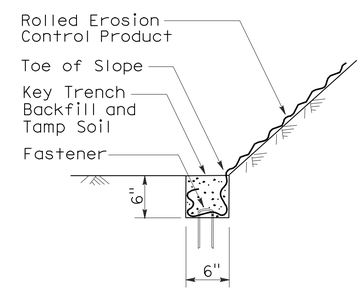

SECTION

DETAIL D KEY TRENCH AT TOE OF SLOPE

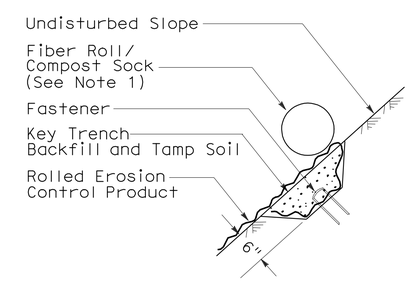

SECTION

DETAIL E KEY TRENCH AT UPPER CONFORM

STATE OF CALIFORNIA
DEPARTMENT OF TRANSPORTATION

ROLLED EROSION CONTROL PRODUCT

NO SCALE

NSP H53 DATED JUNE 5, 2009 SUPPLEMENTS
THE STANDARD PLANS BOOK DATED MAY 2006.

NEW STANDARD PLAN NSP H53

2006 NEW STANDARD PLAN NSP H53

3-4-09

DIST	COUNTY	ROUTE	POST MILES TOTAL PROJECT	SHEET NO.	TOTAL SHEETS
03	Pla	267	4.9/6.7	65	74

Randell D. Hiatt
REGISTERED CIVIL ENGINEER

June 6, 2008
PLANS APPROVAL DATE

REGISTERED PROFESSIONAL ENGINEER
Randell D. Hiatt
No. C50200
Exp. 6-30-09
CIVIL
STATE OF CALIFORNIA

The State of California or its officers or agents shall not be responsible for the accuracy or completeness of electronic copies of this plan sheet.

To accompany plans dated 4-12-10

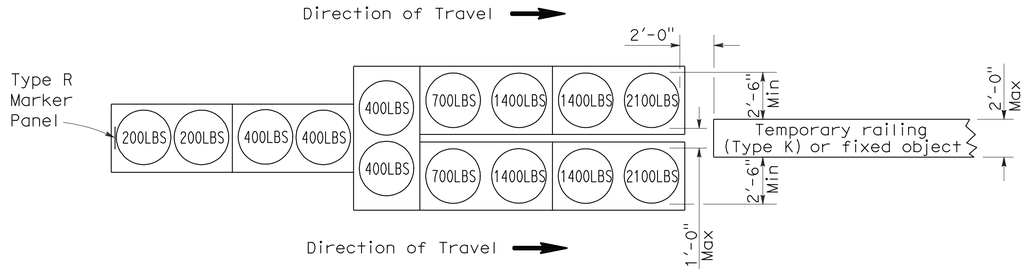

ARRAY `TU14'

Approach speed 45 mph or more

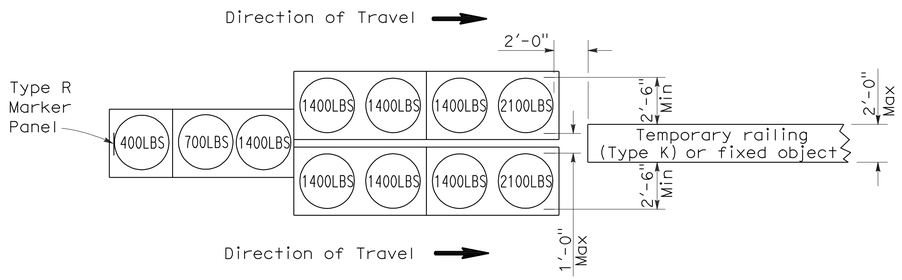

ARRAY `TU11'

Approach speed less than 45 mph

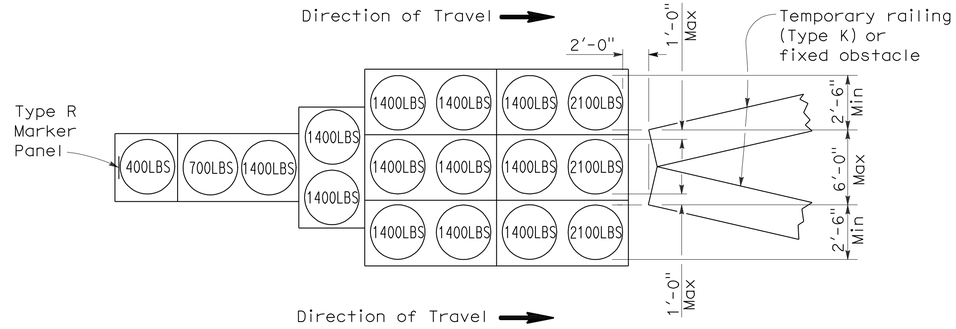

ARRAY `TU17'

Approach speed less than 45 mph

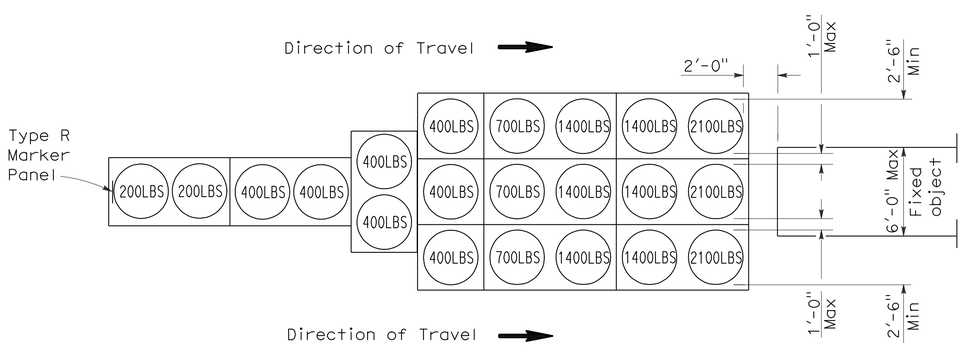

ARRAY `TU21'

Approach speed 45 mph or more

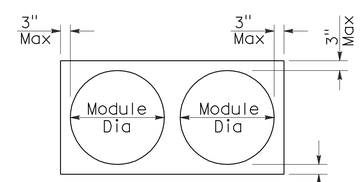

PLAN

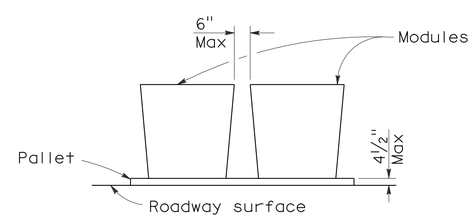

ELEVATION

CRASH CUSHION PALLET DETAIL

See Note 7

NOTES:

1. (XXX) Indicates sand filled module location and weight of sand in pounds for each module. Module spacing is based on the greater diameter of the module.
2. All sand weights are nominal.
3. Temporary crash cushion arrays shall not encroach on the traveled way.
4. Place the top of Type R marker panel 1" below the module lid.
5. Refer to Standard Plan A73B for marker details.
6. Approach speeds indicated conform to NCHRP 350 Report criteria.
7. Use of pallets is optional.

STATE OF CALIFORNIA
DEPARTMENT OF TRANSPORTATION

TEMPORARY CRASH CUSHION, SAND FILLED (UNIDIRECTIONAL)

NO SCALE

RSP T1A DATED JUNE 6, 2008 SUPERSEDES STANDARD PLAN T1A
DATED MAY 1, 2006 - PAGE 211 OF THE STANDARD PLANS BOOK DATED MAY 2006.

REVISED STANDARD PLAN RSP T1A

2006 REVISED STANDARD PLAN RSP T1A

DIST	COUNTY	ROUTE	POST MILES TOTAL PROJECT	SHEET NO.	TOTAL SHEETS
03	Pla	267	4.9/6.7	66	74

Randell D. Hiatt
REGISTERED CIVIL ENGINEER

June 6, 2008
PLANS APPROVAL DATE

REGISTERED PROFESSIONAL ENGINEER
Randell D. Hiatt
No. C50200
Exp. 6-30-09
CIVIL
STATE OF CALIFORNIA

The State of California or its officers or agents shall not be responsible for the accuracy or completeness of electronic copies of this plan sheet.

To accompany plans dated 4-12-10

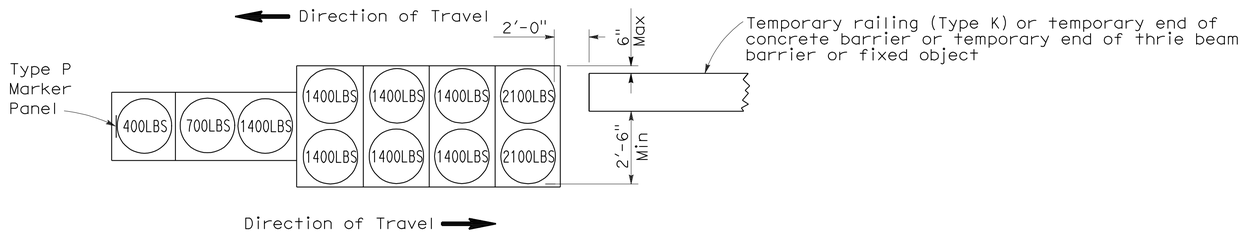

ARRAY 'TB11'

Approach speed less than 45 mph

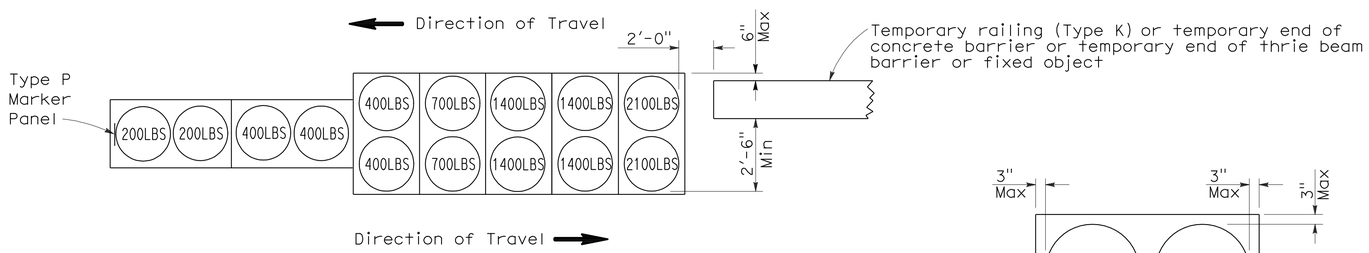

ARRAY 'TB14'

Approach speed 45 mph or more

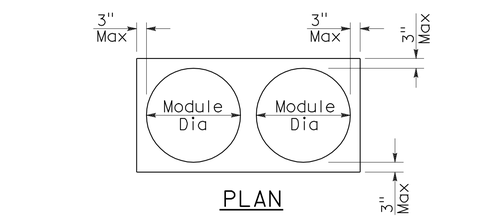

PLAN

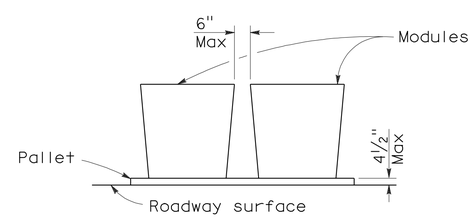

ELEVATION

CRASH CUSHION PALLET DETAIL

See Note 7

NOTES:

1. (XXX) Indicates sand filled module location and weight of sand in pounds for each module. Module spacing is based on the greater diameter of the module.
2. All sand weights are nominal.
3. Temporary crash cushion arrays shall not encroach on the traveled way.
4. Place the Type P marker panel so that the bottom of the panel rests upon the pallet.
5. Refer to Standard Plan A73B for marker details.
6. Approach speeds indicated conform to NCHRP 350 Report criteria.
7. Use of pallets is optional.

STATE OF CALIFORNIA
DEPARTMENT OF TRANSPORTATION

TEMPORARY CRASH CUSHION, SAND FILLED (BIDIRECTIONAL)

NO SCALE

RSP T1B DATED JUNE 6, 2008 SUPERSEDES STANDARD PLAN T1B
DATED MAY 1, 2006 - PAGE 212 OF THE STANDARD PLANS BOOK DATED MAY 2006.

REVISED STANDARD PLAN RSP T1B

2006 REVISED STANDARD PLAN RSP T1B

5-15-08

DIST	COUNTY	ROUTE	POST MILES TOTAL PROJECT	SHEET NO.	TOTAL SHEETS
03	Pla	267	4.9/6.7	67	74

Randell D. Hiatt
REGISTERED CIVIL ENGINEER

June 6, 2008
PLANS APPROVAL DATE

REGISTERED PROFESSIONAL ENGINEER
Randell D. Hiatt
No. C50200
Exp. 6-30-09
CIVIL
STATE OF CALIFORNIA

The State of California or its officers or agents shall not be responsible for the accuracy or completeness of electronic copies of this plan sheet.

To accompany plans dated 4-12-10

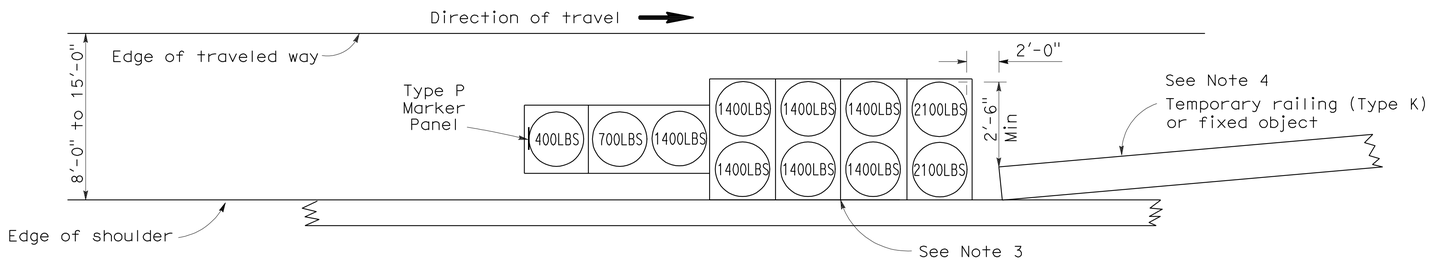

ARRAY 'TS11'

Approach speed less than 45 mph
See Note 9

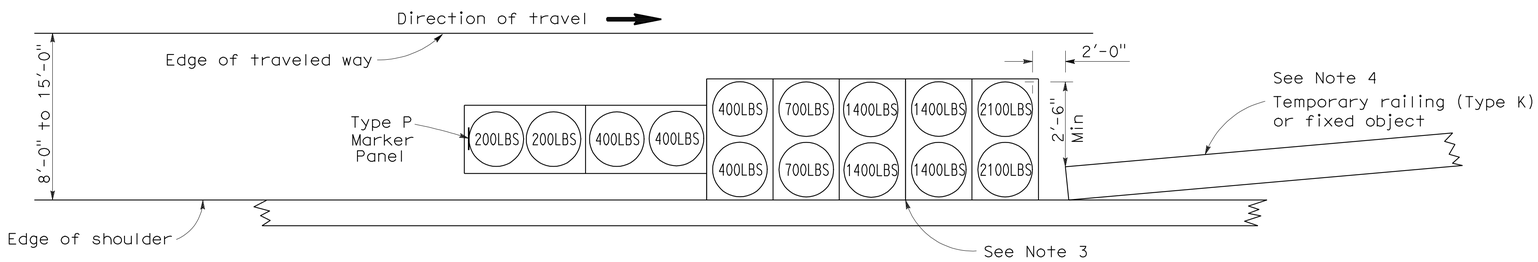

ARRAY 'TS14'

Approach speed 45 mph or more
See Note 9

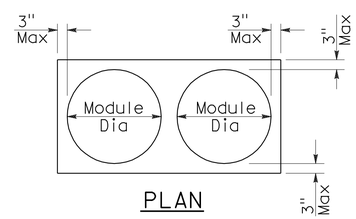

PLAN

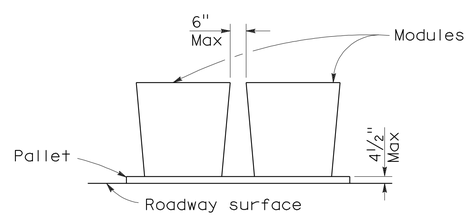

ELEVATION

CRASH CUSHION PALLET DETAIL

See Note 11

NOTES:

1. (XXX) Indicates sand filled module location and weight of sand in pounds for each module. Module spacing is based on the greater diameter of the module.
2. All sand weights are nominal.
3. The temporary crash cushion arrays shown on this plan shall be used only in locations where there will be traffic on one side of the temporary crash cushion array.
4. If the fixed object or approach end of the temporary railing is less than 15'-0" from the edge of traveled way, a temporary crash cushion is required in a construction or work zone.
5. Temporary crash cushion arrays shall not encroach on the traveled way.
6. Arrays for median shoulders shall conform to details shown on this plan for outside shoulders.
7. Place the Type P marker panel so that the bottom of the panel rests upon the pallet and faces traffic.
8. Refer to Standard Plan A73B for marker details.
9. For shoulder widths less than 8'-0", appropriate approved crash cushion protection, other than sand filled modules, shall be provided at fixed objects and at approach ends of temporary railing. The specific type of crash cushion shall be as shown on the project plans or as specified in the Special Provisions, or if not shown on the project plans or specified in the Special Provisions, shall be as approved by the Engineer.
10. Approach speeds indicated conform to NCHRP 350 Report criteria.
11. Use of pallets is optional.

STATE OF CALIFORNIA
DEPARTMENT OF TRANSPORTATION

TEMPORARY CRASH CUSHION, SAND FILLED (SHOULDER INSTALLATIONS)

NO SCALE

RSP T2 DATED JUNE 6, 2008 SUPERSEDES STANDARD PLAN T2
DATED MAY 1, 2006 - PAGE 213 OF THE STANDARD PLANS BOOK DATED MAY 2006.

REVISED STANDARD PLAN RSP T2

2006 REVISED STANDARD PLAN RSP T2

5-15-08

DIST	COUNTY	ROUTE	POST MILES TOTAL PROJECT	SHEET NO.	TOTAL SHEETS
03	Pla	267	4.9/6.7	68	74

REGISTERED CIVIL ENGINEER

November 17, 2006
PLANS APPROVAL DATE

REGISTERED PROFESSIONAL ENGINEER
Greg W. Edwards
No. C36386
Exp. 6-30-08
CIVIL
STATE OF CALIFORNIA

The State of California or its officers or agents shall not be responsible for the accuracy or completeness of electronic copies of this plan sheet.

To accompany plans dated 4-12-10

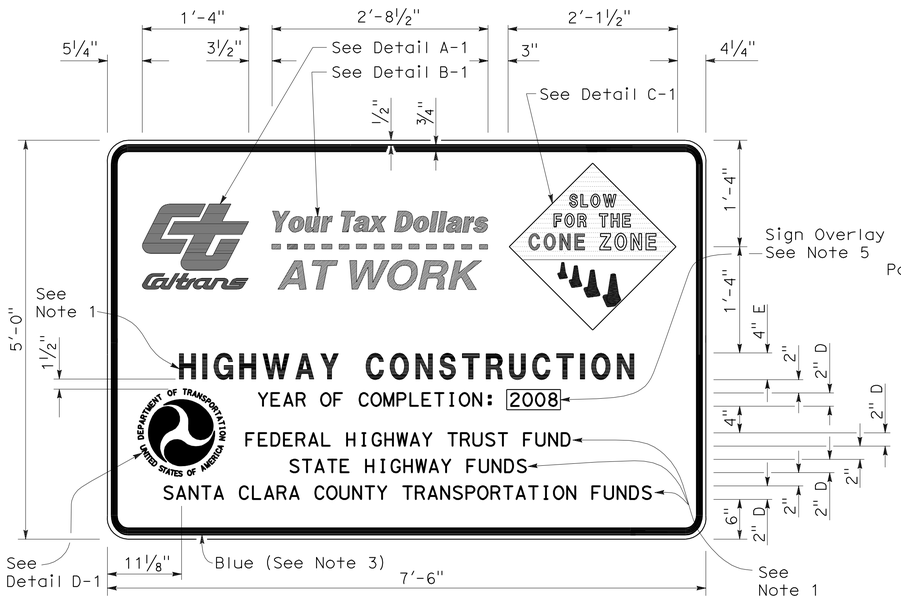

TYPE 1

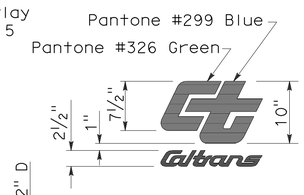

DETAIL A-1

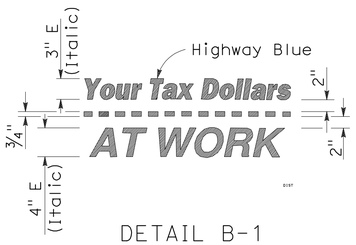

DETAIL B-1
(See Note 3)

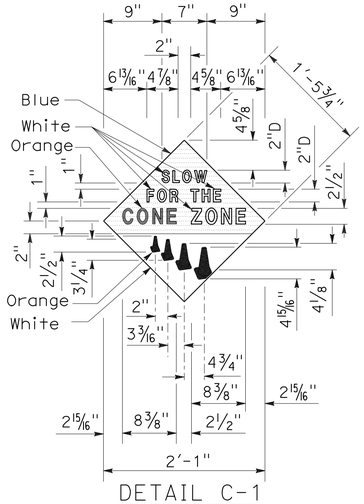

DETAIL C-1
(See Note 4)

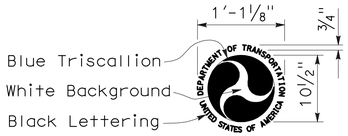

DETAIL D-1
(See Note 6)

NOTES:

1. The sign messages shown for type of project and fund types are examples only. See the Special Provisions for the applicable type of project and fund type messages to be used.
2. Except as otherwise shown, the legend of sign shall be black on a white background (non-reflective).
3. The border of the signs and details "B-1" and "B-2" shall be blue (non-reflective).
4. The diamond in details "C-1" and "C-2" shall be blue for the background of message, " SLOW FOR THE CONE ZONE", and white background for the orange cones. The color and type of font for the "SLOW FOR THE CONE ZONE" message shall be: "SLOW" white D; "FOR THE" white D; "CONE" orange Arial font; "ZONE" white Arial font.
5. Year of completion of project construction shown on the overlay is an example only. See the Special Provisions.
6. Use when the Project involves Federal Highway Trust Fund.

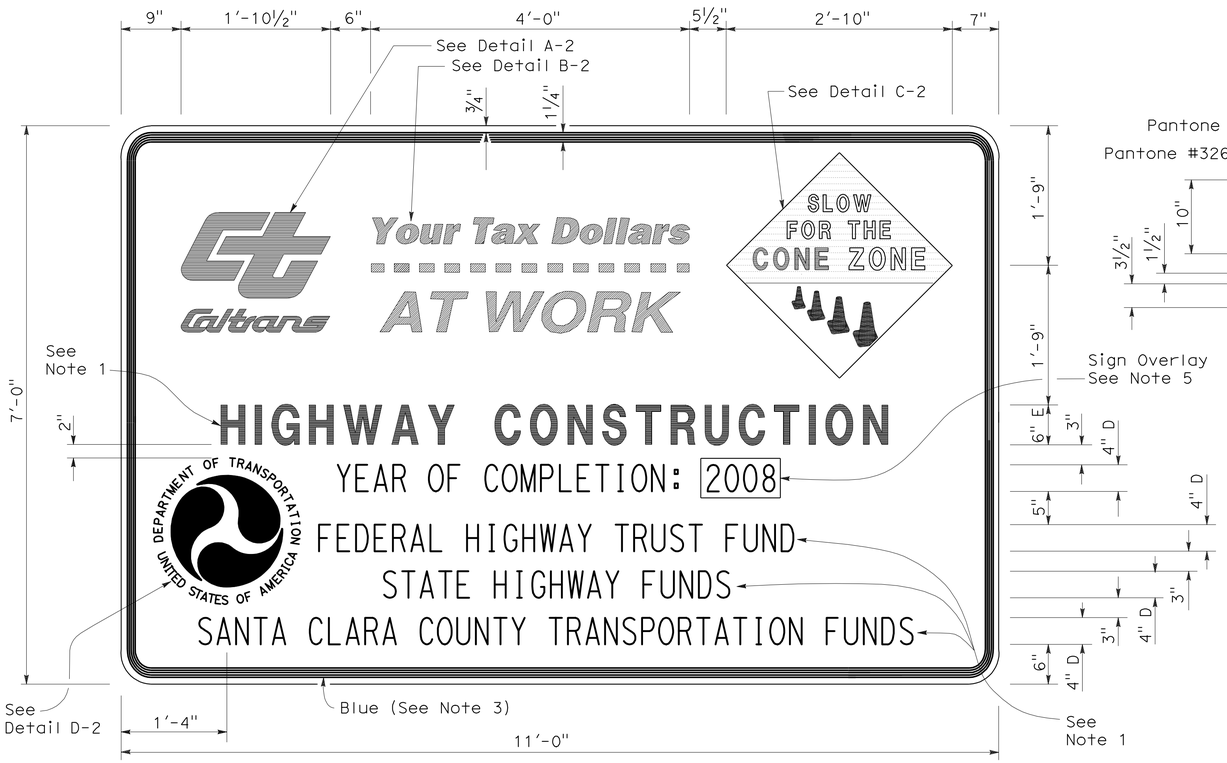

TYPE 2

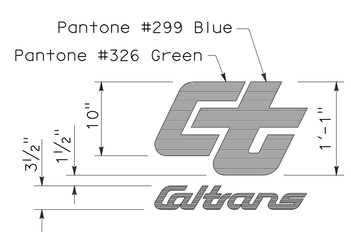

DETAIL A-2

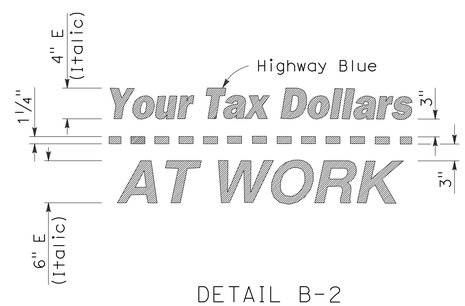

DETAIL B-2
(See Note 3)

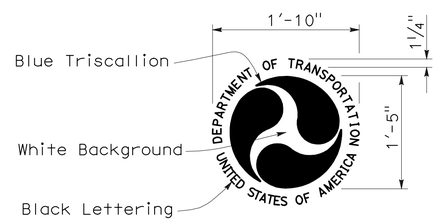

DETAIL D-2
(See Note 6)

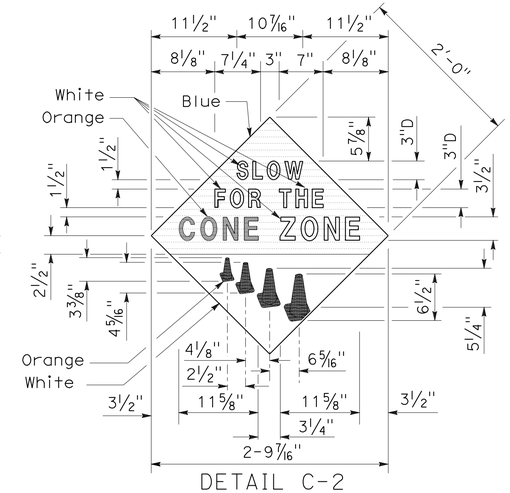

DETAIL C-2
(See Note 4)

STATE OF CALIFORNIA
DEPARTMENT OF TRANSPORTATION

CONSTRUCTION PROJECT FUNDING IDENTIFICATION SIGNS

NO SCALE

RSP T7 DATED NOVEMBER 17, 2006 SUPERSEDES STANDARD PLAN T7
DATED MAY 1, 2006 - PAGE 217 OF THE STANDARD PLANS BOOK DATED MAY 2006.

REVISED STANDARD PLAN RSP T7

2006 REVISED STANDARD PLAN RSP T7

9-7-06

DIST	COUNTY	ROUTE	POST MILES TOTAL PROJECT	SHEET NO.	TOTAL SHEETS
03	Pla	267	4.9/6.7	69	74

Robert B. Schott
LICENSED LANDSCAPE ARCHITECT

April 3, 2009
PLANS APPROVAL DATE

LICENSED LANDSCAPE ARCHITECT
Robert B. Schott 3635
Signature
11-30-10
Renewal Date
2-25-09
Date
STATE OF CALIFORNIA

The State of California or its officers or agents shall not be responsible for the accuracy or completeness of electronic copies of this plan sheet.

To accompany plans dated 4-12-10

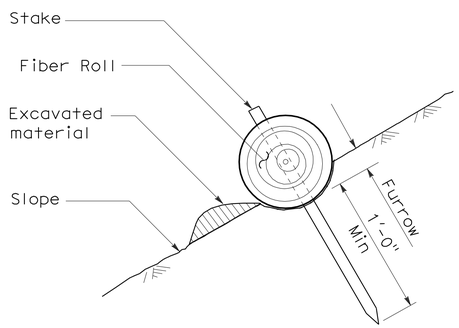

SECTION

TEMPORARY FIBER ROLL (TYPE 1)

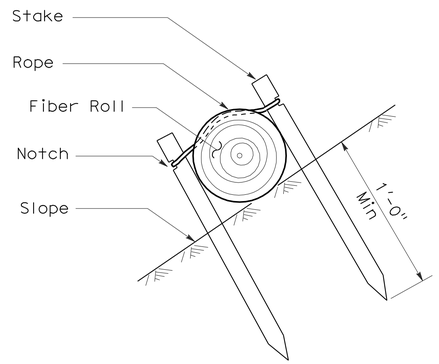

SECTION

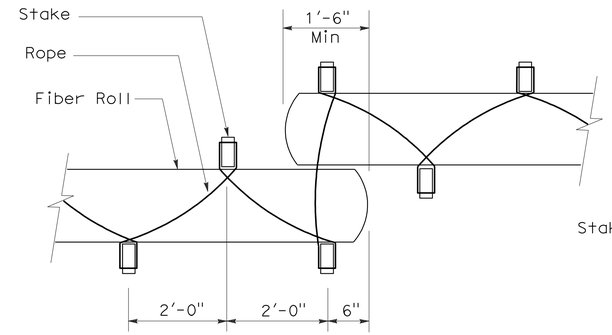

PLAN

TEMPORARY FIBER ROLL (TYPE 2)

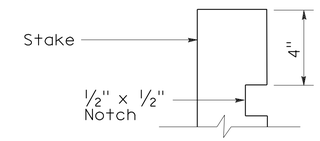

ELEVATION

STAKE NOTCH DETAIL

NOTES:

1. Temporary fiber roll spacing varies depending upon slope inclination.
2. Installations shown in the perspectives are for slope inclination of 10:1 and steeper.

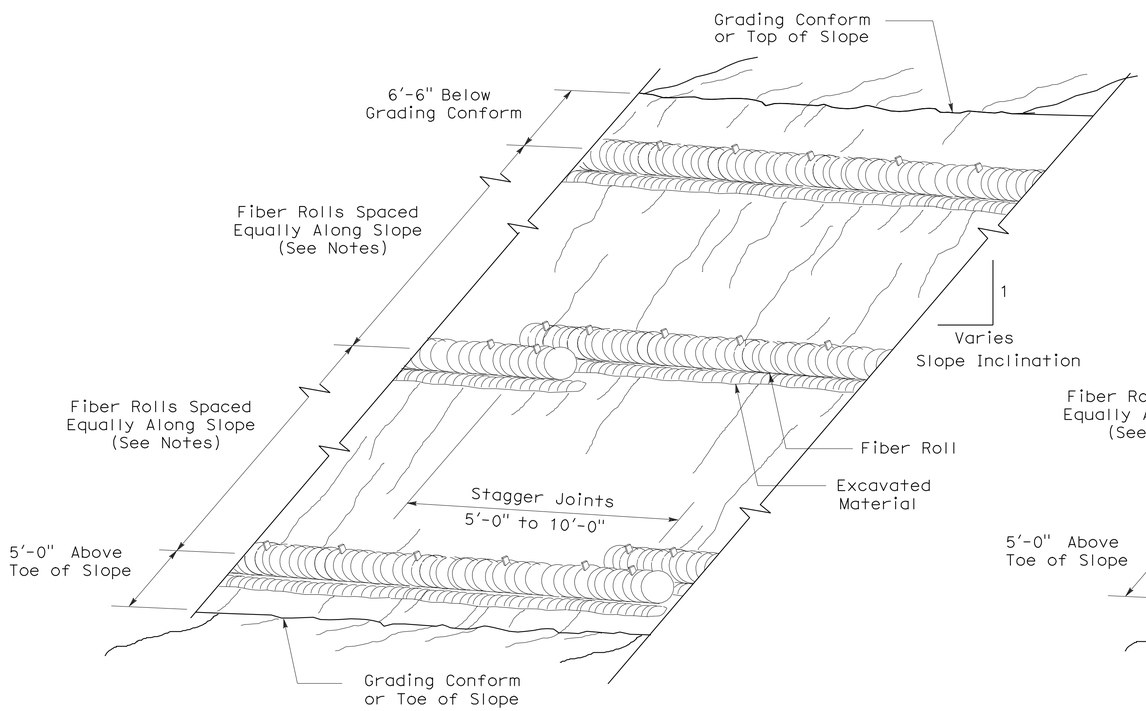

PERSPECTIVE

TEMPORARY FIBER ROLL (TYPE 1)

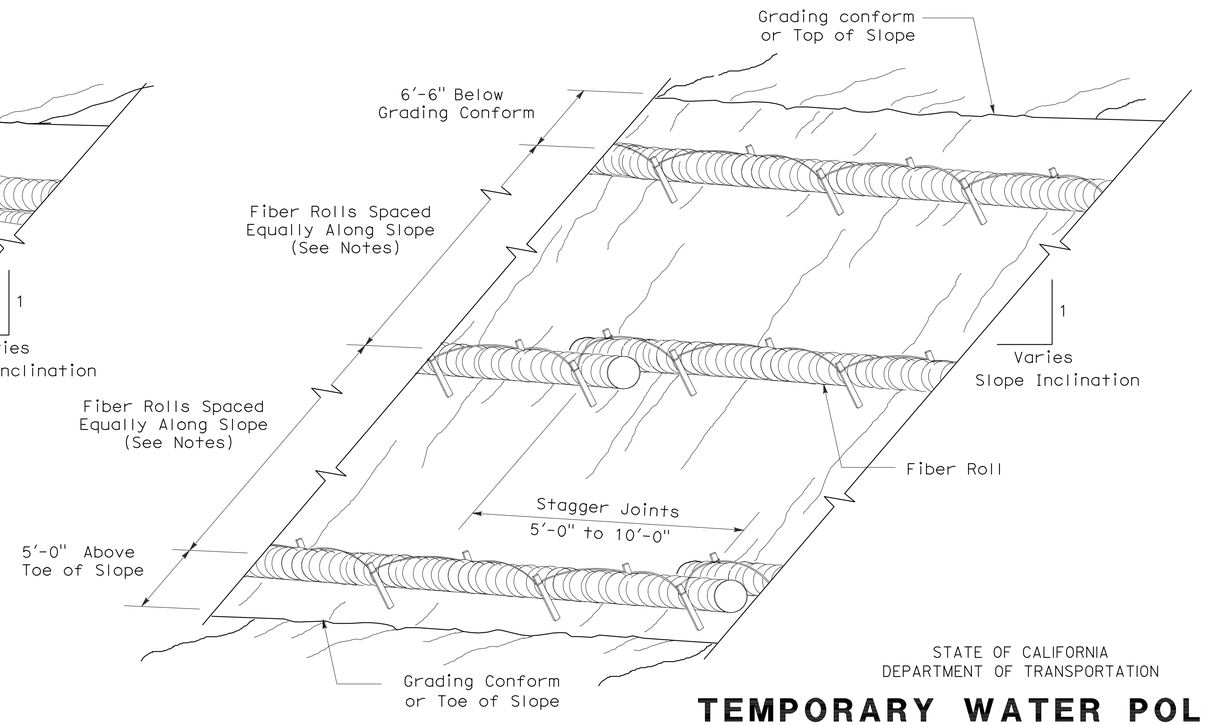

PERSPECTIVE

TEMPORARY FIBER ROLL (TYPE 2)

STATE OF CALIFORNIA
DEPARTMENT OF TRANSPORTATION

TEMPORARY WATER POLLUTION CONTROL DETAILS (TEMPORARY FIBER ROLL)

NO SCALE

RSP T56 DATED APRIL 3, 2009 SUPERSEDES STANDARD PLAN T56
DATED MAY 1, 2006 - PAGE 232 OF THE STANDARD PLANS BOOK DATED MAY 2006.

REVISED STANDARD PLAN RSP T56

2006 REVISED STANDARD PLAN RSP T56

2-23-09

DIST	COUNTY	ROUTE	POST MILES TOTAL PROJECT	SHEET NO.	TOTAL SHEETS
03	Pla	267	4.9/6.7	70	74

Robert B Schott
LICENSED LANDSCAPE ARCHITECT

August 15, 2008
PLANS Approval DATE

LICENSED LANDSCAPE ARCHITECT
Robert B. Schott 3025
Robert B Schott
Signature
11-04-08
Renewal Date
08-11-08
Date
STATE OF CALIFORNIA

The State of California or its officers or agents shall not be responsible for the accuracy or completeness of electronic copies of this plan sheet.

To accompany plans dated 4-12-10

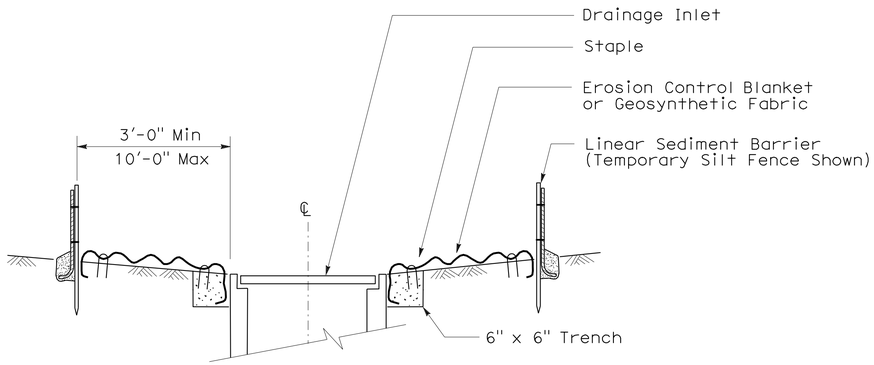

SECTION A-A

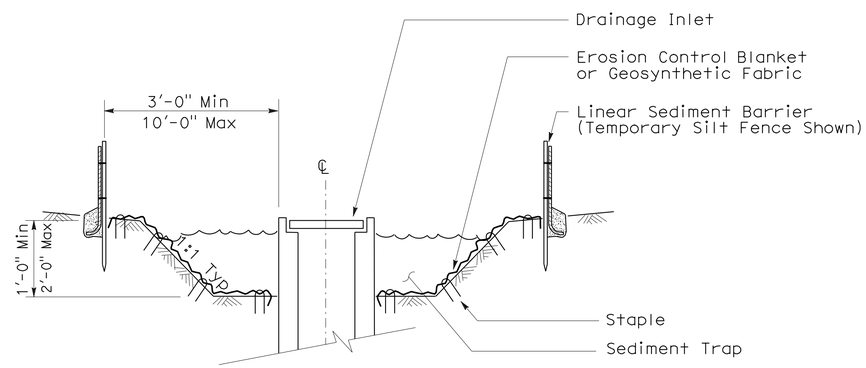

SECTION B-B

NOTES:

1. See Standard Plan T51 for Temporary Silt Fence.
2. Dimensions may vary to fit field conditions.

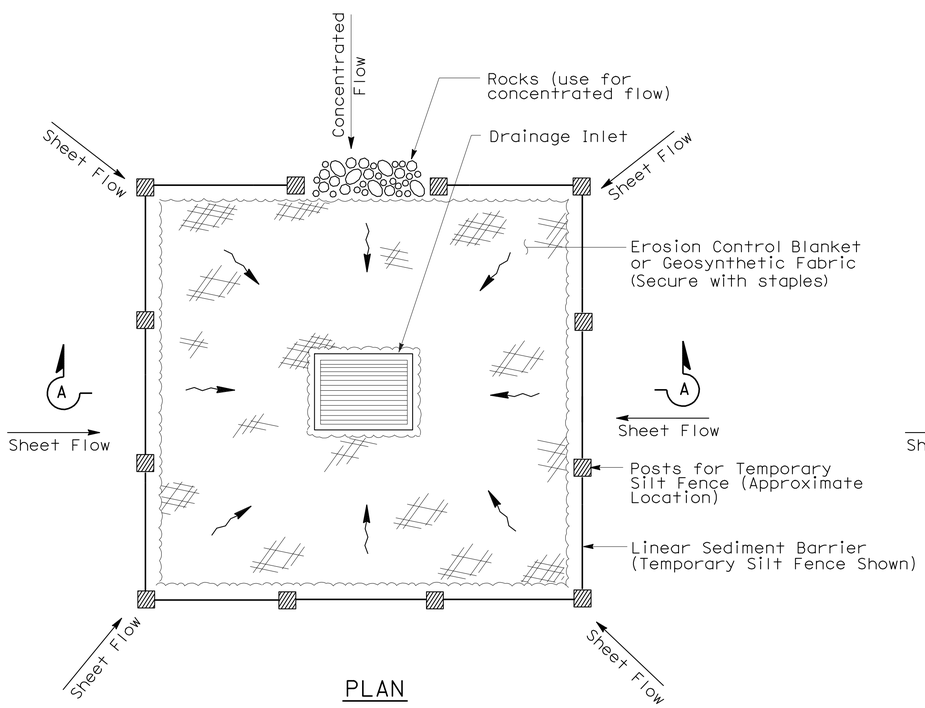

PLAN

TEMPORARY DRAINAGE
INLET PROTECTION (TYPE 1)

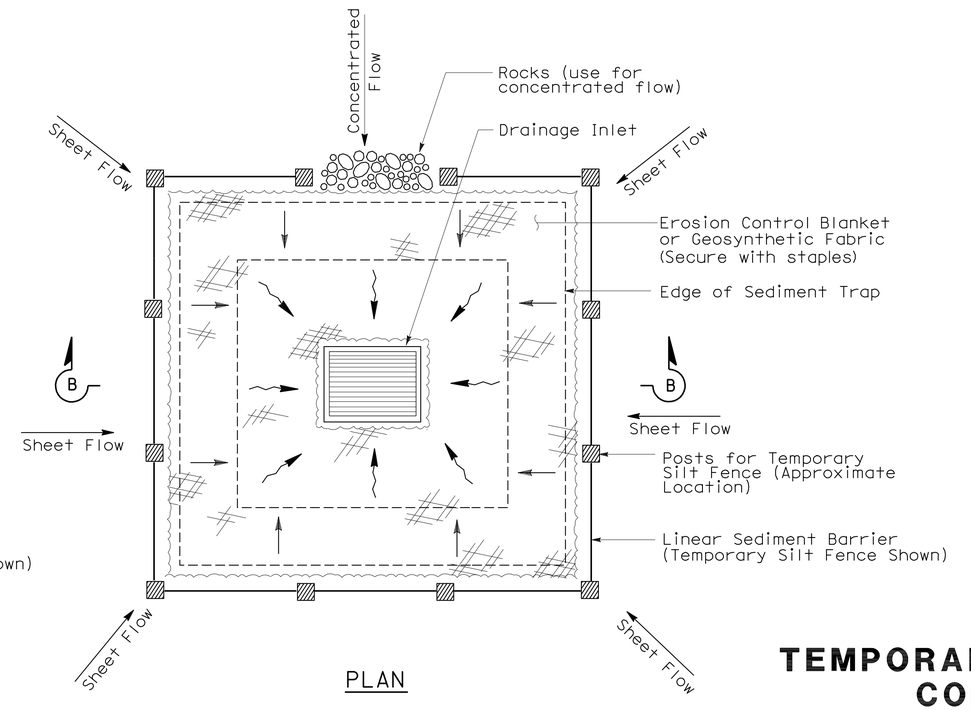

PLAN

TEMPORARY DRAINAGE
INLET PROTECTION (TYPE 2)
(EXCAVATED SEDIMENT TRAP)

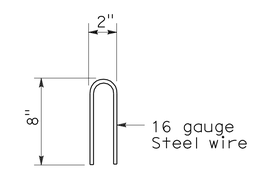

STAPLE DETAIL

STATE OF CALIFORNIA
DEPARTMENT OF TRANSPORTATION

TEMPORARY WATER POLLUTION CONTROL DETAILS (TEMPORARY DRAINAGE INLET PROTECTION)

NO SCALE

NSP T61 DATED AUGUST 15, 2008 SUPPLEMENTS
THE STANDARD PLANS BOOK DATED MAY 2006.

NEW STANDARD PLAN NSP T61

2006 NEW STANDARD PLAN NSP T61

7-11-08

DIST	COUNTY	ROUTE	POST MILES TOTAL PROJECT	SHEET NO.	TOTAL SHEETS
03	Pla	267	4.9/6.7	71	74

LICENSED LANDSCAPE ARCHITECT

August 15, 2008
PLANS APPROVAL DATE

The State of California or its officers or agents shall not be responsible for the accuracy or completeness of electronic copies of this plan sheet.

LICENSED LANDSCAPE ARCHITECT — Robert B. Schott — Signature — 11-04-08 Renewal Date — 08-11-08 Date — STATE OF CALIFORNIA

To accompany plans dated 4-12-10

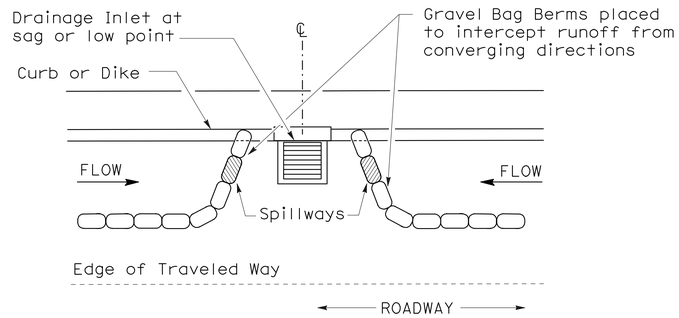

PLAN

CONFIGURATION FOR SAG POINT INLET (GRAVEL BAG BERM)

GRAVEL BAG BERM (TYPE 3A) SPACING TABLE

SLOPE OF ROADWAY (PERCENT)	1 to 3.9	4 to 5.9	6 to 7.9	8 to 10	10+
INTERVAL BETWEEN BERM	100′	75′	50′	25′	12′

For slope of less than 1%, install barriers only if erosion/sediment is prevalent

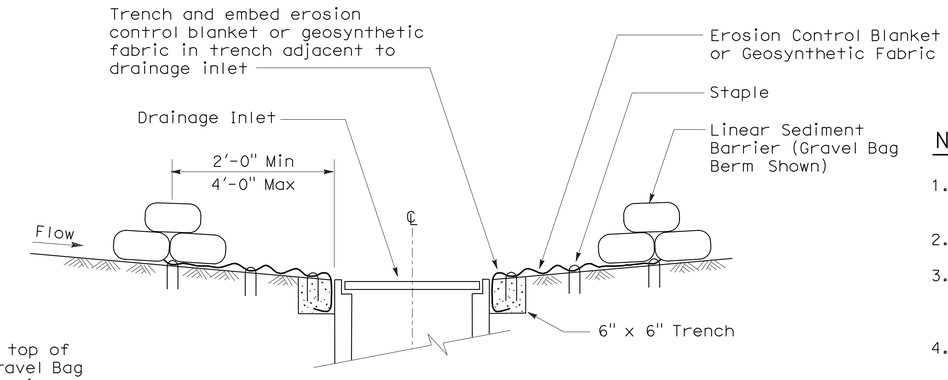

SECTION A-A

NOTES:

1. Place safety cones adjacent to drainage inlet protection.
2. Dimensions may vary to fit field conditions.
3. Install a minimum of 3 gravel bag berms upstream of each drainage inlet to be protected.
4. Position erosion control blanket or geosynthetic fabric at edge of concrete apron and secure in trench.
5. Erosion control blanket or geosynthetic fabric is not required if the area adjacent to the drainage inlet is vegetated or paved.

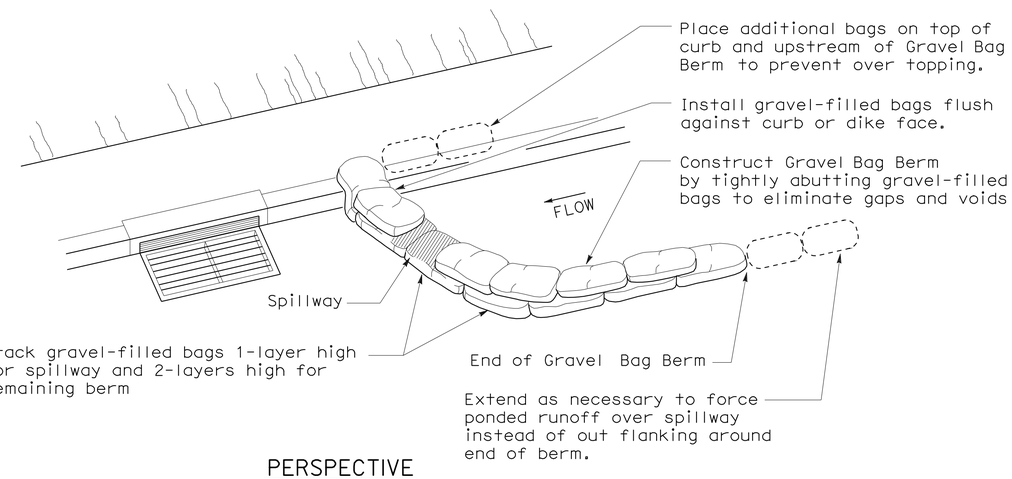

PERSPECTIVE

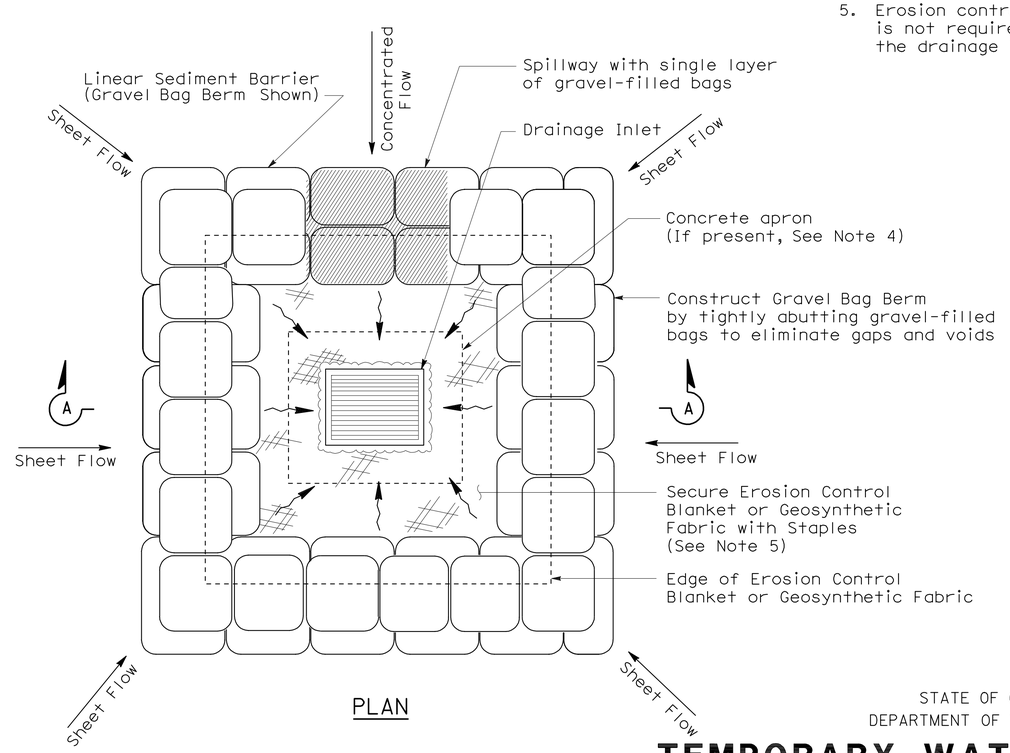

PLAN

TEMPORARY DRAINAGE INLET PROTECTION (TYPE 3B)

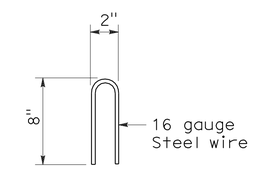

STAPLE DETAIL

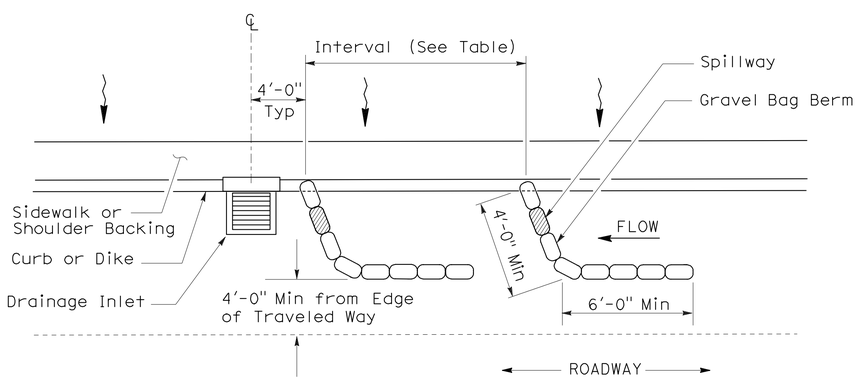

PLAN

TEMPORARY DRAINAGE INLET PROTECTION (TYPE 3A) (GRAVEL BAG BERM)

STATE OF CALIFORNIA
DEPARTMENT OF TRANSPORTATION

TEMPORARY WATER POLLUTION CONTROL DETAILS (TEMPORARY DRAINAGE INLET PROTECTION)

NO SCALE

NSP T62 DATED AUGUST 15, 2008 SUPPLEMENTS THE STANDARD PLANS BOOK DATED MAY 2006.

NEW STANDARD PLAN NSP T62

2006 NEW STANDARD PLAN NSP T62

7-11-08

DIST	COUNTY	ROUTE	POST MILES TOTAL PROJECT	SHEET NO.	TOTAL SHEETS
03	Pla	267	4.9/6.7	72	74

Robert B Schott
LICENSED LANDSCAPE ARCHITECT

August 15, 2008
PLANS APPROVAL DATE

LICENSED LANDSCAPE ARCHITECT Robert B. Schott 3025 Signature 11-04-08 Renewal Date 08-11-08 Date STATE OF CALIFORNIA

The State of California or its officers or agents shall not be responsible for the accuracy or completeness of electronic copies of this plan sheet.

To accompany plans dated 4-12-10

FLEXIBLE SEDIMENT BARRIER SPACING TABLE

SLOPE OF ROADWAY (PERCENT)	0 to 0.9	1 to 1.9	2 to 2.9	3 to 4	5+
INTERVAL BETWEEN BARRIERS	50′	35′	30′	25′	20′
ANGLE FROM FACE OF CURB	70°	70°	70°	45°	45°
SUGGESTED BARRIER LENGTH	6′	6′	6′	6′	6′

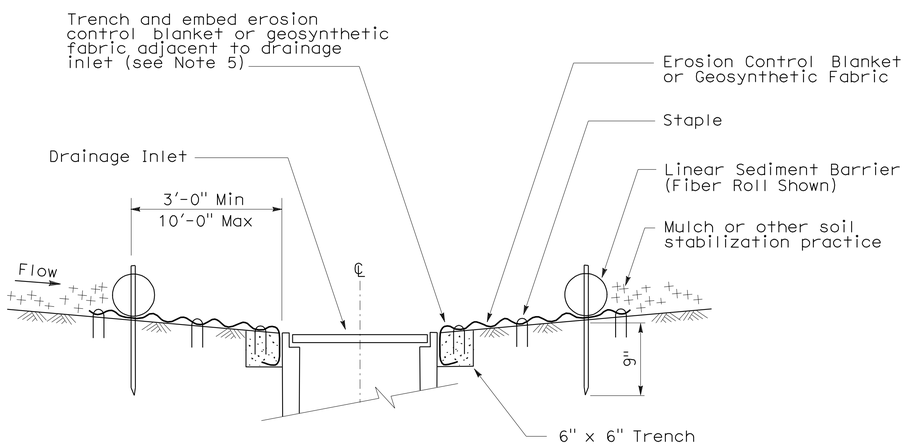

SECTION A-A

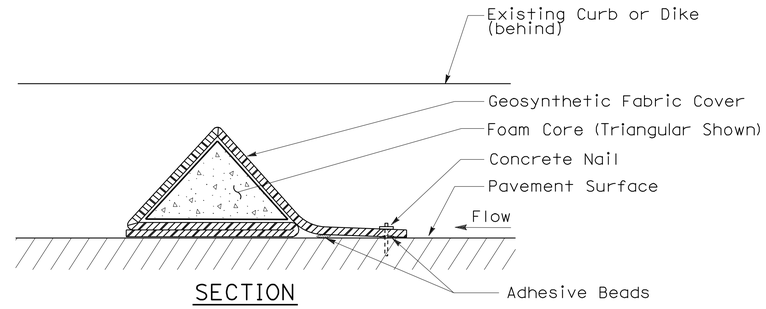

SECTION

FLEXIBLE SEDIMENT BARRIER DETAIL (FOAM BARRIER SHOWN)

NOTES:

1. See Standard Plan T51 for Temporary Silt Fence.
2. Dimensions may vary to fit field conditions.
3. Install a minimum of 3 flexible sediment barriers upstream of each drainage inlet to be protected.
4. Position erosion control blanket or geosynthetic fabric at edge of concrete apron and secure in trench.
5. Erosion control blanket or geosynthetic fabric is not required if the area adjacent to the drainage inlet is vegetated.

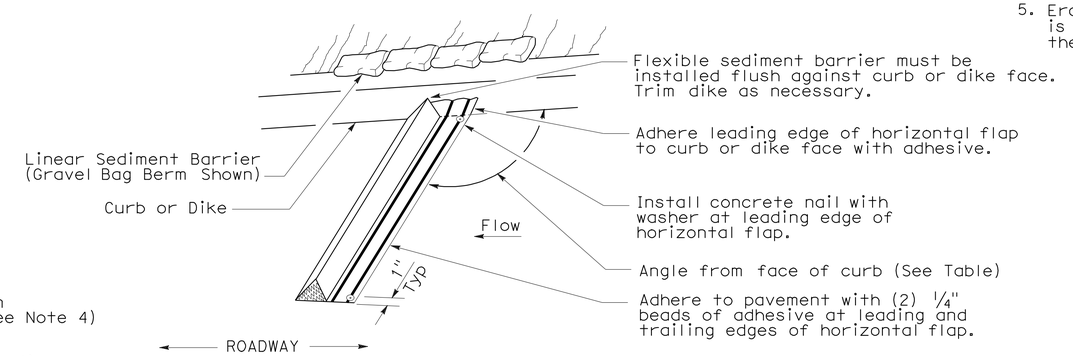

PERSPECTIVE

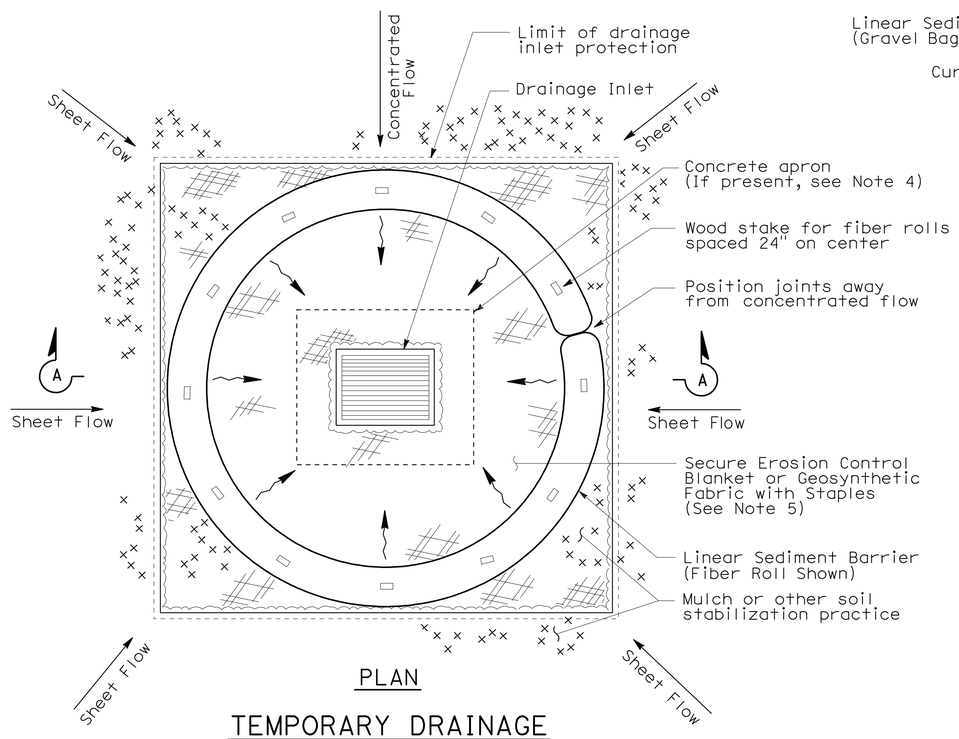

PLAN

TEMPORARY DRAINAGE INLET PROTECTION (TYPE 4A)

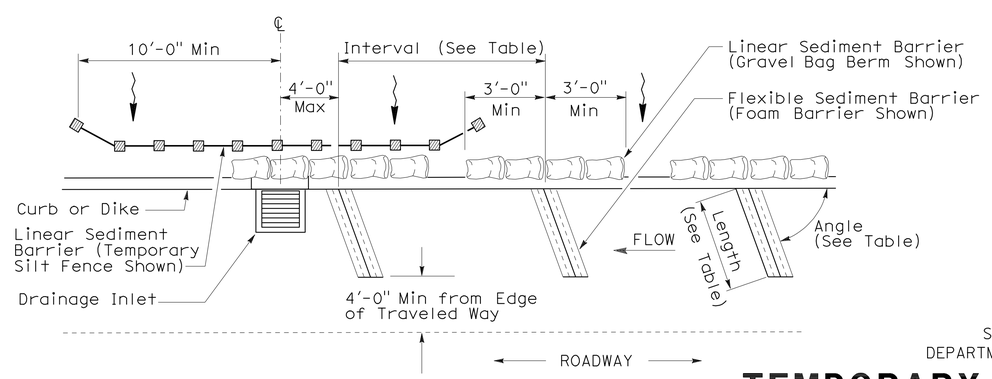

PLAN

TEMPORARY DRAINAGE INLET PROTECTION (TYPE 4B) FLEXIBLE SEDIMENT BARRIER

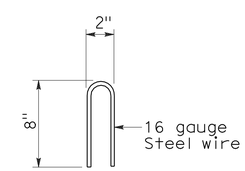

STAPLE DETAIL

STATE OF CALIFORNIA
DEPARTMENT OF TRANSPORTATION

TEMPORARY WATER POLLUTION CONTROL DETAILS (TEMPORARY DRAINAGE INLET PROTECTION)

NO SCALE

NSP T63 DATED AUGUST 15, 2008 SUPPLEMENTS THE STANDARD PLANS BOOK DATED MAY 2006.

NEW STANDARD PLAN NSP T63

2006 NEW STANDARD PLAN NSP T63

7-11-08

DIST	COUNTY	ROUTE	POST MILES TOTAL PROJECT	SHEET NO.	TOTAL SHEETS
03	Pla	267	4.9/6.7	73	74

LICENSED LANDSCAPE ARCHITECT

August 15, 2008
PLANS APPROVAL DATE

LICENSED LANDSCAPE ARCHITECT
Robert B. Schott 3025
Signature
11-04-08
Renewal Date
08-11-08
Date
STATE OF CALIFORNIA

The State of California or its officers or agents shall not be responsible for the accuracy or completeness of electronic copies of this plan sheet.

To accompany plans dated 4-12-10

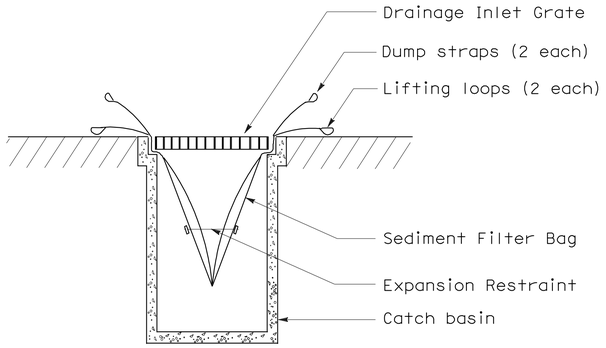

SECTION B-B

SEDIMENT FILTER BAG DETAIL

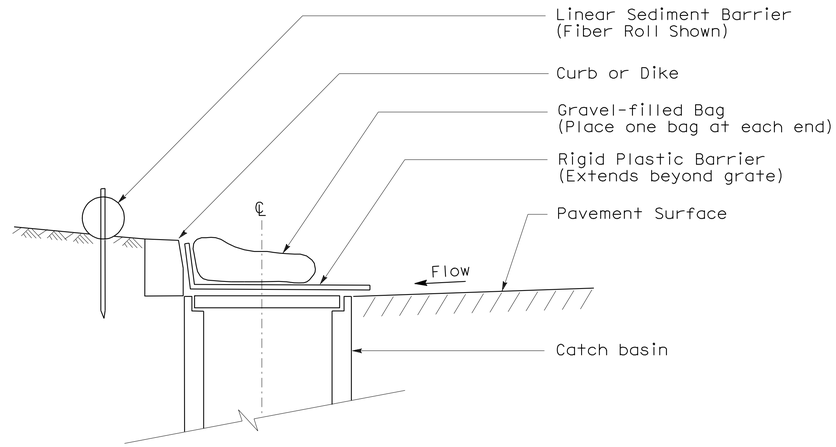

SECTION

TEMPORARY DRAINAGE INLET PROTECTION (TYPE 6A) (CATCH BASIN WITH GRATE)

NOTES:

1. See Standard Plan T51 for Temporary Silt Fence.
2. Dimensions may vary to fit field conditions.

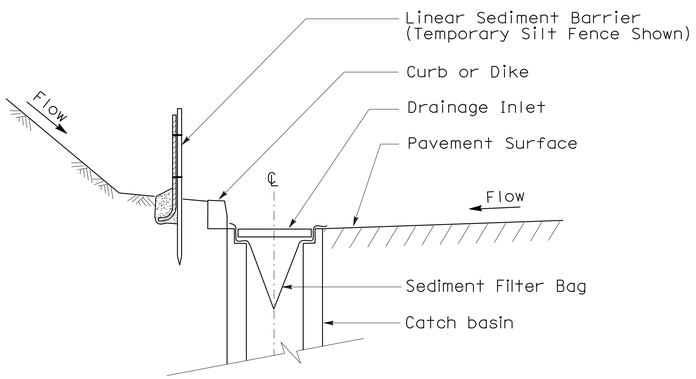

SECTION A-A

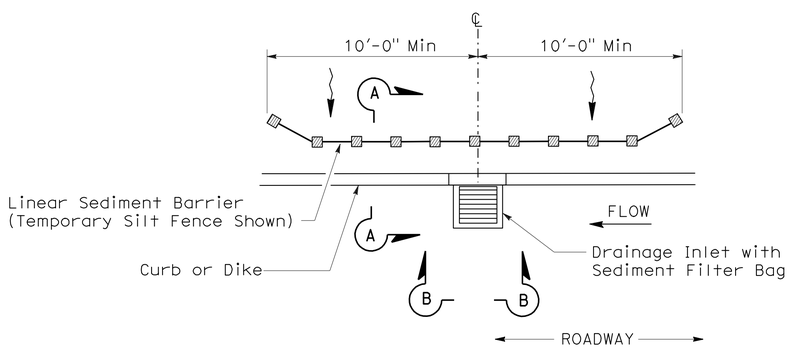

PLAN

TEMPORARY DRAINAGE INLET PROTECTION (TYPE 5) (SEDIMENT FILTER BAG)

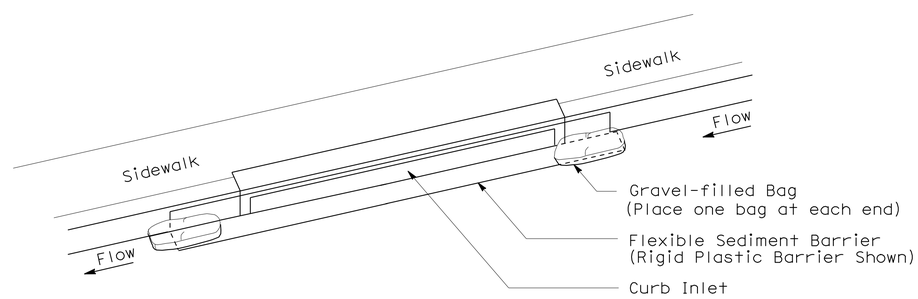

PERSPECTIVE

TEMPORARY DRAINAGE INLET PROTECTION (TYPE 6B) (CURB INLET WITHOUT GRATE)

STATE OF CALIFORNIA
DEPARTMENT OF TRANSPORTATION

TEMPORARY WATER POLLUTION CONTROL DETAILS (TEMPORARY DRAINAGE INLET PROTECTION)

NO SCALE

NSP T64 DATED AUGUST 15, 2008 SUPPLEMENTS
THE STANDARD PLANS BOOK DATED MAY 2006.

NEW STANDARD PLAN NSP T64

2006 NEW STANDARD PLAN NSP T64

7-11-08

DIST	COUNTY	ROUTE	POST MILES TOTAL PROJECT	SHEET NO.	TOTAL SHEETS
03	Pla	267	4.9/6.7	74	74

Robert B Schott
LICENSED LANDSCAPE ARCHITECT

April 3, 2009
PLANS APPROVAL DATE

LICENSED LANDSCAPE ARCHITECT
Robert B. Schott 3025
Robert B Schott
Signature
11-30-10
Renewal Date
2-25-09
Date
STATE OF CALIFORNIA

The State of California or its officers or agents shall not be responsible for the accuracy or completeness of electronic copies of this plan sheet.

To accompany plans dated 4-12-10

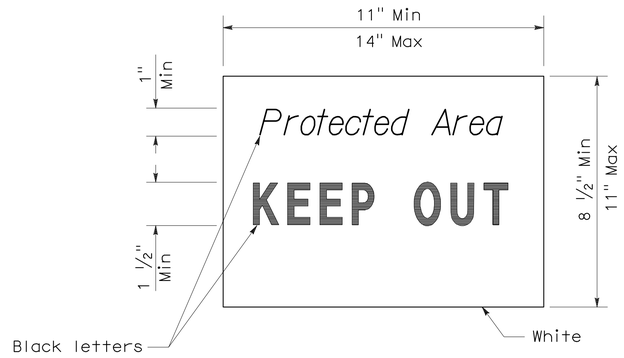

SIGN DETAIL

NOTE:

1. Temporary silt fence and temporary straw bale barrier shown for reference purposes only.

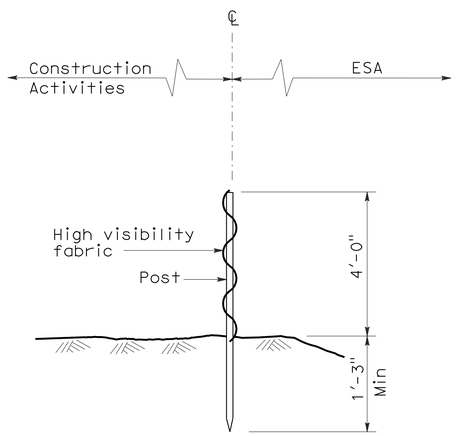

SECTION
TEMPORARY FENCE (TYPE ESA)

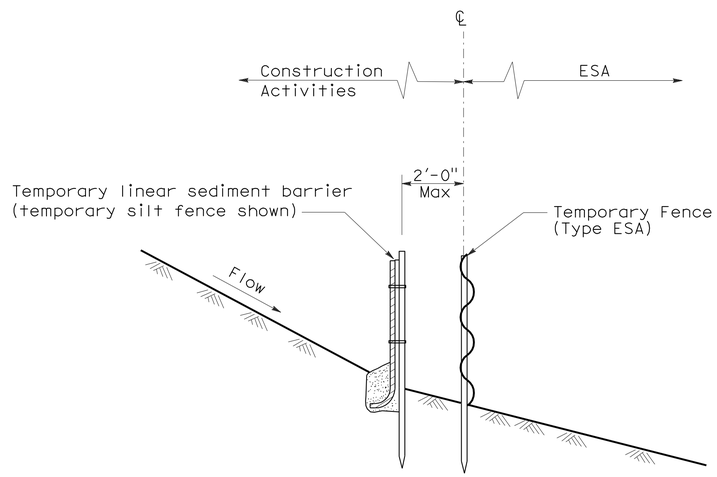

SECTION
PLACEMENT DETAIL
FOR TEMPORARY LINEAR SEDIMENT BARRIER
USED WITH TEMPORARY
FENCE (TYPE ESA)
(See Note 1)

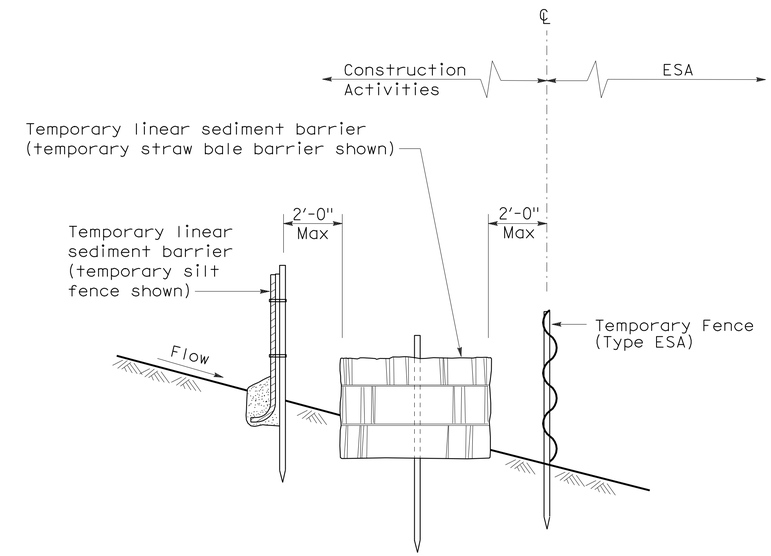

SECTION
PLACEMENT DETAIL
FOR TEMPORARY SILT FENCE
AND TEMPORARY STRAW BALE BARRIER
USED WITH TEMPORARY FENCE (TYPE ESA)
(See Note 1)

STATE OF CALIFORNIA
DEPARTMENT OF TRANSPORTATION

TEMPORARY WATER POLLUTION CONTROL DETAILS [TEMPORARY FENCE (TYPE ESA)]

NO SCALE

NSP T65 DATED APRIL 3, 2009 SUPPLEMENTS
THE STANDARD PLANS BOOK DATED MAY 2006.

NEW STANDARD PLAN NSP T65

2006 NEW STANDARD PLAN NSP T65