HSNH-X067(070)

Dist	COUNTY	ROUTE	POST MILES TOTAL PROJECT	SHEET No.	TOTAL SHEETS
03	Sac	50,51,80, 99,104	Var	1	26

STATE OF CALIFORNIA
DEPARTMENT OF TRANSPORTATION

PROJECT PLANS FOR CONSTRUCTION ON
STATE HIGHWAY

IN SACRAMENTO COUNTY
AT
VARIOUS LOCATIONS

TO BE SUPPLEMENTED BY STANDARD PLANS DATED MAY 2006

INDEX OF PLANS

SHEET No.	DESCRIPTION
1	TITLE AND LOCATION MAP
2-3	TYPICAL CROSS SECTIONS
4-6	CONSTRUCTION DETAILS
7-9	CONSTRUCTION AREA SIGNS
10-14	DETOUR PLAN
15	SUMMARY OF QUANTITIES
16	ELECTRICAL PLAN
17-23	REVISED STANDARD PLANS
STRUCTURE PLANS	
24-26	ROUTE 50 AND 51 BRIDGES

THE STANDARD PLANS LIST APPLICABLE TO THIS CONTRACT IS INCLUDED IN THE NOTICE TO BIDDERS AND SPECIAL PROVISIONS BOOK.

LOCATION MAP

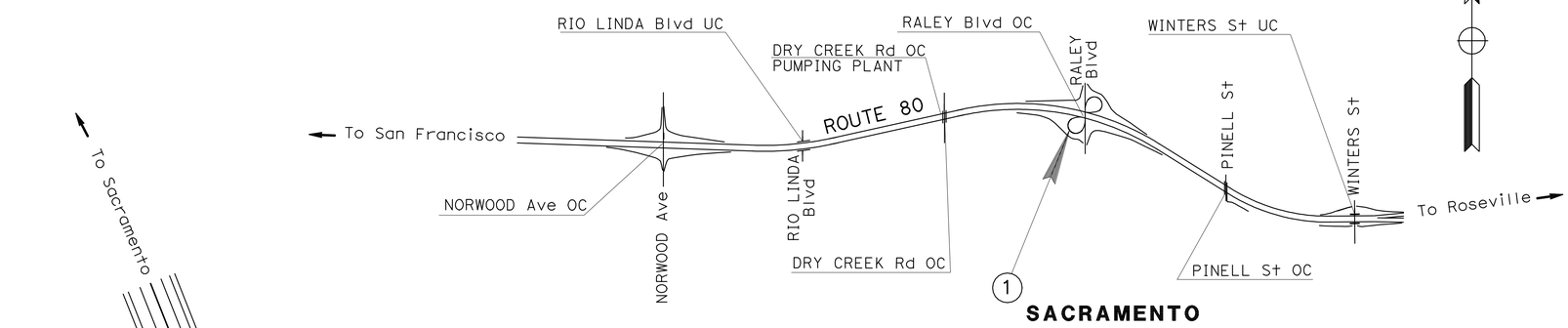

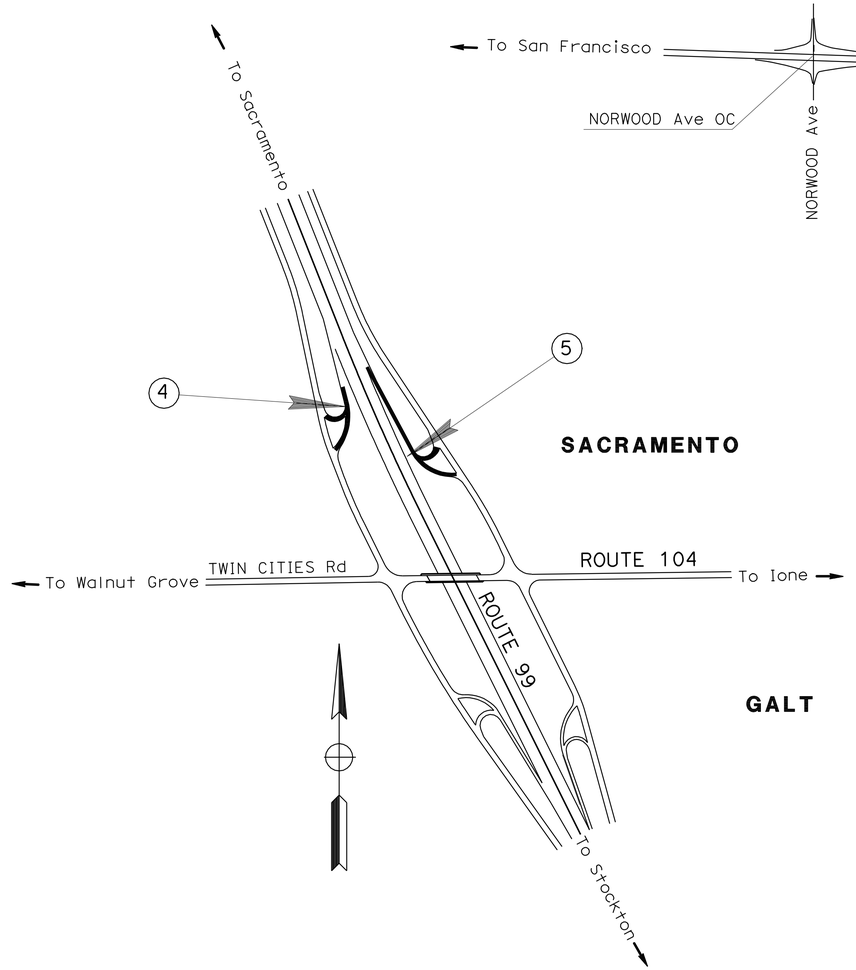

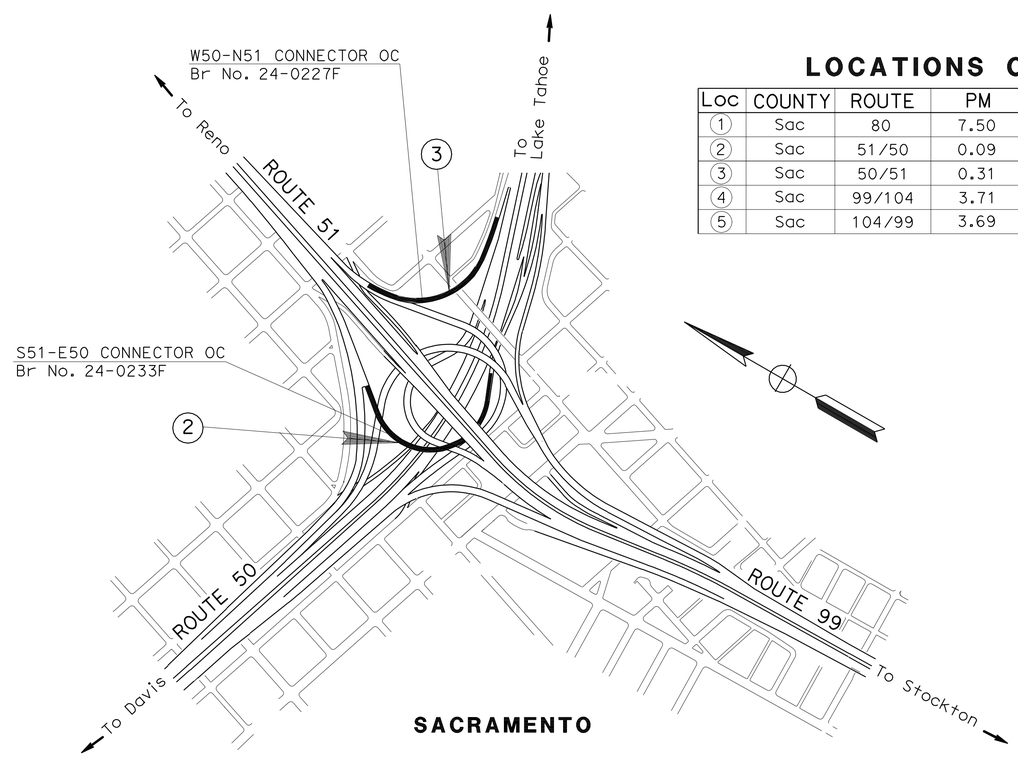

LOCATIONS OF CONSTRUCTION

Loc	COUNTY	ROUTE	PM	DESCRIPTION
1	Sac	80	7.50	SB RALEY Blvd TO EB INTERSTATE 80 ON-RAMP
2	Sac	51/50	0.09	CONNECTOR FROM SB SR 51 TO EB U.S. 50
3	Sac	50/51	0.31	CONNECTOR FROM WB U.S. 50 TO NB SR 51
4	Sac	99/104	3.71	SB OFF-RAMP FROM SR 99 TO SR 104
5	Sac	104/99	3.69	NB ON-RAMP FROM SR 104 TO SR 99

THE CONTRACTOR SHALL POSSESS THE CLASS (OR CLASSES) OF LICENSE AS SPECIFIED IN THE "NOTICE TO BIDDERS."

NO SCALE

PROJECT MANAGER: SERGIO ACEVES
DESIGN ENGINEER: ERIC Y. WONG

PROJECT ENGINEER REGISTERED CIVIL ENGINEER — DATE 9-30-09

October 19, 2009
PLANS APPROVAL DATE

REGISTERED PROFESSIONAL ENGINEER — AI K. TRAN — No. C64269 — Exp. 06-30-11 — CIVIL — STATE OF CALIFORNIA

THE STATE OF CALIFORNIA OR ITS OFFICERS OR AGENTS SHALL NOT BE RESPONSIBLE FOR THE ACCURACY OR COMPLETENESS OF SCANNED COPIES OF THIS PLAN SHEET.

CONTRACT No. **03-0F5204**

LAST REVISION 00-00-00 — DATE PLOTTED => 22-DEC-2009 — TIME PLOTTED => 08:54

Dist	COUNTY	ROUTE	POST MILES TOTAL PROJECT	SHEET No.	TOTAL SHEETS
03	Sac	50,51,80 99,104	Var	2	26

REGISTERED CIVIL ENGINEER 9-30-09 DATE

10-19-09
PLANS APPROVAL DATE

REGISTERED PROFESSIONAL ENGINEER AI K. TRAN No. C64269 Exp. 06-30-11 CIVIL STATE OF CALIFORNIA

THE STATE OF CALIFORNIA OR ITS OFFICERS OR AGENTS SHALL NOT BE RESPONSIBLE FOR THE ACCURACY OR COMPLETENESS OF SCANNED COPIES OF THIS PLAN SHEET.

NOTES:

1. DIMENSIONS OF THE PAVEMENT STRUCTURES (STRUCTURAL SECTIONS) ARE SUBJECT TO TOLERANCES SPECIFIED IN THE STANDARD SPECIFICATIONS.
2. SUPERELEVATION AS SHOWN OR AS DIRECTED BY THE ENGINEER.
4. EXISTING UTILITY FACILITIES HAVE NOT BEEN PLOTTED ON THESE PLANS.
5. FOR HMA CONFORM DETAILS, SEE CONSTRUCTION DETAIL SHEETS.

LEGEND

1	COLD PLANE ASPHALT CONCRETE PAVEMENT (0.10′ Max) REPLACE 0.10′ HMA-O
2	OVERLAY 0.10′ HMA-O

ABBREVIATIONS

LL	LANE LINE
SR	STATE ROUTE
UB	UNTREATED BASE
ISM	IMPORTED SUBBASE MATERIAL
HMA-O	HOT MIX ASPHALT (OPEN GRADED)

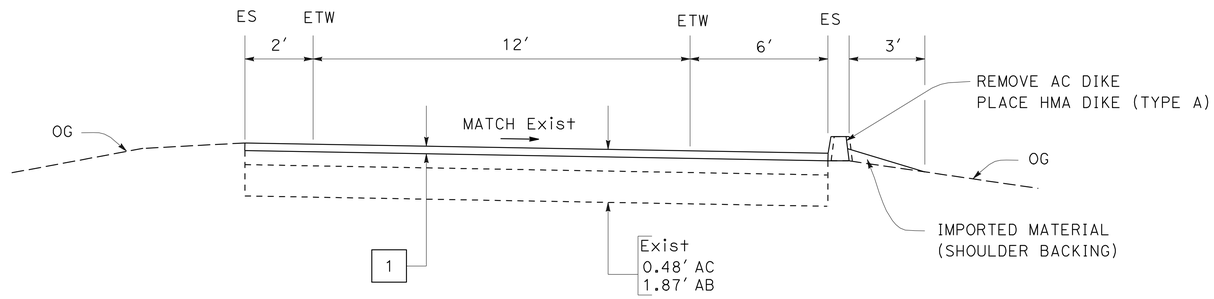

SB RALEY BLVD TO EB INTERSTATE 80 ON-RAMP
(LOCATION 1)

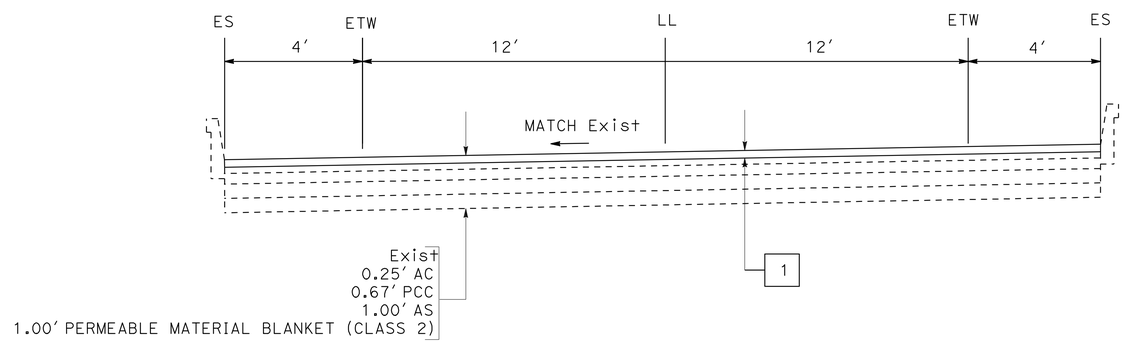

CONNECTOR RAMP FROM SB SR 51 TO EB U.S 50
(LOCATION 2)

TYPICAL CROSS SECTION

NO SCALE

X-1

REVISED BY | DATE REVISED
AI K. TRAN
CALCULATED-DESIGNED BY | CHECKED BY
FUNCTIONAL SUPERVISOR
ERIC Y. WONG

STATE OF CALIFORNIA - DEPARTMENT OF TRANSPORTATION
Caltrans
NORTH REGION
OFFICE OF DESIGN, SOUTH
DESIGN BRANCH 00

13:35 21-OCT-2009 trrichf R:\PSE\03-0F5201\30f520ca001.dgn

LAST REVISION 00-00-00 | DATE PLOTTED => 21-OCT-2009 | TIME PLOTTED => 13:35

Dist	COUNTY	ROUTE	POST MILES TOTAL PROJECT	SHEET No.	TOTAL SHEETS
03	Sac	50,51,80 99,104	Var	3	26

REGISTERED CIVIL ENGINEER 9-30-09 DATE

10-19-09
PLANS APPROVAL DATE

REGISTERED PROFESSIONAL ENGINEER AI K. TRAN No. C64269 Exp. 06-30-11 CIVIL STATE OF CALIFORNIA

THE STATE OF CALIFORNIA OR ITS OFFICERS OR AGENTS SHALL NOT BE RESPONSIBLE FOR THE ACCURACY OR COMPLETENESS OF SCANNED COPIES OF THIS PLAN SHEET.

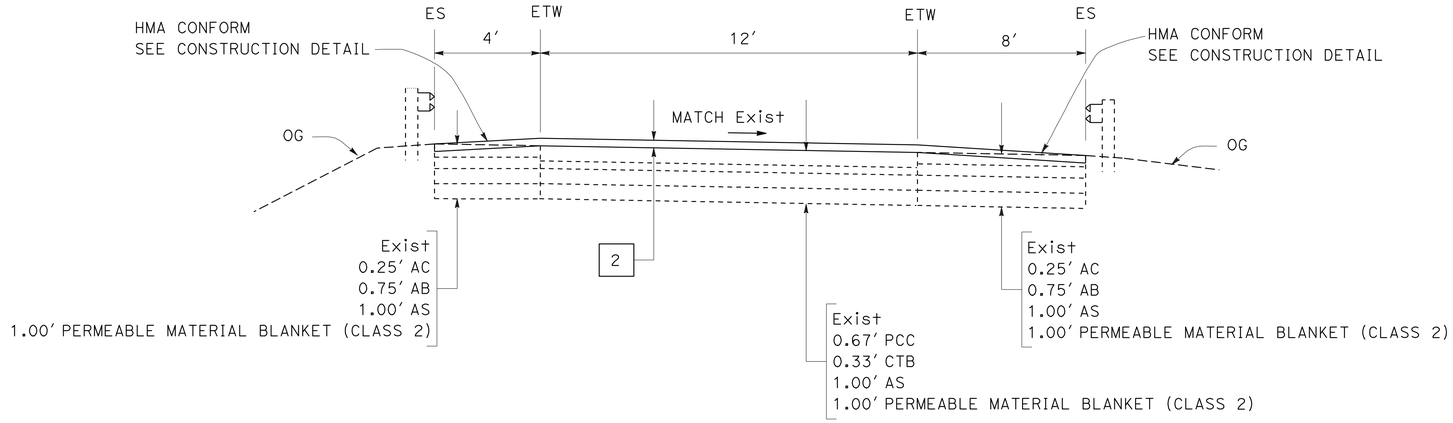

CONNECTOR RAMP FROM WB SR 50 TO NB SR 51 (LOCATION 3)

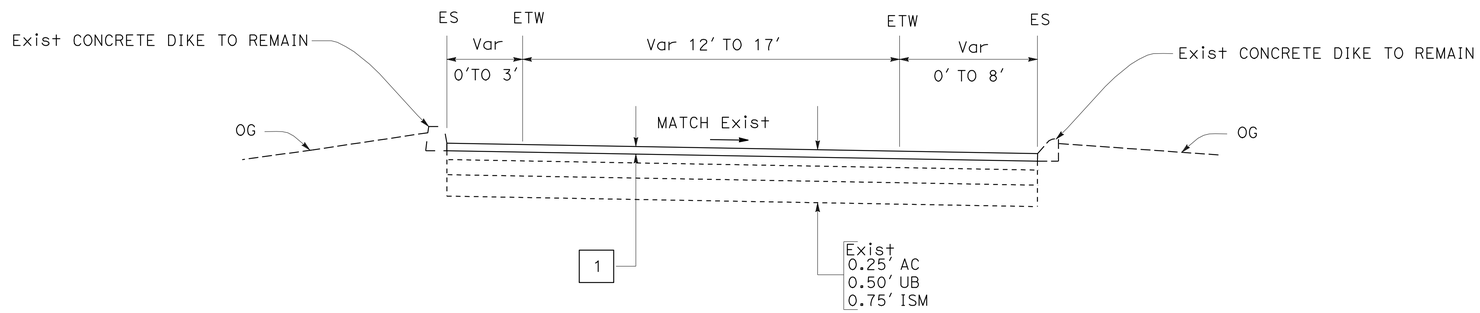

SB OFF-RAMP FROM SR 99 TO SR 104 (LOCATION 4)

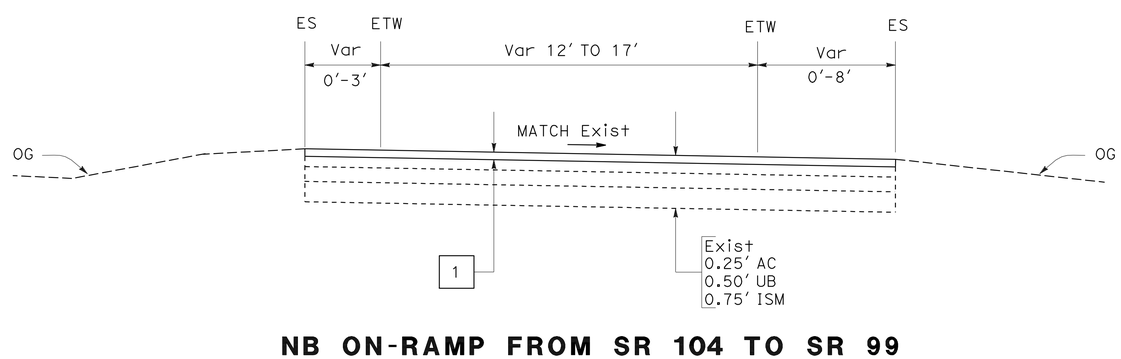

NB ON-RAMP FROM SR 104 TO SR 99 (LOCATION 5)

TYPICAL CROSS SECTION

NO SCALE

X-2

REVISED BY	DATE REVISED

CALCULATED-DESIGNED BY: AI K. TRAN
CHECKED BY:
FUNCTIONAL SUPERVISOR: ERIC Y. WONG

STATE OF CALIFORNIA - DEPARTMENT OF TRANSPORTATION
Caltrans
NORTH REGION
OFFICE OF DESIGN, SOUTH
DESIGN BRANCH 00

13:36 21-OCT-2009 trrichf R:\PSE\03-0f5201\30f520ca002.dgn

LAST REVISION 00-00-00 | DATE PLOTTED => 21-OCT-2009 | TIME PLOTTED => 13:36

Dist	COUNTY	ROUTE	POST MILES TOTAL PROJECT	SHEET No.	TOTAL SHEETS
03	Sac	50,51,80 99,104	Var	4	26

REGISTERED CIVIL ENGINEER 9-30-09 DATE

10-19-09
PLANS APPROVAL DATE

REGISTERED PROFESSIONAL ENGINEER AI K. TRAN No. C64269 Exp. 06-30-11 CIVIL STATE OF CALIFORNIA

THE STATE OF CALIFORNIA OR ITS OFFICERS OR AGENTS SHALL NOT BE RESPONSIBLE FOR THE ACCURACY OR COMPLETENESS OF SCANNED COPIES OF THIS PLAN SHEET.

LEGEND:

COLD PLANE ASPHALT CONCRETE PAVEMENT (0.10′ Max)
REPLACE 0.10′ HMA-O

GRIND EXISTING CONCRETE PAVEMENT

ABBREVIATION:

HMA-O - HOT MIX ASPHALT (OPEN GRADED)

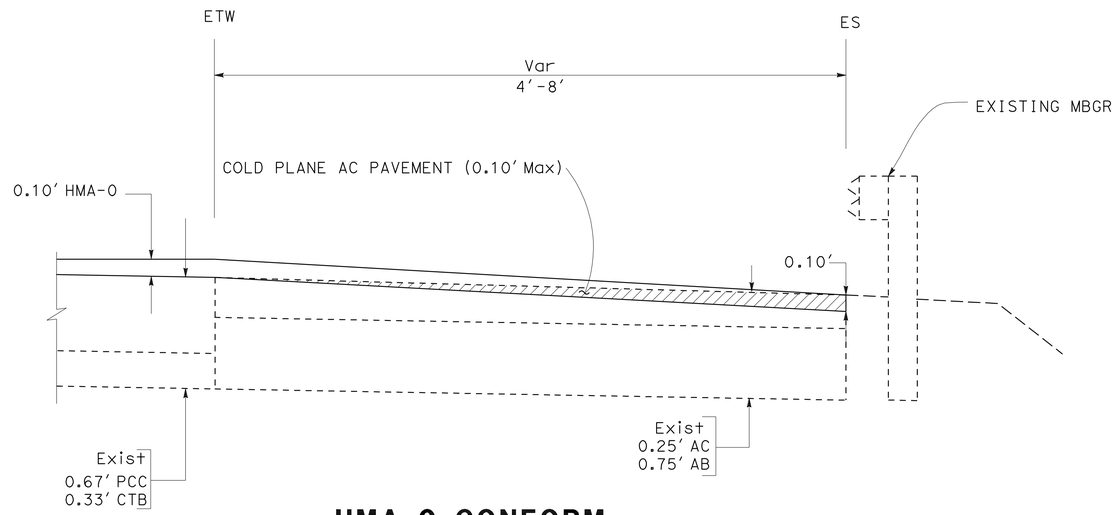

HMA-O CONFORM
LOCATION 3

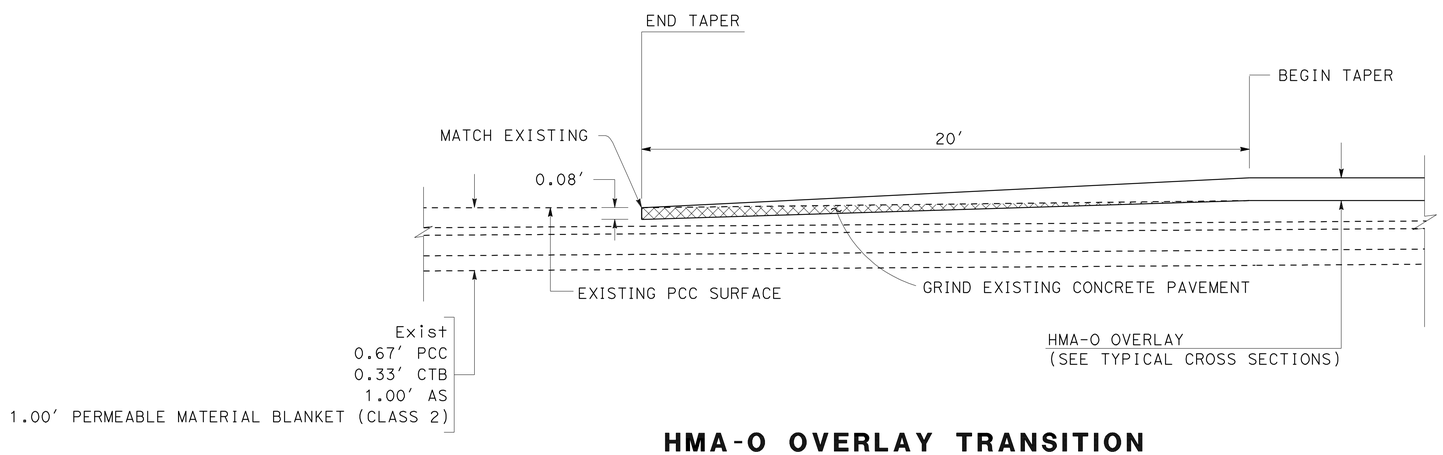

HMA-O OVERLAY TRANSITION
LOCATION 3

CONSTRUCTION DETAILS

NO SCALE

C-1

REVISED BY | DATE REVISED
AI K. TRAN
CALCULATED-DESIGNED BY | CHECKED BY
FUNCTIONAL SUPERVISOR
ERIC Y. WONG

STATE OF CALIFORNIA - DEPARTMENT OF TRANSPORTATION
Caltrans
NORTH REGION
OFFICE OF DESIGN, SOUTH
DESIGN BRANCH 00

13:36 21-OCT-2009 trrichf R:\PSE\03-0F5201\30f520ga001.dgn

LAST REVISION 00-00-00 | DATE PLOTTED => 21-OCT-2009 | TIME PLOTTED => 13:36

Dist	COUNTY	ROUTE	POST MILES TOTAL PROJECT	SHEET No.	TOTAL SHEETS
03	Sac	50,51,80, 99,104	Var	5	26

REGISTERED CIVIL ENGINEER 9-30-09 DATE

10-19-09
PLANS APPROVAL DATE

REGISTERED PROFESSIONAL ENGINEER
AI K. TRAN
No. C64269
Exp. 06-30-11
CIVIL
STATE OF CALIFORNIA

THE STATE OF CALIFORNIA OR ITS OFFICERS OR AGENTS SHALL NOT BE RESPONSIBLE FOR THE ACCURACY OR COMPLETENESS OF SCANNED COPIES OF THIS PLAN SHEET.

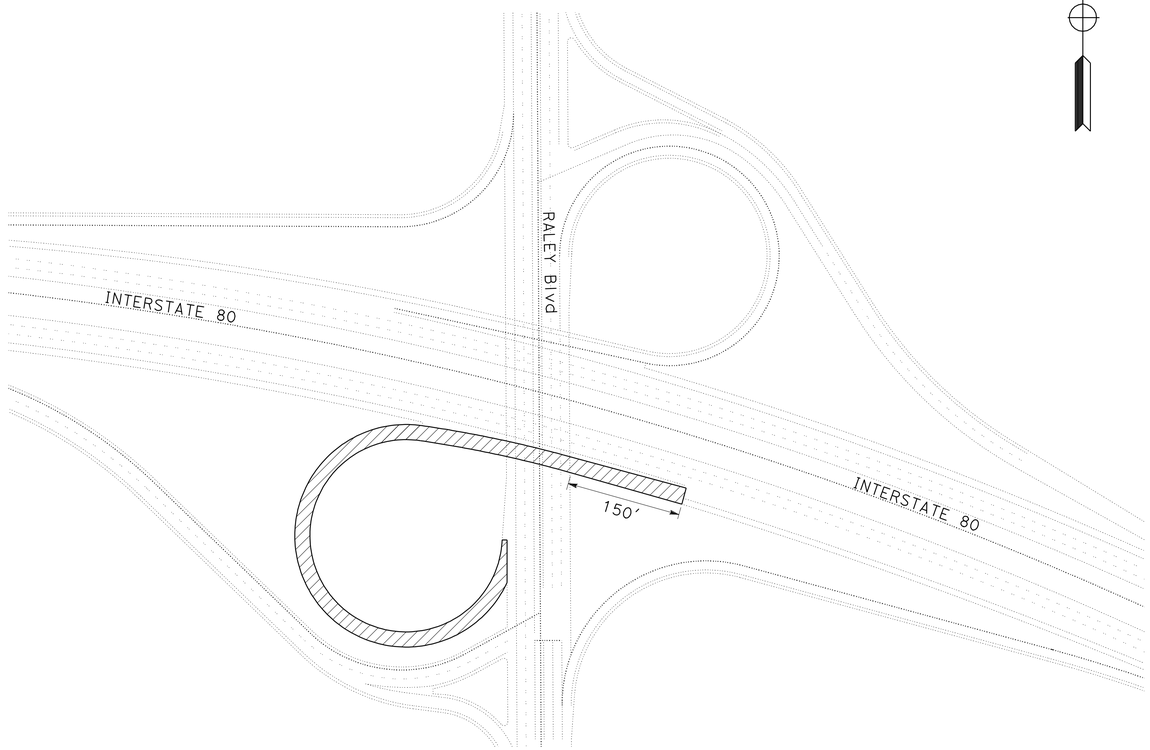

LOCATION 1

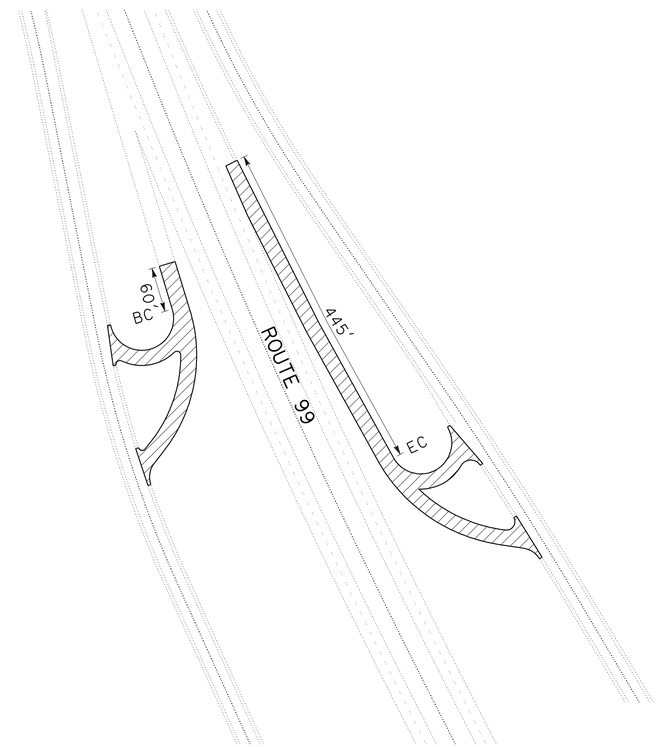

LOCATION 4 & 5

CONSTRUCTION DETAILS
NO SCALE

C-2

REVISED BY | DATE REVISED

AI K. TRAN

CALCULATED-DESIGNED BY | CHECKED BY

FUNCTIONAL SUPERVISOR
ERIC Y. WONG

STATE OF CALIFORNIA - DEPARTMENT OF TRANSPORTATION
Caltrans
NORTH REGION
OFFICE OF DESIGN, SOUTH
DESIGN BRANCH 00

13:36 21-OCT-2009 trrichf R:\PSE\03-0F5201\30f520ga002.dgn

LAST REVISION 00-00-00 | DATE PLOTTED => 21-OCT-2009 | TIME PLOTTED => 13:36

Dist	COUNTY	ROUTE	POST MILES TOTAL PROJECT	SHEET No.	TOTAL SHEETS
03	Sac	50,51,80, 99,104	Var	6	26

REGISTERED CIVIL ENGINEER 9-30-09 DATE

10-19-09
PLANS APPROVAL DATE

REGISTERED PROFESSIONAL ENGINEER
AI K. TRAN
No. C64269
Exp. 06-30-11
CIVIL
STATE OF CALIFORNIA

THE STATE OF CALIFORNIA OR ITS OFFICERS OR AGENTS SHALL NOT BE RESPONSIBLE FOR THE ACCURACY OR COMPLETENESS OF SCANNED COPIES OF THIS PLAN SHEET.

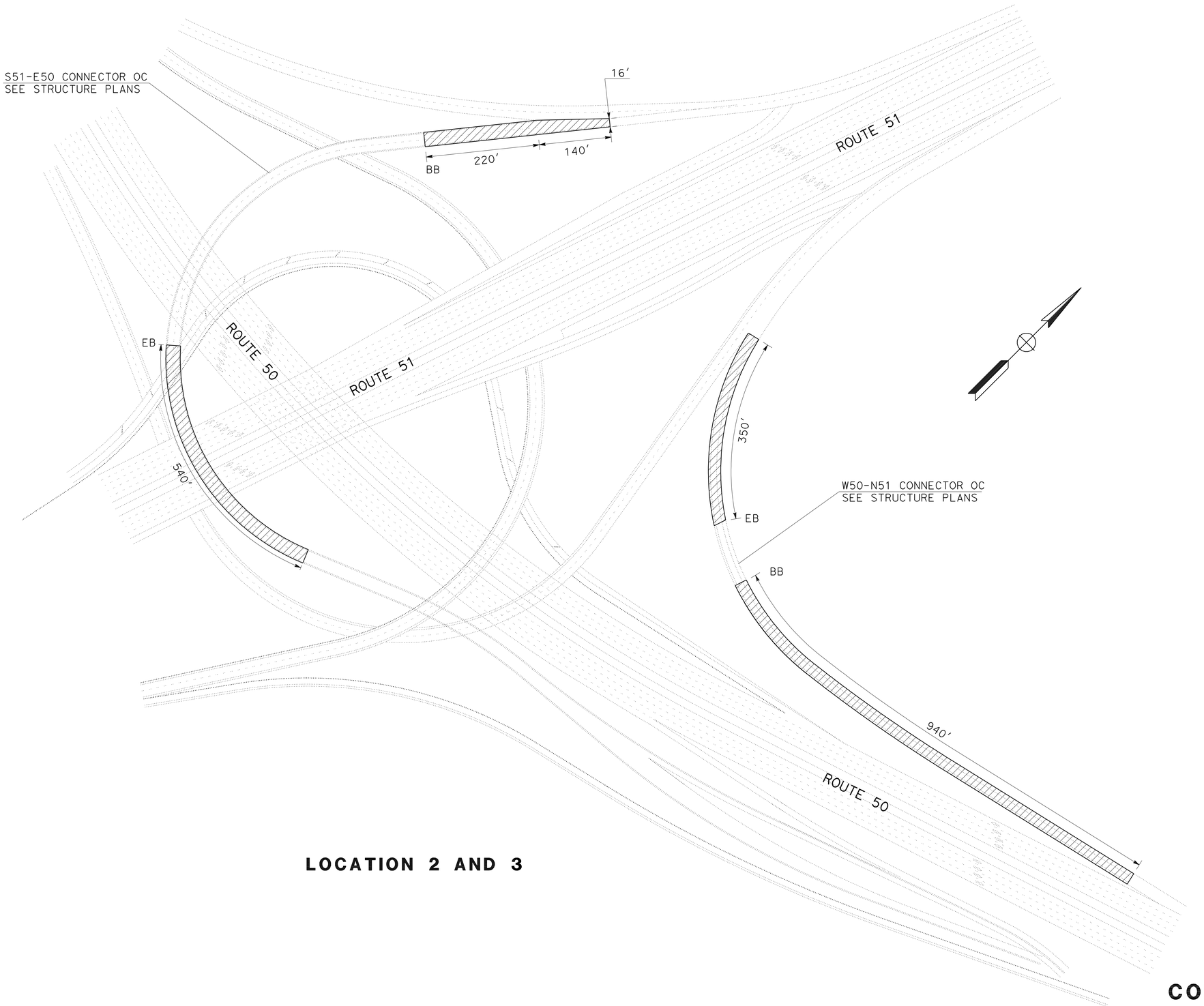

LOCATION 2 AND 3

CONSTRUCTION DETAILS

NO SCALE

C-3

REVISED BY	DATE REVISED

CALCULATED-DESIGNED BY: AI K. TRAN
CHECKED BY:

FUNCTIONAL SUPERVISOR: ERIC Y. WONG

STATE OF CALIFORNIA - DEPARTMENT OF TRANSPORTATION
Caltrans
NORTH REGION
OFFICE OF DESIGN, SOUTH
DESIGN BRANCH 00

13:36 21-OCT-2009 trrichf R:\PSE\03-0F5201\30f520ga003.dgn

LAST REVISION 00-00-00 | DATE PLOTTED => 21-OCT-2009 | TIME PLOTTED => 13:36

Dist	COUNTY	ROUTE	POST MILES TOTAL PROJECT	SHEET No.	TOTAL SHEETS
03	Sac	50,51,80, 99,104	Var	7	26

REGISTERED CIVIL ENGINEER 9-30-09 DATE

10-19-09
PLANS APPROVAL DATE

REGISTERED PROFESSIONAL ENGINEER AI K. TRAN No. C64269 Exp. 06-30-11 CIVIL STATE OF CALIFORNIA

THE STATE OF CALIFORNIA OR ITS OFFICERS OR AGENTS SHALL NOT BE RESPONSIBLE FOR THE ACCURACY OR COMPLETENESS OF SCANNED COPIES OF THIS PLAN SHEET.

NOTES: 1. SIGN LOCATIONS SHOWN ARE APPROXIMATE. EXACT SIGN LOCATIONS TO BE DETERMINED BY THE ENGINEER.
2. FOR ADDITIONAL CONSTRUCTION AREA SIGNS, SEE DETOUR PLAN SHEETS.

LEGEND

- SIGN - SINGLE POST
- SIGN - TWO POST
- SIGN - SSBM

LOCATION 1

STATIONARY MOUNTED CONSTRUCTION AREA SIGNS

SIGN LETTER	SIGN CODE FEDERAL	SIGN CODE CALIFORNIA	PANEL SIZE	SIGN MESSAGE	NUMBER OF POST AND SIZE	NUMBER OF SIGNS
A	W20-1	C23	48" x 48"	ROAD WORK AHEAD	1 - 6" x 6"	1
B	W20-1	C23	30" x 30"	ROAD WORK AHEAD	1 - 4" x 4"	2
C	W20-1	C23	48" x 48"	ROAD WORK AHEAD	SSBM	2
D	G20-2	C14	36" x 18"	END ROAD WORK	1 - 4" x 4"	5
E		C14	48" x 24"	END ROAD WORK	SSBM	2
F		C14	48" x 24"	END ROAD WORK	1 - 4" x 6"	5
G	W20-1	C23	60" x 60"	ROAD WORK AHEAD	2 - 4" x 6"	6

THIS PLAN ACCURATE FOR CONSTRUCTION AREA SIGN WORK ONLY

CONSTRUCTION AREA SIGNS

NO SCALE

CS-1

REVISED BY | DATE REVISED
AI K. TRAN
CALCULATED-DESIGNED BY | CHECKED BY
FUNCTIONAL SUPERVISOR
ERIC Y. WONG

STATE OF CALIFORNIA - DEPARTMENT OF TRANSPORTATION
Caltrans
NORTH REGION
OFFICE OF DESIGN, SOUTH
DESIGN BRANCH 00

13:36 21-OCT-2009 trrichf R:\PSE\03-0f5201\30f5201a001.dgn

LAST REVISION 00-00-00 | DATE PLOTTED => 21-OCT-2009 | TIME PLOTTED => 13:36

Dist	COUNTY	ROUTE	POST MILES TOTAL PROJECT	SHEET No.	TOTAL SHEETS
03	Sac	50,51,80, 99,104	Var	8	26

REGISTERED CIVIL ENGINEER 9-30-09 DATE

10-19-09
PLANS APPROVAL DATE

REGISTERED PROFESSIONAL ENGINEER
AI K. TRAN
No. C64269
Exp. 06-30-11
CIVIL
STATE OF CALIFORNIA

THE STATE OF CALIFORNIA OR ITS OFFICERS OR AGENTS SHALL NOT BE RESPONSIBLE FOR THE ACCURACY OR COMPLETENESS OF SCANNED COPIES OF THIS PLAN SHEET.

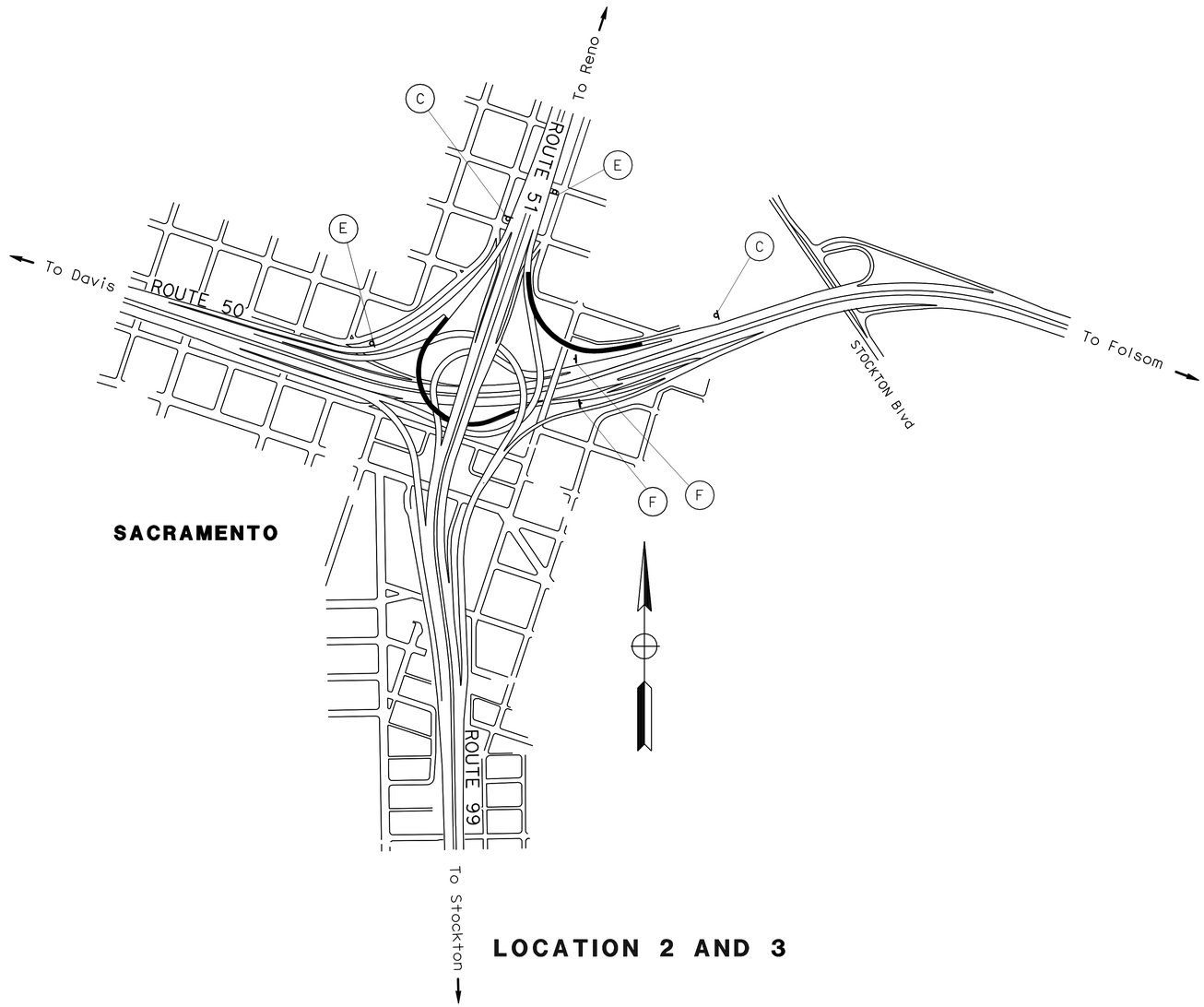

LOCATION 2 AND 3

CONSTRUCTION AREA SIGNS

NO SCALE

THIS PLAN ACCURATE FOR CONSTRUCTION AREA SIGN WORK ONLY

CS-2

REVISED BY	DATE REVISED

CALCULATED-DESIGNED BY: AI K. TRAN
CHECKED BY:

FUNCTIONAL SUPERVISOR: ERIC Y. WONG

STATE OF CALIFORNIA - DEPARTMENT OF TRANSPORTATION
Caltrans
NORTH REGION
OFFICE OF DESIGN, SOUTH
DESIGN BRANCH 00

13:37 21-OCT-2009 trrichf R:\PSE\03-0F5201\30f5201a002.dgn

LAST REVISION 00-00-00 | DATE PLOTTED => 21-OCT-2009 | TIME PLOTTED => 13:37

Dist	COUNTY	ROUTE	POST MILES TOTAL PROJECT	SHEET No.	TOTAL SHEETS
03	Sac	50,51,80, 99,104	Var	9	26

REGISTERED CIVIL ENGINEER 9-30-09 DATE

10-19-09
PLANS APPROVAL DATE

REGISTERED PROFESSIONAL ENGINEER
AI K. TRAN
No. C64269
Exp. 06-30-11
CIVIL
STATE OF CALIFORNIA

THE STATE OF CALIFORNIA OR ITS OFFICERS OR AGENTS SHALL NOT BE RESPONSIBLE FOR THE ACCURACY OR COMPLETENESS OF SCANNED COPIES OF THIS PLAN SHEET.

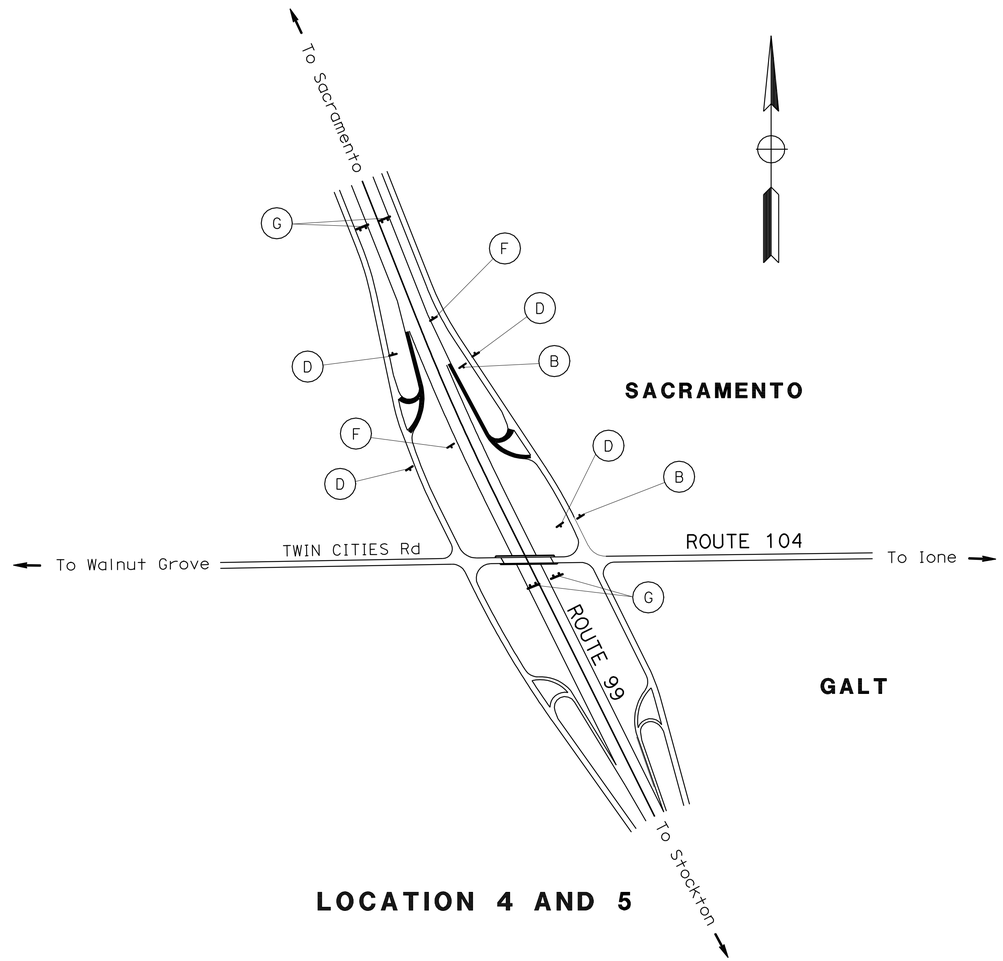

LOCATION 4 AND 5

CONSTRUCTION AREA SIGNS

NO SCALE

THIS PLAN ACCURATE FOR CONSTRUCTION AREA SIGN WORK ONLY

CS-3

REVISED BY | DATE REVISED

AI K. TRAN

CALCULATED-DESIGNED BY | CHECKED BY

FUNCTIONAL SUPERVISOR

ERIC Y. WONG

STATE OF CALIFORNIA - DEPARTMENT OF TRANSPORTATION

Caltrans

NORTH REGION
OFFICE OF DESIGN, SOUTH
DESIGN BRANCH 00

13:37 21-OCT-2009 trrichf R:\PSE\03-0f5201\30f5201a003.dgn

LAST REVISION 00-00-00 | DATE PLOTTED => 21-OCT-2009 | TIME PLOTTED => 13:37

Dist	COUNTY	ROUTE	POST MILES TOTAL PROJECT	SHEET No.	TOTAL SHEETS
03	Sac	50,51,80, 99,104	Var	10	26

REGISTERED CIVIL ENGINEER 9-30-09 DATE

10-19-09
PLANS APPROVAL DATE

REGISTERED PROFESSIONAL ENGINEER AI K. TRAN No. C64269 Exp. 06-30-11 CIVIL STATE OF CALIFORNIA

THE STATE OF CALIFORNIA OR ITS OFFICERS OR AGENTS SHALL NOT BE RESPONSIBLE FOR THE ACCURACY OR COMPLETENESS OF SCANNED COPIES OF THIS PLAN SHEET.

NOTES:

1. EXACT SIGN LOCATIONS, INCLUDING PCMS SIGNS, TO BE DETERMINED BY THE ENGINEER.
2. ALL SIGN CODES SHOWN ARE FEDERAL SIGN CODES UNLESS OTHERWISE DESIGNATED AS CALIFORNIA SIGN CODES.
3. CSP = SPECIAL STATIONARY MOUNTED CONSTRUCTION AREA SIGN.
4. THE CSP SIGN PANELS SHALL BE BLACK ON ORANGE.
5. NUMBER OF SIGN PANELS REQUIRED PER DETOUR SHOWN DOES NOT INCLUDE SIGNS SHOWN ON STANDARD PLANS.

TRAFFIC DETOUR PLAN:

1. CLOSE ON-RAMP TO EB ROUTE 80
2. RIGHT TURN ON GRAND AVENUE
3. RIGHT TURN ON NORWOOD AVENUE
4. TAKE NORWOOD ON-RAMP TO EB ROUTE 80

LOCATION 1

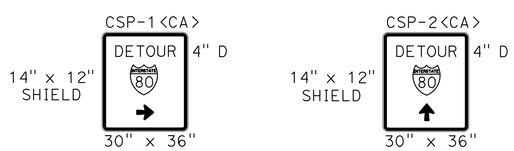

SIGN DETAILS

LEGEND

PCMS	PORTABLE CHANGEABLE MESSAGE SIGN
<CA>	CALIFORNIA SIGN CODE
	SIGN - SINGLE POST
	DIRECTION OF TRAVEL

STATIONARY MOUNTED CONSTRUCTION AREA SIGNS

SIGN CODE		Sign Panel SIZE (MINIMUM)	NUMBER OF SIGN PANELS REQUIRED
FEDERAL	CALIFORNIA		
	CSP-1	30" X 36"	2
	CSP-2	30" X 36"	2
M4-8a	C7	24" X 18"	1

THIS PLAN ACCURATE FOR DETOUR WORK ONLY

DETOUR PLAN

NO SCALE

DE-1

REVISED BY | DATE REVISED
AI K. TRAN
CALCULATED-DESIGNED BY | CHECKED BY
FUNCTIONAL SUPERVISOR
ERIC Y. WONG

STATE OF CALIFORNIA - DEPARTMENT OF TRANSPORTATION
NORTH REGION
OFFICE OF DESIGN, SOUTH
DESIGN BRANCH 00

13:37 21-OCT-2009 trrichf R:\PSE\03-0f5201\30f520mg001.dgn

LAST REVISION 00-00-00 | DATE PLOTTED => 21-OCT-2009 | TIME PLOTTED => 13:37

Dist	COUNTY	ROUTE	POST MILES TOTAL PROJECT	SHEET No.	TOTAL SHEETS
03	Sac	50,51,80, 99,104	Var	11	26

REGISTERED CIVIL ENGINEER 9-30-09 DATE

10-19-09
PLANS APPROVAL DATE

REGISTERED PROFESSIONAL ENGINEER AI K. TRAN No. C64269 Exp. 06-30-11 CIVIL STATE OF CALIFORNIA

THE STATE OF CALIFORNIA OR ITS OFFICERS OR AGENTS SHALL NOT BE RESPONSIBLE FOR THE ACCURACY OR COMPLETENESS OF SCANNED COPIES OF THIS PLAN SHEET.

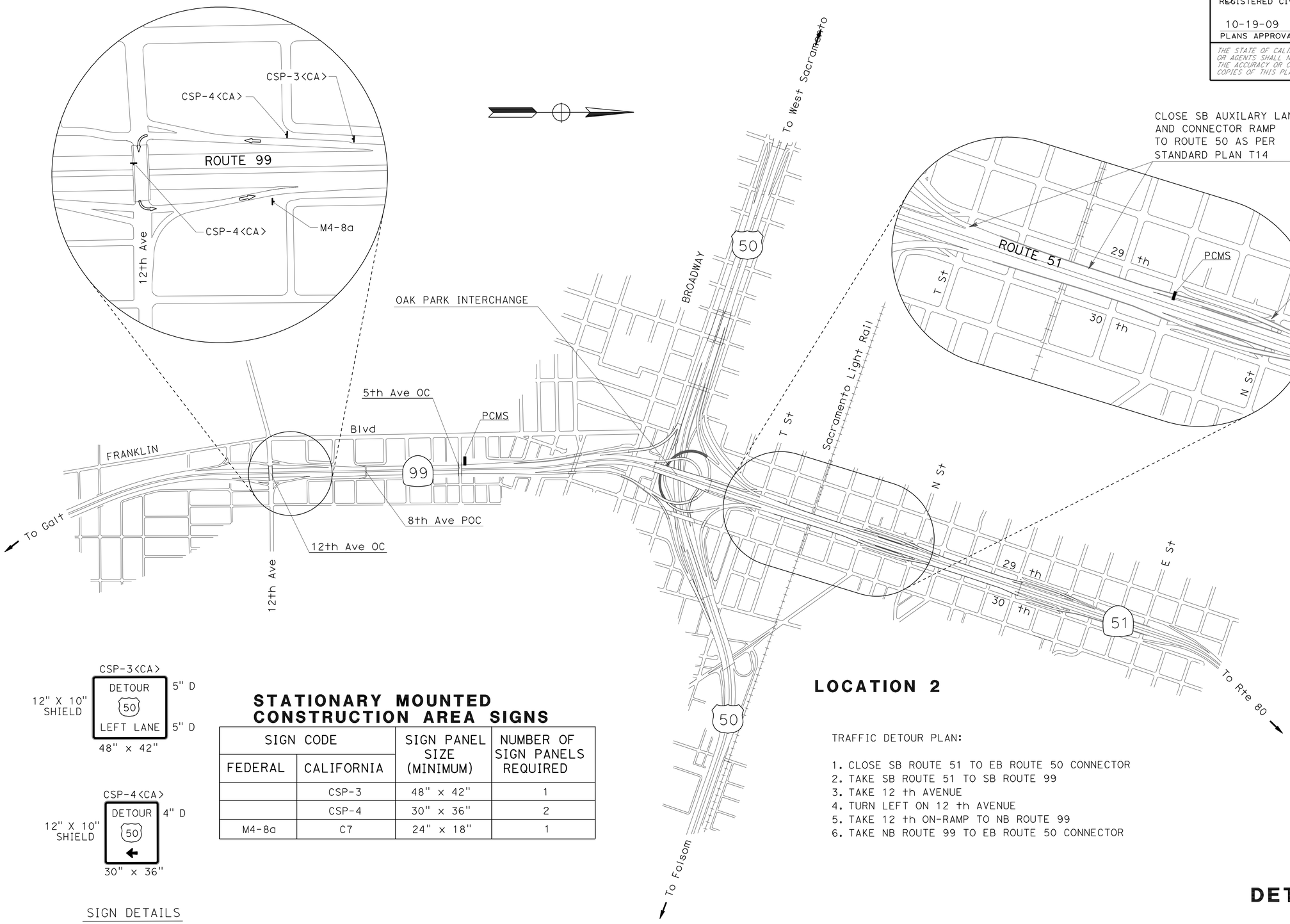

LOCATION 2

TRAFFIC DETOUR PLAN:

1. CLOSE SB ROUTE 51 TO EB ROUTE 50 CONNECTOR
2. TAKE SB ROUTE 51 TO SB ROUTE 99
3. TAKE 12 th AVENUE
4. TURN LEFT ON 12 th AVENUE
5. TAKE 12 th ON-RAMP TO NB ROUTE 99
6. TAKE NB ROUTE 99 TO EB ROUTE 50 CONNECTOR

SIGN DETAILS

STATIONARY MOUNTED CONSTRUCTION AREA SIGNS

SIGN CODE		SIGN PANEL SIZE (MINIMUM)	NUMBER OF SIGN PANELS REQUIRED
FEDERAL	CALIFORNIA		
	CSP-3	48" x 42"	1
	CSP-4	30" x 36"	2
M4-8a	C7	24" x 18"	1

THIS PLAN ACCURATE FOR DETOUR WORK ONLY

DETOUR PLAN
NO SCALE

DE-2

REVISED BY	DATE REVISED

AI K. TRAN

CALCULATED-DESIGNED BY
CHECKED BY

FUNCTIONAL SUPERVISOR
ERIC Y. WONG

STATE OF CALIFORNIA - DEPARTMENT OF TRANSPORTATION
NORTH REGION
OFFICE OF DESIGN, SOUTH
DESIGN BRANCH 00

13:37 21-OCT-2009 trrichf R:\PSE\03-0F5201\30f520mg002.dgn

LAST REVISION DATE PLOTTED => 21-OCT-2009
00-00-00 TIME PLOTTED => 13:37

Dist	COUNTY	ROUTE	POST MILES TOTAL PROJECT	SHEET No.	TOTAL SHEETS
03	Sac	50,51,80, 99,104	Var	12	26

REGISTERED CIVIL ENGINEER 9-30-09 DATE

10-19-09
PLANS APPROVAL DATE

REGISTERED PROFESSIONAL ENGINEER AI K. TRAN No. C64269 Exp. 06-30-11 CIVIL STATE OF CALIFORNIA

THE STATE OF CALIFORNIA OR ITS OFFICERS OR AGENTS SHALL NOT BE RESPONSIBLE FOR THE ACCURACY OR COMPLETENESS OF SCANNED COPIES OF THIS PLAN SHEET.

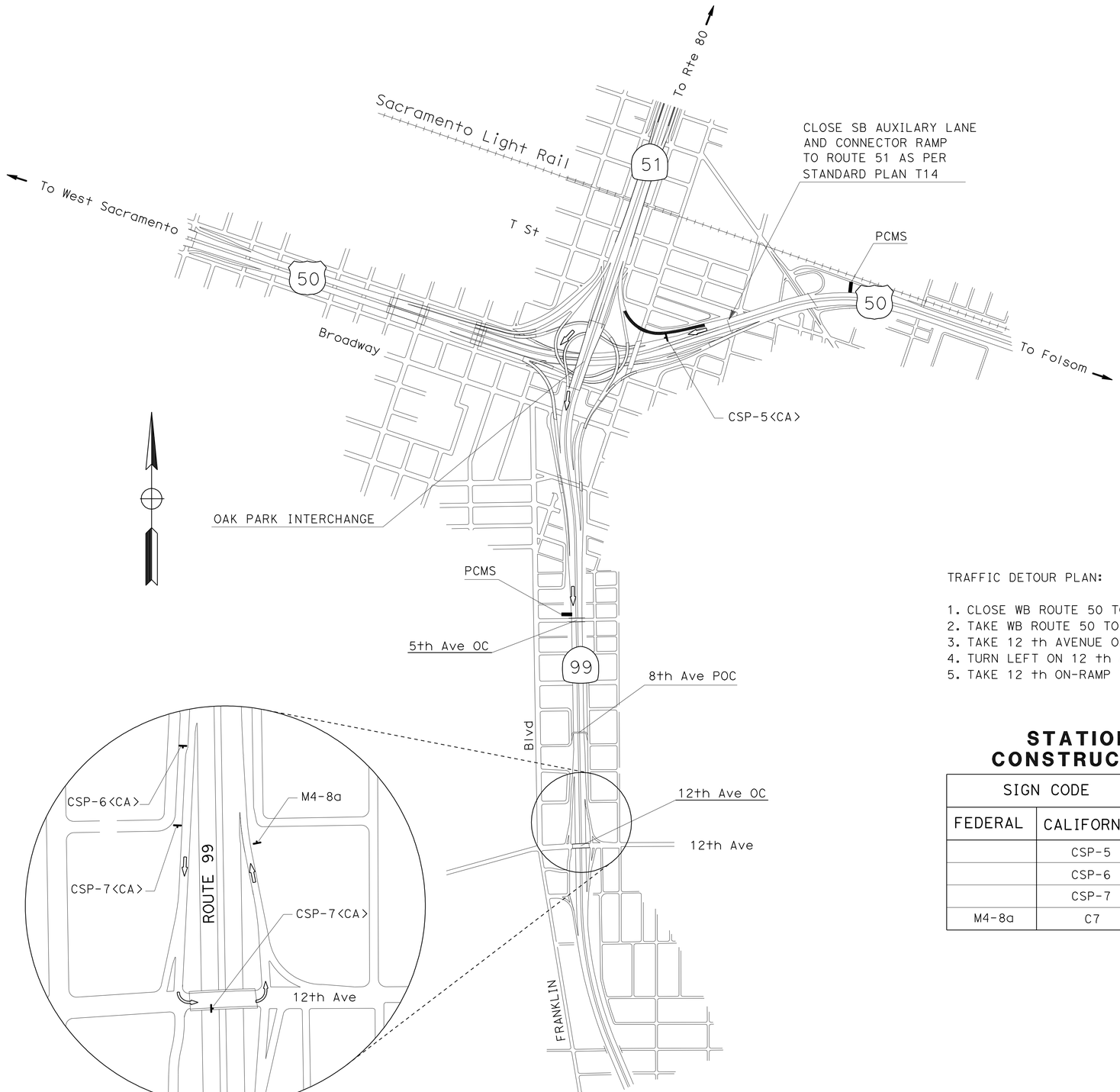

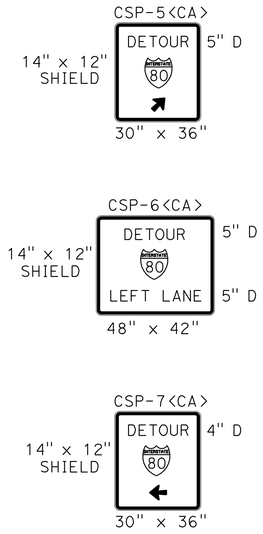

SIGN DETAILS

TRAFFIC DETOUR PLAN:

1. CLOSE WB ROUTE 50 TO NB ROUTE 51 CONNECTOR
2. TAKE WB ROUTE 50 TO SB ROUTE 99 CONNECTOR
3. TAKE 12 th AVENUE OFF-RAMP
4. TURN LEFT ON 12 th AVENUE
5. TAKE 12 th ON-RAMP TO NB ROUTE 51

STATIONARY MOUNTED CONSTRUCTION AREA SIGNS

SIGN CODE		SIGN PANEL SIZE (MINIMUM)	NUMBER OF SIGN PANELS REQUIRED
FEDERAL	CALIFORNIA		
	CSP-5	30" x 36"	1
	CSP-6	48" x 42"	1
	CSP-7	30" x 36"	2
M4-8a	C7	24" x 18"	1

LOCATION 3

THIS PLAN ACCURATE FOR DETOUR WORK ONLY

DETOUR PLAN
NO SCALE

DE-3

REVISED BY | DATE REVISED
AI K. TRAN
CALCULATED-DESIGNED BY | CHECKED BY
FUNCTIONAL SUPERVISOR
ERIC Y. WONG

STATE OF CALIFORNIA - DEPARTMENT OF TRANSPORTATION
Caltrans
NORTH REGION
OFFICE OF DESIGN, SOUTH
DESIGN BRANCH 00

13:37 21-OCT-2009 trrichf R:\PSE\03-0F5201\30f520mg003.dgn

LAST REVISION 00-00-00 | DATE PLOTTED => 21-OCT-2009 | TIME PLOTTED => 13:37

Dist	COUNTY	ROUTE	POST MILES TOTAL PROJECT	SHEET No.	TOTAL SHEETS
03	Sac	50,51,80, 99,104	Var	13	26

REGISTERED CIVIL ENGINEER 9-30-09 DATE

10-19-09
PLANS APPROVAL DATE

REGISTERED PROFESSIONAL ENGINEER AI K. TRAN No. C64269 Exp. 06-30-11 CIVIL STATE OF CALIFORNIA

THE STATE OF CALIFORNIA OR ITS OFFICERS OR AGENTS SHALL NOT BE RESPONSIBLE FOR THE ACCURACY OR COMPLETENESS OF SCANNED COPIES OF THIS PLAN SHEET.

STATIONARY MOUNTED CONSTRUCTION AREA SIGNS

SIGN CODE		SIGN PANEL SIZE (MINIMUM)	NUMBER OF SIGN PANELS REQUIRED
FEDERAL	CALIFORNIA		
	CSP-8	30" x 36"	1
	CSP-9	30" x 36"	1
M4-8a	C7	24" x 18"	1

TRAFFIC DETOUR PLAN:

1. CLOSE SB ROUTE 99 OFF-RAMP TO ROUTE 104
2. TAKE SB ROUTE 99 OFF-RAMP TO WALNUT AVENUE
3. TURN RIGHT ONTO STOCKTON Blvd TO ROUTE 104

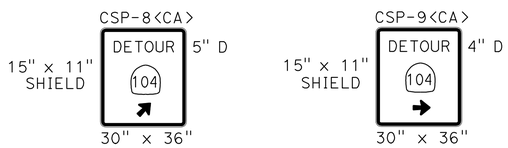

SIGN DETAILS

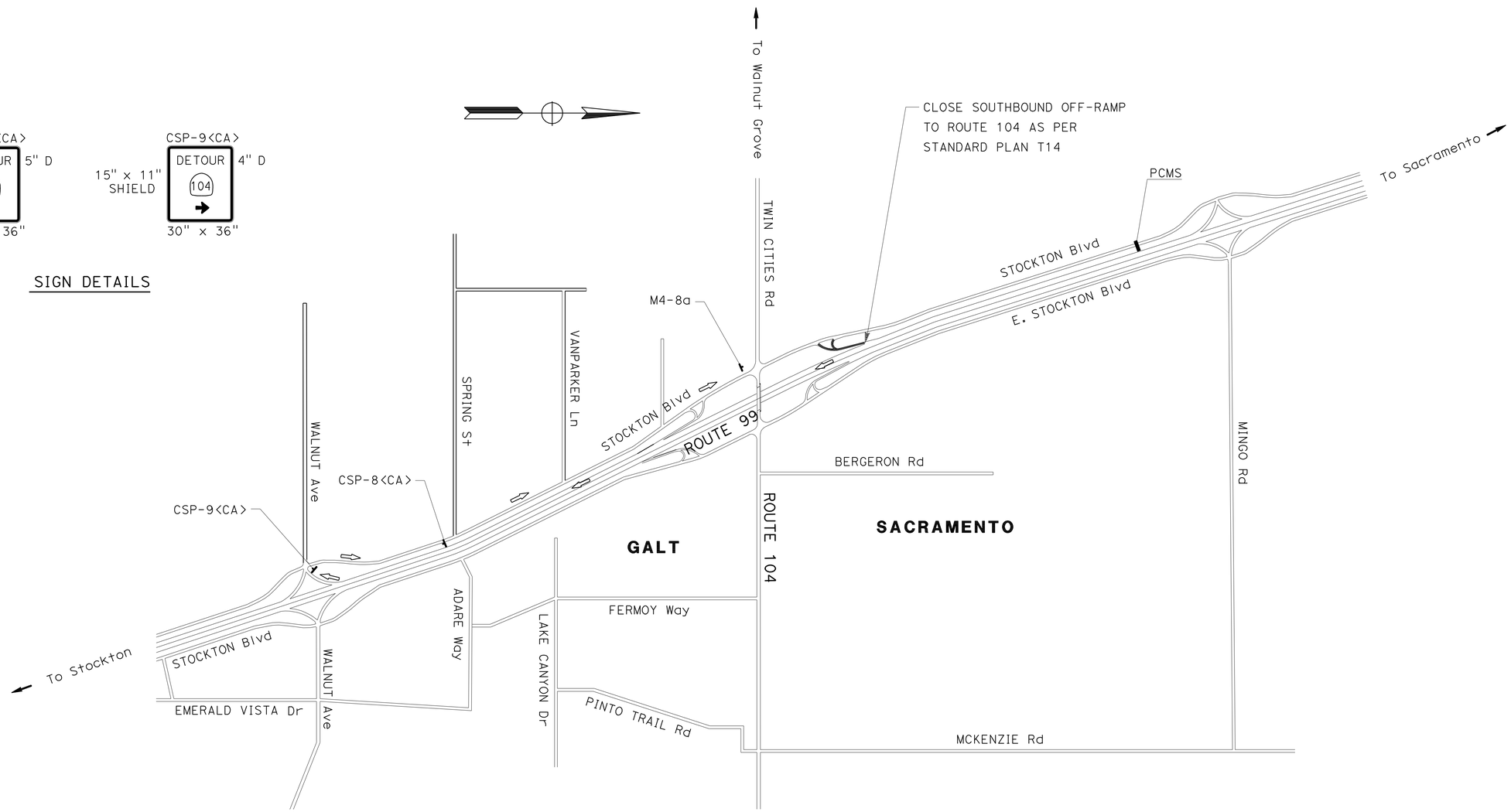

LOCATION 4

THIS PLAN ACCURATE FOR DETOUR WORK ONLY

DETOUR PLAN

NO SCALE **DE-4**

REVISED BY	DATE REVISED

AI K. TRAN

CALCULATED-DESIGNED BY / CHECKED BY

FUNCTIONAL SUPERVISOR: ERIC Y. WONG

STATE OF CALIFORNIA - DEPARTMENT OF TRANSPORTATION
Caltrans
NORTH REGION
OFFICE OF DESIGN, SOUTH
DESIGN BRANCH 00

13:38 21-OCT-2009 trrichf R:\PSE\03-0f5201\30f520mg004.dgn

LAST REVISION 00-00-00 DATE PLOTTED => 21-OCT-2009 TIME PLOTTED => 13:38

Dist	COUNTY	ROUTE	POST MILES TOTAL PROJECT	SHEET No.	TOTAL SHEETS
03	Sac	50,51,80, 99,104	Var	14	26

REGISTERED CIVIL ENGINEER 9-30-09 DATE

10-19-09
PLANS APPROVAL DATE

REGISTERED PROFESSIONAL ENGINEER AI K. TRAN No. C64269 Exp. 06-30-11 CIVIL STATE OF CALIFORNIA

THE STATE OF CALIFORNIA OR ITS OFFICERS OR AGENTS SHALL NOT BE RESPONSIBLE FOR THE ACCURACY OR COMPLETENESS OF SCANNED COPIES OF THIS PLAN SHEET.

STATIONARY MOUNTED CONSTRUCTION AREA SIGNS

SIGN CODE		SIGN PANEL SIZE (MINIMUM)	NUMBER OF SIGN PANELS REQUIRED
FEDERAL	CALIFORNIA		
	CSP-10	30" x 36"	1
	CSP-11	30" x 36"	1
M4-8a	C7	24" x 18"	1

TRAFFIC DETOUR PLAN:

1. CLOSE NB ON-RAMP TO ROUTE 99
2. TAKE E. STOCKTON BLVD TO MINGO ROAD
3. TURN LEFT TO NB ROUTE 99 ON-RAMP

CSP-10<CA>

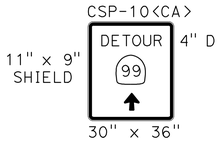

CSP-11<CA>

SIGN DETAILS

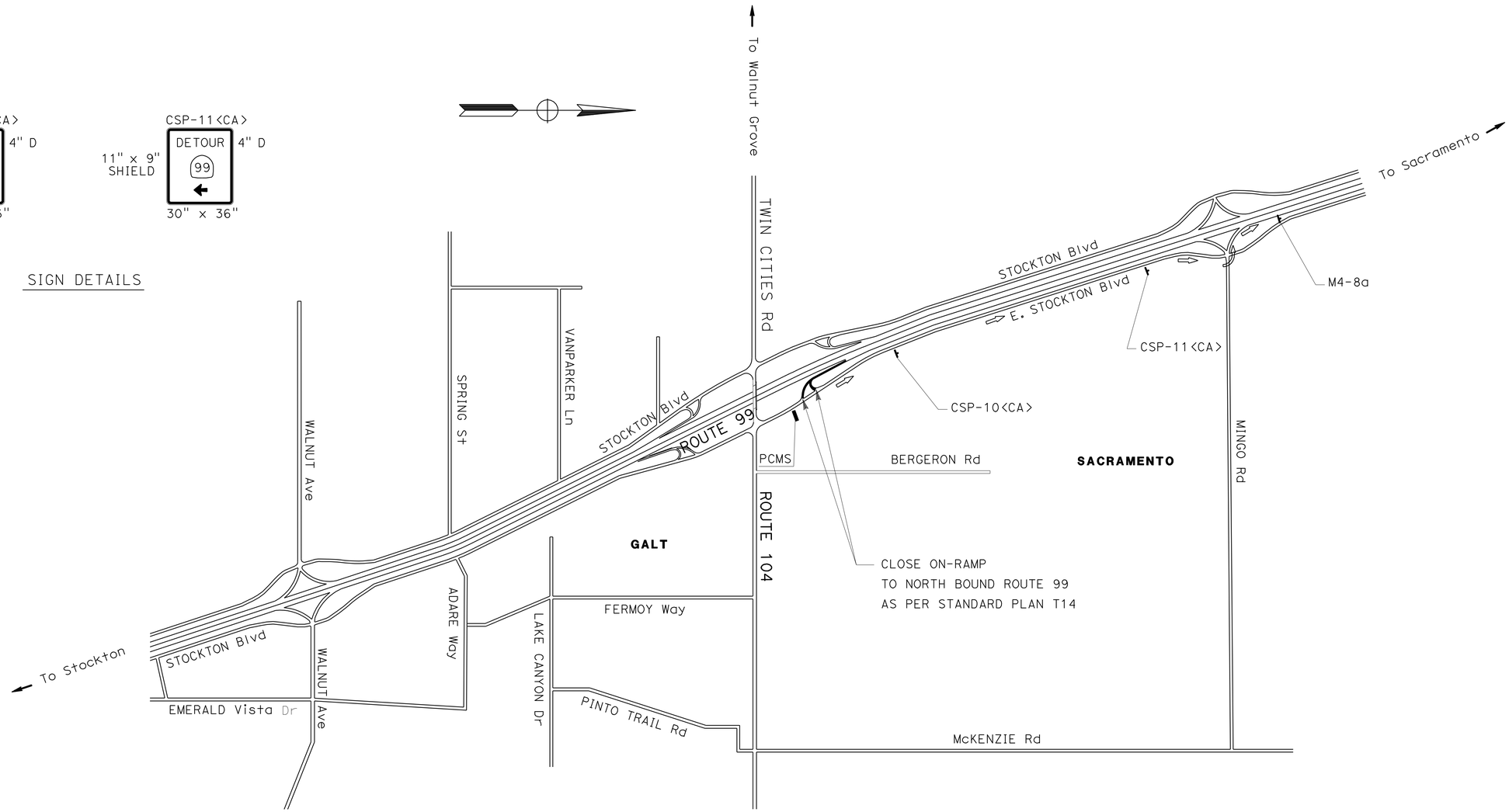

LOCATION 5

THIS PLAN ACCURATE FOR DETOUR WORK ONLY

DETOUR PLAN
NO SCALE

DE-5

REVISED BY | DATE REVISED
AI K. TRAN
CALCULATED-DESIGNED BY | CHECKED BY
FUNCTIONAL SUPERVISOR
ERIC Y. WONG

STATE OF CALIFORNIA - DEPARTMENT OF TRANSPORTATION
Caltrans
NORTH REGION
OFFICE OF DESIGN, SOUTH
DESIGN BRANCH 00

13:38 21-OCT-2009 trrichf R:\PSE\03-0F5201\30f520mg005.dgn

LAST REVISION 00-00-00 | DATE PLOTTED => 21-OCT-2009 | TIME PLOTTED => 13:38

Dist	COUNTY	ROUTE	POST MILES TOTAL PROJECT	SHEET No.	TOTAL SHEETS
03	Sac	50,51,80, 99,104	Var	15	26

REGISTERED CIVIL ENGINEER 9-30-09 DATE

10-19-09
PLANS APPROVAL DATE

REGISTERED PROFESSIONAL ENGINEER AI K. TRAN No. C64269 Exp. 06-30-11 CIVIL STATE OF CALIFORNIA

THE STATE OF CALIFORNIA OR ITS OFFICERS OR AGENTS SHALL NOT BE RESPONSIBLE FOR THE ACCURACY OR COMPLETENESS OF SCANNED COPIES OF THIS PLAN SHEET.

ROADWAY QUANTITIES

LOCATION	COLD PLANE ASPHALT CONCRETE PAVEMENT	HOT MIX ASPHALT (OPEN GRADED)	REMOVE ASPHALT CONCRETE DIKE	PLACE HOT MIX ASPHALT DIKE (TYPE A)	MINOR HOT MIX ASPHALT	IMPORTED MATERIAL (SHOULDER BACKING)	TACK COAT	GRIND EXISTING CONCRETE PAVEMENT
	SQYD	TON	LF	LF	TON	TON	TON	SQYD
LOCATION 1	2220	150	680	680	20	35	0.49	
LOCATION 2	3075	210					0.52	
LOCATION 3	1720	240					0.69	108
LOCATION 4	970	65					0.19	
LOCATION 5	1790	120					0.35	
FROM STRUCTURE PLANS		180						
TOTAL	9775	965	680	680	20	35	2.24	108

PAVEMENT DELINEATION QUANTITIES

LOCATION	4" THERMOPLASTIC TRAFFIC STRIPE				8" THERMOPLASTIC TRAFFIC STRIPE	THERMOPLASTIC PAVEMENT MARKING			PAVEMENT MARKER (RETROREFLECTIVE)	
	SOLID PATTERN		BROKEN 36-12	BROKEN 17-7	SOLID PATTERN	TYPE I 24'-0" ARROW	TYPE V ARROW	LIMIT LINE/ CROSS WALK		
	DETAIL NUMBER		DETAIL NUMBER	DETAIL NUMBER	DETAIL NUMBER					
	25A (LF)	27B (LF)	12 (LF)	9 (LF)	36A (LF)	SQFT			TYPE G (EA)	TYPE H (EA)
LOCATION 1	640	1000		160	200	31		36	10	28
LOCATION 2	1440	1495	1470						83	61
LOCATION 3	1470	1450								63
LOCATION 4	370	325					66			17
LOCATION 5	445	720		105	190	62			13	20
SUBTOTAL	4365	4990	1470	265	390	93	66	36	106	189
TOTAL	9355		1470	265	390	195			295	

SUMMARY OF QUANTITIES

Q-1

REVISED BY | DATE REVISED

AI K. TRAN

CALCULATED-DESIGNED BY | CHECKED BY

FUNCTIONAL SUPERVISOR

ERIC Y. WONG

STATE OF CALIFORNIA - DEPARTMENT OF TRANSPORTATION

Caltrans

NORTH REGION
OFFICE OF DESIGN, SOUTH
DESIGN BRANCH 00

13:38 21-OCT-2009 trrichf R:\PSE\03-0F5201\30f520pa001.dgn

LAST REVISION 00-00-00 | DATE PLOTTED => 21-OCT-2009 TIME PLOTTED => 13:38

Dist	COUNTY	ROUTE	POST MILES TOTAL PROJECT	SHEET No.	TOTAL SHEETS
03	Sac	50,51,80, 99,104	Var	16	26

H. Golban 09-30-09
REGISTERED ELECTRICAL ENGINEER

10-19-09
PLANS APPROVAL DATE

REGISTERED PROFESSIONAL ENGINEER HABIB GOLBAN No. E17928 Exp. 09-30-10 ELECTRICAL STATE OF CALIFORNIA

THE STATE OF CALIFORNIA OR ITS OFFICERS OR AGENTS SHALL NOT BE RESPONSIBLE FOR THE ACCURACY OR COMPLETENESS OF SCANNED COPIES OF THIS PLAN SHEET.

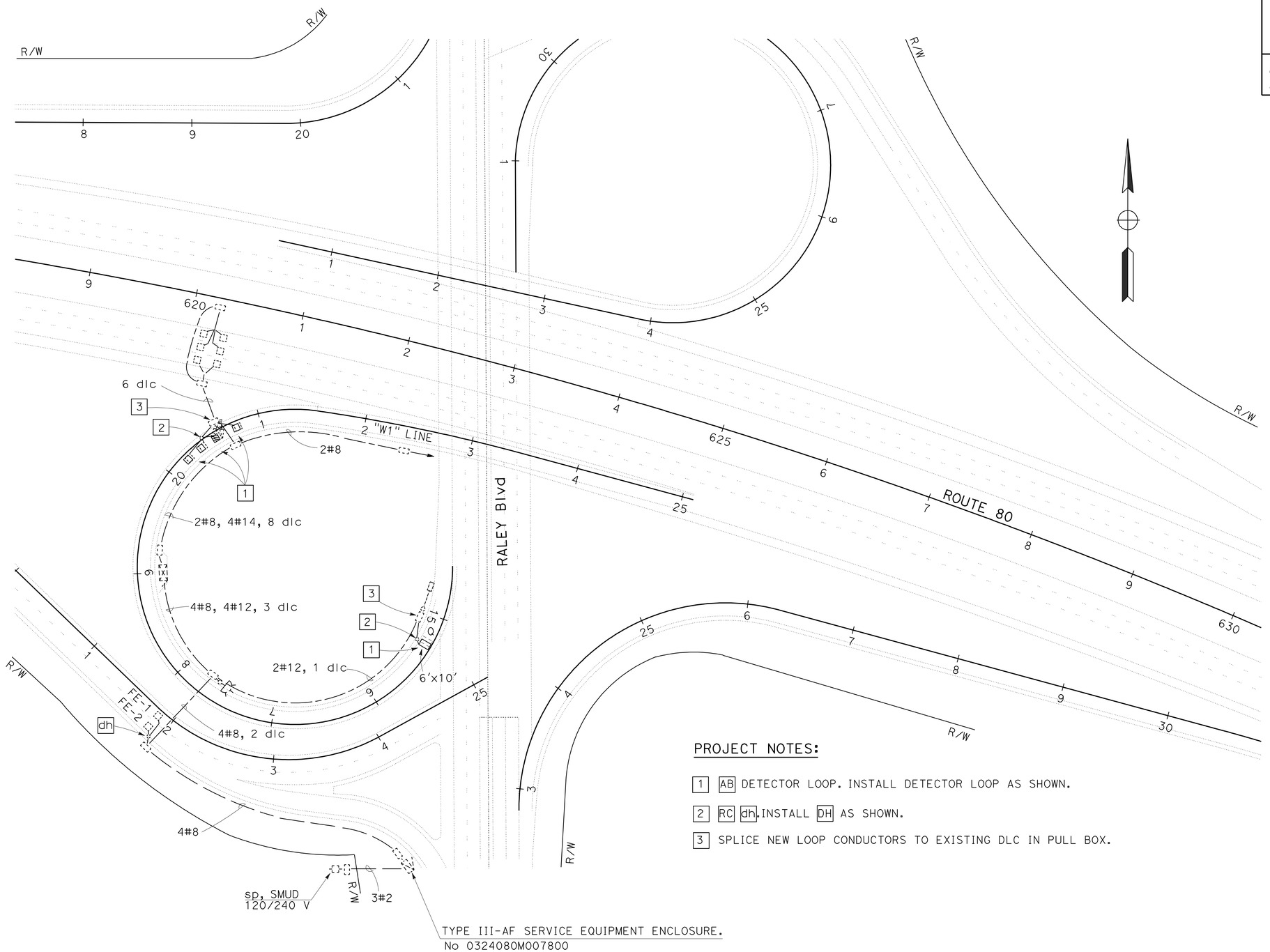

PROJECT NOTES:

1. AB DETECTOR LOOP. INSTALL DETECTOR LOOP AS SHOWN.
2. RC dh. INSTALL DH AS SHOWN.
3. SPLICE NEW LOOP CONDUCTORS TO EXISTING DLC IN PULL BOX.

MODIFY RAMP METERING SYSTEM

THIS PLAN ACCURATE FOR ELECTRICAL WORK ONLY.

SCALE: 1" = 50'

E-1

STATE OF CALIFORNIA - DEPARTMENT OF TRANSPORTATION
OFFICE OF ELECTRICAL DESIGN
SACRAMENTO

FUNCTIONAL SUPERVISOR: NELSON LEE
CALCULATED-DESIGNED BY: HERNAN ROMERO
CHECKED BY: HABIB GOLBAN
REVISED BY
DATE REVISED

LAST REVISION 10-19-09
DATE PLOTTED => 21-OCT-2009
TIME PLOTTED => 13:38

DIST	COUNTY	ROUTE	POST MILES TOTAL PROJECT	SHEET NO.	TOTAL SHEETS
03	Sac	50,51,80, 99,104	Var	17	26

Randell D. Hiatt
REGISTERED CIVIL ENGINEER

June 6, 2008
PLANS APPROVAL DATE

REGISTERED PROFESSIONAL ENGINEER
Randell D. Hiatt
No. C50200
Exp. 6-30-09
CIVIL
STATE OF CALIFORNIA

The State of California or its officers or agents shall not be responsible for the accuracy or completeness of electronic copies of this plan sheet.

To accompany plans dated 10-19-09

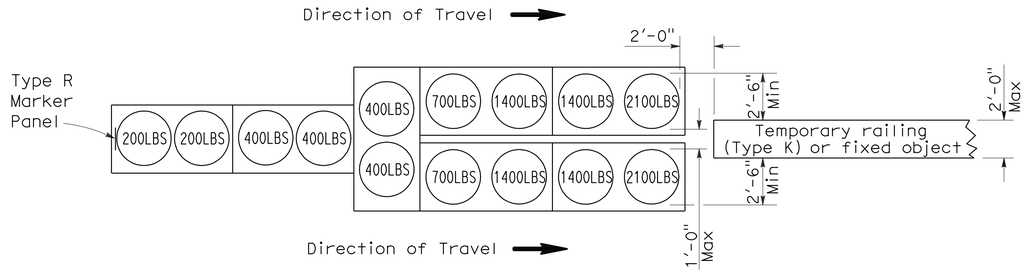

ARRAY 'TU14'

Approach speed 45 mph or more

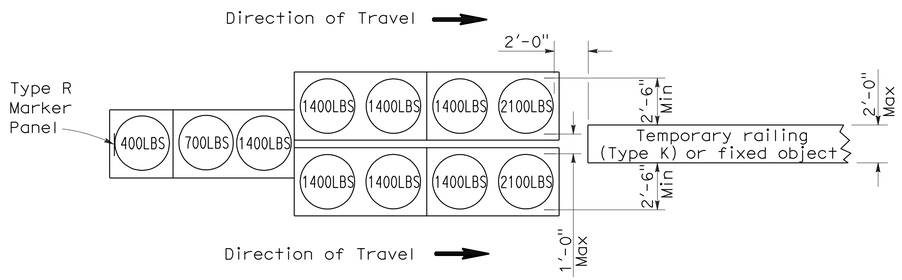

ARRAY 'TU11'

Approach speed less than 45 mph

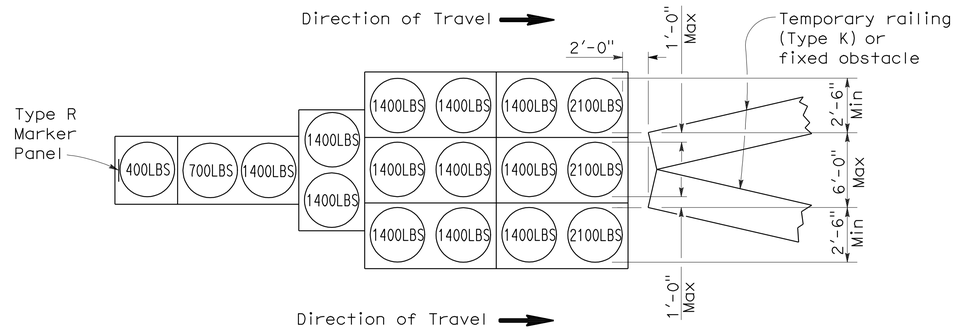

ARRAY 'TU17'

Approach speed less than 45 mph

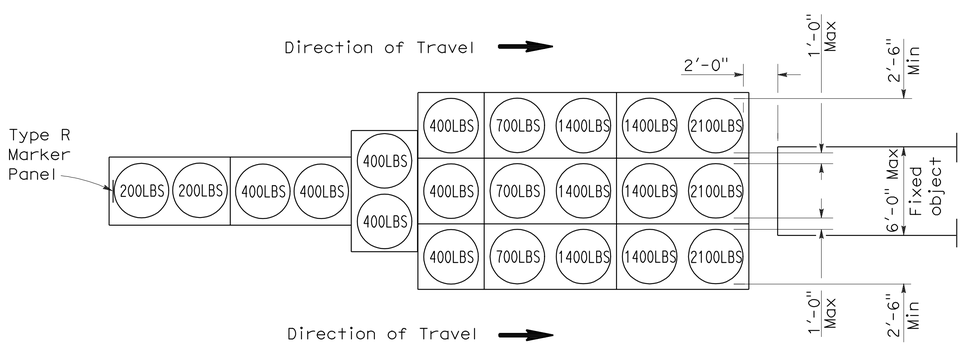

ARRAY 'TU21'

Approach speed 45 mph or more

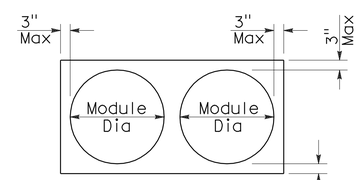

PLAN

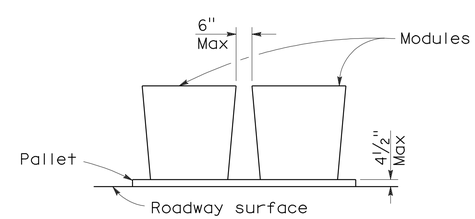

ELEVATION

CRASH CUSHION PALLET DETAIL

See Note 7

NOTES:

1. (XXX) Indicates sand filled module location and weight of sand in pounds for each module. Module spacing is based on the greater diameter of the module.
2. All sand weights are nominal.
3. Temporary crash cushion arrays shall not encroach on the traveled way.
4. Place the top of Type R marker panel 1" below the module lid.
5. Refer to Standard Plan A73B for marker details.
6. Approach speeds indicated conform to NCHRP 350 Report criteria.
7. Use of pallets is optional.

STATE OF CALIFORNIA
DEPARTMENT OF TRANSPORTATION

TEMPORARY CRASH CUSHION, SAND FILLED (UNIDIRECTIONAL)

NO SCALE

RSP T1A DATED JUNE 6, 2008 SUPERSEDES STANDARD PLAN T1A
DATED MAY 1, 2006 - PAGE 211 OF THE STANDARD PLANS BOOK DATED MAY 2006.

REVISED STANDARD PLAN RSP T1A

2006 REVISED STANDARD PLAN RSP T1A

DIST	COUNTY	ROUTE	POST MILES TOTAL PROJECT	SHEET NO.	TOTAL SHEETS
03	Sac	50,51,80, 99,104	Var	18	26

Randell D. Hiatt
REGISTERED CIVIL ENGINEER

June 6, 2008
PLANS APPROVAL DATE

REGISTERED PROFESSIONAL ENGINEER
Randell D. Hiatt
No. C50200
Exp. 6-30-09
CIVIL
STATE OF CALIFORNIA

The State of California or its officers or agents shall not be responsible for the accuracy or completeness of electronic copies of this plan sheet.

To accompany plans dated 10-19-09

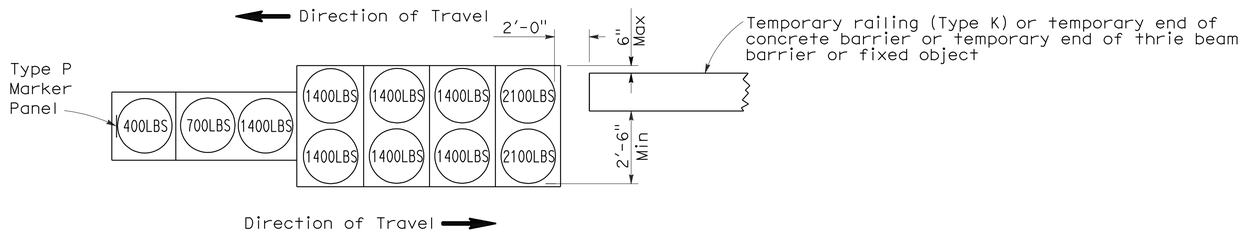

ARRAY 'TB11'

Approach speed less than 45 mph

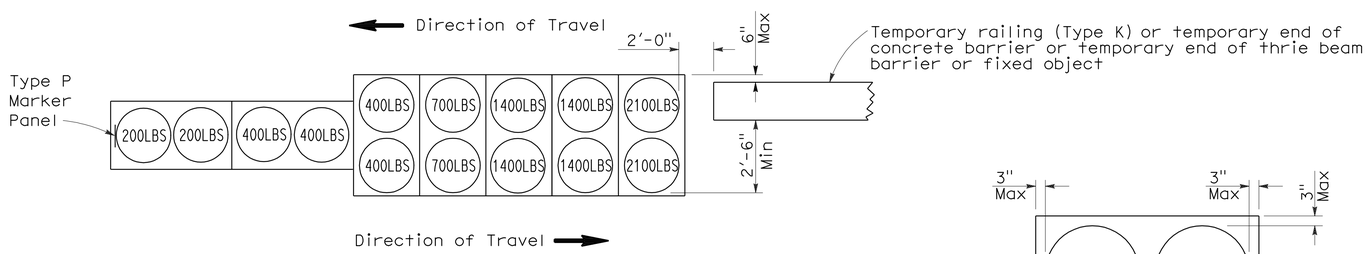

ARRAY 'TB14'

Approach speed 45 mph or more

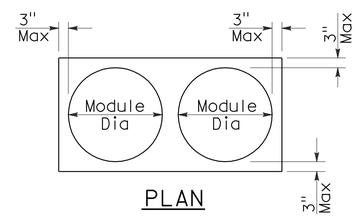

PLAN

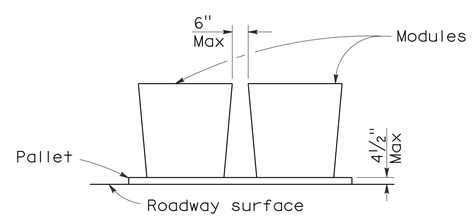

ELEVATION

CRASH CUSHION PALLET DETAIL

See Note 7

NOTES:

1. (XXX) Indicates sand filled module location and weight of sand in pounds for each module. Module spacing is based on the greater diameter of the module.
2. All sand weights are nominal.
3. Temporary crash cushion arrays shall not encroach on the traveled way.
4. Place the Type P marker panel so that the bottom of the panel rests upon the pallet.
5. Refer to Standard Plan A73B for marker details.
6. Approach speeds indicated conform to NCHRP 350 Report criteria.
7. Use of pallets is optional.

STATE OF CALIFORNIA
DEPARTMENT OF TRANSPORTATION

TEMPORARY CRASH CUSHION, SAND FILLED (BIDIRECTIONAL)

NO SCALE

RSP T1B DATED JUNE 6, 2008 SUPERSEDES STANDARD PLAN T1B
DATED MAY 1, 2006 - PAGE 212 OF THE STANDARD PLANS BOOK DATED MAY 2006.

REVISED STANDARD PLAN RSP T1B

2006 REVISED STANDARD PLAN RSP T1B

5-15-08

DIST	COUNTY	ROUTE	POST MILES TOTAL PROJECT	SHEET NO.	TOTAL SHEETS
03	Sac	50,51,80, 99,104	Var	19	26

Randell D. Hiatt
REGISTERED CIVIL ENGINEER

June 6, 2008
PLANS APPROVAL DATE

REGISTERED PROFESSIONAL ENGINEER
Randell D. Hiatt
No. C50200
Exp. 6-30-09
CIVIL
STATE OF CALIFORNIA

The State of California or its officers or agents shall not be responsible for the accuracy or completeness of electronic copies of this plan sheet.

To accompany plans dated 10-19-09

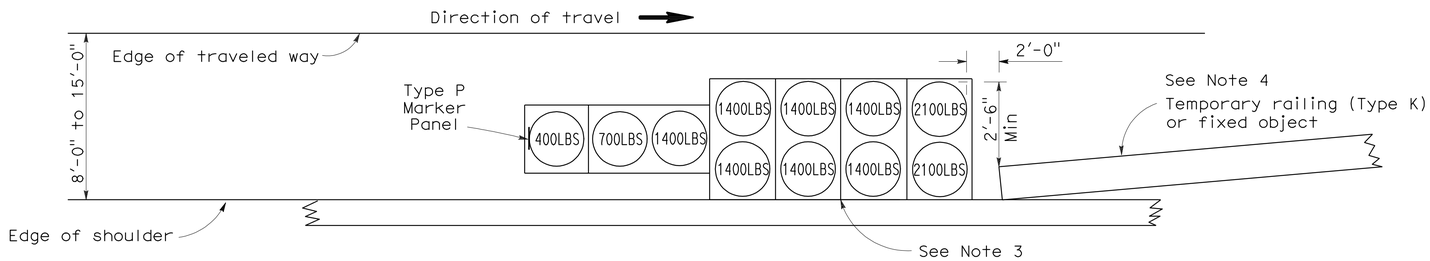

ARRAY 'TS11'

Approach speed less than 45 mph
See Note 9

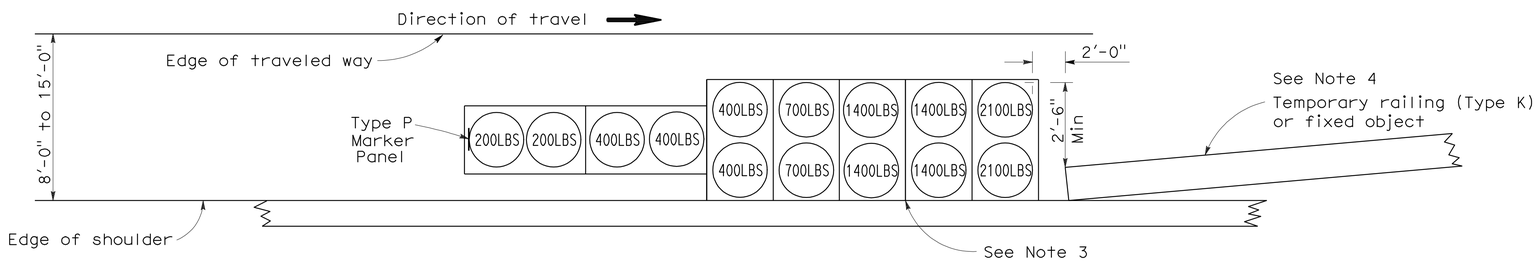

ARRAY 'TS14'

Approach speed 45 mph or more
See Note 9

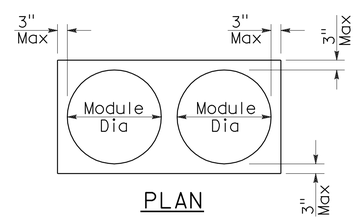

PLAN

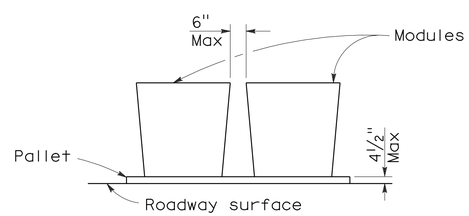

ELEVATION

CRASH CUSHION PALLET DETAIL

See Note 11

NOTES:

1. (XXX) Indicates sand filled module location and weight of sand in pounds for each module. Module spacing is based on the greater diameter of the module.
2. All sand weights are nominal.
3. The temporary crash cushion arrays shown on this plan shall be used only in locations where there will be traffic on one side of the temporary crash cushion array.
4. If the fixed object or approach end of the temporary railing is less than 15'-0" from the edge of traveled way, a temporary crash cushion is required in a construction or work zone.
5. Temporary crash cushion arrays shall not encroach on the traveled way.
6. Arrays for median shoulders shall conform to details shown on this plan for outside shoulders.
7. Place the Type P marker panel so that the bottom of the panel rests upon the pallet and faces traffic.
8. Refer to Standard Plan A73B for marker details.
9. For shoulder widths less than 8'-0", appropriate approved crash cushion protection, other than sand filled modules, shall be provided at fixed objects and at approach ends of temporary railing. The specific type of crash cushion shall be as shown on the project plans or as specified in the Special Provisions, or if not shown on the project plans or specified in the Special Provisions, shall be as approved by the Engineer.
10. Approach speeds indicated conform to NCHRP 350 Report criteria.
11. Use of pallets is optional.

STATE OF CALIFORNIA
DEPARTMENT OF TRANSPORTATION

TEMPORARY CRASH CUSHION, SAND FILLED (SHOULDER INSTALLATIONS)

NO SCALE

RSP T2 DATED JUNE 6, 2008 SUPERSEDES STANDARD PLAN T2
DATED MAY 1, 2006 - PAGE 213 OF THE STANDARD PLANS BOOK DATED MAY 2006.

REVISED STANDARD PLAN RSP T2

2006 REVISED STANDARD PLAN RSP T2

5-15-08

DIST	COUNTY	ROUTE	POST MILES TOTAL PROJECT	SHEET NO.	TOTAL SHEETS
03	Sac	50,51,80, 99,104	Var	20	26

REGISTERED ELECTRICAL ENGINEER

October 5, 2007
PLANS APPROVAL DATE

REGISTERED PROFESSIONAL ENGINEER Jeffery G. McRae No. E14512 Exp. 6-30-08 ELECTRICAL STATE OF CALIFORNIA

The State of California or its officers or agents shall not be responsible for the accuracy or completeness of electronic copies of this plan sheet.

To accompany plans dated 10-19-09

2006 REVISED STANDARD PLAN RSP ES-1A

ELECTROLIERS

STANDARD TYPES
15, 15D
15 STRUCTURE
21, 21D STRUCTURE
30
31
32
35
36-20A

High mast light pole

Double Arm lighting standard

Existing electrolier

Electrolier foundation (Future installation)

NOTES:

1. Luminaires shall be 310 W HPS when installed on Type 21, 21D, 30, 31, 32, 35 and 36-20A Standards, unless otherwise specified. Luminaires shall be 200 W HPS when installed on other type standards or poles, unless otherwise specified.
2. Luminaires shall be the cutoff type, ANSI Type III medium cutoff lighting distribution, unless otherwise specified.
3. Variations noted adjacent to symbol on project plans.

Electrolier (see project notes or project plans)

Luminaire on wood pole

STANDARD NOTES:

- AB — Abandon. If applied to conduit, remove conductors.
- BC — Install pull box in existing conduit run.
- BP — Pedestrian barricade, type as indicated on plan.
- CB — Install conduit into existing pull box.
- CC — Connect new and existing conduit. Remove existing conductors and install conductors as indicated.
- CF — Conduit to remain for future use. Remove conductors. Install pull wire or rope.
- DH — Detector handhole.
- FA — Foundation to be abandoned.
- IS — Install sign on signal mast arm.
- NS — No slip base on standard.
- PEC — Photoelectric control.
- PEU — Photoelectric unit.
- RC — Equipment or material to be removed and become the property of the Contractor.
- RE — Remove electrolier, fuses and ballast. Tape ends of conductors.
- RL — Relocate equipment.
- RR — Remove and reuse equipment.
- RS — Remove and salvage equipment.
- SC — Splice new to existing conductors.
- SD — Service disconnect.
- SF — Standard to remain for future use. Remove luminaire, pole conductors, fuses and ballast.
- TSP — Telephone service point.

ABBREVIATIONS AND EQUIPMENT DESIGNATIONS

PROPOSED	EXISTING	
BBS	bbs	Battery backup system
BC	bc	Bolt circle
C	C	Conduit
CCTV	cctv	Closed circuit television
CKT	ckt	Circuit
CMS	cms	Changeable message sign
DLC	dlc	Loop detector lead-in cable
EMS	ems	Extinguishable message sign
EVC	evc	Emergency vehicle cable
EVD	evd	Emergency vehicle detector
FB	fb	Flashing beacon
FBCA	fbca	Flashing beacon control assembly
FBS	fbs	Flashing beacon with slip base
FO	fo	Fiber optic
G	G	Ground (Equipment Grounding Conductor)
GFCI	GFCI	Ground fault circuit interrupt
HAR	har	Highway advisory radio
HEX	hex	Hexagonal
HPS	hps	High pressure sodium
IISNS	iisns	Internally illuminated street name sign
ISL	isl	Induction sign lighting
LED	led	Light emitting diode
LMA	lma	Luminaire mast arm
LPS	lps	Low pressure sodium
LTG	ltg	Lighting
LUM	lum	Luminaire
MAT	mat	Mast arm mounting vehicle signal faces, top attachment
MAS	mas	Mast arm mounting vehicle signal faces, side attachment
MAS-4A	mas-4A	Mast arm mounting vehicle signal faces, side attachment - 4 signal section
MAS-4B	mas-4B	
MAS-4C	mas-4C	
MAS-5A	mas-5A	Mast arm mounting vehicle signal faces, side attachment - 5 signal section
MAS-5B	mas-5B	
MC	mc	Mercury contactor
M/M	m/m	Multiple to multiple transformer
MT	mt	Conduit with pull wire or rope only
MTG	mtg	Mounting
	mv	Mercury vapor lighting fixture
N	N	Neutral (Grounded Conductor)
NC	NC	Normally closed
NO	NO	Normally open
PB	pb	Pull box
PEC	pec	Photoelectric control (Type I, II, III, IV or V as shown)
PED	ped	Pedestrian
PEU	peu	Photoelectric unit
PPB	ppb	Pedestrian push button
RL		Relocated equipment
RM	rm	Ramp metering
SB	sb	Slip base
SIC	sic	Signal interconnect cable
SIG	sig	Signal
SMA	sma	Signal mast arm
SNS	sns	Street name sign
SP	sp	Service point
TDC	tdc	Telephone demarcation cabinet
TMS	tms	Traffic monitoring station
TOS	tos	Traffic Operations System
VEH	veh	Vehicle
XFMR	xfmr	Transformer
COMM	comm	Communication
RWIS	rwis	Roadway weather information system

SOFFIT AND WALL MOUNTED LUMINAIRES

Pendant, 70 W HPS unless otherwise specified.

Flush, 70 W HPS unless otherwise specified.

Wall surface, 70 W HPS unless otherwise specified.

Existing soffit or wall luminaire to remain unmodified.

Existing soffit or wall luminaire to be modified as specified.

NOTE:

Arrow indicates "street side" of luminaire.

STATE OF CALIFORNIA
DEPARTMENT OF TRANSPORTATION

ELECTRICAL SYSTEMS (SYMBOLS AND ABBREVIATIONS)

NO SCALE

RSP ES-1A DATED OCTOBER 5, 2007 SUPERSEDES STANDARD PLAN ES-1A DATED MAY 1, 2006 - PAGE 400 OF THE STANDARD PLANS BOOK DATED MAY 2006.

REVISED STANDARD PLAN RSP ES-1A

DIST	COUNTY	ROUTE	POST MILES TOTAL PROJECT	SHEET NO.	TOTAL SHEETS
03	Sac	50,51,80, 99,104	Var	21	26

REGISTERED ELECTRICAL ENGINEER

October 5, 2007
PLANS APPROVAL DATE

REGISTERED PROFESSIONAL ENGINEER Jeffery G. McRae No. E14512 Exp. 6-30-08 ELECTRICAL STATE OF CALIFORNIA

The State of California or its officers or agents shall not be responsible for the accuracy or completeness of electronic copies of this plan sheet.

To accompany plans dated 10-19-09

CONDUIT

PROPOSED	EXISTING	
		Lighting Conduit, unless otherwise indicated or noted
		Traffic signal conduit
C	c	Communication conduit
T	t	Telephone conduit
F	f	Fire alarm conduit
FO	fo	Fiber optic conduit
		Conduit termination (RSP ES-9A C)
R	r	Conduit riser in/on structure or service pole

SERVICE EQUIPMENT

PROPOSED	EXISTING	
OH	oh	Overhead lines
U	U	Wood pole "U" indicates utility owned
		Pole guy with anchor
		Utility transformer - ground mounted
III		Service equipment enclosure type
		Service equipment enclosure door indicates front of enclosure
T	t	Telephone demarcation cabinet

POLE-MOUNTED SERVICE DESIGNATION

Type of installation

TYPE H SERVICE - 28'-10" ← Pole height above grade

ILLUMINATED OVERHEAD SIGN

PROPOSED	EXISTING	
		Overhead sign - Single post
		Overhead sign - Two post
		Overhead sign - Mounted on structure
		Overhead sign with electrolier

SIGNAL EQUIPMENT

PROPOSED	EXISTING	
		Pedestrian signal face
		Pedestrian push button post
		Pedestrian barricade
		Vehicle signal face (with backplate, 3-Section: red, yellow and green)
		Vehicle signal face with angle visors
PV	PV	Modifications of basic symbols: "L" indicates all non-arrow sections louvered "LG" indicates louvered green section only "PV" indicates 12" programmed visibility sections "8" indicates all 8" sections (only when specified)
		Type 15TS and Vehicle signal face
		Vehicle signal face with red, yellow and green left arrow sections
		Vehicle signal face with red and yellow sections and up green arrow
		Vehicle signal face (5 Section) with red, yellow and green sections and yellow and green right arrows
		Type 1 Standard and attached vehicle signal faces
		Standard with signal mast arm only and attached vehicle signal faces and internally illuminated street name sign
		Type 33 Standard, Left-turn vehicle signal face and sign
		Standard with luminaire and signal mast arms and attached vehicle signal faces
		Cantilever flashing beacon Type 9 Frame, with a sign unless otherwise specified or indicated
		Type 15-FBS Standard with two vehicle signal face sections with lens, backplate and visor with a sign
R	Y	Flashing beacon. One vehicle signal face section with lens, backplate and visor. "R" indicates red indication, "Y" indicates yellow indication
		Controller assembly. Door indicates front of cabinet

SIGNAL EQUIPMENT Cont

PROPOSED	EXISTING	
		Guard post
		Type 1 Standard with "Meter On" sign
		Emergency Vehicle detector

NOTES:

1. All signal sections shall be 12" unless shown otherwise.
2. Signal heads shall be provided with backplates unless shown otherwise.
3. Signal indication shall be LED.

STATE OF CALIFORNIA
DEPARTMENT OF TRANSPORTATION

ELECTRICAL SYSTEMS (SYMBOLS AND ABBREVIATIONS)

NO SCALE

RSP ES-1B DATED OCTOBER 5, 2007 SUPERCEDES STANDARD PLAN ES-1B DATED MAY 1, 2006 - PAGE 401 OF THE STANDARD PLANS BOOK DATED MAY 2006.

REVISED STANDARD PLAN RSP ES-1B

2006 REVISED STANDARD PLAN RSP ES-1B

7-10-07

DIST	COUNTY	ROUTE	POST MILES TOTAL PROJECT	SHEET NO.	TOTAL SHEETS
03	Sac	50,51,80, 99,104	Var	22	26

REGISTERED ELECTRICAL ENGINEER

October 5, 2007
PLANS APPROVAL DATE

REGISTERED PROFESSIONAL ENGINEER Jeffery G. McRae No. E14512 Exp. 6-30-08 ELECTRICAL STATE OF CALIFORNIA

The State of California or its officers or agents shall not be responsible for the accuracy or completeness of electronic copies of this plan sheet.

To accompany plans dated 10-19-09

EQUIPMENT IDENTIFICATION

ILLUMINATED SIGN IDENTIFICATION NUMBER:

Sign No. 12345
10 ISL SCI 1.0

- Sign number - Place on post or structure
- Transformer rating (kVA)
- Lighting control type
- Number and type of fixtures

Do NOT place on standard or structure

ELECTROLIER OR EQUIPMENT IDENTIFICATION NUMBER:

12345 - 15'-0"

- Mast arm length, if shown. Do not place on standard or structure.
- Equipment number - Place on standard or structure. Existing equipment numbers are shown in parenthesis

CONDUIT AND CONDUCTOR IDENTIFICATION:

1½"C, 2#10, 15#14, 2 DLC

- Number and size of conductors and cables
- Size of conduit in inches

Ø1, Ø2, Ø2P, etc.	Traffic phase identification for signal faces, detectors and phase diagrams
1 2 3	Project note numbers
A B C	Equipment description, installation or item numbers
1 2 3	Conduit run numbers

SIGNAL AND LIGHTING STANDARD (TYPICAL DESIGNATION):

19A - 3 - 100

- Wind velocity = 100 mph
- Case 3 arm loading
- Standard type
- Standard Plan sheet number
- Detail number or letter

MISCELLANEOUS EQUIPMENT

PROPOSED	EXISTING	
CMS	cms	Changeable message sign
		Closed circuit television camera
		Highway advisory radio pole and antenna
EMS	ems	Extinguishable message sign
M V	m v	Detection device M = Microwave sensor V = Video image sensor

WIRING DIAGRAM LEGEND

P	Pole
CB	Circuit breaker
A	Ampere
V	Volt
M	Metered
UM	Unmetered
NB	Neutral bus
GB	Ground bus
G	Equipment grounding conductor
N	Grounded conductor (Neutral)

- External conductor
- Conductor or bus
- Tie point
- Contactor coil
- Contactor, Contact NO
- Terminal blocks
- Contactor, Contact NC
- Enclosure bond
- Grounding electrode
- Circuit breaker
- Receptacle

PULL BOXES

PROPOSED EXISTING

Pull box-No. 5 unless otherwise indicated or noted.

3 9A(21)

Pull box-Additional designations or descriptions

3	= No. 3½ pull box
5	= No. 5 pull box
6	= No. 6 pull box
7	= No. 7 (Ceiling pull box)
8	= No. 8 (Pendant soffit pull box)
9	= No. 9 pull box
9A	= No. 9A pull box

(C) = Communications pull box
(E) = Pull box with extension
(S) = Sprinkler control pull box
(21) = Anchor bolts and conduit for future installation of Type 21 Standard
(T) = Traffic pull box

VEHICLE DETECTORS

5 J 9 U

- Vehicle detector designation
- U = Upper
- L = Lower
- Slot number in input file
- Input file (I or J)
- Phase

PROPOSED EXISTING

	Type A detector loop. Outline of sawcut shown.
	Type B detector loop. Outline of sawcut shown.
	Type C detector loop. Outline of sawcut shown.
	Type D detector loop. Outline of sawcut shown.
	Type E detector loop. Outline of sawcut shown.
	Type Q detector loop. Outline of sawcut shown.
	Magnetic detector
DH dh	Detector handhole
	Microwave or video detection zone

STATE OF CALIFORNIA
DEPARTMENT OF TRANSPORTATION

ELECTRICAL SYSTEMS (SYMBOLS AND ABBREVIATIONS)

NO SCALE

RSP ES-1C DATED OCTOBER 5, 2007 SUPERCEDES STANDARD PLAN ES-1C DATED MAY 1, 2006 - PAGE 402 OF THE STANDARD PLANS BOOK DATED MAY 2006.

REVISED STANDARD PLAN RSP ES-1C

2006 REVISED STANDARD PLAN RSP ES-1C

DIST	COUNTY	ROUTE	POST MILES TOTAL PROJECT	SHEET NO.	TOTAL SHEETS
03	Sac	50,51,80, 99,104	Var	23	26

REGISTERED ELECTRICAL ENGINEER

October 5, 2007
PLANS APPROVAL DATE

REGISTERED PROFESSIONAL ENGINEER Jeffery G. McRae No. E14512 Exp. 6-30-08 ELECTRICAL STATE OF CALIFORNIA

The State of California or its officers or agents shall not be responsible for the accuracy or completeness of electronic copies of this plan sheet.

To accompany plans dated 10-19-09

LOOP INSTALLATION PROCEDURE

1. Loops shall be centered in lanes.
2. Saw slots in pavement for loop conductors as shown in details.
3. Distance between side of loop and a lead-in saw cut from adjacent detectors shall be 2'-0" minimum. Distance between lead-in saw cuts shall be 6" minimum.
4. Bottom of saw slot shall be smooth with no sharp edges.
5. Slots shall be washed until clean, blown out and thoroughly dried before installing loop conductors.
6. Adjacent loops on the same sensor unit channel shall be wound in opposite directions.
7. Identify and tag loop circuit pairs in the pull box with loop number, start (S) and finish (F) of conductor. Identify and tag lead-in-cable with sensor number and phase.
8. Install loop conductor in slot using a 3/16" to 1/4" thick wood paddle. Hold loop conductors with wood paddles (at the bottom of the sawed slot) during sealant placement.
9. No more than 2 twisted pairs shall be installed in one sawed slot.
10. Allow additional 5'-0" of slack length of conductor for the lead-in run to pull box.
11. The additional length of each conductor for each loop shall be twisted together into a pair (6 turns per 3'-4" minimum) before being placed in the slot and conduit leading to pull box.
12. Test each loop circuit for continuity, circuit resistance and insulation resistance at the pull box before filling slots.
13. Fill slots as shown in details.
14. Splice loop conductors to lead-in-cable. Splices shall be soldered.
15. End of lead-in-cable and Type 2 loop conductor shall be waterproofed prior to installing in conduit to prevent moisture from entering the cable.
16. Lead-in-cable shall not be spliced between the pull box and the controller cabinet terminals.
17. Test each loop circuit for continuity, circuit resistance and insulation resistance at the controller cabinet location.
18. Where loop conductors are not to be spliced to a lead-in-cable, the ends of the conductors shall be taped and waterproofed with electrical insulating coating.

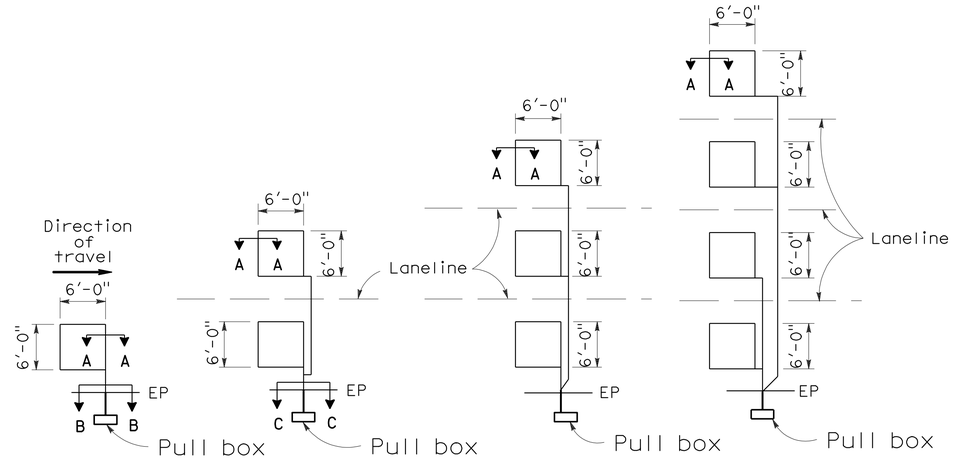

TYPE 1A INSTALLATION | TYPE 2A INSTALLATION | TYPE 3A INSTALLATION | TYPE 4A INSTALLATION

SAWCUT DETAILS

(Type A loop detector configurations illustrated)

1. 1A thru 4A = 1 Type A loop configuration in each lane.
2. 1B thru 4B = 1 Type B loop configuration in each lane.
3. 1C = 1 Type C loop configuration entering lanes as required.
4. 1D thru 4D = 1 Type D loop configuration in each lane.
5. 1E thru 4E = 1 Type E loop configuration in each lane.
6. 1Q thru 4Q = 1 Type Q loop configuration in each lane. (Use Type A, B, C, D, E or Q loop detector configurations only when specified or shown on plans)

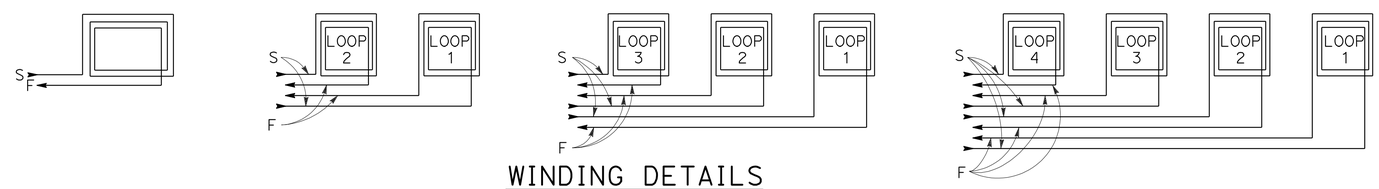

WINDING DETAILS

See Notes 6 and 7

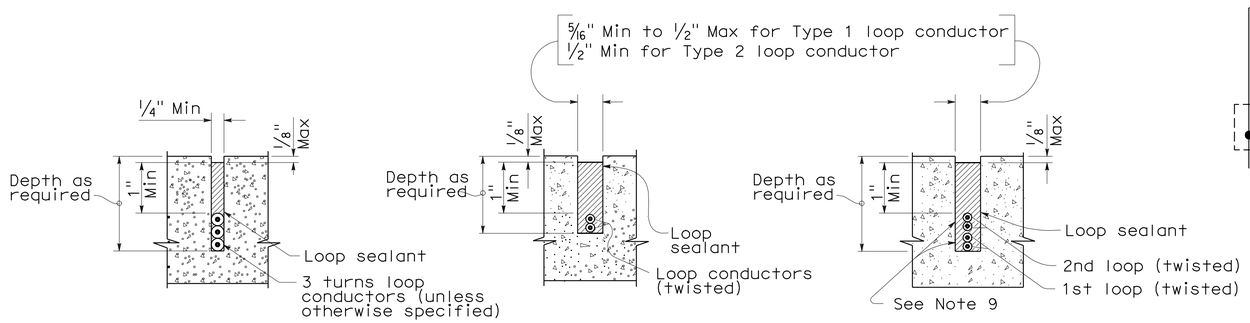

SECTION A-A | SECTION B-B | SECTION C-C

SLOT DETAILS - TYPE 1 AND TYPE 2 LOOP CONDUCTOR

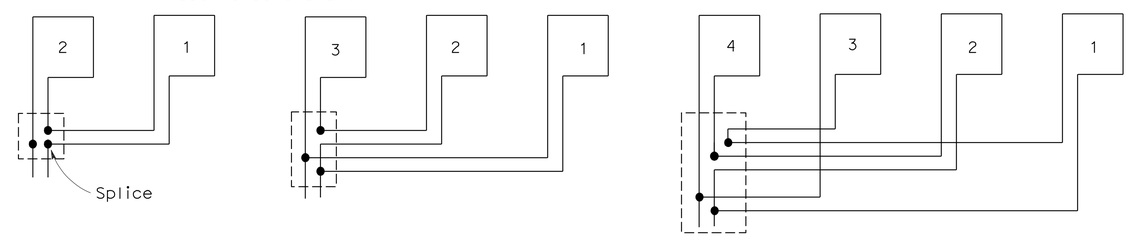

TYPICAL LOOP CONNECTIONS

(Dashed lines represent the pull box)

STATE OF CALIFORNIA
DEPARTMENT OF TRANSPORTATION

ELECTRICAL SYSTEMS (DETECTORS)

NO SCALE

RSP ES-5A DATED OCTOBER 5, 2007 SUPERCEDES STANDARD PLAN ES-5A DATED MAY 1, 2006 - PAGE 423 OF THE STANDARD PLANS BOOK DATED MAY 2006.

REVISED STANDARD PLAN RSP ES-5A

2006 REVISED STANDARD PLAN RSP ES-5A

8-17-07

DIST	COUNTY	ROUTE	POST MILES TOTAL PROJECT	SHEET No	TOTAL SHEETS
03	Sac	50,51,80, 99,104	Var	24	26

REGISTERED CIVIL ENGINEER — DATE 09/14/2009

10-19-09
PLANS APPROVAL DATE

The State of California or its officers or agents shall not be responsible for the accuracy or completeness of electronic copies of this plan sheet.

REGISTERED PROFESSIONAL ENGINEER — Henry Fang — No. 56541 — Exp. 6/30/11 — CIVIL — STATE OF CALIFORNIA

INDEX TO PLANS

1. GENERAL PLAN
2. MISCELLANEOUS DETAILS
3. JOINT SEALS (MAX MOVEMENT RATING = 2")

STANDARD PLANS DATED MAY 2006

A10A	ACRONYMS AND ABBREVIATIONS (A-L)
A10B	ACRONYMS AND ABBREVIATIONS (M-Z)

STANDARD PLAN SHEET No.

DETAIL No.

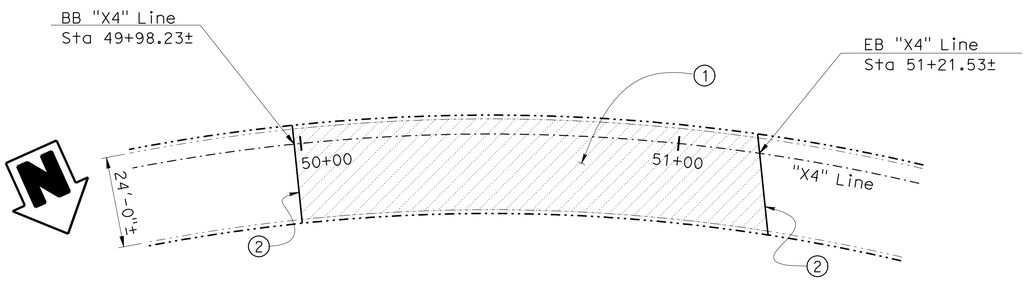

W50 - N51 CONNECTOR OC

Br No. 24-0227F, Sac, Rte 80, PM R0.1/R0.4
SCALE: 1" = 20'-0"

QUANTITIES

W50-N51 CONNECTOR OC	Br No. 24-0227F	
REMOVE ASPHALT CONCRETE SURFACING	2,959	SQFT
REMOVE UNSOUND CONCRETE	8	CF
CLEAN BRIDGE DECK	2,959	SQFT
HOT MIX ASPHALT (OPEN GRADED)	21	TON
CLEAN EXPANSION JOINT	49	LF
RAPID SETTING CONCRETE (PATCH)	8	CF
POLYESTER CONCRETE EXPANSION DAM	10	CF
JOINT SEAL (MR 1/2")	49	LF
TREAT BRIDGE DECK	2,959	SQFT
FURNISH BRIDGE DECK TREATMENT MATERIAL	33	GAL
PUBLIC SAFETY PLAN	LUMP	SUM

S51-E50 CONNECTOR OC	BR NO.24-0233F	
REMOVE ASPHALT CONCRETE SURFACING	22,700	SQFT
REMOVE UNSOUND CONCRETE	57	CF
CLEAN BRIDGE DECK	22,700	SQFT
HOT MIX ASPHALT (OPEN GRADED)	159	TON
CLEAN EXPANSION JOINT	128	LF
RAPID SETTING CONCRETE (PATCH)	57	CF
POLYESTER CONCRETE EXPANSION DAM	26	CF
JOINT SEAL (MR 1/2")	64	LF
JOINT SEAL (MR 2")	64	LF
TREAT BRIDGE DECK	22,700	SQFT
FURNISH BRIDGE DECK TREATMENT MATERIAL	252	GAL
PUBLIC SAFETY PLAN	LUMP	SUM

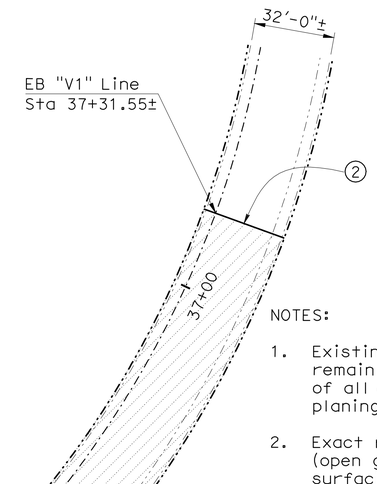

S51 - E50 CONNECTOR OC

Br No. 24-0233F, Sac, Rte 80, PM R1.5/R2.9
SCALE: 1" = 30'-0"

NOTES:

1. Existing drainage facilities shall remain operational and left clean of all debris from paving and cold planing operations.
2. Exact replace Hot Mix Asphalt (open graded) and remove AC surfacing limits shall be determined by the Engineer.
3. Hot Mix Asphalt (open graded) shall be paved to the face of bridge barrier except around deck drains. Hot Mix Asphalt (open graded) shall be tapered into deck drains as directed by the Engineer.

NOTES:

(1) Bridge Deck Treatment
- Remove existing Asphalt Concrete Surfacing.
- Clean and treat entire bridge with Methacrylate.
- Remove unsound concrete and patch with rapid setting concrete.
- Place new Hot Mix Asphalt (open graded) (1.2")
- See Bridge Deck Repair Detail on "Miscellaneous Details" sheet

(2) Remove, clean & replace existing Joint Seal and Polyester Concrete Expansion Dam. See Joint Seal Table on "Miscellaneous Details" sheet

LEGEND:

Remove existing Asphalt Concrete Surfacing

Indicate existing structure

NOTE:
THE CONTRACTOR SHALL VERIFY ALL CONTROLLING FIELD DIMENSIONS BEFORE ORDERING OR FABRICATING ANY MATERIAL.

X DESIGN ENGINEER	DESIGN	BY H. Fang	CHECKED M. Quach	SERVICE LOAD DESIGN		
	DETAILS	BY A. Chen	CHECKED M. Quach	LAYOUT	BY H. Fang	CHECKED M. Quach
	QUANTITIES	BY H. Fang	CHECKED M. Quach	SPECIFICATIONS	BY XiaHong. Li	PLANS AND SPECS COMPARED

STATE OF CALIFORNIA
DEPARTMENT OF TRANSPORTATION

DIVISION OF ENGINEERING SERVICES
STRUCTURE DESIGN
DESIGN BRANCH 5

BRIDGE NO. Various
POST MILE Various

SR50 & SR51 BRIDGES - HMA OVERLAY AND JOINT SEAL REPLACEMENT

GENERAL PLAN

STRUCTURES DESIGN GENERAL PLAN SHEET (ENGLISH) (REV. 10/25/05)

ORIGINAL SCALE IN INCHES FOR REDUCED PLANS 0 1 2 3

CU 03
EA 0F5201

DISREGARD PRINTS BEARING EARLIER REVISION DATES

REVISION DATES: 5-28-09 9-15-09

SHEET 1 OF 3

FILE => 0f5201-a-gp.dgn

STRUCTURES DESIGN GENERAL PLAN SHEET (ENGLISH) (REV.07-24-06)

USERNAME => trmikest DATE PLOTTED => 22-OCT-2009 TIME PLOTTED => 06:30

DIST	COUNTY	ROUTE	POST MILES TOTAL PROJECT	SHEET No	TOTAL SHEETS
03	Sac	50,51,80, 99,104	Var	25	26

REGISTERED CIVIL ENGINEER — DATE 09/14/2009

10-19-09
PLANS APPROVAL DATE

The State of California or its officers or agents shall not be responsible for the accuracy or completeness of electronic copies of this plan sheet.

REGISTERED PROFESSIONAL ENGINEER — Henry Fang No. 56541 Exp. 6/30/11 CIVIL — STATE OF CALIFORNIA

DECK REPAIR TABLE

REMOVE UNSOUND CONCRETE
AND PATCH WITH RAPID SETTING CONCRETE

BRIDGE NAME	BRIDGE NUMBER	APPROXIMATE AREA DAMAGED (percent)	APPROXIMATE DEPTH (in)
W50 - N51 CONNECTOR OC	24-0227F	1	3
S51 - E50 CONNECTOR OC	24-0233F	1	3

Locations to be determined by the Engineer.
For details see "BRIDGE DECK REPAIR DETAIL".

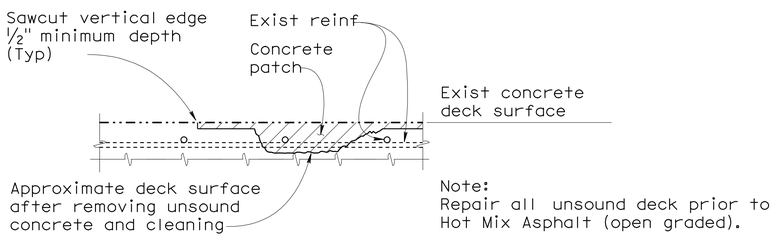

Note:
Repair all unsound deck prior to Hot Mix Asphalt (open graded).

BRIDGE DECK REPAIR DETAIL

NOTE: Reinforcement may be encountered during deck concrete removal.

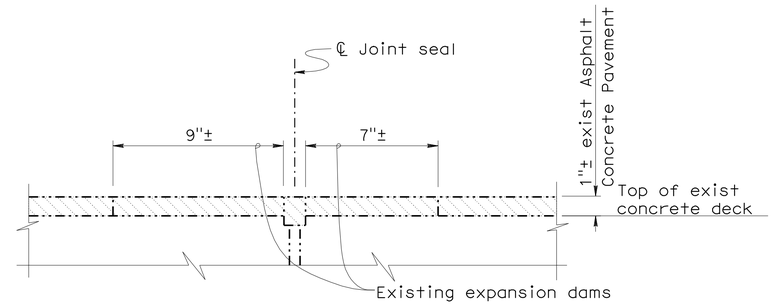

EXISTING

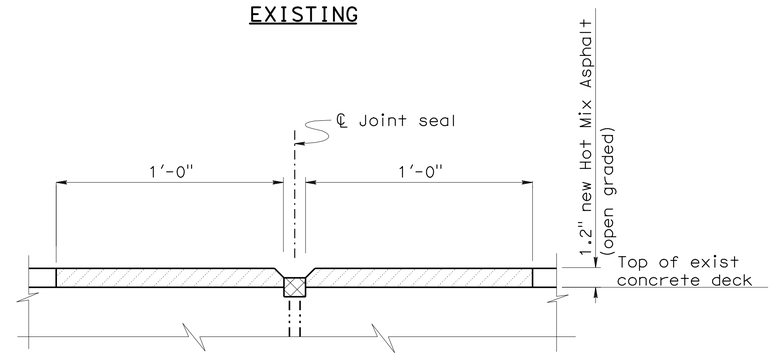

RECONSTRUCTION

EXPANSION DAM DETAIL

SCALE: 3" = 1'-0"

LEGEND:

- Indicates limits of new Polyester Concrete Expansion Dams
- Indicates limits of existing Joint Seal, Polyester Concrete Expansion Dam and Asphalt Concrete Surfacing removal
- Indicate existing structure

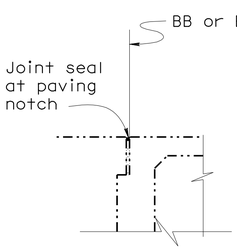

ABUTMENT

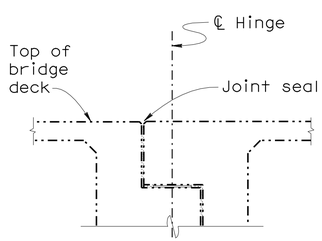

HINGE OR EXPANSION JOINT

JOINT SEAL LOCATION

NOTE:
THE CONTRACTOR SHALL VERIFY ALL CONTROLLING FIELD DIMENSIONS BEFORE ORDERING OR FABRICATING ANY MATERIAL.

JOINT SEAL TABLE

BRIDGE NAME	BRIDGE NUMBER	LOCATION	MINIMUM "MR" (in)	APPROXIMATE LENGTH (ft)	EXISTING WATERSTOP	APPROX DEPTH TO CLEAN EXPANSION JOINT (in)
W50 - N51 CONNECTOR OC	24-0227F	Abut 1	½	24.00	No	12
		Abut 2	½	24.89	No	12
S51 - E50 CONNECTOR OC	24-0233F	Abut 1	½	32.00	No	12
		Hinge 1	2	32.00	No	12
		Hinge 2	2	32.00	No	12
		Abut 8	½	32.00	No	12

DESIGN	BY H. Fang	CHECKED M. Quach	
DETAILS	BY A. Chen	CHECKED M. Quach	
QUANTITIES	BY H. Fang	CHECKED M. Quach	

STATE OF CALIFORNIA
DEPARTMENT OF TRANSPORTATION

DIVISION OF ENGINEERING SERVICES
STRUCTURE DESIGN
DESIGN BRANCH 5

BRIDGE NO. Various
POST MILE Various

SR50 & SR51 BRIDGES - HMA OVERLAY AND JOINT SEAL REPLACEMENT

MISCELLANEOUS DETAILS

STRUCTURES DESIGN DETAIL SHEET (ENGLISH) (REV. 10/25/05)

ORIGINAL SCALE IN INCHES FOR REDUCED PLANS 0 1 2 3

CU 03
EA 0F5201

DISREGARD PRINTS BEARING EARLIER REVISION DATES — 5-28-09 6-16-09 9-15-09

REVISION DATES

SHEET 2 OF 3

FILE => 0f5201-n-misdt.dgn

USERNAME => ttmikes1 DATE PLOTTED => 22-OCT-2009 TIME PLOTTED => 06:31

DIST	COUNTY	ROUTE	POST MILES TOTAL PROJECT	SHEET No	TOTAL SHEETS
03	Sac	50,51,80, 99,104	Var	26	26

REGISTERED CIVIL ENGINEER 09/14/2009 DATE

10-19-09
PLANS APPROVAL DATE

The State of California or its officers or agents shall not be responsible for the accuracy or completeness of electronic copies of this plan sheet.

REGISTERED PROFESSIONAL ENGINEER Henry Fang No. 56541 Exp. 6/30/11 CIVIL STATE OF CALIFORNIA

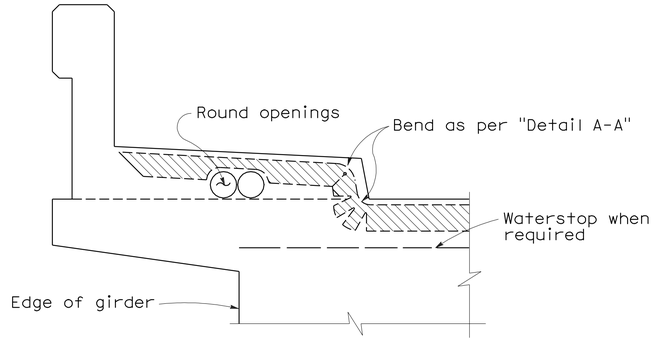

Note: Type "B" seal shown. Type "A" seals to comform to the general path of seal shown, cuts for bending not required. Bend Type "A" seals 3" up into curb or barrier rail on only the low end of the seal.

CONCRETE BARRIER AND SIDEWALK

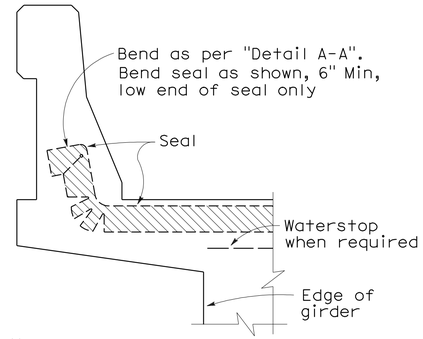

CONCRETE BARRIER

JOINT SEAL DETAILS

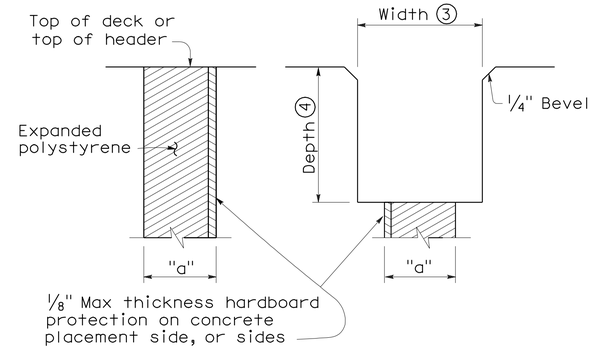

FORMING DETAIL SAWCUT DETAIL

NOTE:
THE CONTRACTOR SHALL VERIFY ALL CONTROLLING FIELD DIMENSIONS BEFORE ORDERING OR FABRICATING ANY MATERIAL.

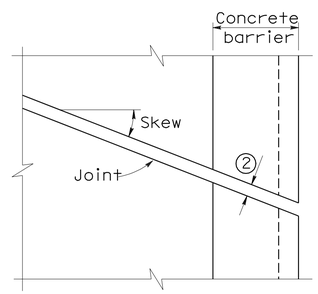

PLAN OF JOINT (SKEW ≤ 20°)

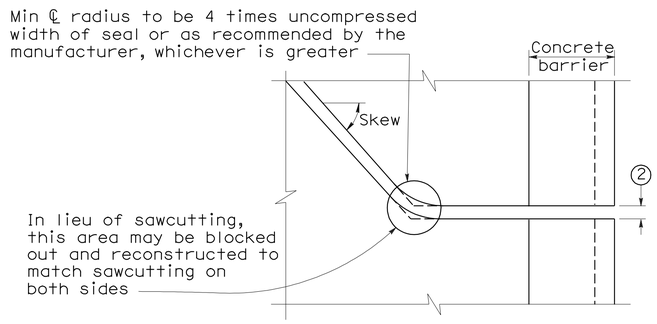

PLAN OF JOINT (SKEW > 20°)

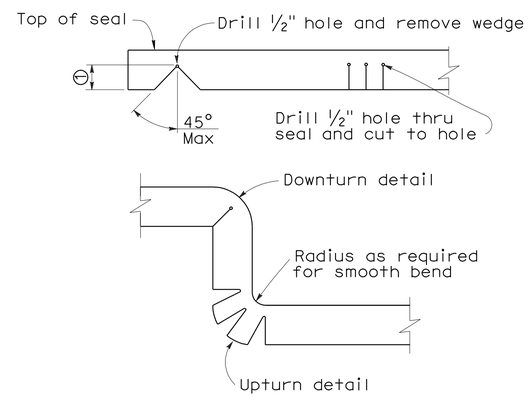

DETAIL A-A

NOTES:

① Make smooth cuts from the bottom of seal to 1½" clear of top leaving at least one complete cell between the top of the cut and top of the seal. When necessary cut back of seal to clear conduit and round openings.

② Opening in barrier to match width of sawn deck joint.

③ Sawcut groove widths shall be as ordered by the Engineer.

④ Depth of sawcut: Type A - Depth to be 1½" minimum.
Type B - Depth to be equal to or greater than the depth of seal measured along the contact surface, when compressed to minimum width position (W_2) plus dimensions shown.

⑤ MR (movement rating) as shown on other plan sheets.

⑥ Other depths must be approved by the Engineer.

DIMENSIONS "a" OF JOINT REQUIRED

Movement Rating (MR) ⑤	Bridge Type	"a" Dimension Deck Concrete Placed		
		Winter	Fall-Spring	Summer
2"	All except CIP/PS	1½"	1¼"	¾"
	CIP/PS	1¼"	1"	½"
1½"	All except CIP/PS	1¼"	1"	½"
	CIP/PS	1"	¾"	½"
1"	All except CIP/PS	1"	¾"	½"
	CIP/PS	¾"	½"	½"
½"	All except CIP/PS	¾"	¾"	½"
	CIP/PS	½"	½"	½"

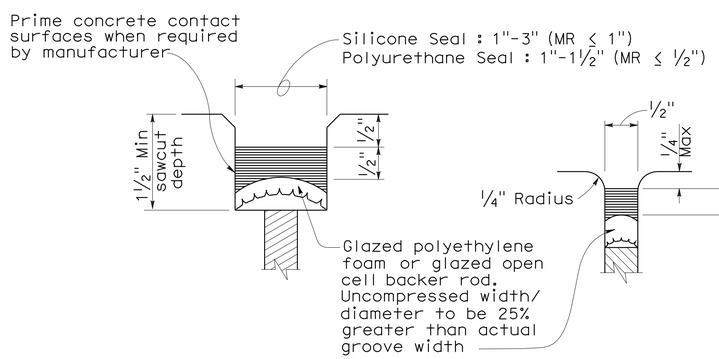

TYPE A SEAL

Movement rating : Polyurethane = ½" Max
Silicone = 1" Max

TYPE AL SEAL

Longitudinal joints only

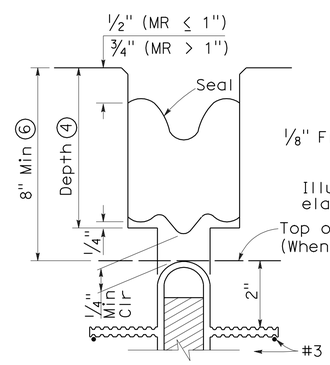

TYPE B JOINT SEAL
IN MINIMUM WIDTH POSITION (W_2)

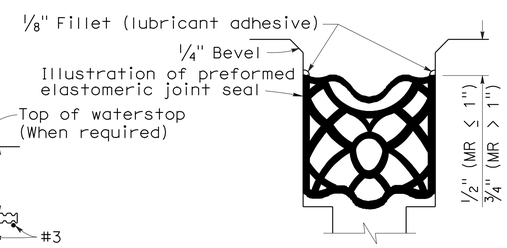

TYPE B SEAL

NO SCALE

DESIGN	BY H. Fang	CHECKED M. Quach	
DETAILS	BY A. Chen	CHECKED M. Quach	
QUANTITIES	BY H. Fang	CHECKED M. Quach	

STATE OF CALIFORNIA
DEPARTMENT OF TRANSPORTATION

DIVISION OF ENGINEERING SERVICES
STRUCTURE DESIGN
DESIGN BRANCH 5

CU 03
EA 0F5201

BRIDGE NO. Various
POST MILE Various

SR50 & SR51 BRIDGES - HMA OVERLAY AND JOINT SEAL REPLACEMENT

JOINT SEALS (MAXIMUM MOVEMENT RATING = 2")

STRUCTURES DESIGN DETAIL SHEET (ENGLISH) (REV. 10/25/05)

ORIGINAL SCALE IN INCHES FOR REDUCED PLANS 0 1 2 3

DISREGARD PRINTS BEARING EARLIER REVISION DATES 5-28-09

REVISION DATES

SHEET 3 OF 3

FILE => 0f5201-q-jntseal.dgn

USERNAME => trmikest DATE PLOTTED => 22-OCT-2009 TIME PLOTTED => 06:31