ACNH-P050(128)E

Dist	COUNTY	ROUTE	POST MILES TOTAL PROJECT	SHEET No.	TOTAL SHEETS
03	ED	50	78.9/79.5	1	78

STATE OF CALIFORNIA
DEPARTMENT OF TRANSPORTATION

PROJECT PLANS FOR CONSTRUCTION ON
STATE HIGHWAY

IN EL DORADO COUNTY
IN SOUTH LAKE TAHOE
FROM 0.2 MILE WEST OF SKI RUN BOULEVARD
TO WILDWOOD AVENUE

TO BE SUPPLEMENTED BY STANDARD PLANS DATED MAY 2006

INDEX OF PLANS

SHEET No.	DESCRIPTION
1	TITLE AND LOCATION MAP
2	TYPICAL CROSS SECTIONS
3-6	LAYOUTS
7	PROFILES
8-10	CONSTRUCTION DETAILS
11-29	DRAINAGE PLANS, PROFILES, DETAILS AND QUANTITIES
30-34	UTILITY PLANS AND DETAILS
35	CONSTRUCTION AREA SIGNS
36-37	STAGE CONSTRUCTION PLANS
38-42	PAVEMENT DELINEATION PLANS, DETAILS AND QUANTITIES
43-44	SUMMARY OF QUANTITIES
45-50	ELECTRICAL PLANS
51-55	SIGNAL AND LIGHTING (TEMPORARY)
56-78	REVISED AND NEW STANDARD PLANS

THE STANDARD PLANS LIST APPLICABLE TO THIS CONTRACT IS INCLUDED IN THE NOTICE TO BIDDERS AND SPECIAL PROVISIONS BOOK.

LOCATION MAP

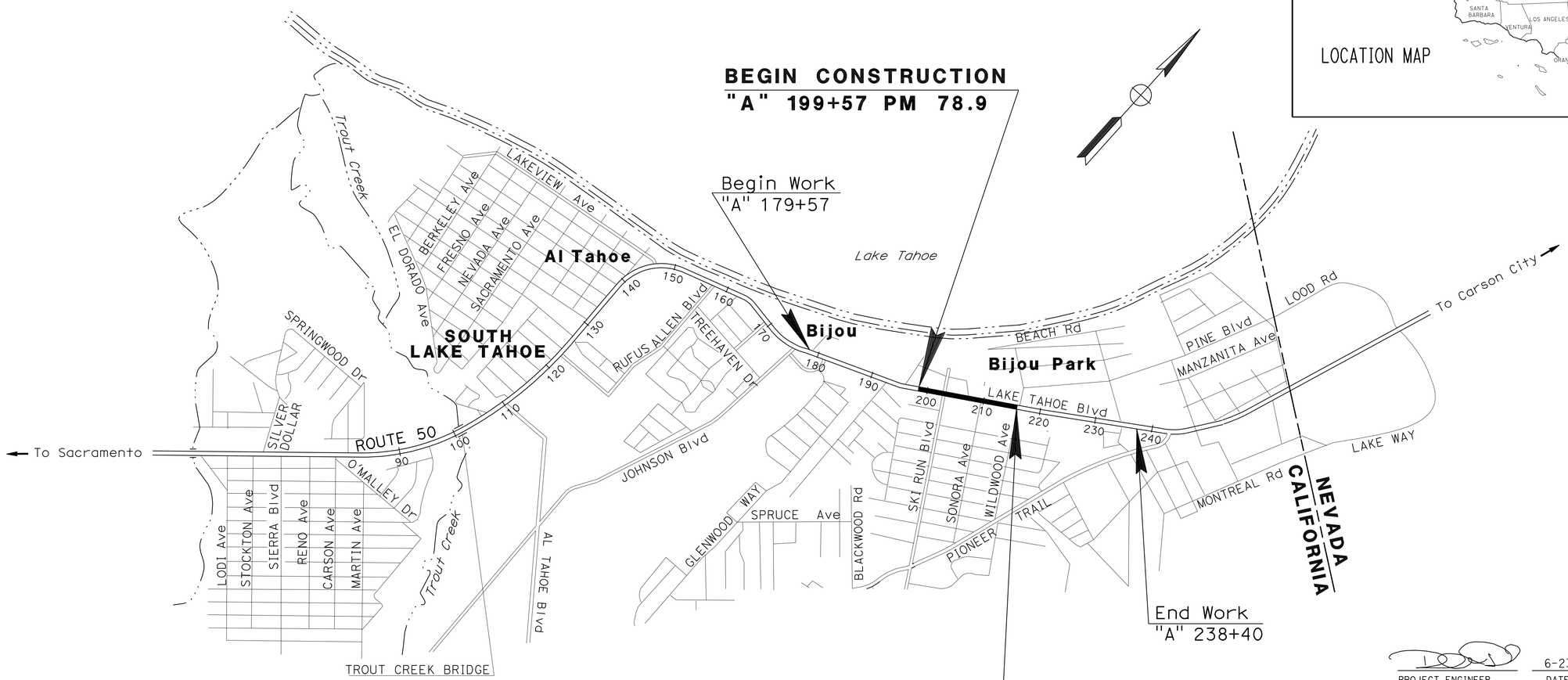

NO SCALE

PROJECT ENGINEER
REGISTERED CIVIL ENGINEER

6-23-11
DATE

REGISTERED PROFESSIONAL ENGINEER
R. REAL
No. 72044
Exp. 6-30-12
CIVIL
STATE OF CALIFORNIA

November 7, 2011
PLANS APPROVAL DATE

THE STATE OF CALIFORNIA OR ITS OFFICERS OR AGENTS SHALL NOT BE RESPONSIBLE FOR THE ACCURACY OR COMPLETENESS OF SCANNED COPIES OF THIS PLAN SHEET.

THE CONTRACTOR SHALL POSSESS THE CLASS (OR CLASSES) OF LICENSE AS SPECIFIED IN THE "NOTICE TO BIDDERS."

CONTRACT No.	03-1A7344
PROJECT ID	0300000216

PROJECT MANAGER: M. COOK
DESIGN ENGINEER: T. TABSHOURI

LAST REVISION 06-15-11
DATE PLOTTED => 11-JAN-2012
TIME PLOTTED => 06:03

Dist	COUNTY	ROUTE	POST MILES TOTAL PROJECT	SHEET No.	TOTAL SHEETS
03	ED	50	78.9/79.5	2	78

M Anand 6-23-11
REGISTERED CIVIL ENGINEER DATE

11-7-11
PLANS APPROVAL DATE

REGISTERED PROFESSIONAL ENGINEER
A. MAGANTI
No. C74128
Exp. 6-30-13
CIVIL
STATE OF CALIFORNIA

THE STATE OF CALIFORNIA OR ITS OFFICERS OR AGENTS SHALL NOT BE RESPONSIBLE FOR THE ACCURACY OR COMPLETENESS OF SCANNED COPIES OF THIS PLAN SHEET.

TYPICAL STRUCTURAL SECTION

1. 0.45′ HMA-TYPE A
   0.70′ AB (CLASS 2)
2. CURB & GUTTER (TYPE A2-8)
3. Exist
   0.90′-1.83′ AC
   0.67′ CTB
4. COLD PLANE 0.85′ Max
   0.45′ HMA-TYPE A
5. 0.35′ HMA-TYPE A
   0.50′ AB (CLASS 2)
6. COLD PLANE 0.15′ Max
   0.15′ HMA-TYPE A

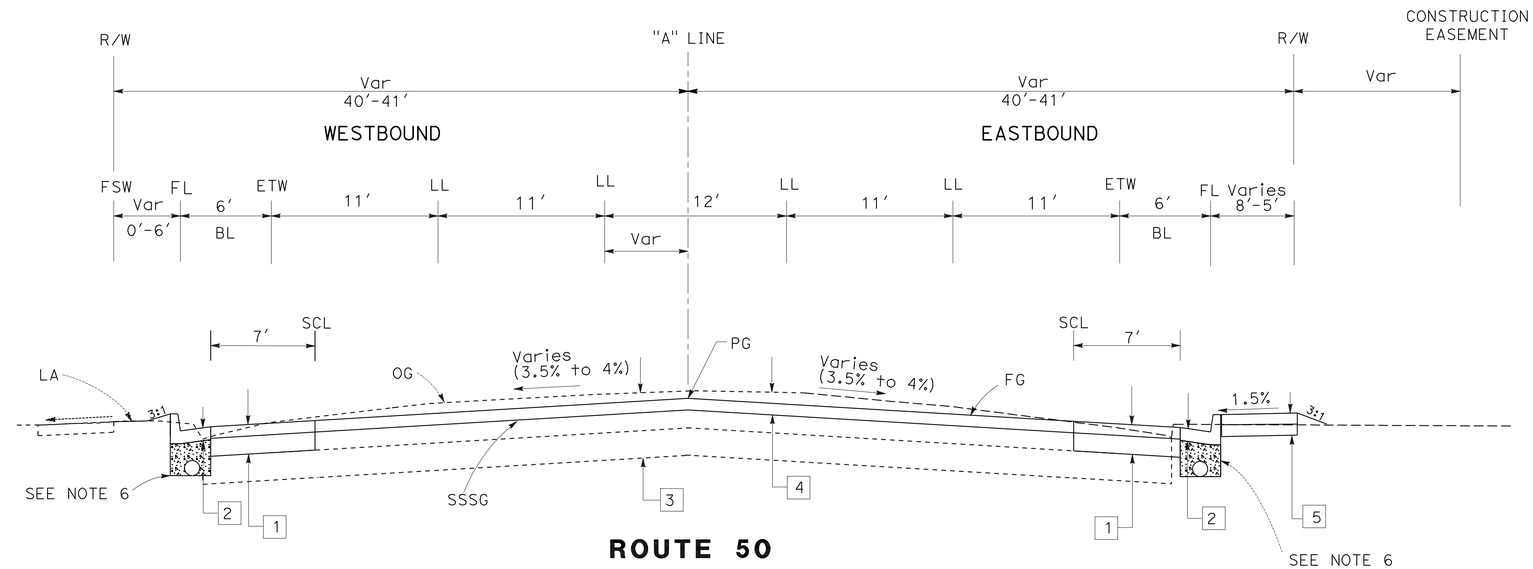

ROUTE 50

"A" Sta 203+40 TO Sta 218+40

NOTES:

1. DIMENSIONS OF THE PAVEMENT STRUCTURES (STRUCTURAL SECTIONS) ARE SUBJECT TO TOLERANCES SPECIFIED IN THE STANDARD SPECIFICATIONS.
2. SUPERELEVATION AS SHOWN OR AS DIRECTED BY THE ENGINEER.
3. FOR R/W AND EASEMENT LIMITS SEE LAYOUT SHEETS.
4. SIDEWALK LIMITS VARY (SEE LAYOUT SHEETS).
5. PAVEMENT TRASITION FROM 203+40 to 205+00 TO MATCH EXISTING CROSS SLOPE AT 203+40.
6. MINOR CONCRETE (BACKFILL) FOR DRAINAGE PIPES AS SHOWN ON DRAINAGE DETAILS.

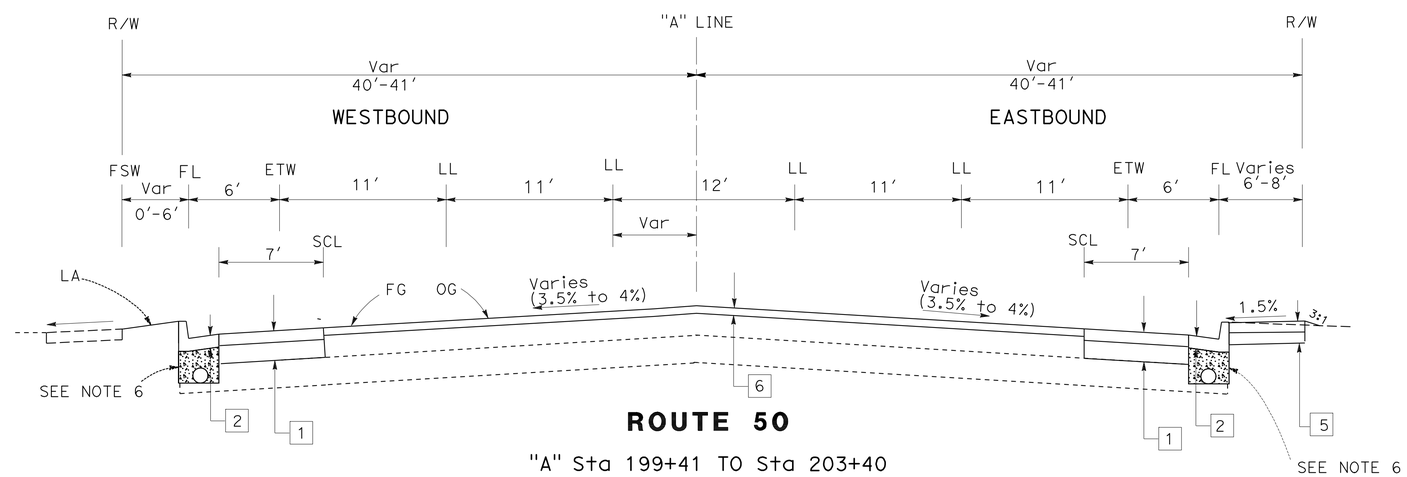

ROUTE 50

"A" Sta 199+41 TO Sta 203+40

ABBREVIATIONS

SCL	SAWCUT LINE
SW	SIDEWALK
FSW	FRONT OF SIDEWALK
BSW	BACK OF SIDEWALK
BL	BIKE LANE
LA	LANDSCAPE
SSSG	STRUCTURAL SECTION SUB GRADE
BC	BACK OF CURB

TYPICAL CROSS SECTIONS

NO SCALE

X-1

REVISED BY | DATE REVISED
ANAND MAGANTI | TAREK TABSHOURI
CALCULATED-DESIGNED BY | CHECKED BY
FUNCTIONAL SUPERVISOR: TAREK TABSHOURI

STATE OF CALIFORNIA - DEPARTMENT OF TRANSPORTATION
Caltrans
NORTH REGION
DIVISION OF ENGINEERING
BRANCH M4

LAST REVISION 06-15-11 | DATE PLOTTED => 15-NOV-2011 | TIME PLOTTED => 14:22

Dist	COUNTY	ROUTE	POST MILES TOTAL PROJECT	SHEET No.	TOTAL SHEETS
03	ED	50	78.9/79.5	3	78

REGISTERED CIVIL ENGINEER 6-23-11 DATE

11-7-11
PLANS APPROVAL DATE

REGISTERED PROFESSIONAL ENGINEER R. REAL No. 72044 Exp. 6-30-12 CIVIL STATE OF CALIFORNIA

THE STATE OF CALIFORNIA OR ITS OFFICERS OR AGENTS SHALL NOT BE RESPONSIBLE FOR THE ACCURACY OR COMPLETENESS OF SCANNED COPIES OF THIS PLAN SHEET.

NOTE:

FOR ACCURATE RIGHT OF WAY DATA, CONTACT
RIGHT OF WAY ENGINEERING AT THE DISTRICT OFFICE.

LEGEND:

SCL SAWCUT LINE

BL BIKE LANE

SW SIDE WALK

PAVEMENT TRANSITION

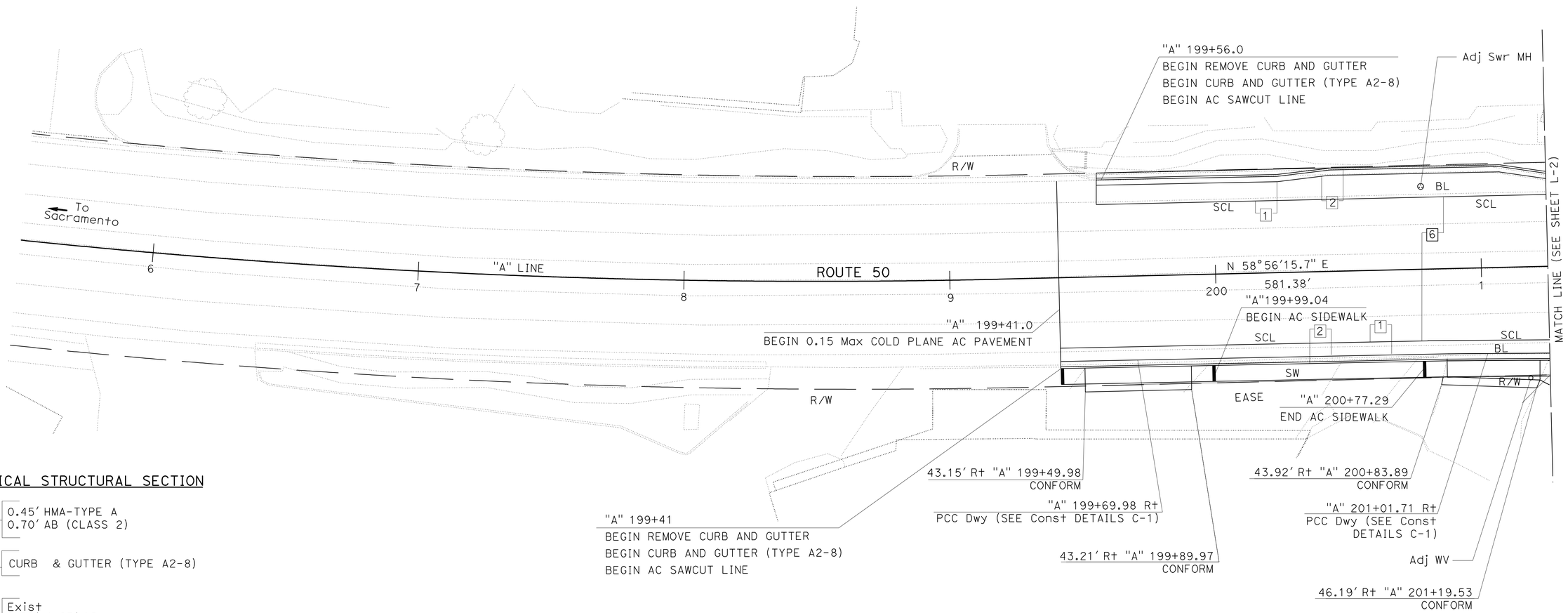

TYPICAL STRUCTURAL SECTION

1. 0.45' HMA-TYPE A
   0.70' AB (CLASS 2)
2. CURB & GUTTER (TYPE A2-8)
3. Exist
   0.90'-1.83' AC
   0.67' CTB
4. COLD PLANE 0.85' Max
   0.45' HMA-TYPE A
5. 0.35' HMA-TYPE A
   0.50' AB (CLASS 2)
6. COLD PLANE 0.15' Max
   0.15' HMA-TYPE A

LAYOUT

SCALE: 1" = 20'

L-1

REVISED BY | DATE REVISED

REBECCA REAL | ANAND MAGANTI

CALCULATED-DESIGNED BY | CHECKED BY

FUNCTIONAL SUPERVISOR: TAREK TABSHOURI

STATE OF CALIFORNIA - DEPARTMENT OF TRANSPORTATION
NORTH REGION
DIVISION OF ENGINEERING
BRANCH M4
Caltrans

LAST REVISION 06-15-11 | DATE PLOTTED => 15-NOV-2011 | TIME PLOTTED => 14:43

Dist	COUNTY	ROUTE	POST MILES TOTAL PROJECT	SHEET No.	TOTAL SHEETS
03	ED	50	78.9/79.5	4	78

REGISTERED CIVIL ENGINEER 6-23-11 DATE

11-7-11
PLANS APPROVAL DATE

REGISTERED PROFESSIONAL ENGINEER R. REAL No. 72044 Exp. 6-30-12 CIVIL STATE OF CALIFORNIA

THE STATE OF CALIFORNIA OR ITS OFFICERS OR AGENTS SHALL NOT BE RESPONSIBLE FOR THE ACCURACY OR COMPLETENESS OF SCANNED COPIES OF THIS PLAN SHEET.

NOTE:

FOR ACCURATE RIGHT OF WAY DATA, CONTACT RIGHT OF WAY ENGINEERING AT THE DISTRICT OFFICE.

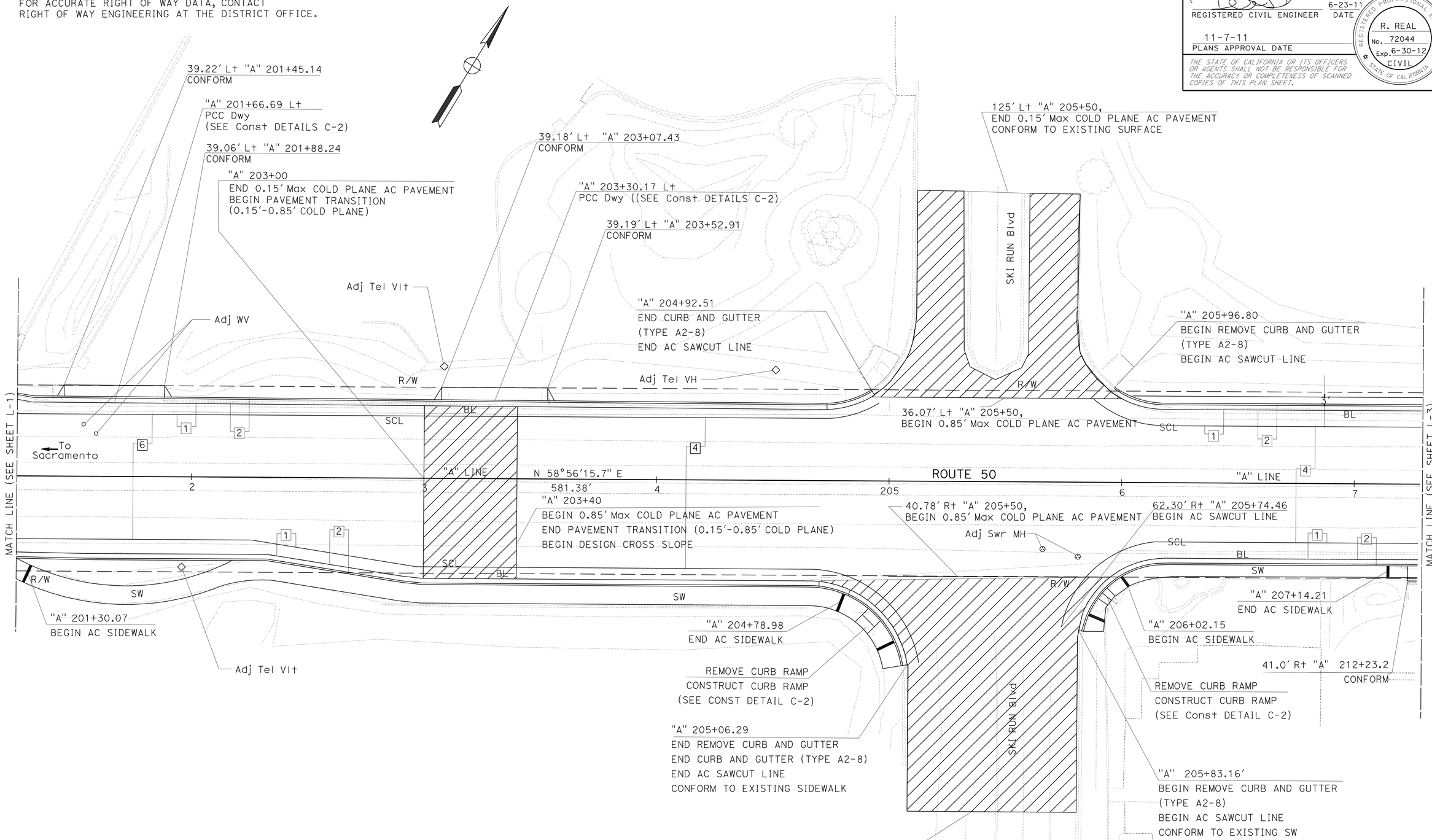

LAYOUT

SCALE: 1" = 20'

L-2

REVISED BY | DATE REVISED

REBECCA REAL | ANAND MAGANTI

CALCULATED-DESIGNED BY | CHECKED BY

FUNCTIONAL SUPERVISOR: TAREK TABSHOURI

STATE OF CALIFORNIA - DEPARTMENT OF TRANSPORTATION

Caltrans

NORTH REGION
DIVISION OF ENGINEERING
BRANCH M4

LAST REVISION 06-15-11 | DATE PLOTTED => 14-NOV-2011 | TIME PLOTTED => 10:03

Dist	COUNTY	ROUTE	POST MILES TOTAL PROJECT	SHEET No.	TOTAL SHEETS
03	ED	50	78.9/79.5	5	78

REGISTERED CIVIL ENGINEER 6-23-11 DATE

11-7-11
PLANS APPROVAL DATE

REGISTERED PROFESSIONAL ENGINEER R. REAL No. 72044 Exp. 6-30-12 CIVIL STATE OF CALIFORNIA

THE STATE OF CALIFORNIA OR ITS OFFICERS OR AGENTS SHALL NOT BE RESPONSIBLE FOR THE ACCURACY OR COMPLETENESS OF SCANNED COPIES OF THIS PLAN SHEET.

NOTE:

FOR ACCURATE RIGHT OF WAY DATA, CONTACT RIGHT OF WAY ENGINEERING AT THE DISTRICT OFFICE.

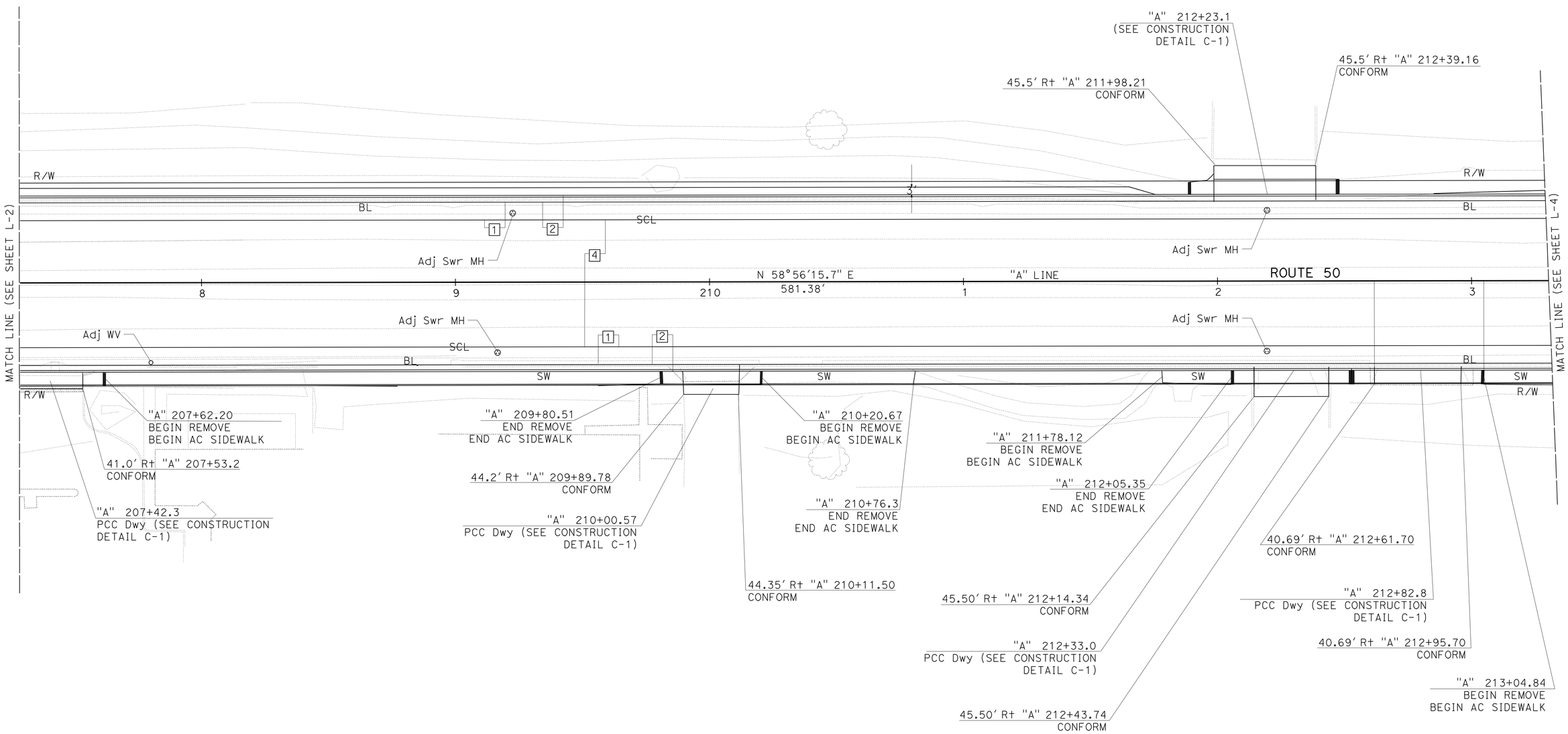

LAYOUT

SCALE: 1" = 20'

L-3

REVISED BY | DATE REVISED

REBECCA REAL | ANAND MAGANTI

CALCULATED-DESIGNED BY | CHECKED BY

FUNCTIONAL SUPERVISOR

TAREK TABSHOURI

STATE OF CALIFORNIA - DEPARTMENT OF TRANSPORTATION

Caltrans

NORTH REGION
DIVISION OF ENGINEERING
BRANCH M4

LAST REVISION 06-15-11 | DATE PLOTTED => 10-NOV-2011 | TIME PLOTTED => 16:18

Dist	COUNTY	ROUTE	POST MILES TOTAL PROJECT	SHEET No.	TOTAL SHEETS
03	ED	50	78.9/79.5	6	78

REGISTERED CIVIL ENGINEER 6-23-11 DATE

11-7-11
PLANS APPROVAL DATE

REGISTERED PROFESSIONAL ENGINEER R. REAL No. 72044 Exp. 6-30-12 CIVIL STATE OF CALIFORNIA

THE STATE OF CALIFORNIA OR ITS OFFICERS OR AGENTS SHALL NOT BE RESPONSIBLE FOR THE ACCURACY OR COMPLETENESS OF SCANNED COPIES OF THIS PLAN SHEET.

NOTE:

FOR ACCURATE RIGHT OF WAY DATA, CONTACT
RIGHT OF WAY ENGINEERING AT THE DISTRICT OFFICE.

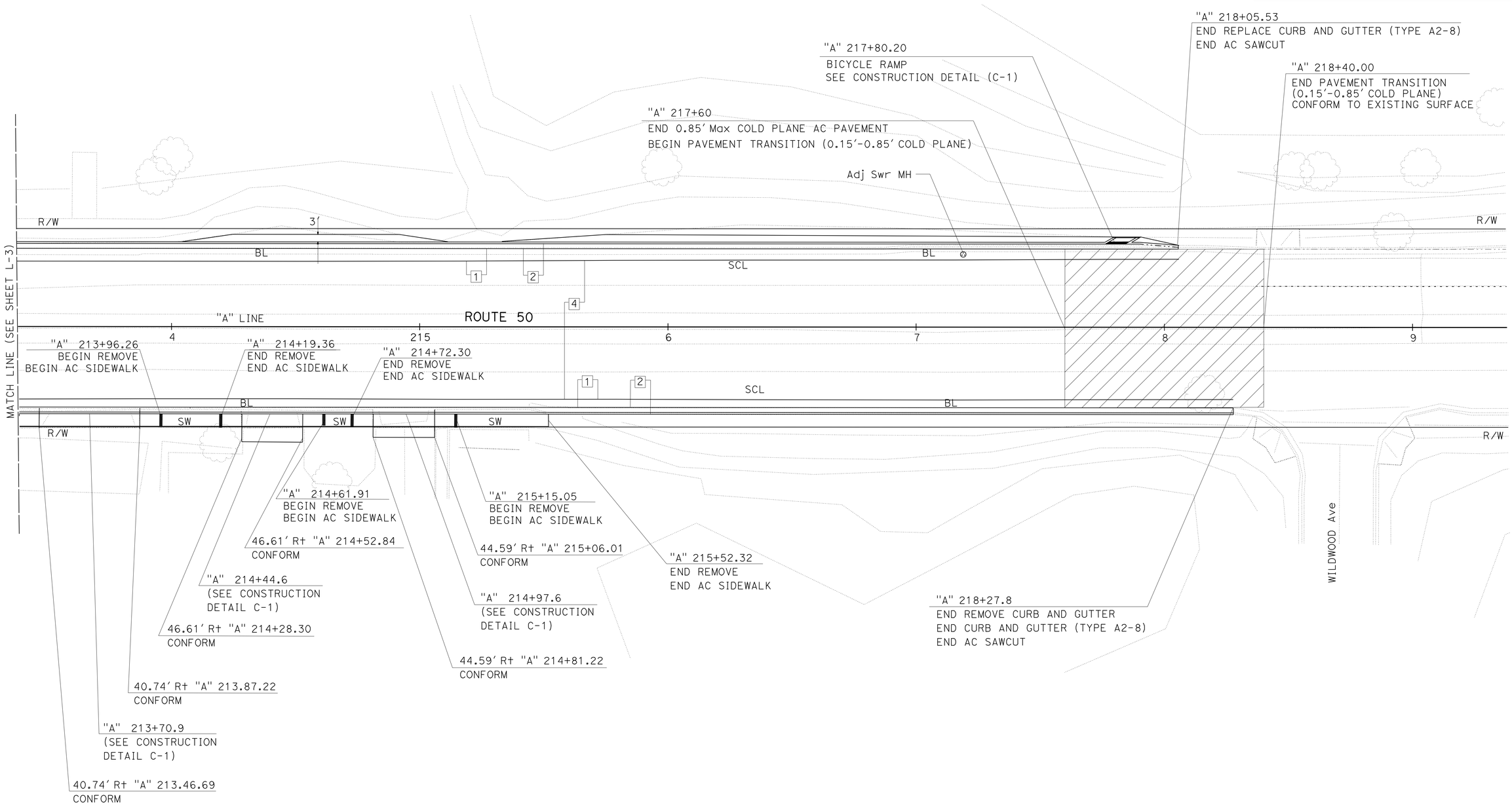

LAYOUT
SCALE: 1" = 20'

L-4

STATE OF CALIFORNIA - DEPARTMENT OF TRANSPORTATION
Caltrans
NORTH REGION
DIVISION OF ENGINEERING
BRANCH M4

FUNCTIONAL SUPERVISOR: TAREK TABSHOURI
CALCULATED-DESIGNED BY: REBECCA REAL
CHECKED BY: ANAND MAGANTI
REVISED BY
DATE REVISED

LAST REVISION 06-15-11
DATE PLOTTED => 14-NOV-2011
TIME PLOTTED => 10:04

Dist	COUNTY	ROUTE	POST MILES TOTAL PROJECT	SHEET No.	TOTAL SHEETS
03	ED	50	78.9/79.5	7	78

M Anand 6-23-11
REGISTERED CIVIL ENGINEER DATE

11-7-11
PLANS APPROVAL DATE

REGISTERED PROFESSIONAL ENGINEER
A. MAGANTI
No. C74128
Exp. 6-30-13
CIVIL
STATE OF CALIFORNIA

THE STATE OF CALIFORNIA OR ITS OFFICERS OR AGENTS SHALL NOT BE RESPONSIBLE FOR THE ACCURACY OR COMPLETENESS OF SCANNED COPIES OF THIS PLAN SHEET.

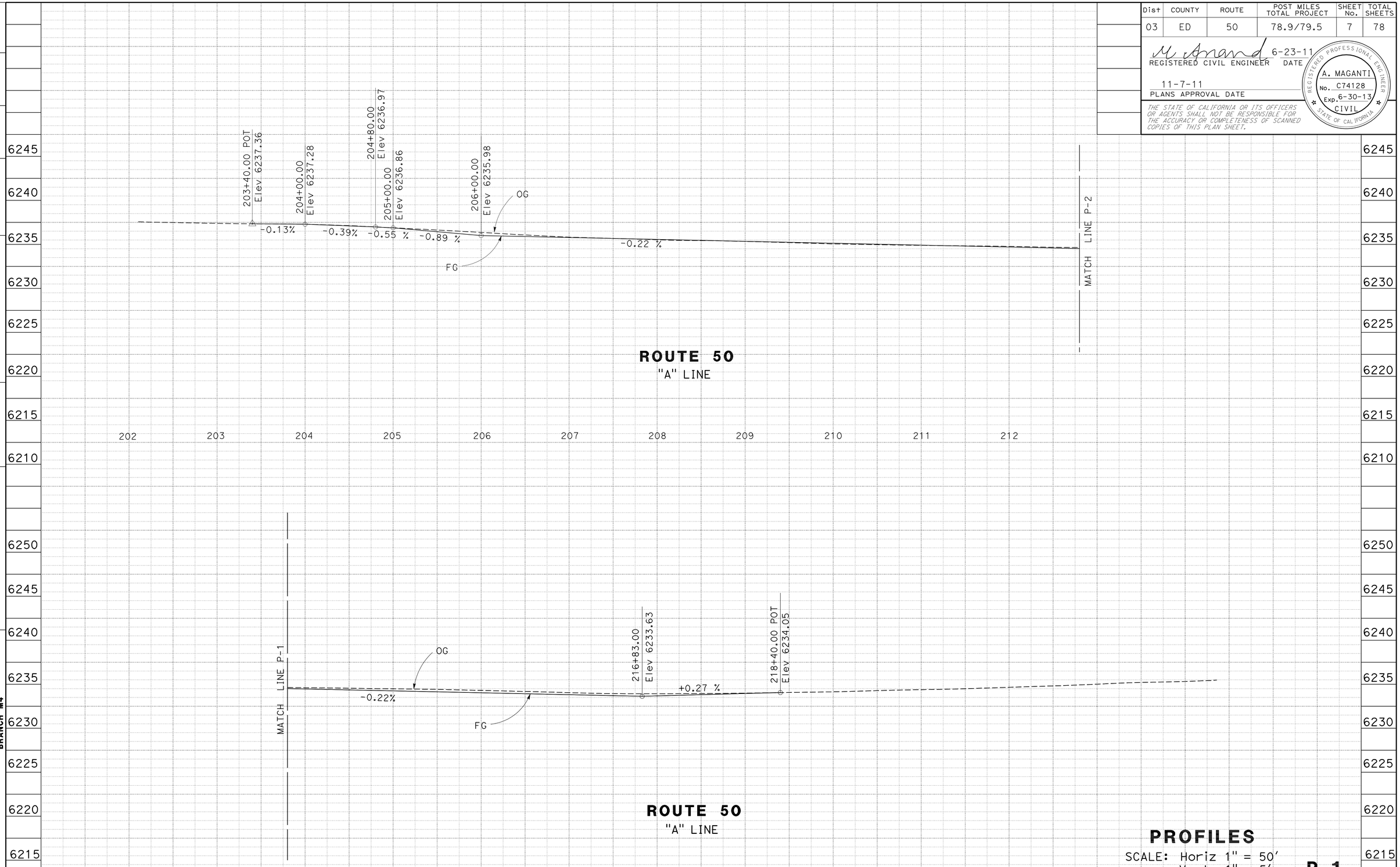

PROFILES

SCALE: Horiz 1" = 50'
Vert 1" = 5'

P-1

STATE OF CALIFORNIA - DEPARTMENT OF TRANSPORTATION
Caltrans
NORTH REGION
DIVISION OF ENGINEERING
BRANCH M4

FUNCTIONAL SUPERVISOR: TAREK TABSHOURI

CALCULATED-DESIGNED BY: ANAND MAGANTI
CHECKED BY: TAREK TABSHOURI

REVISED BY
DATE REVISED

LAST REVISION 06-15-11
DATE PLOTTED => 10-NOV-2011
TIME PLOTTED => 16:18

Dist	COUNTY	ROUTE	POST MILES TOTAL PROJECT	SHEET No.	TOTAL SHEETS
03	ED	50	78.9/79.5	8	78

REGISTERED CIVIL ENGINEER 6-23-11 DATE

11-7-11
PLANS APPROVAL DATE

REGISTERED PROFESSIONAL ENGINEER R. REAL No. 72044 Exp. 6-30-12 CIVIL STATE OF CALIFORNIA

THE STATE OF CALIFORNIA OR ITS OFFICERS OR AGENTS SHALL NOT BE RESPONSIBLE FOR THE ACCURACY OR COMPLETENESS OF SCANNED COPIES OF THIS PLAN SHEET.

NOTE: FOR DRIVEWAY DETAILS NOT SHOWN, SEE STANDARD PLANS RSP A87A

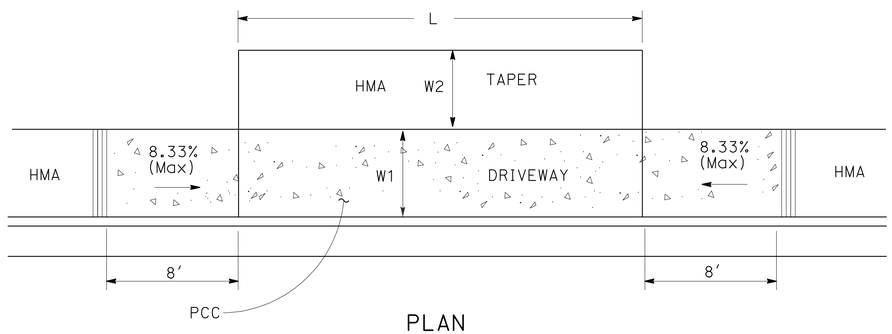

PLAN

CASE B-MOD

DRIVEWAYS

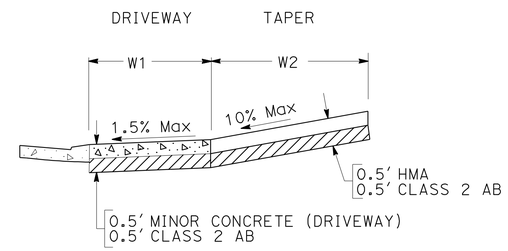

PROFILE

CASE B-MOD

STATION	Loc	TYPE	L (FT)	W1 (FT)	W2 (FT)
207+42.3	R+	CASE B - Mod	29.88	5	1.0
210+00.0	R+	CASE B - Mod	22.0	5	4.1
212+23.1	L+	CASE B - Mod	41.20	5	5.4
212+33.0	R+	CASE B - Mod	29.39	5	4.0
212+82.8	R+	CASE B - Mod	34.03	5	0.0
213+70.9	R+	CASE B - Mod	40.53	5	0.0
214+44.6	R+	CASE B - Mod	24.54	5	5.6
214+97.6	R+	CASE B - Mod	24.80	5	4.0

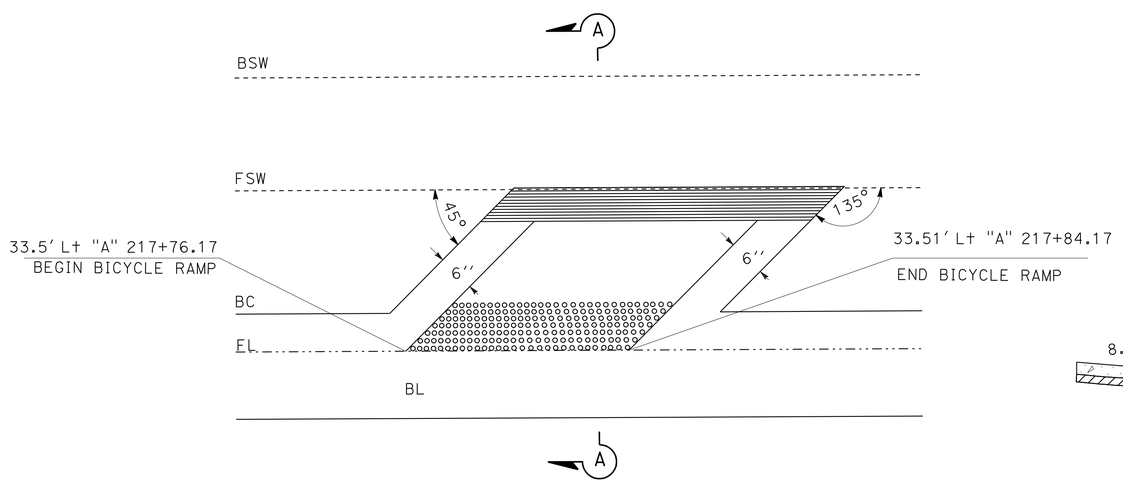

"A" 217+80.20 Lt

BIKE RAMP

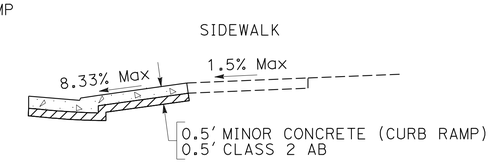

SECTION A-A

CONSTRUCTION DETAILS

NO SCALE

C-1

STATE OF CALIFORNIA - DEPARTMENT OF TRANSPORTATION
Caltrans
NORTH REGION
DIVISION OF ENGINEERING
BRANCH M4

FUNCTIONAL SUPERVISOR: TAREK TABSHOURI

CALCULATED-DESIGNED BY: REBECCA REAL
CHECKED BY: ANAND MAGANTI

REVISED BY | DATE REVISED

LAST REVISION 06-15-11 | DATE PLOTTED => 10-NOV-2011 | TIME PLOTTED => 16:18

Dist	COUNTY	ROUTE	POST MILES TOTAL PROJECT	SHEET No.	TOTAL SHEETS
03	ED	50	78.9/79.5	9	78

REGISTERED CIVIL ENGINEER 6-23-11 DATE

11-7-11
PLANS APPROVAL DATE

REGISTERED PROFESSIONAL ENGINEER R. REAL No. 72044 Exp. 6-30-12 CIVIL STATE OF CALIFORNIA

THE STATE OF CALIFORNIA OR ITS OFFICERS OR AGENTS SHALL NOT BE RESPONSIBLE FOR THE ACCURACY OR COMPLETENESS OF SCANNED COPIES OF THIS PLAN SHEET.

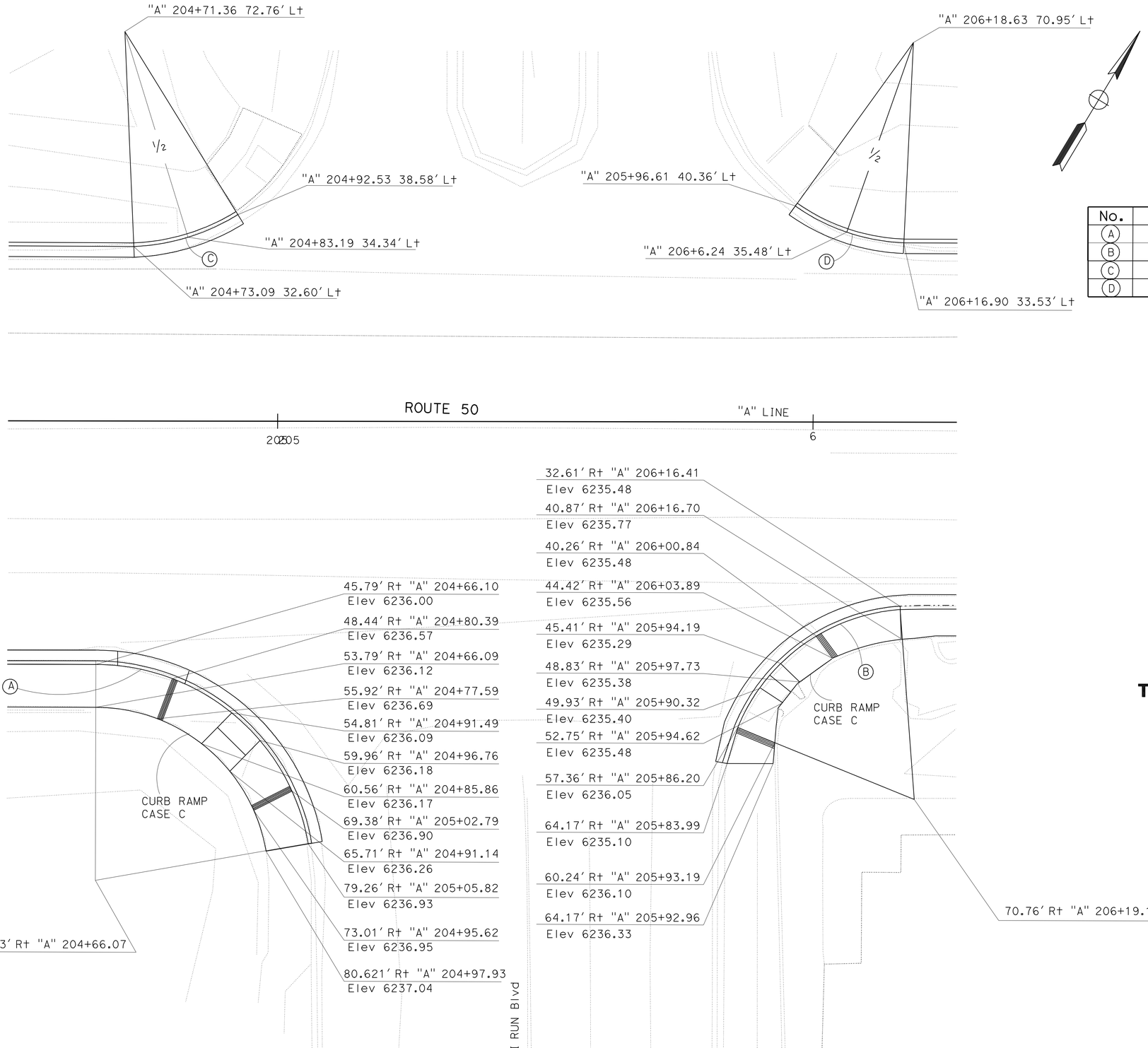

CURVE DATA

No.	R	Δ	T	L	REMARKS
A	40.33'	80°9'17"	33.94'	56.42'	TBC
B	35.59'	63°30'13"	22.02'	39.45'	TBC
C	201.02'	29°18'51"	52.58'	102.85'	FL
D	188.13'	33°1'19"	55.77'	108.43'	FL

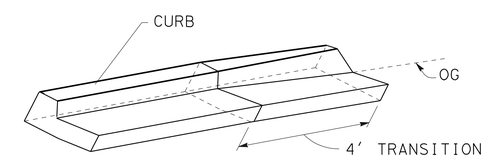

TRANSITION FROM CURB TO OG

CONSTRUCTION DETAILS

NO SCALE

C-2

STATE OF CALIFORNIA - DEPARTMENT OF TRANSPORTATION
Caltrans
NORTH REGION
DIVISION OF ENGINEERING
BRANCH M4

FUNCTIONAL SUPERVISOR: TAREK TABSHOURI

CALCULATED-DESIGNED BY: REBECCA REAL
CHECKED BY: ANAND MAGANTI

REVISED BY | DATE REVISED

LAST REVISION 06-15-11 | DATE PLOTTED => 14-NOV-2011 | TIME PLOTTED => 09:41

Dist	COUNTY	ROUTE	POST MILES TOTAL PROJECT	SHEET No.	TOTAL SHEETS
03	ED	50	78.9/79.5	10	78

Tarek Tabshouri 6-23-11
REGISTERED CIVIL ENGINEER DATE

11-7-11
PLANS APPROVAL DATE

REGISTERED PROFESSIONAL ENGINEER TAREK TABSHOURI No. C 65423 Exp. 9-30-11 CIVIL STATE OF CALIFORNIA

THE STATE OF CALIFORNIA OR ITS OFFICERS OR AGENTS SHALL NOT BE RESPONSIBLE FOR THE ACCURACY OR COMPLETENESS OF SCANNED COPIES OF THIS PLAN SHEET.

NOTES:

1. 4' DIAMETER MH SHOWN.
2. ALL SECTIONS TO BE ASTM C-47B.

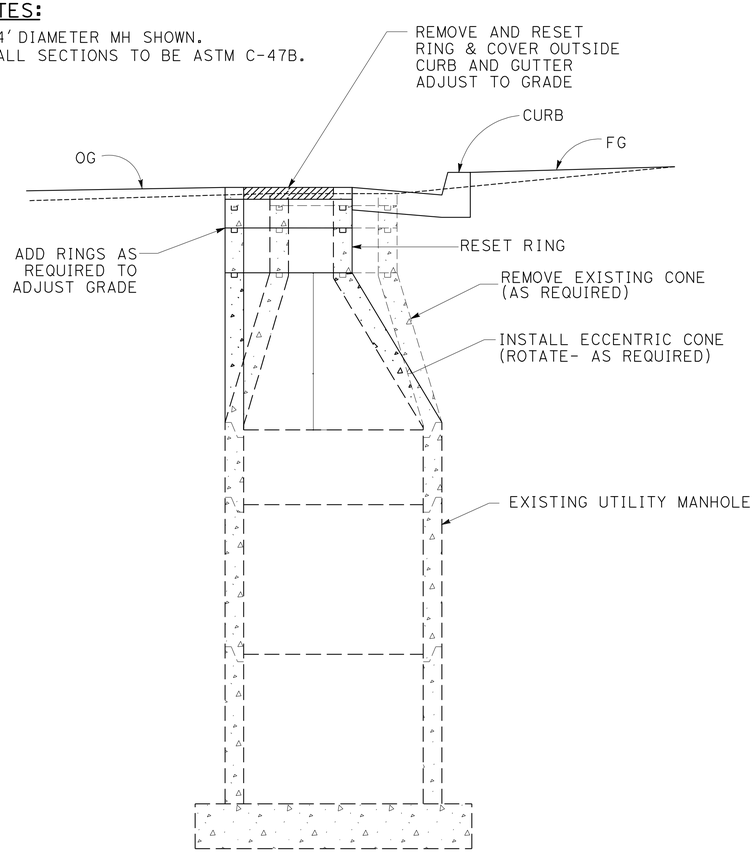

SECTION

ADJUST SEWER MANHOLE TO GRADE

NOTES:

1. ALL SEWER MANHOLE COMPONENTS SHALL USE A JOINT SEALING COMPOUND.
2. TOTAL DISTANCE FROM TOP OF SEWER CONE TO TOP OF SEWER MANHOLE COVER SHALL NOT BE LESS THAN 6" OR GREATER THAN 12".

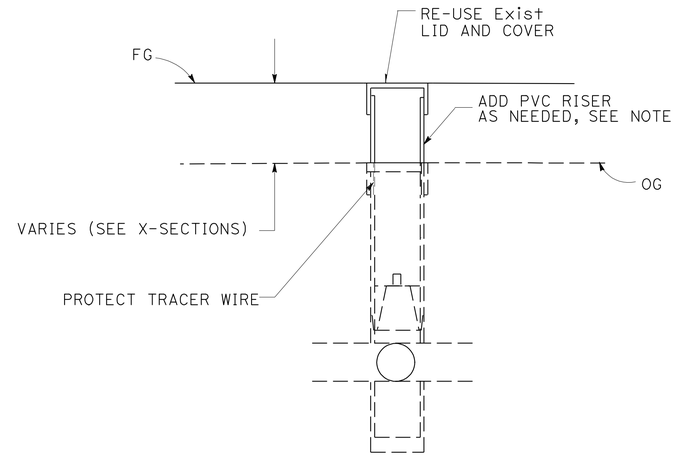

ADJUST UTILITY VALVE COVER (SEWER/ WATER)

NOTE:

VALVE BOX RISER PIPE SHALL BE EIGHT INCHES (8") PVC, SDR-35 AND INSTALLED PERPENDICULARLY CENTERED AROUND AND COVERING THE UPPER VALVE BONNET AND OPERATOR.

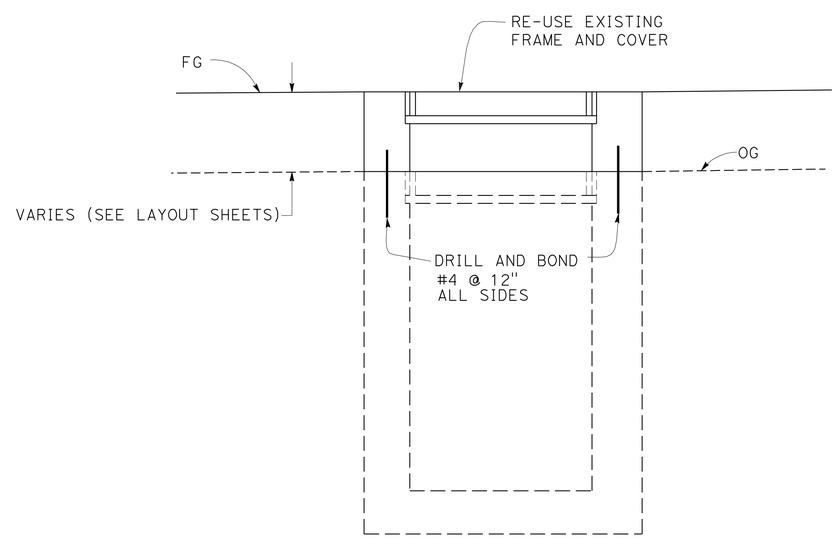

ADJUST TELEPHONE VAULT TO GRADE

ADJUST UTILITIES CONSTRUCTION DETAILS

NO SCALE

C-3

STATE OF CALIFORNIA - DEPARTMENT OF TRANSPORTATION
Caltrans
NORTH REGION
DIVISION OF ENGINEERING
BRANCH M4

FUNCTIONAL SUPERVISOR: TAREK TABSHOURI
CALCULATED-DESIGNED BY: KHALEEL OBAIDI
CHECKED BY: ANAND MAGANTI
REVISED BY
DATE REVISED

LAST REVISION 06-15-11
DATE PLOTTED => 10-NOV-2011
TIME PLOTTED => 16:18

Dist	COUNTY	ROUTE	POST MILES TOTAL PROJECT	SHEET No.	TOTAL SHEETS
03	ED	50	78.9/79.5	11	78

REGISTERED CIVIL ENGINEER 6-23-11 DATE

11-7-11
PLANS APPROVAL DATE

REGISTERED PROFESSIONAL ENGINEER
R. REAL
No. 72044
Exp. 6-30-12
CIVIL
STATE OF CALIFORNIA

THE STATE OF CALIFORNIA OR ITS OFFICERS OR AGENTS SHALL NOT BE RESPONSIBLE FOR THE ACCURACY OR COMPLETENESS OF SCANNED COPIES OF THIS PLAN SHEET.

NOTE:

FOR ACCURATE RIGHT OF WAY DATA, CONTACT RIGHT OF WAY ENGINEERING AT THE DISTRICT OFFICE.

LEGEND:

DRAINAGE SYSTEM No.

DRAINAGE UNIT

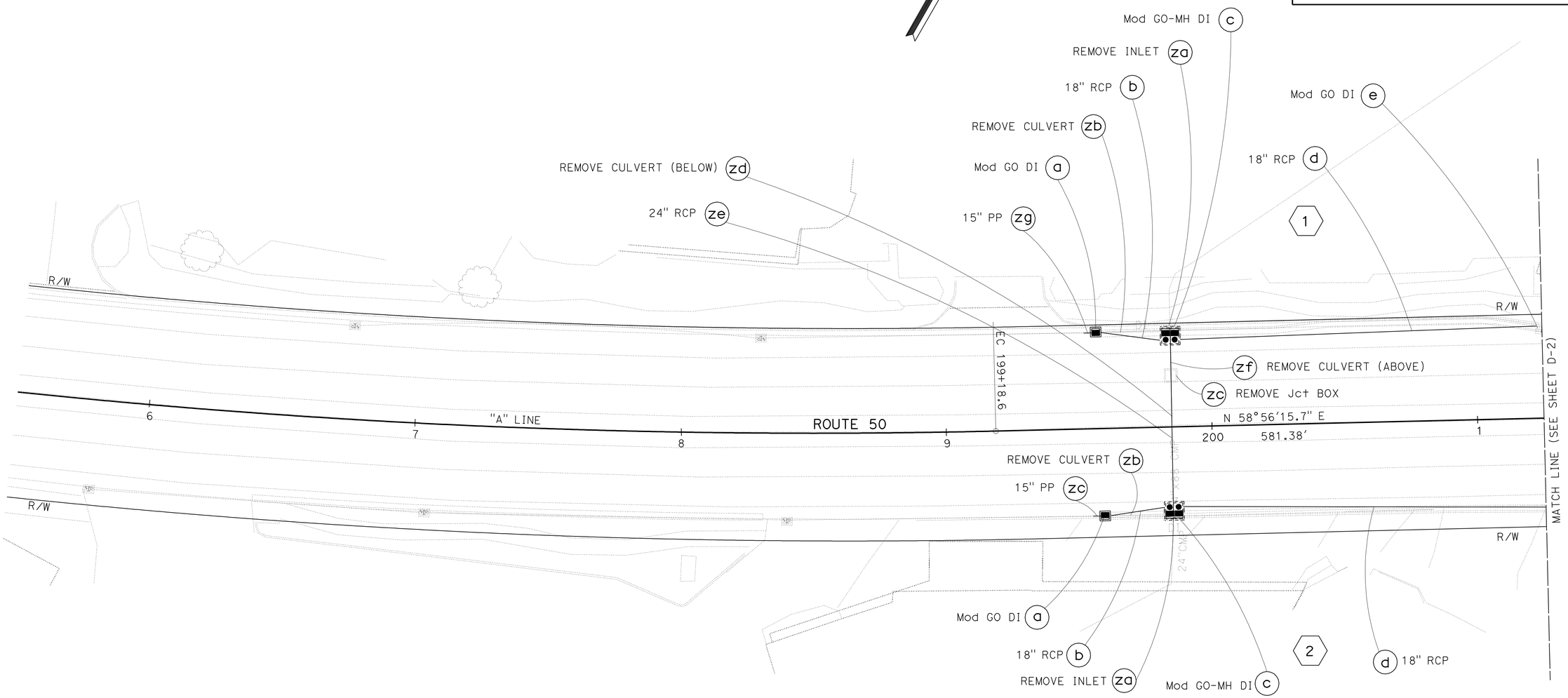

DRAINAGE PLAN

SCALE: 1" = 20'

D-1

APPROVED FOR DRAINAGE WORK ONLY

REVISED BY	DATE REVISED

CALCULATED-DESIGNED BY: REBECCA REAL
CHECKED BY: ANAND MAGANTI

FUNCTIONAL SUPERVISOR: TAREK TABSHOURI

STATE OF CALIFORNIA - DEPARTMENT OF TRANSPORTATION
Caltrans
NORTH REGION
DIVISION OF ENGINEERING
BRANCH M4

LAST REVISION 10-26-11
DATE PLOTTED => 10-NOV-2011
TIME PLOTTED => 16:18

Dist	COUNTY	ROUTE	POST MILES TOTAL PROJECT	SHEET No.	TOTAL SHEETS
03	ED	50	78.9/79.5	12	78

REGISTERED CIVIL ENGINEER 6-23-11 DATE

11-7-11
PLANS APPROVAL DATE

REGISTERED PROFESSIONAL ENGINEER R. REAL No. 72044 Exp. 6-30-12 CIVIL STATE OF CALIFORNIA

THE STATE OF CALIFORNIA OR ITS OFFICERS OR AGENTS SHALL NOT BE RESPONSIBLE FOR THE ACCURACY OR COMPLETENESS OF SCANNED COPIES OF THIS PLAN SHEET.

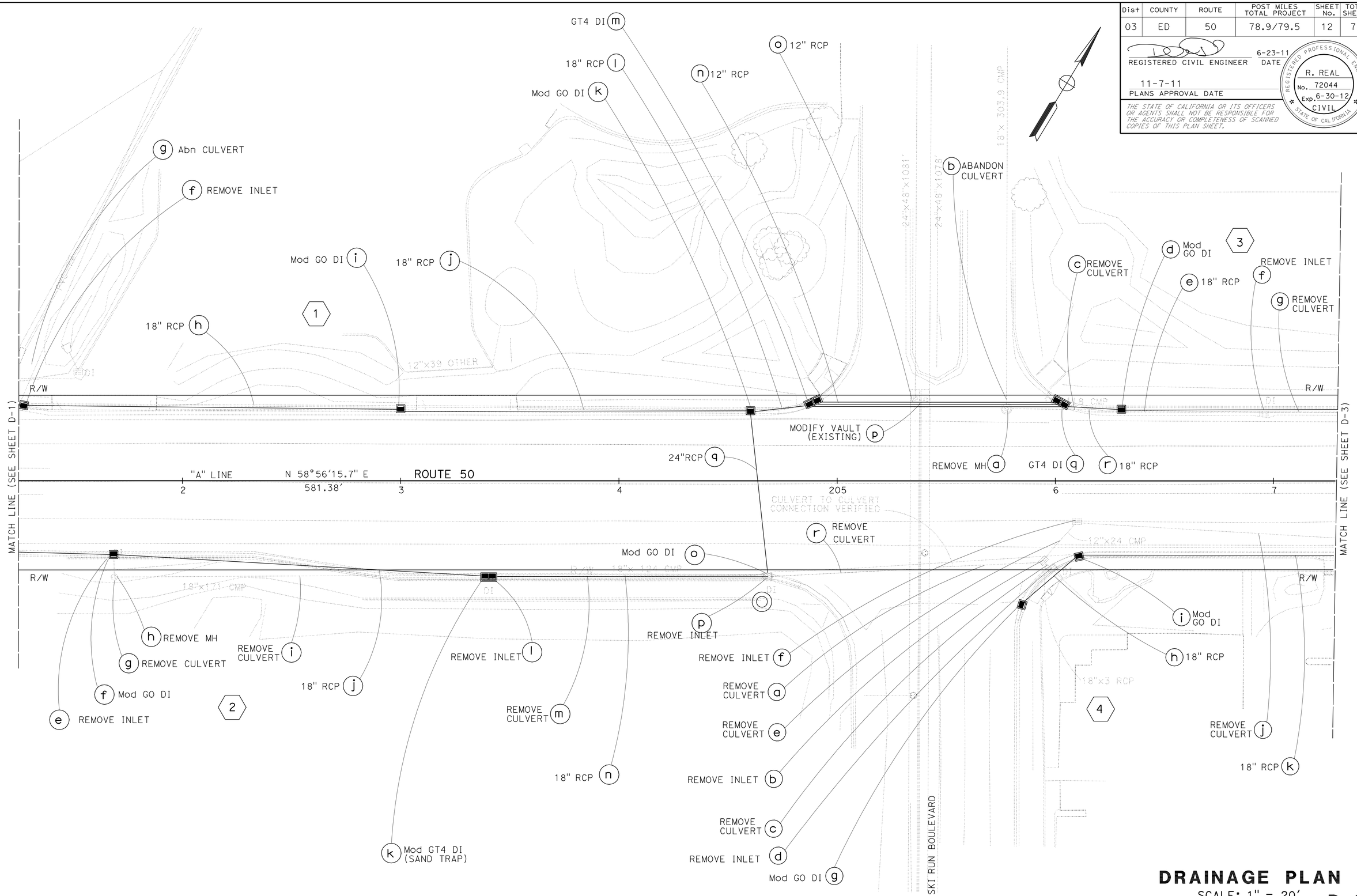

APPROVED FOR DRAINAGE WORK ONLY

DRAINAGE PLAN

SCALE: 1" = 20'

D-2

STATE OF CALIFORNIA - DEPARTMENT OF TRANSPORTATION
NORTH REGION
DIVISION OF ENGINEERING
BRANCH M4

FUNCTIONAL SUPERVISOR: TAREK TABSHOURI

CALCULATED-DESIGNED BY: REBECCA REAL
CHECKED BY: ANAND MAGANTI

REVISED BY / DATE REVISED

LAST REVISION 06-15-11
DATE PLOTTED => 10-NOV-2011
TIME PLOTTED => 16:18

Dist	COUNTY	ROUTE	POST MILES TOTAL PROJECT	SHEET No.	TOTAL SHEETS
03	ED	50	78.9/79.5	13	78

REGISTERED CIVIL ENGINEER 6-23-11 DATE

11-7-11
PLANS APPROVAL DATE

REGISTERED PROFESSIONAL ENGINEER R. REAL No. 72044 Exp. 6-30-12 CIVIL STATE OF CALIFORNIA

THE STATE OF CALIFORNIA OR ITS OFFICERS OR AGENTS SHALL NOT BE RESPONSIBLE FOR THE ACCURACY OR COMPLETENESS OF SCANNED COPIES OF THIS PLAN SHEET.

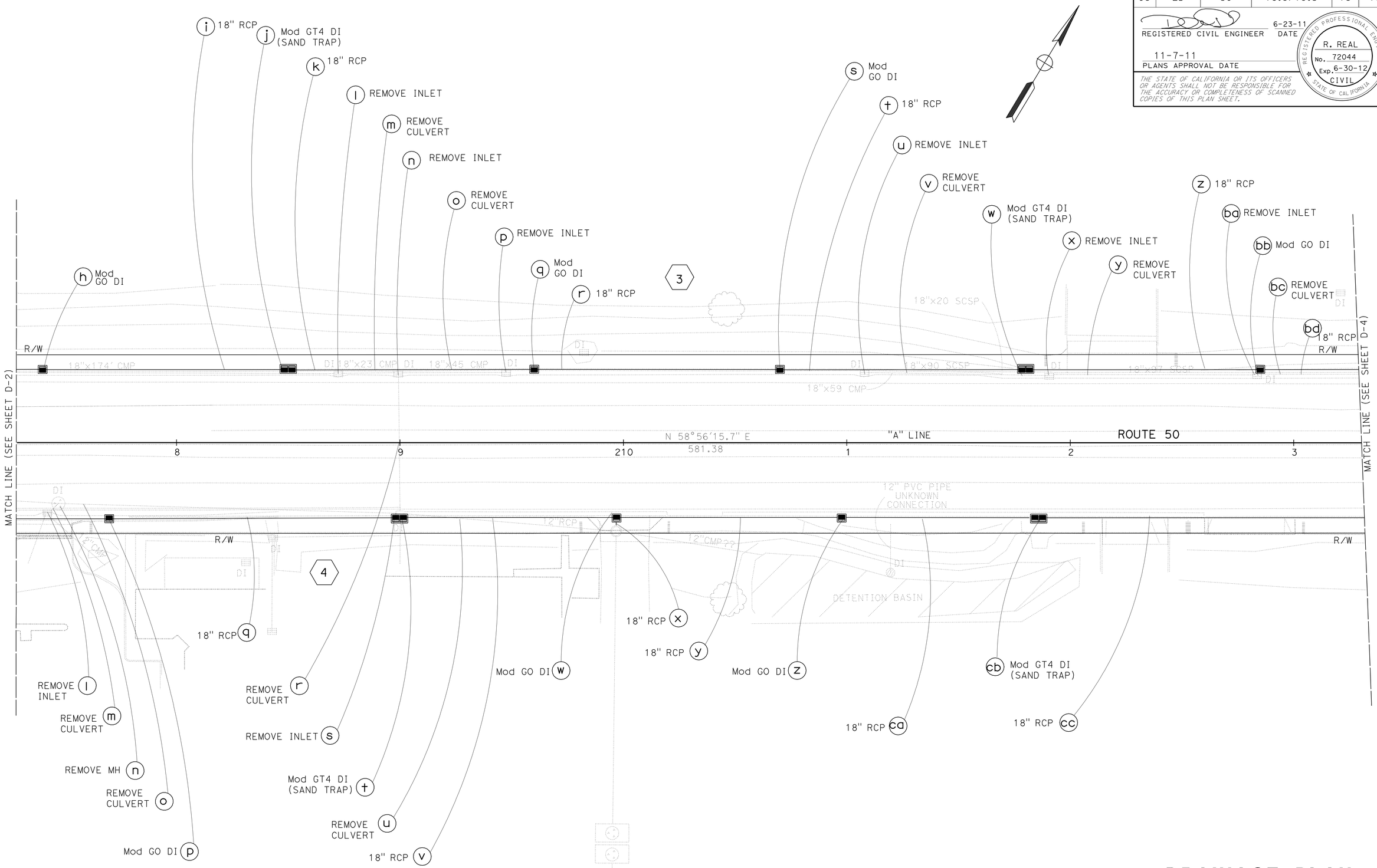

APPROVED FOR DRAINAGE WORK ONLY

DRAINAGE PLAN

SCALE: 1" = 20'

D-3

REVISED BY	DATE REVISED

CALCULATED-DESIGNED BY: REBECCA REAL
CHECKED BY: ANAND MAGANTI
FUNCTIONAL SUPERVISOR: TAREK TABSHOURI

STATE OF CALIFORNIA - DEPARTMENT OF TRANSPORTATION
Caltrans
NORTH REGION
DIVISION OF ENGINEERING
BRANCH M4

LAST REVISION 06-15-11 | DATE PLOTTED => 10-NOV-2011 | TIME PLOTTED => 16:18

Dist	COUNTY	ROUTE	POST MILES TOTAL PROJECT	SHEET No.	TOTAL SHEETS
03	ED	50	78.9/79.5	14	78

REGISTERED CIVIL ENGINEER 6-23-11 DATE

11-7-11
PLANS APPROVAL DATE

REGISTERED PROFESSIONAL ENGINEER
R. REAL
No. 72044
Exp. 6-30-12
CIVIL
STATE OF CALIFORNIA

THE STATE OF CALIFORNIA OR ITS OFFICERS OR AGENTS SHALL NOT BE RESPONSIBLE FOR THE ACCURACY OR COMPLETENESS OF SCANNED COPIES OF THIS PLAN SHEET.

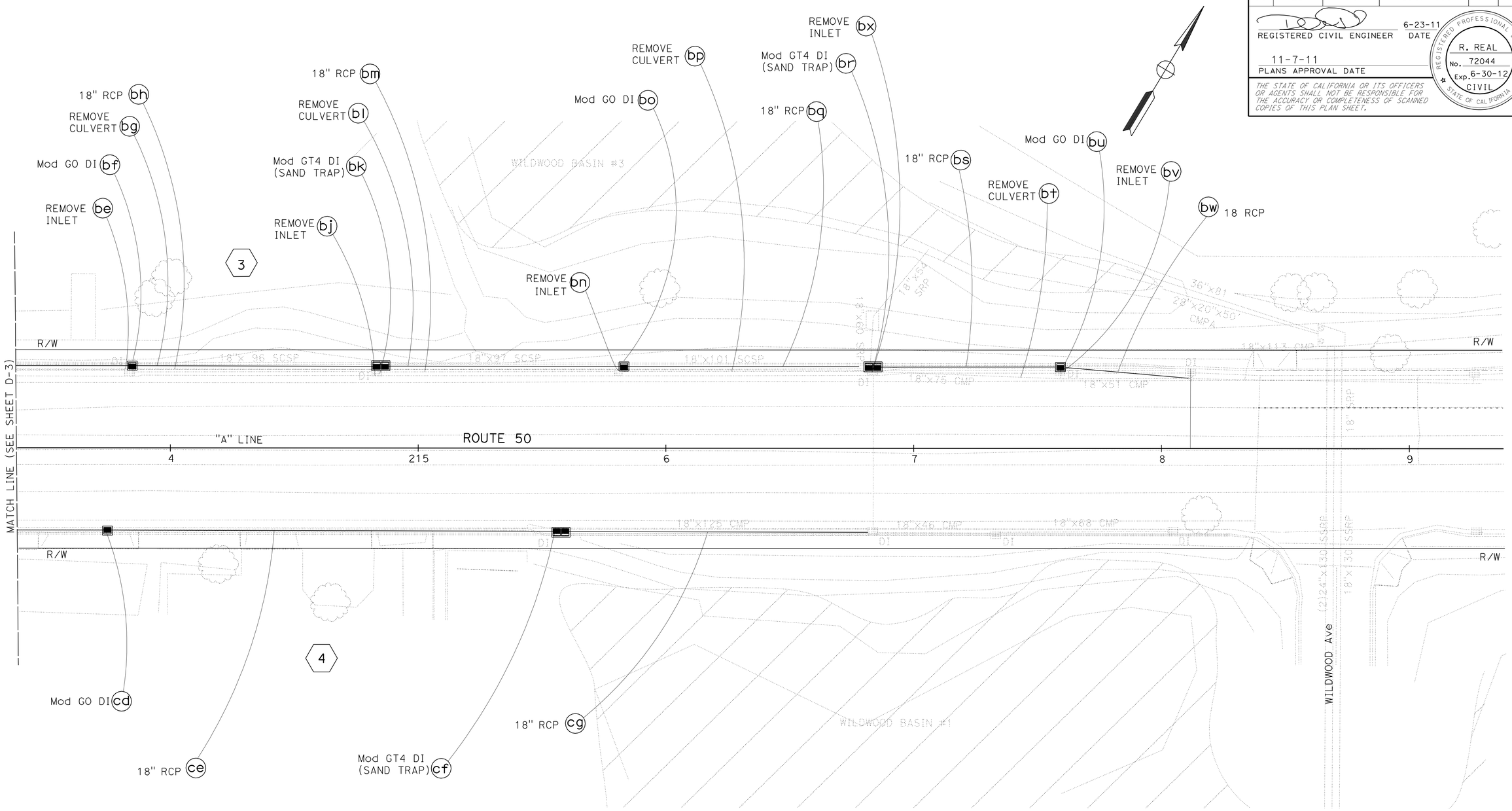

STATE OF CALIFORNIA - DEPARTMENT OF TRANSPORTATION
Caltrans
NORTH REGION
DIVISION OF ENGINEERING
BRANCH M4

FUNCTIONAL SUPERVISOR: TAREK TABSHOURI
CALCULATED-DESIGNED BY: REBECCA REAL
CHECKED BY: ANAND MAGANTI
REVISED BY
DATE REVISED

DRAINAGE PLAN

SCALE: 1" = 20'

D-4

APPROVED FOR DRAINAGE WORK ONLY

LAST REVISION 06-15-11
DATE PLOTTED => 10-NOV-2011
TIME PLOTTED => 16:18

Dist	COUNTY	ROUTE	POST MILES TOTAL PROJECT	SHEET No.	TOTAL SHEETS
03	ED	50	78.9/79.5	15	78

REGISTERED CIVIL ENGINEER 6-23-11 DATE

11-7-11
PLANS APPROVAL DATE

REGISTERED PROFESSIONAL ENGINEER R. REAL No. 72044 Exp. 6-30-12 CIVIL STATE OF CALIFORNIA

THE STATE OF CALIFORNIA OR ITS OFFICERS OR AGENTS SHALL NOT BE RESPONSIBLE FOR THE ACCURACY OR COMPLETENESS OF SCANNED COPIES OF THIS PLAN SHEET.

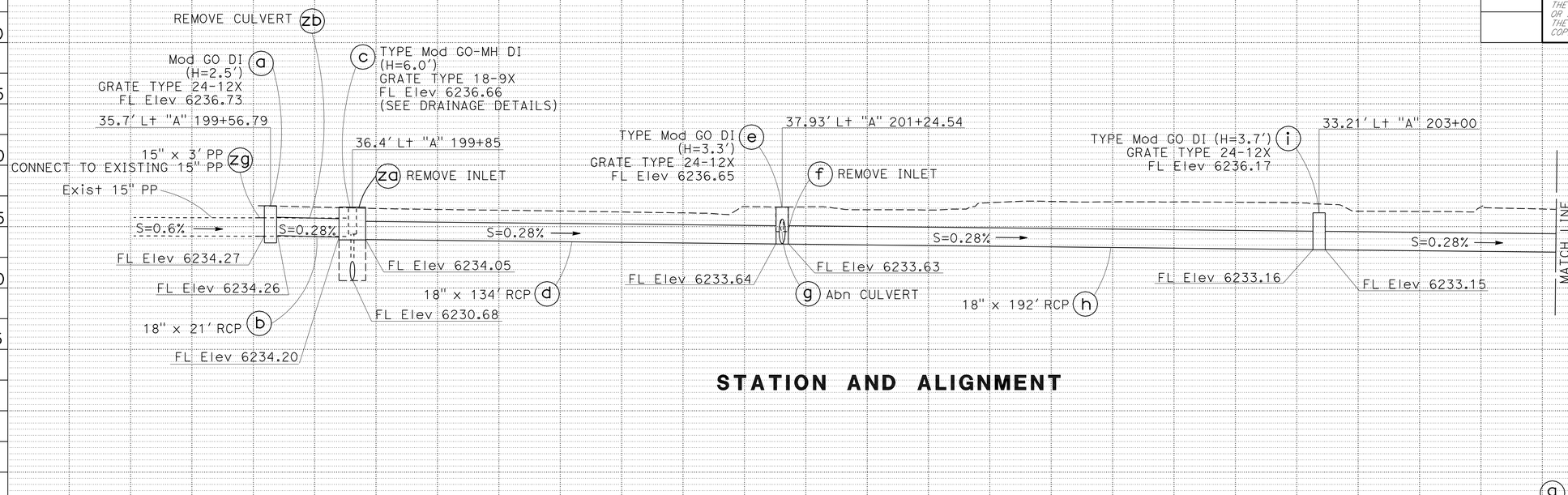

STATION AND ALIGNMENT

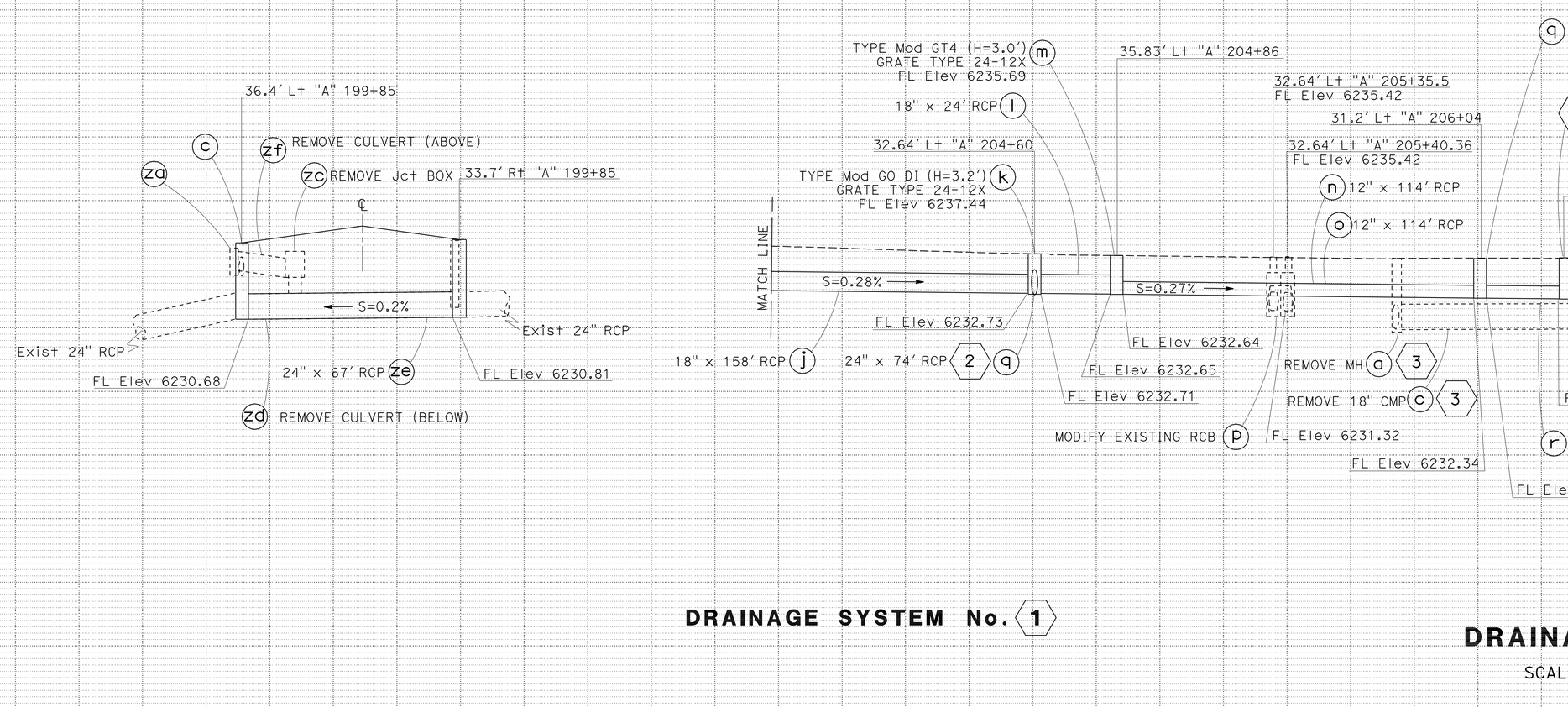

DRAINAGE SYSTEM No. (1)

DRAINAGE PROFILES

SCALE: Horiz 1" = 20'
Vert 1" = 5'

DP-1

STATE OF CALIFORNIA - DEPARTMENT OF TRANSPORTATION
Caltrans

FUNCTIONAL SUPERVISOR: TAREK TABSHOURI
CALCULATED-DESIGNED BY: ANAND MAGANTI
CHECKED BY
REVISED BY
DATE REVISED

LAST REVISION 06-15-11
DATE PLOTTED => 10-NOV-2011
TIME PLOTTED => 16:19

Dist	COUNTY	ROUTE	POST MILES TOTAL PROJECT	SHEET No.	TOTAL SHEETS
03	ED	50	78.9/79.5	16	78

REGISTERED CIVIL ENGINEER 6-23-11 DATE

11-7-11
PLANS APPROVAL DATE

REGISTERED PROFESSIONAL ENGINEER R. REAL No. 72044 Exp. 6-30-12 CIVIL STATE OF CALIFORNIA

THE STATE OF CALIFORNIA OR ITS OFFICERS OR AGENTS SHALL NOT BE RESPONSIBLE FOR THE ACCURACY OR COMPLETENESS OF SCANNED COPIES OF THIS PLAN SHEET.

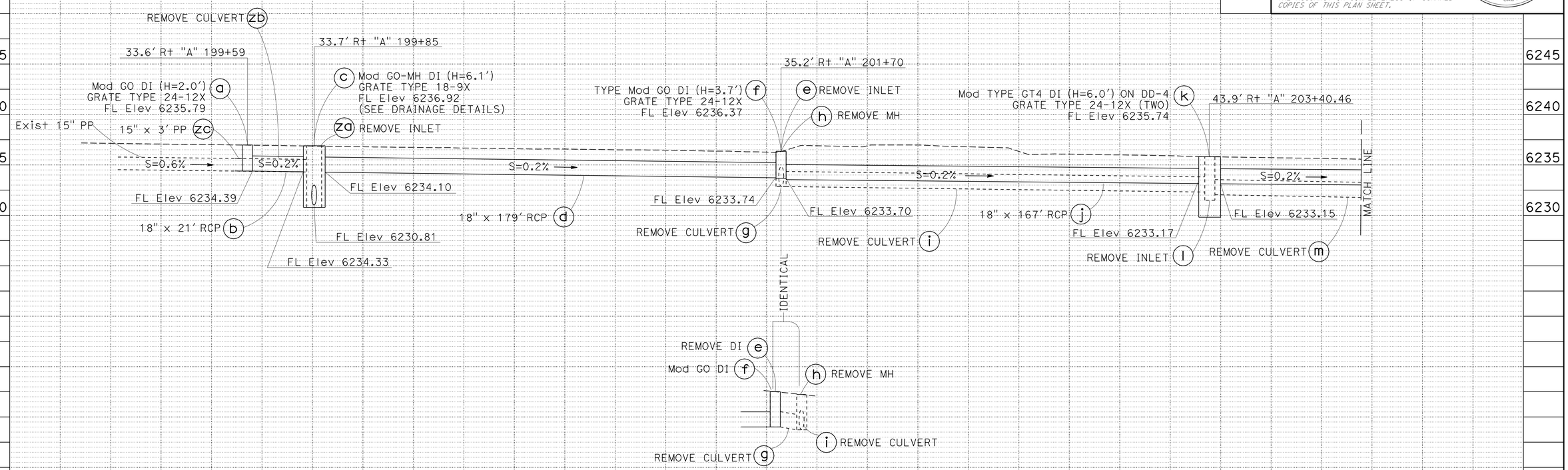

DRAINAGE SYSTEM No. (2)

DRAINAGE PROFILES

SCALE: Horiz 1" = 20'
Vert 1" = 5'

DP-2

STATE OF CALIFORNIA - DEPARTMENT OF TRANSPORTATION
Caltrans

FUNCTIONAL SUPERVISOR: TAREK TABSHOURI
CALCULATED-DESIGNED BY: ANAND MAGANTI
CHECKED BY
REVISED BY
DATE REVISED

LAST REVISION 06-15-11
DATE PLOTTED => 10-NOV-2011
TIME PLOTTED => 16:55

Dist	COUNTY	ROUTE	POST MILES TOTAL PROJECT	SHEET No.	TOTAL SHEETS
03	ED	50	78.9/79.5	17	78

REGISTERED CIVIL ENGINEER 6-23-11 DATE

11-7-11
PLANS APPROVAL DATE

REGISTERED PROFESSIONAL ENGINEER R. REAL No. 72044 Exp. 6-30-12 CIVIL STATE OF CALIFORNIA

THE STATE OF CALIFORNIA OR ITS OFFICERS OR AGENTS SHALL NOT BE RESPONSIBLE FOR THE ACCURACY OR COMPLETENESS OF SCANNED COPIES OF THIS PLAN SHEET.

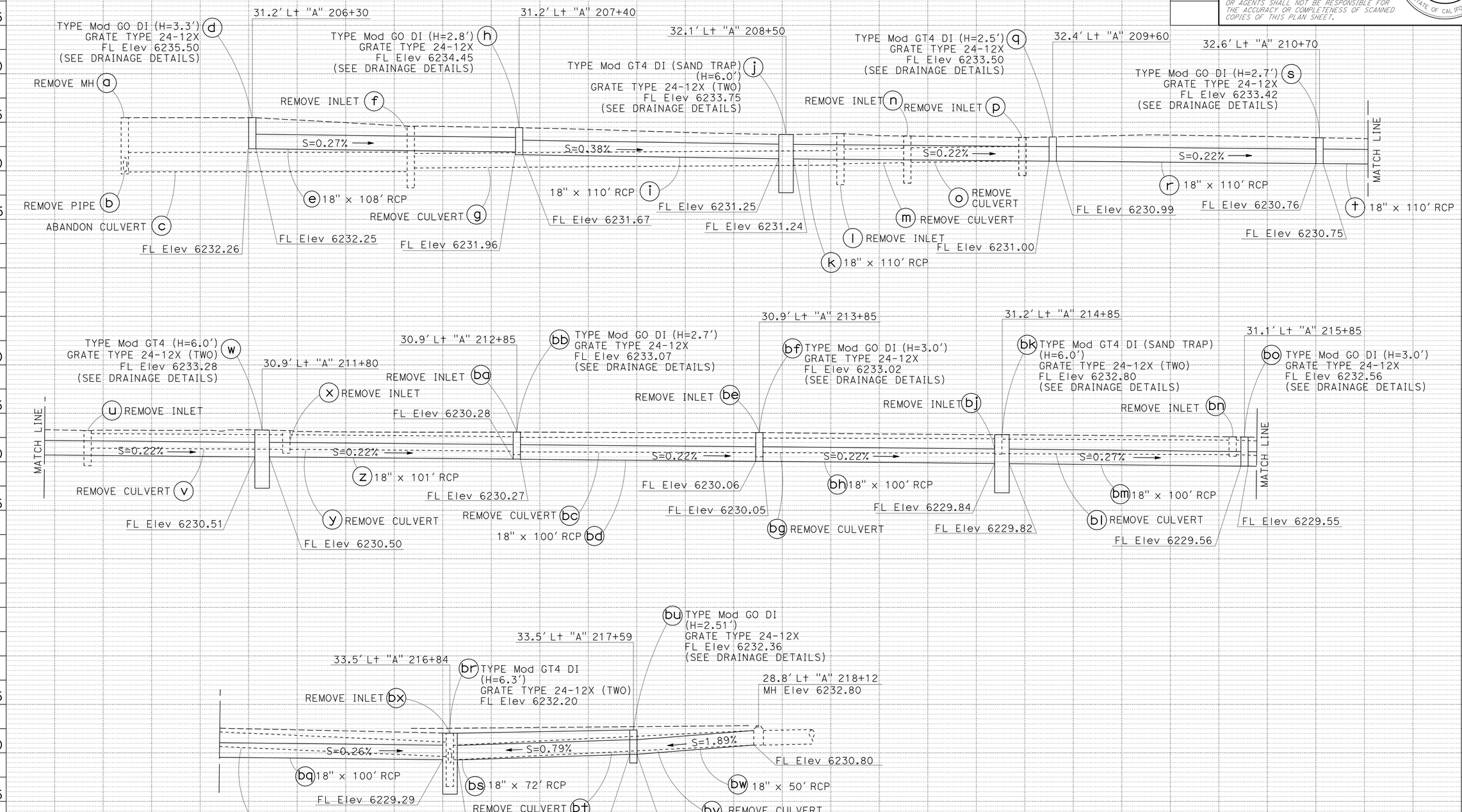

DRAINAGE SYSTEM No. 3

DRAINAGE PROFILES

SCALE: Horiz 1" = 20'
Vert 1" = 5'

DP-3

REVISED BY | DATE REVISED

ANAND MAGANTI

CALCULATED-DESIGNED BY | CHECKED BY

FUNCTIONAL SUPERVISOR

TAREK TABSHOURI

STATE OF CALIFORNIA - DEPARTMENT OF TRANSPORTATION

Caltrans

LAST REVISION 06-15-11 | DATE PLOTTED => 10-NOV-2011 | TIME PLOTTED => 16:55

Dist	COUNTY	ROUTE	POST MILES TOTAL PROJECT	SHEET No.	TOTAL SHEETS
03	ED	50	78.9/79.5	18	78

REGISTERED CIVIL ENGINEER 6-23-11 DATE

11-7-11
PLANS APPROVAL DATE

REGISTERED PROFESSIONAL ENGINEER R. REAL No. 72044 Exp. 6-30-12 CIVIL STATE OF CALIFORNIA

THE STATE OF CALIFORNIA OR ITS OFFICERS OR AGENTS SHALL NOT BE RESPONSIBLE FOR THE ACCURACY OR COMPLETENESS OF SCANNED COPIES OF THIS PLAN SHEET.

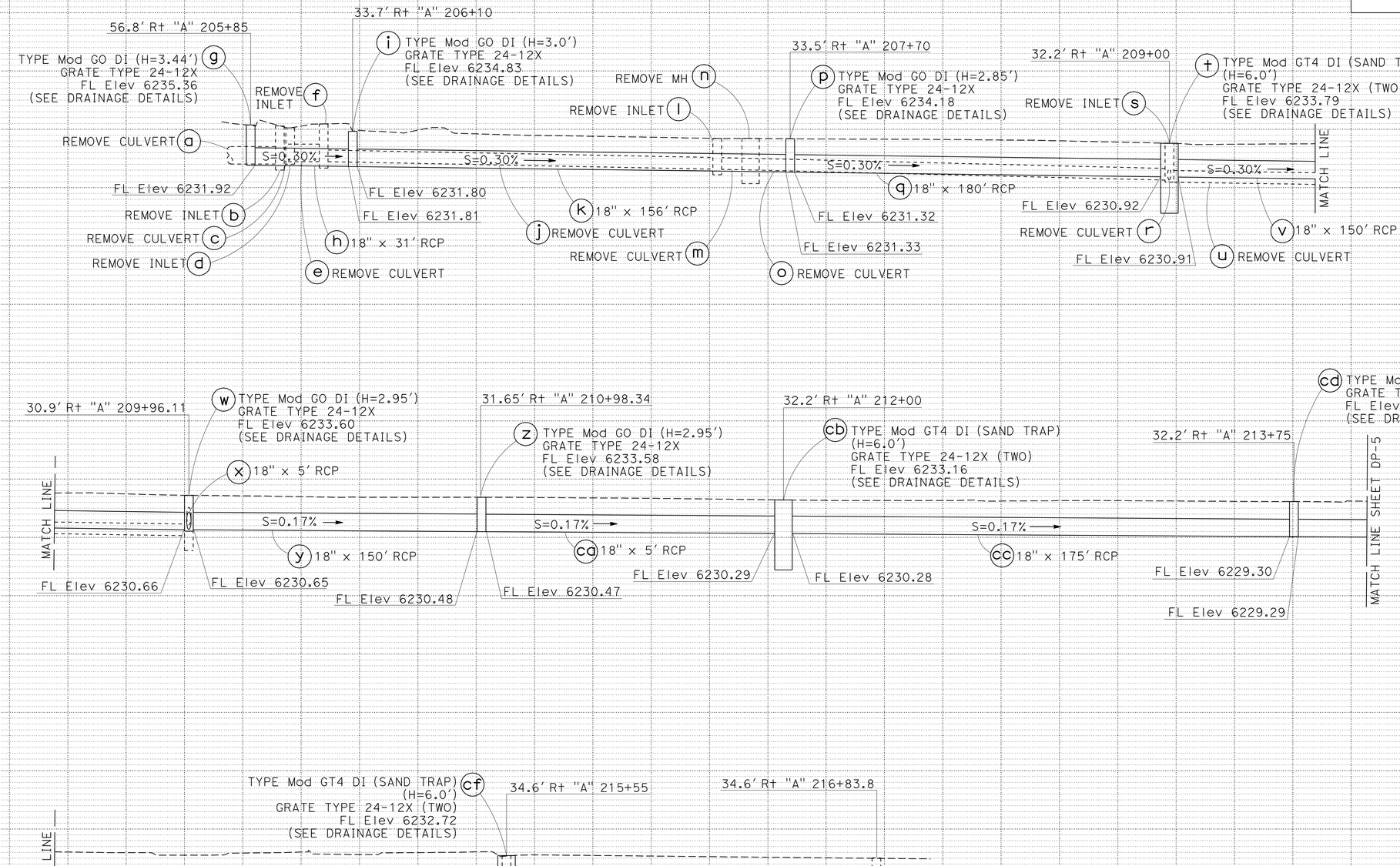

DRAINAGE SYSTEM No. 4

DRAINAGE PROFILES

SCALE: Horiz 1" = 20'
Vert 1" = 5'

DP-4

STATE OF CALIFORNIA - DEPARTMENT OF TRANSPORTATION
Caltrans

FUNCTIONAL SUPERVISOR: TAREK TABSHOURI
CALCULATED-DESIGNED BY: ANAND MAGANTI
CHECKED BY
REVISED BY
DATE REVISED

LAST REVISION 06-15-11
DATE PLOTTED => 10-NOV-2011
TIME PLOTTED => 16:55

Dist	COUNTY	ROUTE	POST MILES TOTAL PROJECT	SHEET No.	TOTAL SHEETS
03	ED	50	78.9/79.5	19	78

M Anand 10-24-11
REGISTERED CIVIL ENGINEER DATE

11-7-11
PLANS APPROVAL DATE

REGISTERED PROFESSIONAL ENGINEER
A. MAGANTI
No. C74128
Exp. 6-30-13
CIVIL
STATE OF CALIFORNIA

THE STATE OF CALIFORNIA OR ITS OFFICERS OR AGENTS SHALL NOT BE RESPONSIBLE FOR THE ACCURACY OR COMPLETENESS OF SCANNED COPIES OF THIS PLAN SHEET.

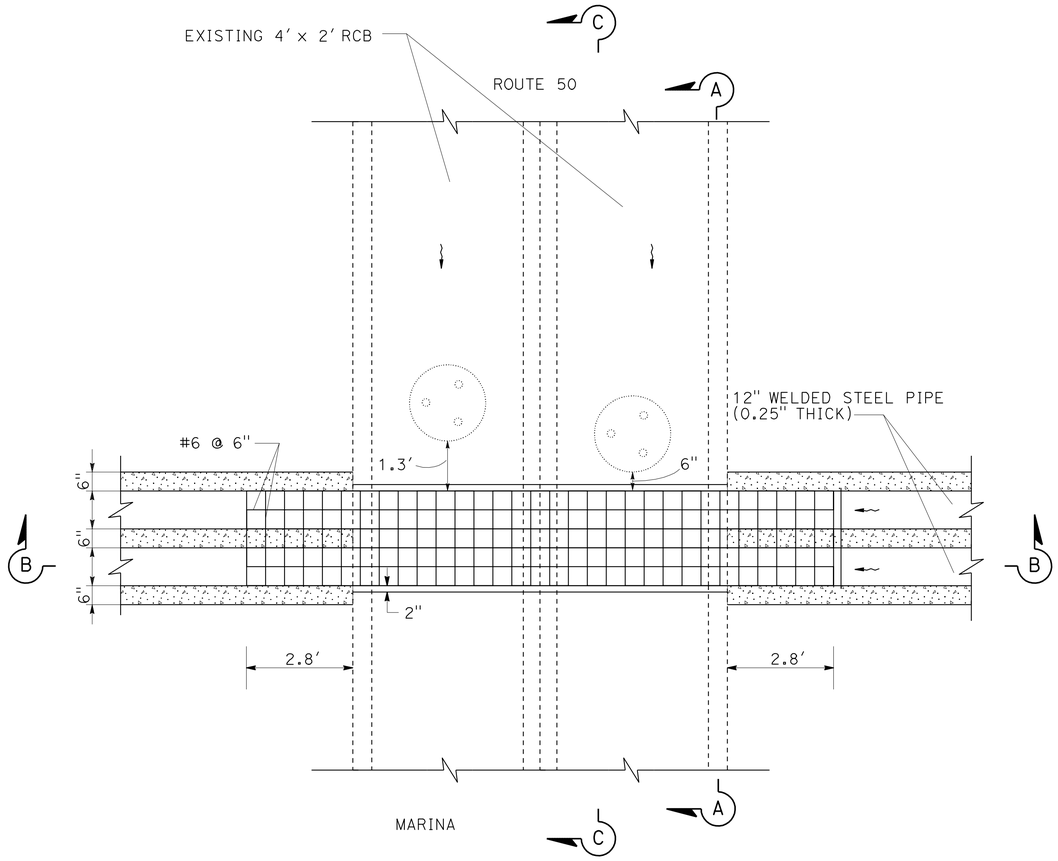

PLAN VIEW
SYSTEM 1 Ⓟ "A" 205+37.80 Lt 39.15

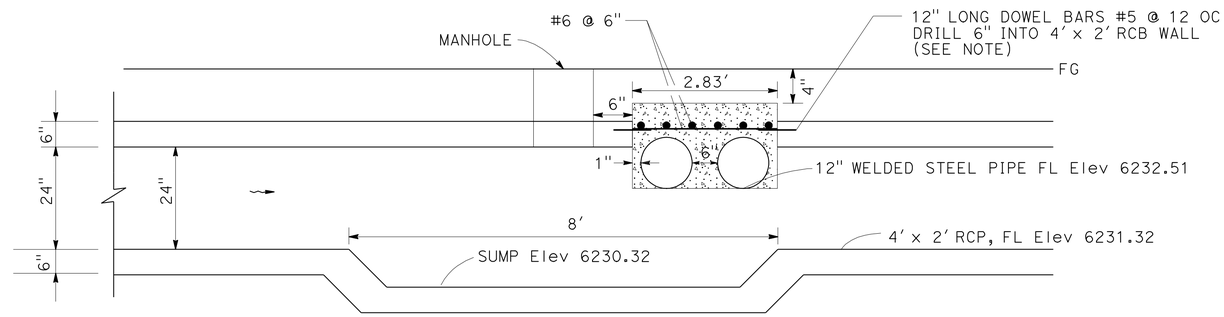

SECTION A-A

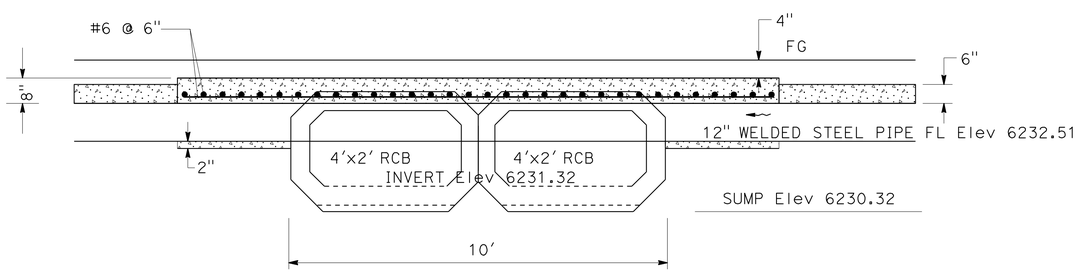

SECTION B-B

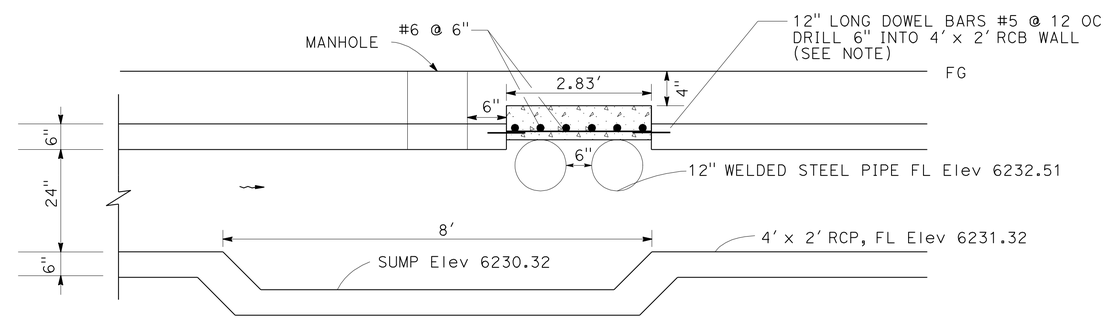

SECTION C-C

NOTE: HOLE SIZES AND BONDING MATERIAL AS PER
2010 STANDARD SPECIFICATIONS, SECTION 51-1.03E(3)

MODIFY EXISTING TWO 4' x 2' REINFORCED CONCRETE BOX

DRAINAGE DETAILS

NO SCALE

DD-1

STATE OF CALIFORNIA - DEPARTMENT OF TRANSPORTATION
Caltrans®
NORTH REGION
DIVISION OF ENGINEERING
BRANCH M4

FUNCTIONAL SUPERVISOR: TAREK TABSHOURI

CALCULATED-DESIGNED BY: ANAND MAGANTI
CHECKED BY: TAREK TABSHOURI

REVISED BY | DATE REVISED

LAST REVISION 10-24-11 | DATE PLOTTED => 10-NOV-2011 | TIME PLOTTED => 16:55

Dist	COUNTY	ROUTE	POST MILES TOTAL PROJECT	SHEET No.	TOTAL SHEETS
03	ED	50	78.9/79.5	20	78

REGISTERED CIVIL ENGINEER 6-23-11 DATE

11-7-11
PLANS APPROVAL DATE

REGISTERED PROFESSIONAL ENGINEER R. REAL No. 72044 Exp. 6-30-12 CIVIL STATE OF CALIFORNIA

THE STATE OF CALIFORNIA OR ITS OFFICERS OR AGENTS SHALL NOT BE RESPONSIBLE FOR THE ACCURACY OR COMPLETENESS OF SCANNED COPIES OF THIS PLAN SHEET.

NOTE:
FOR ADDITIONAL DETAILS SEE RSP D74B

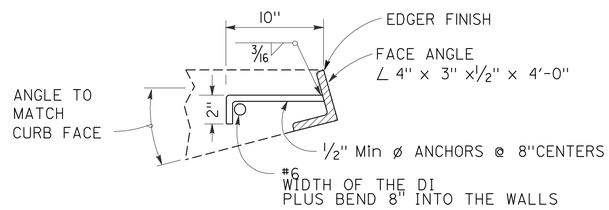

MODIFIED FACE ANGLE ANCHOR DETAIL

MODIFIED GO DRAINAGE INLET

MODIFIED GO DI INDEX

DRAINAGE SYSTEM	DRAINAGE UNIT	STATION
1	a	199+56.8 Lt
	e	201+26.8 Lt
	i	203+00.2 Lt
	k	204+60.1 Lt
2	a	199+59.3 Rt
	f	201+68.4 Rt
3	d	206+30.0 Lt
	h	207+40.1 Lt
	q	209+60.1 Lt
	s	210+70.0 Lt
	bb	212+85.3 Lt
	bf	213+85.0 Lt
	bo	215+83.1 Lt
	bu	217+59.3 Lt
4	g	208+84.3 Rt
	j	206+10.5 Rt
	p	207+69.9 Rt
	w	209+96.9 Rt
	z	210+97.7 Rt
	cd	213+94.8 Rt

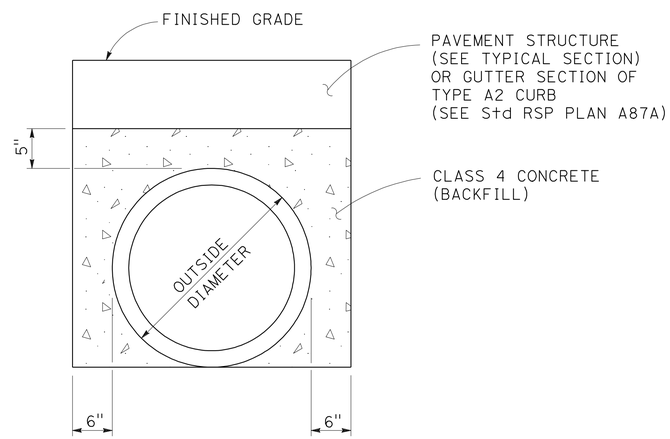

CONCRETE BACKFILL DETAIL

FOR DETAIL, TYPE OF INSTALLATION, AND
NOTES NOT SHOWN SEE REVISED STANDARD PLAN A62DA

DRAINAGE DETAILS

NO SCALE

DD-2

REVISED BY | DATE REVISED
REBECCA REAL | ANAND MAGANTI
CALCULATED-DESIGNED BY | CHECKED BY
FUNCTIONAL SUPERVISOR
TAREK TABSHOURI

STATE OF CALIFORNIA - DEPARTMENT OF TRANSPORTATION
Caltrans
NORTH REGION
DIVISION OF ENGINEERING
BRANCH M4

LAST REVISION 06-15-11 | DATE PLOTTED => 10-NOV-2011 | TIME PLOTTED => 16:55

Dist	COUNTY	ROUTE	POST MILES TOTAL PROJECT	SHEET No.	TOTAL SHEETS
03	ED	50	78.9/79.5	21	78

REGISTERED CIVIL ENGINEER 6-23-11 DATE

11-7-11
PLANS APPROVAL DATE

REGISTERED PROFESSIONAL ENGINEER R. REAL No. 72044 Exp. 6-30-12 CIVIL STATE OF CALIFORNIA

THE STATE OF CALIFORNIA OR ITS OFFICERS OR AGENTS SHALL NOT BE RESPONSIBLE FOR THE ACCURACY OR COMPLETENESS OF SCANNED COPIES OF THIS PLAN SHEET.

NOTES:

1. THE DIMENSIONS OF THE DRAINAGE INLET MARKER (STAMPED) SHALL VARY NO MORE THAN 1" IN WIDTH AND LENGTH.
2. THE DRAINAGE INLET MARKER SHALL BE CENTERED ON THE DRAINAGE FACILITY.
3. USE ONLY ONE DRAINAGE INLET MARKER PER DRAINAGE FACILITY.

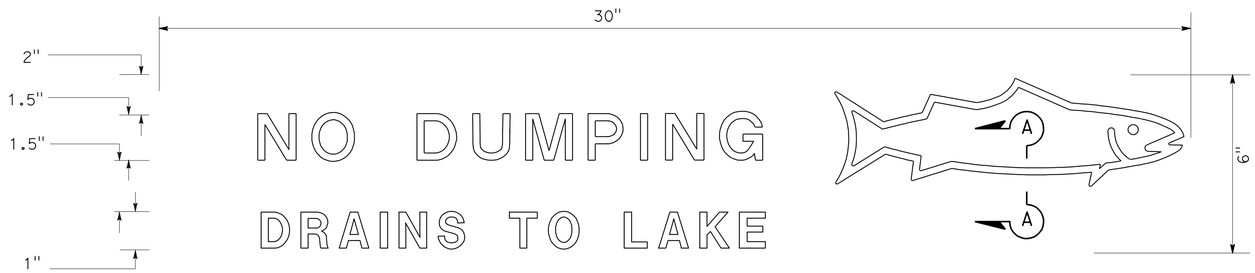

PLAN

DRAINAGE INLET MARKER (STAMPED)

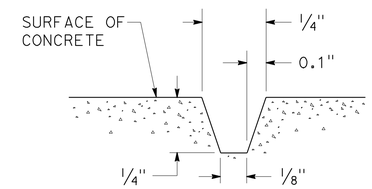

SECTION A-A

DEPTH OF DRAINAGE INLET MARKER (STAMPED)

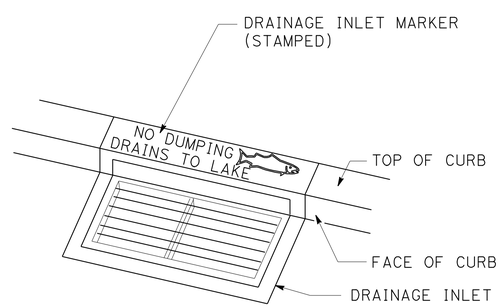

PERSPECTIVE

DRAINAGE INLET MARKER ON DRAINAGE INLET

DRAINAGE DETAILS

NO SCALE

DD-3

STATE OF CALIFORNIA - DEPARTMENT OF TRANSPORTATION
Caltrans
NORTH REGION
DIVISION OF ENGINEERING
BRANCH M4

FUNCTIONAL SUPERVISOR: TAREK TABSHOURI

CALCULATED-DESIGNED BY: REBECCA REAL
CHECKED BY: ANAND MAGANTI

REVISED BY
DATE REVISED

LAST REVISION 06-15-11
DATE PLOTTED => 10-NOV-2011
TIME PLOTTED => 16:55

Dist	COUNTY	ROUTE	POST MILES TOTAL PROJECT	SHEET No.	TOTAL SHEETS
03	ED	50	78.9/79.5	22	78

REGISTERED CIVIL ENGINEER 6-23-11 DATE

11-7-11
PLANS APPROVAL DATE

REGISTERED PROFESSIONAL ENGINEER R. REAL No. 72044 Exp. 6-30-12 CIVIL STATE OF CALIFORNIA

THE STATE OF CALIFORNIA OR ITS OFFICERS OR AGENTS SHALL NOT BE RESPONSIBLE FOR THE ACCURACY OR COMPLETENESS OF SCANNED COPIES OF THIS PLAN SHEET.

MODIFIED GT4 DRAINAGE INLET (SAND TRAP)

DRAINAGE SYSTEM	DRAINAGE UNIT	STATION
1	m	204+89.0 Lt
	q	206+02.5 Lt
2	k	203+40.5 Rt
3	j	208+50.2 Lt
	w	211+80.0 Lt
	bk	214+85.0 Lt
	br	216+83.0 Lt
4	t	209+00.0 Rt
	cb	211+85.6 Rt
	cf	215+57.4 Rt

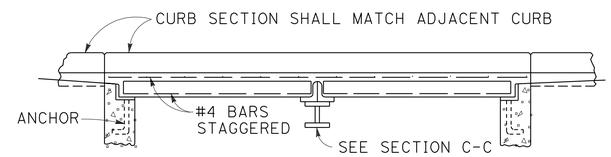

SECTION A-A

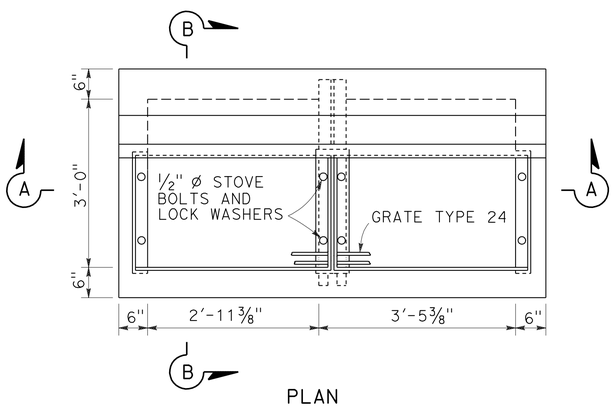

PLAN

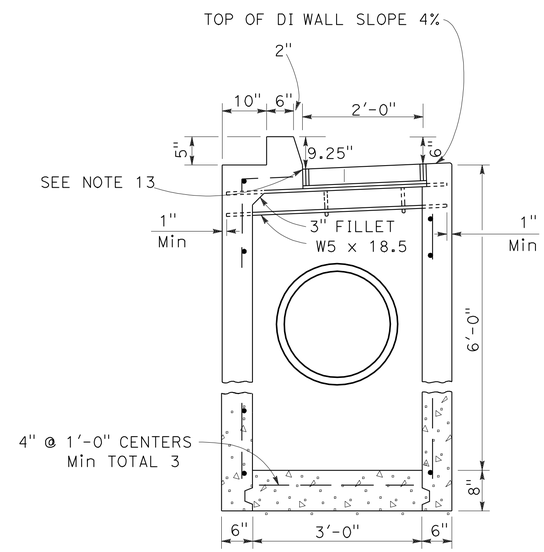

SECTION B-B

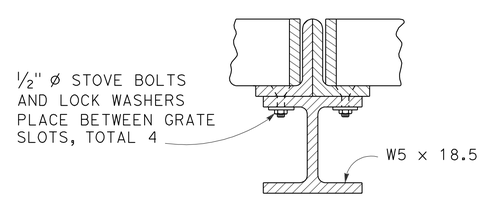

SECTION C-C

NOTES:

1. "H" IS THE DIFFERENCE IN ELEVATION BETWEEN THE FLOOR AND THE NORMAL GUTTER GRADE LINE UNDEPRESSED AT THE GUTTER FLOW LINE.
2. WALL REINFORCING NOT REQUIRED FOR SIDE WALLS WITH LENGTH OF 4'-0". THE LONG WALLS SHALL BE REINFORCED WITH #4 BARS @ 1'-6" ± CENTERS PLACED 1½" CLEAR TO INSIDE OF BOX.
3. STEPS - INSTALL STEPS WITH LOWEST RUNG 1'-0" ABOVE THE FLOOR AND HIGHEST RUNG NOT MORE THAN 6" BELOW TOP OF INLET. THE DISTANCE BETWEEN STEPS SHALL NOT EXCEED 1'-0" AND SHALL BE UNIFORM THROUGHOUT THE LENGTH OF THE WALL. PLACE STEPS IN THE WALL WITHOUT AN OPENING. STEP INSERTS MAY BE SUBSTITUTED FOR THE BAR STEPS. STEP INSERTS SHALL COMPLY WITH STATE INDUSTRIAL SAFETY REQUIREMENT. SEE REVISED STANDARD PLAN D74C FOR STEP DETAILS.
4. PIPE(S) CAN BE PLACED IN ANY WALL.
5. BASIN FLOORS SHALL HAVE WOOD TROWEL FINISH.
6. GALVANIZING - SEE STANDARD SPECIFICATIONS OR SPECIAL PROVISIONS.
7. SEE REVISED STANDARD PLANS D77A AND D77B FOR GRATE AND FRAME DETAILS AND WEIGHTS OF MISCELLANEOUS IRON AND STEEL.
8. SEE REVISED STANDARD PLAN D78A FOR GUTTER DEPRESSION DETAILS.
9. FULL PENETRATION BUTT WELDS MAY BE SUBSTITUTED FOR THE FILLET WELDS ON ALL ANCHORS.
10. STANDARD SQUARE, HEXAGON, ROUND OR EQUIVALENT HEADED ANCHORS MAY BE SUBSTITUTED FOR THE RIGHT ANGLE HOOKS ON THE ANCHORS SHOWN ON THIS PLAN.
11. CAST-IN-PLACE OR PRECAST ALTERNATIVE IS OPTIONAL WITH CONTRACTOR. SEE STANDARD SPECIFICATIONS.
12. CAST-IN-PLACE INLETS TO BE FORMED AROUND ALL PIPES/STUBS INTERSECTING THE INLET AND CONCRETE POURED IN ONE CONTINUOUS OPERATION. PRECAST INLETS SHALL HAVE MORTARED PIPE CONNECTIONS CONFORMING TO DETAILS FOR TYPE GCP INLET ON REVISED STANDARD PLAN D75B. SEE STANDARD SPECIFICATIONS FOR MORTAR COMPOSITION.
13. FL OF THE DI MUST BE MATCHED TO FL ELEV IN PROFILE AND DEDUCTING GUTTER DEPRESSION 11/4 INCH PER STANDARD PLAN D78A

MODIFIED GT4 DRAINAGE INLET (SAND TRAP)

DRAINAGE DETAILS

NO SCALE

DD-4

STATE OF CALIFORNIA - DEPARTMENT OF TRANSPORTATION
Caltrans
NORTH REGION
DIVISION OF ENGINEERING
BRANCH M4

FUNCTIONAL SUPERVISOR: TAREK TABSHOURI
CALCULATED-DESIGNED BY: REBECCA REAL
CHECKED BY: ANAND MAGANTI
REVISED BY
DATE REVISED

LAST REVISION 06-15-11
DATE PLOTTED => 10-NOV-2011
TIME PLOTTED => 16:56

NOTE:

FOR DETAILS NOT SHOWN SEE STANDARD PLAN RSP D74B

Mod GO-MH DI

DRAINAGE SYSTEM	DRAINAGE UNIT	STATION
1	C	127+30 Rt
2	C	131+65 Rt

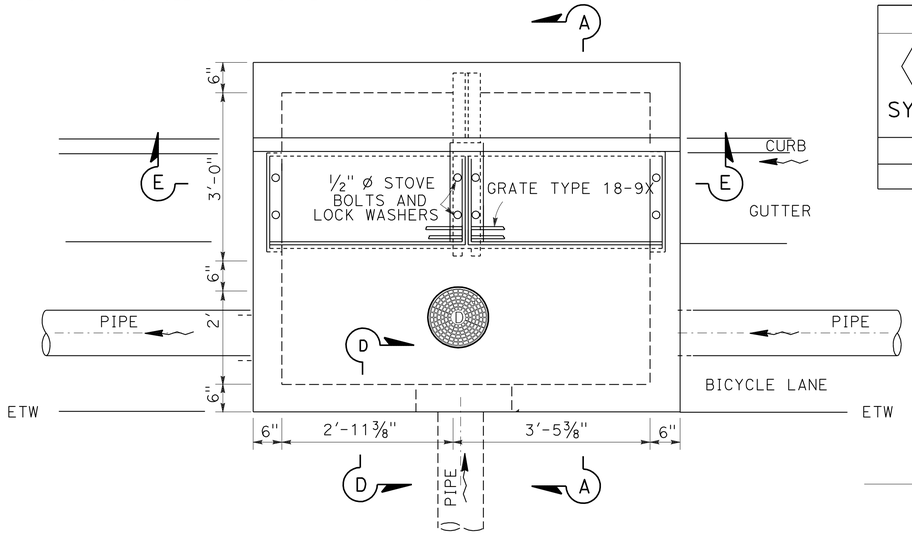

PLAN

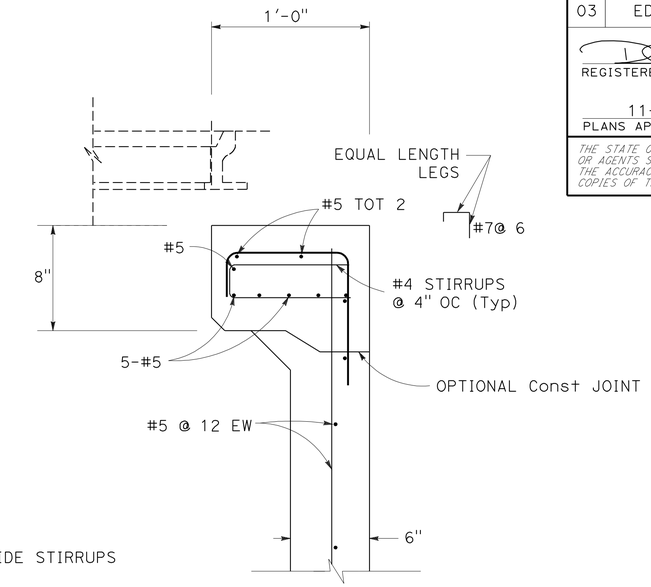

SECTION D-D

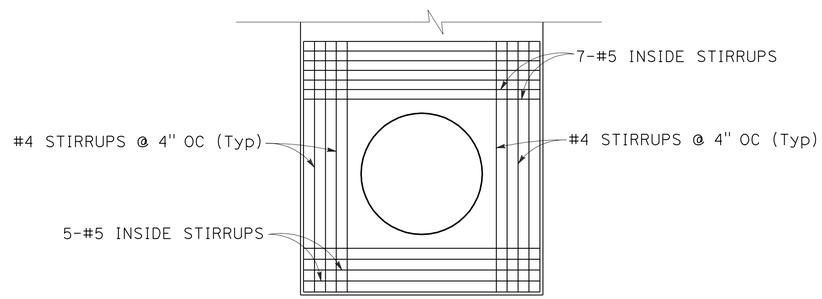

LOWER MAT REINFORCEMENT

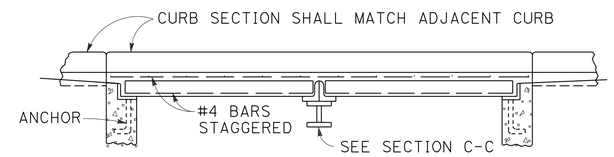

SECTION E-E

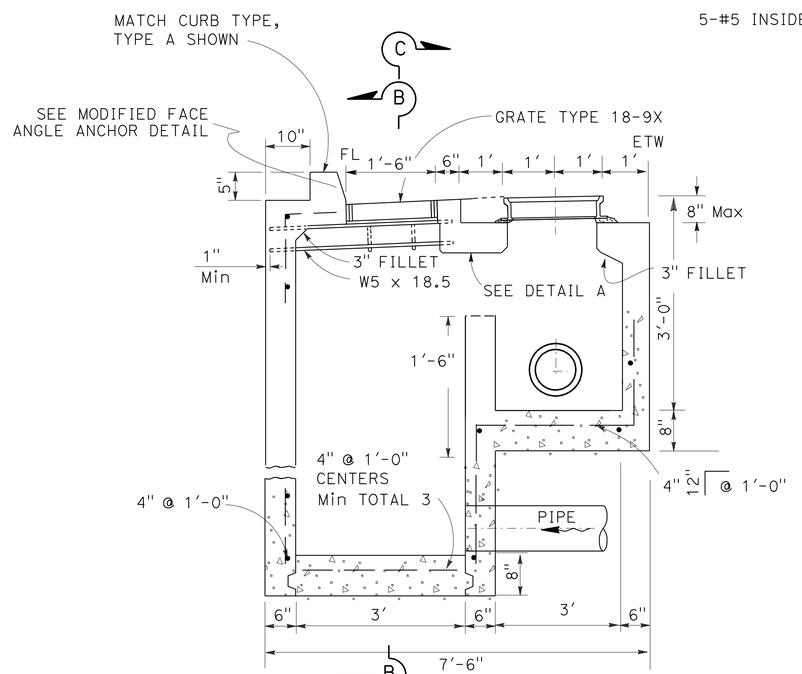

SECTION A-A

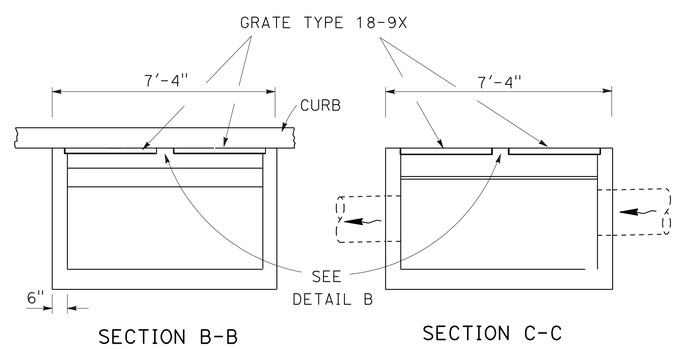

SECTION B-B SECTION C-C

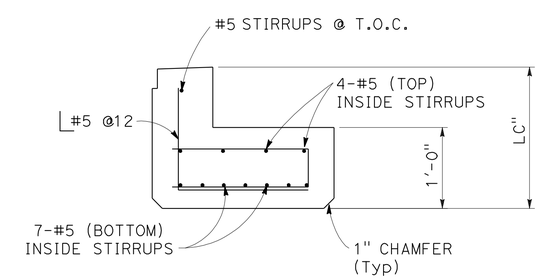

DETAIL A

MODIFIED GO-MH DRAINAGE INLET WITH MANHOLE FRAME AND COVER

DRAINAGE DETAILS

NO SCALE

DD-5

Dist	COUNTY	ROUTE	POST MILES TOTAL PROJECT	SHEET No.	TOTAL SHEETS
03	ED	50	78.9/79.5	23	78

REGISTERED CIVIL ENGINEER 6-23-11 DATE

11-7-11 PLANS APPROVAL DATE

REGISTERED PROFESSIONAL ENGINEER R. REAL No. 72044 Exp. 6-30-12 CIVIL STATE OF CALIFORNIA

THE STATE OF CALIFORNIA OR ITS OFFICERS OR AGENTS SHALL NOT BE RESPONSIBLE FOR THE ACCURACY OR COMPLETENESS OF SCANNED COPIES OF THIS PLAN SHEET.

REVISED BY | DATE REVISED

REBECCA REAL | ANAND MAGANTI

CALCULATED-DESIGNED BY | CHECKED BY

FUNCTIONAL SUPERVISOR: TAREK TABSHOURI

STATE OF CALIFORNIA - DEPARTMENT OF TRANSPORTATION
NORTH REGION
DIVISION OF ENGINEERING
BRANCH M4
Caltrans

LAST REVISION 06-15-11 | DATE PLOTTED => 10-NOV-2011 | TIME PLOTTED => 16:56

Dist	COUNTY	ROUTE	POST MILES TOTAL PROJECT	SHEET No.	TOTAL SHEETS
03	ED	50	78.9/79.5	24	78

REGISTERED CIVIL ENGINEER 6-23-11 DATE

11-7-11
PLANS APPROVAL DATE

REGISTERED PROFESSIONAL ENGINEER
R. REAL
No. 72044
Exp. 6-30-12
CIVIL
STATE OF CALIFORNIA

THE STATE OF CALIFORNIA OR ITS OFFICERS OR AGENTS SHALL NOT BE RESPONSIBLE FOR THE ACCURACY OR COMPLETENESS OF SCANNED COPIES OF THIS PLAN SHEET.

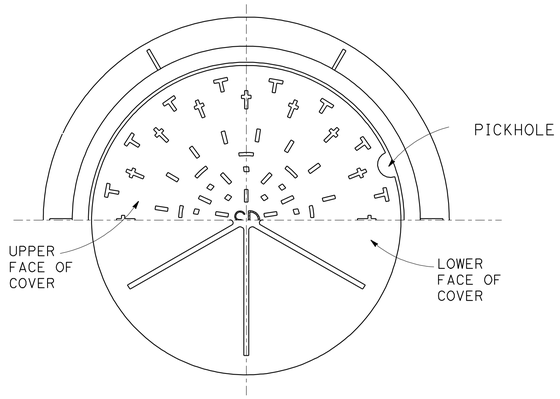

HALF PLAN OF MH FRAME AND COVER
SEE BELOW FOR DIMENSIONS OF LETTERS "SD"

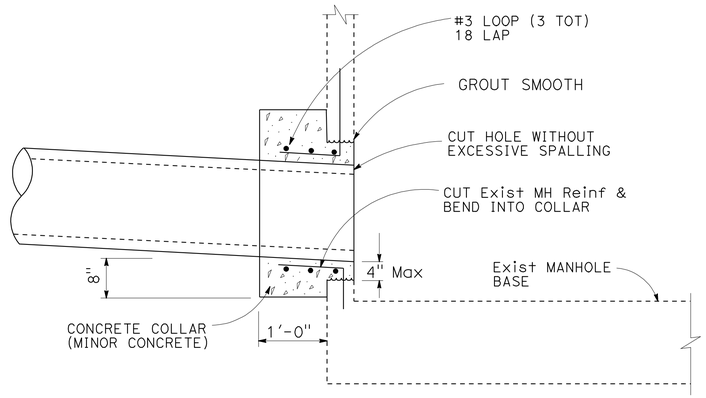

CONNECTION TO EXISTING MANHOLE

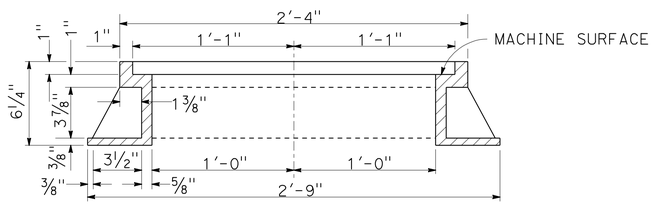

SECTION ON ℄ THROUGH FRAME

APPROX WEIGHTS:
FRAME - 210 lb
COVER - 175 lb
TOTAL 385 lb

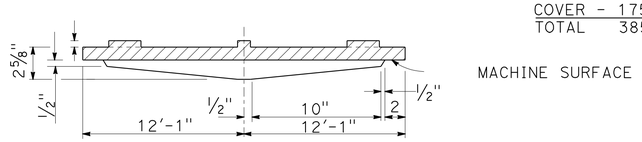

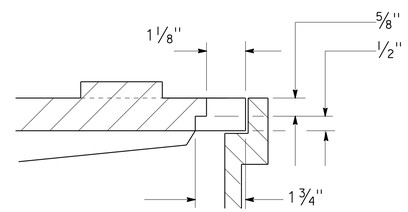

PICK HOLE DETAIL

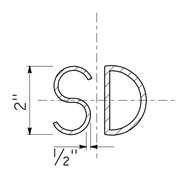

LETTERS "SD" AT CENTER OF COVER

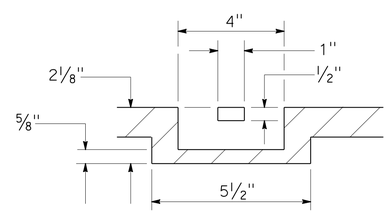

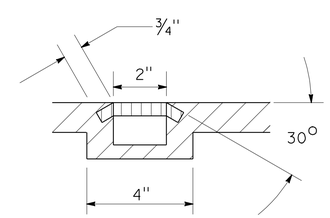

LIFT SOCKET DETAIL

DRAINAGE DETAILS

NO SCALE

DD-6

STATE OF CALIFORNIA - DEPARTMENT OF TRANSPORTATION
Caltrans
NORTH REGION
DIVISION OF ENGINEERING
BRANCH M4

FUNCTIONAL SUPERVISOR: TAREK TABSHOURI
CALCULATED-DESIGNED BY: REBECCA REAL
CHECKED BY: ANAND MAGANTI
REVISED BY
DATE REVISED

LAST REVISION 06-15-11
DATE PLOTTED => 14-NOV-2011
TIME PLOTTED => 09:47

Dist	COUNTY	ROUTE	POST MILES TOTAL PROJECT	SHEET No.	TOTAL SHEETS
03	ED	50	78.9/79.5	25	78

M Anand 6-23-11
REGISTERED CIVIL ENGINEER DATE

11-7-11
PLANS APPROVAL DATE

REGISTERED PROFESSIONAL ENGINEER
A. MAGANTI
No. C74128
Exp. 6-30-13
CIVIL
STATE OF CALIFORNIA

THE STATE OF CALIFORNIA OR ITS OFFICERS OR AGENTS SHALL NOT BE RESPONSIBLE FOR THE ACCURACY OR COMPLETENESS OF SCANNED COPIES OF THIS PLAN SHEET.

DRAINAGE ITEMS

DRAINAGE SYSTEM No.	DRAINAGE PLAN SHEET No.	DRAINAGE UNIT	ABANDON CULVERT	REMOVE CULVERT	REMOVE MANHOLE	REMOVE INLET	REMOVE JUNCTION BOX	15" PP	24" RCP	12" WSP	18" RCP	MINOR CONCRETE (BACKFILL)	INLET TYPE Mod GO DI (N)	INLET TYPE Mod GO-MH DI (N)	INLET TYPE Mod GT4 DI (SAND TRAP) (N)	MANHOLE FRAME AND COVER (N)	MODIFY EXISTING RCB	HEIGHT OF INLET OR MH "H" (N)	MINOR CONCRETE (MINOR STRUCTURE)	LADDER (N)	MISCELLANEOUS IRON & STEEL	FRAME & GRATE TYPE 18-9X (N)	FRAME & GRATE TYPE 24-12X (N)	DRAINAGE INLET MARKER	MAXIMUM COVER (N)	DESCRIPTION	STATION	DRAINAGE SYSTEM No.	DRAINAGE PLAN SHEET No.	DRAINAGE UNIT
			EA	LF	EA	EA	EA	LF	LF	LF	LF	CY	EA	EA	EA	LB	EA	LF	CY	EA	LB	EA	EA	EA	LF					
1	D-1	za				1																				REMOVE DI		1	D-1	za
		zb		26																						REMOVE CULVERT				zb
		zc					1																			REMOVE Jct BOX				zc
		zd		52																						REMOVE CULVERT				zd
		ze							67			33.5														24" x 67' RCP				ze
		zf		16																						REMOVE CULVERT				zf
		zg						3.0				1.0														15" x 3' PP				zg
		a											1					2.5	1.2	1	239		1	1	N/A	TYPE Mod GO DI	199+57			a
		b									21.0	7.1														18" x 21' RCP				b
		c												1		400		6.0	2.0	1	239	1		1	N/A	TYPE Mod GO-MH DI	199+85			c
		d									134.0	45.0														18" x 134' RCP				d
		e											1					3.3	1.3	1	239		1	1	N/A	TYPE Mod GO DI	201+25			e
	D-2	f				1																				REMOVE DI			D-2	f
		g	1																							Abn CULVERT				g
		h									192.0	64.5														18" x 192' RCP				h
		i											1					3.7	1.4	1	239		1	1	N/A	TYPE Mod GO DI	203+00			i
		j									158.0	53.1														18" x 158' RCP				j
		k											1					3.2	1.3	1	239		1	1	N/A	TYPE Mod GO DI	204+60			k
		l									24.0	8.1														18" x 24' RCP				l
		m													1			3.0	2.2	1	478		2	1	N/A	TYPE Mod GT4	204+86			m
		n								114.0		25.9														12" x 114' WSP				n
		o								114.0		25.9														12" x 114' WSP				o
		p															1									MODIFY EXISTING RCB				p
		q													1			3.1	2.2	1	478		2	1	N/A	TYPE Mod GT4	206+04			q
		r									23.0	7.7														18" x 23' RCP				r
SUBTOTAL			1	94		2	1	3.0	67	228.0	552.0	271.8	4	1	2	400	1	24.3	11.6	7	2151	1	8	7		SUBTOTAL				

(N) NOT A SEPARATE PAY ITEM, FOR INFORMATION ONLY.

DRAINAGE QUANTITIES

DQ-1

STATE OF CALIFORNIA - DEPARTMENT OF TRANSPORTATION
Caltrans
NORTH REGION
DIVISION OF ENGINEERING
BRANCH M4

FUNCTIONAL SUPERVISOR: TAREK TABSHOURI

CALCULATED-DESIGNED BY: ANAND MAGANTI
CHECKED BY: TAREK TABSHOURI
REVISED BY
DATE REVISED

LAST REVISION 06-15-11
DATE PLOTTED => 14-NOV-2011
TIME PLOTTED => 09:51

Dist	COUNTY	ROUTE	POST MILES TOTAL PROJECT	SHEET No.	TOTAL SHEETS
03	ED	50	78.9/79.5	26	78

M Anand 6-23-11
REGISTERED CIVIL ENGINEER DATE

11-7-11
PLANS APPROVAL DATE

REGISTERED PROFESSIONAL ENGINEER A. MAGANTI No. C74128 Exp. 6-30-13 CIVIL STATE OF CALIFORNIA

THE STATE OF CALIFORNIA OR ITS OFFICERS OR AGENTS SHALL NOT BE RESPONSIBLE FOR THE ACCURACY OR COMPLETENESS OF SCANNED COPIES OF THIS PLAN SHEET.

DRAINAGE ITEMS

DRAINAGE SYSTEM No.	DRAINAGE PLAN SHEET No.	DRAINAGE UNIT	ABANDON CULVERT	REMOVE CULVERT	REMOVE MANHOLE	REMOVE INLET	REMOVE JUNCTION BOX	15" PP	24" RCP	12" WSP	18" RCP	MINOR CONCRETE (BACKFILL)	INLET TYPE Mod GO DI (N)	INLET TYPE Mod GO-MH DI (N)	INLET TYPE Mod GT4 DI (SAND TRAP) (N)	MANHOLE FRAME AND COVER (N)	MODIFY EXISTING RCB	HEIGHT OF INLET OR MH "H" (N)	MINOR CONCRETE (MINOR STRUCTURE)	LADDER (N)	MISCELLANEOUS IRON & STEEL	FRAME & GRATE TYPE 18-9X (N)	FRAME & GRATE TYPE 24-12X (N)	DRAINAGE INLET MARKER	MAXIMUM COVER (N)	DESCRIPTION	STATION	DRAINAGE SYSTEM No.	DRAINAGE PLAN SHEET No.	DRAINAGE UNIT
			EA	LF	EA	EA	EA	LF	LF	LF	LF	CY	EA	EA	EA	LB	EA	LF	CY	EA	LB	EA	EA	EA	LF					
2	D-1	za				1																				REMOVE DI		2	D-1	za
		zb		26																						REMOVE CULVERT				zb
		zc						3				1.0														15" x 3' PP				zc
		a											1					2.0	1.2	1	239		1	1	N/A	TYPE Mod GO DI	199+59			a
		b									21.0	7.1														18" x 21' RCP				b
		c												1		400		6.1	2.5	1	239	1		1	N/A	TYPE Mod GO-MH DI	199+85			c
		d									179.0	60.1														18" x 179' RCP				d
	D-2	e				1																				REMOVE DI			D-2	e
		f											1					3.7	1.4	1	239		1	1	N/A	TYPE Mod GO DI	201+70			f
		g		7																						REMOVE CULVERT				g
		h			1																					REMOVE MH				h
		i		167																						REMOVE CULVERT				i
		j									167.0	56.1														18" x 167' RCP				j
		k													1			6.0	3.3	1	478		2	1	N/A	TYPE Mod GT4 DI	203+40			k
		l				1																				REMOVE DI				l
		m		124									1													REMOVE CULVERT				m
		n									124.0	41.7														18" x 124' RCP				n
		o											1					2.4	1.2	1	239		1	1	N/A	TYPE Mod GO DI	204+70			o
		p				1																				REMOVE DI				p
		q							76.0			34.7														24" x 76' PP				q
		r		27																						REMOVE CULVERT				r
SUBTOTAL				351	1	4		3	76.0		491.0	200.7	4	1	1	400		20.2	9.6	5	1434	1	5	5		SUBTOTAL				

(N) NOT A SEPARATE PAY ITEM, FOR INFORMATION ONLY.

DRAINAGE QUANTITIES

DQ-2

CALCULATED-DESIGNED BY ANAND MAGANTI
CHECKED BY TAREK TABSHOURI
REVISED BY
DATE REVISED
FUNCTIONAL SUPERVISOR TAREK TABSHOURI

STATE OF CALIFORNIA - DEPARTMENT OF TRANSPORTATION
Caltrans
NORTH REGION
DIVISION OF ENGINEERING
BRANCH M4

LAST REVISION 06-15-11 DATE PLOTTED => 14-NOV-2011 TIME PLOTTED => 09:52

Dist	COUNTY	ROUTE	POST MILES TOTAL PROJECT	SHEET No.	TOTAL SHEETS
03	ED	50	78.9/79.5	27	78

M Anand 6-23-11
REGISTERED CIVIL ENGINEER DATE

11-7-11
PLANS APPROVAL DATE

REGISTERED PROFESSIONAL ENGINEER A. MAGANTI No. C74128 Exp. 6-30-13 CIVIL STATE OF CALIFORNIA

THE STATE OF CALIFORNIA OR ITS OFFICERS OR AGENTS SHALL NOT BE RESPONSIBLE FOR THE ACCURACY OR COMPLETENESS OF SCANNED COPIES OF THIS PLAN SHEET.

DRAINAGE ITEMS

DRAINAGE SYSTEM No.	DRAINAGE PLAN SHEET No.	DRAINAGE UNIT	ABANDON CULVERT	REMOVE CULVERT	REMOVE MANHOLE	REMOVE INLET	REMOVE JUNCTION BOX	15" PP	24" RCP	12" WSP	18" RCP	MINOR CONCRETE (BACKFILL)	INLET TYPE (N) Mod GO DI	INLET TYPE (N) Mod GO-MH DI	INLET TYPE (N) Mod GT4 DI (SAND TRAP)	(N) MANHOLE FRAME AND COVER	MODIFY EXISTING RCB	(N) HEIGHT OF INLET OR MH "H"	MINOR CONCRETE (MINOR STRUCTURE)	(N) LADDER	(N) MISCELLANEOUS IRON & STEEL	(N) FRAME & GRATE TYPE 18-9X	(N) FRAME & GRATE TYPE 24-12X	DRAINAGE INLET MARKER	(N) MAXIMUM COVER	DESCRIPTION	STATION	DRAINAGE SYSTEM No.	DRAINAGE PLAN SHEET No.	DRAINAGE UNIT
			EA	LF	EA	EA	EA	LF	LF	LF	LF	CY	EA	EA	EA	LB	EA	LF	CY	EA	LB	EA	EA	EA	LF					
3	D-2	a			1																					REMOVE MH		3	D-2	a
		b	1																							REMOVE PIPE				b
		c		116																						REMOVE CULVERT				c
		d											1					3.3	1.3	1	239		1	1	N/A	TYPE Mod GO DI	206+30			d
		e									108.0	36.3														18" x 108' RCP				e
		f				1																				REMOVE DI				f
		g		150																						REMOVE CULVERT				g
	D-3	h											1					2.8	1.2	1	239		1	1	N/A	TYPE Mod GO DI	207+40		D-3	h
		i									110.0	37.0														18" x 110' RCP				i
		j													1			6.0	3.3	1	478		2	1	N/A	TYPE Mod GT4 DI	208+50			j
		k									110.0	37.0														18" x 110' RCP				k
		l				1																				REMOVE DI				l
		m		24																						REMOVE CULVERT				m
		n				1																				REMOVE DI				n
		o		44																						REMOVE CULVERT				o
		p				1																				REMOVE DI				p
		q											1					2.5	1.2	1	239		1	1	N/A	TYPE Mod GO DI	209+60			q
		r									110.0	37.0														18" x 110' RCP				r
		s											1					2.7	1.2	1	239		1	1	N/A	TYPE Mod GO DI	210+70			s
		t									110.0	37.0														18" x 110' RCP				t
		u				1																				REMOVE DI				u
		v		68																						REMOVE CULVERT				v
		w													1			6.0	3.3	1	478		2	1	N/A	TYPE Mod GT4 DI	211+80			w
		x				1																				REMOVE DI				x
		y		92																						REMOVE CULVERT				y
		z									101.0	33.9														18" x 101' RCP				z
		ba				1																				REMOVE DI				ba
		bb											1					2.7	1.2	1	239		1	1	N/A	TYPE Mod GO DI	212+85			bb
		bc		97																						REMOVE CULVERT				bc
		bd									100.0	33.6														18" x 100' RCP				bd
	D-4	be				1																				REMOVE DI			D-4	be
		bf											1					3.0	1.2	1	239		1	1	N/A	TYPE Mod GO DI	213+85			bf
		bg		98																						REMOVE CULVERT				bg
		bh									100.0	33.6														18" x 100' RCP				bh
		bj				1																				REMOVE DI				bj
		bk													1			6.0	3.3	1	478		2	1	N/A	TYPE Mod GT4 DI	214+85			bk
		bl		94																						REMOVE CULVERT				bl
		bm									100.0	33.6														18" x 100' RCP				bm
		bn				1																				REMOVE DI				bn
		bo											1					3.0	1.2	1	239		1	1	N/A	TYPE Mod GO DI	215+85			bo
		bp		92																						REMOVE CULVERT				bp
		bq									100.0	33.6														18" x 100' RCP				bq
		br													1			6.3	3.5	1	478		2	1	N/A	TYPE Mod GT4 DI	216+84			br
		bs									72.0	24.2														18" x 72' RCP				bs
		bt		72																						REMOVE CULVERT				bt
		bu											1					2.5	1.2	1	239		1	1	N/A	TYPE Mod GO DI	217+59			bu
		bv		50																						REMOVE CULVERT				bv
		bw									50.0	16.8														18" x 50' RCP				bw
		bx				1																				REMOVE DI				bx
SUBTOTAL			1	997	1	11					1171.0	394.0	8		4			47.0	23.0	12	3824		16	12		SUBTOTAL				

(N) NOT A SEPARATE PAY ITEM, FOR INFORMATION ONLY.

DRAINAGE QUANTITIES

DQ-3

STATE OF CALIFORNIA - DEPARTMENT OF TRANSPORTATION
Caltrans
NORTH REGION
DIVISION OF ENGINEERING
BRANCH M4

FUNCTIONAL SUPERVISOR: TAREK TABSHOURI
CALCULATED-DESIGNED BY: ANAND MAGANTI
CHECKED BY: TAREK TABSHOURI
REVISED BY
DATE REVISED

LAST REVISION 06-15-11
DATE PLOTTED => 14-NOV-2011
TIME PLOTTED => 09:52

Dist	COUNTY	ROUTE	POST MILES TOTAL PROJECT	SHEET No.	TOTAL SHEETS
03	ED	50	78.9/79.5	28	78

M Anand 6-23-11
REGISTERED CIVIL ENGINEER DATE

11-7-11
PLANS APPROVAL DATE

REGISTERED PROFESSIONAL ENGINEER
A. MAGANTI
No. C74128
Exp. 6-30-13
CIVIL
STATE OF CALIFORNIA

THE STATE OF CALIFORNIA OR ITS OFFICERS OR AGENTS SHALL NOT BE RESPONSIBLE FOR THE ACCURACY OR COMPLETENESS OF SCANNED COPIES OF THIS PLAN SHEET.

DRAINAGE ITEMS

DRAINAGE SYSTEM No.	DRAINAGE PLAN SHEET No.	DRAINAGE UNIT	ABANDON CULVERT	REMOVE CULVERT	REMOVE MANHOLE	REMOVE INLET	REMOVE JUNCTION BOX	15" PP	24" RCP	12" WSP	18" RCP	MINOR CONCRETE (BACKFILL)	INLET TYPE Mod GO DI (N)	INLET TYPE Mod GO-MH DI (N)	INLET TYPE Mod GT4 DI (SAND TRAP) (N)	MANHOLE FRAME AND COVER (N)	MODIFY EXISTING RCB	HEIGHT OF INLET OR MH "H" (N)	MINOR CONCRETE (MINOR STRUCTURE)	LADDER (N)	MISCELLANEOUS IRON & STEEL (N)	FRAME & GRATE TYPE 18-9X (N)	FRAME & GRATE TYPE 24-12X (N)	DRAINAGE INLET MARKER	MAXIMUM COVER (N)	DESCRIPTION	STATION	DRAINAGE SYSTEM No.	DRAINAGE PLAN SHEET No.	DRAINAGE UNIT
			EA	LF	EA	EA	EA	LF	LF	LF	LF	CY	EA	EA	EA	LB	EA	LF	CY	EA	LB	EA	EA	EA	LF					
4	D-2	a		8																						REMOVE CULVERT		4	D-2	a
		b				1																				REMOVE DI				b
		c		4																						REMOVE CULVERT				c
		d				1																				REMOVE DI				d
		e		12																						REMOVE CULVERT				e
		f				1																				REMOVE DI				f
		g											1					3.4	1.3	1	239		1	1	N/A	TYPE Mod GO DI	205+85			g
		h										31.0	10.4													18" x 31' RCP				h
		i												1				3.0	1.2	1	239		1	1	N/A	TYPE Mod GO DI	206+10			i
		j		132																						REMOVE CULVERT				j
		k										156.0	52.4													18" x 156' RCP				k
	D-3	l				1																				REMOVE DI			D-3	l
		m		7																						REMOVE CULVERT				m
		n			1																					REMOVE MH				n
		o		140																						REMOVE CULVERT				o
		p											1					2.9	1.2	1	239		1	1	N/A	TYPE Mod GO DI	207+70			p
		q										180.0	60.5													18" x 180' RCP				q
		r		10																						REMOVE CULVERT				r
		s				1																				REMOVE DI				s
		t													1			6.0	3.3	1	478		2	1	N/A	TYPE Mod GT4 DI				t
		u		150																						REMOVE CULVERT				u
		v										150.0	50.4													18" x 150' RCP	209+00			v
		w												1				3.0	1.2	1	239		1	1	N/A	TYPE Mod GO DI				w
		x										5.0	1.7													18" x 5' RCP				x
		y										150.0	50.4													18" x 150' RCP	209+96			y
		z												1				3.0	1.2	1	239		1	1	N/A	TYPE Mod GO DI				z
		ca										5.0	1.7													18" x 5' RCP				ca
		cb													1			6.0	3.3	1	478		2	1	N/A	TYPE Mod GT4 DI	210+98			cb
		cc										175.0	58.8													18" x 175' RCP				cc
	D-4	cd												1				2.6	2.0	1	239		1	1	N/A	TYPE Mod GO DI	212+00		D-4	cd
		ce										180.0	60.5													18" x 180' RCP				ce
		cf													1			6.0	3.3	1	478		2	1	N/A	TYPE Mod GT4 DI	213+75			cf
		cg										125.0	42.0													18" x 125' RCP				cg
SUBTOTAL				463	1	5						1157.0	389.0	6		3		36.0	18.0	9	2868		12	9		SUBTOTAL				

(N) NOT A SEPARATE PAY ITEM, FOR INFORMATION ONLY.

DRAINAGE QUANTITIES

DQ-4

STATE OF CALIFORNIA - DEPARTMENT OF TRANSPORTATION
Caltrans
NORTH REGION
DIVISION OF ENGINEERING
BRANCH M4

FUNCTIONAL SUPERVISOR: TAREK TABSHOURI

CALCULATED-DESIGNED BY: ANAND MAGANTI
CHECKED BY: TAREK TABSHOURI

REVISED BY
DATE REVISED

LAST REVISION 06-15-11
DATE PLOTTED => 14-NOV-2011
TIME PLOTTED => 09:52

Dist	COUNTY	ROUTE	POST MILES TOTAL PROJECT	SHEET No.	TOTAL SHEETS
03	ED	50	78.9/79.5	29	78

M Anand 6-23-11
REGISTERED CIVIL ENGINEER DATE

11-7-11
PLANS APPROVAL DATE

REGISTERED PROFESSIONAL ENGINEER
A. MAGANTI
No. C74128
Exp. 6-30-13
CIVIL
STATE OF CALIFORNIA

THE STATE OF CALIFORNIA OR ITS OFFICERS OR AGENTS SHALL NOT BE RESPONSIBLE FOR THE ACCURACY OR COMPLETENESS OF SCANNED COPIES OF THIS PLAN SHEET.

DRAINAGE ITEMS

	ABANDON CULVERT	REMOVE CULVERT	REMOVE MANHOLE	REMOVE INLET	REMOVE JUNCTION BOX	15" PP	24" RCP	12" WSP	18" RCP	MINOR CONCRETE (BACKFILL)	INLET TYPE (N) Mod GO DI	INLET TYPE (N) Mod GO-ST DI	INLET TYPE (N) Mod GT4 DI (SAND TRAP)	MANHOLE FRAME AND COVER (N)	MODIFY EXISTING RCB	HEIGHT OF INLET OR MH "H" (N)	MINOR CONCRETE (MINOR STRUCTURE)	LADDER (N)	MISCELLANEOUS IRON & STEEL	FRAME & GRATE TYPE 18-9X (N)	FRAME & GRATE TYPE 24-12X (N)	DRAINAGE INLET MARKER	MAXIMUM COVER (N)
	EA	LF	EA	EA	EA	LF	LF	LF	LF	CY	EA	EA	EA	LB	EA	LF	CY	EA	LB	EA	EA	EA	LF
SHEET DQ-1 TOTAL	1	94		2	1	3	67	228	552	271.8	4	1	2	400	1	24.3	11.6	7	2,151	1	8	7	
SHEET DQ-2 TOTAL		351	1	4		3	76		491	200.7	4	1	1	400		20.2	9.6	5	1,434	1	5	5	
SHEET DQ-3 TOTAL	1	998	1	11					1,171	394	8		4			47	23	12	3,824		16	12	
SHEET DQ-4 TOTAL		463	1	5					1,157	389	6		3			36	18	9	2,868		12	9	
GRAND TOTAL	2	1906	3	22	1	6	143	228	3,371	1,256	22	2	10	800	1	127.5	62.2	33	10,277	2	41	33	

(N) NOT A SEPARATE PAY ITEM, FOR INFORMATION ONLY.

DRAINAGE QUANTITIES

DQ-5

STATE OF CALIFORNIA - DEPARTMENT OF TRANSPORTATION
Caltrans
NORTH REGION
DIVISION OF ENGINEERING
BRANCH M4

FUNCTIONAL SUPERVISOR: TAREK TABSHOURI
CALCULATED-DESIGNED BY: ANAND MAGANTI
CHECKED BY: TAREK TABSHOURI
REVISED BY
DATE REVISED

LAST REVISION 06-15-11
DATE PLOTTED => 14-NOV-2011
TIME PLOTTED => 09:52

Dist	COUNTY	ROUTE	POST MILES TOTAL PROJECT	SHEET No.	TOTAL SHEETS
03	ED	50	78.9/79.5	30	78

REGISTERED CIVIL ENGINEER 6-23-11 DATE

11-7-11
PLANS APPROVAL DATE

REGISTERED PROFESSIONAL ENGINEER
R. REAL
No. 72044
Exp. 6-30-12
CIVIL
STATE OF CALIFORNIA

THE STATE OF CALIFORNIA OR ITS OFFICERS OR AGENTS SHALL NOT BE RESPONSIBLE FOR THE ACCURACY OR COMPLETENESS OF SCANNED COPIES OF THIS PLAN SHEET.

NOTES:

1- LOCATION OF THE FACILITIES SHOWN ON THESE PLANS ARE APPROXIMATE AND SHALL BE VERIFIED BY THE CONTRACTOR PRIOR TO CONSTRUCTION.

2- ALL ELEVATIONS SHOWN REFER TO THE TOP OF THE PIPE ELEVATION UNLESS OTHERWISE INDICATED.

3- SEE SPECIAL PROVISION FOR EXCAVATION NEAR UNDERGROUND UTILITIES.

4- UTILITY OWNERSHIP ON THIS PROJECT:

GAS	SOUTHWEST GAS (SWG)
WATER	SOUTH TAHOE PUBLIC UTILITY DISTRICT (STPUD)
ELECTRIC	SIERRA PACIFIC POWER.
TELEPHONE	CHARTER COMMUNICATION.
SEWER	STOUD
CABLE	CHARTER COMMUNICATION.

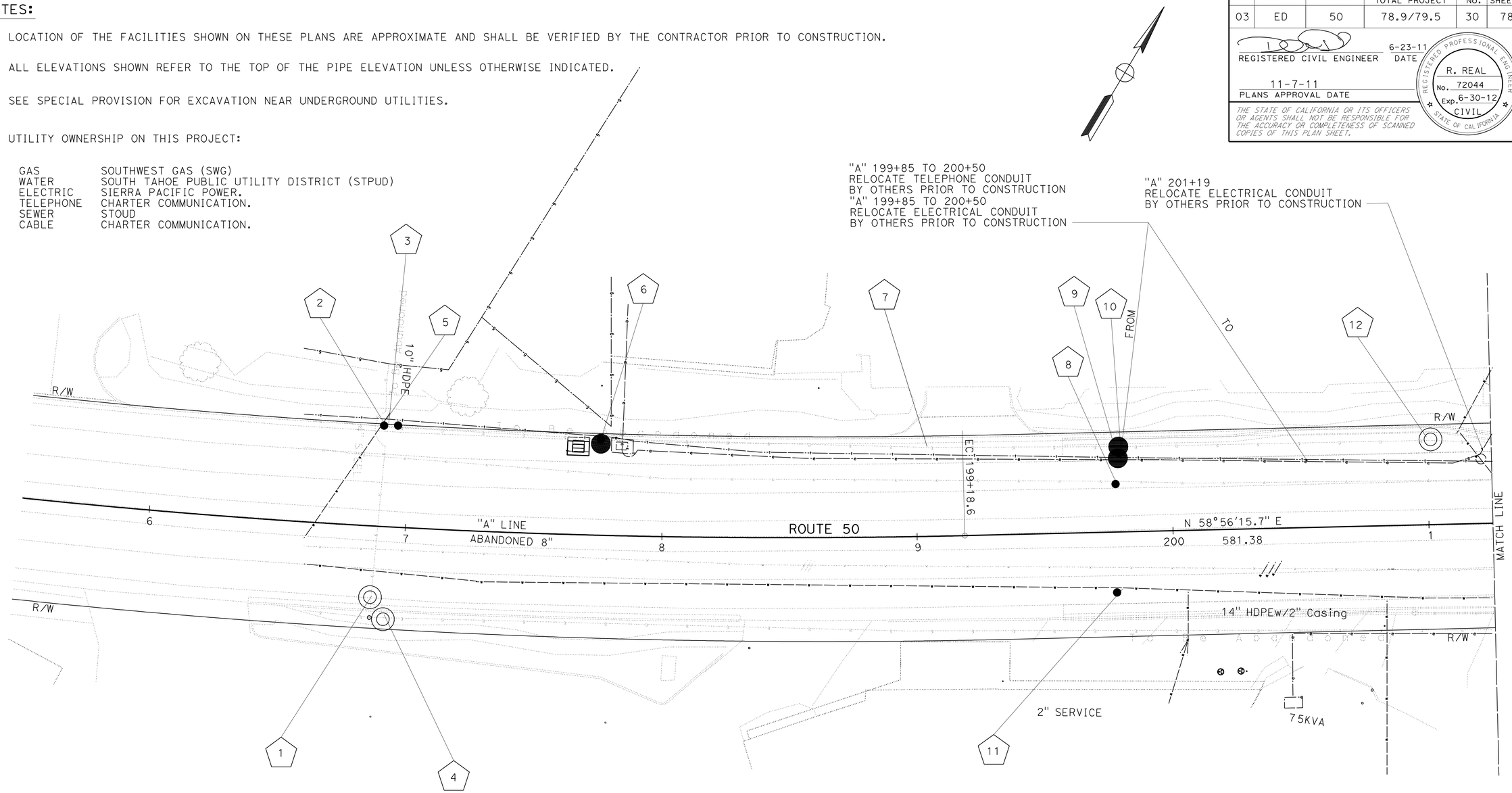

LEGEND

- ELECTRONIC DETECTION (ED)
- POTHOLE (PH)
- PH/ED NUMBER (SEE U-5) POTHOLE LOCATION

APPROVED FOR UTILITY INFORMATION ONLY

UTILITY PLAN

SCALE: 1" = 20'

U-1

STATE OF CALIFORNIA - DEPARTMENT OF TRANSPORTATION
NORTH REGION
DIVISION OF ENGINEERING
BRANCH M4

FUNCTIONAL SUPERVISOR: TAREK TABSHOURI

CALCULATED-DESIGNED BY: REBECCA REAL
CHECKED BY: ANAND MAGANTI

REVISED BY
DATE REVISED

LAST REVISION 06-15-11
DATE PLOTTED => 10-NOV-2011
TIME PLOTTED => 16:56

Dist	COUNTY	ROUTE	POST MILES TOTAL PROJECT	SHEET No.	TOTAL SHEETS
03	ED	50	78.9/79.5	31	78

REGISTERED CIVIL ENGINEER 6-23-11 DATE

11-7-11
PLANS APPROVAL DATE

REGISTERED PROFESSIONAL ENGINEER R. REAL No. 72044 Exp. 6-30-12 CIVIL STATE OF CALIFORNIA

THE STATE OF CALIFORNIA OR ITS OFFICERS OR AGENTS SHALL NOT BE RESPONSIBLE FOR THE ACCURACY OR COMPLETENESS OF SCANNED COPIES OF THIS PLAN SHEET.

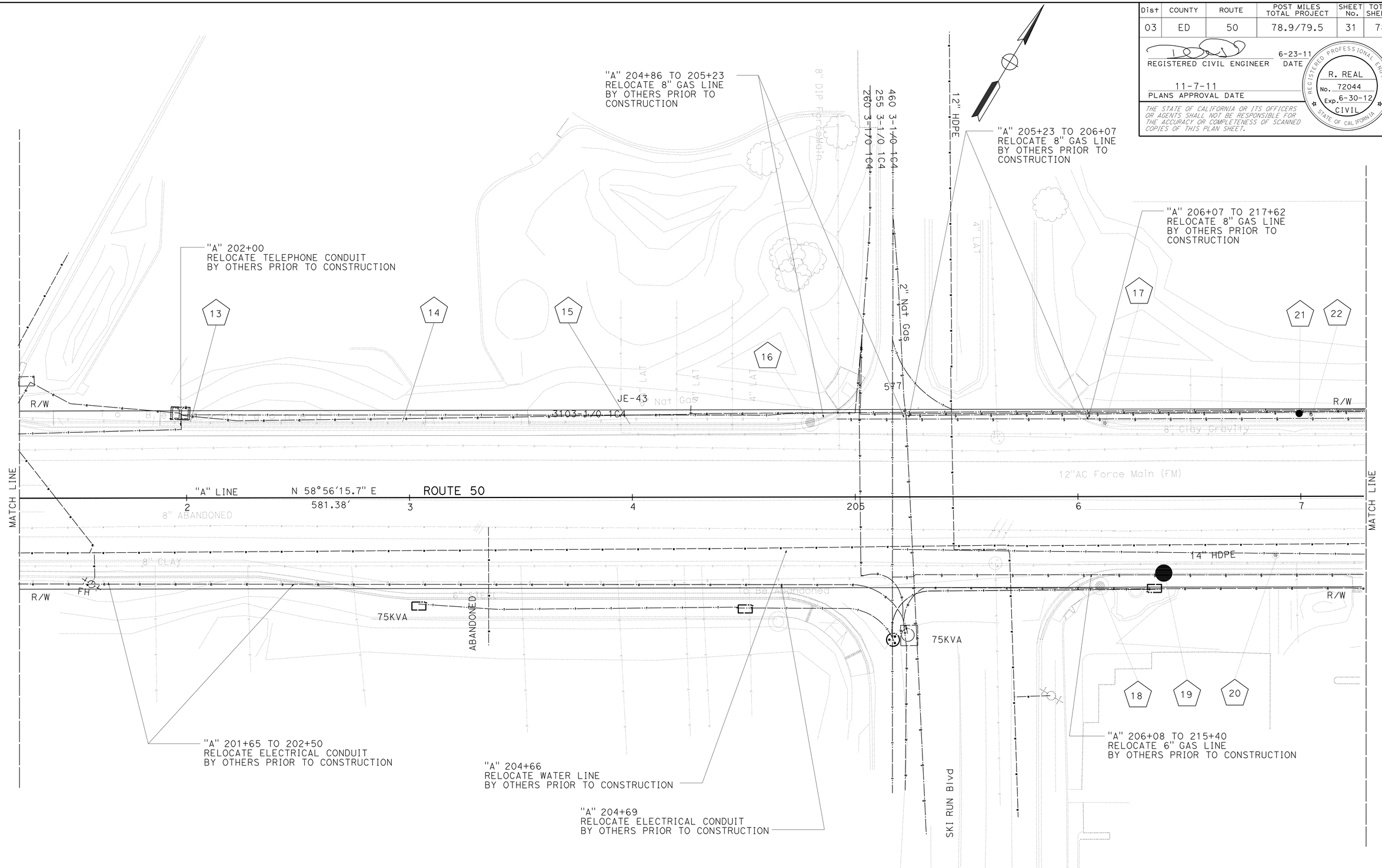

APPROVED FOR UTILITY INFORMATION ONLY

UTILITY PLAN

SCALE: 1" = 20'

U-2

STATE OF CALIFORNIA - DEPARTMENT OF TRANSPORTATION
Caltrans
NORTH REGION
DIVISION OF ENGINEERING
BRANCH M4

FUNCTIONAL SUPERVISOR: TAREK TABSHOURI

CALCULATED-DESIGNED BY: KHALEEL OBAIDI
CHECKED BY: ANAND MAGANTI

REVISED BY
DATE REVISED

LAST REVISION 06-15-11
DATE PLOTTED => 10-NOV-2011
TIME PLOTTED => 16:56

Dist	COUNTY	ROUTE	POST MILES TOTAL PROJECT	SHEET No.	TOTAL SHEETS
03	ED	50	78.9/79.5	32	78

REGISTERED CIVIL ENGINEER 6-23-11 DATE

11-7-11
PLANS APPROVAL DATE

REGISTERED PROFESSIONAL ENGINEER
R. REAL
No. 72044
Exp. 6-30-12
CIVIL
STATE OF CALIFORNIA

THE STATE OF CALIFORNIA OR ITS OFFICERS OR AGENTS SHALL NOT BE RESPONSIBLE FOR THE ACCURACY OR COMPLETENESS OF SCANNED COPIES OF THIS PLAN SHEET.

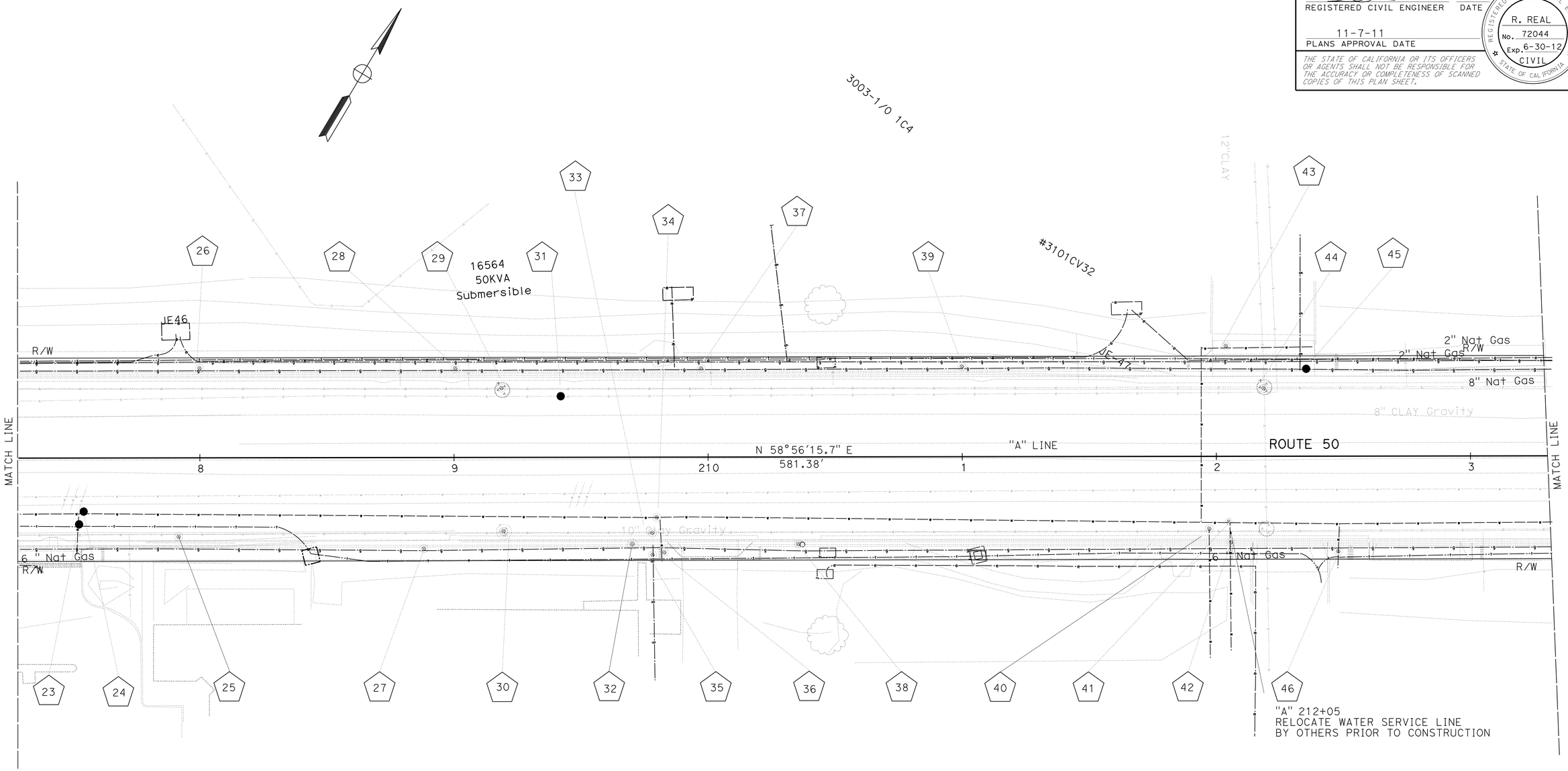

APPROVED FOR UTILITY INFORMATION ONLY

UTILITY PLAN

SCALE: 1" = 20'

U-3

REVISED BY	DATE REVISED
KHALEEL OBAIDI	
CALCULATED-DESIGNED BY	CHECKED BY
ANAND MAGANTI	
FUNCTIONAL SUPERVISOR	
TAREK TABSHOURI	

STATE OF CALIFORNIA - DEPARTMENT OF TRANSPORTATION
NORTH REGION
DIVISION OF ENGINEERING
BRANCH M4
Caltrans

LAST REVISION 06-15-11
DATE PLOTTED => 10-NOV-2011
TIME PLOTTED => 16:56

Dist	COUNTY	ROUTE	POST MILES TOTAL PROJECT	SHEET No.	TOTAL SHEETS
03	ED	50	78.9/79.5	33	78

REGISTERED CIVIL ENGINEER 6-23-11 DATE

11-7-11
PLANS APPROVAL DATE

REGISTERED PROFESSIONAL ENGINEER
R. REAL
No. 72044
Exp. 6-30-12
CIVIL
STATE OF CALIFORNIA

THE STATE OF CALIFORNIA OR ITS OFFICERS OR AGENTS SHALL NOT BE RESPONSIBLE FOR THE ACCURACY OR COMPLETENESS OF SCANNED COPIES OF THIS PLAN SHEET.

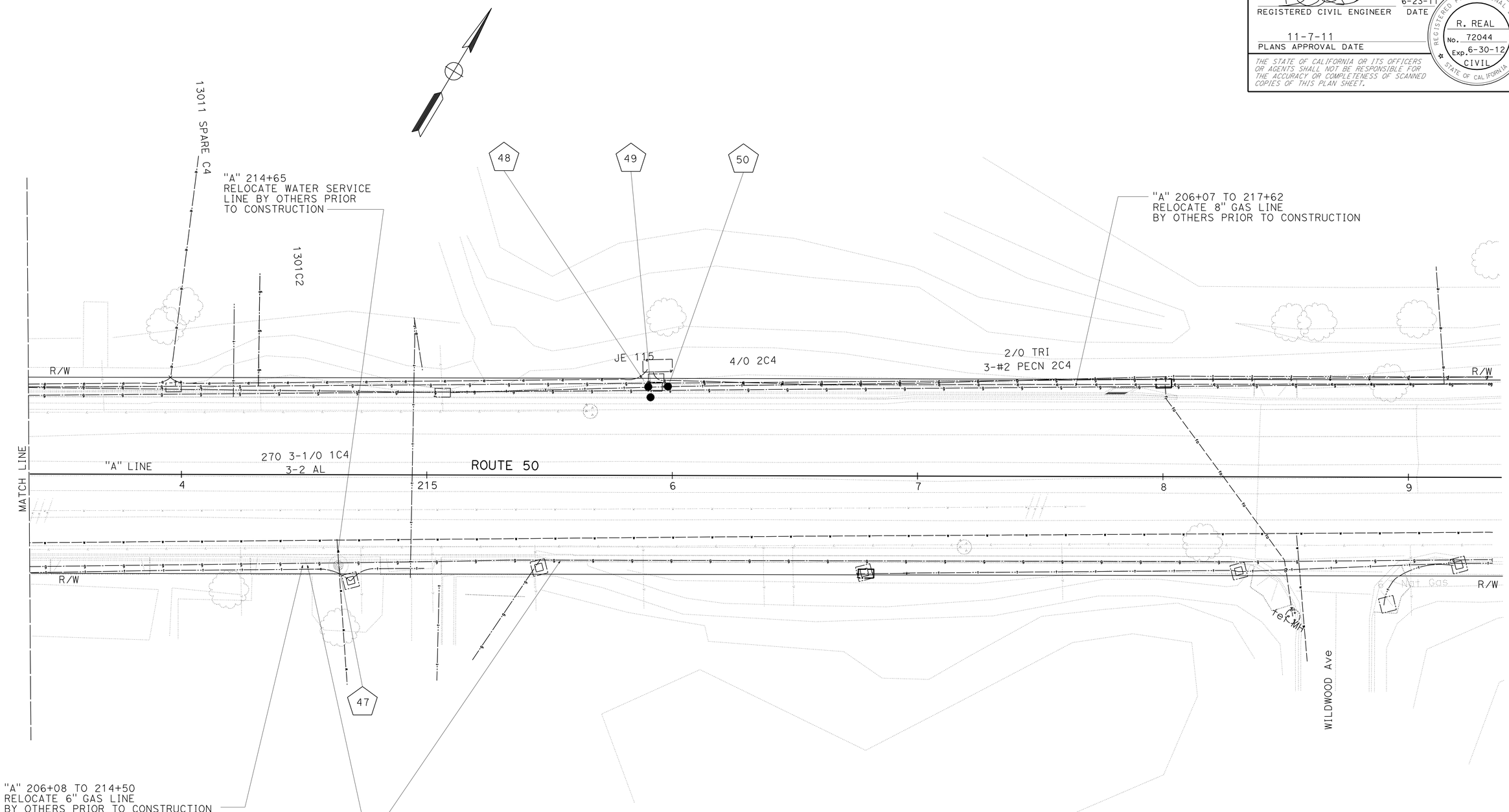

UTILITY PLAN

SCALE: 1" = 20'

U-4

APPROVED FOR UTILITY INFORMATION ONLY

STATE OF CALIFORNIA - DEPARTMENT OF TRANSPORTATION
Caltrans
NORTH REGION
DIVISION OF ENGINEERING
BRANCH M4

FUNCTIONAL SUPERVISOR: TAREK TABSHOURI

CALCULATED-DESIGNED BY: KHALEEL OBAIDI
CHECKED BY: ANAND MAGANTI

REVISED BY
DATE REVISED

LAST REVISION 06-15-11
DATE PLOTTED => 10-NOV-2011
TIME PLOTTED => 16:57

Dist	COUNTY	ROUTE	POST MILES TOTAL PROJECT	SHEET No.	TOTAL SHEETS
03	ED	50	78.9/79.5	34	78

REGISTERED CIVIL ENGINEER 6-23-11 DATE

11-7-11
PLANS APPROVAL DATE

REGISTERED PROFESSIONAL ENGINEER
R. REAL
No. 72044
Exp. 6-30-12
CIVIL
STATE OF CALIFORNIA

THE STATE OF CALIFORNIA OR ITS OFFICERS OR AGENTS SHALL NOT BE RESPONSIBLE FOR THE ACCURACY OR COMPLETENESS OF SCANNED COPIES OF THIS PLAN SHEET.

POTHOLE LOCATION TABLE

X	UTILITY	STATION	TYPE PH/ED	NORTHING	EASTING	ELEVATION	DEPTH (FT)	OFFSET (RT,LT)
1	GAS	196+87.01	14J	N2113335.48	E7141733.30	6232.75	6.33	R29.94
2	GAS	196+88.45	14B	N2113395.02	E7141705.22	6235.36	2.92	L35.88
3	WATER	196+88.74	14B1	N2113396.33	E7141704.89	6232.68	5.58	L37.20
4	GAS	196+92.38	ED50	N2113331.75	E7141741.23	6231.76	6.59	R36.82
5	WATER	196+92.74	14B1	N2113397.62	E7141708.66	6233.18	5.00	L36.66
6	GAS	197+73.06	15F	N2113433.81	E7141779.22	6234.74	3.08	L36.34
7	GAS	199+02.12	EDZ76	N2113496.34	E7141890.26	6233.15	3.83	L36.17
8	SEWER	199+75.75	15D	N2113522.67	E7141960.12	6233.37	4.17	L22.71
9	TEL	199+76.54	15C	N2113531.31	E7141955.95	6233.36	3.58	L32.29
10	GAS	199+77.81	15B	N2113535.34	E7141955.00	6233.99	2.83	L36.23
11	WATER	199+78.09	15A	N2113488.22	E7141983.61	6233.20	4.83	R18.91
12	GAS	200+97.26	EDZ77	N2113599.79	E7142055.52	6233.22	3.50	L39.56
13	GAS	202+02.09	EDZ78	N2113650.00	E7142147.65	6232.76	4.33	L35.03
14	GAS	202+96.35	EDZ79	N2113698.86	E7142229.37	6233.05	4.08	L34.78
15	GAS	203+99.32	EDZ81	N2113750.45	E7142317.40	6234.42	2.33	L33.49
16	GAS	204+79.17	ED	N2113792.63	E7142386.31	6236.00	2.37	LT,24.97
17	GAS	206+18.00	ED	N2113858.98	E7142497.85	6232.27	3.37	LT,33.23
18	POWER	206+10.20	ED	N2113796.09	E7142535.64	6233.44	2.83	RT,41.16
19	GAS	206+41.00	PH	N2113815.82	E7142557.13	6233.23	2.75	RT,34.16
20	TELEPHONE	206.85.20	ED	N2113849.77	E7142596.82	6229.94	6.17	RT,25.43
21	GAS	207+00.00	ED	N2113908.24	E7142574.94	6231.10	4.25	LT,35.50
22	GAS	207+05.00	PH	N2113909.20	E7142576.83	6231.64	4.25	LT,35.50
23	WATER	207+45.00	PH	N2113881.09	E7142650.39	6230.16	5.00	RT,25.95
24	WATER	207+45.45	PH	N2113886.89	E7142649.73	6231.64	4.25	RT,21.09
25	SEWER	207+89.95	ED	N2113888.81	E7142669.34	6228.29	6.00	RT,30.67
26	GAS	208+00.00	ED	N2113957.89	E7142658.83	6229.50	5.25	LT,35.43
27	GAS	208+89.50	ED	N2113943.60	E7142771.00	6231.75	3.25	RT,35.57
28	GAS	209+00.00	ED	N2114008.91	E7142745.78	6230.24	4.08	LT,35.43
29	SEWER	209+29.95	ED	N2114012.93	E7142766.14	6229.53	5.08	LT,27.14
30	SEWER	209+29.95	ED	N2113965.01	E7142793.42	6228.84	6.00	RT,28.05
31	SEWER	209+48.95	PH	N2114022.68	E7142787.36	6228.84	6.00	RT,29.94
32	GAS	209+68.95	ED	N2113986.53	E7142841.73	6231.13	3.15	RT,34.55
33	SEWER	209+79.85	ED	N2113995.88	E7142846.21	6231.03	3.67	RT,29.42
34	WATER	209+79.90	ED	N2114000.88	E7142843.77	6229.77	5.25	RT,23.61
35	WATER	209+79.86	ED	N2113987.07	E7142850.49	6231.88	3.15	RT,38.02
36	WATER	209+80.00	ED	N2113989.07	E7142853.99	6231.37	3.67	RT,38.03
37	GAS	210+00.00	ED	N2114066.32	E7142827.37	6229.91	4.42	LT,34.91
38	GAS	210+37.55	ED	N2114019.70	E7142899.70	6231.96	2.75	RT,35.92
39	GAS	211+00.00	ED	N2114110.50	E7142917.81	6230.62	3.00	LT,32.74
40	WATER	211+96.55	ED	N2114108.41	E7143033.60	6231.95	2.30	RT,29.38
41	WATER	212+07.20	ED	N2114114.99	E7143038.85	6231.95	2.30	RT,26.64

POTHOLE LOCATION TABLE

X	UTILITY	STATION	TYPE PH/ED	NORTHING	EASTING	ELEVATION	DEPTH (FT)	OFFSET (RT,LT)
42	WATER	212+07.20	ED	N2114108.46	E7143043.46	6232.00	2.50	RT,35.04
43	WATER	212+08.10	ED	N2114173.54	E7143001.66	6226.12	8.00	LT,42.64
44	SEWER	212+20.25	ED	N2114167.73	E7143022.56	6226.83	7.33	LT,27.83
45	GAS	212+37.85	PH	N2114182.37	E7143031.57	6230.92	3.00	LT,34.88
46	WATER	212+48.55	ED	N2114126.76	E7143080.75	6230.47	3.83	RT,37.56
47	WATER	214+62.25	ED	N2114240.45	E7143266.26	6231.21	3.25	RT,36.37
48	GAS	216.89.25	PH	N2114413.04	E7143413.59	6231.04	1.66	LT,35.88
49	TELEPHONE	216.89.25	PH	N2114411.17	E7143414.43	6229.86	2.83	LT,33.78
50	POWER	216.89.25	PH	N2114413.99	E7143413.16		4.50	LT,36.71

UTILITY PLAN
U-5

STATE OF CALIFORNIA - DEPARTMENT OF TRANSPORTATION
Caltrans
NORTH REGION
DIVISION OF ENGINEERING
BRANCH M4

FUNCTIONAL SUPERVISOR: TAREK TABSHOURI
CALCULATED-DESIGNED BY: KHALEEL OBAIDI
CHECKED BY: ANAND MAGANTI
REVISED BY
DATE REVISED

LAST REVISION 06-15-11
DATE PLOTTED => 10-NOV-2011
TIME PLOTTED => 16:57

Dist	COUNTY	ROUTE	POST MILES TOTAL PROJECT	SHEET No.	TOTAL SHEETS
03	ED	50	78.9/79.5	35	78

REGISTERED CIVIL ENGINEER 6-23-11 DATE

11-7-11
PLANS APPROVAL DATE

REGISTERED PROFESSIONAL ENGINEER MOHAMMAD RAYYAN No. 60591 Exp. 12-31-12 CIVIL STATE OF CALIFORNIA

THE STATE OF CALIFORNIA OR ITS OFFICERS OR AGENTS SHALL NOT BE RESPONSIBLE FOR THE ACCURACY OR COMPLETENESS OF SCANNED COPIES OF THIS PLAN SHEET.

LEGEND

(XX) CONSTRUCTION AREA SIGN LETTER

SIGN - SINGLE POST

NOTE

SIGN LOCATIONS SHOWN ARE APPROXIMATE.
EXACT LOCATIONS TO BE DETERMINED BY THE ENGINEER.

STATIONARY MOUNTED CONSTRUCTION AREA SIGNS

SIGN LETTER	SIGN CODE		PANEL SIZE	SIGN MESSAGE	NUMBER OF POST AND SIZE	NUMBER OF SIGNS
	FEDERAL	CALIFORNIA				
A	W20-1	C23	48" x 48"	ROAD WORK AHEAD	1-6" x 6"	5
B	G20-2	C14	36" x 18"	END ROAD WORK	1-4" x 4"	5

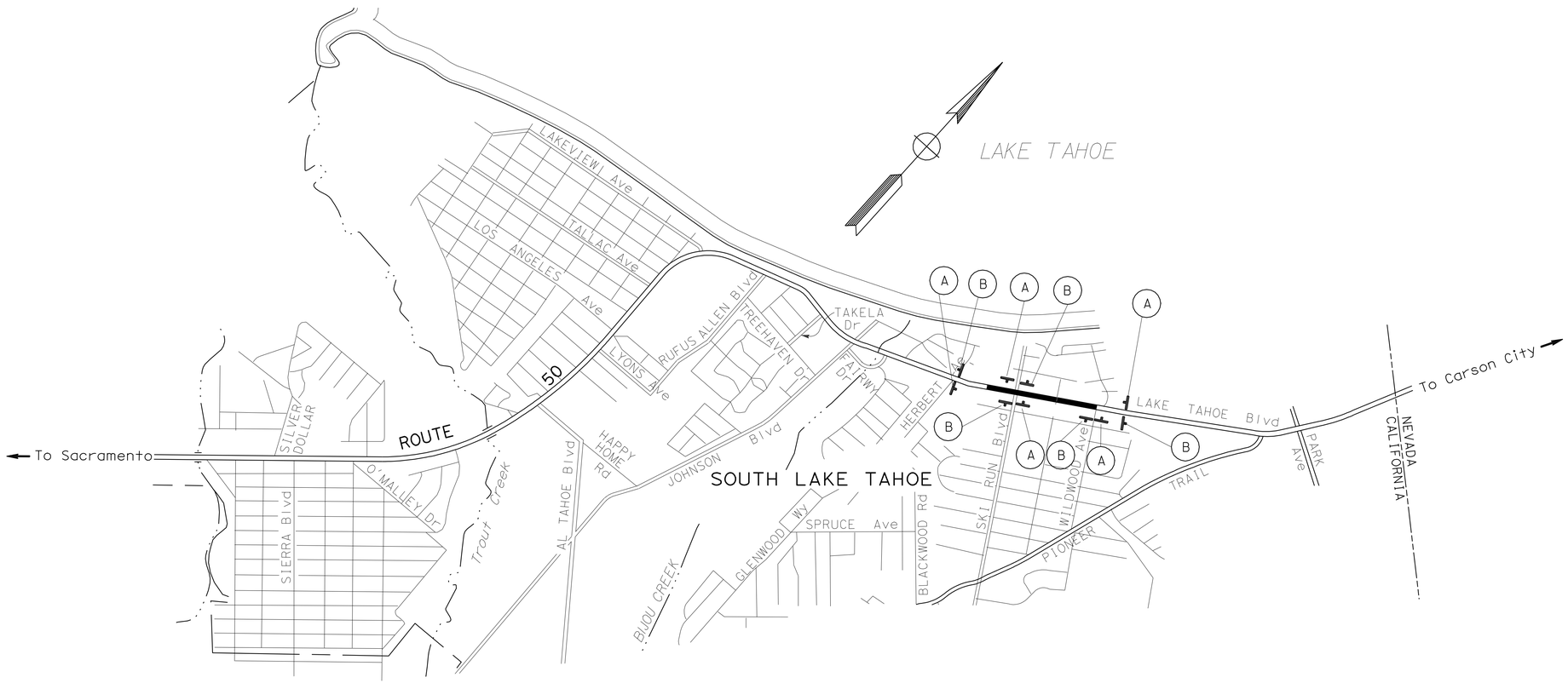

APPROVED FOR CONSTRUCTION AREA SIGN WORK ONLY

CONSTRUCTION AREA SIGNS

NO SCALE

CS-1

STATE OF CALIFORNIA - DEPARTMENT OF TRANSPORTATION
Caltrans
TRAFFIC DESIGN BRANCH
SACRAMENTO

FUNCTIONAL SUPERVISOR: ERIC WONG

CALCULATED-DESIGNED BY
CHECKED BY

REVISED BY | DATE REVISED

LAST REVISION 06-22-11 | DATE PLOTTED => 10-NOV-2011 | TIME PLOTTED => 16:57

Dist	COUNTY	ROUTE	POST MILES TOTAL PROJECT	SHEET No.	TOTAL SHEETS
03	ED	50	78.9/79.5	36	78

Tarek Tabshouri 6-23-11
REGISTERED CIVIL ENGINEER DATE

11-7-11
PLANS APPROVAL DATE

REGISTERED PROFESSIONAL ENGINEER TAREK TABSHOURI No. C 65423 Exp. 9-30-11 CIVIL STATE OF CALIFORNIA

THE STATE OF CALIFORNIA OR ITS OFFICERS OR AGENTS SHALL NOT BE RESPONSIBLE FOR THE ACCURACY OR COMPLETENESS OF SCANNED COPIES OF THIS PLAN SHEET.

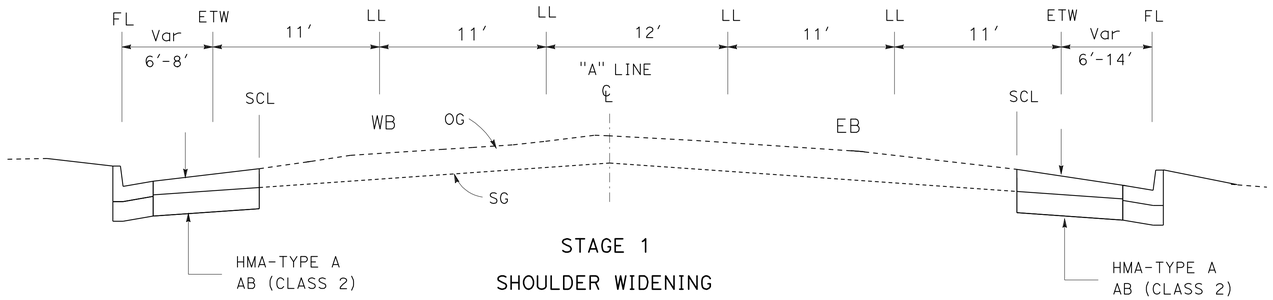

STAGE 1

SHOULDER WIDENING

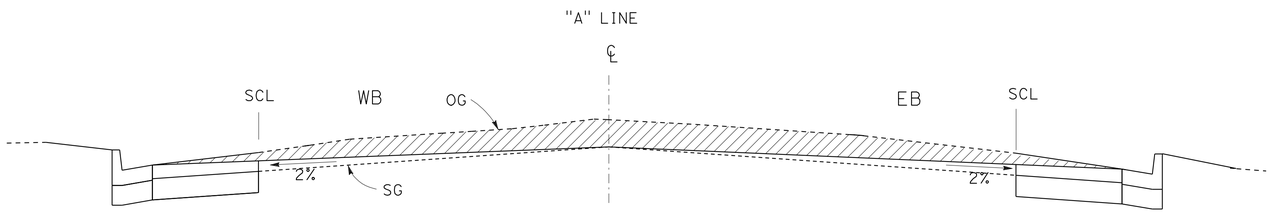

STAGE 2

COLD PLANE AC PAVEMENT TO 2% TO DRAIN, MATCH GUTTER

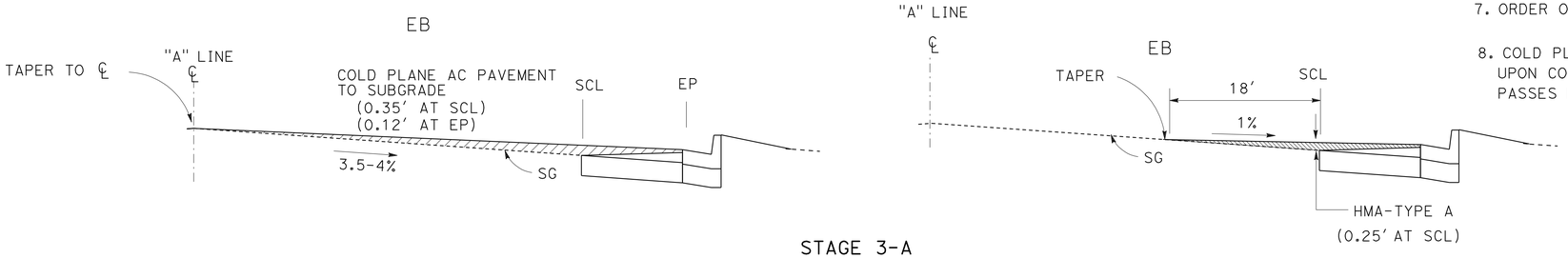

STAGE 3-A

COLD PLANE AC PAVEMENT TO SUBGRADE
ON EB AND PAVE FIRST LIFT HMA -TYPE A

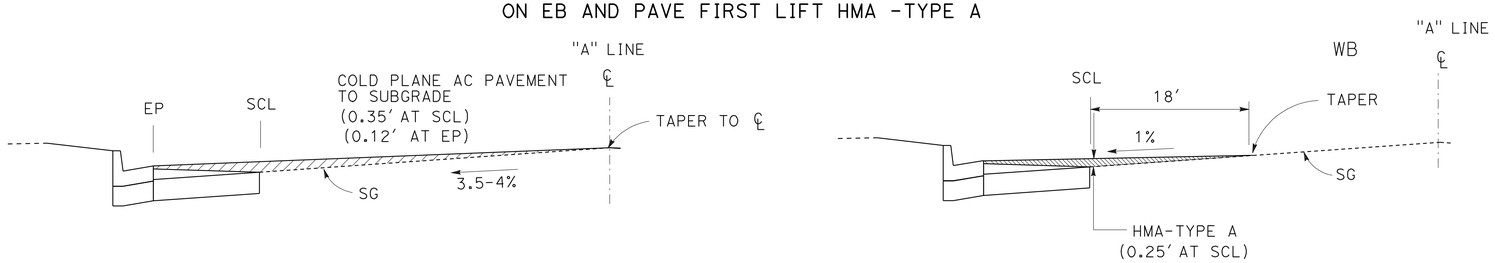

STAGE 3-B

COLD PLANE AC PAVEMENT TO SUBGRADE
ON WB AND PAVE FIRST LIFT HMA -TYPE A

LEGEND

COLD PLANE AC PAVEMENT

HMA - TYPE A
SCL - SAWCUT LINE

NOTES:

1. COLD PLANING AND PAVING TO OCCUR AFTER SHOULDER WIDENING IS COMPLETED.
2. ALL LANES AND SHOULDERS TO BE STRIPED, MARKED AND REOPENED DAILY AFTER EACH WORK SHIFT DURING COLD PLANING AND PAVING OPERATIONS.
3. STRIPING AND PAVEMENT MARKINGS LOCATIONS AND DETAILS SAME AS SHOWN ON PD SHEETS AND STD PLANS.
4. MAINTAIN DRAINAGE.
5. COLD PLANING TO OCCUR IN MULTIPLE ALTERNATING LIFTS ACROSS EB AND WB DURING STAGE 2.
6. COLD PLANING AND PAVING OPERATIONS TO OCCUR IN THE SAME WORK SHIFT FOR STAGES 3 AND 5.
7. ORDER OF WORK (EB OR WB) MAY BE REVERSED FOR STAGES 3, 4, AND 5.
8. COLD PLANE ASPHALT CONCRETE IS MEASURED BY THE SQUARE YARD ONE TIME UPON COMPLETION, AS SHOWN ON THE PLANS, REGARDLESS OF THE NUMBER OF PASSES REQUIRED OR STAGES CONSTRUCTED.

STAGE CONSTRUCTION

NO SCALE

SC-1

REVISED BY | DATE REVISED
KHALEEL OBAIDI | ANAND MAGANTI
CALCULATED-DESIGNED BY | CHECKED BY
FUNCTIONAL SUPERVISOR
TAREK TABSHOURI

STATE OF CALIFORNIA - DEPARTMENT OF TRANSPORTATION
Caltrans
NORTH REGION
DIVISION OF ENGINEERING
BRANCH M4

LAST REVISION 06-15-11 | DATE PLOTTED => 10-NOV-2011 | TIME PLOTTED => 16:57

Dist	COUNTY	ROUTE	POST MILES TOTAL PROJECT	SHEET No.	TOTAL SHEETS
03	ED	50	78.9/79.5	37	78

Tarek Tabshouri 6-23-11
REGISTERED CIVIL ENGINEER DATE

11-7-11
PLANS APPROVAL DATE

REGISTERED PROFESSIONAL ENGINEER
TAREK TABSHOURI
No. C 65423
Exp. 9-30-11
CIVIL
STATE OF CALIFORNIA

THE STATE OF CALIFORNIA OR ITS OFFICERS OR AGENTS SHALL NOT BE RESPONSIBLE FOR THE ACCURACY OR COMPLETENESS OF SCANNED COPIES OF THIS PLAN SHEET.

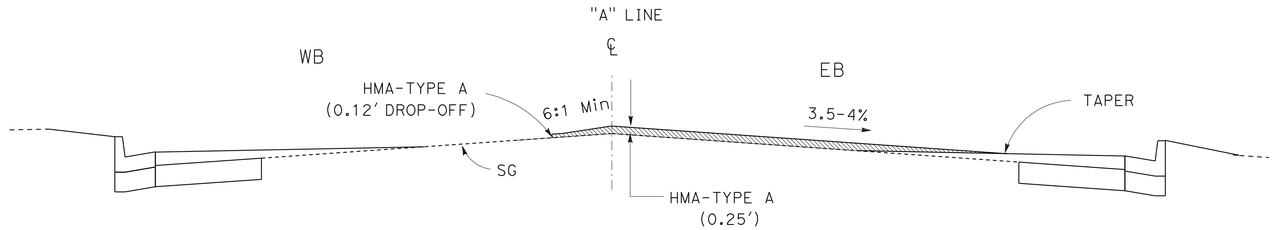

STAGE 4-A

PAVE EB SECOND LIFT HMA -TYPE A

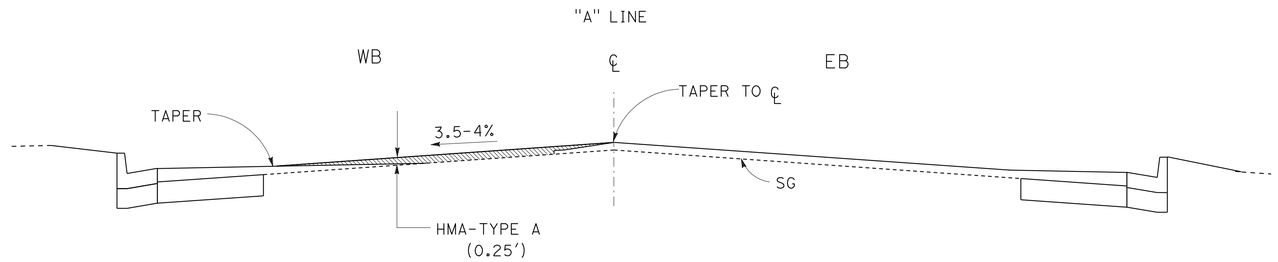

STAGE 4-B

PAVE WB SECOND LIFT HMA -TYPE A

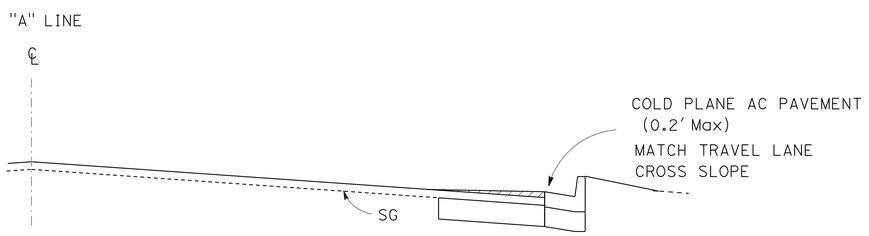

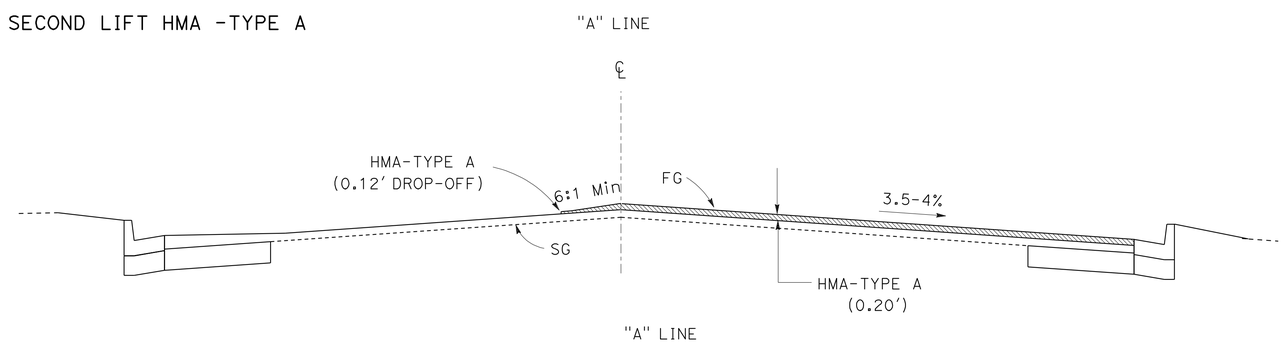

STAGE 5-A

COLD PLANE AC PAVEMENT ON EB SHOULDER
AND PAVE FINAL LIFT HMA -TYPE A

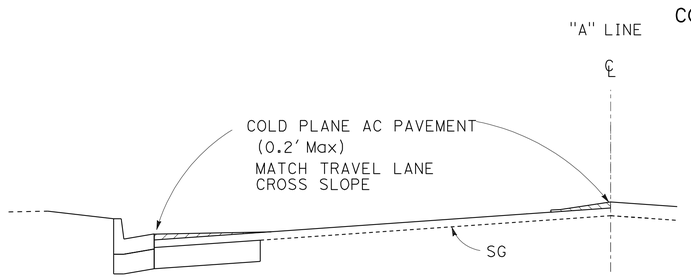

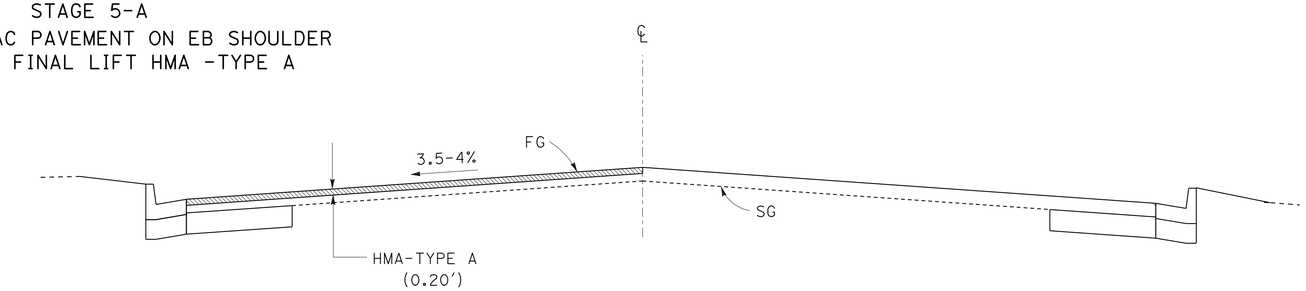

STAGE 5-B

COLD PLANE AC PAVEMENT ON WB SHOULDER
AND PAVE FINAL LIFT HMA -TYPE A

STAGE CONSTRUCTION

NO SCALE

SC-2

STATE OF CALIFORNIA - DEPARTMENT OF TRANSPORTATION
Caltrans
NORTH REGION
DIVISION OF ENGINEERING
BRANCH M4

FUNCTIONAL SUPERVISOR: TAREK TABSHOURI

CALCULATED-DESIGNED BY: KHALEEL OBAIDI
CHECKED BY: ANAND MAGANTI

REVISED BY
DATE REVISED

LAST REVISION 06-15-11
DATE PLOTTED => 10-NOV-2011
TIME PLOTTED => 16:57

Dist	COUNTY	ROUTE	POST MILES TOTAL PROJECT	SHEET No.	TOTAL SHEETS
03	ED	50	78.9/79.5	38	78

REGISTERED CIVIL ENGINEER 6-23-11 DATE

11-7-11
PLANS APPROVAL DATE

REGISTERED PROFESSIONAL ENGINEER MOHAMMAD RAYYAN No. 60591 Exp. 12-31-12 CIVIL STATE OF CALIFORNIA

THE STATE OF CALIFORNIA OR ITS OFFICERS OR AGENTS SHALL NOT BE RESPONSIBLE FOR THE ACCURACY OR COMPLETENESS OF SCANNED COPIES OF THIS PLAN SHEET.

LEGEND:

- Limit of Striping Pattern
- Change In Striping Pattern
- No. / R — Pavement Delineation Detail Number, R=Recessed Traffic Stripe
- LL / R — Limit Line, R=Recessed
- XW / R — CROSSWALK, R=Recessed
- Type I (24′) Arrow
- Type II(B) Arrow
- Type III Arrow
- Bike Lane Arrow
- o "ONLY" Pavement Marking
- S "STOP" Pavement Marking
- B "BIKE" Pavement Marking
- L "LANE" Pavement Marking
- Sht-No. — Roadside Sign Number
- <CA> — California Sign Code
- Sign - Single Post
- Sign - SSBM
- Remove Roadside Sign Panel

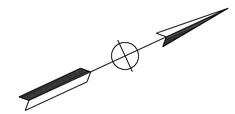

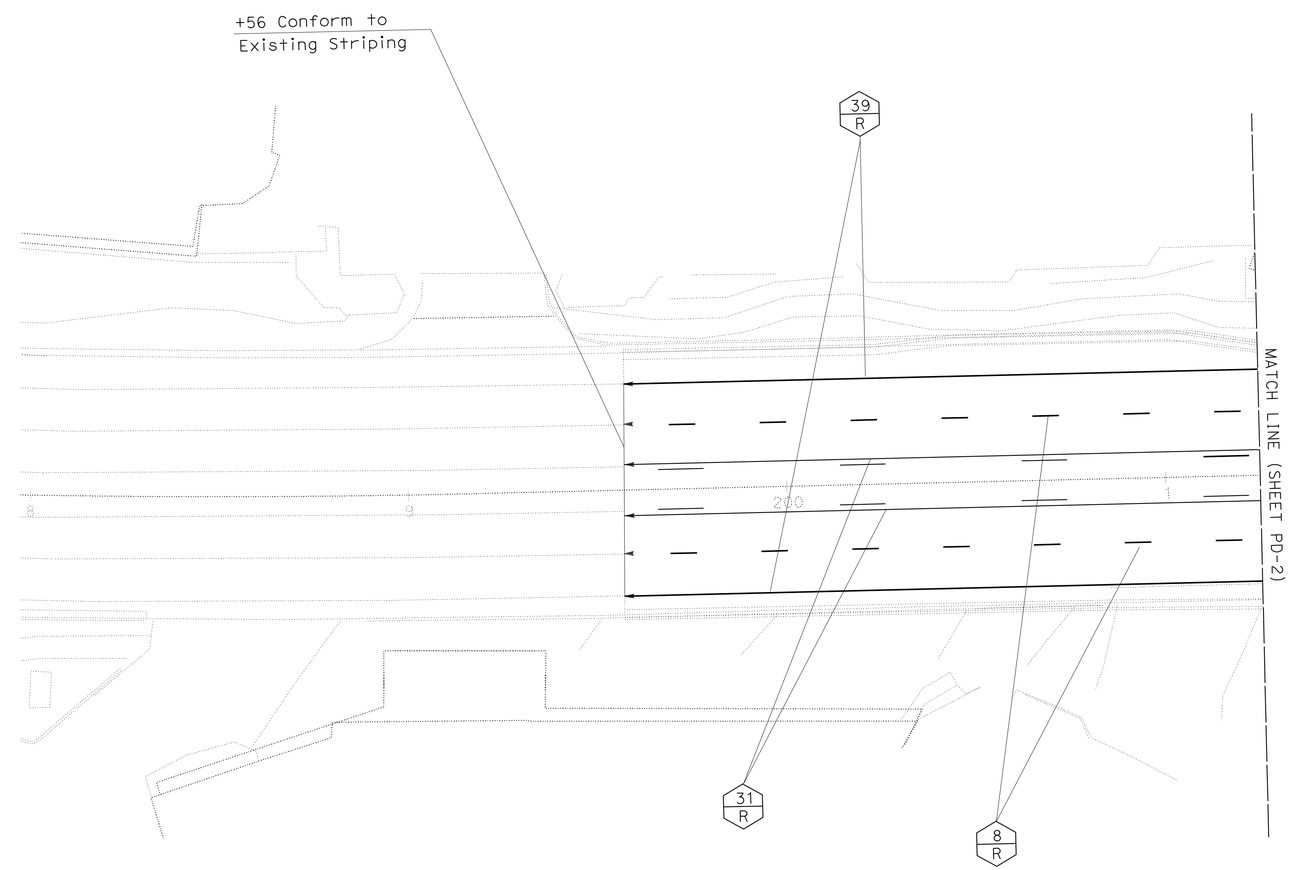

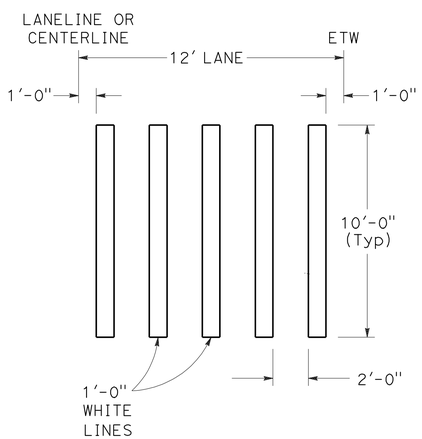

INTERNATIONAL CROSSWALK DETAIL

NO SCALE

NOTE:

1. ALL TRAVEL LANES SHALL BE 11′ WIDE UNLESS OTHERWISE SHOWN. TWO-WAY LEFT TURN LANE SHALL BE 12′ WIDE.

APPROVED FOR PAVEMENT DELINEATION WORK ONLY

PAVEMENT DELINEATION AND SIGN PLAN

SCALE: 1′ = 20″

PD-1

STATE OF CALIFORNIA - DEPARTMENT OF TRANSPORTATION
Caltrans® TRAFFIC DESIGN BRANCH SACRAMENTO

FUNCTIONAL SUPERVISOR: ERIC WONG
CALCULATED-DESIGNED BY: M. RAYYAN
CHECKED BY
REVISED BY
DATE REVISED

LAST REVISION 06-22-11
DATE PLOTTED => 10-NOV-2011
TIME PLOTTED => 16:57

Dist	COUNTY	ROUTE	POST MILES TOTAL PROJECT	SHEET No.	TOTAL SHEETS
03	ED	50	78.9/79.5	39	78

REGISTERED CIVIL ENGINEER 6-23-11 DATE

11-7-11
PLANS APPROVAL DATE

REGISTERED PROFESSIONAL ENGINEER
MOHAMMAD RAYYAN
No. 60591
Exp. 12-31-12
CIVIL
STATE OF CALIFORNIA

THE STATE OF CALIFORNIA OR ITS OFFICERS OR AGENTS SHALL NOT BE RESPONSIBLE FOR THE ACCURACY OR COMPLETENESS OF SCANNED COPIES OF THIS PLAN SHEET.

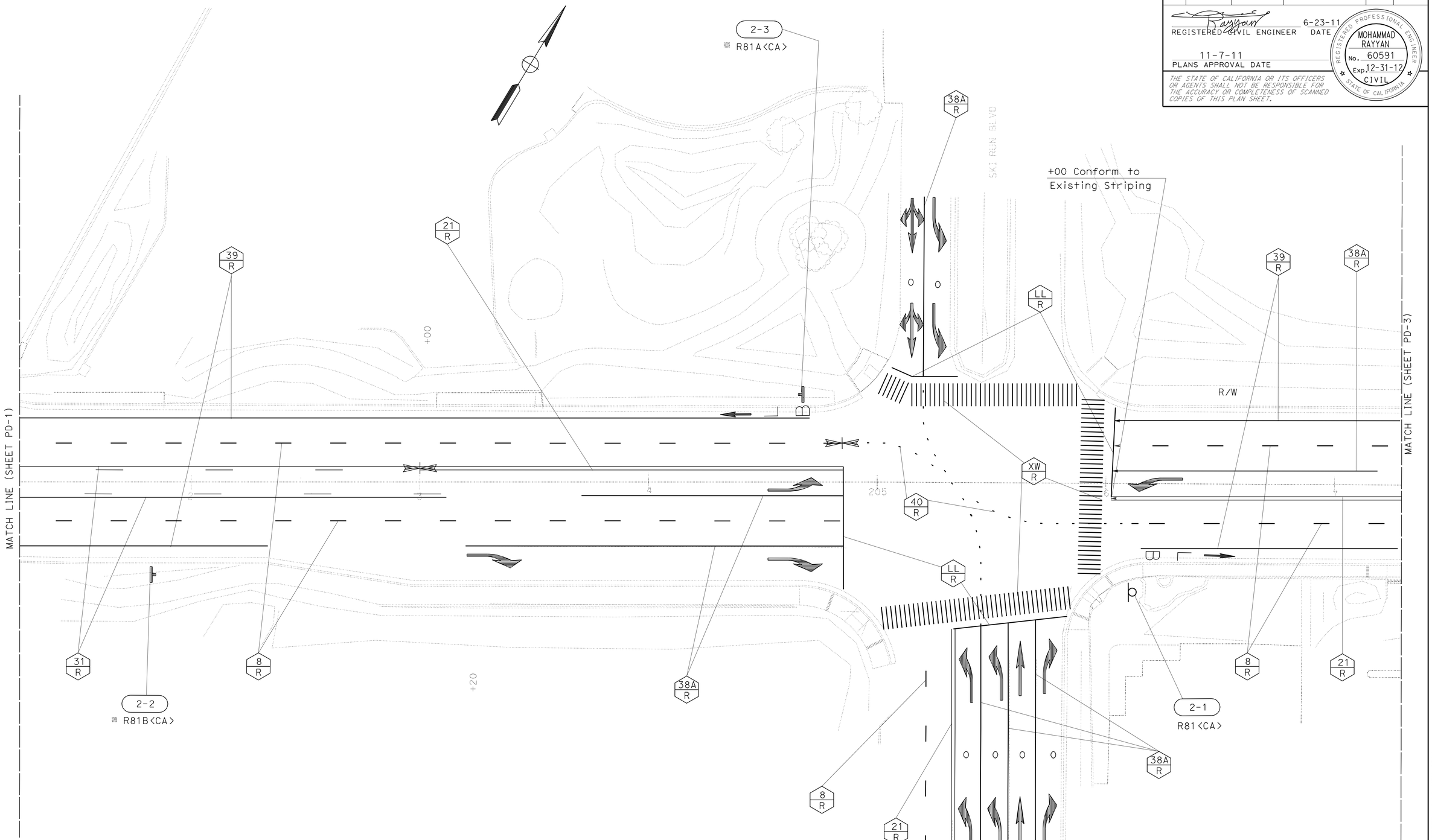

PAVEMENT DELINEATION AND SIGN PLAN

SCALE: 1′ = 20″

PD-2

APPROVED FOR PAVEMENT DELINEATION WORK ONLY

STATE OF CALIFORNIA - DEPARTMENT OF TRANSPORTATION
Caltrans
TRAFFIC DESIGN BRANCH SACRAMENTO

FUNCTIONAL SUPERVISOR: ERIC WONG

CALCULATED-DESIGNED BY: M. RAYYAN
CHECKED BY

REVISED BY
DATE REVISED

LAST REVISION 06-22-11
DATE PLOTTED => 10-NOV-2011
TIME PLOTTED => 16:57

BORDER LAST REVISED 7/2/2010
USERNAME => s113946
DGN FILE => 0300000216na002.dgn
RELATIVE BORDER SCALE IS IN INCHES 0 1 2 3
UNIT 03380
PROJECT NUMBER & PHASE 03000002161

Dist	COUNTY	ROUTE	POST MILES TOTAL PROJECT	SHEET No.	TOTAL SHEETS
03	ED	50	78.9/79.5	40	78

REGISTERED CIVIL ENGINEER 6-23-11 DATE

11-7-11
PLANS APPROVAL DATE

REGISTERED PROFESSIONAL ENGINEER
MOHAMMAD RAYYAN
No. 60591
Exp. 12-31-12
CIVIL
STATE OF CALIFORNIA

THE STATE OF CALIFORNIA OR ITS OFFICERS OR AGENTS SHALL NOT BE RESPONSIBLE FOR THE ACCURACY OR COMPLETENESS OF SCANNED COPIES OF THIS PLAN SHEET.

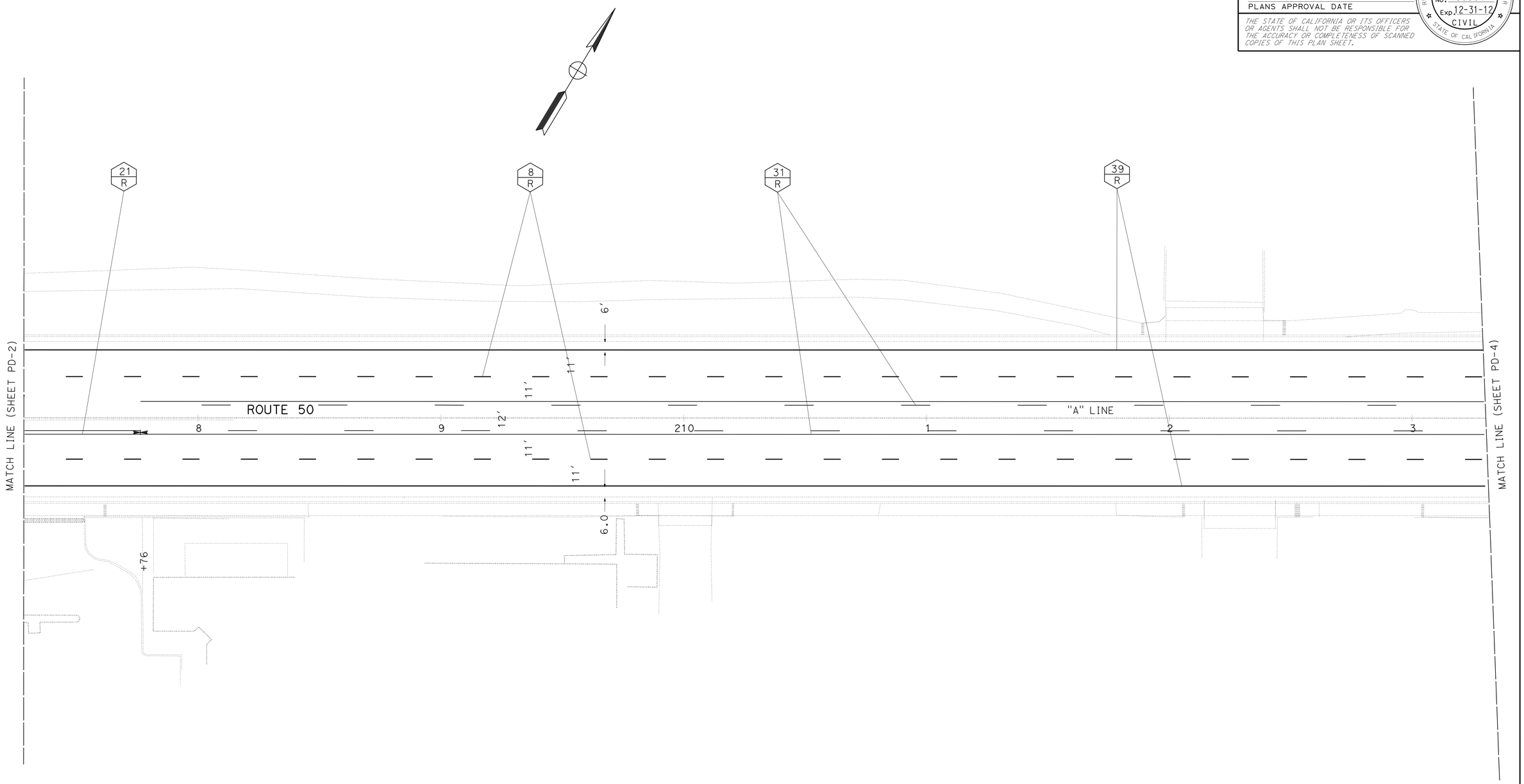

PAVEMENT DELINEATION AND SIGN PLAN

SCALE: 1' = 20"

APPROVED FOR PAVEMENT DELINEATION WORK ONLY

PD-3

REVISED BY | DATE REVISED

M. RAYYAN

CALCULATED-DESIGNED BY | CHECKED BY

FUNCTIONAL SUPERVISOR

ERIC WONG

STATE OF CALIFORNIA - DEPARTMENT OF TRANSPORTATION

Caltrans

TRAFFIC DESIGN BRANCH SACRAMENTO

LAST REVISION 06-22-11

DATE PLOTTED => 10-NOV-2011
TIME PLOTTED => 16:57

Dist	COUNTY	ROUTE	POST MILES TOTAL PROJECT	SHEET No.	TOTAL SHEETS
03	ED	50	78.9/79.5	41	78

REGISTERED CIVIL ENGINEER 6-23-11 DATE

11-7-11
PLANS APPROVAL DATE

REGISTERED PROFESSIONAL ENGINEER
MOHAMMAD RAYYAN
No. 60591
Exp. 12-31-12
CIVIL
STATE OF CALIFORNIA

THE STATE OF CALIFORNIA OR ITS OFFICERS OR AGENTS SHALL NOT BE RESPONSIBLE FOR THE ACCURACY OR COMPLETENESS OF SCANNED COPIES OF THIS PLAN SHEET.

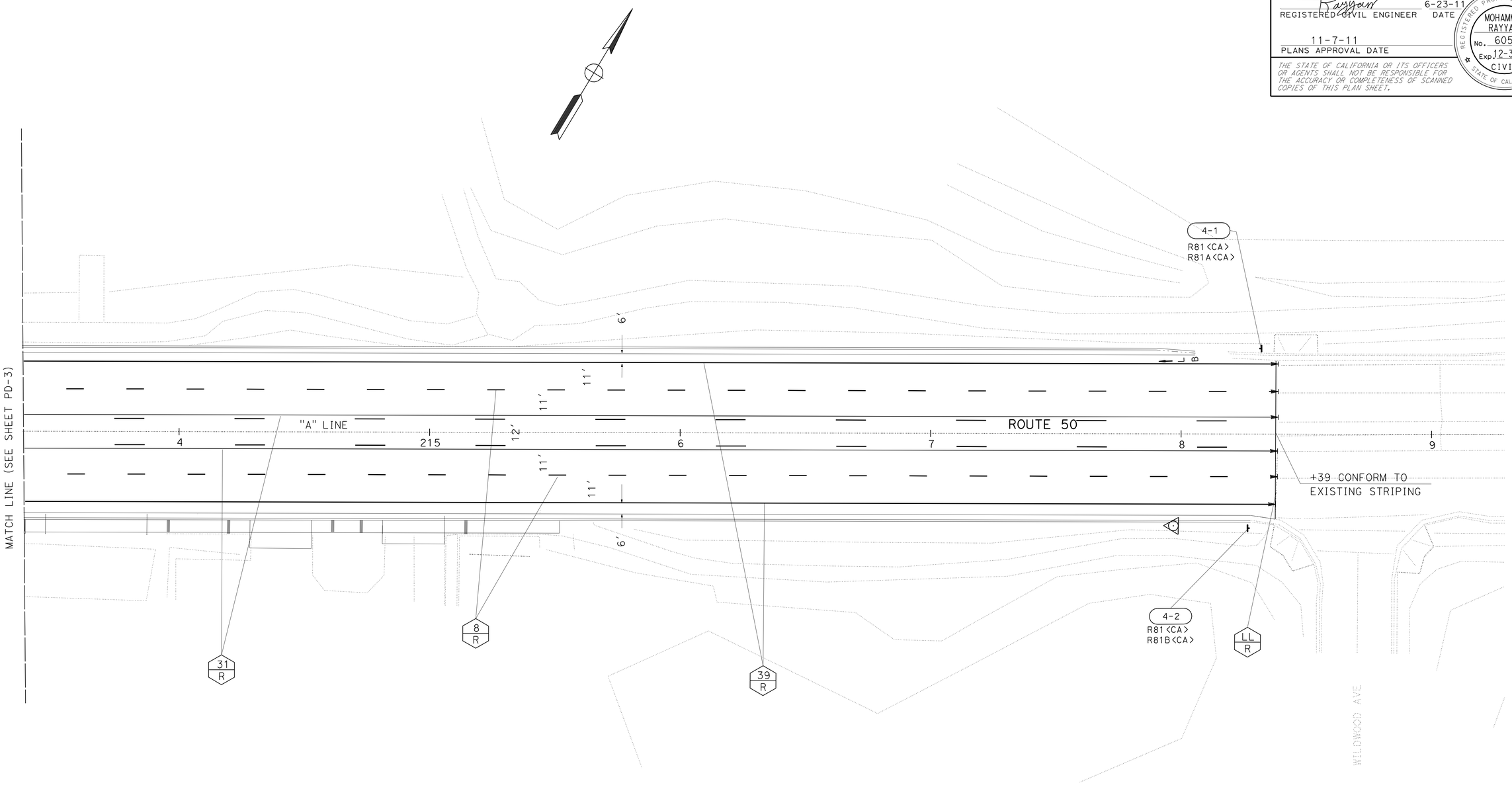

PAVEMENT DELINEATION AND SIGN PLAN

SCALE: 1' = 20"

PD-4

APPROVED FOR PAVEMENT DELINEATION WORK ONLY

REVISED BY | DATE REVISED
M. RAYYAN
CALCULATED-DESIGNED BY
CHECKED BY
FUNCTIONAL SUPERVISOR
ERIC WONG

STATE OF CALIFORNIA - DEPARTMENT OF TRANSPORTATION
Caltrans
TRAFFIC DESIGN BRANCH SACRAMENTO

LAST REVISION 06-22-11
DATE PLOTTED => 10-NOV-2011
TIME PLOTTED => 16:57

Dist	COUNTY	ROUTE	POST MILES TOTAL PROJECT	SHEET No.	TOTAL SHEETS
03	ED	50	78.9/79.5	42	78

REGISTERED CIVIL ENGINEER 6-23-11 DATE

11-7-11
PLANS APPROVAL DATE

REGISTERED PROFESSIONAL ENGINEER MOHAMMAD RAYYAN No. 60591 Exp. 12-31-12 CIVIL STATE OF CALIFORNIA

THE STATE OF CALIFORNIA OR ITS OFFICERS OR AGENTS SHALL NOT BE RESPONSIBLE FOR THE ACCURACY OR COMPLETENESS OF SCANNED COPIES OF THIS PLAN SHEET.

THERMOPLASTIC PAVEMENT MARKING (RECESSED)

DESCRIPTION	NUMBER	AREA (SQFT)
LIMIT LINE	1	197
INTERNATIONAL CROSSWALK	1	1320
TOTAL		1517

TWO-COMPONENT PAINT PAVEMENT MARKING

DESCRIPTION	NUMBER	AREA (SQFT)
TYPE II (B) ARROW	2 @ 59 SQFT	118
TYPE III ARROW	14 @ 42 SQFT	588
TYPE I ARROW(24')	2 @ 31 SQFT	62
ONLY	4 @ 22 SQFT	88
BIKE	3 @ 5 SQFT	15
LANE	3 @ 6 SQFT	18
BIKE LANE ARROW	3 @ 7 SQFT	21
TOTAL		910

8" THERMOPLASTIC TRAFFIC STRIPE (RECESSED)

DETAIL	LF
38A	796
TOTAL	796

4" THERMOPLASTIC TRAFFIC STRIPE (RECESSED)

DETAIL	LF
8	3257
21	929
31	7838
40	275
TOTAL	12299

6" THERMOPLASTIC TRAFFIC STRIPE (RECESSED)

DETAIL	LF
39	3231
TOTAL	3231

ROADSIDE SIGN QUANTITIES

SIGN NUMBER (SHT-No.)	SIGN CODE FEDERAL	SIGN CODE CALIFORNIA	PANEL SIZE (INCHES)	"C" DIM IN FEET	POST SIZE AND LENGTH 4" X 4"	POST SIZE AND LENGTH 4" X 6"	ROADSIDE SIGN ONE POST (EACH)	INSTALL SIGN (SSBM) (EACH)	REMOVE ROADSIDE SIGN PANEL (EACH)	REMARKS
2-1		R81	24 X 18	7				1		
2-2		R81B							1	R81<CA> TO REMAIN
2-3		R81A							1	R81<CA> TO REMAIN
4-1		R81 R81A	24 X 18 8 X 5	7	14'		1			
4-2		R81 R81B	24 X 18 12 X 5	7	14'		1			
						TOTAL	2	1	2	

ROADSIDE SIGN PANEL QUANTITIES (CONTRACTOR-FURNISHED)

SIGN CODE	SIGN MESSAGE/DESCRIPTION	SIGN SIZE L X D (INCHES)	SIGN AREA (SQFT)	NUMBER OF SIGNS	BACKGROUND SHEETING COLOR	BACKGROUND RETROREFLECTIVE ASTM TYPE	LEGEND SHEETING COLOR	LEGEND RETROREFLECTIVE ASTM TYPE	PROTECTIVE OVERLAY PREMIUM	FURNISH SINGLE SHEET ALUMINUM SIGN UNFRAMED 0.063" SQFT
R81<CA>	BIKE LANE	24 X 18	3.00	4	WHITE	III	BLACK		X	12
R81A<CA>	BEGIN	12 X 5	0.42	1	WHITE	III	BLACK		X	0.42
R81B<CA>	END	8 X 5	0.28	1	WHITE	III	BLACK		X	0.28
									TOTAL	12.70

L = LENGTH OF SIGN
D = DEPTH OF SIGN

NOTE

1. CALIFORNIA SIGN CODES ARE DESIGNATED BY <CA>.

PAVEMENT DELINEATION AND SIGN QUANTITIES

PDQ-1

REVISED BY | DATE REVISED
M. RAYYAN | CALCULATED-DESIGNED BY | CHECKED BY
FUNCTIONAL SUPERVISOR: ERIC WONG

STATE OF CALIFORNIA - DEPARTMENT OF TRANSPORTATION
Caltrans
TRAFFIC DESIGN BRANCH SACRAMENTO

LAST REVISION 06-22-11 | DATE PLOTTED => 10-NOV-2011 | TIME PLOTTED => 16:57

Dist	COUNTY	ROUTE	POST MILES TOTAL PROJECT	SHEET No.	TOTAL SHEETS
03	ED	50	78.9/79.5	43	78

M Anand 6-23-11
REGISTERED CIVIL ENGINEER DATE

11-7-11
PLANS APPROVAL DATE

REGISTERED PROFESSIONAL ENGINEER A. MAGANTI No. C74128 Exp. 6-30-13 CIVIL STATE OF CALIFORNIA

THE STATE OF CALIFORNIA OR ITS OFFICERS OR AGENTS SHALL NOT BE RESPONSIBLE FOR THE ACCURACY OR COMPLETENESS OF SCANNED COPIES OF THIS PLAN SHEET.

ROADWAY QUANTITIES

STATION LIMITS		HMA (TYPE-A) MAINLINE	HMA (TYPE-A) SHOULDER WIDENING	HMA (TYPE-A) DRIVEWAY TAPER	HMA (TYPE-A) SIDEWALK	PLACE HMA (Misc AREA)	TACK COAT	ROADWAY EXCAVATION	COLD PLANE AC PAVEMENT	CLASS 2 AGGREGATE BASE CURB RAMP	CLASS 2 AGGREGATE BASE SIDEWALK	CLASS 2 AGGREGATE BASE DRIVEWAY	CLASS 2 AGGREGATE BASE SHOULDER WIDENING	REMOVE CONCRETE (CURB & GUTTER)	REMOVE MISC CONCRETE (CURB RAMP & DRIVEWAY)	MINOR CONCRETE (CURB & GUTTER)	MINOR CONCRETE (DRIVEWAY)	MINOR CONCRETE (CURB RAMP)
		TON	TON	TON	TON	SQYD	TON	CY	SQYD	CY	CY	CY	CY	LF	SQYD	CY	CY	CY
"A" 199+56.00 To "A" 201+42.12	Lt	64.26	40.71				0.04	29.04	579.31				46.51	186.51		11.90		
"A" 201+42.12 To "A" 201+91.36	Lt	16.89	5.91				0.01	16.81	152.27			4.15	5.00	49.28	24.89	3.14	4.15	
"A" 201+91.36 To "A" 203+04.24	Lt	38.70	13.34				0.01	17.61	348.88				10.60	112.93		7.20		
"A" 203+04.24 To "A" 203+55.98	Lt	12.26	5.62				0.01	18.76	231.28			4.85	4.49	51.78	29.07	3.30	4.85	
"A" 203+55.98 To "A" 205+06.65	Lt	183.80	16.59				0.34	23.51	1177.36				11.64	160.76		10.26		
"A" 205+06.65 To "A" 205+87.50	Lt	244.93					0.38		1628.35				25.66	0.00				
"A" 205+87.50 To "A" 211+88.54	Lt	759.92	138.08				2.29	197.12	4624.34				83.48	606.52		38.69		
"A" 211+88.54 To "A" 212+47.99	Lt	74.67	13.58	58.08		161.84	0.23	42.47	455.79		6.38	3.90	10.79	59.44	38.26	3.79	6.38	
"A" 212+47.99 To "A" 218+40.00	Lt	723.38	125.39				2.23	194.16	4446.94				99.64	549.21		35.03		
SUB TOTAL		2118.82	359.23	58.08	0.00	161.84	5.53	539.46	13644.52	0.00	6.38	12.89	297.79	1776.44	92.22	113.32	15.37	0.00
"A" 199+41.00 To "A" 199+99.05	Rt	20.15	6.83	4.64		12.92	0.01	27.98	181.63		6.44	2.17	17.50	58.05		3.70	6.44	
"A" 199+99.05 To "A" 200+77.30	Rt	27.36	9.83		13.10	52.17	0.01	28.47	246.69		8.69		7.81	78.25		4.99		
"A" 200+77.30 To "A" 201+31.66	Rt	18.78	21.21	4.32		12.04	0.01	26.19	169.34		6.72	1.98	5.36	54.44		3.47	6.72	
"A" 201+31.66 To "A" 205+08.23	Rt	419.64	54.52		81.08	302.90	0.38	146.24	2385.31	4.20	53.79		47.09	392.48	4.20	25.04		4.20
"A" 205+08.23 To "A" 205+82.90	Rt	374.63					0.58		2369.54					0.00				
"A" 205+82.90 To "A" 206+16.23	Rt	52.97	9.38		3.51	13.98	0.13	22.63	318.25	2.17	2.33		7.02	47.02	2.17	3.00		2.17
"A" 206+16.23 To "A" 207+14.01	Rt	126.66	22.45		14.23	56.65	0.37	52.39	773.02		9.09		17.64	97.94		6.25		
"A" 207+14.01 To "A" 207+62.27	Rt	61.14	10.74	1.70		4.73	0.18	29.36	374.16		4.34	0.79	8.52	46.94	26.02	2.99	4.34	
"A" 207+62.27 To "A" 208+45.33	Rt	107.21	18.95		11.61	46.21	0.32	44.50	654.72		7.70		15.06	82.98		5.29		
"A" 208+45.33 To "A" 209+80.76	Rt	174.95	30.93		18.80	74.82	0.52	72.56	1068.29		12.52		24.60	135.39		8.64		
"A" 209+80.76 To "A" 210+21.02	Rt	52.17	9.22	3.58		9.98	0.15	26.70	318.48		3.73	1.67	7.33	40.37	22.40	2.57	3.73	
"A" 210+21.02 To "A" 210+80.66	Rt	77.05	13.62		8.33	33.17	0.23	31.95	470.50		5.53		10.83	59.67		3.81		
"A" 210+80.66 To "A" 211+77.93	Rt	125.84	22.24		13.59	54.09	0.37	52.12	768.32		9.03		17.68	97.45		6.22		
"A" 211+77.93 To "A" 212+05.27	Rt	35.29	6.24		3.79	15.09	0.10	14.64	215.50		2.52		4.96	27.32		1.74		
"A" 212+05.27 To "A" 212+53.16	Rt	61.69	10.90	6.21		17.31	0.18	33.76	376.76		4.48	2.91	8.67	47.79		3.05	4.48	
"A" 212+53.16 To "A" 213+04.69	Rt	66.93	11.83	5.57		15.51	0.20	35.19	408.52		4.73	2.59	9.40	51.83		3.31	4.73	
"A" 213+04.69 To "A" 213+29.46	Rt	31.84	5.61		3.44	13.68	0.09	13.27	194.57		2.28		4.59	24.57		1.57		
"A" 213+29.46 To "A" 213+96.25	Rt	74.72	13.17	12.12		13.50	0.25	43.19	462.26		5.33	2.25	10.45	58.37		3.72	5.33	
"A" 213+96.25 To "A" 214+19.49	Rt	29.85	5.28		3.22	12.83	0.09	12.45	182.34		2.14		4.19	23.11		1.47		
"A" 214+19.49 To "A" 214+61.90	Rt	54.96	9.71	5.48		15.27	0.16	29.87	335.50		3.94	2.54	7.72	42.54		2.71	3.94	
"A" 214+61.90 To "A" 214+72.29	Rt	13.42	2.37		1.45	5.77	0.04	5.57	81.97		0.96		1.89	10.38		0.66		
"A" 214+72.29 To "A" 215+15.07	Rt	55.24	9.76	3.98		11.10	0.16	28.56	337.31		3.96	1.85	7.76	42.74		2.73	3.96	
"A" 215+15.07 To "A" 215+52.32	Rt	47.57	8.41		5.14	20.48	0.14	19.96	290.75		3.41		6.68	36.87		2.35		
"A" 215+52.32 To "A" 218+40.00	Rt	364.90	62.01				1.09	154.12	2240.10				49.56					
SUB TOTAL		2474.96	375.22	47.59	181.29	814.20	5.76	951.63	15,223.83	6.37	163.67	18.75	302.31	1556.48	54.79	99.29	43.67	6.37
TOTAL		4593.77	734.45	105.67	181.29	976.03	11.30	1491.10	28,868.35	6.37	170.05	31.64	600.11	3332.93	147.01	212.61	59.04	6.37
GRAND TOTAL		5615.18				976.03	11.30	1491.10	28,868.35	808.17				3332.93	147.01	212.61	59.04	6.37

SUMMARY OF QUANTITY

Q-1

STATE OF CALIFORNIA - DEPARTMENT OF TRANSPORTATION
Caltrans®
NORTH REGION
DIVISION OF ENGINEERING
BRANCH M4

CALCULATED-DESIGNED BY ANAND MAGANTI
CHECKED BY TAREK TABSHOURI
FUNCTIONAL SUPERVISOR TAREK TABSHOURI
REVISED BY
DATE REVISED

LAST REVISION 06-15-11
DATE PLOTTED => 10-NOV-2011
TIME PLOTTED => 16:57

Dist	COUNTY	ROUTE	POST MILES TOTAL PROJECT	SHEET No.	TOTAL SHEETS
03	ED	50	78.9/79.5	44	78

M Anand 6-23-11
REGISTERED CIVIL ENGINEER DATE

11-7-11
PLANS APPROVAL DATE

REGISTERED PROFESSIONAL ENGINEER
A. MAGANTI
No. C74128
Exp. 6-30-13
CIVIL
STATE OF CALIFORNIA

THE STATE OF CALIFORNIA OR ITS OFFICERS OR AGENTS SHALL NOT BE RESPONSIBLE FOR THE ACCURACY OR COMPLETENESS OF SCANNED COPIES OF THIS PLAN SHEET.

ADJUST SEWER MANHOLE TO GRADE

STATION	OFFSET	SIDE	QUANTITY (EA)
200+92.55	29.09	R+	1
205+63.07	29.58	L+	1
205+76.88	30.10	L+	1
209+19.26	26.76	L+	1
209+19.77	28.97	R+	1
212+19.16	26.81	L+	1
212+19.84	28.86	R+	1
217+19.74	29.70	R+	1
TOTAL			8

ADJUST FIRE HYDRANT TO GRADE (BY OTHERS)

STATION	OFFSET	SIDE	QUANTITY (N)
201+57.30	37.20	R+	1
209+78.57	40.16	R+	1
TOTAL			2

(N) - NOT A SEPARATE PAY ITEM, FOR INFORMATION ONLY.

ADJUST WATER VALVE COVER TO GRADE

STATION	OFFSET	SIDE	QUANTITY (EA)
201+09.22	40.90	L+	1
201+56.41	23.20	R+	1
201+58.12	20.20	R+	1
207+79.78	33.76	L+	1
TOTAL			4

ADJUST TELEPHONE VAULT TO GRADE

STATION	OFFSET	SIDE	QUANTITY (EA)
201+95.46	40.0	L+	1
203+04.80	47.8	R+	1
204+50.16	49.0	R+	1
TOTAL			3

STRUCTURE EXCAVATION (TYPE-DH)

STATION	SIDE	QUANTITY (CY)
205+50 TO 209+00	L+/R+	120

CURB RAMP DETECTABLE WARNING SURFACE

STATION	OFFSET	SIDE	QUANTITY (SQFT)
204+97.50	47.90	L+	14
205+97.30	48.30	L+	32
TOTAL			46

SUMMARY OF QUANTITIES

Q-2

REVISED BY | DATE REVISED
ANAND MAGANTI | TAREK TABSHOURI
CALCULATED-DESIGNED BY | CHECKED BY
FUNCTIONAL SUPERVISOR: TAREK TABSHOURI
STATE OF CALIFORNIA - DEPARTMENT OF TRANSPORTATION
Caltrans
NORTH REGION
DIVISION OF ENGINEERING
BRANCH M4

LAST REVISION 06-15-11 | DATE PLOTTED => 14-NOV-2011 | TIME PLOTTED => 13:51

Dist	COUNTY	ROUTE	POST MILES TOTAL PROJECT	SHEET No.	TOTAL SHEETS
03	ED	50	78.9/79.5	45	78

Normanye 6-23-11
REGISTERED ELECTRICAL ENGINEER DATE

11-7-11
PLANS APPROVAL DATE

REGISTERED PROFESSIONAL ENGINEER NORMAN YE No. E16913 Exp. 6/30/13 ELECTRICAL STATE OF CALIFORNIA

THE STATE OF CALIFORNIA OR ITS OFFICERS OR AGENTS SHALL NOT BE RESPONSIBLE FOR THE ACCURACY OR COMPLETENESS OF SCANNED COPIES OF THIS PLAN SHEET.

NOTE:

FOR ACCURATE RIGHT OF WAY DATA, CONTACT RIGHT OF WAY ENGINEERING AT THE DISTRICT OFFICE.

PROJECT NOTES (THIS SHEET ONLY)

1. SEE DETAIL 'A' THIS SHEET FOR DETECTOR LOOP WIRES CONNECTION.
2. RC PULL BOX.
3. Exist ELECTRONIC TAG READER ANNTENA.
4. Exist CCTV.
5. Exist MODEL 332 CONTROLLER CABINET.
6. Exist TYPE III-AF SERVICE EQUIPMENT ENCLOSURE (CTID No. 03250500079280).
7. THE EXACT LOCATION WILL BE DETERMINED BY ENGINEER.
8. Exist 1½"C, 2#10 (ELECTRONIC TAG READER).
9. CONNECT NEW AND Exist RISER CONDUIT (2"C, 3#2).

ABBREVIATIONS

CTID No.	- CALTRANS IDENTIFICATION NUMBER
Dtr	- DETECTOR
ETR	- ELECTRONIC TAG READER
SPP Co.	- SIERRA PACIFIC POWER COMPANY
VIVDS	- VIDEO IMAGE VEHICLE DETECTION SYSTEM

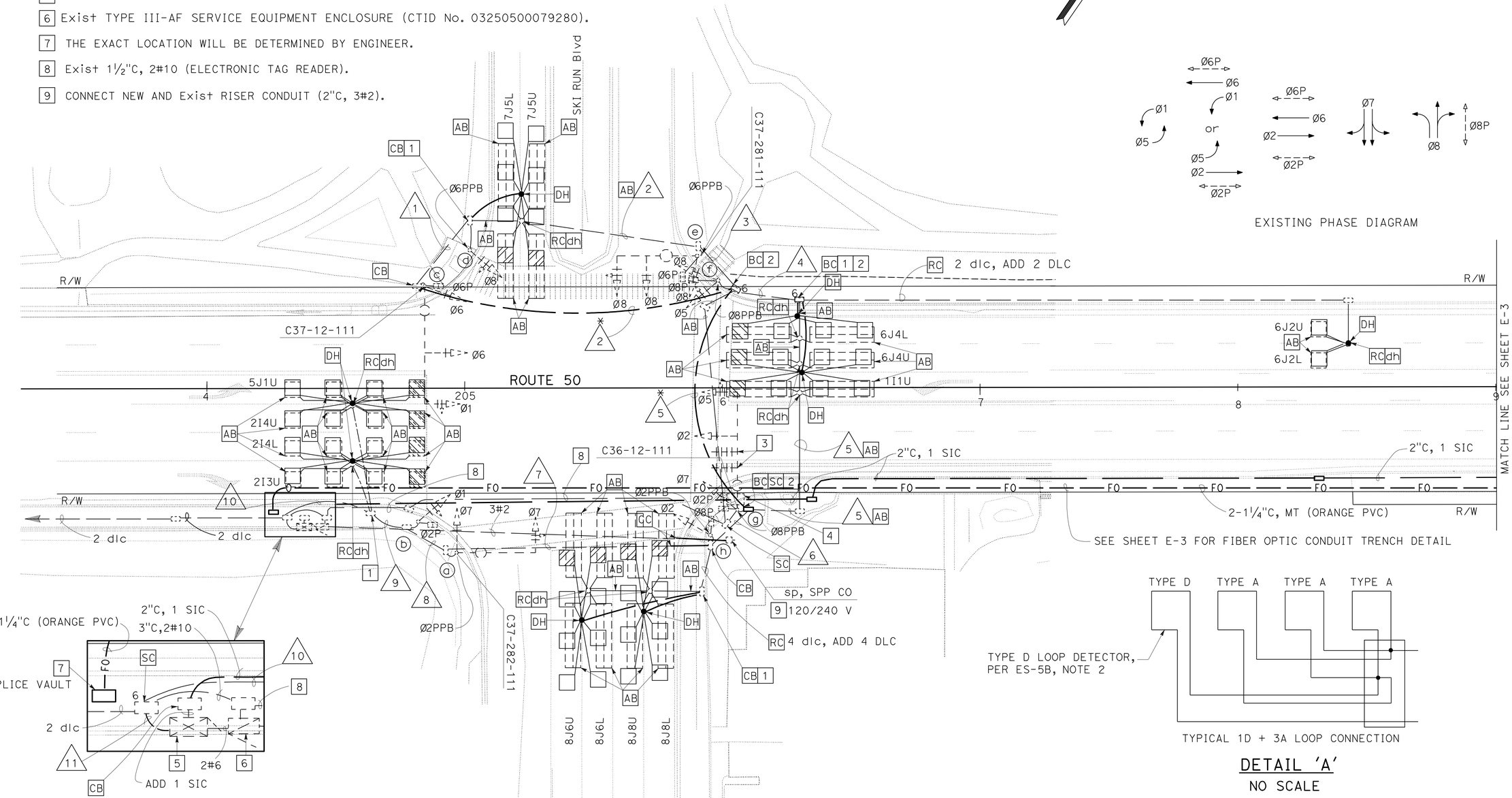

THIS PLAN ACCURATE FOR ELECTRICAL WORK ONLY.

MODIFY SIGNAL AND LIGHTING COMMUNICATION CONDUIT

SCALE: 1" = 20'

E-1

REVISED BY	DATE REVISED
NY	06-08-11

CALCULATED-DESIGNED BY: OANH D. NGUYEN
CHECKED BY: NORMAN YE
FUNCTIONAL SUPERVISOR: NELSON LEE

STATE OF CALIFORNIA - DEPARTMENT OF TRANSPORTATION
Caltrans® OFFICE OF ELECTRICAL DESIGN

LAST REVISION 06-22-11 | DATE PLOTTED => 15-NOV-2011 | TIME PLOTTED => 06:57

Dist	COUNTY	ROUTE	POST MILES TOTAL PROJECT	SHEET No.	TOTAL SHEETS
03	ED	50	78.9/79.5	46	78

Normanye 6-23-11
REGISTERED ELECTRICAL ENGINEER DATE

11-7-11
PLANS APPROVAL DATE

REGISTERED PROFESSIONAL ENGINEER
NORMAN YE
No. E16913
Exp. 6-30-13
ELECTRICAL
STATE OF CALIFORNIA

THE STATE OF CALIFORNIA OR ITS OFFICERS OR AGENTS SHALL NOT BE RESPONSIBLE FOR THE ACCURACY OR COMPLETENESS OF SCANNED COPIES OF THIS PLAN SHEET.

MODIFY CONDUIT AND CONDUCTOR SCHEDULE

CONDUCTOR DESIGNATION		NUMBER OF CODUCTORS										
AWG	CIRCUIT	CONDUIT RUN NUMBER AND SIZE										
		1	✳ 2	3	4	✳ 5	6	7	8	9	10	11
#14	PHASE 1		3			3	3	3	3	3	3	3
	PHASE 2						3	3	3	3	3	3
	PHASE 5					3	3	3	3	3	3	3
	PHASE 6		3			3	3	3	3	3	3	3
	PHASE 7						3	3	3	3	3	3
	PHASE 8	3	3	3		3	3	3	3	3	3	3
	PHASE 2P						2	2	2	2	2	2
	PHASE 6P		2			2	2	2	2	2	2	2
	PHASE 8P			2		2	2	2	2	2	2	2
	PHASE 2 PPB							1	1	1	1	1
	PHASE 6 PPB	1	1	1		1	1	1	1	1	1	1
	PHASE 8 PPB					1	1	1	1	1	1	1
	PPB COMMON	1	1	1		1	1	1	1	1	1	1
	SPARES	3	3	3		3	3	3	3	3	3	3
	TOTAL	8	16	10		22	30	31	31	31	31	31
#10	LUMINAIRES		2	2		2	2	2	2	2	2	
	SIGNAL COMMON	1	1	1		1	1	1	1	1	1	1
	ETR						2					
	TOTAL	1	3	3		3	5	3	3	3	3	1
	CCTV CABLE						1	1	1	1	1	1
DLC	PHASE 1 Dtr				1	1	1	1	1	1	1	1
	PHASE 2 Dtr										3	2 ✳✳ 3
	PHASE 5 Dtr										1	1
	PHASE 6 Dtr				4	4	4	4	4	4	4	4
	PHASE 7 Dtr	2	2			2	2	2	2	2	2	2
	PHASE 8 Dtr							4	4	4	4	4
	TOTAL	2	2		5	7	7	11	11	11	15	17
#8	GROUND	1	1	1	1	1	1	1	1	1	1	1
	CONDUCTOR SIZE	2"	3"	2"	2"	3"	3"	3½"	3½"	4"	3½"	2-3"

NOTES:
ALL CONDUITS ARE Exist UNLESS OTHERWISE NOTED.
ALL CONDUCTORS ARE NEW UNLESS OTHERWISE NOTED.
RC Exist CONDUCTORS. REUSE CCTV CABLE.

LEGEND:

✳ NEW CONDUIT
✳✳ Exist CONDUCTORS

EXISTING POLE AND EQUIPMENT SCHEDULE

No.	STANDARD			VEHICLE SIGNAL MOUNTING				PEDESTRIAN SIGNAL		PPB		HPS LUMINAIRE
	TYPE	SMA (FEET)	LMA (FEET)	Ø	MAST ARM	Ø	POLE	Ø	MOUNTING	Ø	ARROW	(WATTS)
ⓐ	19-3-80	25	12	7	MAT	7	SV-1-T			2	←	200
ⓑ	1-B					1	TV-1-T	2	SP-1-T			
ⓒ	26-4-80	45	12	1 6	MAT MAS	6	SV-1-T	6	SP-1-T			200
ⓓ	1-B					8	TV-1-T			6	→	
ⓔ	26-4-80	45	12	8 8	MAT MAS	8	SV-1-T	8	SP-1-T	6	←	200
ⓕ	1-B					5	TV-1-T	6	SP-1-T	8	→	
ⓖ	26-4-80	40	12	5 2	MAT MAS	7	SV-1-T	2	SP-1-T	8	←	200
ⓗ	1-B					2	TV-1-T	8	SP-1-T	2	→	

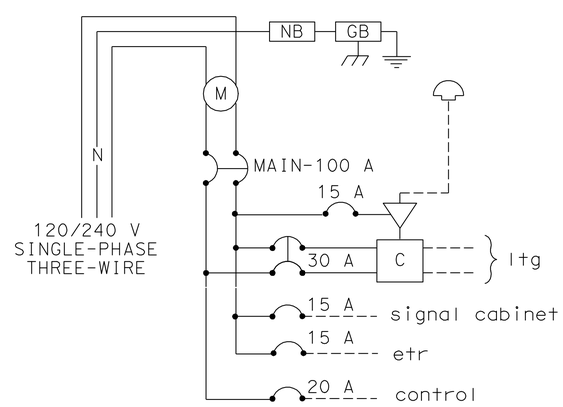

EXISTING SERVICE WIRING DIAGRAM
CTID No. 03250500079280

WIRING DIAGRAM LEGEND:

M METER SOCKET AND SUPPORT
C CONTACTOR
AUTO TEST SWITCH
PHOTOELECTRIC UNIT
etr ELECTRONIC TAG READER

THIS PLAN ACCURATE FOR ELECTRICAL WORK ONLY.

MODIFY SIGNAL AND LIGHTING (CONDUCTOR, POLE AND EQUIPMENT SCHEDULES)

E-2

STATE OF CALIFORNIA - DEPARTMENT OF TRANSPORTATION
Caltrans
OFFICE OF ELECTRICAL DESIGN
FUNCTIONAL SUPERVISOR: NELSON LEE
CALCULATED-DESIGNED BY: OANH D. NGUYEN
CHECKED BY: NORMAN YE
REVISED BY: NY
DATE REVISED: 06-08-11

LAST REVISION DATE PLOTTED => 15-NOV-2011
TIME PLOTTED => 06:57
06-22-11

Dist	COUNTY	ROUTE	POST MILES TOTAL PROJECT	SHEET No.	TOTAL SHEETS
03	ED	50	78.9/79.5	47	78

Normanye 6-23-11
REGISTERED ELECTRICAL ENGINEER DATE

11-7-11
PLANS APPROVAL DATE

REGISTERED PROFESSIONAL ENGINEER
NORMAN YE
No. E16913
Exp. 6-30-13
ELECTRICAL
STATE OF CALIFORNIA

THE STATE OF CALIFORNIA OR ITS OFFICERS OR AGENTS SHALL NOT BE RESPONSIBLE FOR THE ACCURACY OR COMPLETENESS OF SCANNED COPIES OF THIS PLAN SHEET.

NOTE:

FOR ACCURATE RIGHT OF WAY DATA, CONTACT
RIGHT OF WAY ENGINEERING AT THE DISTRICT OFFICE.

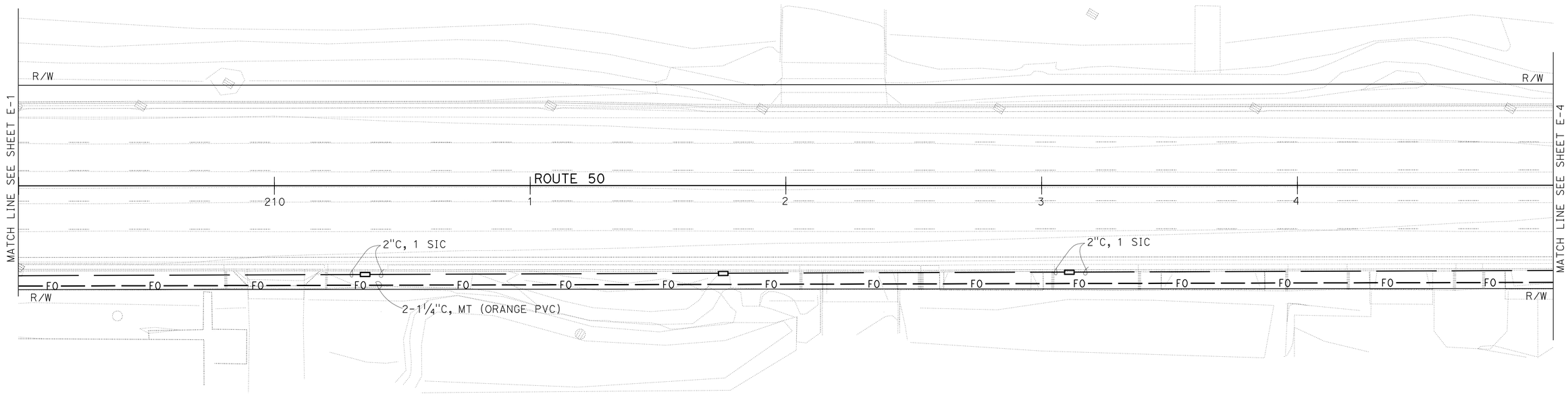

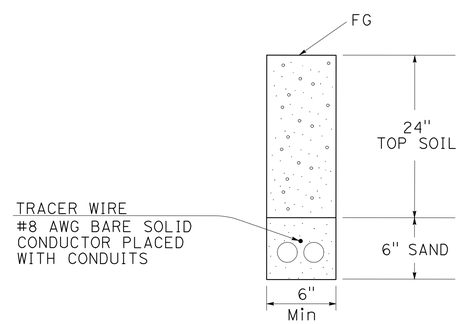

FIBER OPTIC CONDUIT TRENCH DETAIL

NO SCALE

COMMUNICATION CONDUIT

SCALE: 1" = 20'

THIS PLAN ACCURATE FOR ELECTRICAL WORK ONLY.

E-3

STATE OF CALIFORNIA - DEPARTMENT OF TRANSPORTATION
Caltrans

FUNCTIONAL SUPERVISOR: STEVEN S. LEE
CALCULATED-DESIGNED BY: OANH D. NGUYEN
CHECKED BY: NORMAN YE
REVISED BY
DATE REVISED

LAST REVISION 06-22-11
DATE PLOTTED => 15-NOV-2011
TIME PLOTTED => 06:57

Dist	COUNTY	ROUTE	POST MILES TOTAL PROJECT	SHEET No.	TOTAL SHEETS
03	ED	50	78.9/79.5	48	78

Normanye 6-23-11
REGISTERED ELECTRICAL ENGINEER DATE

11-7-11
PLANS APPROVAL DATE

REGISTERED PROFESSIONAL ENGINEER NORMAN YE No. E16913 Exp. 6-30-13 ELECTRICAL STATE OF CALIFORNIA

THE STATE OF CALIFORNIA OR ITS OFFICERS OR AGENTS SHALL NOT BE RESPONSIBLE FOR THE ACCURACY OR COMPLETENESS OF SCANNED COPIES OF THIS PLAN SHEET.

NOTE:

FOR ACCURATE RIGHT OF WAY DATA, CONTACT
RIGHT OF WAY ENGINEERING AT THE DISTRICT OFFICE.

PROJECT NOTES (THIS SHEET ONLY)

1. SEE DETAIL 'A', THIS SHEET FOR DETECTOR LOOP WIRES CONNECTION.
2. To AT&T Service
3. 120/240 V
4. SPP Co. Service Box
5. Exist TYPE 332 CONTROLLER CABINET
6. 120/240 V Service Pedestal

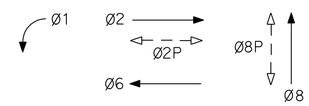

EXISTING PHASE DIAGRAM

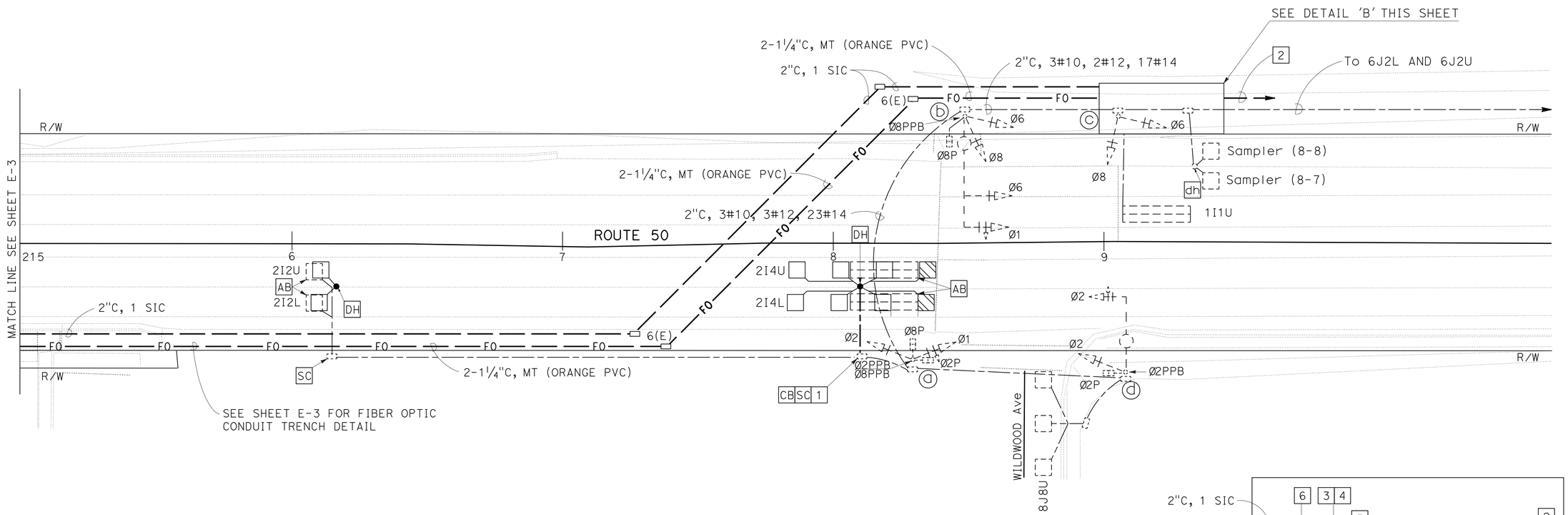

EXISTING POLE AND EQUIPMENT SCHEDULE					
No.	STANDARD	SIGNAL		PED SIG	
		TYPE	MTG	TYPE	MTG
(a)	1-B	2W3L	TV-2-T	2W2L	SP-CS-L
(b)	19	1W3L 1W3L 2W3L	MAT MAS SV-2-T	1W2L	SP-CS-R
(c)	1-B	2W3L	TV-2-T		
(d)	17	1W3L 2W3L 1W3L	MAT SV-2-T	1W2L	SP-CS-L

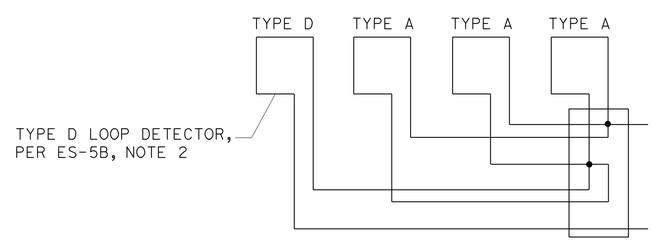

TYPICAL 1D + 3A LOOP CONNECTION

DETAIL 'A'
NO SCALE

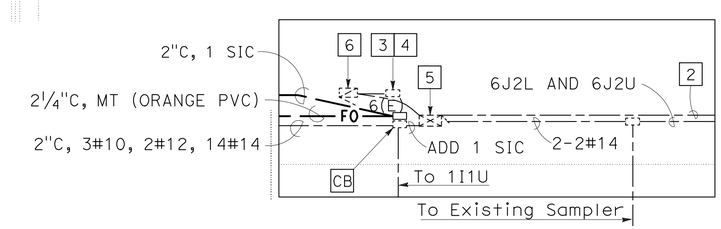

DETAIL 'B'
NO SCALE

MODIFY SIGNAL AND LIGHTING COMMUNICATION CONDUIT

SCALE: 1" = 20'

E-4

THIS PLAN ACCURATE FOR ELECTRICAL WORK ONLY.

REVISED BY | DATE REVISED
OANH D. NGUYEN | NORMAN YE
CALCULATED-DESIGNED BY | CHECKED BY
FUNCTIONAL SUPERVISOR | STEVEN S. LEE
STATE OF CALIFORNIA - DEPARTMENT OF TRANSPORTATION
Caltrans

LAST REVISION 06-22-11 | DATE PLOTTED => 15-NOV-2011 | TIME PLOTTED => 06:57

Dist	COUNTY	ROUTE	POST MILES TOTAL PROJECT	SHEET No.	TOTAL SHEETS
03	ED	50	78.9/79.5	49	78

Normanye 6-23-11
REGISTERED ELECTRICAL ENGINEER DATE

11-7-11
PLANS APPROVAL DATE

REGISTERED PROFESSIONAL ENGINEER NORMAN YE No. E 16913 Exp. 6-30-13 ELECTRICAL STATE OF CALIFORNIA

THE STATE OF CALIFORNIA OR ITS OFFICERS OR AGENTS SHALL NOT BE RESPONSIBLE FOR THE ACCURACY OR COMPLETENESS OF SCANNED COPIES OF THIS PLAN SHEET.

NOTE:

FOR ACCURATE RIGHT OF WAY DATA, CONTACT RIGHT OF WAY ENGINEERING AT THE DISTRICT OFFICE.

NOTES:

1. SEE MODIFY CONDUIT AND CONDUCTOR SCHEDULE ON SHEET E-2 FOR CONDUIT RUN.
2. FOR EXISTING POLE AND EQUIPMENT SCHEDULE (SEE SHEET E-2).

PROJECT NOTES (THIS SHEET ONLY)

1. INSTALL TEMPORARY WOOD POLE, FOR DETAILS SEE SHEET SES-2.
2. INSTALL SERVICE EQUIPMENT ENCLOSURE, SEE DETAIL ON SHEET E-6.
3. INSTALL TEMPORARY STATE-FURNISHED MODEL 2070 CONTROLLER ASSEMBLY AND BBS ON WOOD PALET. SEE DETAIL "A" ON SHEET E-6.
4. INSTALL VIVDS, SEE SHEET SES-1.
5. MESSENGER WIRE (3/8" 7 STRAND SPAN WIRE) WITH 17' Min VERTICAL CLEARANCE.
6. 9#14, 1#10
7. 16#14, 2#8, 1#10, 1 VIVDS CABLES.
8. 22#14, 2#8, 1#10, 2 VIVDS CABLES.
9. 19#14, 2#8, 1#10, 1 VIVDS CABLES.
10. 31#14, 2#8, 1#10, 4 VIVDS CABLES, 3#14 (120 V, PEU).

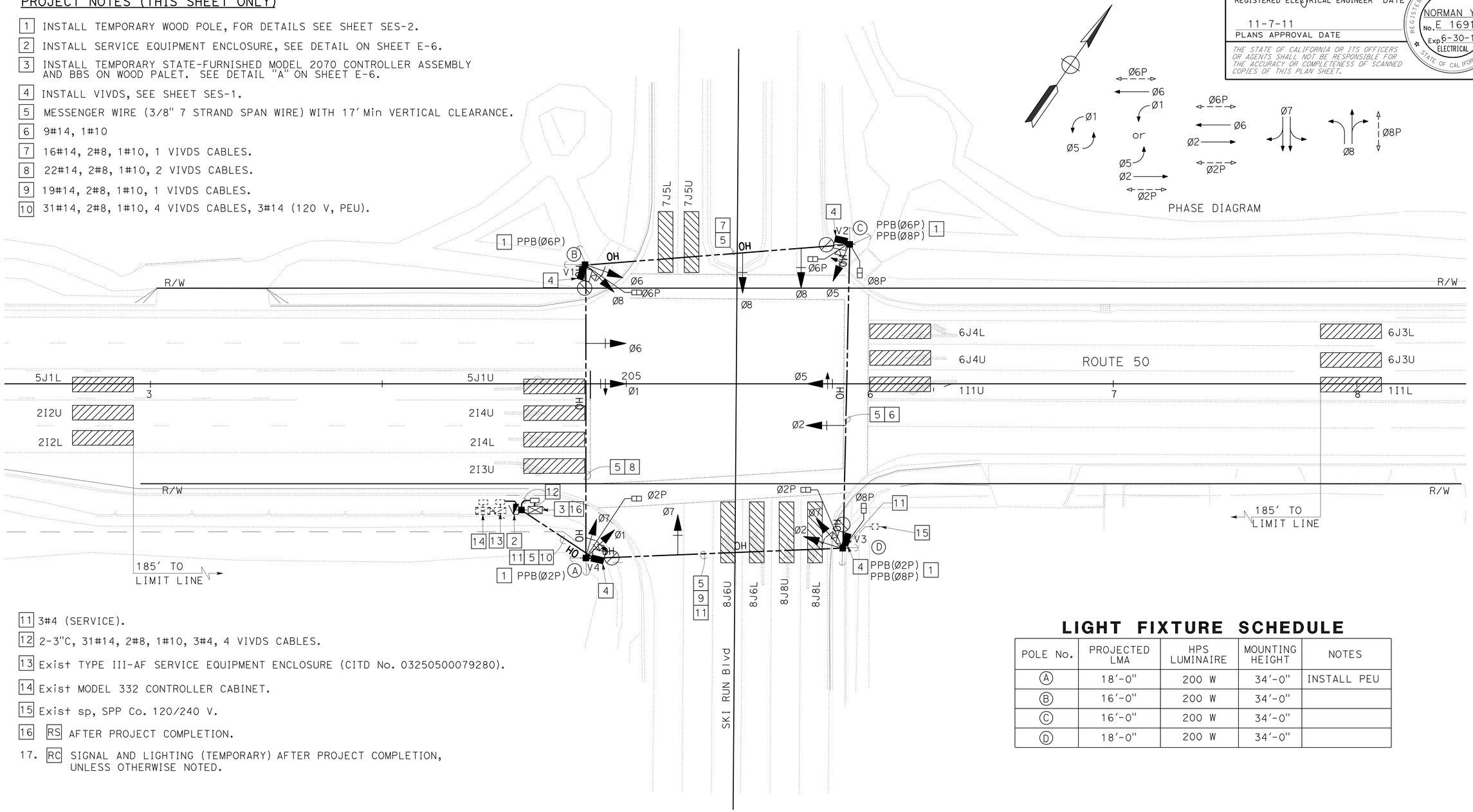

11. 3#4 (SERVICE).
12. 2-3"C, 31#14, 2#8, 1#10, 3#4, 4 VIVDS CABLES.
13. Exist TYPE III-AF SERVICE EQUIPMENT ENCLOSURE (CITD No. 03250500079280).
14. Exist MODEL 332 CONTROLLER CABINET.
15. Exist sp, SPP Co. 120/240 V.
16. RS AFTER PROJECT COMPLETION.
17. RC SIGNAL AND LIGHTING (TEMPORARY) AFTER PROJECT COMPLETION, UNLESS OTHERWISE NOTED.

LIGHT FIXTURE SCHEDULE

POLE No.	PROJECTED LMA	HPS LUMINAIRE	MOUNTING HEIGHT	NOTES
A	18'-0"	200 W	34'-0"	INSTALL PEU
B	16'-0"	200 W	34'-0"	
C	16'-0"	200 W	34'-0"	
D	18'-0"	200 W	34'-0"	

THIS PLAN ACCURATE FOR ELECTRICAL WORK ONLY.

SIGNAL AND LIGHTING (TEMPORARY)

SCALE: 1" = 20'

E-5

STATE OF CALIFORNIA - DEPARTMENT OF TRANSPORTATION
Caltrans OFFICE OF ELECTRICAL DESIGN
FUNCTIONAL SUPERVISOR: STEVEN S. LEE
CALCULATED-DESIGNED BY: OANH D NGUYEN
CHECKED BY: NORMAN YE
REVISED BY / DATE REVISED

LAST REVISION 06-22-11 | DATE PLOTTED => 15-NOV-2011 | TIME PLOTTED => 06:57

Dist	COUNTY	ROUTE	POST MILES TOTAL PROJECT	SHEET No.	TOTAL SHEETS
03	ED	50	78.9/79.5	50	78

Normanye 6-23-11
REGISTERED ELECTRICAL ENGINEER DATE

11-7-11
PLANS APPROVAL DATE

REGISTERED PROFESSIONAL ENGINEER
NORMAN YE
No. E16913
Exp. 6-30-13
ELECTRICAL
STATE OF CALIFORNIA

THE STATE OF CALIFORNIA OR ITS OFFICERS OR AGENTS SHALL NOT BE RESPONSIBLE FOR THE ACCURACY OR COMPLETENESS OF SCANNED COPIES OF THIS PLAN SHEET.

NOTES:

1. ALL METALLIC CONDUITS, BOLTS STRAPS AND Misc HARDWARE SHALL BE GALVANIZED.

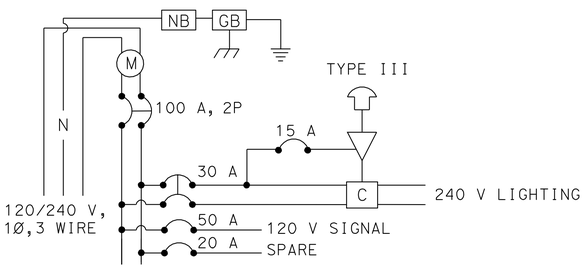

120/240 V SERVICE WIRING DIAGRAM

TEMPORARY SERVICE

WIRING DIAGRAM LEGEND:

- PHOTOELECTRIC UNIT
- AUTO TEST SWITCH
- C — CONTACTOR
- M — METER SOCKET WITH MANUAL CIRCUIT CLOSING DEVICE

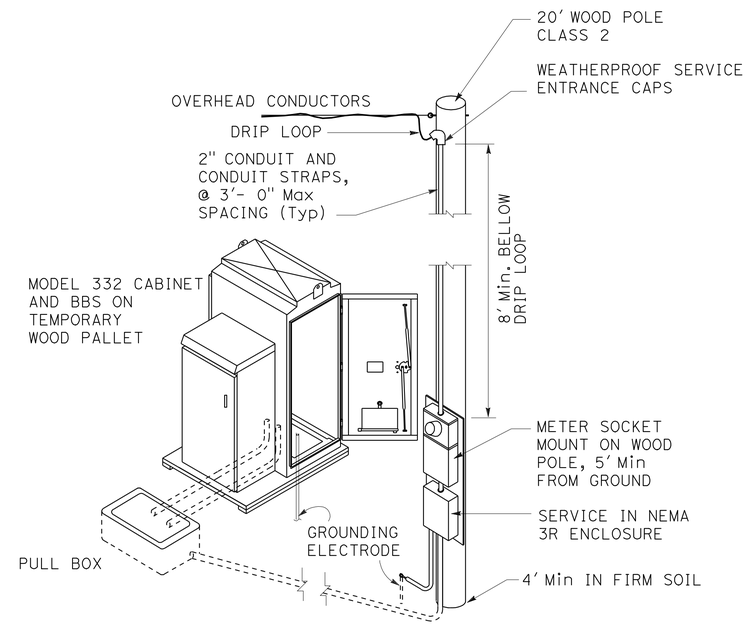

TEMPORARY MODEL 332
CABINET, BBS AND SERVICE

DETAIL "A"

THIS PLAN ACCURATE FOR ELECTRICAL WORK ONLY.

ELECTRICAL (DETAILS)

NO SCALE

E-6

REVISED BY	DATE REVISED

CALCULATED-DESIGNED BY: OANH D. NGUYEN
CHECKED BY: NORMAN YE
FUNCTIONAL SUPERVISOR: STEVEN S. LEE

STATE OF CALIFORNIA - DEPARTMENT OF TRANSPORTATION
Caltrans

LAST REVISION 06-22-11 | DATE PLOTTED => 15-NOV-2011 | TIME PLOTTED => 06:57

DIST	COUNTY	ROUTE	POST MILES TOTAL PROJECT	SHEET No	TOTAL SHEETS
03	ED	50	78.9/79.5	51	78

REGISTERED CIVIL ENGINEER DATE

11-7-11
PLANS APPROVAL DATE

REGISTERED PROFESSIONAL ENGINEER VICTOR O LOPEZ No. C61373 Exp. 6-30-2012 CIVIL STATE OF CALIFORNIA

The State of California or its officers or agents shall not be responsible for the accuracy or completeness of electronic copies of this plan sheet.

LUMINAIRE ARM DATA			
Projected Length	N Rise	Min OD At Pole	Thickness
15′-0"	4′-9"	4¼"	0.1196"

Refer to RSP ES-6A for Luminaire arm details

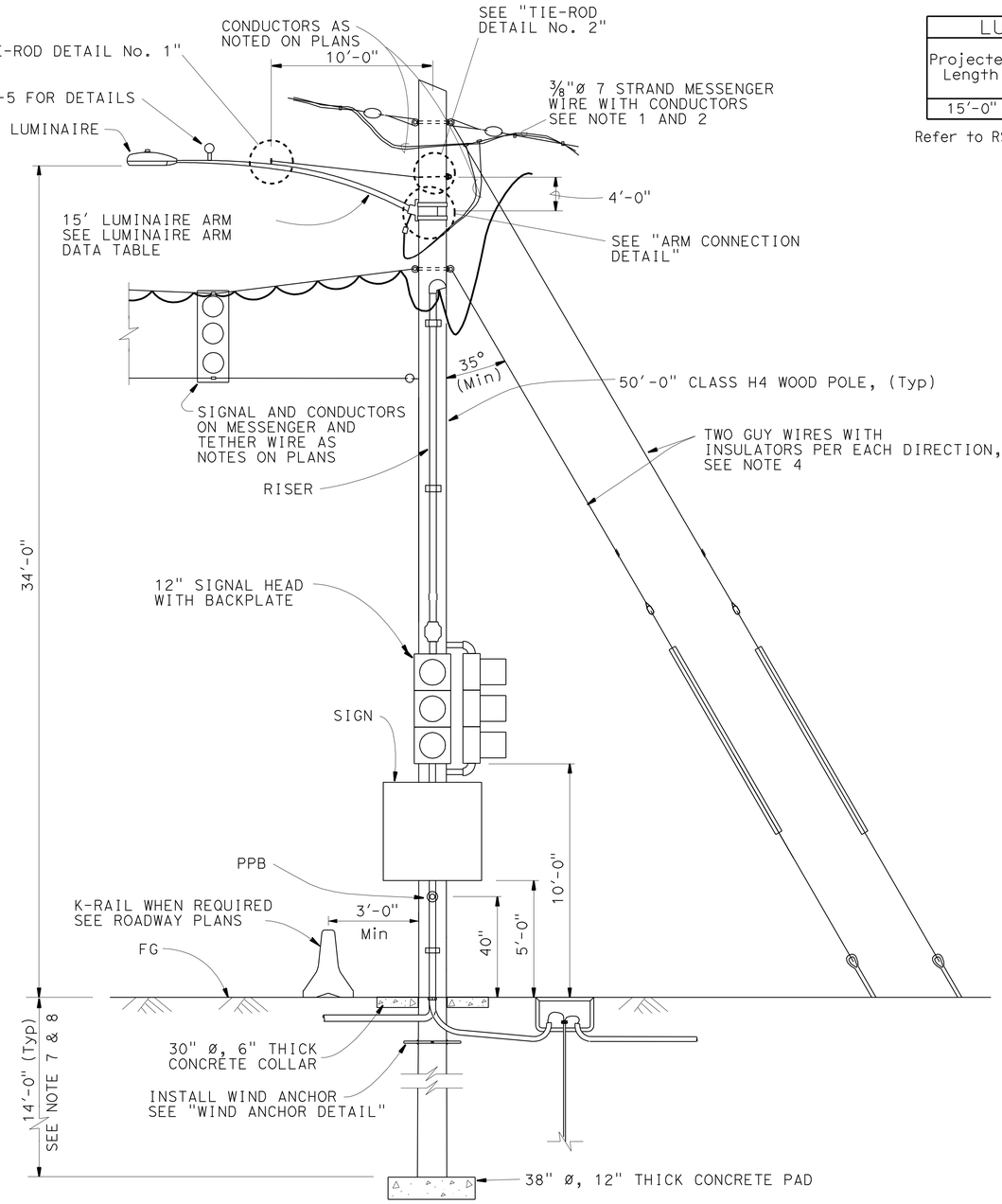

TYPICAL WOOD POLE SUPPORT WITH LUMINAIRE

NO SCALE

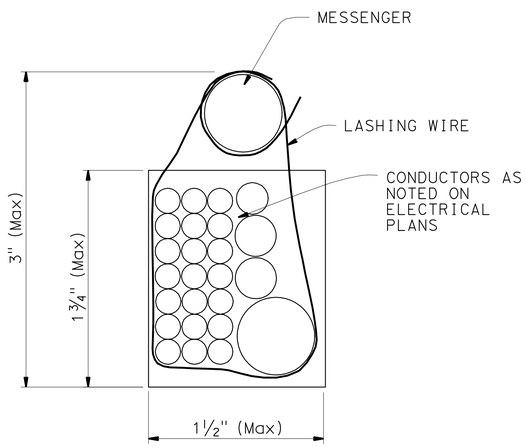

CONDUCTOR BUNDLING DETAIL

See Note 12

NOTE:
THE CONTRACTOR SHALL VERIFY ALL CONTROLLING FIELD DIMENSIONS BEFORE ORDERING OR FABRICATING ANY MATERIAL.

GENERAL NOTES:

SPECIFICATIONS

Design: AASHTO Standard Specifications for Structural Supports for Highway Signs, Luminaires and Traffic Signals dated 2001.

LOADING

Wind Loadings: 100 MPH
Ice Loading: 3.0 psf

UNIT STRESSES

Timber Poles: Fb = 1850 Tapered treated round pole
Fv = 110 psi ASTM D2899 Standard
E = 1500 x 10^3 psi

TREATMENT

To conform with Section 86 Standard Specifications

SPECIFICATIONS

Caltrans Standard Specifications May 2006
ANSI Wood Poles
Utility Grade Wires

NOTES:

1. All overhead cables shall be slack spanned with 25′-0" minimum overhead clearance.
2. Conductors shall be suspended from span-wire as follows: A) Main run ⅜" span-wire with 4.5%± sag and ¼" tether wire with 2% sag where required. No spare conductors allowed except as noted.
3. Overhead line construction not specifically covered here shall conform with the provisions of General Order No. 95 of Public Utilities Commission.
4. Wood poles shall be stabilized using guy wires, breast blocks or rakes at each dead end, corner, drop or line deviation more than 15° from straight line. The direction of the guy shall counteract the resultant of unbalanced force applied to pole. Where space or conflict prevent guy installation, a diagonal brace shall be used. The brace shall be wood and shall be connected to the pole by means to satisfy structural and electrical requirements. The direction of the brace shall counteract the resultant of unbalanced horizontal force of 7000 pounds (Min) applied to the pole.
5. Guy shall be attached to pole as nearly as practical to the center of conductors load, or 3′-0" Max otherwise, See Note 4.
6. All attachments shall be mounted with stainless steel straps or other manufacturers methods without drilling holes in pole, except as shown. Drilling through pole will require the Engineer's approval.
7. Foundation design is based on AASHTO 2001 article 13.6 Broms' approximate procedure assuming a cohessionless material. The angle of Internal friction used is 30° and unit weight of soil used is 120 lb/ft³ for backfill. Design based on soil load-bearing capacity of 1500 psf, shall be field verified.
8. If pole is located on a steep slope add 2 feet extra for embedment.
9. See Sheets SES-2 - SES-5 for details.
10. For details not shown, see "2006 STANDARD PLANS" and "2006 REVISED STANDARD PLANS"
11. All temporary poles support OH Conductors. Attach luminaire arm and/or combination of attachments as specified at locations where indicated on Electrical Sheets.
12. All overhead conductors shall be bundled into 1¾" (Max) compacted shape. No loose conductors allowed. See conductor Bundling Detail.

BRANCH CHIEF JAMES SAGAR

	BY	CHECKED
DESIGN	T MARCHENKO	V LOPEZ
DETAILS	H NGUYEN	V LOPEZ
QUANTITIES		

STATE OF CALIFORNIA DEPARTMENT OF TRANSPORTATION

DIVISION OF ENGINEERING SERVICES DESIGN AND TECHNICAL SERVICES SPECIAL DESIGNS BRANCH B

BRIDGE NO. N/A
POST MILE 78.9/79.5

SIGNAL AND LIGHTING (TEMPORARY)
TEMPORARY WOOD POLE

SES-1

(ENGLISH) SPECIAL DESIGNS BRANCH BORDER SHEET (REV. 7-1-09)

ORIGINAL SCALE IN INCHES FOR REDUCED PLANS 0 1 2 3

UNIT: 3619
PROJECT NUMBER & PHASE: 0300000216
CONTRACT NO.: 03-1A7341

DISREGARD PRINTS BEARING EARLIER REVISION DATES

REVISION DATES 6-16-11

SHEET OF

FILE => spec_des_br_prj/2011sd/03-1a7341_ses1.dgn

USERNAME => s12161 4 DATE PLOTTED => 14-NOV-2011 TIME PLOTTED => 10:44

DIST	COUNTY	ROUTE	POST MILES TOTAL PROJECT	SHEET No	TOTAL SHEETS
03	ED	50	78.9/79.5	52	78

REGISTERED CIVIL ENGINEER DATE

11-7-11
PLANS APPROVAL DATE

REGISTERED PROFESSIONAL ENGINEER VICTOR O LOPEZ No. C61373 Exp. 6-30-2012 CIVIL STATE OF CALIFORNIA

The State of California or its officers or agents shall not be responsible for the accuracy or completeness of electronic copies of this plan sheet.

NOTES:

1. All hardware and steel shall be galvanized after fabrication.
2. Arm Base connection details shall be in compliance with Standard Plans Detail Sheet ES-6A with noted modifications.
3. 3500 LB Min capacity strap system shall be used for top and bottom of plate.
4. The Contractor to verify pole dimensions at Tie-Rod attachment height. Fabricate 8" flat bar with "L" Dimension to maintain an open gap between encasement in finished installation.

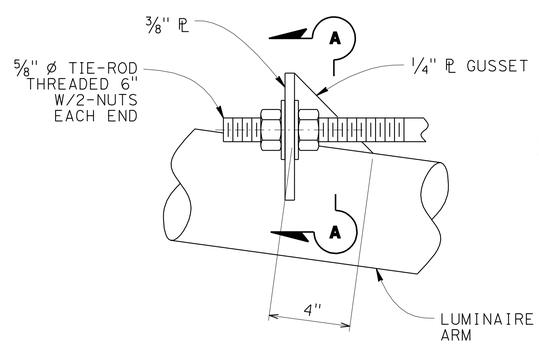

ELEVATION

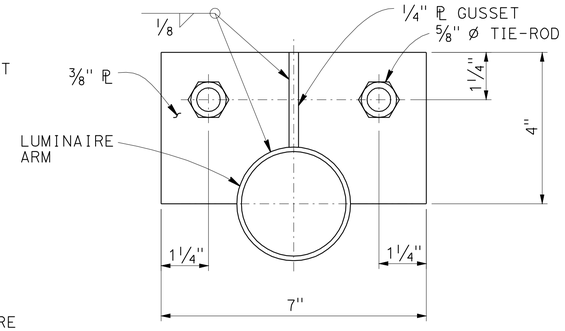

SECTION A-A

TIE-ROD DETAIL No. 1

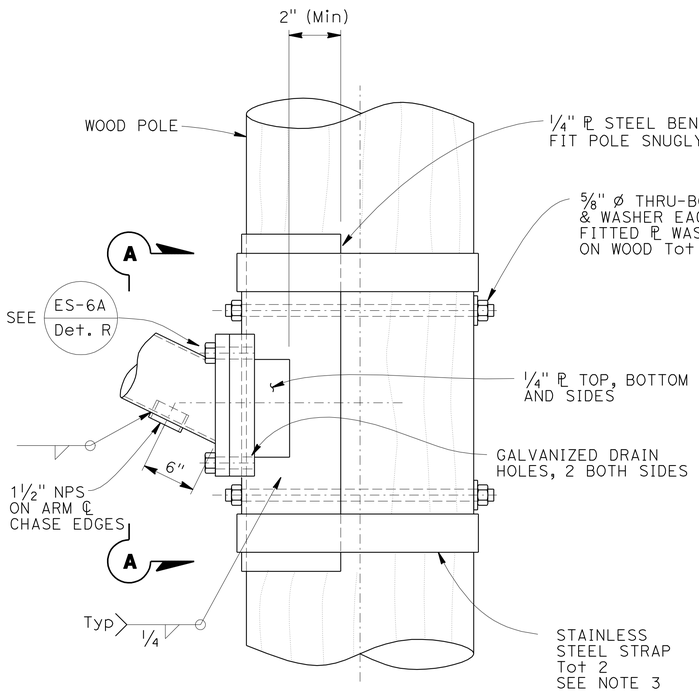

ELEVATION

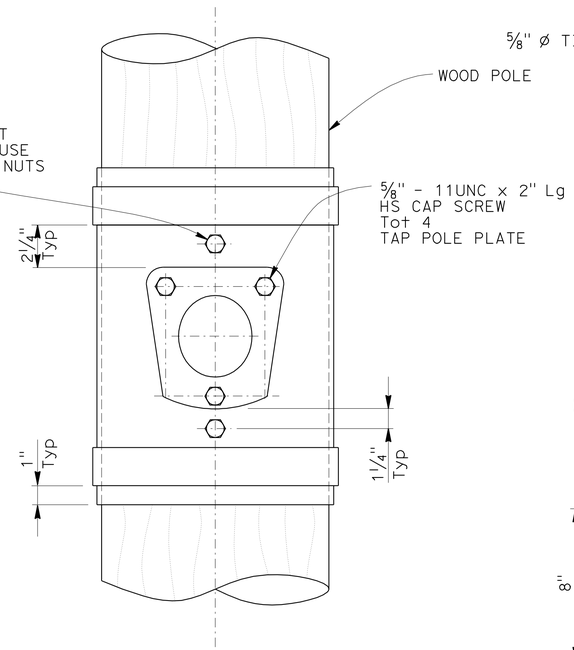

VIEW A-A

NOTE:
THE CONTRACTOR SHALL VERIFY ALL CONTROLLING FIELD DIMENSIONS BEFORE ORDERING OR FABRICATING ANY MATERIAL.

ARM CONNECTION DETAILS

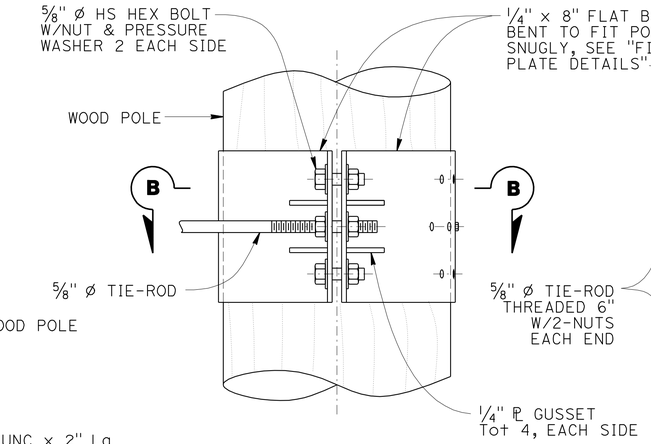

ELEVATION

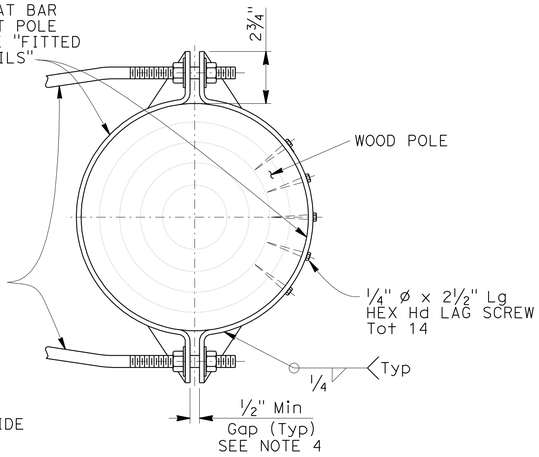

SECTION B-B

TIE-ROD DETAIL No. 2

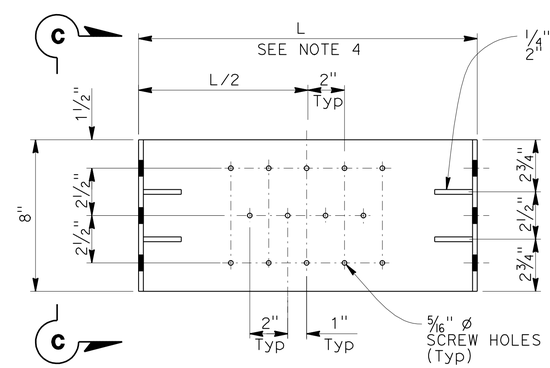

ELEVATION

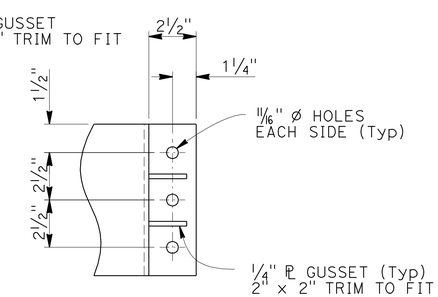

VIEW C-C

FITTED PLATE DETAILS

Note: 2 Required (1 w/screw holes, 1 without)

NO SCALE

BRANCH CHIEF JAMES SAGAR	DESIGN	BY T MARCHENKO	CHECKED V LOPEZ
	DETAILS	BY H NGUYEN	CHECKED V LOPEZ
	QUANTITIES	BY	CHECKED

STATE OF CALIFORNIA
DEPARTMENT OF TRANSPORTATION

DIVISION OF ENGINEERING SERVICES
DESIGN AND TECHNICAL SERVICES
SPECIAL DESIGNS BRANCH
B

BRIDGE NO. N/A
POST MILE 78.9/79.5

SIGNAL AND LIGHTING (TEMPORARY)
WOOD POLE MOUNTING DETAILS

SES-2

(ENGLISH) SPECIAL DESIGNS BRANCH BORDER SHEET (REV. 7-1-09)

ORIGINAL SCALE IN INCHES FOR REDUCED PLANS 0 1 2 3

UNIT: 3619
PROJECT NUMBER & PHASE: 0300000216
CONTRACT NO.: 03-1A7341

DISREGARD PRINTS BEARING EARLIER REVISION DATES

REVISION DATES 6-16-11

SHEET OF

FILE => spec_des_br_prj/2011sd/03-1a7341_ses2.dgn

USERNAME => s12161 4 DATE PLOTTED => 14-NOV-2011 TIME PLOTTED => 10:44

DIST	COUNTY	ROUTE	POST MILES TOTAL PROJECT	SHEET No	TOTAL SHEETS
03	ED	50	78.9/79.5	53	78

REGISTERED CIVIL ENGINEER DATE

11-7-11
PLANS APPROVAL DATE

REGISTERED PROFESSIONAL ENGINEER VICTOR O LOPEZ No. C61373 Exp. 6-30-2012 CIVIL STATE OF CALIFORNIA

The State of California or its officers or agents shall not be responsible for the accuracy or completeness of electronic copies of this plan sheet.

NOTE:

1. The Contractor to verify soil condition, slope, and adjust anchoring to satisfy basic design requirements Note 7 SES-1

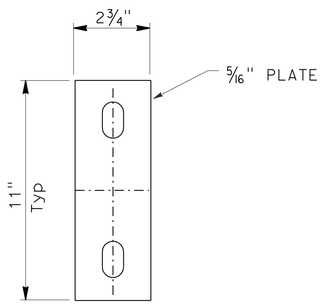

COMPARTMENT PLATE (Mod)

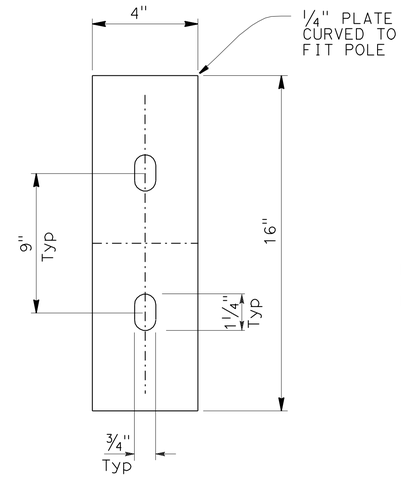

BACK PLATE

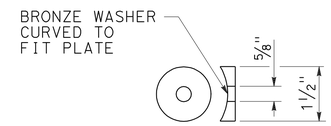

DETAIL "C"

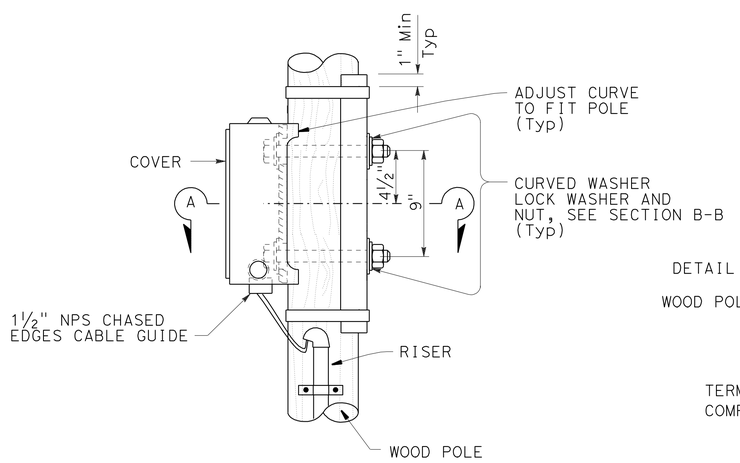

SIDE MOUNTING TERMINAL COMPARTMENT

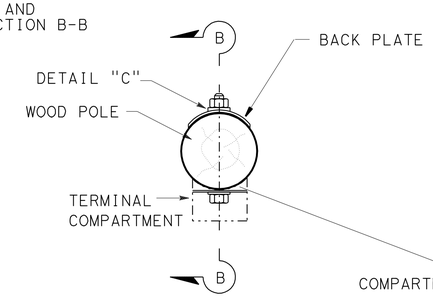

SECTION A-A

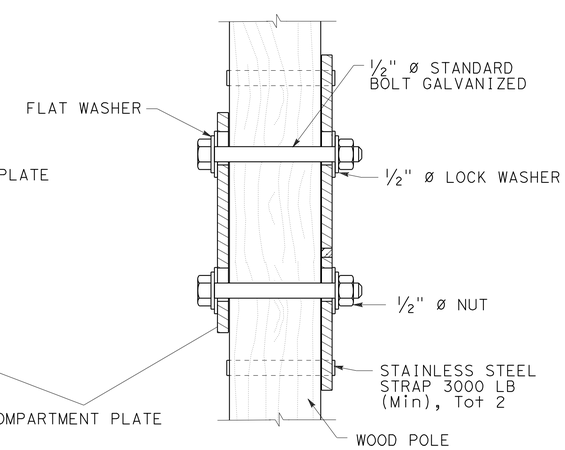

SECTION B-B

NOTE:
THE CONTRACTOR SHALL VERIFY ALL CONTROLLING FIELD DIMENSIONS BEFORE ORDERING OR FABRICATING ANY MATERIAL.

SIGNAL HEADS AND MOUNTINGS

For Details Not Shown See RSP-ES-4D Sheet

NO SCALE

BRANCH CHIEF JAMES SAGAR	DESIGN	BY T MARCHENKO	CHECKED V LOPEZ	STATE OF CALIFORNIA DEPARTMENT OF TRANSPORTATION	DIVISION OF ENGINEERING SERVICES DESIGN AND TECHNICAL SERVICES SPECIAL DESIGNS BRANCH B	BRIDGE NO. N/A
	DETAILS	BY H NGUYEN	CHECKED V LOPEZ			POST MILE 78.9/79.5
	QUANTITIES	BY	CHECKED			

SIGNAL AND LIGHTING (TEMPORARY)
WOOD POLE DETAILS

SES-3

(ENGLISH) SPECIAL DESIGNS BRANCH BORDER SHEET (REV. 7-1-09)

ORIGINAL SCALE IN INCHES FOR REDUCED PLANS 0 1 2 3

UNIT: 3619
PROJECT NUMBER & PHASE: 0300000216 CONTRACT NO.: 03-1A7341

DISREGARD PRINTS BEARING EARLIER REVISION DATES → 6-16-11

REVISION DATES | SHEET | OF

FILE => spec_des_br_prj/2011sd/04-4a07u1/03-1a7341_ses3.dgn

USERNAME => s126614 DATE PLOTTED => 14-NOV-2011 TIME PLOTTED => 10:44

DIST	COUNTY	ROUTE	POST MILES TOTAL PROJECT	SHEET No	TOTAL SHEETS
03	ED	50	78.9/79.5	54	78

REGISTERED CIVIL ENGINEER DATE

11-7-11
PLANS APPROVAL DATE

REGISTERED PROFESSIONAL ENGINEER VICTOR O LOPEZ No. C61373 Exp. 6-30-2012 CIVIL STATE OF CALIFORNIA

The State of California or its officers or agents shall not be responsible for the accuracy or completeness of electronic copies of this plan sheet.

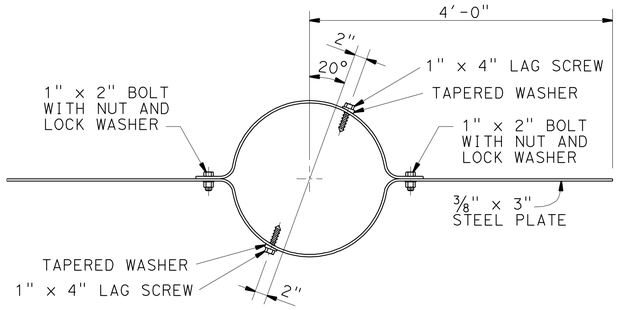

WIND ANCHOR

To be installed perpendicular to luminaire arms and 2'-0" Min below grade

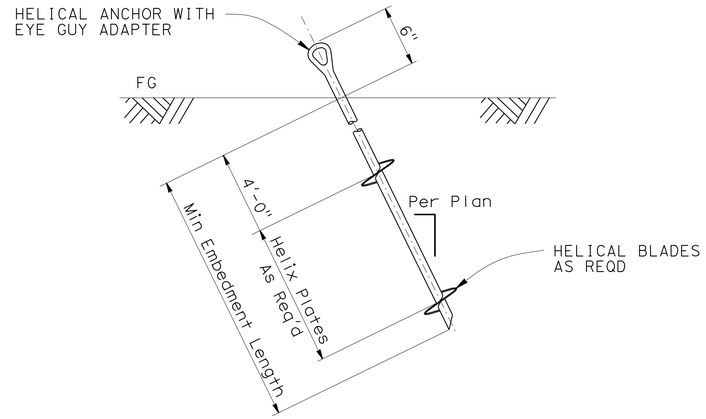

ALTERNATIVE GUY WIRE INSTALLATION DETAIL

(See Helical Anchor Specifications Table)

HELICAL ANCHOR SPECIFICATIONS

Anchor Location	Type	Helix Plate Diameter*	Allowable Min Tension Cap., "Q_a"	Embedment Length (Min)	Installation Torque (Min)**, "T"
See Plans & Note 4	Tension	16"	5700 Lbs	10'-0"	1160 Ft-LBs

SPECIFICATION NOTES:

1 During installation the torque will be continuosly monitored and recorded. If a drop in torque is recorded, the anchor must then continue to be inserted past the soft soil layer until Minimum Installation Torque is achieved.

2 Anchors and Hardware to be installed per the manufacturers specifications.

* Number of helical plates is not specified; Contractors choice.

** Adjust accordingly if required, See Note 3.

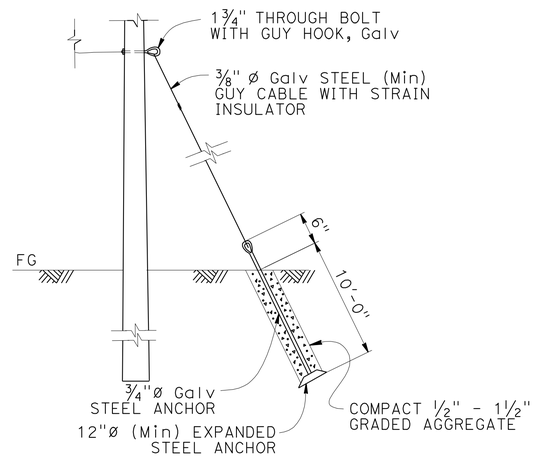

GUY WIRE INSTALLATION DETAIL

NOTES:

1. Contractor to verify soil condition, slope, and adjust anchoring to satisfy basic design requirements per Note 7 on SES-1 sheet.

2. Use of alternative Guy Wire Installation Detail requires that the soil bearing capacity be verified by the installation Contractor.

3. Installation Contractor shall determine the most appropriate value for k_t based on soil conditions and shall adjust the Min Installation Torque based on the revised k_t. A k_t value of 10 was assumed for the Min Installation Torque shown in the table.

   The Helical Installation torque Formula is $Q_u = k_t * T$ where,

   $Q_u = Q_a * FS$ = Ultimate Helical Anchor Capacity (LBs)
   FS = Factor of Safety = 2.0
   Q_a = Allowable Helical Anchor Capacity (LBs)
   k_t = Empirical Torque Factor (ft^{-1})
   T = Min Installation Torque (Ft-LBs)

4. Requests made by Helical Anchor Installation Contractor to reduce the minimum embedment length and/or Helix ℄ diameter require Engineer's approval.

5. The Contractor shall locate and mark all of the substructures and utilities. Installation of anchors underneath utilities or subsurface structures is prohibited. Horizontal clearances of anchors shall be determined by Inspector during construction.

NOTE:
THE CONTRACTOR SHALL VERIFY ALL CONTROLLING FIELD DIMENSIONS BEFORE ORDERING OR FABRICATING ANY MATERIAL.

NO SCALE

BRANCH CHIEF JAMES SAGAR	DESIGN	BY T MARCHENKO	CHECKED V LOPEZ
	DETAILS	BY H NGUYEN	CHECKED V LOPEZ
	QUANTITIES	BY	CHECKED

STATE OF CALIFORNIA
DEPARTMENT OF TRANSPORTATION

DIVISION OF ENGINEERING SERVICES
DESIGN AND TECHNICAL SERVICES
SPECIAL DESIGNS BRANCH
B

BRIDGE NO. N/A
POST MILE 78.9/79.5

SIGNAL AND LIGHTING (TEMPORARY)
WOOD POLE DETAILS

SES-4

(ENGLISH) SPECIAL DESIGNS BRANCH BORDER SHEET (REV. 7-1-09)

ORIGINAL SCALE IN INCHES FOR REDUCED PLANS 0 1 2 3

UNIT: 3619
PROJECT NUMBER & PHASE: 0300000216
CONTRACT NO.: 03-1A7341

DISREGARD PRINTS BEARING EARLIER REVISION DATES

REVISION DATES 6-16-11

SHEET OF

FILE => spec_des_br_prj/2011sd/07-260701/03-1a7341_ses4.dgn

USERNAME => s12614 DATE PLOTTED => 14-NOV-2011 TIME PLOTTED => 10:44

DIST	COUNTY	ROUTE	POST MILES TOTAL PROJECT	SHEET No	TOTAL SHEETS
03	ED	50	78.9/79.5	55	78

REGISTERED CIVIL ENGINEER DATE

11-7-11
PLANS APPROVAL DATE

REGISTERED PROFESSIONAL ENGINEER VICTOR O LOPEZ No. C61373 Exp. 6-30-2012 CIVIL STATE OF CALIFORNIA

The State of California or its officers or agents shall not be responsible for the accuracy or completeness of electronic copies of this plan sheet.

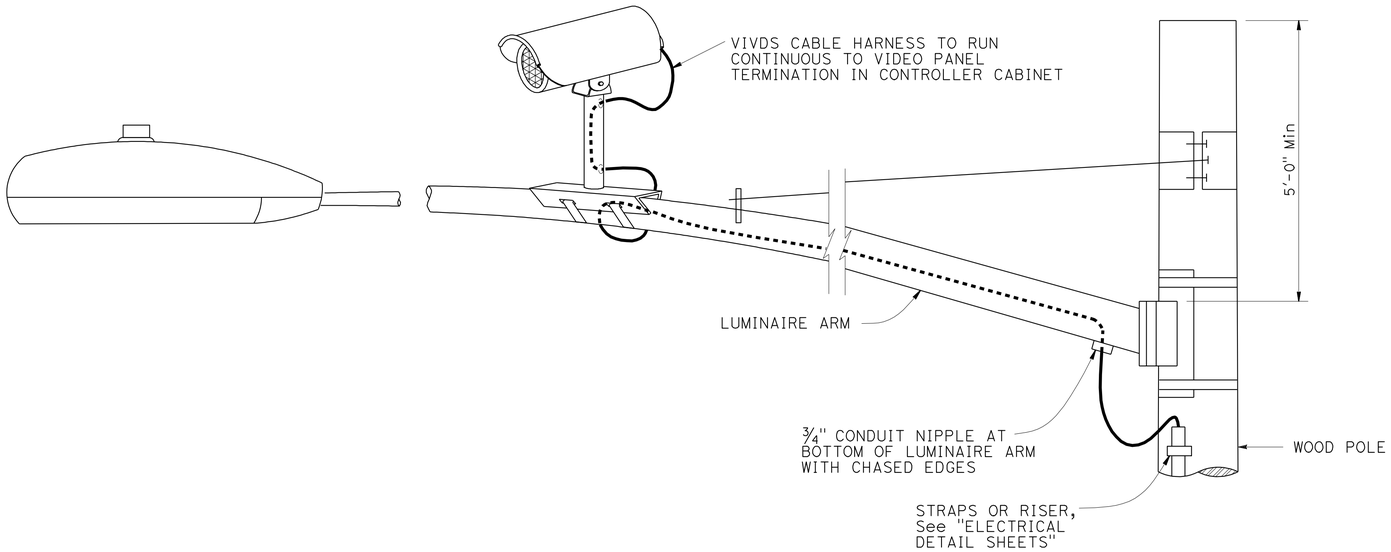

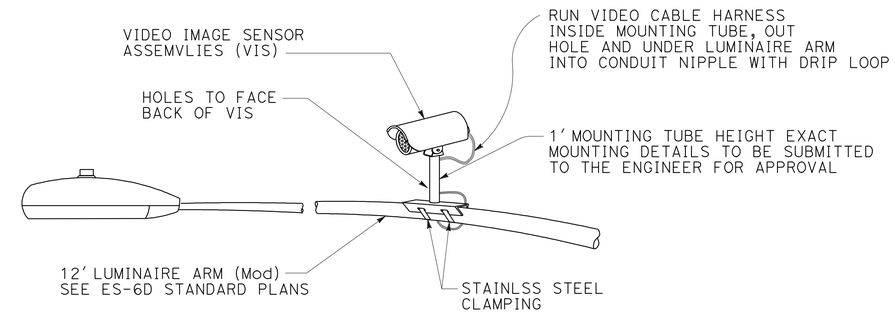

CAMERA MOUNTING DETAILS

NO SCALE

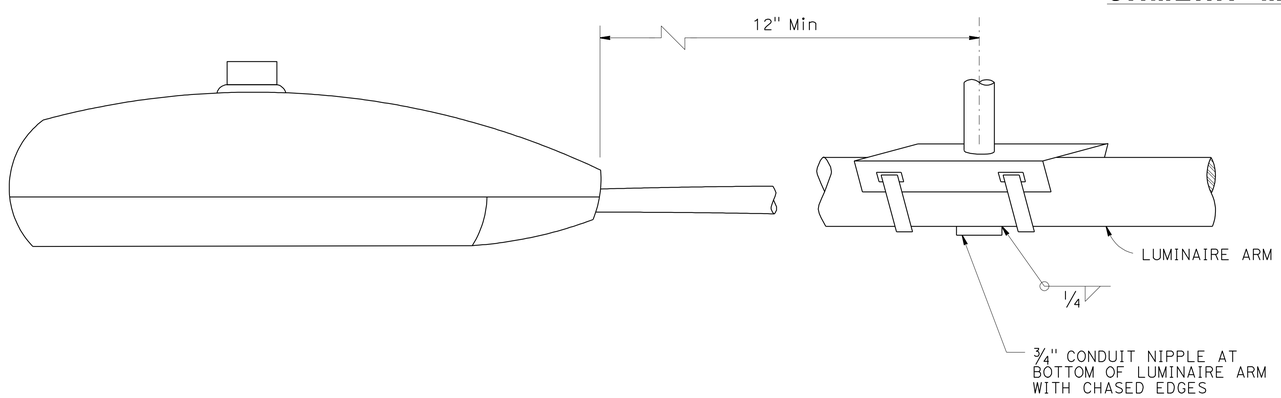

DETAIL A

NO SCALE

NOTES:

1. All metallic conduits, bolts, straps, and miscellaneous hardware shall be galvanized.
2. Elements (total VIS assembly) shall have a maximum weight of 10 lbs. and amaximum effective pressure area of 1 square foot.
3. Maximum of 1 element per arm.
4. This detail applies only for steel masts on newly installed poles designatedaccording to Caltrans Standard Plans.
5. Refer to SES sheets for arm mounting details.

NOTE:
THE CONTRACTOR SHALL VERIFY ALL CONTROLLING FIELD DIMENSIONS BEFORE ORDERING OR FABRICATING ANY MATERIAL.

BRANCH CHIEF JAMES SAGAR	DESIGN	BY T MARCHENKO	CHECKED V LOPEZ
	DETAILS	BY H NGUYEN	CHECKED V LOPEZ
	QUANTITIES	BY	CHECKED

STATE OF CALIFORNIA
DEPARTMENT OF TRANSPORTATION

DIVISION OF ENGINEERING SERVICES
DESIGN AND TECHNICAL SERVICES
SPECIAL DESIGNS BRANCH
B

BRIDGE NO. N/A
POST MILE 78.9/79.5

SIGNAL AND LIGHTING (TEMPORARY)
CAMERA MOUNTING DETAILS

SES-5

(ENGLISH) SPECIAL DESIGNS BRANCH BORDER SHEET (REV. 7-1-09)

ORIGINAL SCALE IN INCHES FOR REDUCED PLANS 0 1 2 3

UNIT: 3619
PROJECT NUMBER & PHASE: 0300000216
CONTRACT NO.: 03-1A7341

DISREGARD PRINTS BEARING EARLIER REVISION DATES

REVISION DATES 6-16-11 SHEET OF

FILE => spec_des_br_prj/2011sd/03-1a7341/03-1a7341_ses5.dgn

USERNAME => s121614 DATE PLOTTED => 14-NOV-2011 TIME PLOTTED => 10:45

DIST	COUNTY	ROUTE	POST MILES TOTAL PROJECT	SHEET NO.	TOTAL SHEETS
03	ED	50	78.9/79.5	56	78

Donald E. Howe
REGISTERED CIVIL ENGINEER

June 6, 2008
PLANS APPROVAL DATE

REGISTERED PROFESSIONAL ENGINEER
Donald E. Howe
No. C46402
Exp. 3-31-09
CIVIL
STATE OF CALIFORNIA

The State of California or its officers or agents shall not be responsible for the accuracy or completeness of electronic copies of this plan sheet.

To accompany plans dated 11-7-11

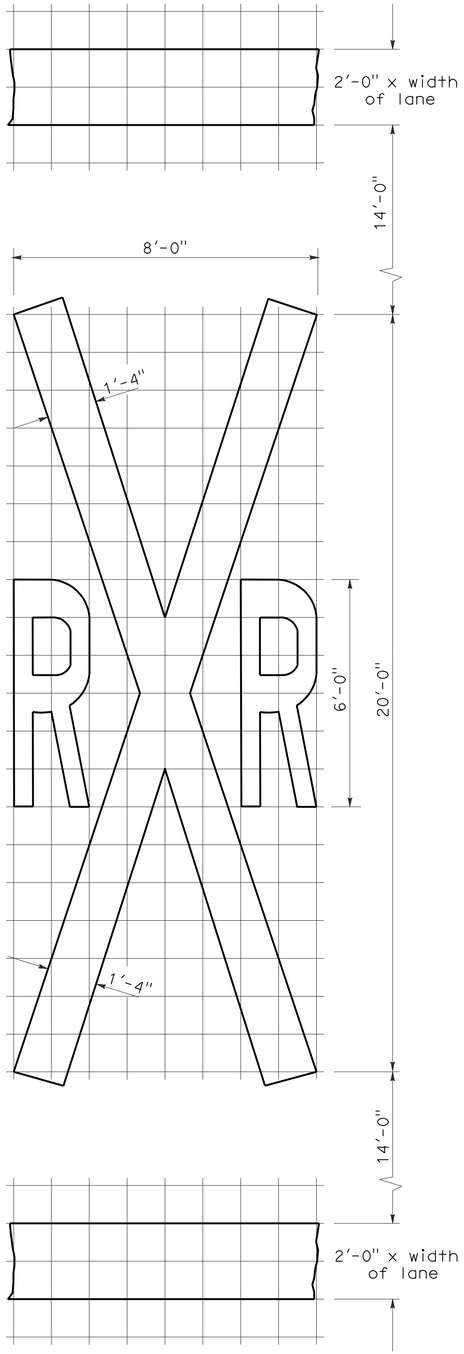

RAILROAD CROSSING SYMBOL

✳70 sq ft DOES NOT INCLUDE THE 2'-0" x VARIABLE WIDTH TRANSVERSE LINES.

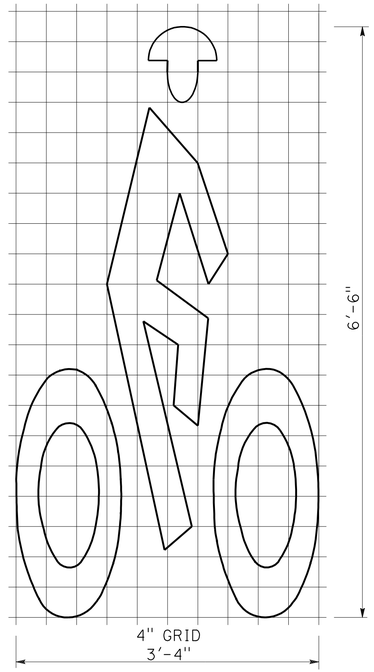

BIKE LANE SYMBOL

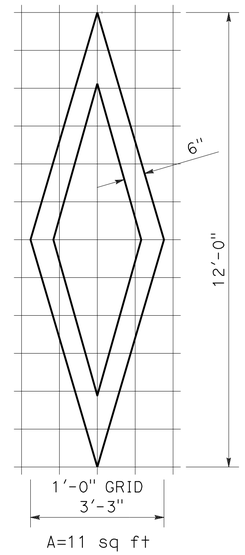

DIAMOND SYMBOL

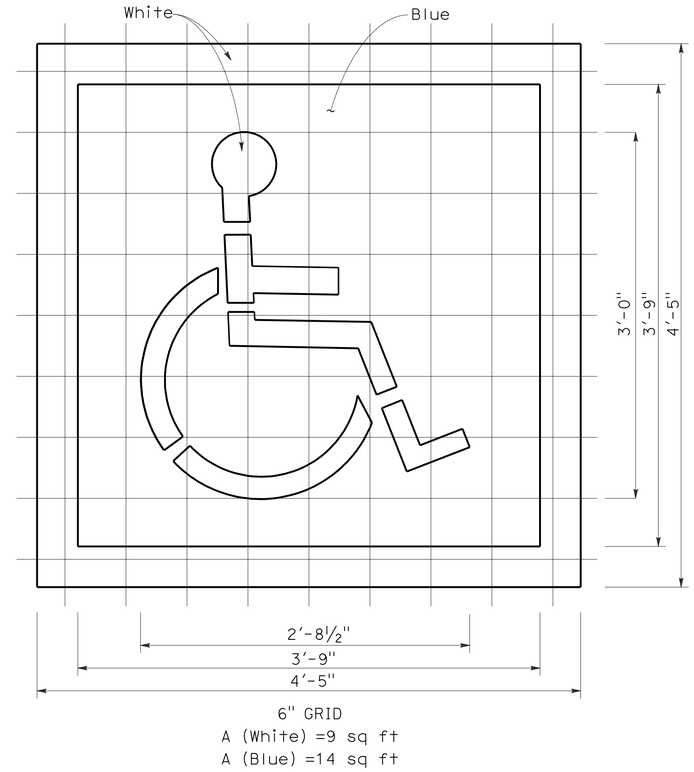

INTERNATIONAL SYMBOL OF ACCESSIBILITY MARKING

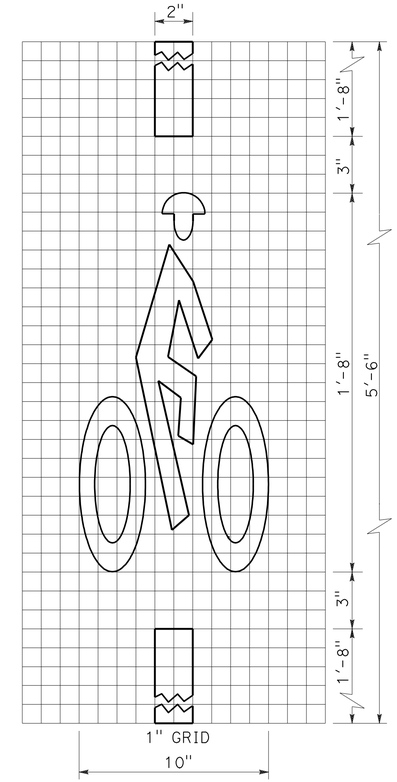

BICYCLE LOOP DETECTOR SYMBOL

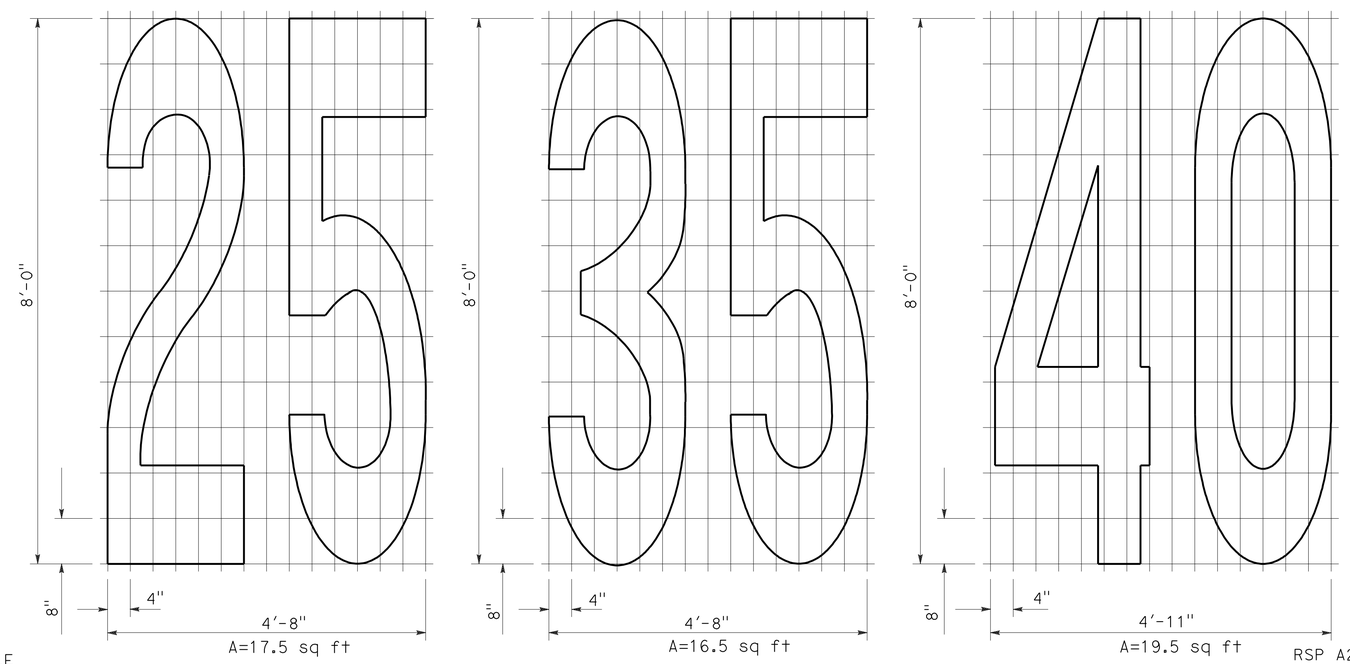

NUMERALS

NOTE:

1. Minor variations in dimensions may be accepted by the Engineer.

STATE OF CALIFORNIA
DEPARTMENT OF TRANSPORTATION

PAVEMENT MARKINGS SYMBOLS AND NUMERALS

NO SCALE

RSP A24C DATED JUNE 6, 2008 SUPERSEDES STANDARD PLAN A24C DATED MAY 1, 2006 - PAGE 11 OF THE STANDARD PLANS BOOK DATED MAY 2006.

REVISED STANDARD PLAN RSP A24C

2006 REVISED STANDARD PLAN RSP A24C

5-27-08

DIST	COUNTY	ROUTE	POST MILES TOTAL PROJECT	SHEET NO.	TOTAL SHEETS
03	ED	50	78.9/79.5	57	78

REGISTERED CIVIL ENGINEER

November 17, 2006
PLANS APPROVAL DATE

REGISTERED PROFESSIONAL ENGINEER Dallas Forester No. C37765 Exp. 12-31-06 CIVIL STATE OF CALIFORNIA

The State of California or its officers or agents shall not be responsible for the accuracy or completeness of electronic copies of this plan sheet.

To accompany plans dated 11-7-11

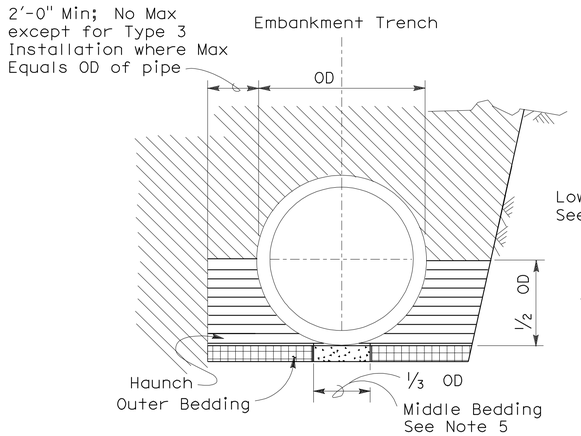

BACKFILL

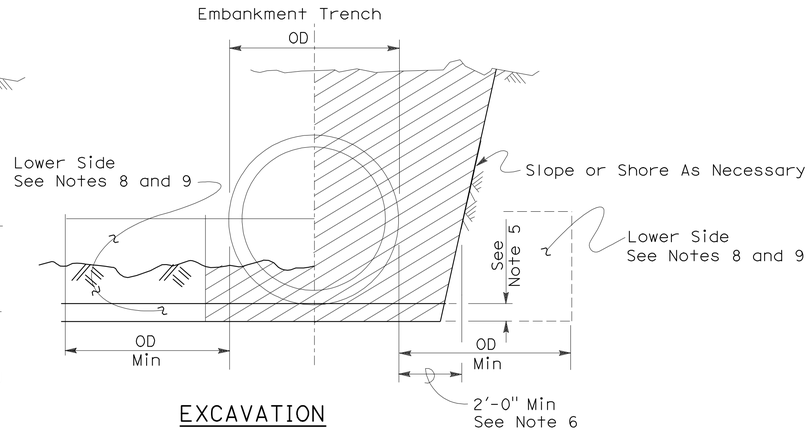

EXCAVATION

Roadway Embankment

Structure Backfill (Culvert) See Note 6

Structure Backfill (Culvert) See Note 6

Loose Backfill

Excavation Structure (Culvert)

TYPE 1 INSTALLATION:

The haunch and outer bedding shall be compacted to a minimum 90 percent relative compaction. In addition, the minimum sand equivalent in these areas shall be 30 and the maximum percentage passing the 75 μm sieve size shall be 12.

TYPE 2 INSTALLATION:

The haunch and outer bedding shall be compacted to a minimum 90 percent relative compaction. In addition, the minimum sand equivalent in these areas shall be 25.

TYPE 3 INSTALLATION:

The haunch and outer bedding shall be compacted to a minimum 85 percent relative compaction. 90 percent relative compaction will be required where the fill over the pipe is less than 4'-0" or 1/2 OD.

NOTES:

1. Unless otherwise shown on the plans or specified in the special provision, the Contractor shall have the option of selecting the class of RCP and the type of installation to be used, provided the height of cover does not exceed the value shown for the RCP selected.
   Example: 24" RCP culvert with maximum cover of 19'-0" the options are:
   a) Class III or stronger with Installation Type 1.
   b) Class III Special or stronger with Installation Type 2.
   c) Class IV Special or stronger with Installation Type 3.
   Cover is defined as the maximum vertical distance from top of the pipe to finished grade within the length of any given culvert.
2. The class of RCP and Installation Type selected shall be the same throughout the length of any given culvert.
3. The "length of any culvert" is defined as the culvert between:
   a) Successive drainage structure (inlets, junction boxes, headwalls, etc.).
   b) A drainage structure and the inlet or outlet end of the culvert.
   c) The inlet and outlet end of the culvert when there are no intervening drainage structures.
4. Oval and arch shaped RCP shall not be used.
5. 1/25 OD Min, not less than 3".
6. Slurry cement backfill may be substituted for backfill in the outer bedding and haunch areas. If slurry is used the outer and middle beddings shall be omitted. Prior to installation the soil under the middle 1/3 of the outside diameter of the pipe shall be softened by scarifying or other means to a minimum depth of 1/25 OD, but not less than 3". Where slurry cement backfill is used clear distance to trench wall may be reduced as set forth in Section 19-3.062 of the Standard Specifications.
7. Backfill shall be placed full width of excavation except where dimensions are shown for backfill width or thickness. Dimensions shown are minimums.
8. Lower side shall be suitable material as determined by the Engineer. Otherwise it shall be considered unsuitable as set forth in Section 19-2.02 of the Standard Specifications. See Note 9.
9. Where the pipe is placed in a trench, if the trench walls are sloped at 5 vertical to 1 horizontal or steeper for at least 90 percent of the trench height or up to not less than 12" from the grading plane, the firmness of the soil in the lower side need not be considered.
10. Non-reinforced precast concrete pipe sizes 3'-0" or smaller may be placed under installation Types 1, 2 or 3.

INSTALLATION TYPE 1

MINIMUM CLASS AND D-LOAD	COVER	
	108" Dia AND SMALLER	OVER 108" Dia
Class II 1000D	14.9'	12.9'
Class III 1350D	15.0' - 20.9'	13.0' - 18.9'
Class III Special 1700D	21.0' - 26.9'	19.0' - 24.9'
Class IV 2000D	27.0' - 31.9'	25.0' - 29.9'
Class IV Special 2500D	32.0' - 40.9'	30.0' - 38.9'
Class V 3000D	41.0' - 49.9'	39.0' - 46.9'
Class V Special 3600D	50.0' - 59.0'	47.0' - 58.0'

INSTALLATION TYPE 2

MINIMUM CLASS AND D-LOAD	COVER
Class II 1000D	9.9'
Class III 1350D	10.0'- 14.9'
Class III Special 1700D	15.0' - 19.9'
Class IV 2000D	20.0' - 24.9'
Class IV Special 2500D	25.0' - 31.9'
Class V 3000D	32.0' - 38.9'
Class V Special 3600D	39.0' - 47.0'

INSTALLATION TYPE 3

MINIMUM CLASS AND D-LOAD	COVER	
	48" Dia AND SMALLER	OVER 48" Dia
Class II 1000D	7.9'	5.9'
Class III 1350D	8.0' - 10.9'	6.0' - 8.9'
Class III Special 1700D	11.0' - 14.9'	9.0' - 12.9'
Class IV 2000D	15.0' - 17.9'	13.0' - 15.9'
Class IV Special 2500D	18.0' - 21.9'	16.0' - 19.9'
Class V 3000D	22.0' - 26.9'	20.0' - 24.9'
Class V Special 3600D	30.0' - 33.0'	25.0' - 31.0'

STATE OF CALIFORNIA
DEPARTMENT OF TRANSPORTATION

EXCAVATION AND BACKFILL CONCRETE PIPE CULVERTS

NO SCALE

RSP A62DA DATED NOVEMBER 17, 2006 SUPERSEDES STANDARD PLAN A62DA DATED MAY 1, 2006 - PAGE 20 OF THE STANDARD PLANS BOOK DATED MAY 2006.

REVISED STANDARD PLAN RSP A62DA

2006 REVISED STANDARD PLAN RSP A62DA

10-26-06

DIST	COUNTY	ROUTE	POST MILES TOTAL PROJECT	SHEET NO.	TOTAL SHEETS
03	ED	50	78.9/79.5	58	78

REGISTERED CIVIL ENGINEER

November 17, 2006
PLANS APPROVAL DATE

REGISTERED PROFESSIONAL ENGINEER Michael Janzen No. 44788 Exp. 03-31-08 CIVIL STATE OF CALIFORNIA

The State of California or its officers or agents shall not be responsible for the accuracy or completeness of electronic copies of this plan sheet.

To accompany plans dated 11-7-11

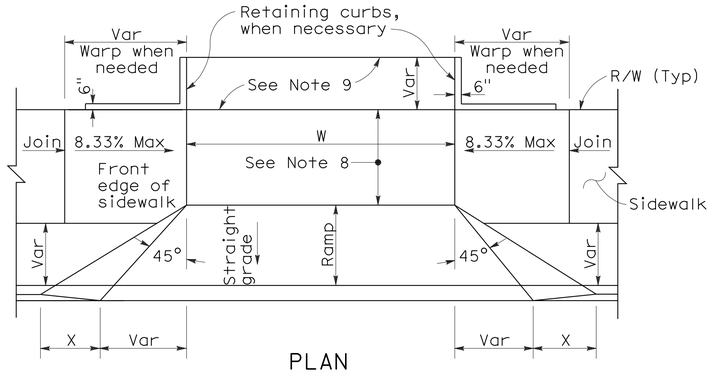

PLAN

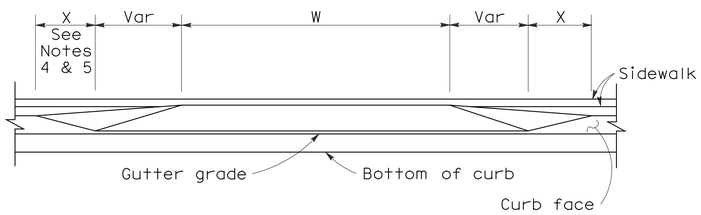

ELEVATION

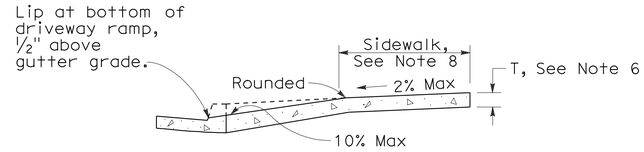

CASE A

Typical driveway, sidewalk not depressed

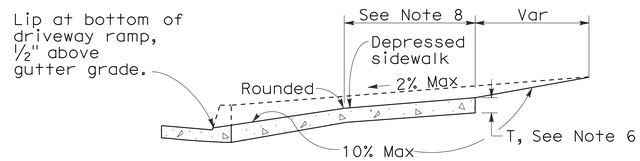

CASE B

Driveway with depressed sidewalk

SECTIONS

DRIVEWAYS

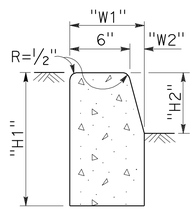

TYPE A1 CURBS

See Table A

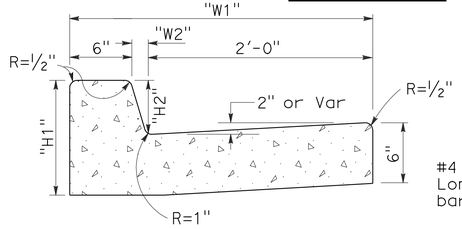

TYPE A2 CURBS

See Table A

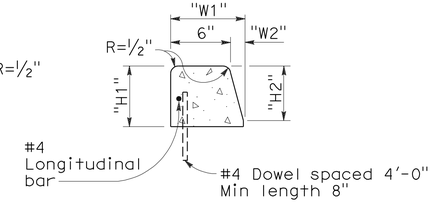

TYPE A3 CURBS

Superimposed on existing pavement
See Table A

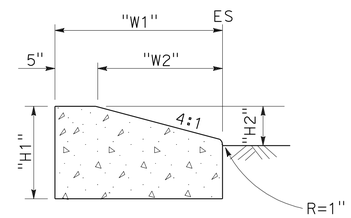

TYPE D CURBS

See Table A

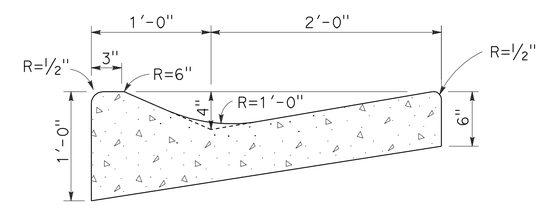

TYPE E CURB

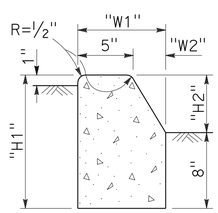

TYPE B1 CURBS

See Table A

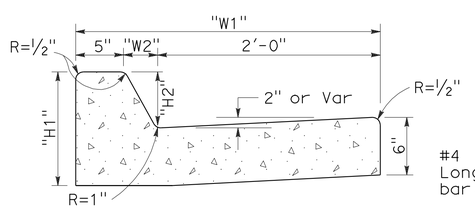

TYPE B2 CURBS

See Table A

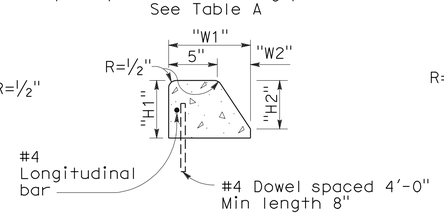

TYPE B3 CURBS

Superimposed on existing pavement
See Table A

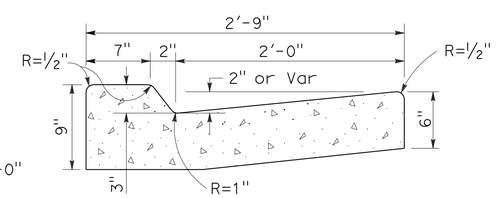

TYPE B4 CURBS

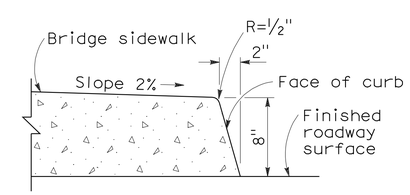

TYPE H CURB

On Bridges

CURBS

CURB QUANTITIES

TYPE	CUBIC YARDS PER LINEAR FOOT
A1-6	0.02585
A1-8	0.03084
A2-6	0.05903
A2-8	0.06379
A3-6	0.01036
A3-8	0.01435
B1-4	0.02185
B1-6	0.02930
B2-4	0.05515
B2-6	0.06171
B3-4	0.00641
B3-6	0.01074
B4	0.05709
D-4	0.04083
D-6	0.06804
E	0.06661

TABLE A

CURB TYPE	DIMENSIONS "H1"	"H2"	"W1"	"W2"
A1-6	1'-2"	6"	7½"	1½"
A1-8	1'-4"	8"	8"	2"
A2-6	1'-0"	6"	2'-7½"	1½"
A2-8	1'-2"	8"	2'-8"	2"
A3-6	6"	5"	7¼"	1¼"
A3-8	8"	7"	7¾"	1¾"
B1-4	1'-0"	4"	7½"	2½"
B1-6	1'-2"	6"	9"	4"
B2-4	10"	4"	2'-7½"	2½"
B2-6	1'-0"	6"	2'-9"	4"
B3-4	4"	3"	7"	2"
B3-6	6"	5"	8½"	3½"
D-4	10"	4"	1'-6"	1'-1"
D-6	1'-0"	6"	2'-2"	1'-8"

NOTES:

1. Case A driveway section typically applies.
2. Use Case B driveway section when ramp slopes would exceed 10% in Case A.
3. Use Case B driveway section when sidewalk cross slope would exceed 2% in Case A.
4. X=3'-0" except for curb heights over 10" where 4:1 slopes shall be used on curb slope.
5. X is a variable when sidewalk is located where wheelchairs may traverse the surface. Slopes shall not exceed 8.33%.
6. Sidewalk and ramp thickness "T" at driveway shall be 4" for residental and 6" for commercial.
7. Difference in slope of the driveway ramp and the slope of a line between the gutter and a point on the roadway 5'-0" from gutter line shall not exceed 15%. Reduce driveway ramp slope, not gutter slope, where required.
8. Minimum width of clear passageway for sidewalk shall be 4'-0".
9. Retaining curbs and acquisition of construction easement may be necessary for narrow sidewalks or curb heights in excess of 6".
10. Across the pedestrian route at curb ramp locations, the gutter pan slope shall not exceed 1" of depth for each 2'-0" of width.

STATE OF CALIFORNIA
DEPARTMENT OF TRANSPORTATION

CURBS AND DRIVEWAYS

NO SCALE

RSP A87A DATED NOVEMBER 17, 2006 SUPERSEDES STANDARD PLAN A87A DATED MAY 1, 2006 - PAGE 113 OF THE STANDARD PLANS BOOK DATED MAY 2006.

REVISED STANDARD PLAN RSP A87A

2006 REVISED STANDARD PLAN RSP A87A

10-25-06

DIST	COUNTY	ROUTE	POST MILES TOTAL PROJECT	SHEET NO.	TOTAL SHEETS
03	ED	50	78.9/79.5	59	78

REGISTERED CIVIL ENGINEER

September 1, 2006
PLANS APPROVAL DATE

REGISTERED PROFESSIONAL ENGINEER
Hector David Cordova
No. C41957
Exp. 3-31-08
CIVIL
STATE OF CALIFORNIA

The State of California or its officers or agents shall not be responsible for the accuracy or completeness of electronic copies of this plan sheet.

To accompany plans dated 11-7-11

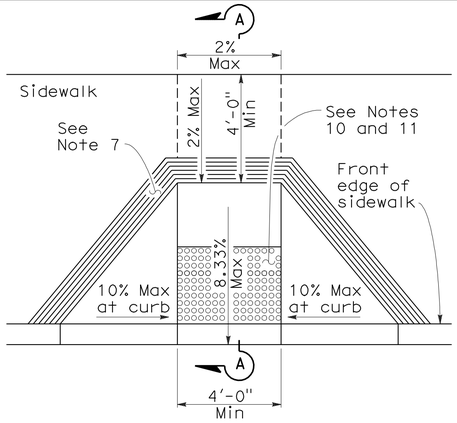

CASE A

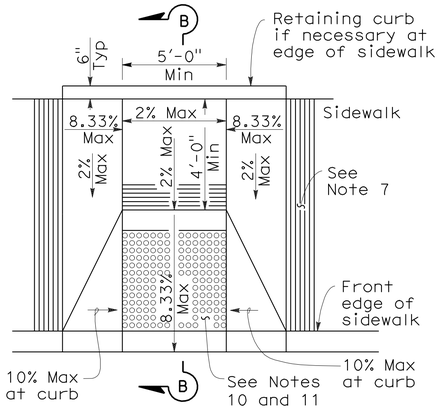

CASE B

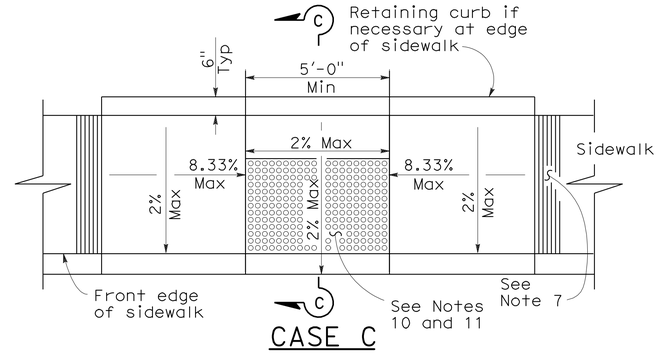

CASE C

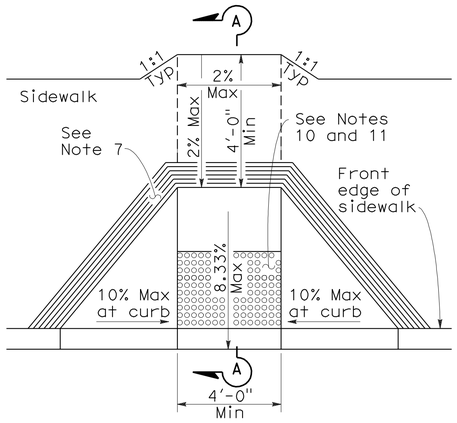

CASE D

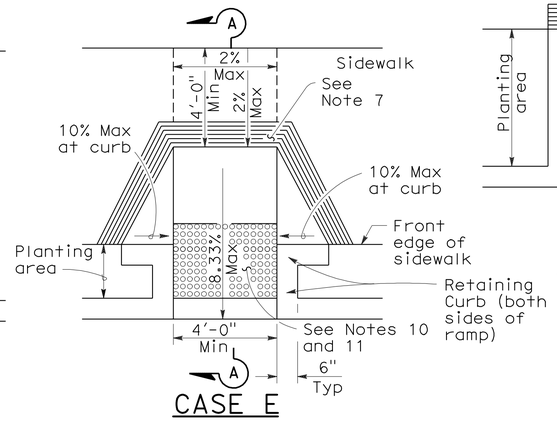

CASE E

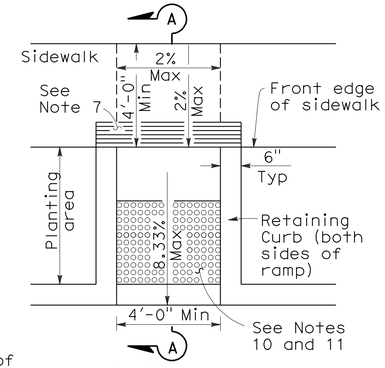

CASE F

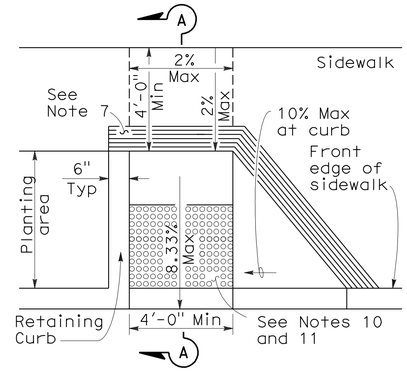

CASE G
See Note 4

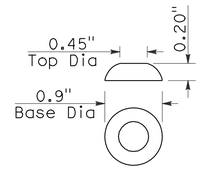

RAISED TRUNCATED DOME

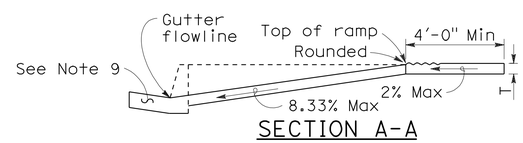

SECTION A-A

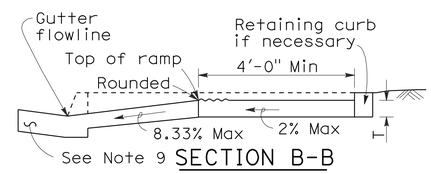

SECTION B-B
Depress entire sidewalk as required

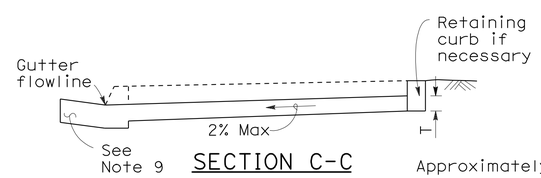

SECTION C-C

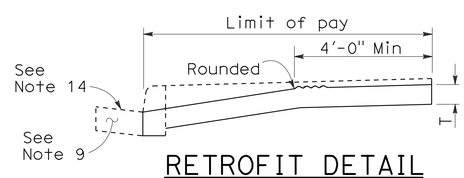

RETROFIT DETAIL
Existing curb and sidewalk

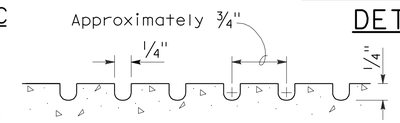

GROOVING DETAIL

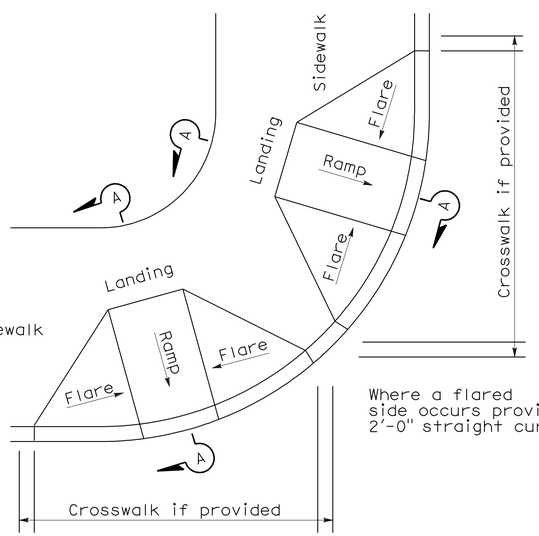

DETAIL A
TYPICAL TWO-RAMP CORNER INSTALLATION
See Note 1

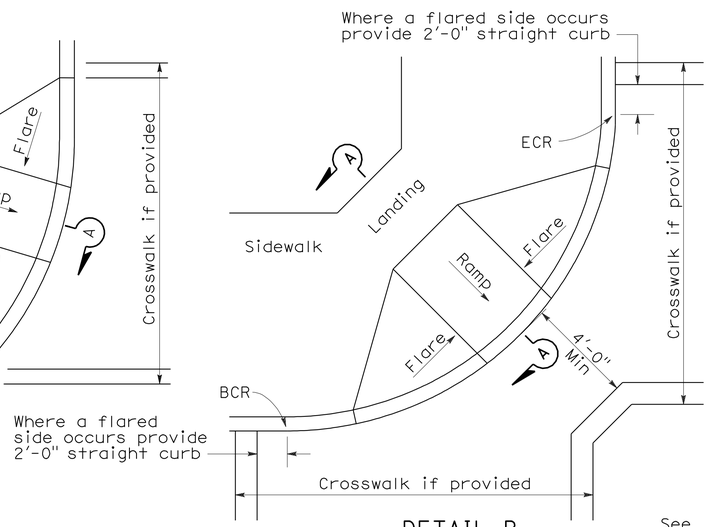

DETAIL B
TYPICAL ONE-RAMP CORNER INSTALLATION
See Notes 1 and 3

NOTES:

1. As site conditions dictate, Case A through Case G curb ramps may be used for corner installations similar to those shown in Detail A and Detail B. The case of curb ramps used in Detail A do not have to be the same. Case A through Case G curb ramps also may be used at mid block locations, as site conditions dictate.
2. If distance from curb to back of sidewalk is too short to accommodate ramp and 4'-0" platform (landing) as shown in Case A, the sidewalk may be depressed longitudinally as in Case B, or C or may be widened as in Case D.
3. When ramp is located in center of curb return, crosswalk configuration must be similar to that shown for Detail B.
4. As site conditions dictate, the retaining curb side and the flared side of the Case G ramp shall be constructed in reversed position.
5. If located on a curve, the sides of the ramp need not be parallel, but the minimum width of the ramp shall be 4'-0".
6. Side slope of ramp flares vary uniformly from a maximum of 10% at curb to conform with longitudinal sidewalk slope adjacent to top of the ramp, except in Case C and Case F.
7. The curb ramp shall be outlined, as shown, with a 1'-0" wide border with 1/4" grooves approximately 3/4" on center. See grooving detail.
8. Transitions from ramps and landing to walks, gutters or streets shall be flush and free of abrupt changes.
9. Maximum slopes of adjoining gutters, the road surface immediately adjacent to the curb ramp or accessible route shall not exceed 5 percent within 4'-0" of the top and bottom of the curb ramp.
10. Curb ramps shall have a detectable warning surface that extends the full width and 3'-0" depth of the ramp. Detectable Warning Surfaces shall conform to the details on this plan and the requirements in the Special Provisions.
11. The edge of the detectable warning surface nearest the street shall be between 6" and 8" from the gutter flowline.
12. Sidewalk and ramp thickness, "T", shall be 3 1/2" minimum.
13. Utility pull boxes, manholes, vaults and all other utility facilities within the boundaries of the curb ramp will be relocated or adjusted to grade by the owner prior to, or in conjunction with, curb ramp construction.
14. For retrofit conditions, removal and replacement of curb apron will be at the Contractor's option, unless otherwise shown on project plans.

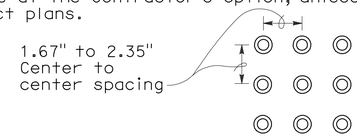

RAISED TRUNCATED DOME PATTERN (IN-LINE)
DETECTABLE WARNING SURFACE
See Note 10

STATE OF CALIFORNIA
DEPARTMENT OF TRANSPORTATION

CURB RAMP DETAILS

NO SCALE

RSP A88A DATED SEPTEMBER 1, 2006 SUPERSEDES STANDARD PLAN A88A DATED MAY 1, 2006 - PAGE 115 OF THE STANDARD PLANS BOOK DATED MAY 2006.

REVISED STANDARD PLAN RSP A88A

2006 REVISED STANDARD PLAN RSP A88A

8-3-06

DIST	COUNTY	ROUTE	POST MILES TOTAL PROJECT	SHEET NO.	TOTAL SHEETS
03	ED	50	78.9/79.5	60	78

Robert B Schott
LICENSED LANDSCAPE ARCHITECT

April 3, 2009
PLANS APPROVAL DATE

The State of California or its officers or agents shall not be responsible for the accuracy or completeness of electronic copies of this plan sheet.

LICENSED LANDSCAPE ARCHITECT — Robert B. Schott — 3625 — Signature — 11-30-10 Renewal Date — 2-25-09 Date — STATE OF CALIFORNIA

To accompany plans dated 11-7-11

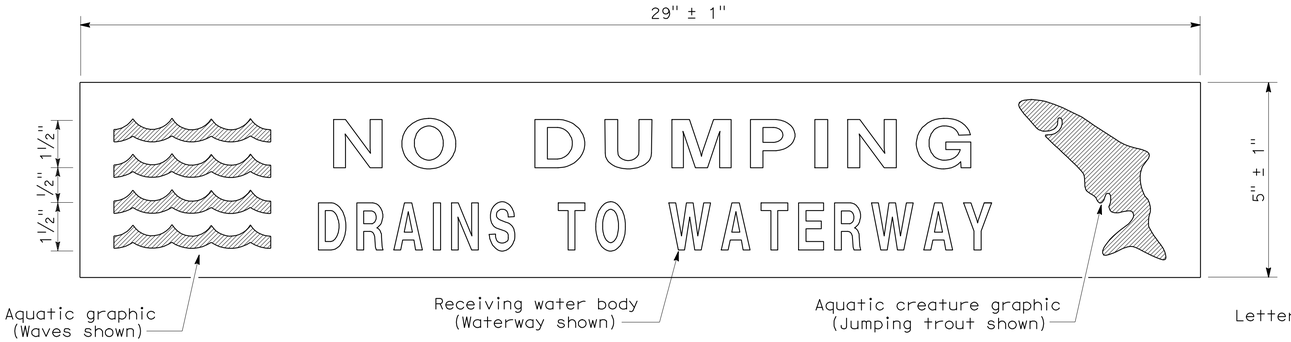

PLAN
DRAINAGE INLET MARKER
(PREFABRICATED THERMOPLASTIC)

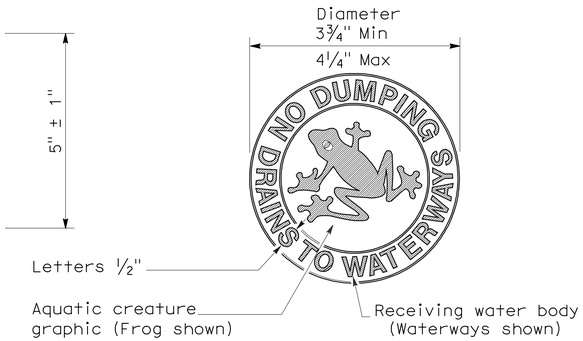

PLAN
DRAINAGE INLET MARKER
(MEDALLION)

PLAN
DRAINAGE INLET MARKER
(STAMPED CONCRETE IMPRINT)

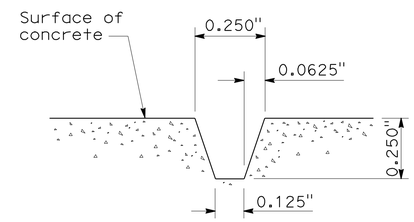

SECTION A-A
STAMPED CONCRETE
IMPRINT DETAIL

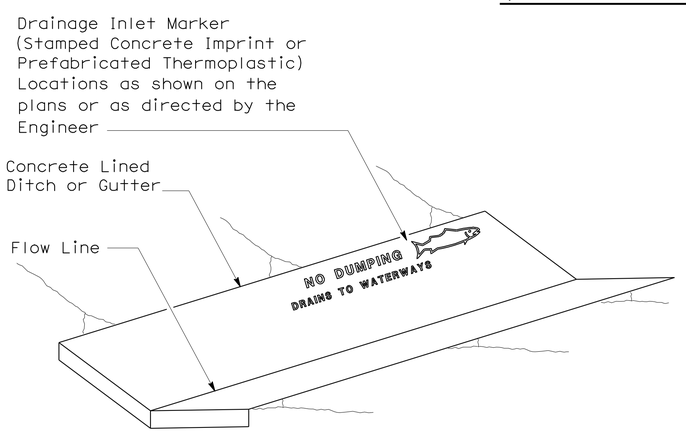

PERSPECTIVE
DRAINAGE INLET MARKER ON
CONCRETE LINED DITCH

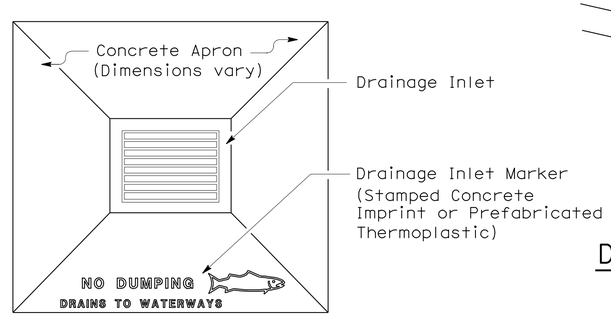

PLAN
DRAINAGE INLET MARKER ON
DRAINAGE INLET APRON

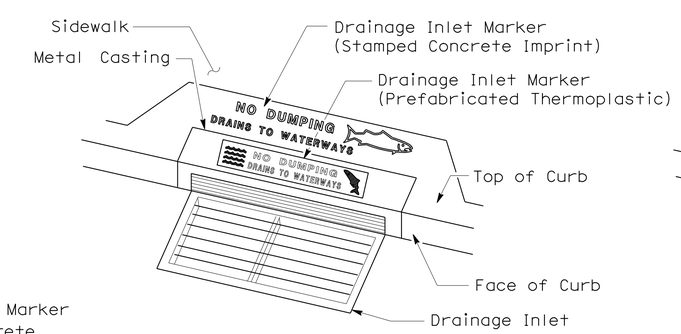

PERSPECTIVE
DRAINAGE INLET MARKER ON
DRAINAGE INLET

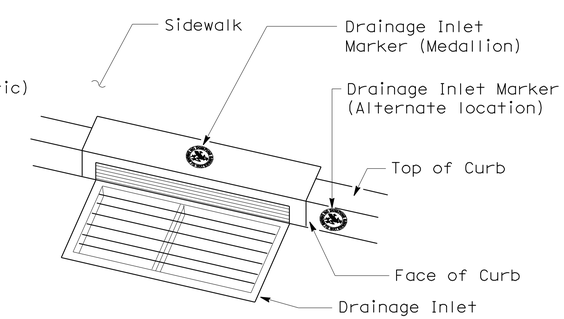

PERSPECTIVE
DRAINAGE INLET MARKER (MEDALLION)
ON DRAINAGE INLET

STATE OF CALIFORNIA
DEPARTMENT OF TRANSPORTATION

DRAINAGE INLET MARKERS

NO SCALE

NSP D71 DATED APRIL 3, 2009 SUPPLEMENTS
THE STANDARD PLANS BOOK DATED MAY 2006.

NEW STANDARD PLAN NSP D71

2006 NEW STANDARD PLAN NSP D71

DIST	COUNTY	ROUTE	POST MILES TOTAL PROJECT	SHEET NO.	TOTAL SHEETS
03	ED	50	78.9/79.5	61	78

REGISTERED CIVIL ENGINEER

June 15, 2007
PLANS APPROVAL DATE

REGISTERED PROFESSIONAL ENGINEER Glenn DeCou No. C34547 Exp. 9-30-07 CIVIL STATE OF CALIFORNIA

The State of California or its officers or agents shall not be responsible for the accuracy or completeness of electronic copies of this plan sheet.

To accompany plans dated 11-7-11

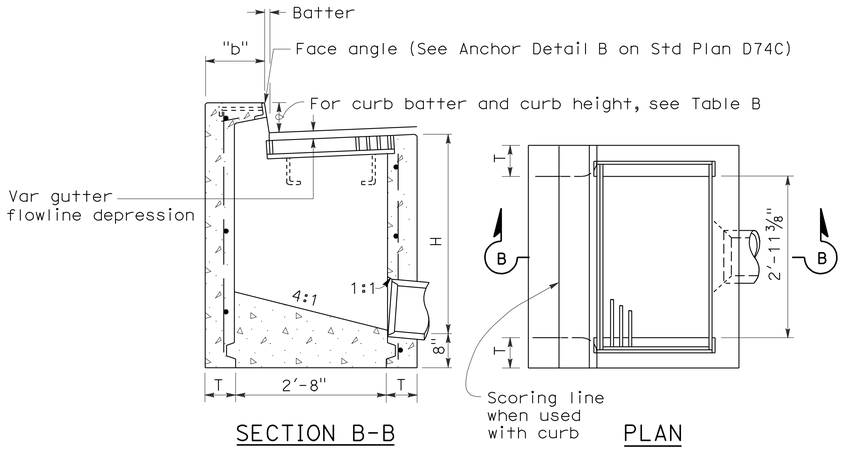

SECTION B-B PLAN

TYPE GO

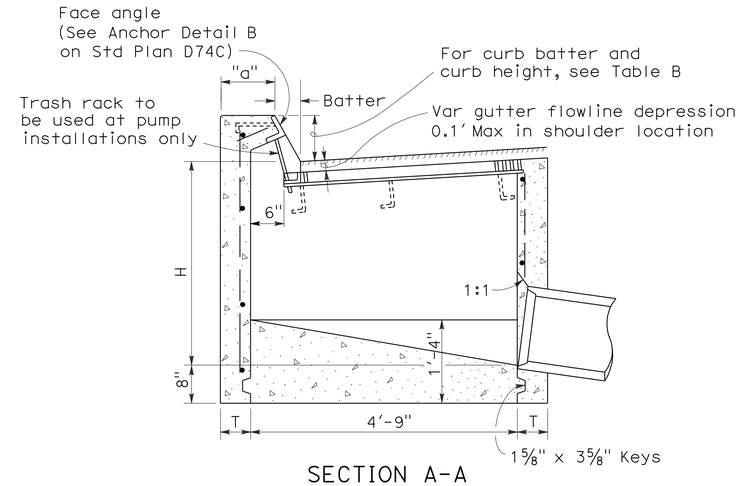

SECTION A-A

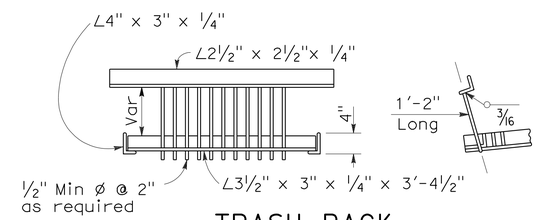

TRASH RACK

(For use with pump installation)

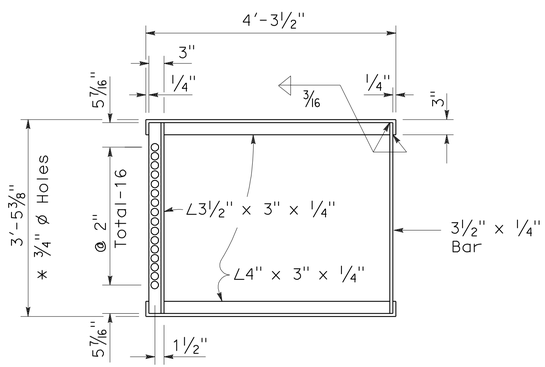

* 3/4" ø Holes required only with trash rack

GRATE FRAME FOR TYPE GDO INLET

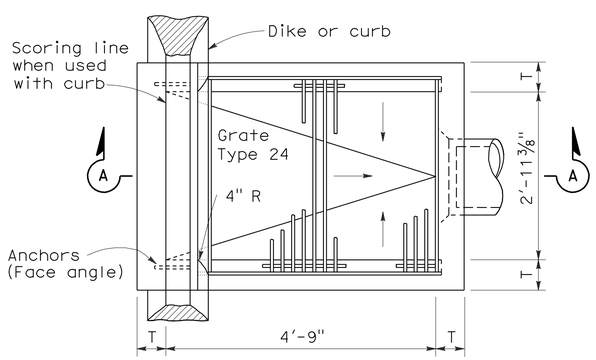

PLAN

TYPE GDO

TABLE A

CONCRETE QUANTITIES				
TYPE	H=3'-0" TO 8'-0" (T=6")		H=8'-1" TO 20'-0" (T=8")	
	H=3'-0" (CY)	ADDITIONAL PCC PER FOOT (CY)	H=8'-1" (CY)	ADDITIONAL PCC PER FOOT (CY)
GO	1.24	0.245	3.39	0.346
GDO	1.62	0.322	4.36	0.446

Table based on 8" floor slab, no deduction for pipe openings, and curb type giving highest quantity of concrete. No deductions or adjustments are to be made to these quantities because of pipe openings, different floor alternatives or different curb type.

TABLE B

CURB TYPE	NORMAL CURB HEIGHT	CURB BATTER	"a" DIMENSION	"b" DIMENSION
A1-6	6"	1 1/2"	T+7 1/2"	T+6 1/2"
A1-8	8"	2"	T+7"	T+6"
B1-6	6"	4"	T+5"	T+4"
Type A Dike	6"	3"	T+6"	T+5"

NOTES:

1. "H" is the difference in elevation between the outlet pipe flow line and the normal gutter grade line undepressed.
2. For "T" wall thickness, see Table A below.
3. Wall reinforcing not required when "H" is 8'-0" or less and the unsupported width or length is 7'-0" or less. Walls exceeding these limits shall be reinforced with #4 @ 18"± centers placed 1 1/2" clear to inside of box unless otherwise shown.
4. Inlet bottom reinforcing not required. See Standard Plan D74C for alternative reinforced bottom.
5. Steps - None required where "H" is less than 2'-6" Where "H" is 2'-6" or more, install steps with lowest rung 1'-0" above the floor and highest rung not more than 6" below top of inlet. The distance between steps shall not exceed 1'-0" and shall be uniform throughout the length of the wall. Place steps in the wall without an opening. Step inserts may be substituted for the bar steps. Step Inserts shall comply with State Industrial Safety requirements. See Standard Plan D74C for step details.
6. When shown on the project plans, place a 3/4" plain round protection bar horizontally across the length of the opening and bend back 4" into the inlet wall on each side.
7. Pipe(s) can be placed in any wall.
8. Curb section shall match adjacent curb.
9. Basin floors shall have wood trowel finish and shall slope toward the outlet pipe as shown.
10. Galvanizing - See Standard Specifications or Special Provisions.
11. See Standard Plan D77A and D77B for grate and frame details and weights of miscellaneous iron and Steel.
12. See Standard Plan D78A for gutter depression details.
13. Full penetration butt welds may be substituted for the fillet welds on all anchors.
14. Standard square, hexagon, round or equivalent headed anchors may be substituted for the right angle hooks on the anchors shown on this plan.
15. Cast-in-place or precast alternative is optional with contractor. See Standard Specifications.
16. Cast-in-place inlets to be formed around all pipes/stubs intersecing the inlet and concrete poured in one continuous operation. Precast inlets shall have mortared pipe connections conforming to details for Type GCP inlets on Standard Plan D75B. See Standard Specifications for mortar composition.

STATE OF CALIFORNIA
DEPARTMENT OF TRANSPORTATION

DRAINAGE INLETS

NO SCALE

RSP D74B DATED JUNE 15, 2007 SUPERSEDES STANDARD PLAN D74B DATED MAY 1, 2006 - PAGE 150 OF THE STANDARD PLANS BOOK DATED MAY 2006.

REVISED STANDARD PLAN RSP D74B

2006 REVISED STANDARD PLAN RSP D74B

4-16-07

DIST	COUNTY	ROUTE	POST MILES TOTAL PROJECT	SHEET NO.	TOTAL SHEETS
03	ED	50	78.9/79.5	62	78

Raymond Don Tsztoo
REGISTERED CIVIL ENGINEER

June 6, 2008
PLANS APPROVAL DATE

REGISTERED PROFESSIONAL ENGINEER
Raymond Don Tsztoo
No. C37332
Exp. 6-30-08
CIVIL
STATE OF CALIFORNIA

The State of California or its officers or agents shall not be responsible for the accuracy or completeness of electronic copies of this plan sheet.

To accompany plans dated 11-7-11

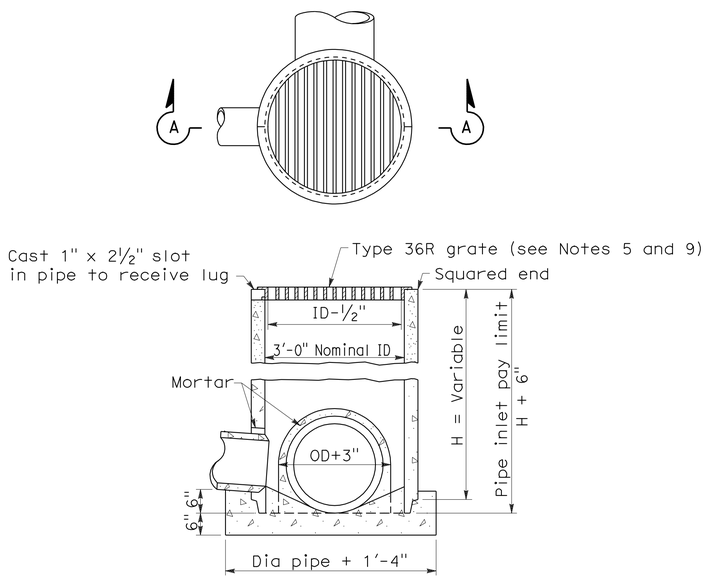

SECTION A-A

TYPE GCP

CONCRETE PIPE INLET WITH GRATE

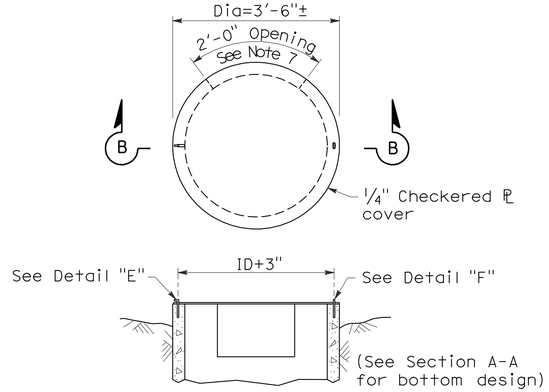

SECTION B-B

TYPE OCP or OCPI

CONCRETE PIPE INLET WITH STEEL COVER
(See Note 6)

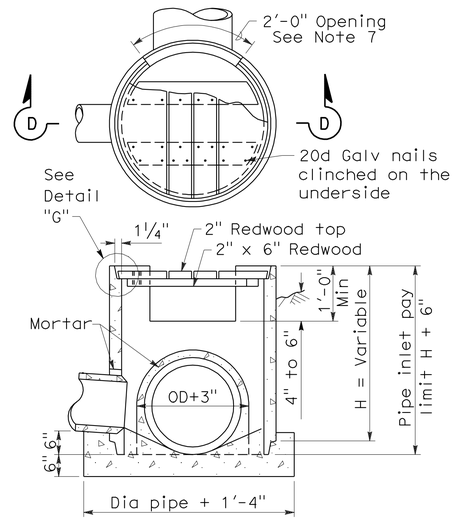

SECTION D-D

TYPE OCP or OCPI

CONCRETE PIPE INLET WITH REDWOOD COVER
(See Notes 6 and 10)

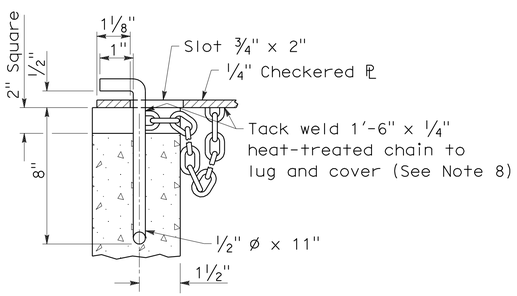

DETAIL "E"

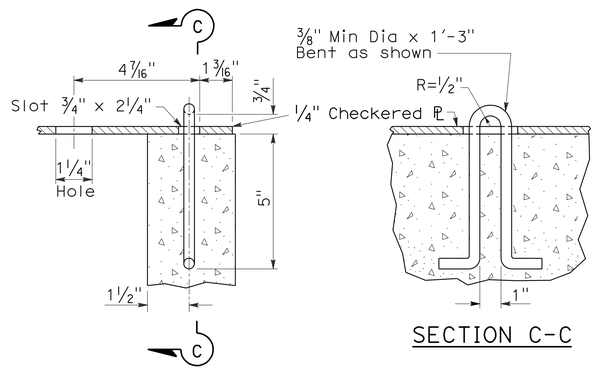

DETAIL "F"

SECTION C-C

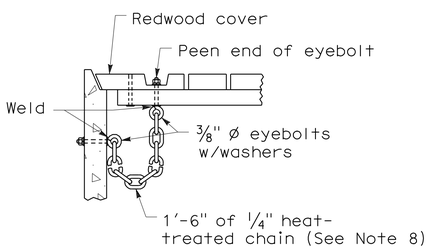

DETAIL "G"

NOTES:

1. For details of steel pipe inlets, see Standard Plan D75A.
2. For details of ladder and steps and when ladder or steps are required, see Standard Plan D75C.
3. Inlet pipes shall not protrude into basin.
4. Except for inlets used for junction boxes, basin floors shall have minimum slope of 4:1 from all directions toward outlet pipe, and a wood trowel finish.
5. See Revised Standard Plan RSP D77A and Standard Plan D77B for Grate and Frame Details and Weights of Miscellaneous Iron and Steel.
6. Designation of Type OCPI pipe inlets on plans indicates trash racks are to be furnished and installed on all side openings. See Standard Plan D75C for Trash Rack details.
7. More than one side opening may be required. Location and number as ordered by the Engineer. Opening may be cast in pipe.
8. Chain to be provided when specified.
9. Place pipe so bars of grate will be parallel with main surface flow.
10. Redwood covers shall only be placed at locations designated on the plans.

STATE OF CALIFORNIA
DEPARTMENT OF TRANSPORTATION

CONCRETE PIPE INLETS

NO SCALE

RSP D75B DATED JUNE 6, 2008 SUPERSEDES STANDARD PLAN D75B
DATED MAY 1, 2006 - PAGE 153 OF THE STANDARD PLANS BOOK DATED MAY 2006.

REVISED STANDARD PLAN RSP D75B

2006 REVISED STANDARD PLAN RSP D75B

5-20-08

DIST	COUNTY	ROUTE	POST MILES TOTAL PROJECT	SHEET NO.	TOTAL SHEETS
03	ED	50	78.9/79.5	63	78

Raymond Don Tsztoo
REGISTERED CIVIL ENGINEER

January 18, 2008
PLANS APPROVAL DATE

REGISTERED PROFESSIONAL ENGINEER
Raymond Don Tsztoo
No. C37332
Exp. 6-30-08
CIVIL
STATE OF CALIFORNIA

The State of California or its officers or agents shall not be responsible for the accuracy or completeness of electronic copies of this plan sheet.

To accompany plans dated 11-7-11

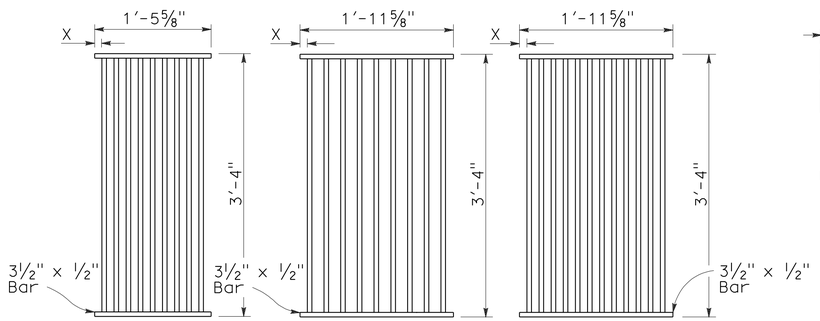

TYPE 18-9

1⅜" Clear spacing. Use within the roadbed on highways where bicycles and pedestrians are excluded.

TYPE 24-9

2" Clear spacing. Use in locations off the roadbed on all types of highways.

TYPE 24-12

1⅜" Clear spacing. Use within the roadbed on highways where bicycles and pedestrians are excluded.

RECTANGULAR GRATE DETAILS

(See table below)

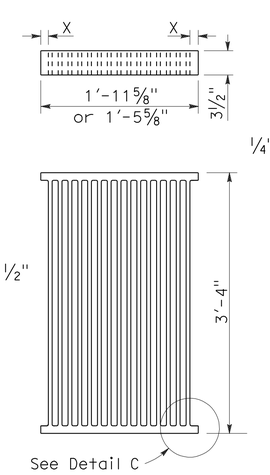

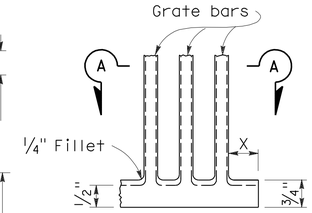

DETAIL C

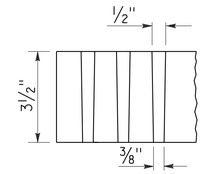

SECTION A-A

ALTERNATIVE CAST NODULAR IRON GRATE OR CAST STEEL GRATE

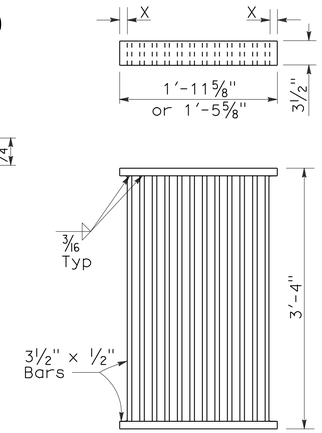

ALTERNATIVE WELDED GRATE

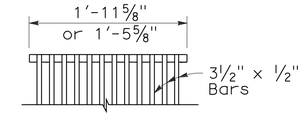

CAST END BLOCK

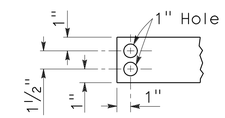

END OF BAR

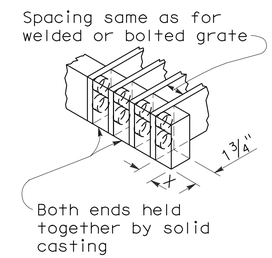

ALTERNATIVE CAST NODULAR IRON OR CAST STEEL END BLOCK GRATE

NOTES:

1. Grate type numbers refer to approximate width of grate in inches and number of bars, respectively.
2. Contractor has the option of using cast nodular iron, cast steel, welded, bolted, or cast end block grate.
3. See Special Provisions for requirements pertaining to galvanizing or asphalt dipping of grates and frames.
4. Rounded top of bars optional on all grates.
5. Pipe inlets with a grate shall be placed so that bars parallel direction of principle surface flow.
6. Full penetration butt welds may be substituted for the fillet welds on all anchors.
7. Standard square, hexagon, round or equivalent headed anchors may be substituted for the right angle hooks on the anchors shown on this plan.
8. Grate and frame weights are based on welded grates (weights of face angles, steps, protection bars, etc. are not included).

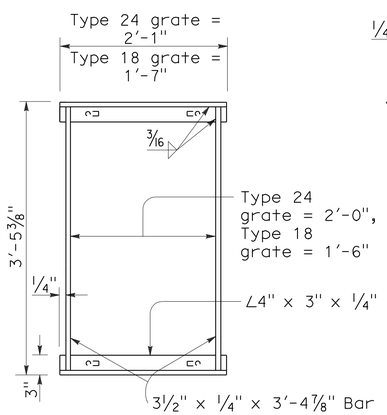

TYPICAL FRAME

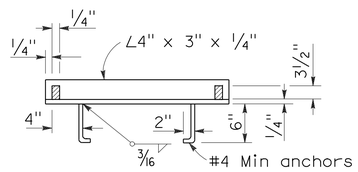

CROSS SECTION

(Thru frame)

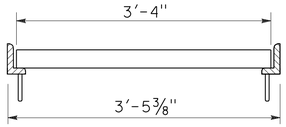

LONGITUDINAL SECTION

(Thru frame and grate)

RECTANGULAR FRAME DETAILS

(For all rectangular grates)

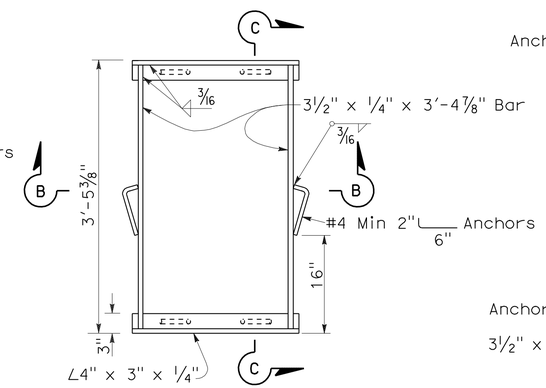

TYPICAL FRAME

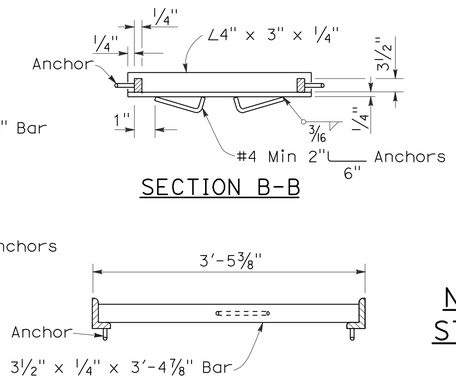

SECTION B-B

SECTION C-C

ALTERNATIVE ANCHOR FOR RECTANGULAR FRAME

(For details not shown, See Rectangular Frame Details)

INLET TYPE	GRATE TYPE	No. OF GRATES	WEIGHT LB
GDO	24-12	2	634
GOL-7	24-12	1	326
GOL-10	24-12	1	326
GO,G1,G2,G3,G4 (TYPE 24)	24-9	1	263
	24-12	1	326
G4 (TYPE 18),G5,G6	18-9	1	249
GT1	18-9	2	498
GT2	18-9	2	498
GT3	24-12	2	652
GT4	24-12	2	652
TRASH RACK			22

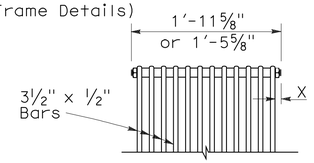

BOLTED END BLOCK

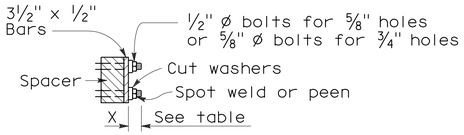

BOLTING DETAIL

ALTERNATIVE BOLTED GRATE

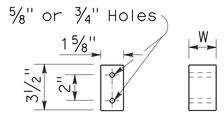

BAR SPACER

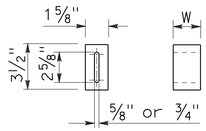

ALTERNATIVE SPACER

W = 1⅜" or 2"

GRATE BAR SPACING TABLE

TYPE	No. OF BARS	CLEAR BAR SPACING	X
18-9	9	1⅜"	1 1/16"
24-9	9	2"	1 9/16"
24-12	12	1⅜"	1¼"

INLET TYPE	COVER TYPE	WEIGHT LB
OS	PLATE	174
OL-7	PLATE	170
OL-10	PLATE	170
OL-14	PLATE	170
OL-21	PLATE	170
OCP	PLATE	112
OCPI	PLATE	112
OCPI	REDWOOD	42
OMP	PLATE	177
OMPI	PLATE	177

BASIS FOR MISC IRON & STEEL FINAL PAY WEIGHTS FOR DRAINAGE INLETS

(See General Notes, No 8)

STATE OF CALIFORNIA
DEPARTMENT OF TRANSPORTATION

GRATE DETAILS

NO SCALE

RSP D77A DATED JANUARY 18, 2008 SUPERSEDES STANDARD PLAN D77A DATED MAY 1, 2006 - PAGE 155 OF THE STANDARD PLANS BOOK DATED MAY 2006.

REVISED STANDARD PLAN RSP D77A

2006 REVISED STANDARD PLAN RSP D77A

12-14-07

DIST	COUNTY	ROUTE	POST MILES TOTAL PROJECT	SHEET NO.	TOTAL SHEETS
03	ED	50	78.9/79.5	64	78

Randell D. Hiatt
REGISTERED CIVIL ENGINEER

June 6, 2008
PLANS APPROVAL DATE

REGISTERED PROFESSIONAL ENGINEER
Randell D. Hiatt
No. C50200
Exp. 6-30-09
CIVIL
STATE OF CALIFORNIA

The State of California or its officers or agents shall not be responsible for the accuracy or completeness of electronic copies of this plan sheet.

To accompany plans dated 11-7-11

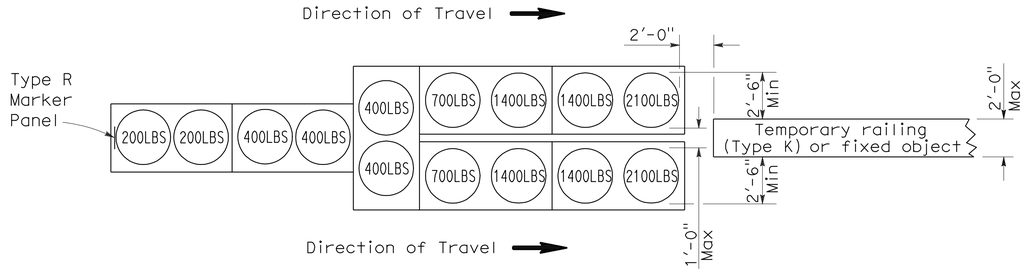

ARRAY 'TU14'

Approach speed 45 mph or more

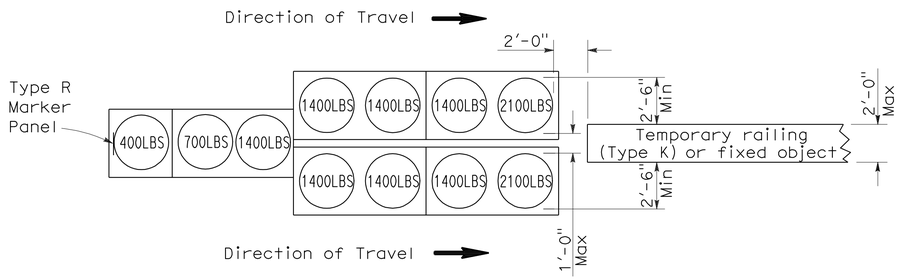

ARRAY 'TU11'

Approach speed less than 45 mph

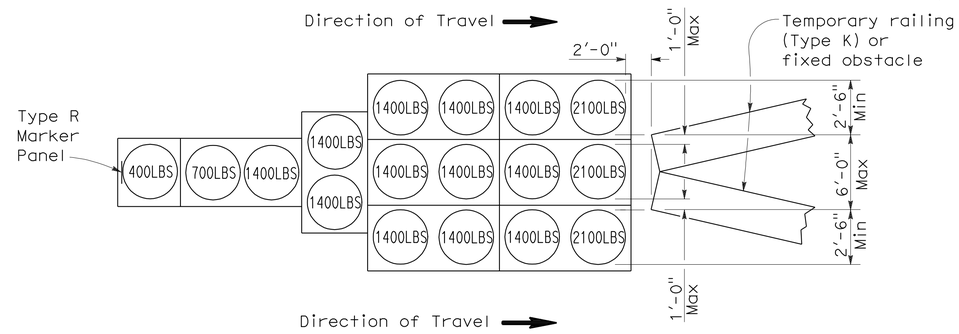

ARRAY 'TU17'

Approach speed less than 45 mph

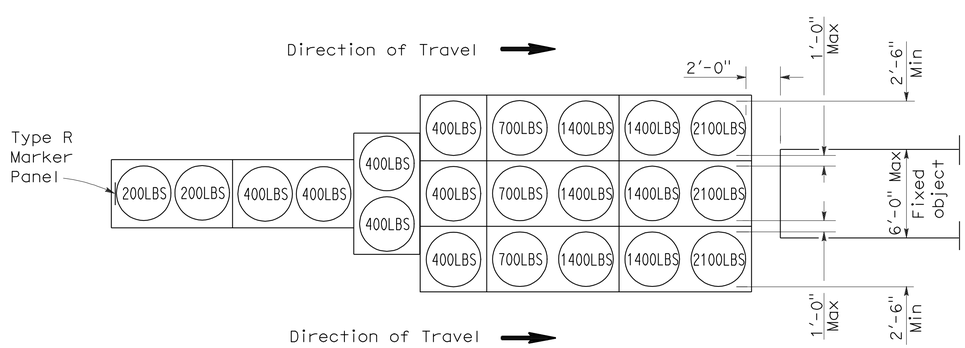

ARRAY 'TU21'

Approach speed 45 mph or more

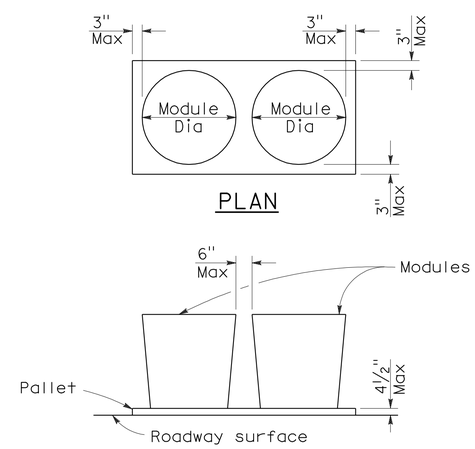

PLAN

ELEVATION

CRASH CUSHION PALLET DETAIL

See Note 7

NOTES:

1. (XXX) Indicates sand filled module location and weight of sand in pounds for each module. Module spacing is based on the greater diameter of the module.
2. All sand weights are nominal.
3. Temporary crash cushion arrays shall not encroach on the traveled way.
4. Place the top of Type R marker panel 1" below the module lid.
5. Refer to Standard Plan A73B for marker details.
6. Approach speeds indicated conform to NCHRP 350 Report criteria.
7. Use of pallets is optional.

STATE OF CALIFORNIA
DEPARTMENT OF TRANSPORTATION

TEMPORARY CRASH CUSHION, SAND FILLED (UNIDIRECTIONAL)

NO SCALE

RSP T1A DATED JUNE 6, 2008 SUPERSEDES STANDARD PLAN T1A
DATED MAY 1, 2006 - PAGE 211 OF THE STANDARD PLANS BOOK DATED MAY 2006.

REVISED STANDARD PLAN RSP T1A

2006 REVISED STANDARD PLAN RSP T1A

DIST	COUNTY	ROUTE	POST MILES TOTAL PROJECT	SHEET NO.	TOTAL SHEETS
03	ED	50	78.9/79.5	65	78

Randell D. Hiatt
REGISTERED CIVIL ENGINEER

June 6, 2008
PLANS APPROVAL DATE

REGISTERED PROFESSIONAL ENGINEER
Randell D. Hiatt
No. C50200
Exp. 6-30-09
CIVIL
STATE OF CALIFORNIA

The State of California or its officers or agents shall not be responsible for the accuracy or completeness of electronic copies of this plan sheet.

To accompany plans dated 11-7-11

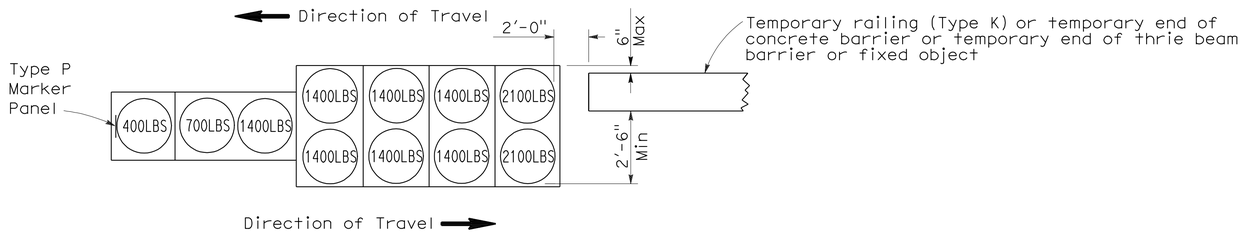

ARRAY 'TB11'

Approach speed less than 45 mph

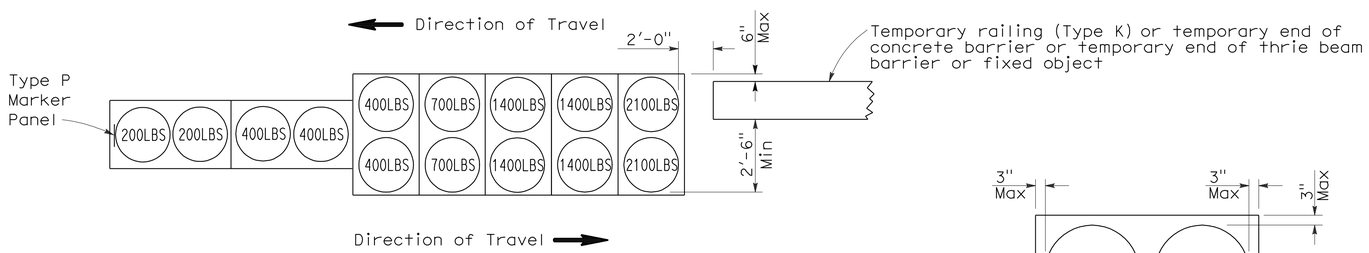

ARRAY 'TB14'

Approach speed 45 mph or more

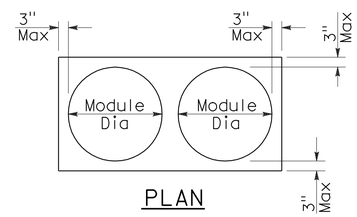

PLAN

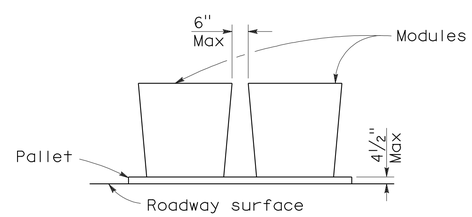

ELEVATION

CRASH CUSHION PALLET DETAIL

See Note 7

NOTES:

1. (XXX) Indicates sand filled module location and weight of sand in pounds for each module. Module spacing is based on the greater diameter of the module.
2. All sand weights are nominal.
3. Temporary crash cushion arrays shall not encroach on the traveled way.
4. Place the Type P marker panel so that the bottom of the panel rests upon the pallet.
5. Refer to Standard Plan A73B for marker details.
6. Approach speeds indicated conform to NCHRP 350 Report criteria.
7. Use of pallets is optional.

STATE OF CALIFORNIA
DEPARTMENT OF TRANSPORTATION

TEMPORARY CRASH CUSHION, SAND FILLED (BIDIRECTIONAL)

NO SCALE

RSP T1B DATED JUNE 6, 2008 SUPERSEDES STANDARD PLAN T1B
DATED MAY 1, 2006 - PAGE 212 OF THE STANDARD PLANS BOOK DATED MAY 2006.

REVISED STANDARD PLAN RSP T1B

2006 REVISED STANDARD PLAN RSP T1B

5-15-08

DIST	COUNTY	ROUTE	POST MILES TOTAL PROJECT	SHEET NO.	TOTAL SHEETS
03	ED	50	78.9/79.5	66	78

Randell D. Hiatt
REGISTERED CIVIL ENGINEER

June 6, 2008
PLANS APPROVAL DATE

REGISTERED PROFESSIONAL ENGINEER
Randell D. Hiatt
No. C50200
Exp. 6-30-09
CIVIL
STATE OF CALIFORNIA

The State of California or its officers or agents shall not be responsible for the accuracy or completeness of electronic copies of this plan sheet.

To accompany plans dated 11-7-11

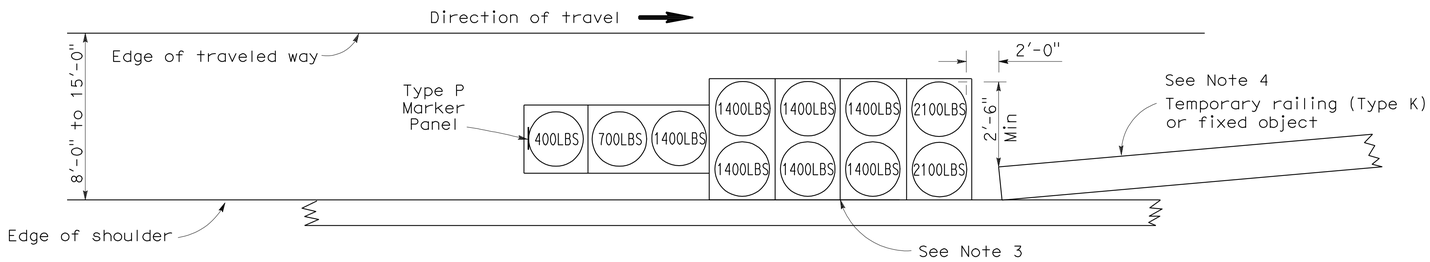

ARRAY 'TS11'

Approach speed less than 45 mph
See Note 9

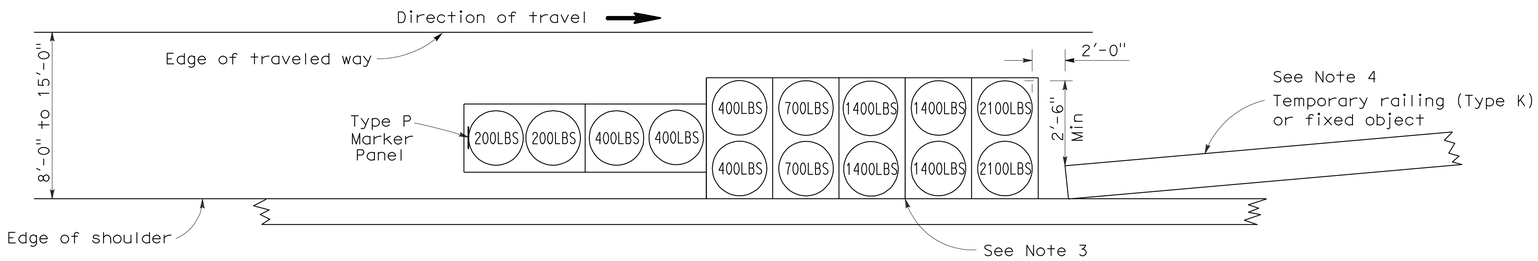

ARRAY 'TS14'

Approach speed 45 mph or more
See Note 9

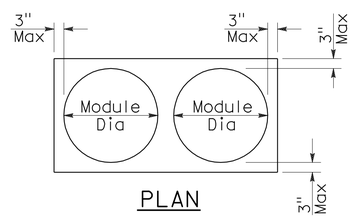

PLAN

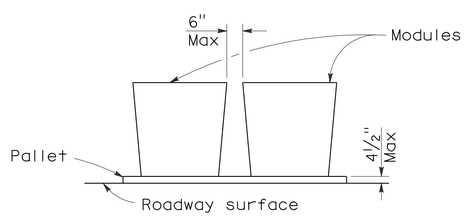

ELEVATION

CRASH CUSHION PALLET DETAIL

See Note 11

NOTES:

1. (XXX) Indicates sand filled module location and weight of sand in pounds for each module. Module spacing is based on the greater diameter of the module.
2. All sand weights are nominal.
3. The temporary crash cushion arrays shown on this plan shall be used only in locations where there will be traffic on one side of the temporary crash cushion array.
4. If the fixed object or approach end of the temporary railing is less than 15'-0" from the edge of traveled way, a temporary crash cushion is required in a construction or work zone.
5. Temporary crash cushion arrays shall not encroach on the traveled way.
6. Arrays for median shoulders shall conform to details shown on this plan for outside shoulders.
7. Place the Type P marker panel so that the bottom of the panel rests upon the pallet and faces traffic.
8. Refer to Standard Plan A73B for marker details.
9. For shoulder widths less than 8'-0", appropriate approved crash cushion protection, other than sand filled modules, shall be provided at fixed objects and at approach ends of temporary railing. The specific type of crash cushion shall be as shown on the project plans or as specified in the Special Provisions, or if not shown on the project plans or specified in the Special Provisions, shall be as approved by the Engineer.
10. Approach speeds indicated conform to NCHRP 350 Report criteria.
11. Use of pallets is optional.

STATE OF CALIFORNIA
DEPARTMENT OF TRANSPORTATION

TEMPORARY CRASH CUSHION, SAND FILLED (SHOULDER INSTALLATIONS)

NO SCALE

RSP T2 DATED JUNE 6, 2008 SUPERSEDES STANDARD PLAN T2
DATED MAY 1, 2006 - PAGE 213 OF THE STANDARD PLANS BOOK DATED MAY 2006.

REVISED STANDARD PLAN RSP T2

2006 REVISED STANDARD PLAN RSP T2

Dist	COUNTY	ROUTE	POST MILES TOTAL PROJECT	SHEET No.	TOTAL SHEETS
03	ED	50	78.9/79.5	67	78

Randell D. Hiatt
REGISTERED CIVIL ENGINEER

May 20, 2011
PLANS APPROVAL DATE

REGISTERED PROFESSIONAL ENGINEER
Randell D. Hiatt
No. C50200
Exp. 6-30-11
CIVIL
STATE OF CALIFORNIA

The State of California or its officers or agents shall not be responsible for the accuracy or completeness of electronic copies of this plan sheet.

To accompany plans dated 11-7-11

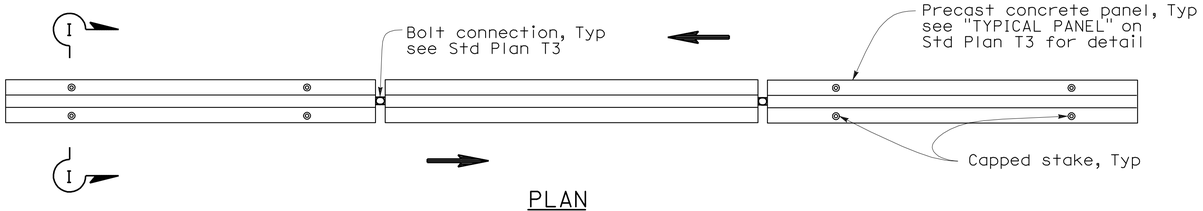

PLAN

RAILING STAKING CONFIGURATION FOR TWO-WAY TRAFFIC

See Note 1

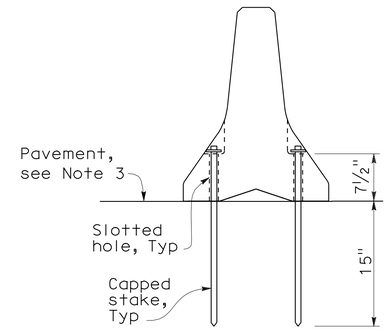

SECTION I-I

NOTES:

1. Where Type K Temporary Railing is placed as a temporary or long term barrier in two-way traffic on highways with less than 24" from the edge of traveled way, use four capped stakes per every other panel with end panels staked.
2. Where Type K Temporary Railing is placed 3" to 24" from the edge of an excavation on highways, use two capped stakes per panel along the traffic side.
3. Staked Type K Temporary Railing must be supported by at least 4" thick concrete, hot mix asphalt or existing asphalt concrete pavement.
4. The minimum yield strength for the washer must be 60,000 psi.
5. Direction of adjacent traffic indicated by ⟹.

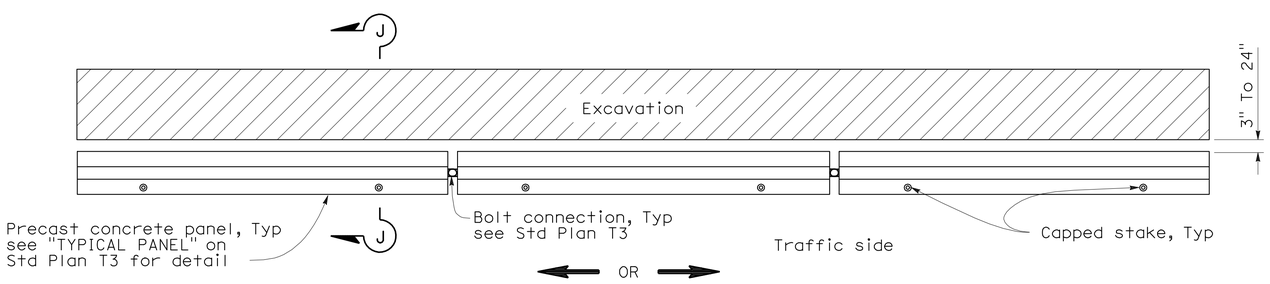

PLAN

RAILING STAKING CONFIGURATION ADJACENT TO AN EXCAVATION

See Note 2

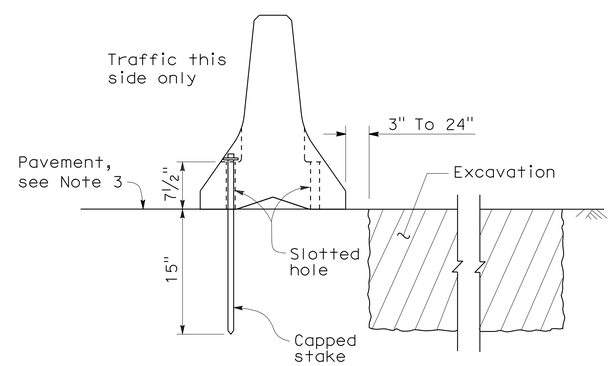

SECTION J-J

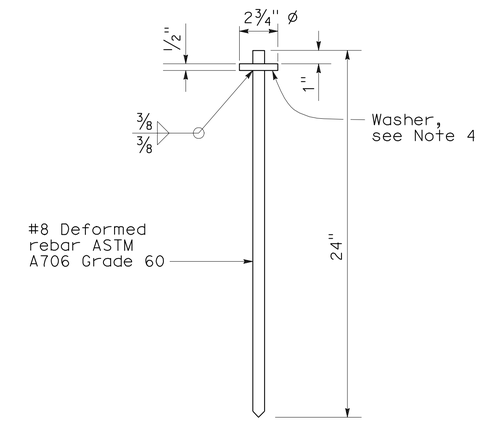

CAPPED STAKE DETAIL

STATE OF CALIFORNIA
DEPARTMENT OF TRANSPORTATION

TEMPORARY RAILING (TYPE K)

NO SCALE

NSP T3A DATED MAY 20, 2011 SUPPLEMENTS
THE STANDARD PLANS BOOK DATED MAY 2006.

NEW STANDARD PLAN NSP T3A

2006 NEW STANDARD PLAN NSP T3A

DIST	COUNTY	ROUTE	POST MILES TOTAL PROJECT	SHEET NO.	TOTAL SHEETS
03	ED	50	78.9/79.5	68	78

REGISTERED CIVIL ENGINEER

November 17, 2006
PLANS APPROVAL DATE

REGISTERED PROFESSIONAL ENGINEER — Greg W. Edwards — No. C36386 — Exp. 6-30-08 — CIVIL — STATE OF CALIFORNIA

The State of California or its officers or agents shall not be responsible for the accuracy or completeness of electronic copies of this plan sheet.

To accompany plans dated 11-7-11

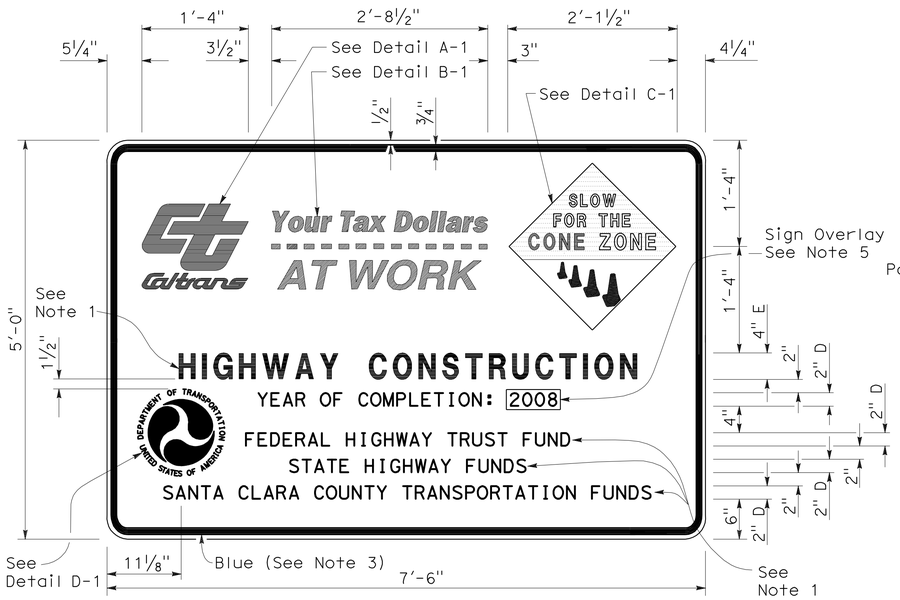

TYPE 1

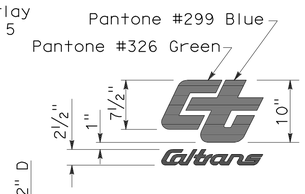

DETAIL A-1

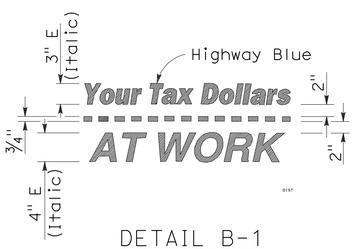

DETAIL B-1
(See Note 3)

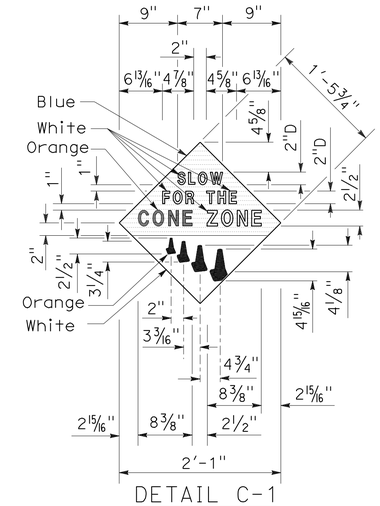

DETAIL C-1
(See Note 4)

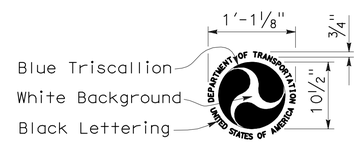

DETAIL D-1
(See Note 6)

NOTES:

1. The sign messages shown for type of project and fund types are examples only. See the Special Provisions for the applicable type of project and fund type messages to be used.
2. Except as otherwise shown, the legend of sign shall be black on a white background (non-reflective).
3. The border of the signs and details "B-1" and "B-2" shall be blue (non-reflective).
4. The diamond in details "C-1" and "C-2" shall be blue for the background of message, " SLOW FOR THE CONE ZONE", and white background for the orange cones. The color and type of font for the "SLOW FOR THE CONE ZONE" message shall be: "SLOW" white D; "FOR THE" white D; "CONE" orange Arial font; "ZONE" white Arial font.
5. Year of completion of project construction shown on the overlay is an example only. See the Special Provisions.
6. Use when the Project involves Federal Highway Trust Fund.

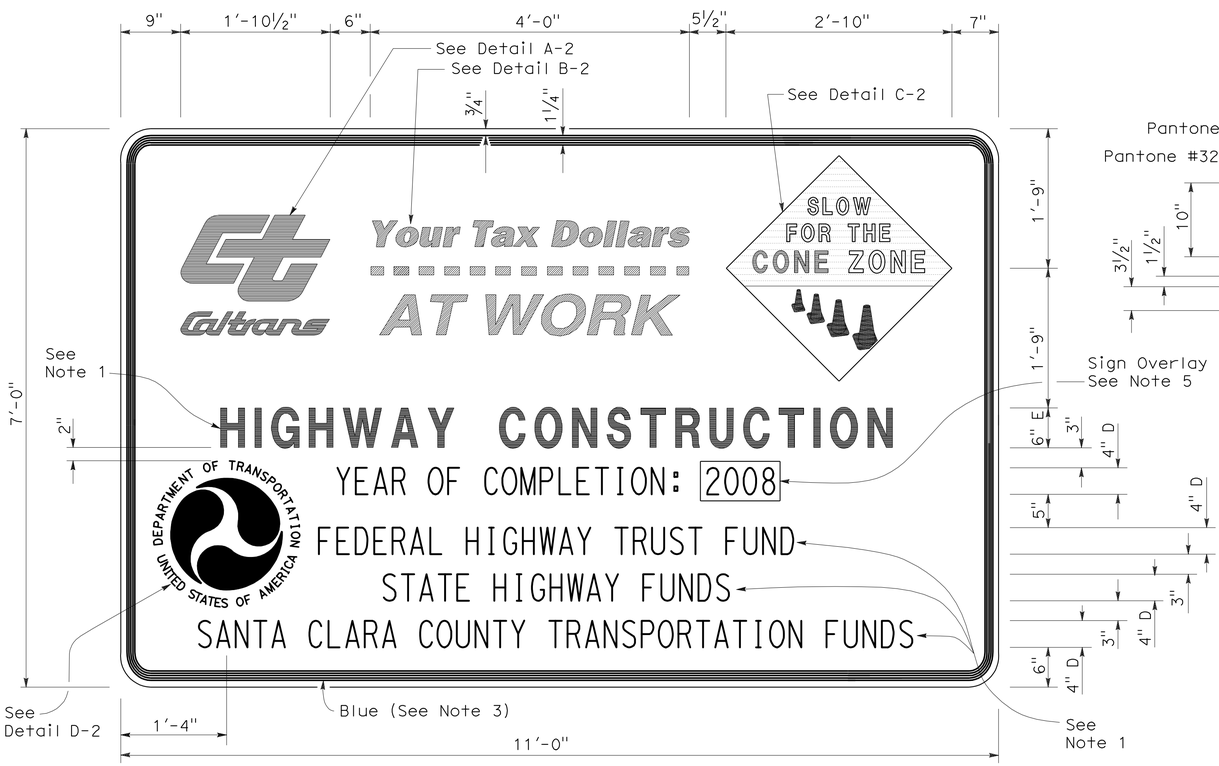

TYPE 2

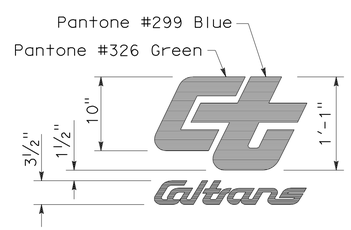

DETAIL A-2

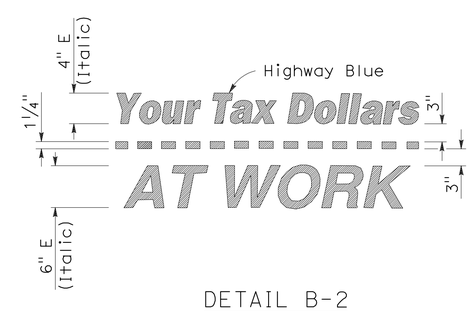

DETAIL B-2
(See Note 3)

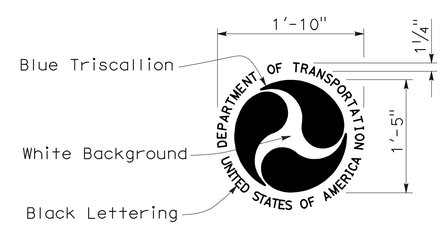

DETAIL D-2
(See Note 6)

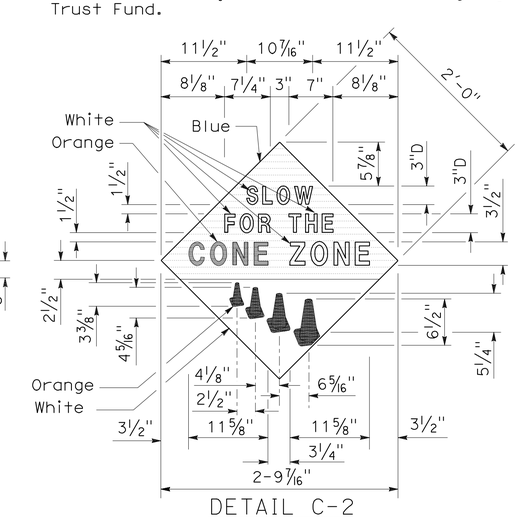

DETAIL C-2
(See Note 4)

STATE OF CALIFORNIA
DEPARTMENT OF TRANSPORTATION

CONSTRUCTION PROJECT FUNDING IDENTIFICATION SIGNS

NO SCALE

RSP T7 DATED NOVEMBER 17, 2006 SUPERSEDES STANDARD PLAN T7
DATED MAY 1, 2006 - PAGE 217 OF THE STANDARD PLANS BOOK DATED MAY 2006.

REVISED STANDARD PLAN RSP T7

2006 REVISED STANDARD PLAN RSP T7

9-7-06

DIST	COUNTY	ROUTE	POST MILES TOTAL PROJECT	SHEET NO.	TOTAL SHEETS
03	ED	50	78.9/79.5	69	78

LICENSED LANDSCAPE ARCHITECT

April 3, 2009
PLANS APPROVAL DATE

LICENSED LANDSCAPE ARCHITECT — Robert B. Schott 3025 — Signature — 11-30-10 Renewal Date — 2-25-09 Date — STATE OF CALIFORNIA

The State of California or its officers or agents shall not be responsible for the accuracy or completeness of electronic copies of this plan sheet.

To accompany plans dated 11-7-11

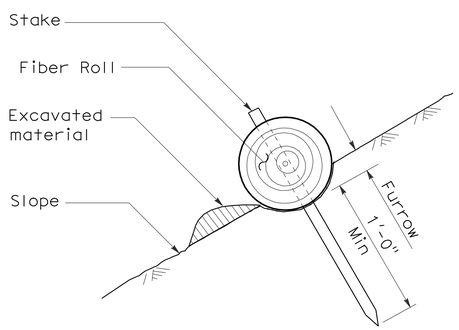

SECTION

TEMPORARY FIBER ROLL (TYPE 1)

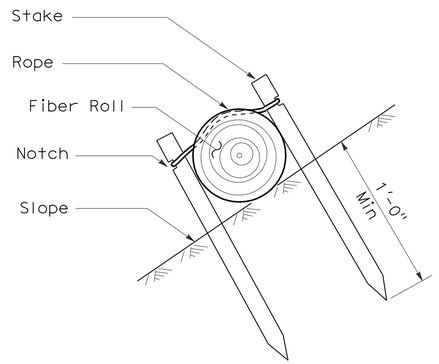

SECTION

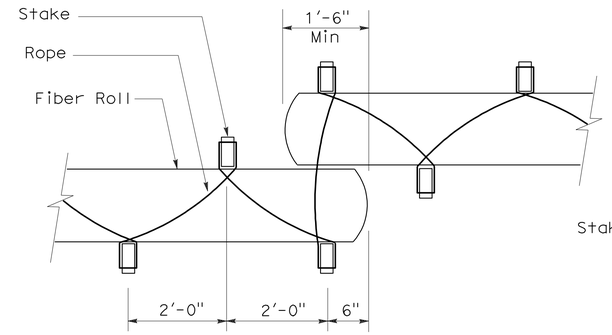

PLAN

TEMPORARY FIBER ROLL (TYPE 2)

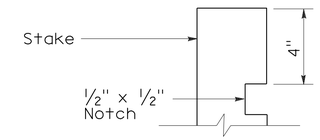

ELEVATION

STAKE NOTCH DETAIL

NOTES:

1. Temporary fiber roll spacing varies depending upon slope inclination.
2. Installations shown in the perspectives are for slope inclination of 10:1 and steeper.

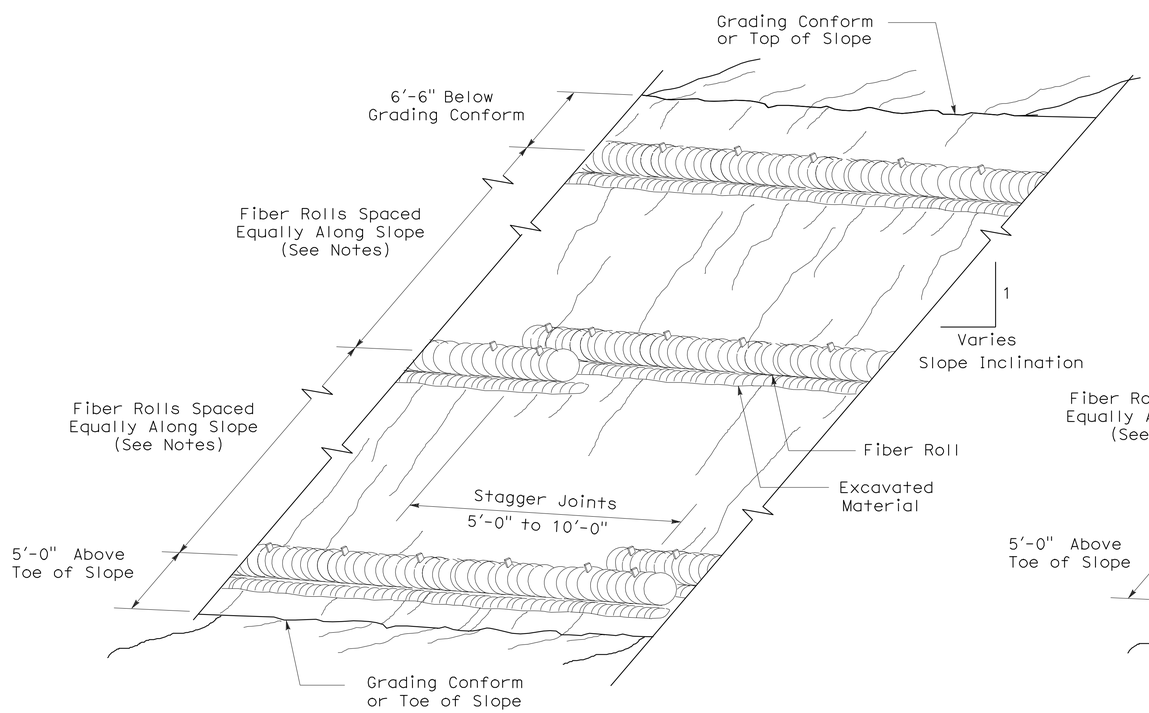

PERSPECTIVE

TEMPORARY FIBER ROLL (TYPE 1)

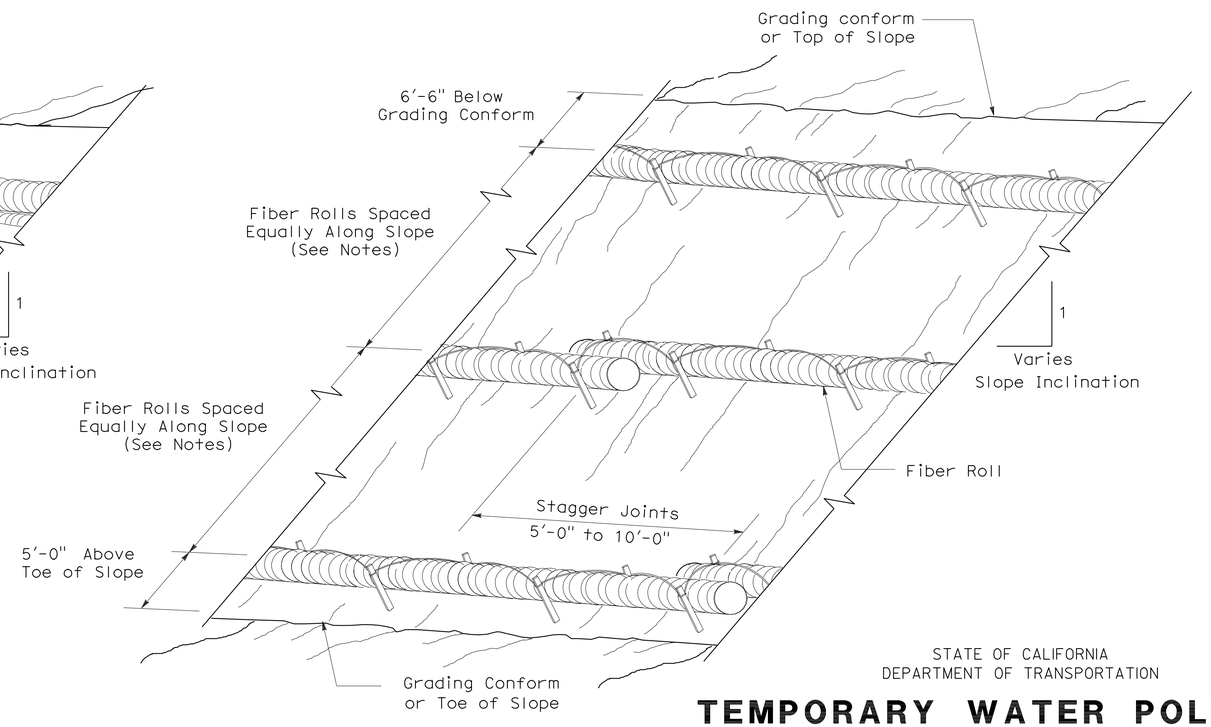

PERSPECTIVE

TEMPORARY FIBER ROLL (TYPE 2)

STATE OF CALIFORNIA
DEPARTMENT OF TRANSPORTATION

TEMPORARY WATER POLLUTION CONTROL DETAILS (TEMPORARY FIBER ROLL)

NO SCALE

RSP T56 DATED APRIL 3, 2009 SUPERSEDES STANDARD PLAN T56
DATED MAY 1, 2006 - PAGE 232 OF THE STANDARD PLANS BOOK DATED MAY 2006.

REVISED STANDARD PLAN RSP T56

2006 REVISED STANDARD PLAN RSP T56

2-23-09

DIST	COUNTY	ROUTE	POST MILES TOTAL PROJECT	SHEET NO.	TOTAL SHEETS
03	ED	50	78.9/79.5	70	78

LICENSED LANDSCAPE ARCHITECT

August 15, 2008
PLANS Approval DATE

The State of California or its officers or agents shall not be responsible for the accuracy or completeness of electronic copies of this plan sheet.

LICENSED LANDSCAPE ARCHITECT — Robert B. Schott — Signature — 11-04-08 Renewal Date — 08-11-08 Date — STATE OF CALIFORNIA

To accompany plans dated 11-7-11

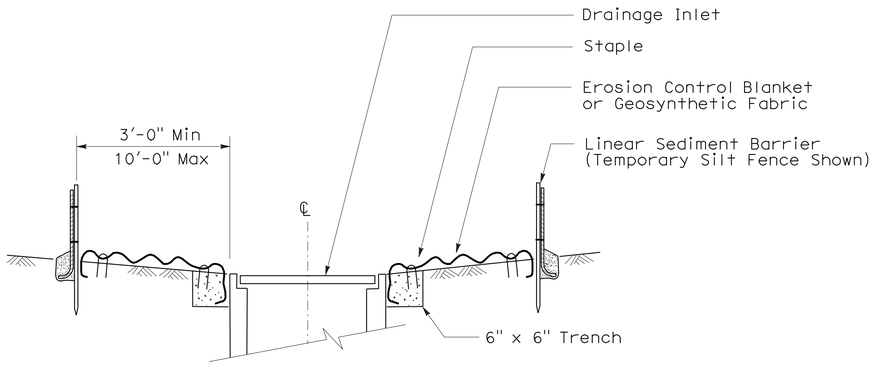

SECTION A-A

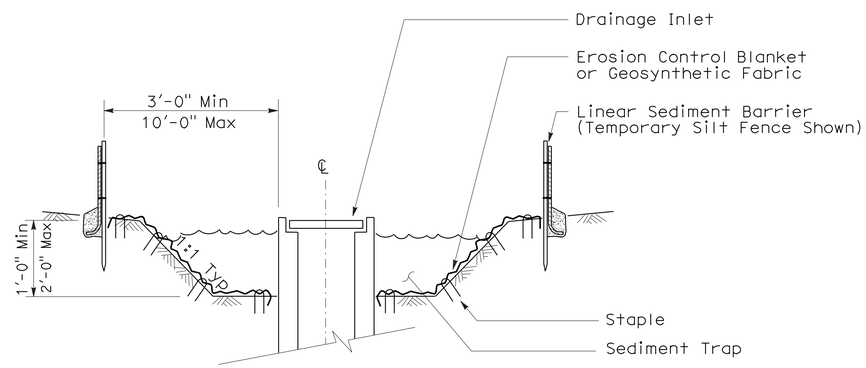

SECTION B-B

NOTES:

1. See Standard Plan T51 for Temporary Silt Fence.
2. Dimensions may vary to fit field conditions.

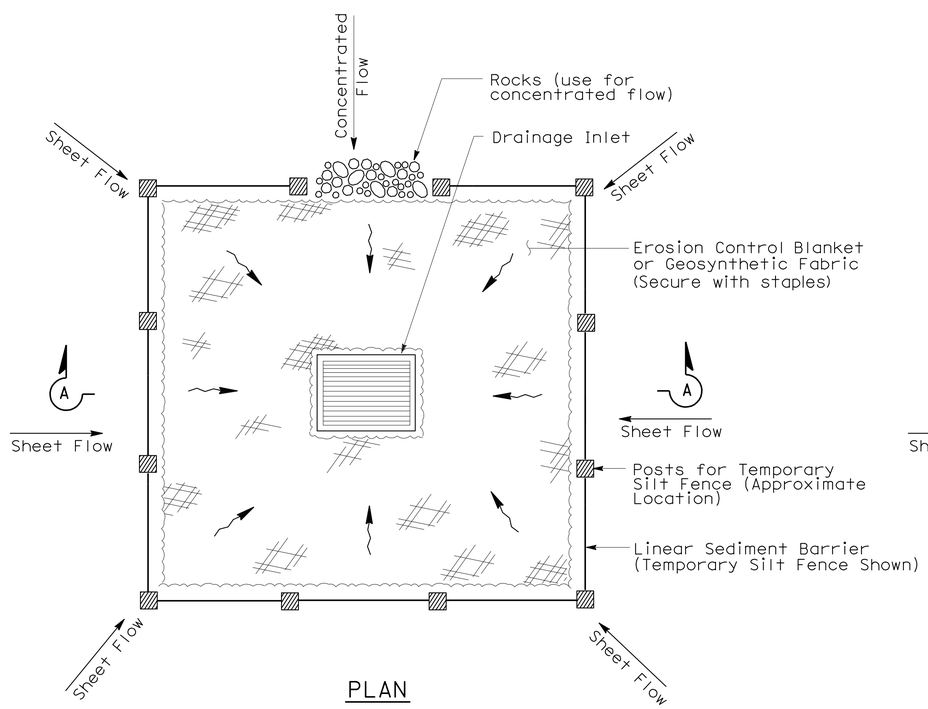

PLAN

TEMPORARY DRAINAGE INLET PROTECTION (TYPE 1)

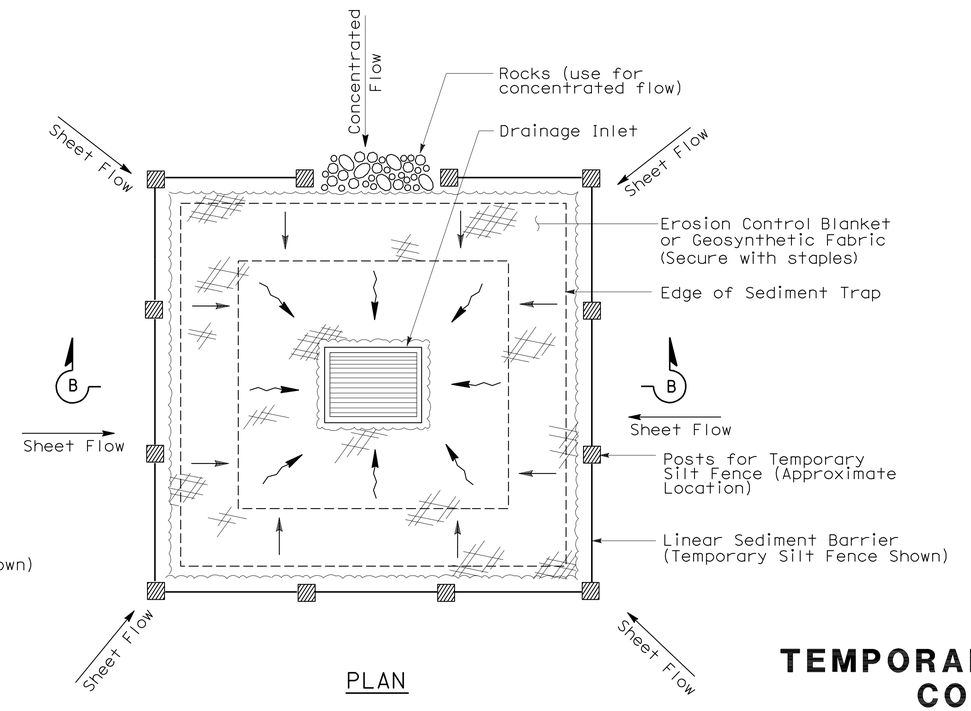

PLAN

TEMPORARY DRAINAGE INLET PROTECTION (TYPE 2) (EXCAVATED SEDIMENT TRAP)

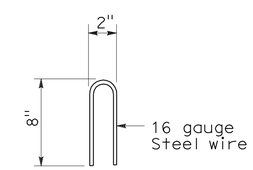

STAPLE DETAIL

STATE OF CALIFORNIA
DEPARTMENT OF TRANSPORTATION

TEMPORARY WATER POLLUTION CONTROL DETAILS (TEMPORARY DRAINAGE INLET PROTECTION)

NO SCALE

NSP T61 DATED AUGUST 15, 2008 SUPPLEMENTS THE STANDARD PLANS BOOK DATED MAY 2006.

NEW STANDARD PLAN NSP T61

2006 NEW STANDARD PLAN NSP T61

7-11-08

DIST	COUNTY	ROUTE	POST MILES TOTAL PROJECT	SHEET NO.	TOTAL SHEETS
03	ED	50	78.9/79.5	71	78

LICENSED LANDSCAPE ARCHITECT

August 15, 2008
PLANS APPROVAL DATE

The State of California or its officers or agents shall not be responsible for the accuracy or completeness of electronic copies of this plan sheet.

LICENSED LANDSCAPE ARCHITECT — Robert B. Schott — Signature — 11-04-08 Renewal Date — 08-11-08 Date — STATE OF CALIFORNIA

To accompany plans dated 11-7-11

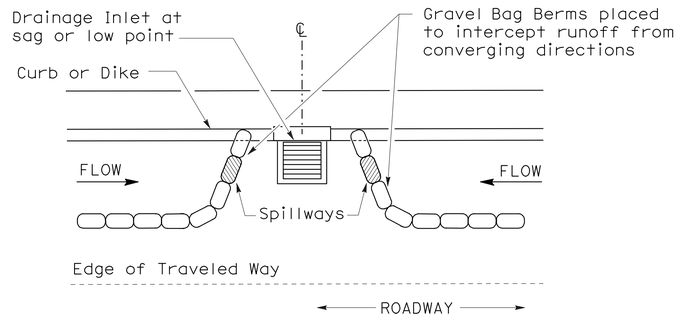

PLAN

CONFIGURATION FOR SAG POINT INLET (GRAVEL BAG BERM)

GRAVEL BAG BERM (TYPE 3A) SPACING TABLE

SLOPE OF ROADWAY (PERCENT)	1 to 3.9	4 to 5.9	6 to 7.9	8 to 10	10+
INTERVAL BETWEEN BERM	100′	75′	50′	25′	12′

For slope of less than 1%, install barriers only if erosion/sediment is prevalent

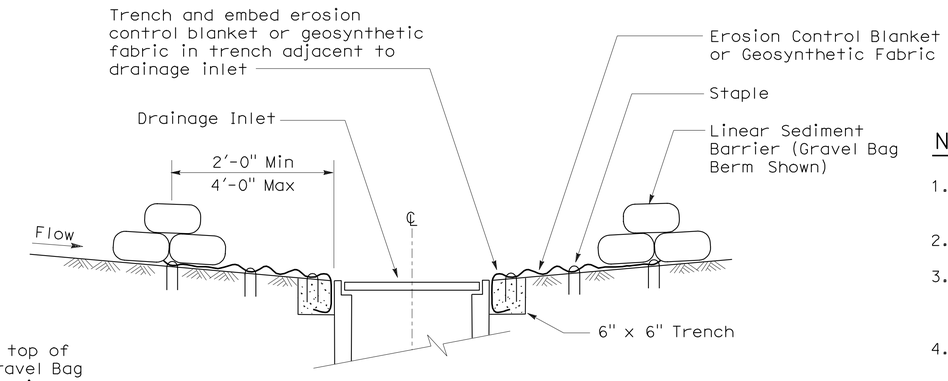

SECTION A-A

NOTES:

1. Place safety cones adjacent to drainage inlet protection.
2. Dimensions may vary to fit field conditions.
3. Install a minimum of 3 gravel bag berms upstream of each drainage inlet to be protected.
4. Position erosion control blanket or geosynthetic fabric at edge of concrete apron and secure in trench.
5. Erosion control blanket or geosynthetic fabric is not required if the area adjacent to the drainage inlet is vegetated or paved.

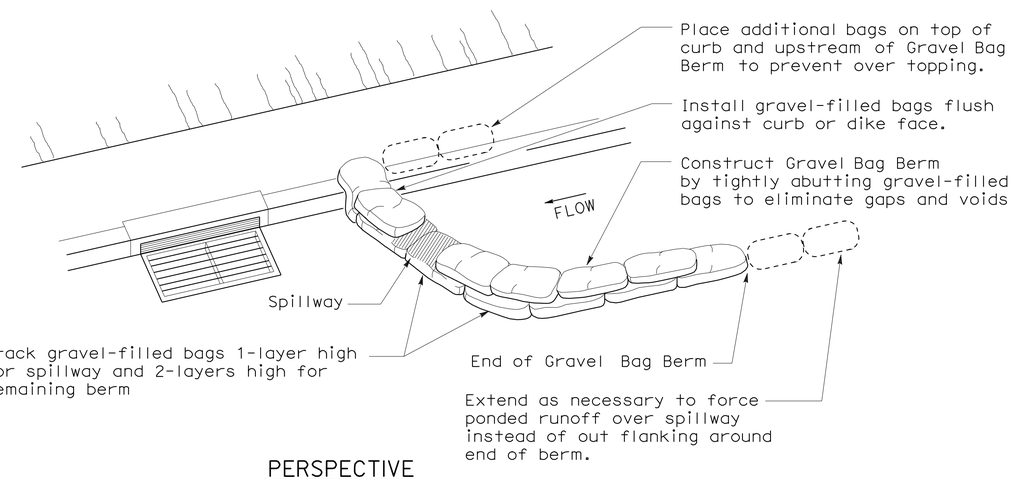

PERSPECTIVE

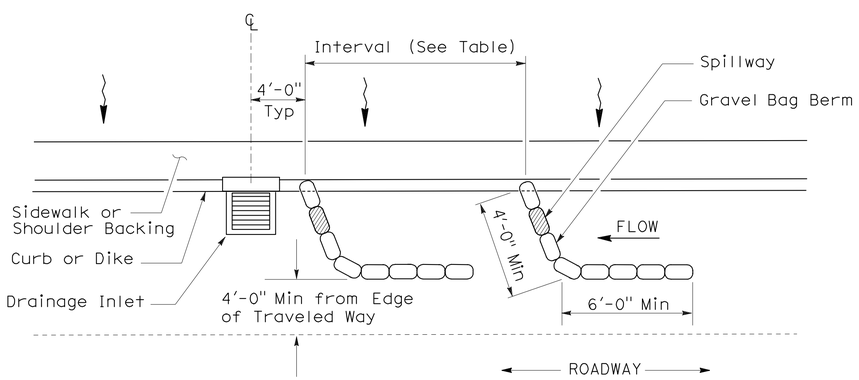

PLAN

TEMPORARY DRAINAGE INLET PROTECTION (TYPE 3A) (GRAVEL BAG BERM)

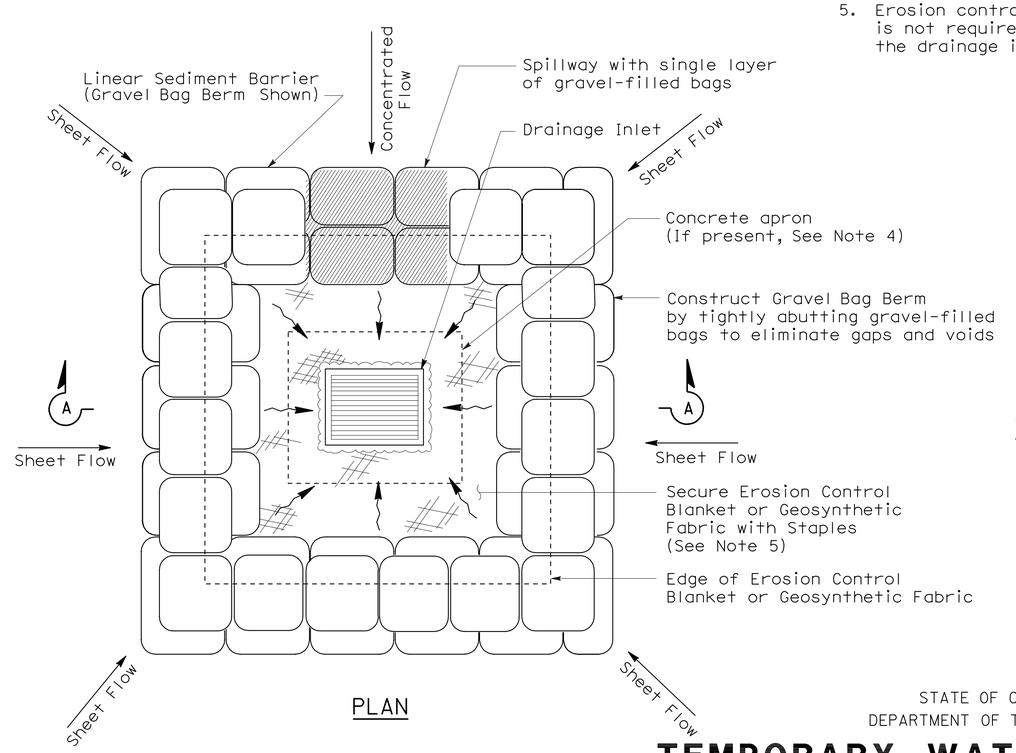

PLAN

TEMPORARY DRAINAGE INLET PROTECTION (TYPE 3B)

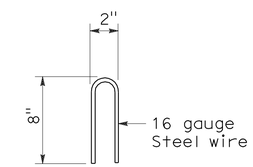

STAPLE DETAIL

STATE OF CALIFORNIA
DEPARTMENT OF TRANSPORTATION

TEMPORARY WATER POLLUTION CONTROL DETAILS (TEMPORARY DRAINAGE INLET PROTECTION)

NO SCALE

NSP T62 DATED AUGUST 15, 2008 SUPPLEMENTS THE STANDARD PLANS BOOK DATED MAY 2006.

NEW STANDARD PLAN NSP T62

2006 NEW STANDARD PLAN NSP T62

7-11-08

DIST	COUNTY	ROUTE	POST MILES TOTAL PROJECT	SHEET NO.	TOTAL SHEETS
03	ED	50	78.9/79.5	72	78

LICENSED LANDSCAPE ARCHITECT

August 15, 2008
PLANS APPROVAL DATE

The State of California or its officers or agents shall not be responsible for the accuracy or completeness of electronic copies of this plan sheet.

LICENSED LANDSCAPE ARCHITECT Robert B. Schott 3025 Signature 11-04-08 Renewal Date 08-11-08 Date STATE OF CALIFORNIA

To accompany plans dated 11-7-11

FLEXIBLE SEDIMENT BARRIER SPACING TABLE

SLOPE OF ROADWAY (PERCENT)	0 to 0.9	1 to 1.9	2 to 2.9	3 to 4	5+
INTERVAL BETWEEN BARRIERS	50′	35′	30′	25′	20′
ANGLE FROM FACE OF CURB	70°	70°	70°	45°	45°
SUGGESTED BARRIER LENGTH	6′	6′	6′	6′	6′

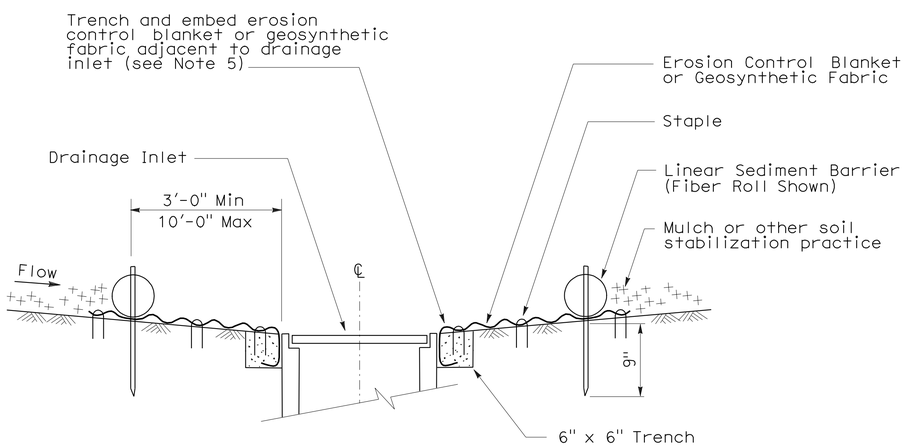

SECTION A-A

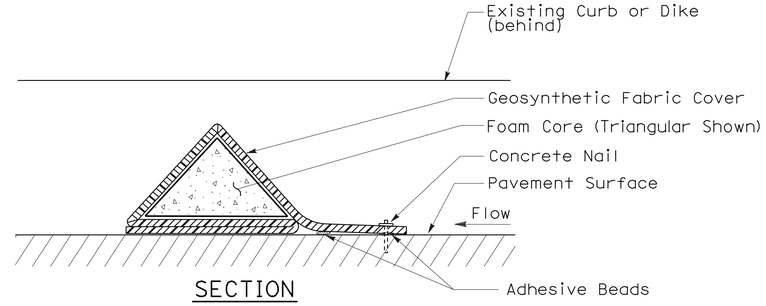

SECTION

FLEXIBLE SEDIMENT BARRIER DETAIL (FOAM BARRIER SHOWN)

NOTES:

1. See Standard Plan T51 for Temporary Silt Fence.
2. Dimensions may vary to fit field conditions.
3. Install a minimum of 3 flexible sediment barriers upstream of each drainage inlet to be protected.
4. Position erosion control blanket or geosynthetic fabric at edge of concrete apron and secure in trench.
5. Erosion control blanket or geosynthetic fabric is not required if the area adjacent to the drainage inlet is vegetated.

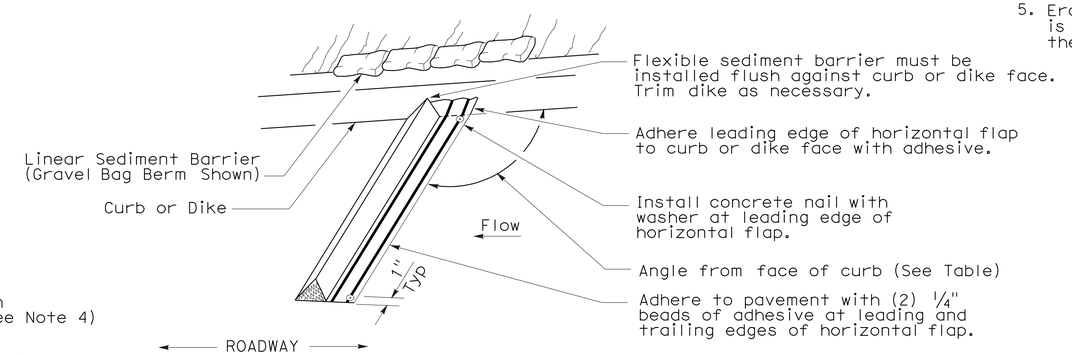

PERSPECTIVE

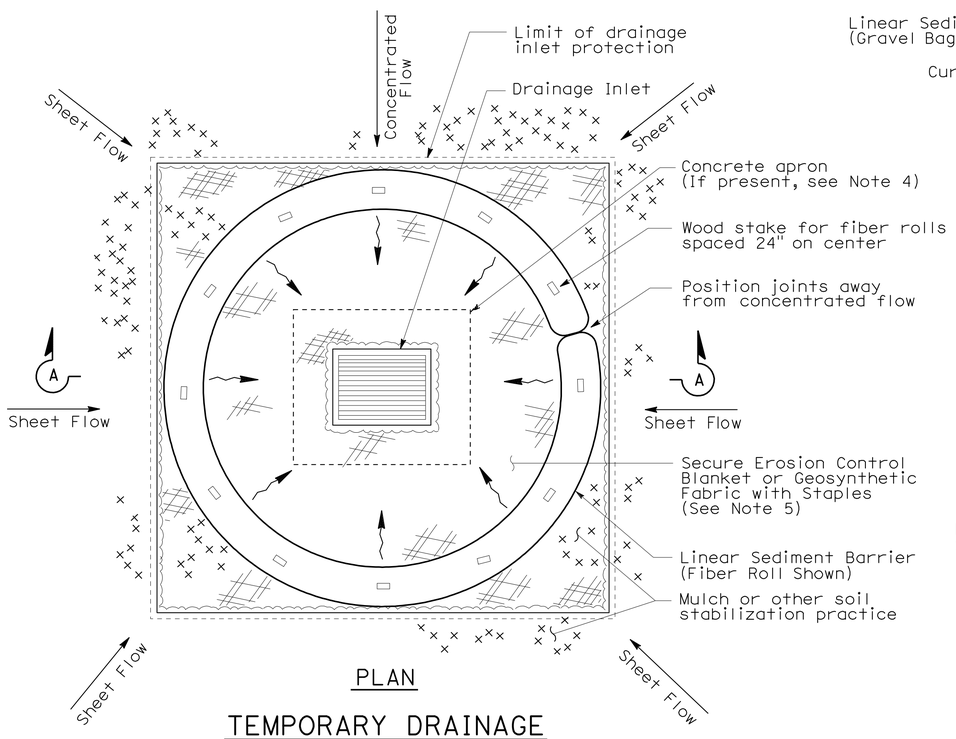

PLAN

TEMPORARY DRAINAGE INLET PROTECTION (TYPE 4A)

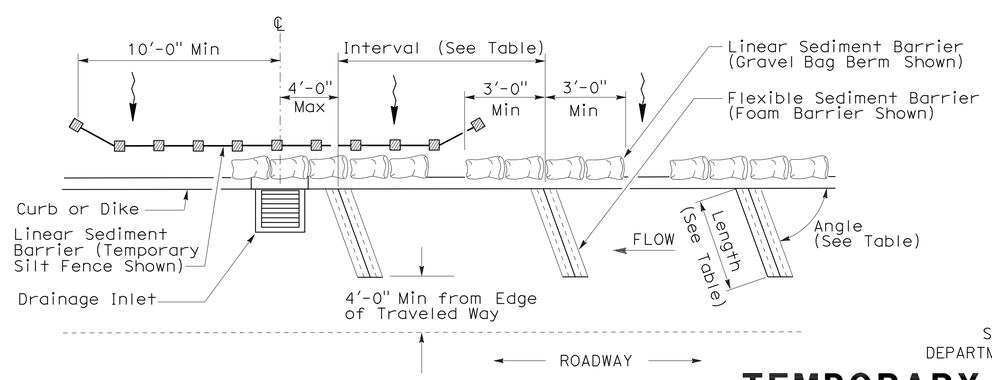

PLAN

TEMPORARY DRAINAGE INLET PROTECTION (TYPE 4B) FLEXIBLE SEDIMENT BARRIER

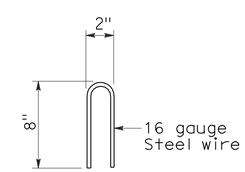

STAPLE DETAIL

STATE OF CALIFORNIA
DEPARTMENT OF TRANSPORTATION

TEMPORARY WATER POLLUTION CONTROL DETAILS (TEMPORARY DRAINAGE INLET PROTECTION)

NO SCALE

NSP T63 DATED AUGUST 15, 2008 SUPPLEMENTS THE STANDARD PLANS BOOK DATED MAY 2006.

NEW STANDARD PLAN NSP T63

2006 NEW STANDARD PLAN NSP T63

7-11-08

DIST	COUNTY	ROUTE	POST MILES TOTAL PROJECT	SHEET NO.	TOTAL SHEETS
03	ED	50	78.9/79.5	73	78

LICENSED LANDSCAPE ARCHITECT

August 15, 2008
PLANS APPROVAL DATE

The State of California or its officers or agents shall not be responsible for the accuracy or completeness of electronic copies of this plan sheet.

LICENSED LANDSCAPE ARCHITECT — Robert B. Schott — Signature — 11-04-08 Renewal Date — 08-11-08 Date — STATE OF CALIFORNIA

To accompany plans dated 11-7-11

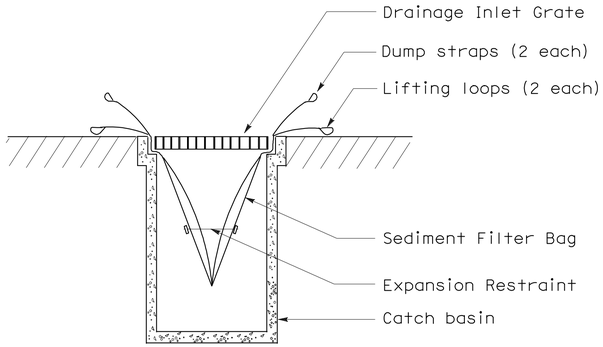

SECTION B-B

SEDIMENT FILTER BAG DETAIL

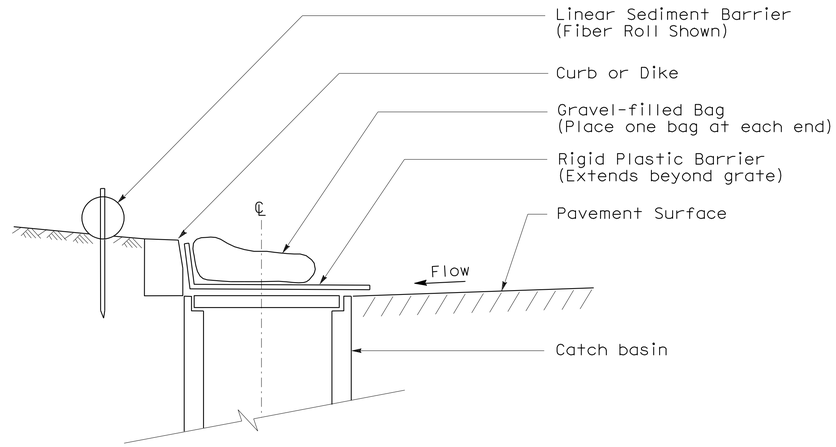

SECTION

TEMPORARY DRAINAGE INLET PROTECTION (TYPE 6A) (CATCH BASIN WITH GRATE)

NOTES:

1. See Standard Plan T51 for Temporary Silt Fence.
2. Dimensions may vary to fit field conditions.

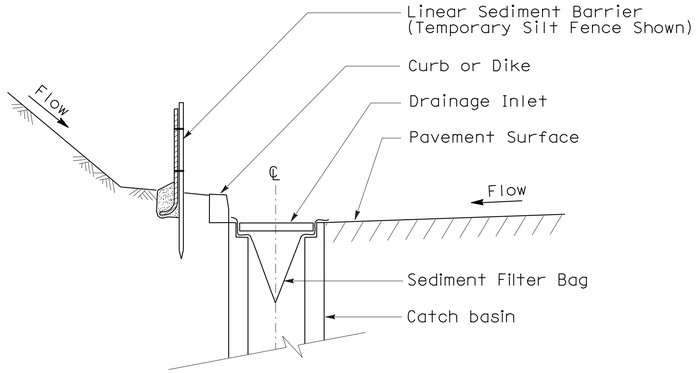

SECTION A-A

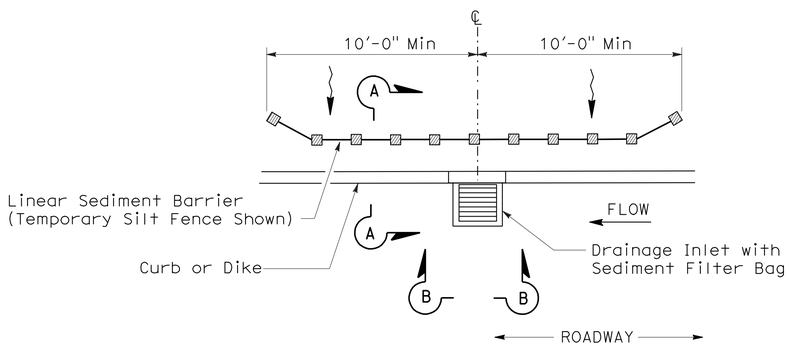

PLAN

TEMPORARY DRAINAGE INLET PROTECTION (TYPE 5) (SEDIMENT FILTER BAG)

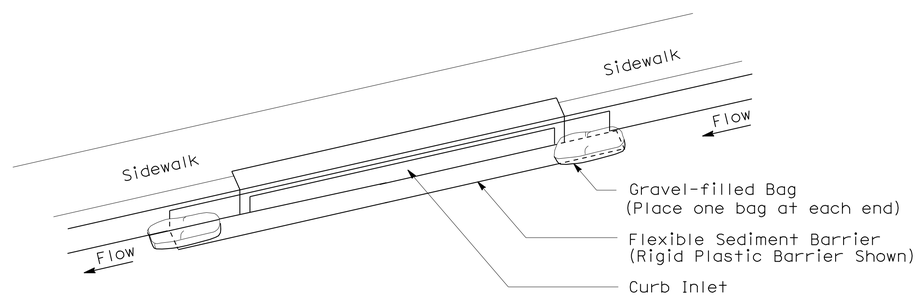

PERSPECTIVE

TEMPORARY DRAINAGE INLET PROTECTION (TYPE 6B) (CURB INLET WITHOUT GRATE)

STATE OF CALIFORNIA
DEPARTMENT OF TRANSPORTATION

TEMPORARY WATER POLLUTION CONTROL DETAILS (TEMPORARY DRAINAGE INLET PROTECTION)

NO SCALE

NSP T64 DATED AUGUST 15, 2008 SUPPLEMENTS
THE STANDARD PLANS BOOK DATED MAY 2006.

NEW STANDARD PLAN NSP T64

2006 NEW STANDARD PLAN NSP T64

DIST	COUNTY	ROUTE	POST MILES TOTAL PROJECT	SHEET NO.	TOTAL SHEETS
03	ED	50	78.9/79.5	74	78

REGISTERED ELECTRICAL ENGINEER

October 5, 2007
PLANS APPROVAL DATE

REGISTERED PROFESSIONAL ENGINEER Jeffery G. McRae No. E14512 Exp. 6-30-08 ELECTRICAL STATE OF CALIFORNIA

The State of California or its officers or agents shall not be responsible for the accuracy or completeness of electronic copies of this plan sheet.

To accompany plans dated 11-7-11

2006 REVISED STANDARD PLAN RSP ES-1A

ELECTROLIERS

STANDARD TYPES
15, 15D
15 STRUCTURE
21, 21D STRUCTURE
30
31
32
35
36-20A

High mast light pole

Double Arm lighting standard

Existing electrolier

Electrolier foundation (Future installation)

NOTES:

1. Luminaires shall be 310 W HPS when installed on Type 21, 21D, 30, 31, 32, 35 and 36-20A Standards, unless otherwise specified. Luminaires shall be 200 W HPS when installed on other type standards or poles, unless otherwise specified.
2. Luminaires shall be the cutoff type, ANSI Type Ⅲ medium cutoff lighting distribution, unless otherwise specified.
3. Variations noted adjacent to symbol on project plans.

Electrolier (see project notes or project plans)

Luminaire on wood pole

STANDARD NOTES:

- AB — Abandon. If applied to conduit, remove conductors.
- BC — Install pull box in existing conduit run.
- BP — Pedestrian barricade, type as indicated on plan.
- CB — Install conduit into existing pull box.
- CC — Connect new and existing conduit. Remove existing conductors and install conductors as indicated.
- CF — Conduit to remain for future use. Remove conductors. Install pull wire or rope.
- DH — Detector handhole.
- FA — Foundation to be abandoned.
- IS — Install sign on signal mast arm.
- NS — No slip base on standard.
- PEC — Photoelectric control.
- PEU — Photoelectric unit.
- RC — Equipment or material to be removed and become the property of the Contractor.
- RE — Remove electrolier, fuses and ballast. Tape ends of conductors.
- RL — Relocate equipment.
- RR — Remove and reuse equipment.
- RS — Remove and salvage equipment.
- SC — Splice new to existing conductors.
- SD — Service disconnect.
- SF — Standard to remain for future use. Remove luminaire, pole conductors, fuses and ballast.
- TSP — Telephone service point.

ABBREVIATIONS AND EQUIPMENT DESIGNATIONS

PROPOSED	EXISTING	
BBS	bbs	Battery backup system
BC	bc	Bolt circle
C	C	Conduit
CCTV	cctv	Closed circuit television
CKT	ckt	Circuit
CMS	cms	Changeable message sign
DLC	dlc	Loop detector lead-in cable
EMS	ems	Extinguishable message sign
EVC	evc	Emergency vehicle cable
EVD	evd	Emergency vehicle detector
FB	fb	Flashing beacon
FBCA	fbca	Flashing beacon control assembly
FBS	fbs	Flashing beacon with slip base
FO	fo	Fiber optic
G	G	Ground (Equipment Grounding Conductor)
GFCI	GFCI	Ground fault circuit interrupt
HAR	har	Highway advisory radio
HEX	hex	Hexagonal
HPS	hps	High pressure sodium
IISNS	iisns	Internally illuminated street name sign
ISL	isl	Induction sign lighting
LED	led	Light emitting diode
LMA	lma	Luminaire mast arm
LPS	lps	Low pressure sodium
LTG	ltg	Lighting
LUM	lum	Luminaire
MAT	mat	Mast arm mounting vehicle signal faces, top attachment
MAS	mas	Mast arm mounting vehicle signal faces, side attachment
MAS-4A	mas-4A	Mast arm mounting vehicle signal faces, side attachment - 4 signal section
MAS-4B	mas-4B	
MAS-4C	mas-4C	
MAS-5A	mas-5A	Mast arm mounting vehicle signal faces, side attachment - 5 signal section
MAS-5B	mas-5B	
MC	mc	Mercury contactor
M/M	m/m	Multiple to multiple transformer
MT	mt	Conduit with pull wire or rope only
MTG	mtg	Mounting
	mv	Mercury vapor lighting fixture
N	N	Neutral (Grounded Conductor)
NC	NC	Normally closed
NO	NO	Normally open
PB	pb	Pull box
PEC	pec	Photoelectric control (Type Ⅰ, Ⅱ, Ⅲ, Ⅳ or Ⅴ as shown)
PED	ped	Pedestrian
PEU	peu	Photoelectric unit
PPB	ppb	Pedestrian push button
RL		Relocated equipment
RM	rm	Ramp metering
SB	sb	Slip base
SIC	sic	Signal interconnect cable
SIG	sig	Signal
SMA	sma	Signal mast arm
SNS	sns	Street name sign
SP	sp	Service point
TDC	tdc	Telephone demarcation cabinet
TMS	tms	Traffic monitoring station
TOS	tos	Traffic Operations System
VEH	veh	Vehicle
XFMR	xfmr	Transformer
COMM	comm	Communication
RWIS	rwis	Roadway weather information system

SOFFIT AND WALL MOUNTED LUMINAIRES

Pendant, 70 W HPS unless otherwise specified.

Flush, 70 W HPS unless otherwise specified.

Wall surface, 70 W HPS unless otherwise specified.

Existing soffit or wall luminaire to remain unmodified.

Existing soffit or wall luminaire to be modified as specified.

NOTE:

Arrow indicates "street side" of luminaire.

STATE OF CALIFORNIA
DEPARTMENT OF TRANSPORTATION

ELECTRICAL SYSTEMS (SYMBOLS AND ABBREVIATIONS)

NO SCALE

RSP ES-1A DATED OCTOBER 5, 2007 SUPERSEDES STANDARD PLAN ES-1A DATED MAY 1, 2006 - PAGE 400 OF THE STANDARD PLANS BOOK DATED MAY 2006.

REVISED STANDARD PLAN RSP ES-1A

DIST	COUNTY	ROUTE	POST MILES TOTAL PROJECT	SHEET NO.	TOTAL SHEETS
03	ED	50	78.9/79.5	75	78

REGISTERED ELECTRICAL ENGINEER

October 5, 2007
PLANS APPROVAL DATE

REGISTERED PROFESSIONAL ENGINEER
Jeffery G. McRae
No. E14512
Exp. 6-30-08
ELECTRICAL
STATE OF CALIFORNIA

The State of California or its officers or agents shall not be responsible for the accuracy or completeness of electronic copies of this plan sheet.

To accompany plans dated 11-7-11

CONDUIT

PROPOSED	EXISTING	
		Lighting Conduit, unless otherwise indicated or noted
		Traffic signal conduit
C	c	Communication conduit
T	t	Telephone conduit
F	f	Fire alarm conduit
FO	fo	Fiber optic conduit
		Conduit termination (RSP ES-9A C)
R	r	Conduit riser in/on structure or service pole

SERVICE EQUIPMENT

PROPOSED	EXISTING	
OH	oh	Overhead lines
U	U	Wood pole "U" indicates utility owned
		Pole guy with anchor
		Utility transformer - ground mounted
III		Service equipment enclosure type
		Service equipment enclosure door indicates front of enclosure
T	t	Telephone demarcation cabinet

POLE-MOUNTED SERVICE DESIGNATION

Type of installation

TYPE H SERVICE - 28'-10" ← Pole height above grade

ILLUMINATED OVERHEAD SIGN

PROPOSED	EXISTING	
		Overhead sign - Single post
		Overhead sign - Two post
		Overhead sign - Mounted on structure
		Overhead sign with electrolier

SIGNAL EQUIPMENT

PROPOSED	EXISTING	
		Pedestrian signal face
		Pedestrian push button post
		Pedestrian barricade
		Vehicle signal face (with backplate, 3-Section: red, yellow and green)
		Vehicle signal face with angle visors
PV	PV	Modifications of basic symbols: "L" indicates all non-arrow sections louvered "LG" indicates louvered green section only "PV" indicates 12" programmed visibility sections "8" indicates all 8" sections (only when specified)
		Type 15TS and Vehicle signal face
		Vehicle signal face with red, yellow and green left arrow sections
		Vehicle signal face with red and yellow sections and up green arrow
		Vehicle signal face (5 Section) with red, yellow and green sections and yellow and green right arrows
		Type 1 Standard and attached vehicle signal faces
		Standard with signal mast arm only and attached vehicle signal faces and internally illuminated street name sign
		Type 33 Standard, Left-turn vehicle signal face and sign
		Standard with luminaire and signal mast arms and attached vehicle signal faces
		Cantilever flashing beacon Type 9 Frame, with a sign unless otherwise specified or indicated
		Type 15-FBS Standard with two vehicle signal face sections with lens, backplate and visor with a sign
R	Y	Flashing beacon. One vehicle signal face section with lens, backplate and visor. "R" indicates red indication, "Y" indicates yellow indication
		Controller assembly. Door indicates front of cabinet

SIGNAL EQUIPMENT Cont

PROPOSED	EXISTING	
		Guard post
		Type 1 Standard with "Meter On" sign
		Emergency Vehicle detector

NOTES:

1. All signal sections shall be 12" unless shown otherwise.
2. Signal heads shall be provided with backplates unless shown otherwise.
3. Signal indication shall be LED.

STATE OF CALIFORNIA
DEPARTMENT OF TRANSPORTATION

ELECTRICAL SYSTEMS (SYMBOLS AND ABBREVIATIONS)

NO SCALE

RSP ES-1B DATED OCTOBER 5, 2007 SUPERCEDES STANDARD PLAN ES-1B
DATED MAY 1, 2006 - PAGE 401 OF THE STANDARD PLANS BOOK DATED MAY 2006.

REVISED STANDARD PLAN RSP ES-1B

2006 REVISED STANDARD PLAN RSP ES-1B

DIST	COUNTY	ROUTE	POST MILES TOTAL PROJECT	SHEET NO.	TOTAL SHEETS
03	ED	50	78.9/79.5	76	78

REGISTERED ELECTRICAL ENGINEER

October 5, 2007
PLANS APPROVAL DATE

REGISTERED PROFESSIONAL ENGINEER Jeffery G. McRae No. E14512 Exp. 6-30-08 ELECTRICAL STATE OF CALIFORNIA

The State of California or its officers or agents shall not be responsible for the accuracy or completeness of electronic copies of this plan sheet.

To accompany plans dated 11-7-11

EQUIPMENT IDENTIFICATION

ILLUMINATED SIGN IDENTIFICATION NUMBER:

Sign No. 12345

10 ISL SCI 1.0

- Sign number - Place on post or structure
- Transformer rating (kVA)
- Lighting control type
- Number and type of fixtures

Do NOT place on standard or structure

ELECTROLIER OR EQUIPMENT IDENTIFICATION NUMBER:

12345 - 15'-0"

- Mast arm length, if shown. Do not place on standard or structure.
- Equipment number - Place on standard or structure. Existing equipment numbers are shown in parenthesis

CONDUIT AND CONDUCTOR IDENTIFICATION:

1½"C, 2#10, 15#14, 2 DLC

- Number and size of conductors and cables
- Size of conduit in inches

Ø1, Ø2, Ø2P, etc.	Traffic phase identification for signal faces, detectors and phase diagrams
1 2 3	Project note numbers
A B C	Equipment description, installation or item numbers
1 2 3	Conduit run numbers

SIGNAL AND LIGHTING STANDARD (TYPICAL DESIGNATION):

19A - 3 - 100

- Wind velocity = 100 mph
- Case 3 arm loading
- Standard type
- Standard Plan sheet number
- Detail number or letter

MISCELLANEOUS EQUIPMENT

PROPOSED	EXISTING	
CMS	cms	Changeable message sign
		Closed circuit television camera
		Highway advisory radio pole and antenna
EMS	ems	Extinguishable message sign
M V	m v	Detection device M = Microwave sensor V = Video image sensor

WIRING DIAGRAM LEGEND

P	Pole
CB	Circuit breaker
A	Ampere
V	Volt
M	Metered
UM	Unmetered
NB	Neutral bus
GB	Ground bus
G	Equipment grounding conductor
N	Grounded conductor (Neutral)

- External conductor
- Conductor or bus
- Tie point
- Contactor coil
- Contactor, Contact NO
- Terminal blocks
- Contactor, Contact NC
- Enclosure bond
- Grounding electrode
- Circuit breaker
- Receptacle

PULL BOXES

PROPOSED EXISTING

Pull box-No. 5 unless otherwise indicated or noted.

3 9A(21)

Pull box-Additional designations or descriptions

3	= No. 3½ pull box
5	= No. 5 pull box
6	= No. 6 pull box
7	= No. 7 (Ceiling pull box)
8	= No. 8 (Pendant soffit pull box)
9	= No. 9 pull box
9A	= No. 9A pull box

(C)	= Communications pull box
(E)	= Pull box with extension
(S)	= Sprinkler control pull box
(21)	= Anchor bolts and conduit for future installation of Type 21 Standard
(T)	= Traffic pull box

VEHICLE DETECTORS

5 J 9 U

- Vehicle detector designation
- U = Upper
- L = Lower
- Slot number in input file
- Input file (I or J)
- Phase

PROPOSED EXISTING

	Type A detector loop. Outline of sawcut shown.
	Type B detector loop. Outline of sawcut shown.
	Type C detector loop. Outline of sawcut shown.
	Type D detector loop. Outline of sawcut shown.
	Type E detector loop. Outline of sawcut shown.
	Type Q detector loop. Outline of sawcut shown.
	Magnetic detector
DH dh	Detector handhole
	Microwave or video detection zone

STATE OF CALIFORNIA
DEPARTMENT OF TRANSPORTATION

ELECTRICAL SYSTEMS (SYMBOLS AND ABBREVIATIONS)

NO SCALE

RSP ES-1C DATED OCTOBER 5, 2007 SUPERCEDES STANDARD PLAN ES-1C DATED MAY 1, 2006 - PAGE 402 OF THE STANDARD PLANS BOOK DATED MAY 2006.

REVISED STANDARD PLAN RSP ES-1C

2006 REVISED STANDARD PLAN RSP ES-1C

7-10-07

DIST	COUNTY	ROUTE	POST MILES TOTAL PROJECT	SHEET NO.	TOTAL SHEETS
03	ED	50	78.9/79.5	77	78

REGISTERED ELECTRICAL ENGINEER

October 5, 2007
PLANS APPROVAL DATE

REGISTERED PROFESSIONAL ENGINEER Jeffery G. McRae No. E14512 Exp. 6-30-08 ELECTRICAL STATE OF CALIFORNIA

The State of California or its officers or agents shall not be responsible for the accuracy or completeness of electronic copies of this plan sheet.

To accompany plans dated 11-7-11

2006 REVISED STANDARD PLAN RSP ES-5A

LOOP INSTALLATION PROCEDURE

1. Loops shall be centered in lanes.
2. Saw slots in pavement for loop conductors as shown in details.
3. Distance between side of loop and a lead-in saw cut from adjacent detectors shall be 2'-0" minimum. Distance between lead-in saw cuts shall be 6" minimum.
4. Bottom of saw slot shall be smooth with no sharp edges.
5. Slots shall be washed until clean, blown out and thoroughly dried before installing loop conductors.
6. Adjacent loops on the same sensor unit channel shall be wound in opposite directions.
7. Identify and tag loop circuit pairs in the pull box with loop number, start (S) and finish (F) of conductor. Identify and tag lead-in-cable with sensor number and phase.
8. Install loop conductor in slot using a 3/16" to 1/4" thick wood paddle. Hold loop conductors with wood paddles (at the bottom of the sawed slot) during sealant placement.
9. No more than 2 twisted pairs shall be installed in one sawed slot.
10. Allow additional 5'-0" of slack length of conductor for the lead-in run to pull box.
11. The additional length of each conductor for each loop shall be twisted together into a pair (6 turns per 3'-4" minimum) before being placed in the slot and conduit leading to pull box.
12. Test each loop circuit for continuity, circuit resistance and insulation resistance at the pull box before filling slots.
13. Fill slots as shown in details.
14. Splice loop conductors to lead-in-cable. Splices shall be soldered.
15. End of lead-in-cable and Type 2 loop conductor shall be waterproofed prior to installing in conduit to prevent moisture from entering the cable.
16. Lead-in-cable shall not be spliced between the pull box and the controller cabinet terminals.
17. Test each loop circuit for continuity, circuit resistance and insulation resistance at the controller cabinet location.
18. Where loop conductors are not to be spliced to a lead-in-cable, the ends of the conductors shall be taped and waterproofed with electrical insulating coating.

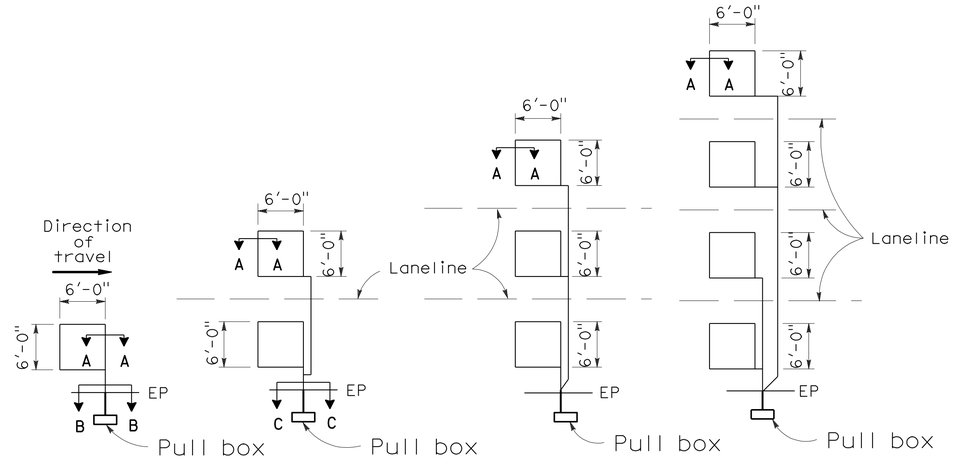

TYPE 1A INSTALLATION | TYPE 2A INSTALLATION | TYPE 3A INSTALLATION | TYPE 4A INSTALLATION

SAWCUT DETAILS

(Type A loop detector configurations illustrated)

1. 1A thru 4A = 1 Type A loop configuration in each lane.
2. 1B thru 4B = 1 Type B loop configuration in each lane.
3. 1C = 1 Type C loop configuration entering lanes as required.
4. 1D thru 4D = 1 Type D loop configuration in each lane.
5. 1E thru 4E = 1 Type E loop configuration in each lane.
6. 1Q thru 4Q = 1 Type Q loop configuration in each lane. (Use Type A, B, C, D, E or Q loop detector configurations only when specified or shown on plans)

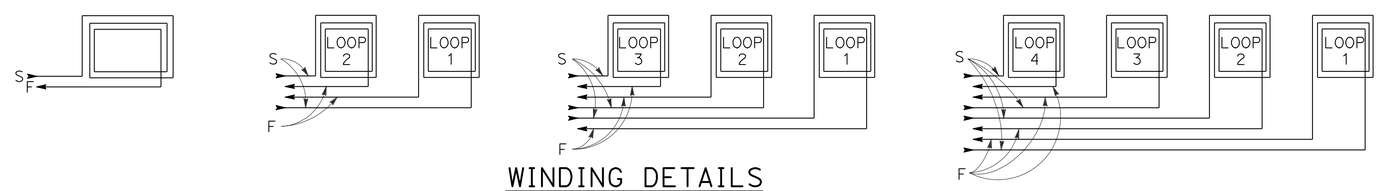

WINDING DETAILS

See Notes 6 and 7

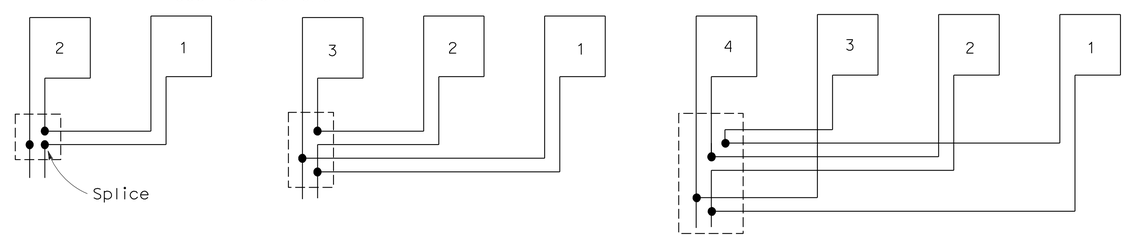

TYPICAL LOOP CONNECTIONS

(Dashed lines represent the pull box)

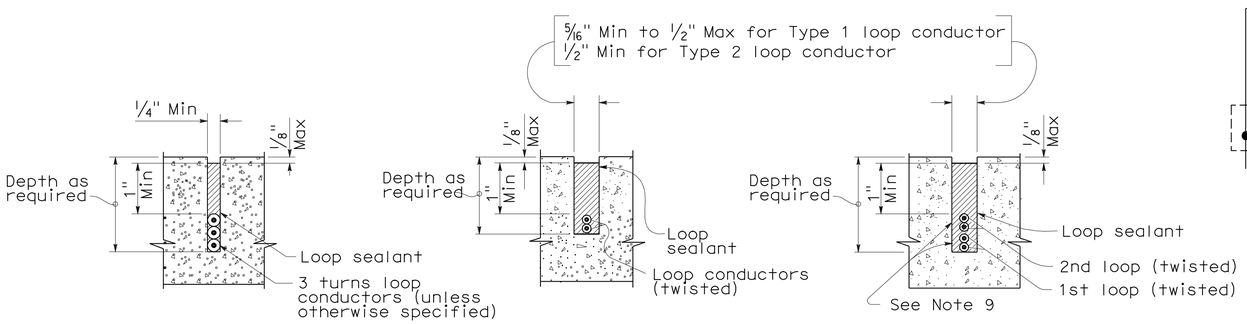

SECTION A-A | SECTION B-B | SECTION C-C

SLOT DETAILS - TYPE 1 AND TYPE 2 LOOP CONDUCTOR

STATE OF CALIFORNIA
DEPARTMENT OF TRANSPORTATION

ELECTRICAL SYSTEMS (DETECTORS)

NO SCALE

RSP ES-5A DATED OCTOBER 5, 2007 SUPERCEDES STANDARD PLAN ES-5A DATED MAY 1, 2006 - PAGE 423 OF THE STANDARD PLANS BOOK DATED MAY 2006.

REVISED STANDARD PLAN RSP ES-5A

DIST	COUNTY	ROUTE	POST MILES TOTAL PROJECT	SHEET NO.	TOTAL SHEETS
03	ED	50	78.9/79.5	78	78

REGISTERED CIVIL ENGINEER

October 5, 2007
PLANS APPROVAL DATE

REGISTERED PROFESSIONAL ENGINEER
Stanley P. Johnson
No. C57793
Exp. 3-31-08
CIVIL
STATE OF CALIFORNIA

The State of California or its officers or agents shall not be responsible for the accuracy or completeness of electronic copies of this plan sheet.

To accompany plans dated 11-7-11

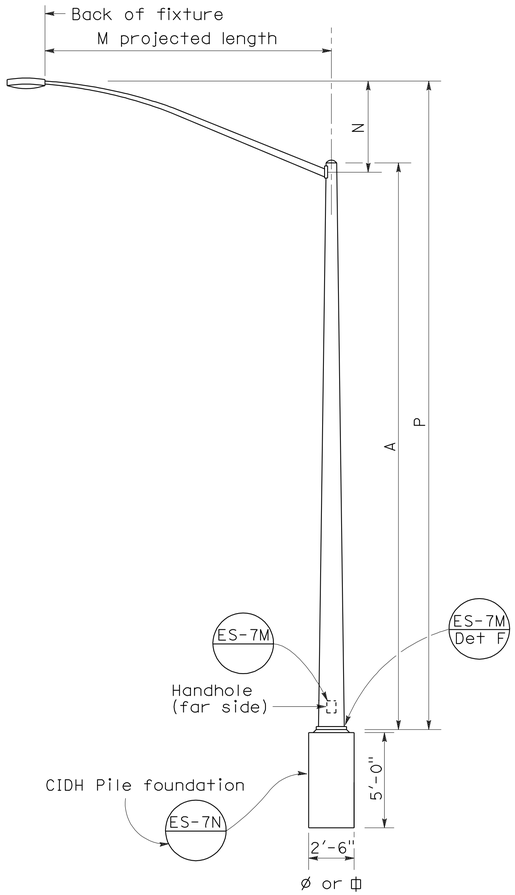

ELEVATION
TYPE 15 AND TYPE 21

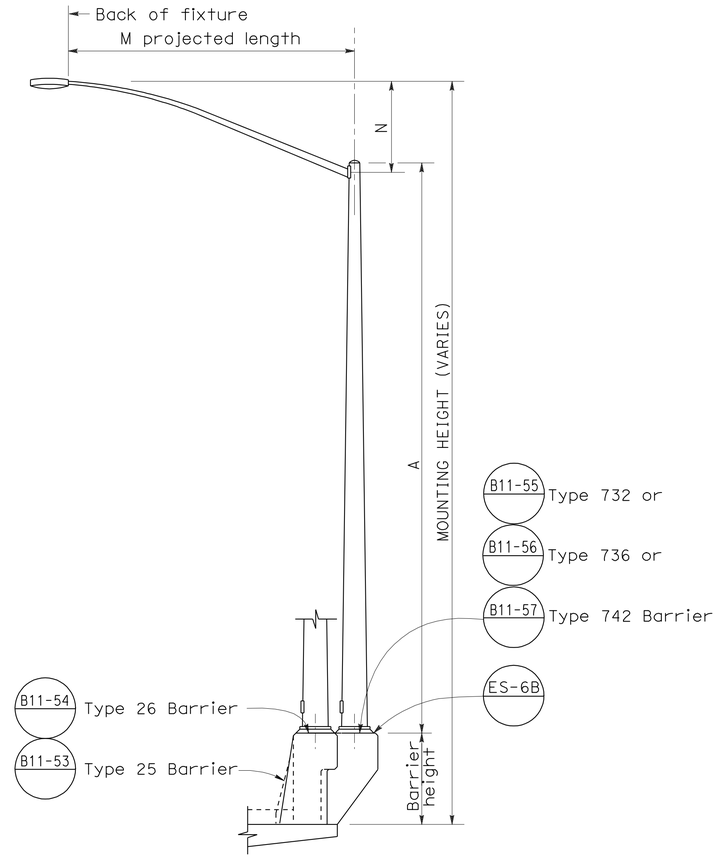

ELEVATION
TYPE 15 AND TYPE 21 BARRIER RAIL MOUNTED

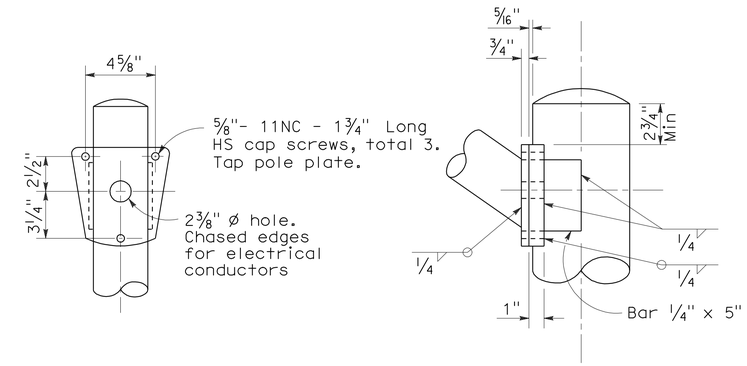

DETAIL R
LUMINAIRE ARM CONNECTION

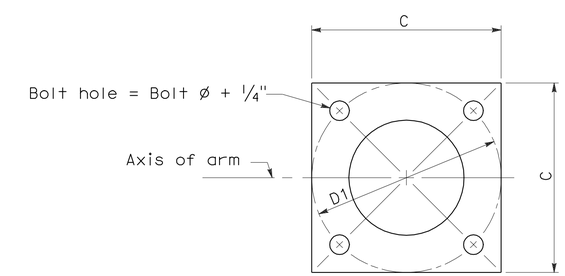

BASE PLATE

POLE TYPE	POLE DATA				BASE PLATE DATA				LUMINAIRE ARM
	A Height	Min OD Base	Min OD Top	Wall Thickness	C	D1 Bolt Circle	Thickness	Anchor Bolts Size	
15	30'	8"	3 7/8"	0.1196"	1'-0"	1'-0"	1"	1" ø x 3'-0" x 4"*	6' - 15' [12']
21	35'	8 5/8"	3 7/8"	0.1196"	1'-0"	1'-0"	1"	1 1/4"ø x 3'-0" x 4"*	6' - 15' [12']

* For barrier rail bolts, see Standard Plan ES-6B.

LUMINAIRE ARM DATA					
M Projected Length	N Rise	Min OD At Pole	Nominal Thickness	P Type 15	P Type 21
6'-0"	2'-0"±	3 1/4"	0.1196"	31'-6"±	36'-6"±
8'-0"	2'-6"±	3 1/2"	0.1196"	32'-0"±	37'-0"±
10'-0"	3'-3"±	3 7/8"	0.1196"	32'-9"±	37'-9"±
12'-0"	4'-3"±	3 7/8"	0.1196"	33'-9"±	38'-9"±
15'-0"	4'-9"±	4 1/4"	0.1196"	34'-3"±	39'-3"±

NOTES:

1. ☐ Indicates arm length to be used unless otherwise noted on the plans.
2. For Type 15-SB, use Type 15 standard with Type 30 slip base plate details, see Standard Plan ES-6F.
3. For additional notes, see Standard Plan ES-7M and ES-7N.

STATE OF CALIFORNIA
DEPARTMENT OF TRANSPORTATION

ELECTRICAL SYSTEMS (LIGHTING STANDARD TYPES 15 AND 21)

NO SCALE

RSP ES-6A DATED OCTOBER 5, 2007 SUPERCEDES STANDARD PLAN ES-6A DATED MAY 1, 2006 - PAGE 427 OF THE STANDARD PLANS BOOK DATED MAY 2006.

REVISED STANDARD PLAN RSP ES-6A

2006 REVISED STANDARD PLAN RSP ES-6A

7-10-07