INDEX OF PLANS

SHEET No.	DESCRIPTION
1	TITLE AND LOCATION MAP
2-3	TYPICAL CROSS SECTIONS
4	PROJECT CONTROL
5-9	LAYOUTS
20-45	CONSTRUCTION DETAILS
46-48	TEMPORARY WATER POLLUTION CONTROL DETAILS AND QUANTITIES
49-106	DRAINAGE PLANS, PROFILES, DETAILS AND QUANTITIES
107	CONSTRUCTION AREA SIGNS
108	MOTORIST INFORMATION PLAN
109-123	PAVEMENT DELINEATION AND SIGN PLANS
124	PAVEMENT DELINEATION DETAILS AND QUANTITIES
125-128	SIGN DETAILS AND QUANTITES
129-131	SUMMARY OF QUANTITIES
132-153	EROSION CONTROL LEGEND, PLANS, DETAILS AND QUANTITIES
154-164	REVISED STANDARD PLANS

THE STANDARD PLANS LIST APPLICABLE TO THIS CONTRACT IS INCLUDED IN THE NOTICE TO BIDDERS AND SPECIAL PROVISIONS BOOK.

STATE OF CALIFORNIA

DEPARTMENT OF TRANSPORTATION

ACSTP-P089(112)

Dist	COUNTY	ROUTE	POST MILES TOTAL PROJECT	SHEET No.	TOTAL SHEETS
03	ED	89	13.8/18.0	1	164

PROJECT PLANS FOR CONSTRUCTION ON

STATE HIGHWAY

IN EL DORADO COUNTY
NEAR SOUTH LAKE TAHOE
FROM CASCADE ROAD TO UPPER EMERALD BAY ROAD

TO BE SUPPLEMENTED BY STANDARD PLANS DATED 2010

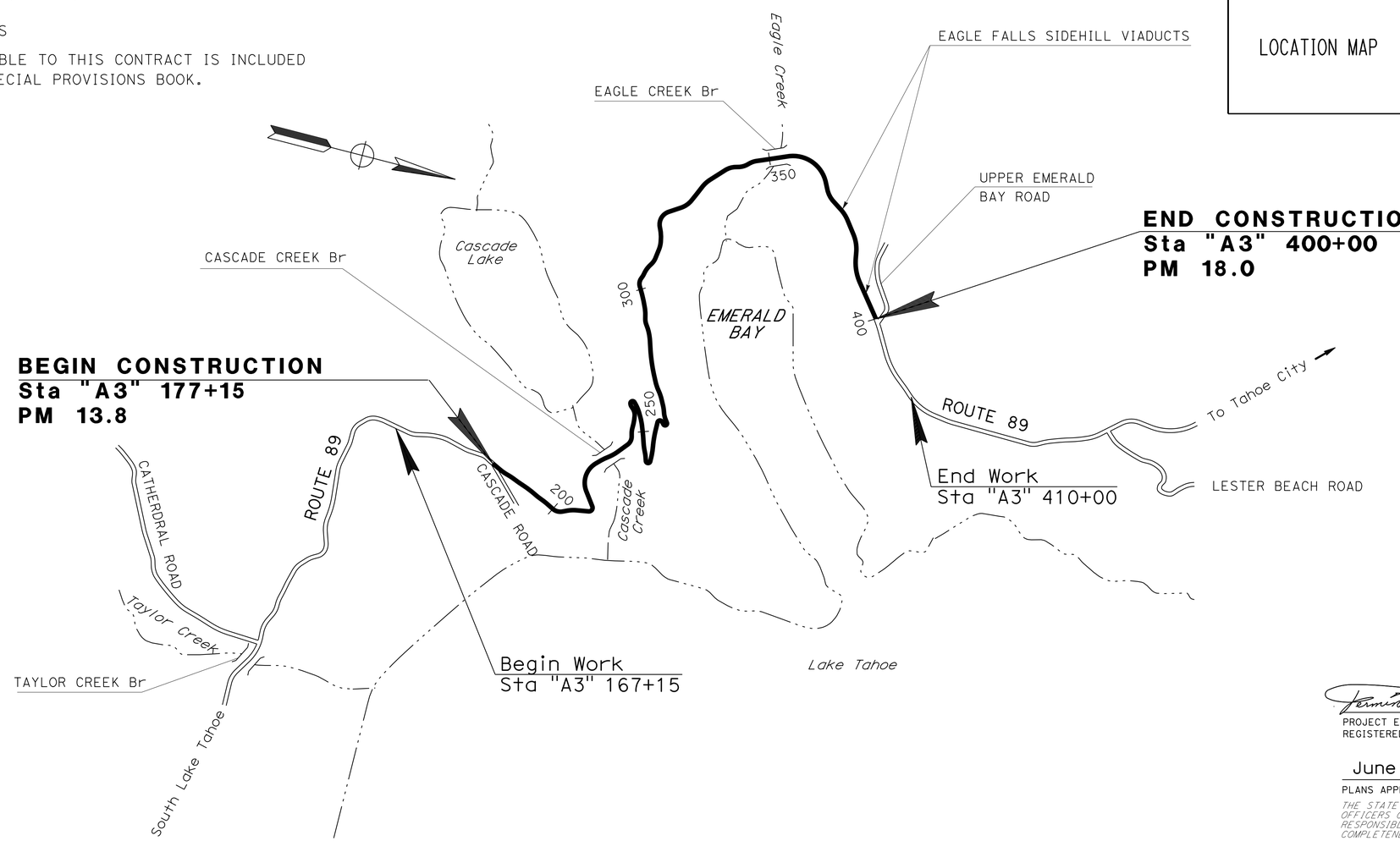

NO SCALE

THE CONTRACTOR SHALL POSSESS THE CLASS (OR CLASSES) OF LICENSE AS SPECIFIED IN THE "NOTICE TO BIDDERS."

PROJECT MANAGER: MIKE BARTLETT

DESIGN ENGINEER: CARLOS A. PORTILLO

Fermin Barriga B. 6-9-14

PROJECT ENGINEER REGISTERED CIVIL ENGINEER — DATE

REGISTERED PROFESSIONAL ENGINEER — FERMIN BARRIGA — No. C47047 — Exp. 12-31-15 — CIVIL — STATE OF CALIFORNIA

June 16, 2014

PLANS APPROVAL DATE

THE STATE OF CALIFORNIA OR ITS OFFICERS OR AGENTS SHALL NOT BE RESPONSIBLE FOR THE ACCURACY OR COMPLETENESS OF SCANNED COPIES OF THIS PLAN SHEET.

CONTRACT No.	03-1A8434
PROJECT ID	0300000224

LAST REVISION — DATE PLOTTED => 18-MAR-2015 — TIME PLOTTED => 15:07 — 04-09-14

Dist	COUNTY	ROUTE	POST MILES TOTAL PROJECT	SHEET No.	TOTAL SHEETS
03	ED	89	13.8/18.0	2	164

Fermin Barriga B. 6-9-14
REGISTERED CIVIL ENGINEER DATE

6-16-14
PLANS APPROVAL DATE

REGISTERED PROFESSIONAL ENGINEER
FERMIN BARRIGA
No. C47047
Exp. 12-31-15
CIVIL
STATE OF CALIFORNIA

THE STATE OF CALIFORNIA OR ITS OFFICERS OR AGENTS SHALL NOT BE RESPONSIBLE FOR THE ACCURACY OR COMPLETENESS OF SCANNED COPIES OF THIS PLAN SHEET.

NOTES:

1. DIMENSIONS OF THE PAVEMENT STRUCTURES (STRUCTURAL SECTIONS) ARE SUBJECT TO TOLERANCES SPECIFIED IN THE STANDARD SPECIFICATIONS.
2. EXACT LOCATIONS OF COLD PLANE AC PAVEMENT AND 0.20' HMA (TYPE A) AS SHOWN IN LAYOUT AND Q-1 SHEETS OR AS DIRECTED BY THE ENGINEER.
3. SEE LAYOUTS AND QUANTITY SHEET Q-3 FOR LOCATIONS AND TYPE OF CURB.
4. SEE CONSTRUCTION DETAILS SHEET C-21 FOR CONCRETE LINED DITCH DETAILS.
5. NO COLD PLANE AC PAVEMENT OR HMA (TYPE A) ON CASCADE CREEK BRIDGE, EAGLE CREEK BRIDGE, AND EAGLE FALLS SIDEHILL VIADUCTS.
6. COLD PLANE AC PAVEMENT AND HMA (TYPE A) ON THE EXISTING PAVED PULLOUTS. SEE LAYOUT PLANS FOR LOCATION OF EXISTING PULLOUTS.

STRUCTURAL SECTION

1. Exist
   Var 0.60' - 1.30' HMA
   0.50' AB
2. 0.20' HMA (TYPE A)
   COLD PLANE AC PAVEMENT (0.20' Max)
3. 0.35' HMA (TYPE A)
   1.15' Cl 2 AB
4. Var 0.83' OR 1.00' Cl 2 AB

PAVEMENT CLIMATE REGION

HIGH MOUNTAIN

ABBREVIATIONS

FOW FACE OF WALL

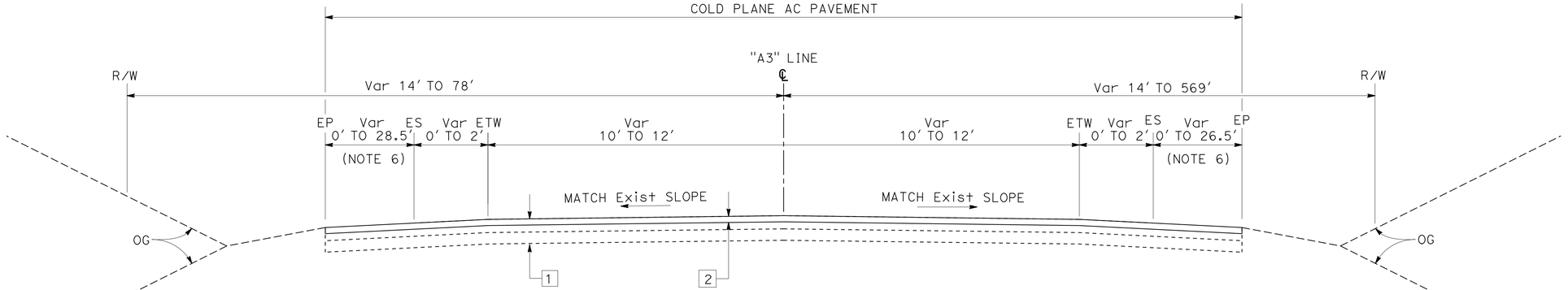

Sta "A3" 177+15.00 TO Sta "A3" 228+65.40
Sta "A3" 229+10.25 TO Sta "A3" 353+10.65
Sta "A3" 354+25.00 TO Sta "A3" 369+69.10
Sta "A3" 396+49.00 TO Sta "A3" 400+00.00
(SEE NOTE 5)

ROUTE 89

TYPICAL CROSS SECTIONS

NO SCALE

X-1

REVISED BY | DATE REVISED
MAHBOOBEH DEILAMI | FERMIN BARRIGA
CALCULATED-DESIGNED BY | CHECKED BY
FUNCTIONAL SUPERVISOR: CARLOS A. PORTILLO

STATE OF CALIFORNIA - DEPARTMENT OF TRANSPORTATION
Caltrans
NORTH REGION
DIVISION OF ENGINEERING

LAST REVISION 04-25-14
DATE PLOTTED => 18-MAR-2015
TIME PLOTTED => 15:07

BORDER LAST REVISED 7/2/2010
USERNAME => s130875
DGN FILE => 0300000224ca001.dgn
RELATIVE BORDER SCALE IS IN INCHES 0 1 2 3
UNIT 0305
PROJECT NUMBER & PHASE 03000002241

Dist	COUNTY	ROUTE	POST MILES TOTAL PROJECT	SHEET No.	TOTAL SHEETS
03	ED	89	13.8/18.0	3	164

Fermin Barriga 6-9-14
REGISTERED CIVIL ENGINEER DATE

6-16-14
PLANS APPROVAL DATE

FERMIN BARRIGA No. C47047 Exp. 12-31-15 CIVIL — REGISTERED PROFESSIONAL ENGINEER — STATE OF CALIFORNIA

THE STATE OF CALIFORNIA OR ITS OFFICERS OR AGENTS SHALL NOT BE RESPONSIBLE FOR THE ACCURACY OR COMPLETENESS OF SCANNED COPIES OF THIS PLAN SHEET.

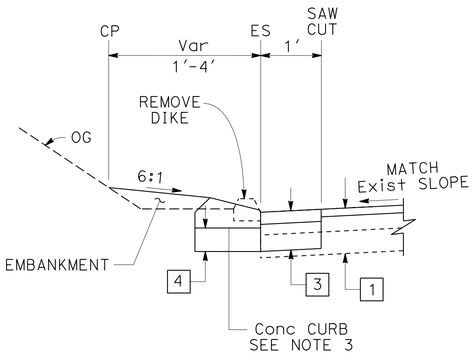

Sta "A3" 177+33.55 TO Sta "A3" 180+50.28 Lt
Sta "A3" 181+17.79 TO Sta "A3" 188+25.00 Lt
Sta "A3" 256+08.58 TO Sta "A3" 257+25.75 Lt
Sta "A3" 342+15.73 TO Sta "A3" 344+52.77 Lt

SIMILAR FOR NB DIRECTION

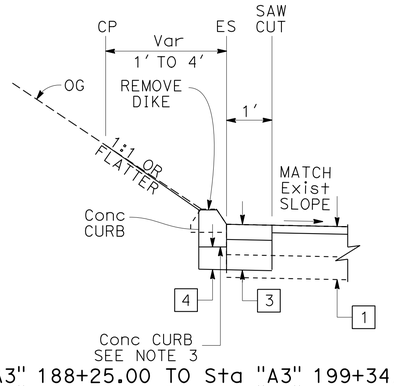

Sta "A3" 188+25.00 TO Sta "A3" 199+34.22 Lt
Sta "A3" 215+91.44 TO Sta "A3" 218+25.00 Rt
Sta "A3" 218+25.00 TO Sta "A3" 220+57.01 Rt
Sta "A3" 267+34.92 TO Sta "A3" 270+26.29 Lt
Sta "A3" 396+49.00 TO Sta "A3" 398+87.93 Lt

SIMILAR FOR NB DIRECTION

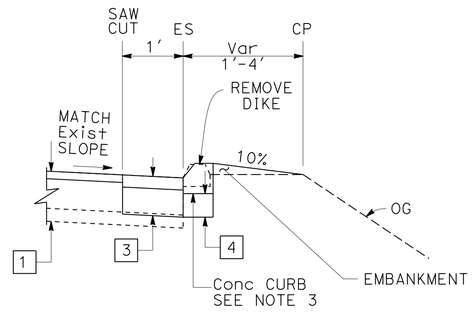

Sta "A3" 228+41.10 TO Sta "A3" 228+66.10 Lt
Sta "A3" 228+38.80 TO Sta "A3" 228+67.06 Rt
Sta "A3" 229+11.58 TO Sta "A3" 229+36.58 Lt
Sta "A3" 229+12.33 TO Sta "A3" 229+37.33 Rt
Sta "A3" 266+84.57 TO Sta "A3" 266+92.48 Rt
Sta "A3" 267+26.18 TO Sta "A3" 267+88.07 Rt
Sta "A3" 289+73.65 TO Sta "A3" 290+72.54 Rt
Sta "A3" 292+96.18 TO Sta "A3" 296+25.00 Rt
Sta "A3" 304+96.06 TO Sta "A3" 305+27.82 Rt
Sta "A3" 305+96.11 TO Sta "A3" 306+13.53 Rt
Sta "A3" 317+05.56 TO Sta "A3" 321+25.00 Rt
Sta "A3" 356+10.81 TO Sta "A3" 358+03.68 Lt

SIMILAR FOR SB DIRECTION

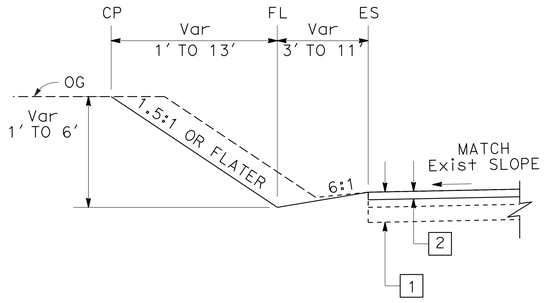

Sta "A3" 180+50.28 TO Sta "A3" 181+17.79 Lt
Sta "A3" 224+50.00 TO Sta "A3" 226+20.00 Lt
Sta "A3" 230+33.00 TO Sta "A3" 239+00.00 Lt
Sta "A3" 230+52.55 TO Sta "A3" 238+00.00 Rt
Sta "A3" 259+25.00 TO Sta "A3" 261+25.00 Lt

Sta "A3" 262+25.00 TO Sta "A3" 263+25.00 Lt
Sta "A3" 263+25.00 TO Sta "A3" 264+57.69 Rt
Sta "A3" 270+44.82 TO Sta "A3" 280+00.00 Lt
Sta "A3" 271+75.00 TO Sta "A3" 273+00.00 Rt
Sta "A3" 352+09.90 TO Sta "A3" 353+00.00 Rt
Sta "A3" 361+25.00 TO Sta "A3" 363+50.00 Rt

SIMILAR FOR NB DIRECTION

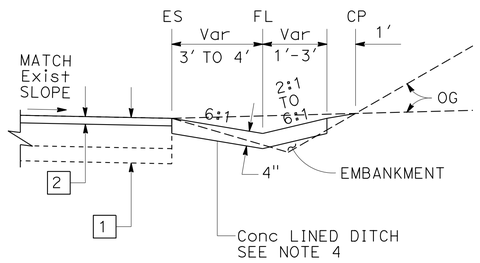

Sta "A3" 270+66.26 TO Sta "A3" 271+75.00 Rt
Sta "A3" 349+75.00 TO Sta "A3" 353+21.56 Lt
Sta "A3" 350+00.00 TO Sta "A3" 352+09.90 Rt
Sta "A3" 363+60.00 TO Sta "A3" 364+15.00 Rt

SIMILAR FOR SB DIRECTION

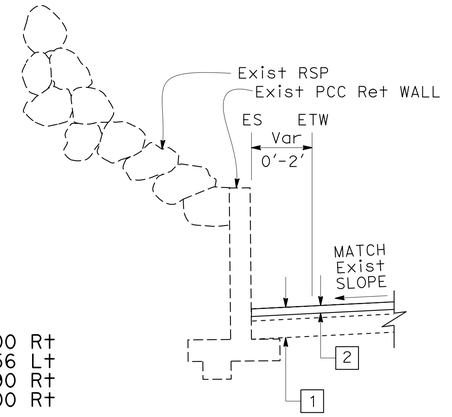

Sta "A3" 199+34.22 TO Sta "A3" 214+19.50 Lt
Sta "A3" 242+62.34 TO Sta "A3" 256+08.58 Lt
Sta "A3" 291+29.59 TO Sta "A3" 297+25.99 Lt
Sta "A3" 326+59.10 TO Sta "A3" 327+18.60 Rt
Sta "A3" 327+86.42 TO Sta "A3" 329+69.74 Rt
Sta "A3" 330+62.00 TO Sta "A3" 335+16.00 Rt
Sta "A3" 341+43.40 TO Sta "A3" 345+23.37 Rt

SIMILAR FOR NB DIRECTION

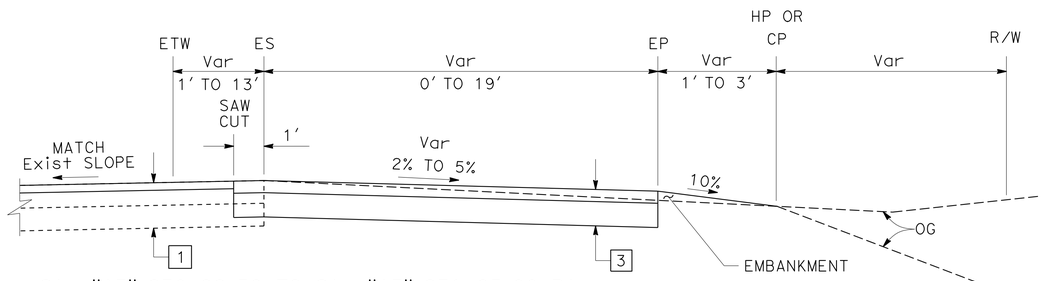

Sta "A3" 230+92.56 TO Sta "A3" 231+65.00 Rt
Sta "A3" 266+92.60 TO Sta "A3" 267+58.40 Lt
Sta "A3" 303+07.71 TO Sta "A3" 305+42.72 Lt

SIMILAR FOR SB DIRECTION

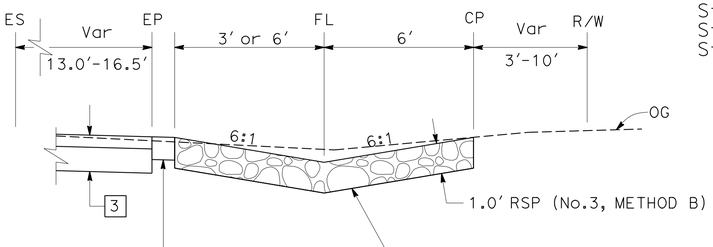

Sta "A3" 231+13.87 TO Sta "A3" 231+45.86 Rt

TYPICAL CROSS SECTIONS

NO SCALE

X-2

ROUTE 89

STATE OF CALIFORNIA - DEPARTMENT OF TRANSPORTATION
NORTH REGION
DIVISION OF ENGINEERING
Caltrans

FUNCTIONAL SUPERVISOR: CARLOS A. PORTILLO
CALCULATED-DESIGNED BY: MAHBOOBEH DEILAMI
CHECKED BY: FERMIN BARRIGA
REVISED BY
DATE REVISED

LAST REVISION DATE PLOTTED => 18-MAR-2015
TIME PLOTTED => 15:07
05-27-14

BORDER LAST REVISED 7/2/2010
USERNAME => s130875
DGN FILE => 0300000224ca002.dgn
RELATIVE BORDER SCALE IS IN INCHES 0 1 2 3
UNIT 0305
PROJECT NUMBER & PHASE 03000002241

NOTES:

1. FOR COMPLETE PROJECT CONTROL AND MONUMENTATION DATA, SEE THE SURVEY RECORDS ON FILE IN THE SURVEYS DEPARTMENT AT THE DISTRICT OFFICE.
2. BEARINGS AND COORDINATES FOR THIS PROJECT ARE BASED ON THE CALIFORNIA COORDINATE SYSTEM OF 1983 (NAD83 1991.35), ZONE 402, U.S. SURVEY FOOT. THE CONTROL SURVEY WAS PERFORMED THROUGH EXISTING CORRIDOR CONTROL AND NEW CONTROL IN 2006. AFTER DIGITAL LEVELS WERE RUN, THROUGH THE TRAVERSED POINTS, A STARNET 3D ADJUSTMENT WAS APPLIED.
3. ELEVATIONS FOR THIS PROJECT ARE BASED ON THE NATIONAL GEODETIC VERTICAL DATUM OF 1929 (NGVD 1929).
4. IN THE EVENT GPS MACHINE CONTROL/GUIDANCE IS USED FOR THIS PROJECT, THE CONTRACTOR MUST CONTACT AND MEET WITH THE SURVEYS DEPARTMENT AT THE DISTRICT OFFICE TO OBTAIN THE CONTROL NECESSARY TO ESTABLISH A PROJECT CALIBRATION COMPATIBLE FOR ALL USERS.
5. CADT MONUMENTS ARE BRASS DISKS IN CONCRETE, TYPICALLY WITH A 2" GALVANIZED PIPE.

ABBREVIATIONS:

CADT - CALIFORNIA DEPARTMENT OF TRANSPORTATION
USC&GS - UNITED STATES COAST & GEODETIC SURVEY

LEGEND:

SECOND ORDER CONTROL STATION

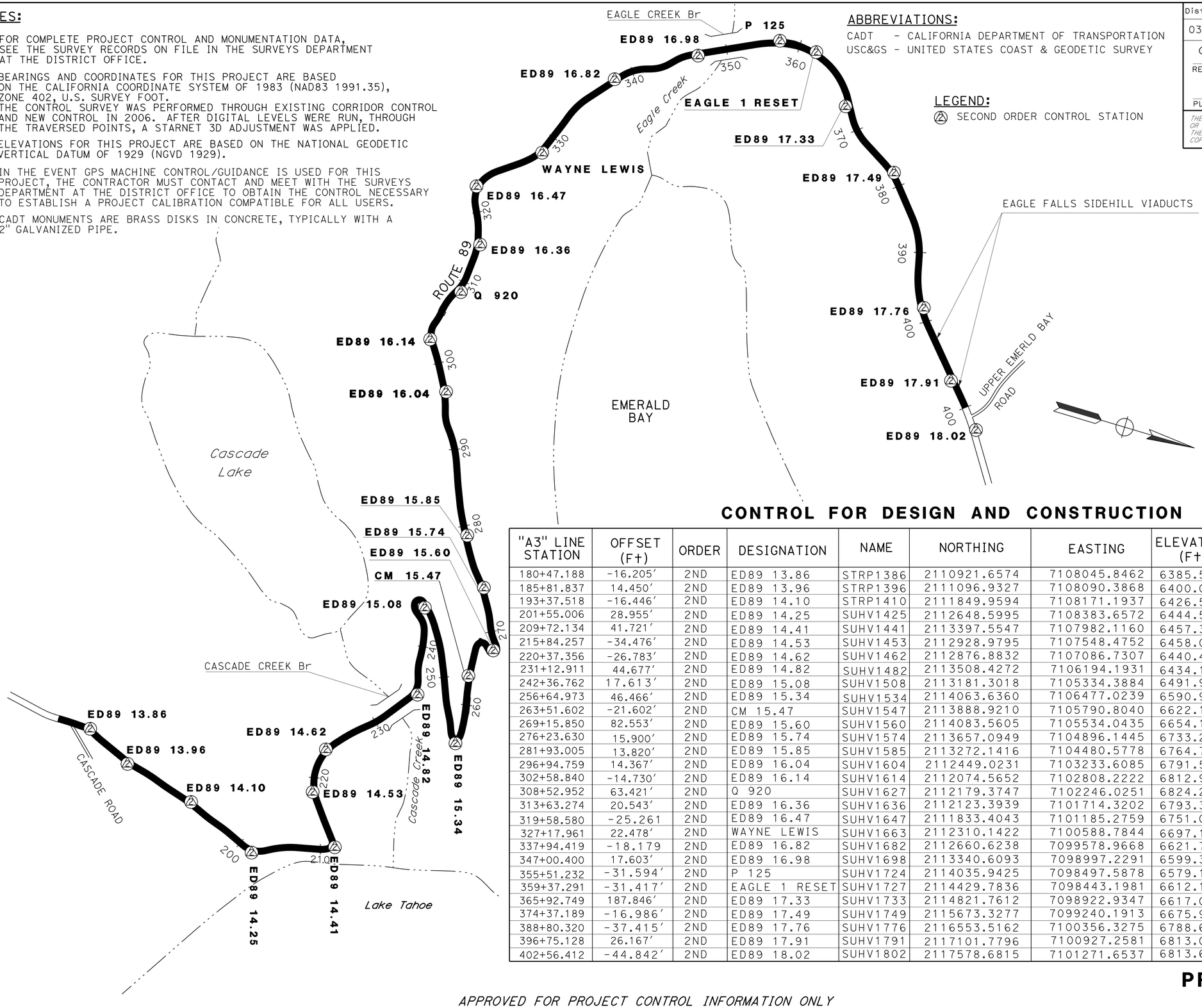

CONTROL FOR DESIGN AND CONSTRUCTION

"A3" LINE STATION	OFFSET (Ft)	ORDER	DESIGNATION	NAME	NORTHING	EASTING	ELEVATION (Ft)	DESCRIPTION
180+47.188	-16.205'	2ND	ED89 13.86	STRP1386	2110921.6574	7108045.8462	6385.594	CADT BRASS DISK IN Conc
185+81.837	14.450'	2ND	ED89 13.96	STRP1396	2111096.9327	7108090.3868	6400.082	CADT BRASS DISK IN Conc
193+37.518	-16.446'	2ND	ED89 14.10	STRP1410	2111849.9594	7108171.1937	6426.506	CADT BRASS DISK IN Conc
201+55.006	28.955'	2ND	ED89 14.25	SUHV1425	2112648.5995	7108383.6572	6444.508	CADT BRASS DISK IN Conc
209+72.134	41.721'	2ND	ED89 14.41	SUHV1441	2113397.5547	7107982.1160	6457.323	CADT BRASS DISK IN Conc
215+84.257	-34.476'	2ND	ED89 14.53	SUHV1453	2112928.9795	7107548.4752	6458.071	CADT BRASS DISK IN Conc
220+37.356	-26.783'	2ND	ED89 14.62	SUHV1462	2112876.8832	7107086.7307	6440.473	CADT BRASS DISK IN Conc
231+12.911	44.677'	2ND	ED89 14.82	SUHV1482	2113508.4272	7106194.1931	6434.147	CADT BRASS DISK IN BOULDER
242+36.762	17.613'	2ND	ED89 15.08	SUHV1508	2113181.3018	7105334.3884	6491.952	CADT BRASS DISK IN Conc
256+64.973	46.466'	2ND	ED89 15.34	SUHV1534	2114063.6360	7106477.0239	6590.912	CADT BRASS DISK IN Conc
263+51.602	-21.602'	2ND	CM 15.47	SUHV1547	2113888.9210	7105790.8040	6622.197	#6 REBAR/PUNCH
269+15.850	82.553'	2ND	ED89 15.60	SUHV1560	2114083.5605	7105534.0435	6654.134	CADT BRASS DISK IN Conc
276+23.630	15.900'	2ND	ED89 15.74	SUHV1574	2113657.0949	7104896.1445	6733.287	CADT BRASS DISK IN Conc
281+93.005	13.820'	2ND	ED89 15.85	SUHV1585	2113272.1416	7104480.5778	6764.717	CADT BRASS DISK IN Conc
296+94.759	14.367'	2ND	ED89 16.04	SUHV1604	2112449.0231	7103233.6085	6791.528	CADT BRASS DISK IN Conc
302+58.840	-14.730'	2ND	ED89 16.14	SUHV1614	2112074.5652	7102808.2222	6812.992	CADT BRASS DISK IN Conc
308+52.952	63.421'	2ND	Q 920	SUHV1627	2112179.3747	7102246.0251	6824.255	USC&GS BM Q 920
313+63.274	20.543'	2ND	ED89 16.36	SUHV1636	2112123.3939	7101714.3202	6793.379	CADT BRASS DISK IN Conc
319+58.580	-25.261	2ND	ED89 16.47	SUHV1647	2111833.4043	7101185.2759	6751.043	CADT BRASS DISK IN Conc
327+17.961	22.478'	2ND	WAYNE LEWIS	SUHV1663	2112310.1422	7100588.7844	6697.181	CADT BRASS DISK IN BOULDER
337+94.419	-18.179	2ND	ED89 16.82	SUHV1682	2112660.6238	7099578.9668	6621.742	CADT BRASS DISK IN Conc
347+00.400	17.603'	2ND	ED89 16.98	SUHV1698	2113340.6093	7098997.2291	6599.386	CADT BRASS DISK IN Conc
355+51.232	-31.594'	2ND	P 125	SUHV1724	2114035.9425	7098497.5878	6579.144	USC&GS BM P 125
359+37.291	-31.417'	2ND	EAGLE 1 RESET	SUHV1727	2114429.7836	7098443.1981	6612.198	CADT BRASS DISK IN BOULDER
365+92.749	187.846'	2ND	ED89 17.33	SUHV1733	2114821.7612	7098922.9347	6617.067	CADT BRASS DISK IN Conc
374+37.189	-16.986'	2ND	ED89 17.49	SUHV1749	2115673.3277	7099240.1913	6675.968	CADT BRASS DISK IN Conc
388+80.320	-37.415'	2ND	ED89 17.76	SUHV1776	2116553.5162	7100356.3275	6788.654	CADT BRASS DISK IN Conc
396+75.128	26.167'	2ND	ED89 17.91	SUHV1791	2117101.7796	7100927.2581	6813.087	CADT BRASS DISK IN Conc
402+56.412	-44.842'	2ND	ED89 18.02	SUHV1802	2117578.6815	7101271.6537	6813.641	CADT BRASS DISK IN Conc

APPROVED FOR PROJECT CONTROL INFORMATION ONLY

PROJECT CONTROL

NO SCALE **PC-1**

Dist	COUNTY	ROUTE	POST MILES TOTAL PROJECT	SHEET No.	TOTAL SHEETS
03	ED	89	13.8/18.0	4	164

Fermin Barriga 6-9-14
REGISTERED CIVIL ENGINEER DATE

6-16-14
PLANS APPROVAL DATE

REGISTERED PROFESSIONAL ENGINEER — FERMIN BARRIGA No. C47047 Exp. 12-31-15 CIVIL — STATE OF CALIFORNIA

THE STATE OF CALIFORNIA OR ITS OFFICERS OR AGENTS SHALL NOT BE RESPONSIBLE FOR THE ACCURACY OR COMPLETENESS OF SCANNED COPIES OF THIS PLAN SHEET.

STATE OF CALIFORNIA - DEPARTMENT OF TRANSPORTATION
NORTH REGION
DIVISION OF ENGINEERING
Caltrans

FUNCTIONAL SUPERVISOR: CARLOS A. PORTILLO
CALCULATED-DESIGNED BY: FERMIN BARRIGA
CHECKED BY: HORACIO PARAS JR
REVISED BY / DATE REVISED:

LAST REVISION — DATE PLOTTED => 18-MAR-2015, TIME PLOTTED => 15:07
01-31-14

BORDER LAST REVISED 7/2/2010
USERNAME => s130875
DGN FILE => 0300000224dc001.dgn
RELATIVE BORDER SCALE IS IN INCHES 0 1 2 3
UNIT 0305
PROJECT NUMBER & PHASE 03000002241

Dist	COUNTY	ROUTE	POST MILES TOTAL PROJECT	SHEET No.	TOTAL SHEETS
03	ED	89	13.8/18.0	5	164

Fermin Barriga P.E. 6-9-14
REGISTERED CIVIL ENGINEER DATE

6-16-14
PLANS APPROVAL DATE

FERMIN BARRIGA No. C47047 Exp. 12-31-15 CIVIL — REGISTERED PROFESSIONAL ENGINEER — STATE OF CALIFORNIA

THE STATE OF CALIFORNIA OR ITS OFFICERS OR AGENTS SHALL NOT BE RESPONSIBLE FOR THE ACCURACY OR COMPLETENESS OF SCANNED COPIES OF THIS PLAN SHEET.

NOTES:

1. FOR ACCURATE RIGHT OF WAY DATA, CONTACT RIGHT OF WAY ENGINEERING AT THE DISTRICT OFFICE.
2. LOCATIONS OF FACILITIES SHOWN ARE APPROXIMATE AND SHALL BE VERIFIED BY THE CONTRACTOR PRIOR TO CONSTRUCTION.
3. FOR TYPE D-4 Mod CURB DETAILS, SEE CONSTRUCTION DETAILS SHEET C-21.

ABBREVIATIONS:

AFTS	ALTERNATIVE FLARED TERMINAL SYSTEM
AITS	ALTERNATIVE IN-LINE TERMINAL SYSTEM
CIPP	CURE-IN-PLACE PIPELINER
CWC	CASCADE WATER COMPANY
DE	DRAINAGE EASEMENT
DOTE	DEPARTMENT OF TRANSPORTATION EASEMENT
HE	HIGHWAY EASEMENT
PTE	PERMIT TO ENTER
STPUD	SOUTH TAHOE PUBLIC UTILITY DISTRICT

LEGEND:

TFESA TEMPORARY FENCE (TYPE ESA)

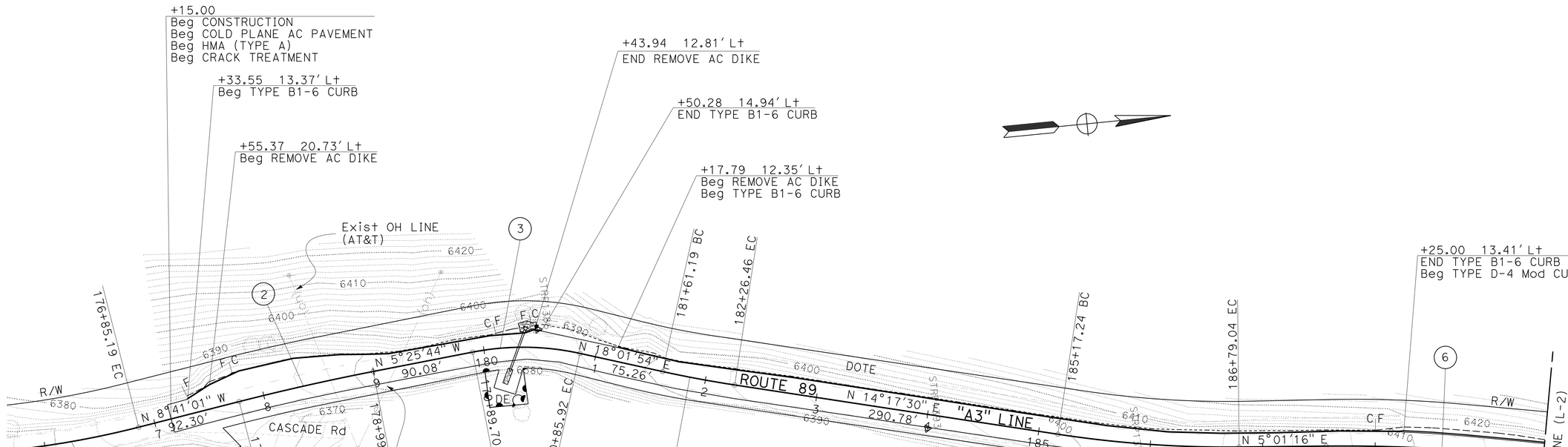

CURVE DATA

No. Ⓐ	R	Δ	T	L
1	800′	11°52′14"	83.17′	165.74′
2	2150′	3°15′17"	61.08′	122.13′
3	235′	23°27′38"	48.80′	96.22′
4	1000′	3°44′23"	32.65′	65.27′
5	1000′	9°16′14"	81.08′	161.80′
6	1500′	5°46′28"	75.65′	151.17′

LAYOUT

SCALE: 1" = 50′ **L-1**

REVISED BY | DATE REVISED
MAHBOOBEH DEILAMI | FERMIN BARRIGA
CALCULATED-DESIGNED BY | CHECKED BY
FUNCTIONAL SUPERVISOR: CARLOS A. PORTILLO

STATE OF CALIFORNIA - DEPARTMENT OF TRANSPORTATION
NORTH REGION DIVISION OF ENGINEERING
Caltrans

LAST REVISION DATE PLOTTED => 18-MAR-2015
05-02-14 TIME PLOTTED => 15:07

BORDER LAST REVISED 7/2/2010 | USERNAME => s130875 | DGN FILE => 0300000224ea001.dgn | RELATIVE BORDER SCALE IS IN INCHES 0 1 2 3 | UNIT 0305 | PROJECT NUMBER & PHASE 03000002241

Dist	COUNTY	ROUTE	POST MILES TOTAL PROJECT	SHEET No.	TOTAL SHEETS
03	ED	89	13.8/18.0	6	164

REGISTERED CIVIL ENGINEER — 6-9-14 DATE

6-16-14
PLANS APPROVAL DATE

REGISTERED PROFESSIONAL ENGINEER
FERMIN BARRIGA
No. C47047
Exp. 12-31-15
CIVIL
STATE OF CALIFORNIA

THE STATE OF CALIFORNIA OR ITS OFFICERS OR AGENTS SHALL NOT BE RESPONSIBLE FOR THE ACCURACY OR COMPLETENESS OF SCANNED COPIES OF THIS PLAN SHEET.

NOTES:

1. FOR ACCURATE RIGHT OF WAY DATA, CONTACT RIGHT OF WAY ENGINEERING AT THE DISTRICT OFFICE.
2. FOR ABBREVIATIONS AND LEGEND INFORMATION, SEE LAYOUT SHEET L-1.
3. USE THE Approx 36 EXISTING PRECAST CONCRETE SUPPORTS FOR MBGR POST SUPPORTS. FOR EXISTING PRECAST CONCRETE SUPPORT DETAILS, SEE CONSTRUCTION DETAILS SHEET C-2.
4. FOR LOCATIONS OF EXISTING PRECAST CONCRETE SUPPORTS, USE TEEL POSTS FOR GUARDRAIL POSTS.
5. FOR TYPE D-4 Mod CURB DETAILS, SEE CONSTRUCTION DETAILS SHEET C-21.

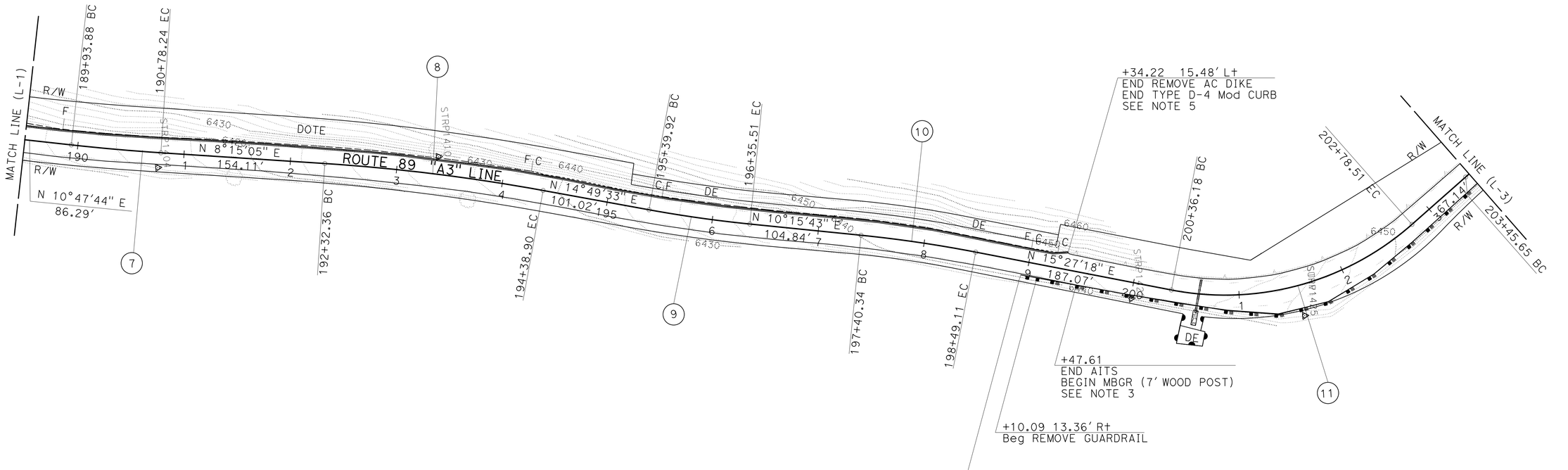

CURVE DATA

No.Ⓔ	R	Δ	T	L
7	1900′	2°32′39"	42.19′	84.37′
8	1800′	6°34′28"	103.38′	206.54′
9	1200′	4°33′50"	47.82′	95.59′
10	1200′	5°11′36"	54.42′	108.77′
11	265′	52°23′41"	130.38′	242.33′

LAYOUT

SCALE: 1" = 50′

L-2

STATE OF CALIFORNIA - DEPARTMENT OF TRANSPORTATION
Caltrans®
NORTH REGION
DIVISION OF ENGINEERING

FUNCTIONAL SUPERVISOR: CARLOS A. PORTILLO

CALCULATED-DESIGNED BY: MAHBOOBEH DEILAMI
CHECKED BY: FERMIN BARRIGA

REVISED BY | DATE REVISED

LAST REVISION: DATE PLOTTED => 18-MAR-2015; TIME PLOTTED => 15:07
04-07-14

BORDER LAST REVISED 7/2/2010

USERNAME => s130875
DGN FILE => 0300000224ea002.dgn

RELATIVE BORDER SCALE IS IN INCHES 0 1 2 3

UNIT 0305

PROJECT NUMBER & PHASE 03000002241

Dist	COUNTY	ROUTE	POST MILES TOTAL PROJECT	SHEET No.	TOTAL SHEETS
03	ED	89	13.8/18.0	7	164

Fermin Barriga B. 6-9-14
REGISTERED CIVIL ENGINEER DATE

FERMIN BARRIGA No. C47047 Exp. 12-31-15 CIVIL — REGISTERED PROFESSIONAL ENGINEER — STATE OF CALIFORNIA

6-16-14
PLANS APPROVAL DATE

THE STATE OF CALIFORNIA OR ITS OFFICERS OR AGENTS SHALL NOT BE RESPONSIBLE FOR THE ACCURACY OR COMPLETENESS OF SCANNED COPIES OF THIS PLAN SHEET.

NOTES:

1. FOR ACCURATE RIGHT OF WAY DATA, CONTACT RIGHT OF WAY ENGINEERING AT THE DISTRICT OFFICE.
2. FOR ABBREVIATIONS AND LEGEND INFORMATION, SEE LAYOUT SHEET L-1.
3. USE Approx 14 PRECAST CONCRETE SUPPORTS FOR MBGR POST SUPPORTS. FOR EXISTING PRECAST CONCRETE SUPPORT DETAILS, SEE CONSTRUCTION DETAILS SHEET C-2.
4. FOR LOCATIONS OF EXISTING PRECAST CONCRETE SUPPORTS, USE STEEL POSTS FOR GUARDRAIL POSTS.

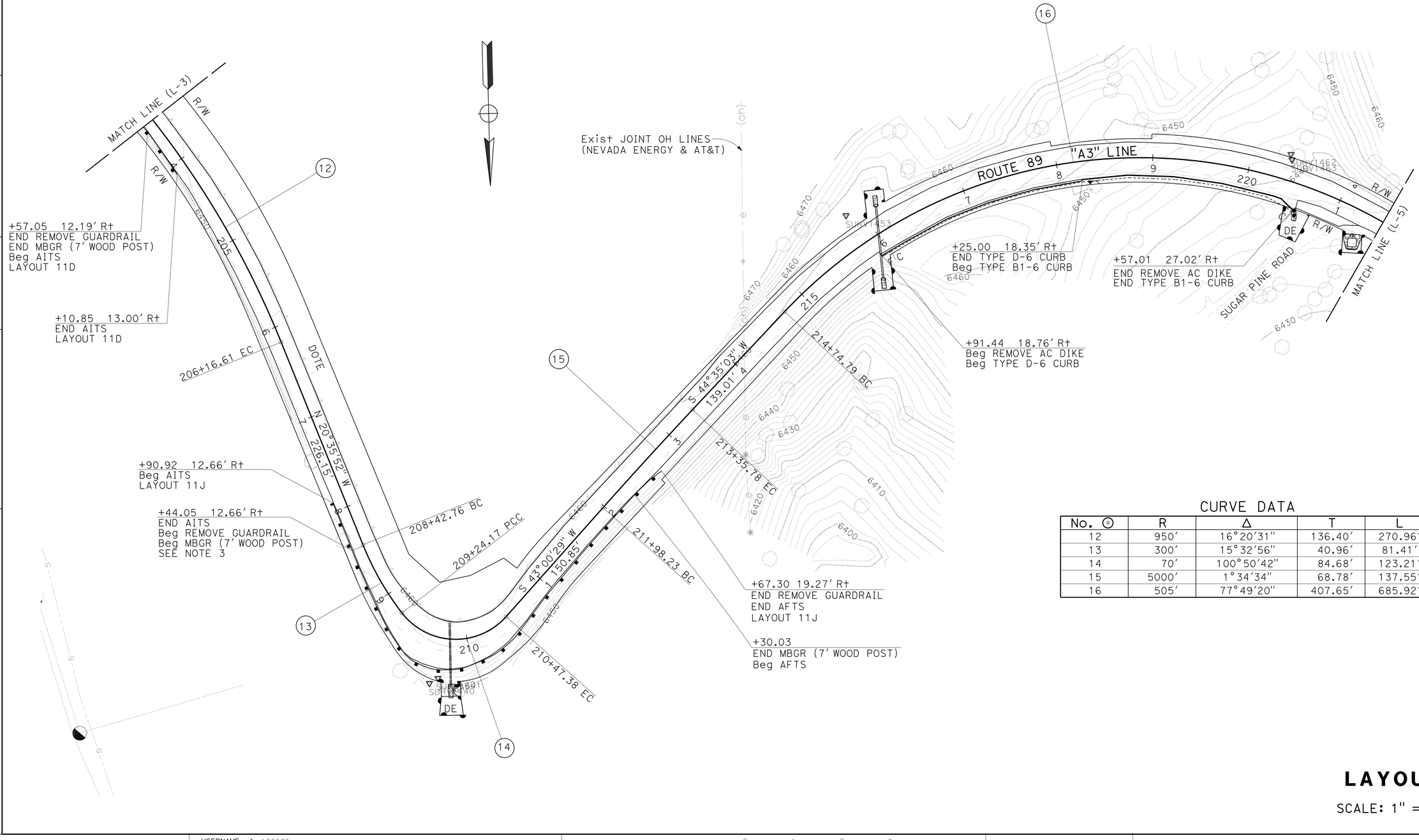

CURVE DATA

No. Ⓒ	R	Δ	T	L
12	950′	16°20′31"	136.40′	270.96′
13	300′	15°32′56"	40.96′	81.41′
14	70′	100°50′42"	84.68′	123.21′
15	5000′	1°34′34"	68.78′	137.55′
16	505′	77°49′20"	407.65′	685.92′

LAYOUT

SCALE: 1" = 50′

L-3

STATE OF CALIFORNIA - DEPARTMENT OF TRANSPORTATION
NORTH REGION
DIVISION OF ENGINEERING
Caltrans

CALCULATED-DESIGNED BY: MAHBOOBEH DEILAMI
CHECKED BY: FERMIN BARRIGA
REVISED BY / DATE REVISED
FUNCTIONAL SUPERVISOR: CARLOS A. PORTILLO

LAST REVISION | DATE PLOTTED => 18-MAR-2015
05-21-14 | TIME PLOTTED => 15:07

BORDER LAST REVISED 7/2/2010 | USERNAME => s130875 | DGN FILE => 0300000224ea003.dgn | RELATIVE BORDER SCALE IS IN INCHES 0 1 2 3 | UNIT 0305 | PROJECT NUMBER & PHASE 03000002241

Dist	COUNTY	ROUTE	POST MILES TOTAL PROJECT	SHEET No.	TOTAL SHEETS
03	ED	89	13.8/18.0	8	164

Fermin Barriga B. 6-9-14
REGISTERED CIVIL ENGINEER DATE

FERMIN BARRIGA No. C47047 Exp. 12-31-15 CIVIL — REGISTERED PROFESSIONAL ENGINEER — STATE OF CALIFORNIA

6-16-14
PLANS APPROVAL DATE

THE STATE OF CALIFORNIA OR ITS OFFICERS OR AGENTS SHALL NOT BE RESPONSIBLE FOR THE ACCURACY OR COMPLETENESS OF SCANNED COPIES OF THIS PLAN SHEET.

NOTES:

1. FOR ACCURATE RIGHT OF WAY DATA, CONTACT RIGHT OF WAY ENGINEERING AT THE DISTRICT OFFICE.
2. FOR ABBREVIATIONS AND LEGEND INFORMATION, SEE LAYOUT SHEET L-1.
3. FOR Conc BARRIER TYPE 9 RAILING TRANSITION DETAILS, SEE CONSTRUCTION DETAILS ON SHEET C-1 AND C-20. ALTERNATIVE 5 IS TO BE USED ON TRANSITIONS, EXCEPT ON THE DOWNSTREAM SB RAILING TRANSITION WHERE ALTERNATIVE 2 IS TO BE USED. FOR ALTERNATIVE 2, RECREATE Exist 2'-6" LONG BY 27" HIGH ANCHOR BLOCK AS A 2'-6" LONG BY 32"HIGH BLOCK BY FIRST REMOVING THE TOP 1' OF CONCRETE FROM THE Exist ANCHOR BLOCK.
4. FOR WINGWALL AND CONCRETED-RSP (FACING, METHOD A) DETAILS, SEE CONSTRUCTION DETAILS SHEET C-25.
5. FOR DEPTH OF UG WATER LINES, SEE DRAINAGE PLANS.
6. FOR TYPE B CURB DETAILS, SEE CONSTRUCTION DETAILS SHEET C-21.
7. NO COLD PLANE AC PAVEMENT OR HMA (TYPE A) WORK ON CASCADE CREEK BRIDGE.
8. FOR MAINTENANCE ACCESS DRIVEWAY DETAILS, SEE CONSTRUCTION DETAILS SHEET C-26.

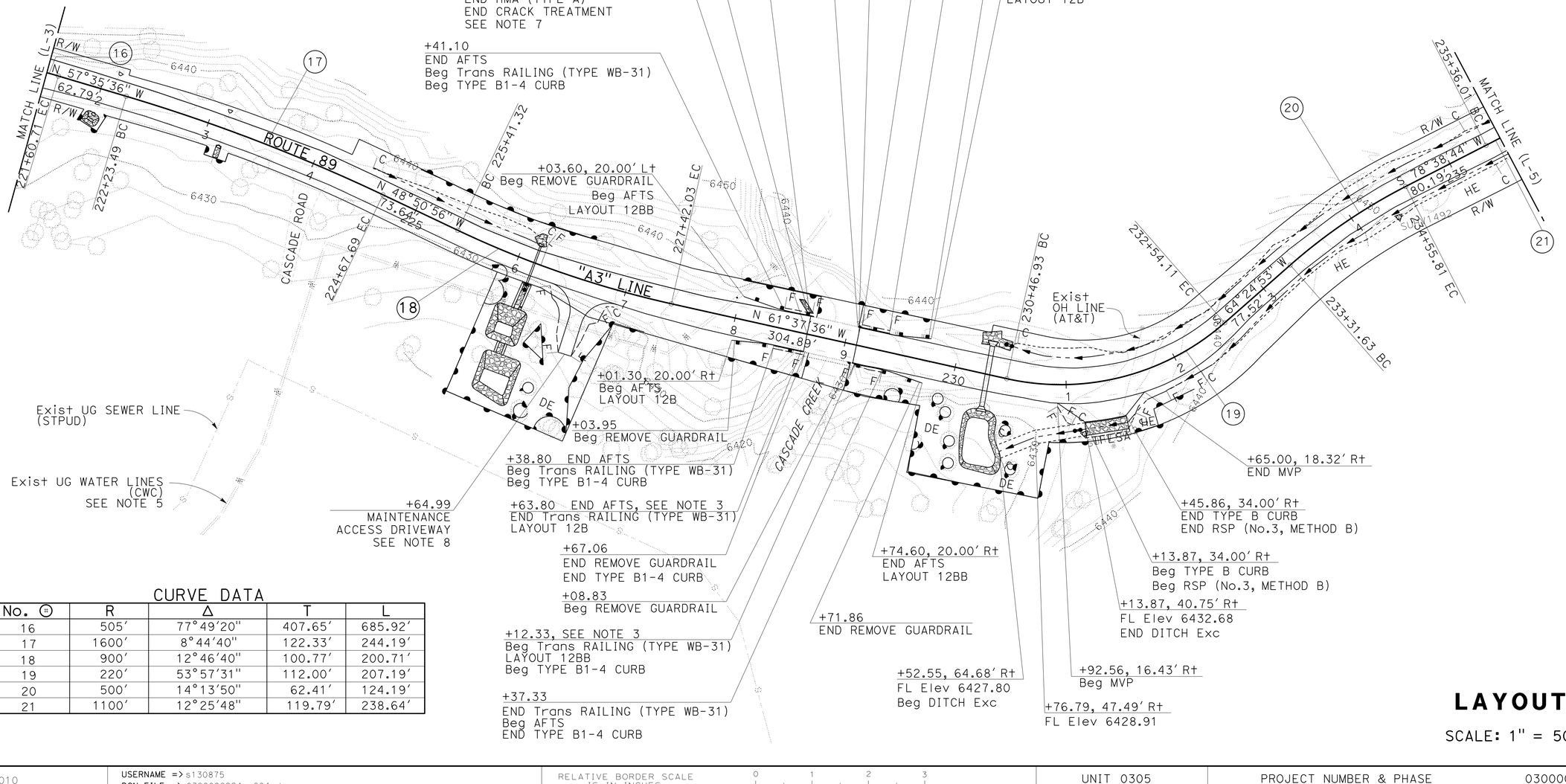

CURVE DATA

No. Ⓗ	R	Δ	T	L
16	505'	77°49'20"	407.65'	685.92'
17	1600'	8°44'40"	122.33'	244.19'
18	900'	12°46'40"	100.77'	200.71'
19	220'	53°57'31"	112.00'	207.19'
20	500'	14°13'50"	62.41'	124.19'
21	1100'	12°25'48"	119.79'	238.64'

LAYOUT

SCALE: 1" = 50'

L-4

STATE OF CALIFORNIA - DEPARTMENT OF TRANSPORTATION
NORTH REGION
DIVISION OF ENGINEERING
Caltrans
CARLOS A. PORTILLO — FUNCTIONAL SUPERVISOR
FERMIN BARRIGA — CALCULATED-DESIGNED BY
MAHBOOBEH DEILAMI — CHECKED BY
REVISED BY
DATE REVISED

LAST REVISION 05-21-14
DATE PLOTTED => 18-MAR-2015
TIME PLOTTED => 15:07

BORDER LAST REVISED 7/2/2010
USERNAME => s130875
DGN FILE => 0300000224ea004.dgn
RELATIVE BORDER SCALE IS IN INCHES 0 1 2 3
UNIT 0305
PROJECT NUMBER & PHASE 03000002241

Dist	COUNTY	ROUTE	POST MILES TOTAL PROJECT	SHEET No.	TOTAL SHEETS
03	ED	89	13.8/18.0	9	164

Fermin Barriga B. 6-9-14
REGISTERED CIVIL ENGINEER DATE

6-16-14
PLANS APPROVAL DATE

REGISTERED PROFESSIONAL ENGINEER
FERMIN BARRIGA
No. C47047
Exp. 12-31-15
CIVIL
STATE OF CALIFORNIA

THE STATE OF CALIFORNIA OR ITS OFFICERS OR AGENTS SHALL NOT BE RESPONSIBLE FOR THE ACCURACY OR COMPLETENESS OF SCANNED COPIES OF THIS PLAN SHEET.

NOTES:

1. FOR ACCURATE RIGHT OF WAY DATA, CONTACT RIGHT OF WAY ENGINEERING AT THE DISTRICT OFFICE.
2. FOR ABBREVIATIONS AND LEGEND INFORMATION, SEE LAYOUT SHEET L-1.

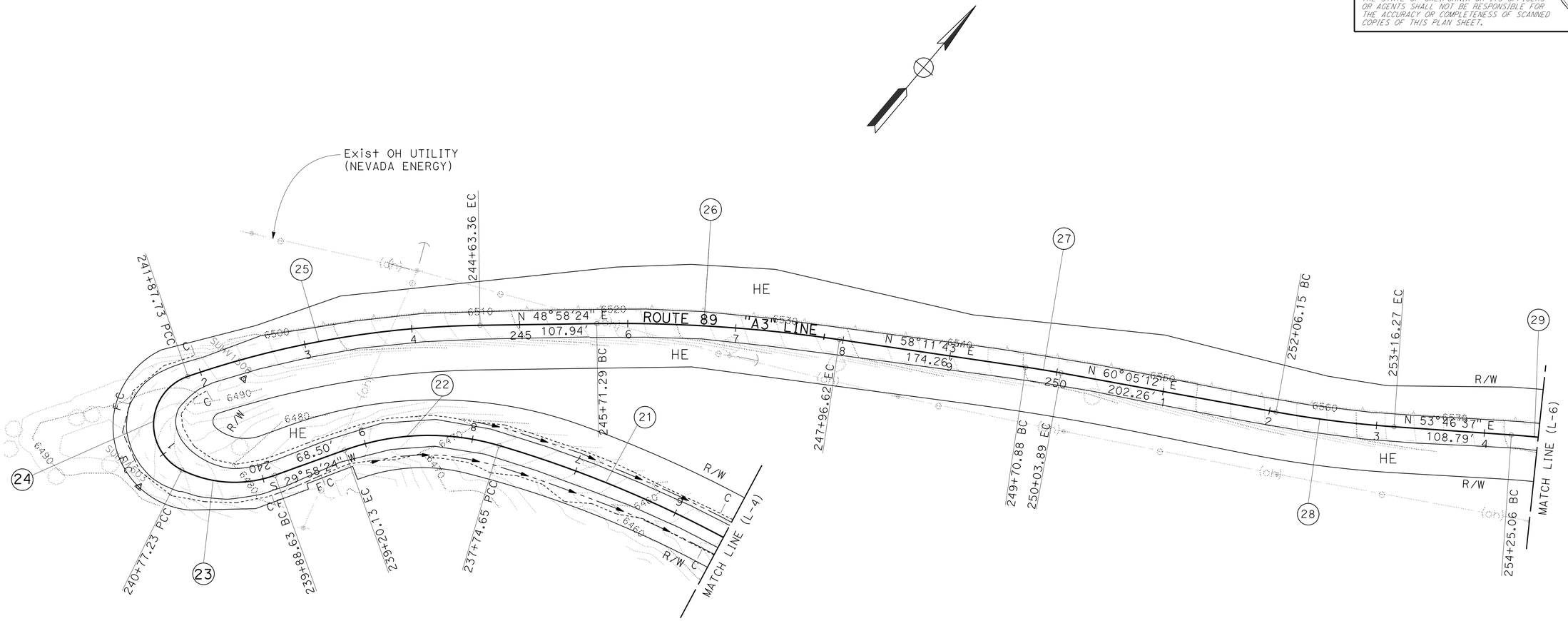

CURVE DATA

No. ⓐ	R	Δ	T	L
21	1100′	12°25′48"	119.79′	238.64′
22	230′	36°14′32"	75.27′	145.49′
23	110′	46°8′52"	46.86′	88.60′
24	47′	134°42′01"	112.63′	110.50′
25	870′	18°9′08"	138.98′	275.63′
26	1400′	9°13′18"	112.91′	225.33′
27	1000′	1°53′29"	16.51′	33.01′
28	1000′	6°18′34"	55.12′	110.12′
29	700′	6°12′22"	37.95′	75.82′

LAYOUT

SCALE: 1" = 50′

L-5

STATE OF CALIFORNIA - DEPARTMENT OF TRANSPORTATION
NORTH REGION
DIVISION OF ENGINEERING

FUNCTIONAL SUPERVISOR: CARLOS A. PORTILLO
CALCULATED-DESIGNED BY: MAHBOOBEH DEILAMI
CHECKED BY: FERMIN BARRIGA
REVISED BY
DATE REVISED

LAST REVISION: DATE PLOTTED => 18-MAR-2015
03-25-14 TIME PLOTTED => 15:07

BORDER LAST REVISED 7/2/2010
USERNAME => s130875
DGN FILE => 0300000224ea005.dgn
RELATIVE BORDER SCALE IS IN INCHES 0 1 2 3
UNIT 0305
PROJECT NUMBER & PHASE 03000002241

Dist	COUNTY	ROUTE	POST MILES TOTAL PROJECT	SHEET No.	TOTAL SHEETS
03	ED	89	13.8/18.0	10	164

Fermin Barriga B. 6-9-14
REGISTERED CIVIL ENGINEER DATE

FERMIN BARRIGA No. C47047 Exp. 12-31-15 CIVIL — REGISTERED PROFESSIONAL ENGINEER — STATE OF CALIFORNIA

6-16-14
PLANS APPROVAL DATE

THE STATE OF CALIFORNIA OR ITS OFFICERS OR AGENTS SHALL NOT BE RESPONSIBLE FOR THE ACCURACY OR COMPLETENESS OF SCANNED COPIES OF THIS PLAN SHEET.

NOTES:

1. FOR ACCURATE RIGHT OF WAY DATA, CONTACT RIGHT OF WAY ENGINEERING AT THE DISTRICT OFFICE.
2. FOR ABBREVIATIONS AND LEGEND INFORMATION, SEE LAYOUT SHEET L-1.
3. FOR TYPE D-4 Mod CURB DETAILS, SEE CONSTRUCTION DETAILS SHEET C-21.
4. FOR Mod HMA OVERSIDE DRAIN DETAILS, SEE CONSTRUCTION DETAILS SHEET C-24.

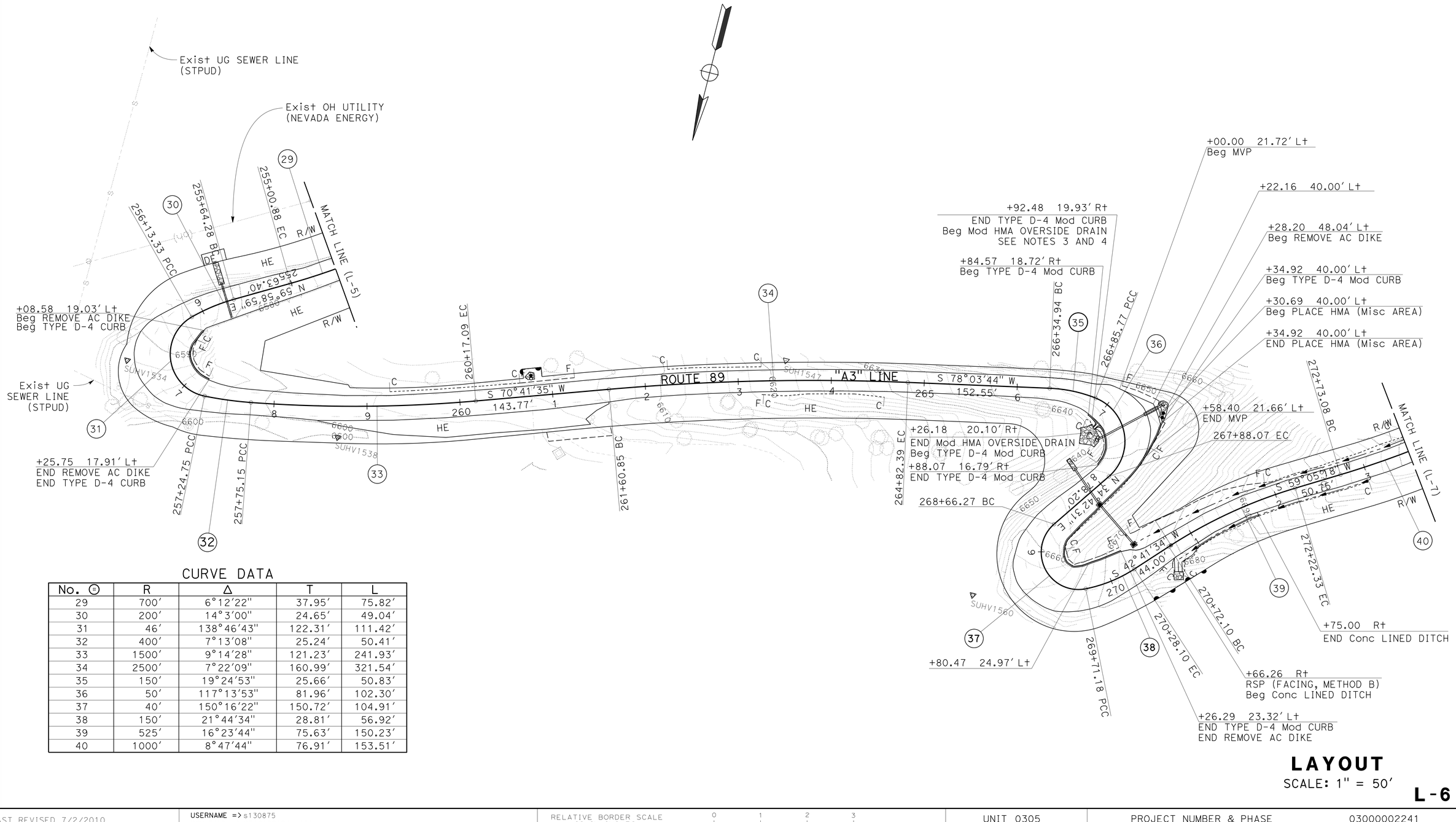

CURVE DATA

No. ⓗ	R	Δ	T	L
29	700′	6°12′22"	37.95′	75.82′
30	200′	14°3′00"	24.65′	49.04′
31	46′	138°46′43"	122.31′	111.42′
32	400′	7°13′08"	25.24′	50.41′
33	1500′	9°14′28"	121.23′	241.93′
34	2500′	7°22′09"	160.99′	321.54′
35	150′	19°24′53"	25.66′	50.83′
36	50′	117°13′53"	81.96′	102.30′
37	40′	150°16′22"	150.72′	104.91′
38	150′	21°44′34"	28.81′	56.92′
39	525′	16°23′44"	75.63′	150.23′
40	1000′	8°47′44"	76.91′	153.51′

LAYOUT

SCALE: 1" = 50′

L-6

STATE OF CALIFORNIA - DEPARTMENT OF TRANSPORTATION
NORTH REGION
DIVISION OF ENGINEERING
Caltrans®

FUNCTIONAL SUPERVISOR: CARLOS A. PORTILLO
CALCULATED-DESIGNED BY: MAHBOOBEH DEILAMI
CHECKED BY: FERMIN BARRIGA
REVISED BY
DATE REVISED

LAST REVISION: DATE PLOTTED => 18-MAR-2015; TIME PLOTTED => 15:07
05-22-14

BORDER LAST REVISED 7/2/2010
USERNAME => s130875
DGN FILE => 0300000224ea006.dgn
RELATIVE BORDER SCALE IS IN INCHES 0 1 2 3
UNIT 0305
PROJECT NUMBER & PHASE 03000002241

Dist	COUNTY	ROUTE	POST MILES TOTAL PROJECT	SHEET No.	TOTAL SHEETS
03	ED	89	13.8/18.0	11	164

Fermin Barriga B. 6-9-14
REGISTERED CIVIL ENGINEER DATE

6-16-14
PLANS APPROVAL DATE

REGISTERED PROFESSIONAL ENGINEER
FERMIN BARRIGA
No. C47047
Exp. 12-31-15
CIVIL
STATE OF CALIFORNIA

THE STATE OF CALIFORNIA OR ITS OFFICERS OR AGENTS SHALL NOT BE RESPONSIBLE FOR THE ACCURACY OR COMPLETENESS OF SCANNED COPIES OF THIS PLAN SHEET.

NOTES:

1. FOR ACCURATE RIGHT OF WAY DATA, CONTACT RIGHT OF WAY ENGINEERING AT THE DISTRICT OFFICE.
2. FOR ABBREVIATIONS AND LEGEND INFORMATION, SEE LAYOUT SHEET L-1.

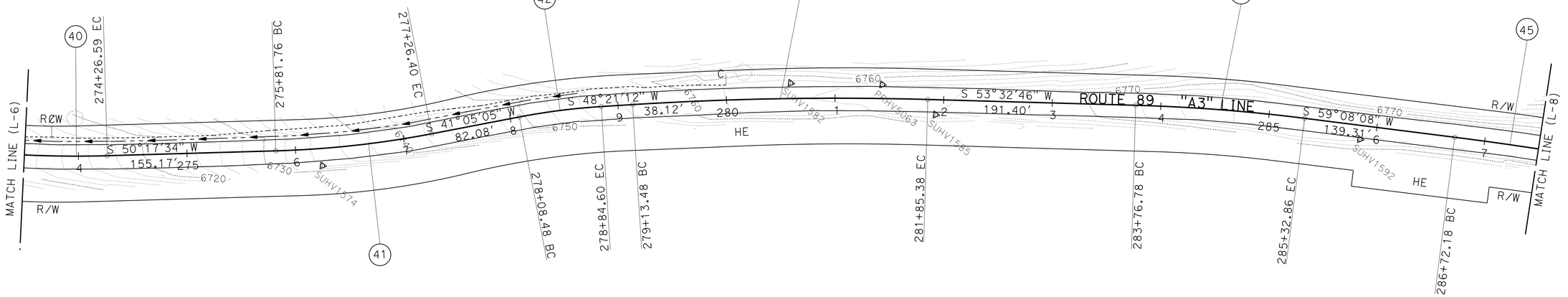

CURVE DATA

No. (#)	R	Δ	T	L
40	1000′	8°47′44"	76.91′	153.51′
41	900′	9°12′30"	72.48′	144.64′
42	600′	7°16′07"	38.11′	76.12′
43	3000′	5°11′34"	136.04′	271.90′
44	1600′	5°35′22"	78.10′	156.08′
45	3000′	1°57′42"	51.36′	102.72′

LAYOUT

SCALE: 1" = 50′

L-7

CALCULATED-DESIGNED BY
CHECKED BY
MAHBOOBEH DEILAMI
FERMIN BARRIGA
REVISED BY
DATE REVISED
FUNCTIONAL SUPERVISOR
CARLOS A. PORTILLO

STATE OF CALIFORNIA - DEPARTMENT OF TRANSPORTATION
Caltrans
NORTH REGION
DIVISION OF ENGINEERING

LAST REVISION
DATE PLOTTED => 18-MAR-2015
03-19-14 TIME PLOTTED => 15:07

BORDER LAST REVISED 7/2/2010
USERNAME => s130875
DGN FILE => 0300000224ea007.dgn
RELATIVE BORDER SCALE IS IN INCHES 0 1 2 3
UNIT 0305
PROJECT NUMBER & PHASE 03000002241

Dist	COUNTY	ROUTE	POST MILES TOTAL PROJECT	SHEET No.	TOTAL SHEETS
03	ED	89	13.8/18.0	12	164

Fermin Barriga B. 6-9-14
REGISTERED CIVIL ENGINEER DATE

FERMIN BARRIGA No. C47047 Exp. 12-31-15 CIVIL — REGISTERED PROFESSIONAL ENGINEER — STATE OF CALIFORNIA

6-16-14
PLANS APPROVAL DATE

THE STATE OF CALIFORNIA OR ITS OFFICERS OR AGENTS SHALL NOT BE RESPONSIBLE FOR THE ACCURACY OR COMPLETENESS OF SCANNED COPIES OF THIS PLAN SHEET.

NOTES:

1. FOR ACCURATE RIGHT OF WAY DATA, CONTACT RIGHT OF WAY ENGINEERING AT THE DISTRICT OFFICE.
2. FOR ABBREVIATIONS AND LEGEND INFORMATION, SEE LAYOUT SHEET L-1.
3. USE THE Approx 35 EXISTING PRECAST CONCRETE SUPPORTS FOR MBGR POST SUPPORTS. FOR EXISTING PRECAST CONCRETE SUPPORT DETAILS, SEE CONSTRUCTION DETAILS SHEET C-2.
4. FOR LOCATIONS OF EXISTING PRECAST CONCRETE SUPPORTS, USE STEEL POSTS FOR GUARDRAIL POSTS.

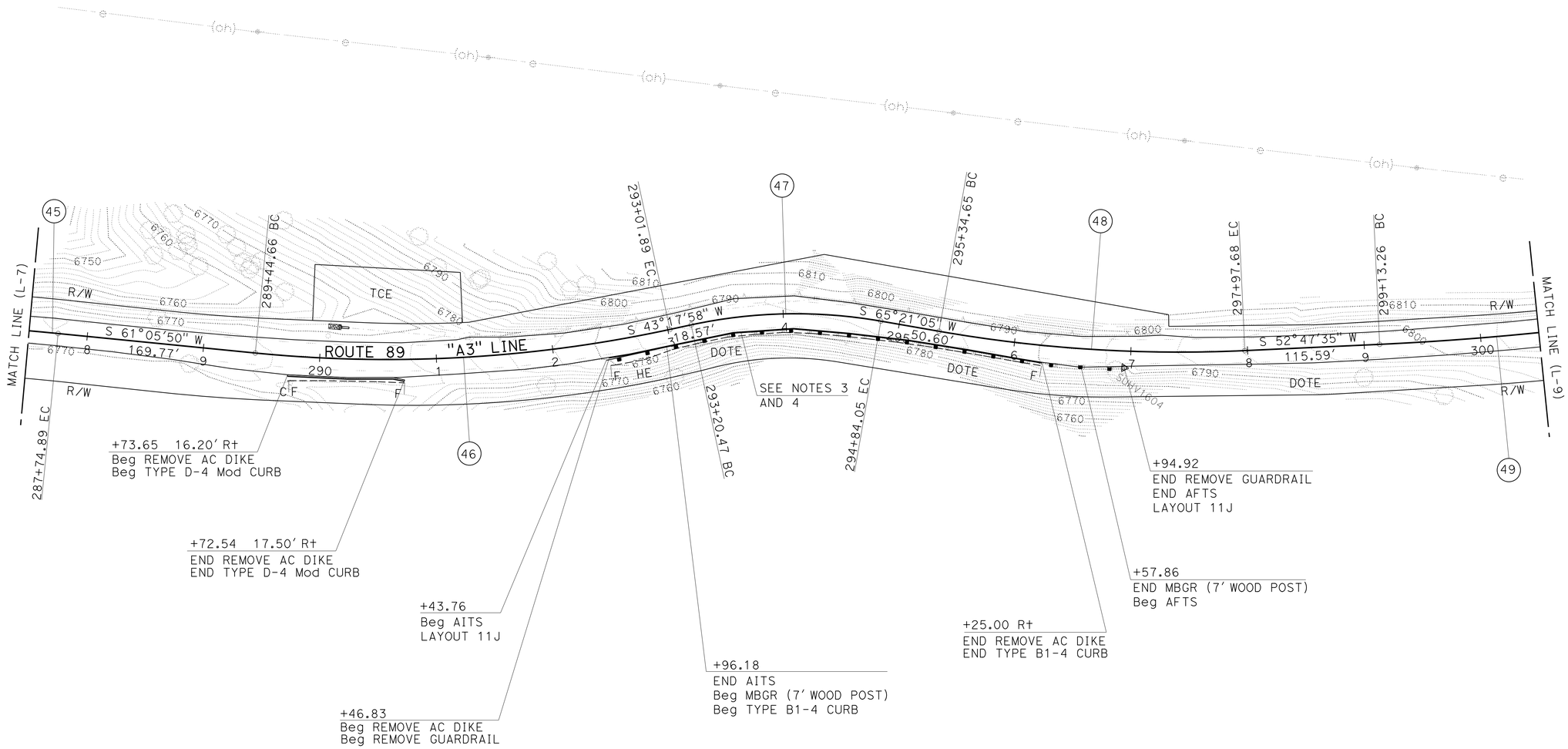

CURVE DATA

No. ⊕	R	Δ	T	L
45	3000′	1°57′42"	51.36′	102.72′
46	1150′	17°47′52"	180.06′	357.22′
47	425′	22°3′07"	82.81′	163.57′
48	1200′	12°33′31"	132.04′	263.03′
49	2500′	4°36′27"	100.58′	201.05′

LAYOUT

SCALE: 1" = 50′

L-8

REVISED BY | DATE REVISED
MAHBOOBEH DEILAMI | FERMIN BARRIGA
CALCULATED-DESIGNED BY | CHECKED BY
FUNCTIONAL SUPERVISOR: CARLOS A. PORTILLO

STATE OF CALIFORNIA - DEPARTMENT OF TRANSPORTATION
Caltrans
NORTH REGION
DIVISION OF ENGINEERING

LAST REVISION: DATE PLOTTED => 18-MAR-2015
04-07-14 TIME PLOTTED => 15:07

BORDER LAST REVISED 7/2/2010 | USERNAME => s130875 | DGN FILE => 0300000224ea008.dgn | RELATIVE BORDER SCALE IS IN INCHES 0 1 2 3 | UNIT 0305 | PROJECT NUMBER & PHASE 03000002241

Dist	COUNTY	ROUTE	POST MILES TOTAL PROJECT	SHEET No.	TOTAL SHEETS
03	ED	89	13.8/18.0	13	164

Fermin Barriga B. 6-9-14
REGISTERED CIVIL ENGINEER DATE

6-16-14
PLANS APPROVAL DATE

REGISTERED PROFESSIONAL ENGINEER
FERMIN BARRIGA
No. C47047
Exp. 12-31-15
CIVIL
STATE OF CALIFORNIA

THE STATE OF CALIFORNIA OR ITS OFFICERS OR AGENTS SHALL NOT BE RESPONSIBLE FOR THE ACCURACY OR COMPLETENESS OF SCANNED COPIES OF THIS PLAN SHEET.

NOTES:

1. FOR ACCURATE RIGHT OF WAY DATA, CONTACT RIGHT OF WAY ENGINEERING AT THE DISTRICT OFFICE.
2. FOR ABBREVIATIONS AND LEGEND INFORMATION, SEE LAYOUT SHEET L-1.
3. USE THE Approx 70 EXISTING PRECAST CONCRETE SUPPORTS FOR MBGR POST SUPPORTS. FOR EXISTING PRECAST CONCRETE SUPPORT DETAILS, SEE CONSTRUCTION DETAILS SHEET C-2.
4. FOR LOCATIONS OF EXISTING PRECAST CONCRETE SUPPORTS, USE TEEL POSTS FOR GUARDRAIL POSTS.

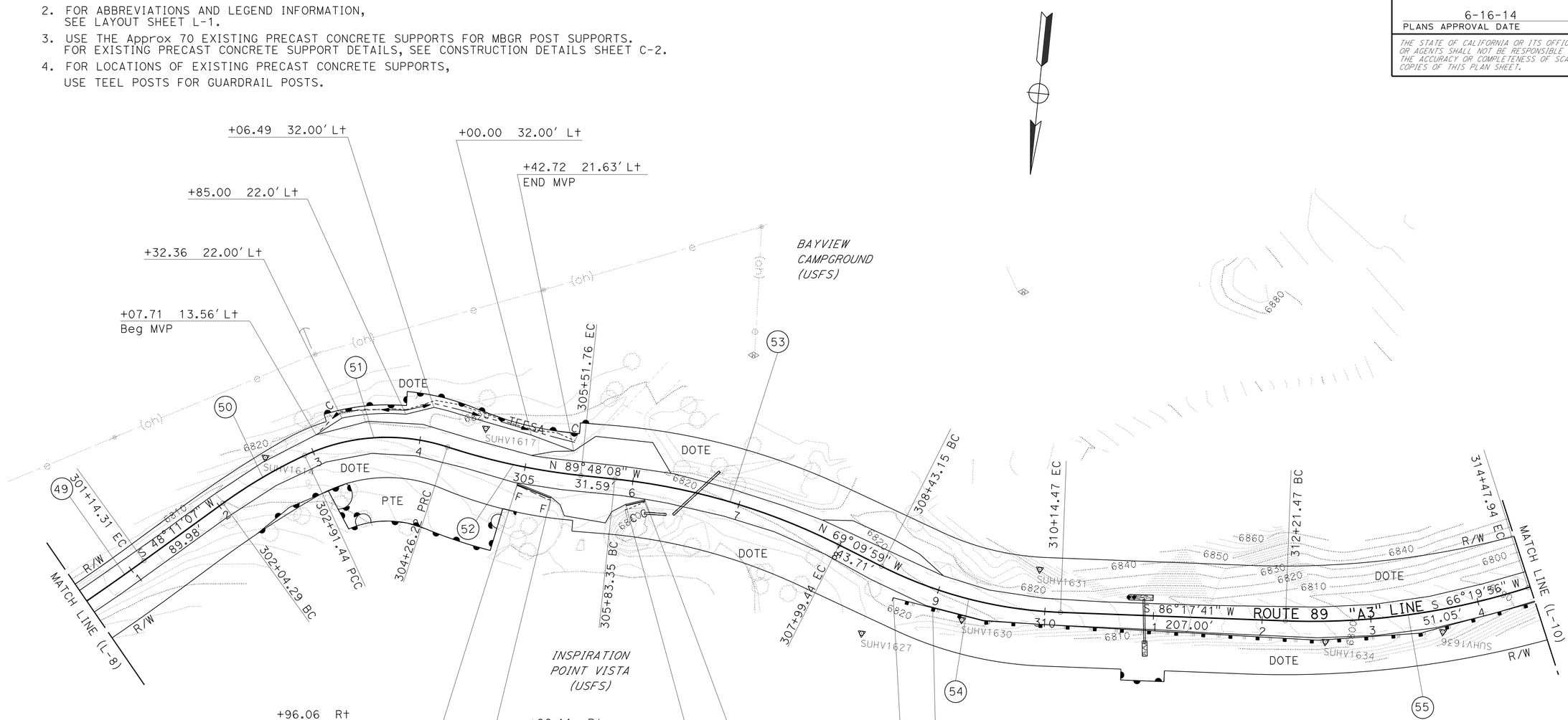

CURVE DATA

No. ⑭	R	Δ	T	L
49	2500'	4°36'27"	100.58'	201.05'
50	450'	11°5'47"	43.71'	87.15'
51	180'	42°54'12"	70.73'	134.79'
52	600'	11°59'14"	63.00'	125.53'
53	600'	20°38'09"	109.23'	216.10'
54	400'	24°32'20"	86.99'	171.31'
55	650'	19°57'45"	114.39'	226.47'

LAYOUT

SCALE: 1" = 50'

L-9

STATE OF CALIFORNIA - DEPARTMENT OF TRANSPORTATION
NORTH REGION
DIVISION OF ENGINEERING
Caltrans

FUNCTIONAL SUPERVISOR: CARLOS A. PORTILLO
CALCULATED-DESIGNED BY: MAHBOOBEH DEILAMI
CHECKED BY: FERMIN BARRIGA
REVISED BY
DATE REVISED

LAST REVISION DATE PLOTTED => 18-MAR-2015
TIME PLOTTED => 15:07
05-14-14

BORDER LAST REVISED 7/2/2010
USERNAME => s130875
DGN FILE => 0300000224ea009.dgn
RELATIVE BORDER SCALE IS IN INCHES 0 1 2 3
UNIT 0305
PROJECT NUMBER & PHASE 03000002241

Dist	COUNTY	ROUTE	POST MILES TOTAL PROJECT	SHEET No.	TOTAL SHEETS
03	ED	89	13.8/18.0	14	164

Fermin Barriga 6-9-14
REGISTERED CIVIL ENGINEER DATE

FERMIN BARRIGA No. C47047 Exp. 12-31-15 CIVIL — REGISTERED PROFESSIONAL ENGINEER — STATE OF CALIFORNIA

6-16-14
PLANS APPROVAL DATE

THE STATE OF CALIFORNIA OR ITS OFFICERS OR AGENTS SHALL NOT BE RESPONSIBLE FOR THE ACCURACY OR COMPLETENESS OF SCANNED COPIES OF THIS PLAN SHEET.

NOTES:

1. FOR ACCURATE RIGHT OF WAY DATA, CONTACT RIGHT OF WAY ENGINEERING AT THE DISTRICT OFFICE.
2. FOR ABBREVIATIONS AND LEGEND INFORMATION, SEE LAYOUT SHEET L-1.
3. USE THE Approx 70 EXISTING PRECAST CONCRETE SUPPORTS FOR MBGR POST SUPPORTS. FOR EXISTING PRECAST CONCRETE SUPPORT DETAILS, SEE CONSTRUCTION DETAILS SHEET C-2.
4. FOR LOCATIONS OF EXISTING PRECAST CONCRETE SUPPORTS, USE STEEL POSTS FOR GUARDRAIL POSTS.
5. MBGR LAYOUT RADIUS IS APPROXIMATELY 150'. CONFIRM FIELD LAYOUT TO ENSURE SHOP-BENDING OF 4 RAIL ELEMENTS IS NOT NEEDED.
6. FOR Mod HMA OVERSIDE DRAIN DETAILS, SEE CONSTRUCTION DETAILS SHEET C-24.
7. SEE SHEET C-17 FOR VEGETATION CONTROL (MINOR CONCRETE) DETAILS.
8. FOR RSP (FACING, METHOD B) DETAILS, SEE CONSTRUCTION DETAILS SHEET C-22.

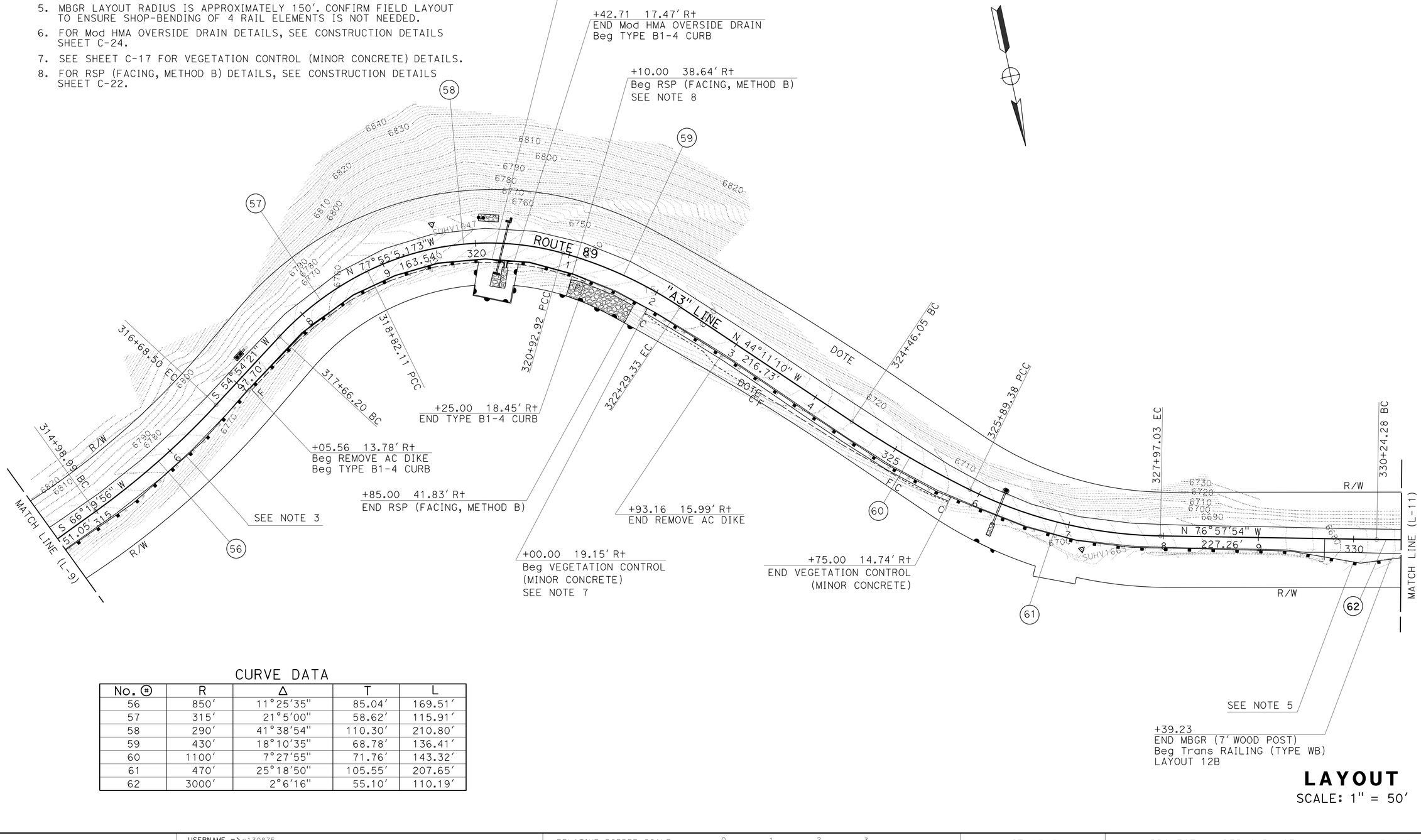

CURVE DATA

No. ⑭	R	Δ	T	L
56	850'	11°25'35"	85.04'	169.51'
57	315'	21°5'00"	58.62'	115.91'
58	290'	41°38'54"	110.30'	210.80'
59	430'	18°10'35"	68.78'	136.41'
60	1100'	7°27'55"	71.76'	143.32'
61	470'	25°18'50"	105.55'	207.65'
62	3000'	2°6'16"	55.10'	110.19'

LAYOUT
SCALE: 1" = 50'

L-10

STATE OF CALIFORNIA - DEPARTMENT OF TRANSPORTATION
NORTH REGION
DIVISION OF ENGINEERING
Caltrans®

CALCULATED-DESIGNED BY: MAHBOOBEH DEILAMI
CHECKED BY: FERMIN BARRIGA
FUNCTIONAL SUPERVISOR: CARLOS A. PORTILLO
REVISED BY / DATE REVISED

LAST REVISION | DATE PLOTTED => 18-MAR-2015
04-07-14 | TIME PLOTTED => 15:07

BORDER LAST REVISED 7/2/2010
USERNAME => s130875
DGN FILE => 0300000224ea010.dgn
RELATIVE BORDER SCALE IS IN INCHES 0 1 2 3
UNIT 0305
PROJECT NUMBER & PHASE 03000002241

Dist	COUNTY	ROUTE	POST MILES TOTAL PROJECT	SHEET No.	TOTAL SHEETS
03	ED	89	13.8/18.0	15	164

Fermin Barriga 6-9-14
REGISTERED CIVIL ENGINEER DATE

FERMIN BARRIGA No. C47047 Exp. 12-31-15 CIVIL — REGISTERED PROFESSIONAL ENGINEER — STATE OF CALIFORNIA

6-16-14
PLANS APPROVAL DATE

THE STATE OF CALIFORNIA OR ITS OFFICERS OR AGENTS SHALL NOT BE RESPONSIBLE FOR THE ACCURACY OR COMPLETENESS OF SCANNED COPIES OF THIS PLAN SHEET.

NOTES:

1. FOR ACCURATE RIGHT OF WAY DATA, CONTACT RIGHT OF WAY ENGINEERING AT THE DISTRICT OFFICE.
2. FOR ABBREVIATIONS AND LEGEND INFORMATION, SEE LAYOUT SHEET L-1.
3. USE THE Approx 9 EXISTING PRECAST CONCRETE SUPPORTS FOR MBGR POST SUPPORTS. FOR EXISTING PRECAST CONCRETE SUPPORT DETAILS, SEE CONSTRUCTION DETAILS SHEET C-2.
4. FOR LOCATIONS OF EXISTING PRECAST CONCRETE SUPPORTS, USE STEEL POSTS FOR GUARDRAIL POSTS.
5. SEE CONSTRUCTION DETAILS SHEET C-16 FOR TRANSITION RAILING (TYPE WB), CONSTRUCTION DETAILS SHEET C-12 FOR MBGR LAYOUT 12B AND CONSTRUCTION DETAILS SHEET C-13 FOR MBGR LAYOUT 12BB.
6. SEE SHEETS C-17 TO C-19 FOR ADDITIONAL VEGETATION CONTROL (MINOR CONTRETE) DETAILS.

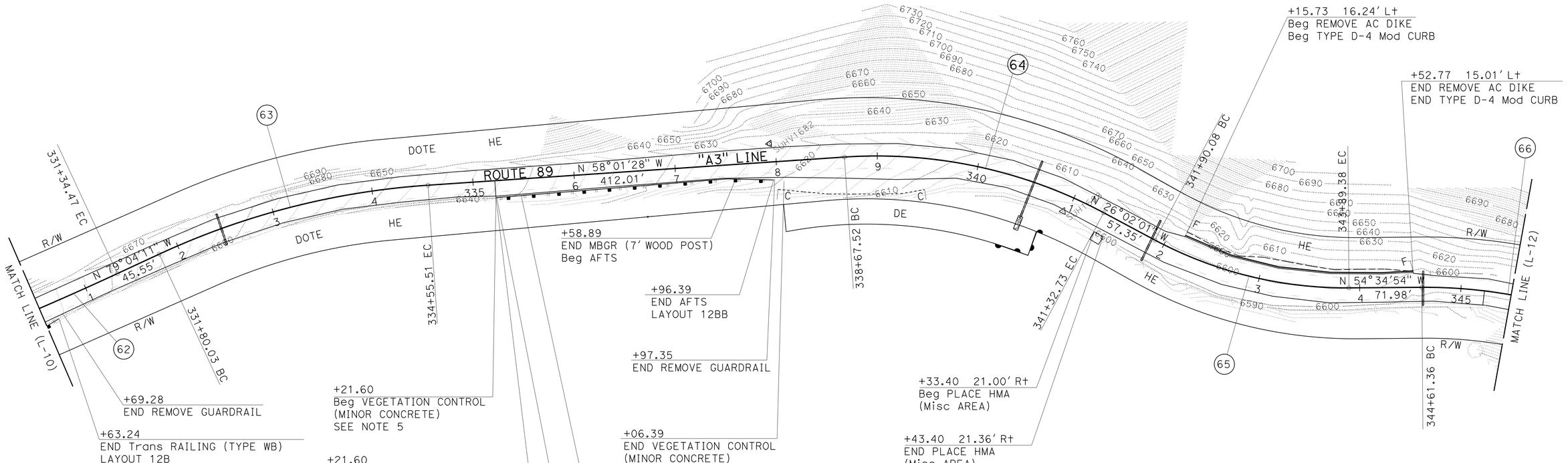

CURVE DATA

No. ⓗ	R	Δ	T	L
62	3000′	2°6′16"	55.10′	110.19′
63	750′	21°2′43"	139.31′	275.48′
64	475′	31°59′27"	136.16′	265.21′
65	400′	28°32′53"	101.77′	199.30′
66	480′	20°21′52"	86.21′	170.61′

LAYOUT
SCALE: 1" = 50′

L-11

STATE OF CALIFORNIA - DEPARTMENT OF TRANSPORTATION
Caltrans®
NORTH REGION
DIVISION OF ENGINEERING

FUNCTIONAL SUPERVISOR: CARLOS A. PORTILLO
CALCULATED-DESIGNED BY: MAHBOOBEH DEILAMI
CHECKED BY: FERMIN BARRIGA
REVISED BY / DATE REVISED

LAST REVISION: DATE PLOTTED => 18-MAR-2015; TIME PLOTTED => 15:07
04-07-14

BORDER LAST REVISED 7/2/2010
USERNAME => s130875
DGN FILE => 0300000224ea011.dgn
RELATIVE BORDER SCALE IS IN INCHES 0 1 2 3
UNIT 0305
PROJECT NUMBER & PHASE 03000002241

Dist	COUNTY	ROUTE	POST MILES TOTAL PROJECT	SHEET No.	TOTAL SHEETS
03	ED	89	13.8/18.0	16	164

Fermin Barriga 6-9-14
REGISTERED CIVIL ENGINEER DATE

6-16-14
PLANS APPROVAL DATE

FERMIN BARRIGA No. C47047 Exp. 12-31-15 CIVIL — REGISTERED PROFESSIONAL ENGINEER — STATE OF CALIFORNIA

THE STATE OF CALIFORNIA OR ITS OFFICERS OR AGENTS SHALL NOT BE RESPONSIBLE FOR THE ACCURACY OR COMPLETENESS OF SCANNED COPIES OF THIS PLAN SHEET.

NOTES:

1. FOR ACCURATE RIGHT OF WAY DATA, CONTACT RIGHT OF WAY ENGINEERING AT THE DISTRICT OFFICE.
2. FOR ABBREVIATIONS AND LEGEND INFORMATION, SEE LAYOUT SHEET L-1.
3. SEE CONSTRUCTION DETAIL SHEET C-21 FOR CURB TYPE AND CURB DETAILS.
4. NO COLD PLANE AC PAVEMENT OR HMA (TYPE A) OVER EAGLE CREEK BRIDGE.

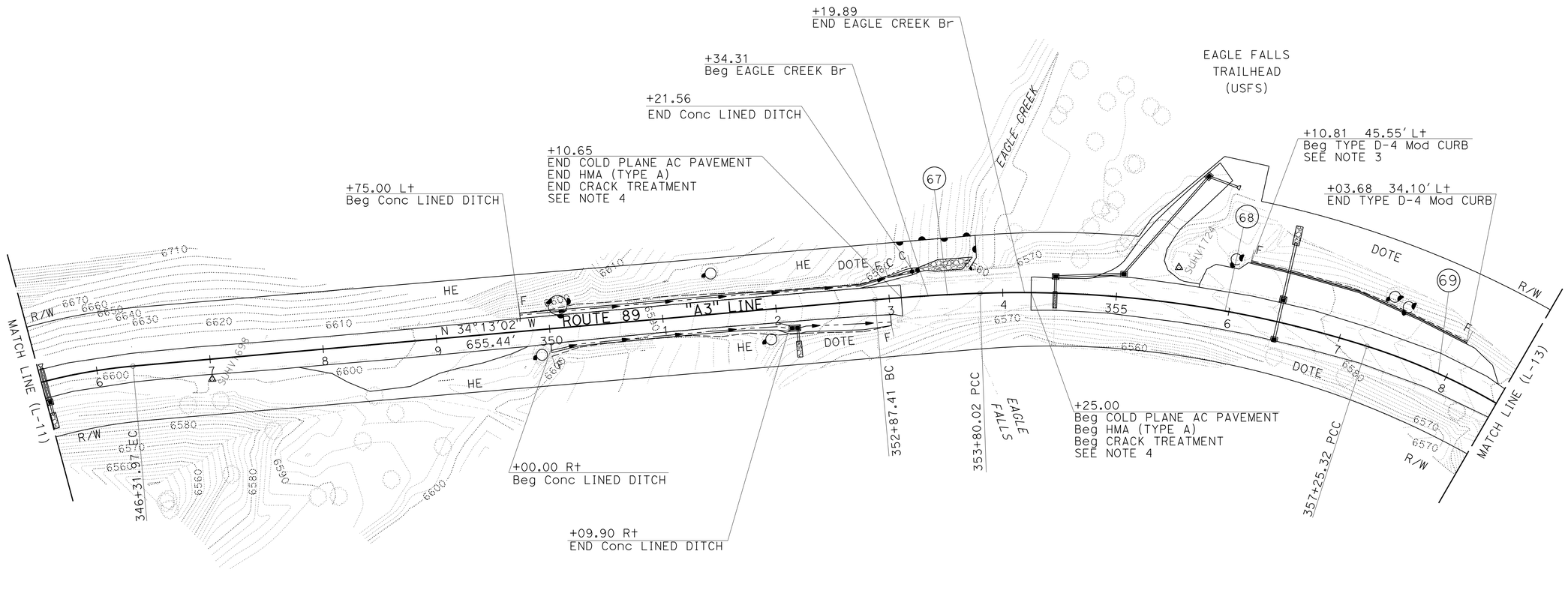

CURVE DATA

No. ℗	R	Δ	T	L
67	1700′	3°7′16"	46.31′	92.60′
68	1010′	19°35′19"	174.35′	345.31′
69	575′	20°18′42"	103.00′	203.84′

LAYOUT

SCALE: 1" = 50′

L-12

REVISED BY | DATE REVISED
MAHBOOBEH DEILAMI | FERMIN BARRIGA
CALCULATED-DESIGNED BY | CHECKED BY
FUNCTIONAL SUPERVISOR: CARLOS A. PORTILLO

STATE OF CALIFORNIA - DEPARTMENT OF TRANSPORTATION
Caltrans
NORTH REGION
DIVISION OF ENGINEERING

LAST REVISION | DATE PLOTTED => 18-MAR-2015
04-21-14 | TIME PLOTTED => 15:07

BORDER LAST REVISED 7/2/2010 | USERNAME => s130875 | DGN FILE => 0300000224ea012.dgn | RELATIVE BORDER SCALE IS IN INCHES 0 1 2 3 | UNIT 0305 | PROJECT NUMBER & PHASE 03000002241

Dist	COUNTY	ROUTE	POST MILES TOTAL PROJECT	SHEET No.	TOTAL SHEETS
03	ED	89	13.8/18.0	17	164

Fermin Barriga B. 6-9-14
REGISTERED CIVIL ENGINEER DATE

6-16-14
PLANS APPROVAL DATE

REGISTERED PROFESSIONAL ENGINEER
FERMIN BARRIGA
No. C47047
Exp. 12-31-15
CIVIL
STATE OF CALIFORNIA

THE STATE OF CALIFORNIA OR ITS OFFICERS OR AGENTS SHALL NOT BE RESPONSIBLE FOR THE ACCURACY OR COMPLETENESS OF SCANNED COPIES OF THIS PLAN SHEET.

NOTES:

1. FOR ACCURATE RIGHT OF WAY DATA, CONTACT RIGHT OF WAY ENGINEERING AT THE DISTRICT OFFICE.
2. FOR ABBREVIATIONS AND LEGEND INFORMATION, SEE LAYOUT SHEET L-1.
3. NO COLD PLANE AC PAVEMENT, CRACK TREATMENT, OR HMA (TYPE A) WORK ON EAGLE FALLS VIADUCTS.

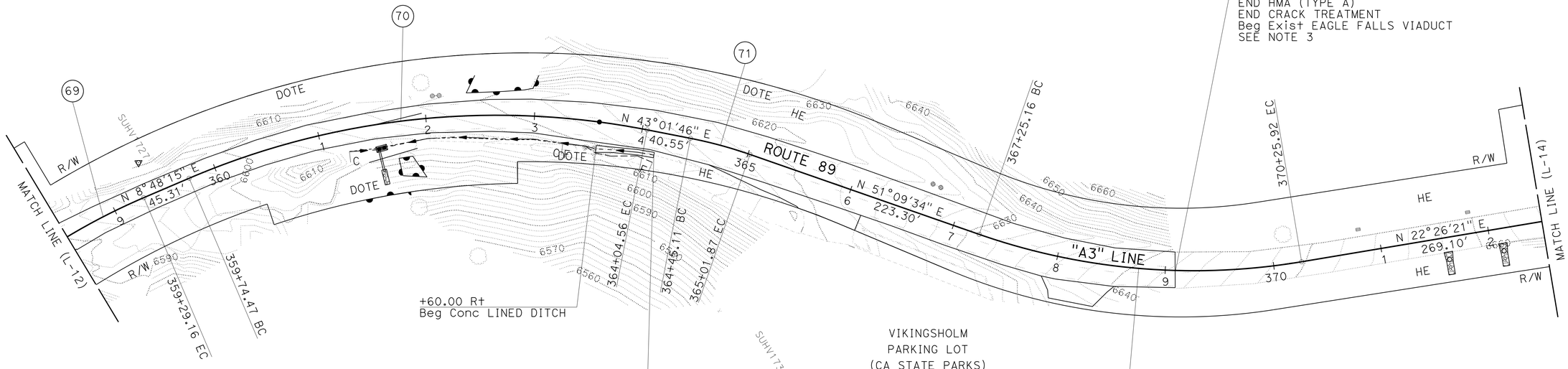

CURVE DATA

No. ⊕	R	Δ	T	L
69	575′	20°18′42"	103.00′	203.84′
70	720′	34°13′31"	221.67′	430.09′
71	400′	8°7′47"	28.43′	56.76′
72	600′	28°43′13"	153.61′	300.76′

LAYOUT
SCALE: 1" = 50′

L-13

CALCULATED-DESIGNED BY: MAHBOOBEH DEILAMI
CHECKED BY: FERMIN BARRIGA
REVISED BY
DATE REVISED
FUNCTIONAL SUPERVISOR: CARLOS A. PORTILLO
STATE OF CALIFORNIA - DEPARTMENT OF TRANSPORTATION
NORTH REGION
DIVISION OF ENGINEERING
Caltrans

LAST REVISION | DATE PLOTTED => 18-MAR-2015
04-21-14 | TIME PLOTTED => 15:07

BORDER LAST REVISED 7/2/2010
USERNAME => s130875
DGN FILE => 0300000224ea013.dgn
RELATIVE BORDER SCALE IS IN INCHES 0 1 2 3
UNIT 0305
PROJECT NUMBER & PHASE 03000002241

Dist	COUNTY	ROUTE	POST MILES TOTAL PROJECT	SHEET No.	TOTAL SHEETS
03	ED	89	13.8/18.0	18	164

Fermin Barriga B. 6-9-14
REGISTERED CIVIL ENGINEER DATE

FERMIN BARRIGA No. C47047 Exp. 12-31-15 CIVIL — REGISTERED PROFESSIONAL ENGINEER — STATE OF CALIFORNIA

6-16-14
PLANS APPROVAL DATE

THE STATE OF CALIFORNIA OR ITS OFFICERS OR AGENTS SHALL NOT BE RESPONSIBLE FOR THE ACCURACY OR COMPLETENESS OF SCANNED COPIES OF THIS PLAN SHEET.

NOTES:

1. FOR ACCURATE RIGHT OF WAY DATA, CONTACT RIGHT OF WAY ENGINEERING AT THE DISTRICT OFFICE.
2. FOR ABBREVIATIONS AND LEGEND INFORMATION, SEE LAYOUT SHEET L-1.
3. NO COLD PLANE AC PAVEMENT, CRACK TREATMENT, OR HMA (TYPE A) WORK ON EAGLE FALLS VIADUCTS.

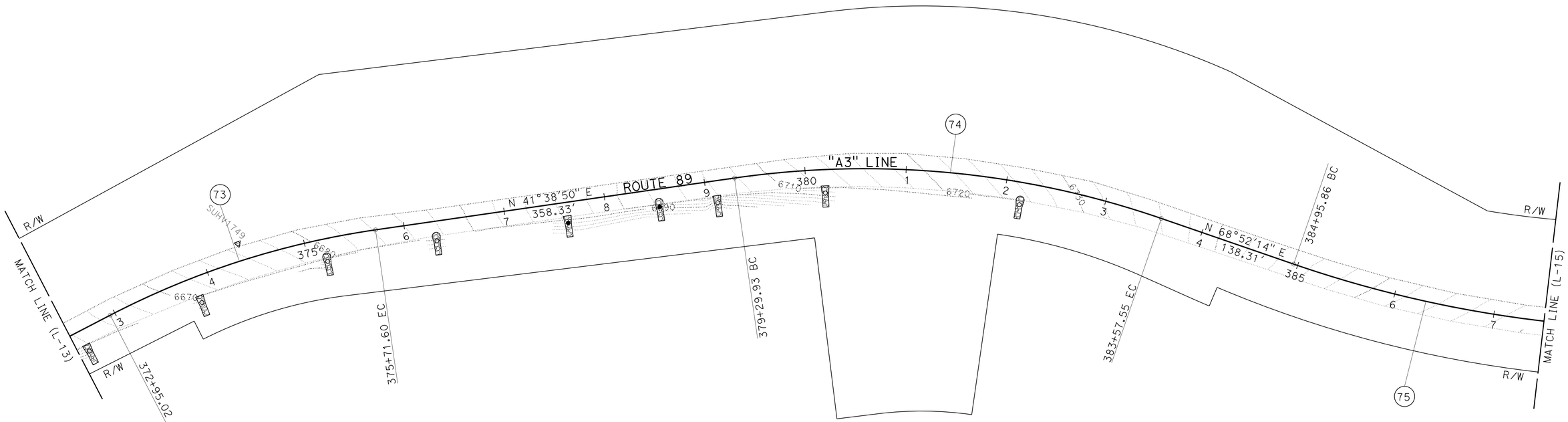

CURVE DATA

No. ⓐ	R	Δ	T	L
73	825′	19°12′29"	139.60′	276.58′
74	900′	27°13′23"	217.93′	427.62′
75	1175′	28°31′01"	298.59′	584.81′

LAYOUT

SCALE: 1" = 50′

L-14

STATE OF CALIFORNIA - DEPARTMENT OF TRANSPORTATION
Caltrans
NORTH REGION
DIVISION OF ENGINEERING

FUNCTIONAL SUPERVISOR: CARLOS A. PORTILLO
CALCULATED-DESIGNED BY: MAHBOOBEH DEILAMI
CHECKED BY: FERMIN BARRIGA
REVISED BY | DATE REVISED

LAST REVISION | DATE PLOTTED => 18-MAR-2015
04-16-14 | TIME PLOTTED => 15:07

BORDER LAST REVISED 7/2/2010

USERNAME => s130875
DGN FILE => 0300000224ea014.dgn

RELATIVE BORDER SCALE IS IN INCHES 0 1 2 3

UNIT 0305

PROJECT NUMBER & PHASE 03000002241

Dist	COUNTY	ROUTE	POST MILES TOTAL PROJECT	SHEET No.	TOTAL SHEETS
03	ED	89	13.8/18.0	19	164

Fermin Barriga B. 6-9-14
REGISTERED CIVIL ENGINEER DATE

FERMIN BARRIGA No. C47047 Exp. 12-31-15 CIVIL — REGISTERED PROFESSIONAL ENGINEER — STATE OF CALIFORNIA

6-16-14
PLANS APPROVAL DATE

THE STATE OF CALIFORNIA OR ITS OFFICERS OR AGENTS SHALL NOT BE RESPONSIBLE FOR THE ACCURACY OR COMPLETENESS OF SCANNED COPIES OF THIS PLAN SHEET.

NOTES:

1. FOR ACCURATE RIGHT OF WAY DATA, CONTACT RIGHT OF WAY ENGINEERING AT THE DISTRICT OFFICE.
2. FOR ABBREVIATIONS AND LEGEND INFORMATION, SEE LAYOUT SHEET L-1.
3. NO COLD PLANE AC PAVEMENT, CRACK TREATMENT, OR HMA (TYPE A) WORK ON EAGLE FALLS VIADUCTS.

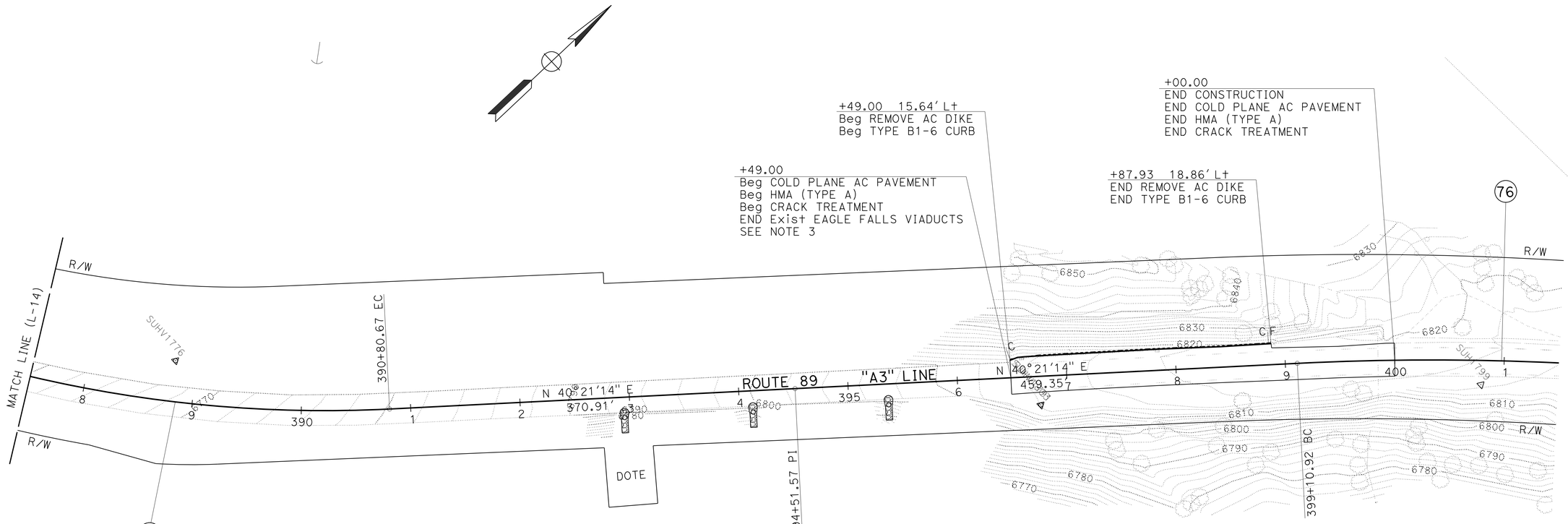

CURVE DATA

No. ⓟ	R	Δ	T	L
75	1175′	28°31′00"	298.59′	584.81′
76	2460′	8°41′44"	187.03′	373.34′

LAYOUT

SCALE: 1" = 50′

L-15

STATE OF CALIFORNIA - DEPARTMENT OF TRANSPORTATION
NORTH REGION
DIVISION OF ENGINEERING
Caltrans®

FUNCTIONAL SUPERVISOR: CARLOS A. PORTILLO

CALCULATED-DESIGNED BY: MAHBOOBEH DEILAMI
CHECKED BY: FERMIN BARRIGA

REVISED BY	DATE REVISED

LAST REVISION: DATE PLOTTED => 18-MAR-2015; TIME PLOTTED => 15:08
04-16-14

BORDER LAST REVISED 7/2/2010

USERNAME => s130875
DGN FILE => 0300000224ea015.dgn

RELATIVE BORDER SCALE IS IN INCHES 0 1 2 3

UNIT 0305

PROJECT NUMBER & PHASE 03000002241

Dist	COUNTY	ROUTE	POST MILES TOTAL PROJECT	SHEET No.	TOTAL SHEETS
03	ED	89	13.8/18.0	20	164

Fermin Barriga 6-9-14
REGISTERED CIVIL ENGINEER DATE

FERMIN BARRIGA No. C47047 Exp. 12-31-15 CIVIL — REGISTERED PROFESSIONAL ENGINEER — STATE OF CALIFORNIA

6-16-14
PLANS APPROVAL DATE

THE STATE OF CALIFORNIA OR ITS OFFICERS OR AGENTS SHALL NOT BE RESPONSIBLE FOR THE ACCURACY OR COMPLETENESS OF SCANNED COPIES OF THIS PLAN SHEET.

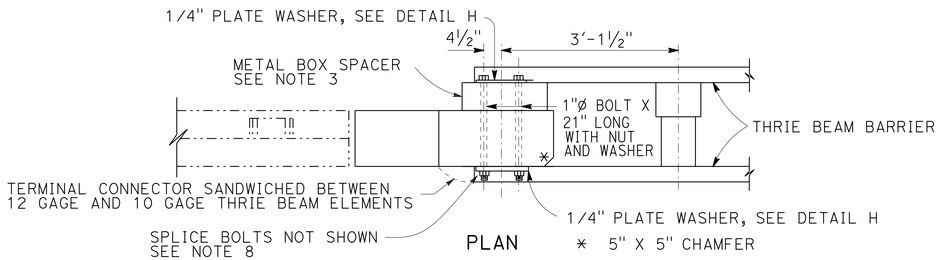

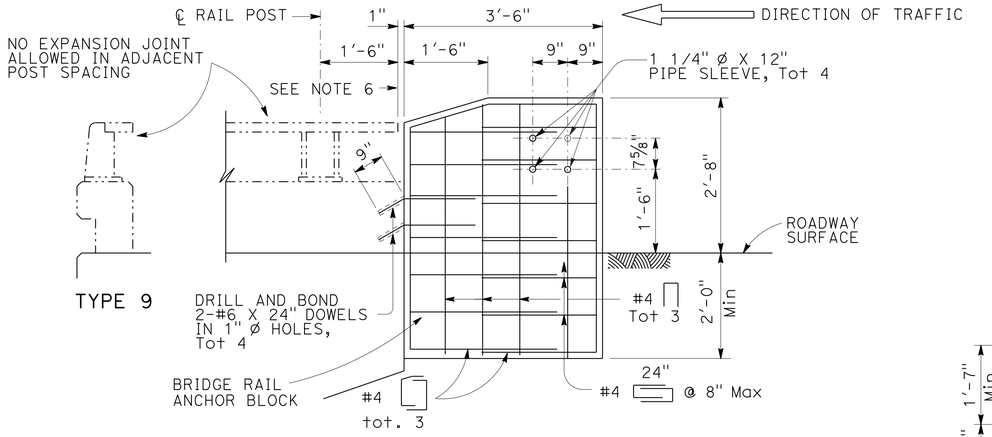

ELEVATION

EXISTING BARRIER RAILING TYPE 9 ALTERNATIVE 1

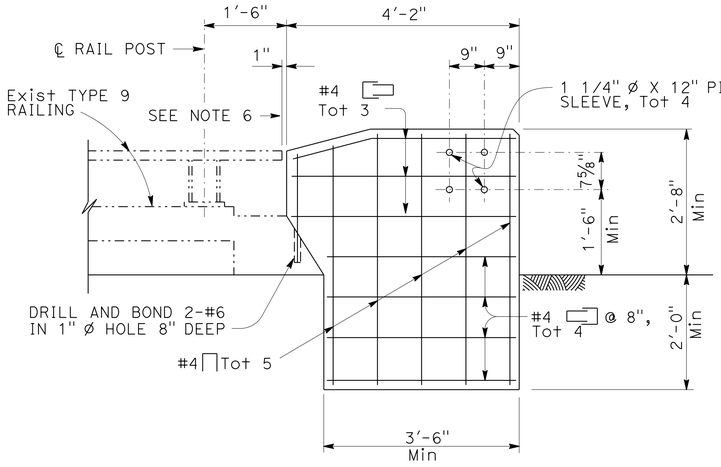

ELEVATION

EXISTING BARRIER RAILING TYPE 9 ALTERNATIVE 3

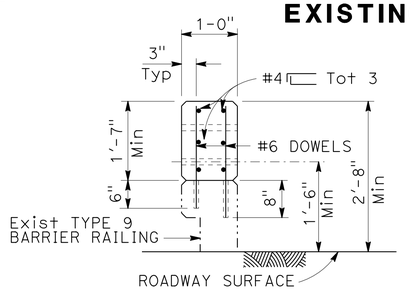

SECTION C-C

NOTES:

1. FOR DETAILS NOT SHOWN, SEE MBGR CONSTRUCTION DETAILS.
2. DEPENDENT DIMENSIONS WILL BE VERIFIED IN THE FIELD BEFORE FABRICATING ANY END CONNECTION TO CONFORM WITH EXISTING PAVED CONDITIONS.
3. WHEN END SECTION IS CALLED FOR, MODIFY TYPICAL TERMINAL SECTION TO FIT. SEE SHEET C-2, DETAIL E.
4. FOR THRIE BEAM CONNECTION, SEE STANDARD PLANS "THRIE BEAM BARRIER CONNECTIONS TO BRIDGE RAILING."
5. ALL PLATES AND BOLTS ARE GALVANIZED.
6. CUT AND REMOVE THAT PORTION OF TYPE 9, 9-11 AND BAGR AS REQUIRED.
7. IF RAIL IS NOT CONTINUOUS OVER 2 POSTS, USE SPLICE AT EXPANSION JOINT, SEE SHEET C-2.
8. EXTERIOR SPLICE BOLT HOLES SHALL BE THE STANDARD 7/8" X 1 1/8" SLOT SIZE FOR RAIL SPLICES AT POST # T4 AND THE CONNECTION TO THE CONCRETE BARRIER OR RAILING. INTERIOR SPLICE BOLT HOLES MAY BE INCREASED UP TO 1 1/8" DIA. WASHERS SHALL BE USED WITH SPLICE BOLTS ON BACK SIDE OF RAIL ELEMENT AT POST # T4 AND CONNECTION TO THE CONCRETE BARRIER OR RAILING.
9. TAPER THE TOP OF THE END OF THE BRIDGE RAILING AT 4:1 TO MATCH THE TOP ELEVATION OF THE THRIE BEAM RAIL ELEMENT.
10. BRIDGE RAIL ANCHOR BLOCKS SHALL BE SHIELDED FROM TRAFFIC UNTIL FINAL MBGR CONNECTION OCCURS.

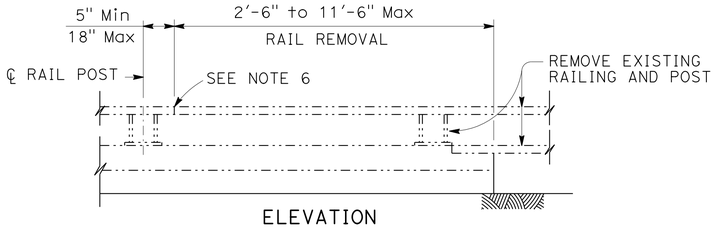

ELEVATION
RAIL REMOVAL

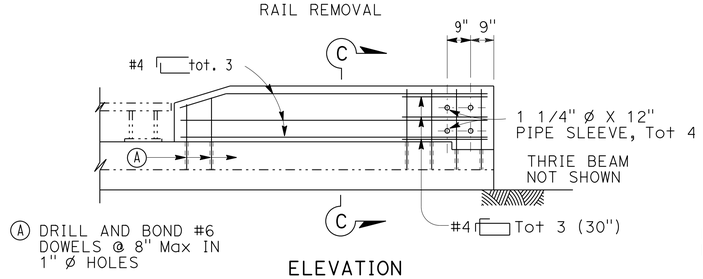

ELEVATION
NEW END POST

EXISTING BARRIER RAILING TYPE 9 ALTERNATIVE 2

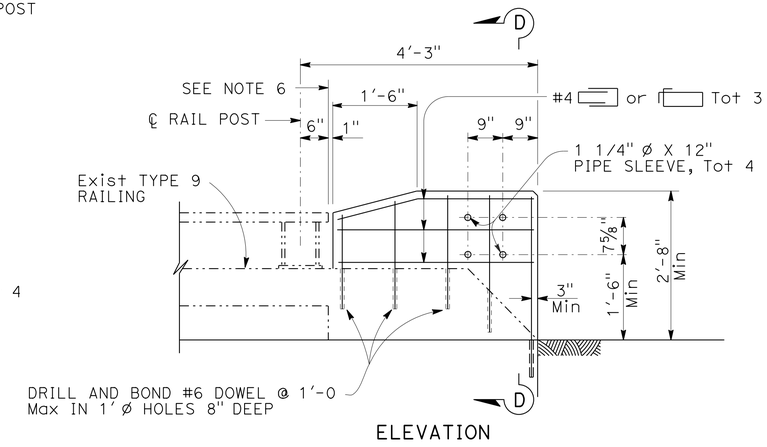

ELEVATION

EXISTING BARRIER RAILING TYPE 9 ALTERNATIVE 4

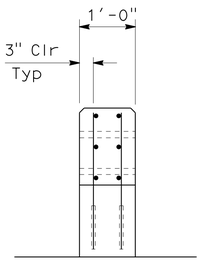

SECTION D-D

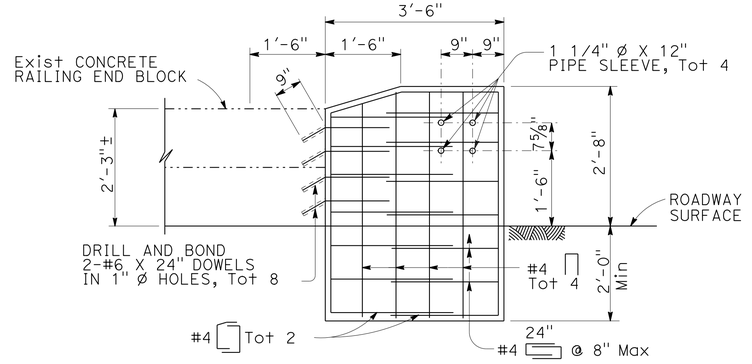

ELEVATION

EXISTING BARRIER RAILING TYPE 9 ALTERNATIVE 5

CASCADE CREEK BRIDGE: MINOR CONCRETE (MINOR STRUCTURE)

(STA "A3" 238+67 TO STA "A3" 239+09)

CONSTRUCTION DETAILS
THRIE BEAM CONNECTION DETAILS
BARRIER RAILING TYPE 9

NO SCALE

C-1

STATE OF CALIFORNIA - DEPARTMENT OF TRANSPORTATION
NORTH REGION
DIVISION OF ENGINEERING
Caltrans
FUNCTIONAL SUPERVISOR: CARLOS A. PORTILLO
CALCULATED-DESIGNED BY: FERMIN BARRIGA
CHECKED BY: MAHBOOBEH DEILAMI
REVISED BY
DATE REVISED

LAST REVISION | DATE PLOTTED => 18-MAR-2015
01-31-14 | TIME PLOTTED => 15:08

Dist	COUNTY	ROUTE	POST MILES TOTAL PROJECT	SHEET No.	TOTAL SHEETS
03	ED	89	13.8/18.0	21	164

Fermin Barriga 6-9-14
REGISTERED CIVIL ENGINEER DATE

6-16-14
PLANS APPROVAL DATE

REGISTERED PROFESSIONAL ENGINEER — FERMIN BARRIGA — No. C47047 — Exp. 12-31-15 — CIVIL — STATE OF CALIFORNIA

THE STATE OF CALIFORNIA OR ITS OFFICERS OR AGENTS SHALL NOT BE RESPONSIBLE FOR THE ACCURACY OR COMPLETENESS OF SCANNED COPIES OF THIS PLAN SHEET.

NOTES:

1. WITHIN THESE Sta LIMITS, SOME STEEL POSTS ARE CONNECTED TO CONCRETE POST SUPPORTS. MBGR POSTS ARE TO USE THESE CONCRETE POST SUPPORTS AS SHOWN ON THIS SHEET.
2. 2 EA ¾" DIA X 1'-7" HS BOLTS (THREADED BOTH ENDS) WITH 3 EA HEX NUTS AND 3" X 6" X ¼" FLAT WASHER.
3. BOLT SPACING AND DRILLED HOLES IN WASHERS SHALL BE 2⅜" APART.

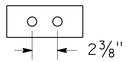

4. IF THE ENGINEER DETERMINES THAT THE EXISTING ANCHORS CAN NOT BE REUSED, THEN LEAVE THE EXISTING POST AND ANCHORS IN PLACE AS THEY ARE.

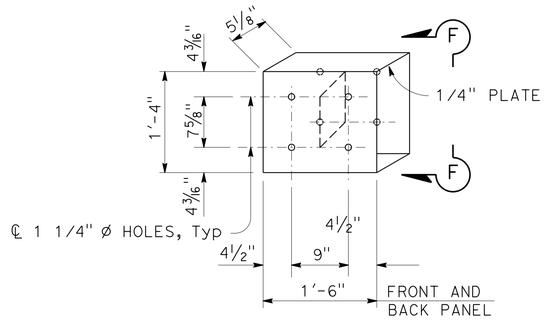

DETAIL E

SEE NOTE 3 ON SHEET C-1

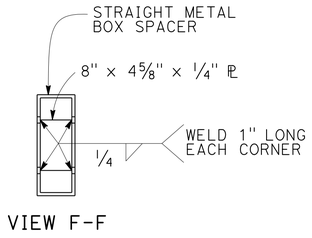

VIEW F-F

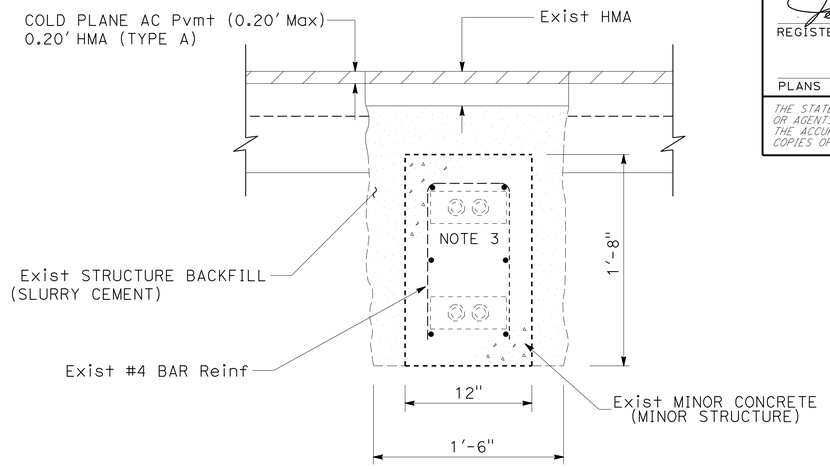

SECTION A-A

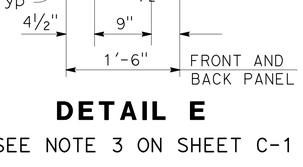

DETAIL H

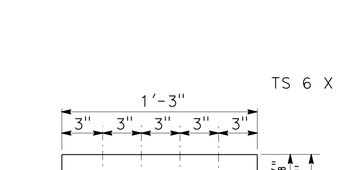

SPLICE PLATE

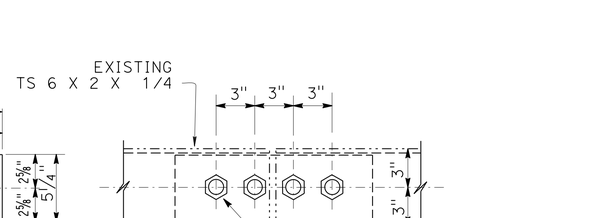

MODIFIED TUBE

RAIL SPLICE DETAIL

SEE NOTE 7 ON SHEET C-1

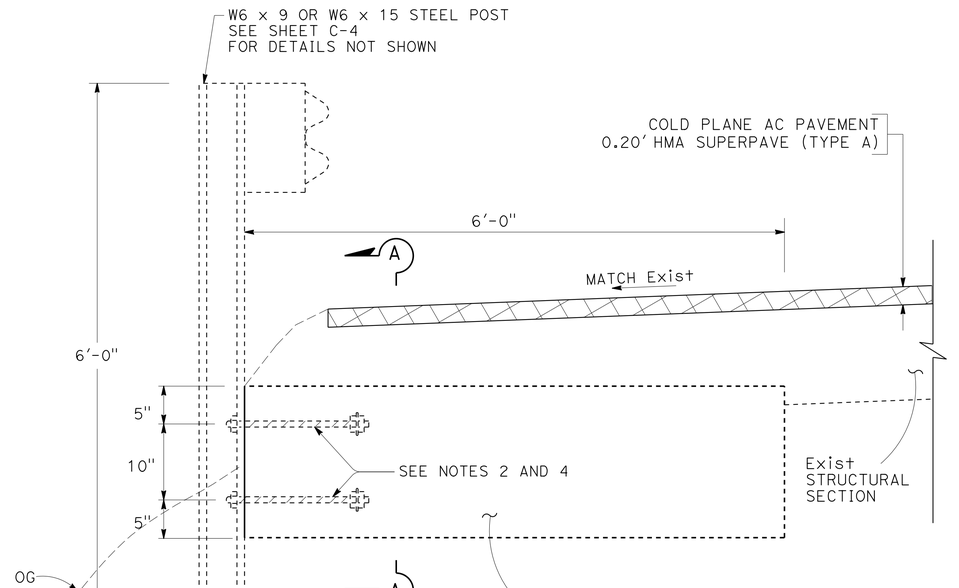

Exist TYPICAL CONCRETE POST SUPPORT DETAIL

STA "A3" 199+10.08 TO STA "A3" 203+57.05
STA "A3" 209+00.55 TO STA "A3" 212+30.03
STA "A3" 292+66.18 TO STA "A3" 296+57.86
STA "A3" 308+64.55 TO STA "A3" 330+69.28
STA "A3" 335+46.60 TO STA "A3" 337+58.89

(SEE NOTE 1)

CONSTRUCTION DETAILS

NO SCALE **C-2**

REVISED BY | DATE REVISED
FERMIN BARRIGA | MAHBOOBEH DEILAMI
CALCULATED-DESIGNED BY | CHECKED BY
FUNCTIONAL SUPERVISOR: CARLOS A. PORTILLO
STATE OF CALIFORNIA - DEPARTMENT OF TRANSPORTATION
Caltrans
NORTH REGION
DIVISION OF ENGINEERING

LAST REVISION | DATE PLOTTED => 18-MAR-2015
05-30-14 | TIME PLOTTED => 15:08

BORDER LAST REVISED 7/2/2010 | USERNAME => s130875 | DGN FILE => 0300000224ga002.dgn | RELATIVE BORDER SCALE IS IN INCHES 0 1 2 3 | UNIT 0305 | PROJECT NUMBER & PHASE 03000002241

Dist	COUNTY	ROUTE	POST MILES TOTAL PROJECT	SHEET No.	TOTAL SHEETS
03	ED	89	13.8/18.0	22	164

Fermin Barriga 6-9-14
REGISTERED CIVIL ENGINEER DATE

FERMIN BARRIGA No. C47047 Exp. 12-31-15 CIVIL — REGISTERED PROFESSIONAL ENGINEER — STATE OF CALIFORNIA

6-16-14
PLANS APPROVAL DATE

THE STATE OF CALIFORNIA OR ITS OFFICERS OR AGENTS SHALL NOT BE RESPONSIBLE FOR THE ACCURACY OR COMPLETENESS OF SCANNED COPIES OF THIS PLAN SHEET.

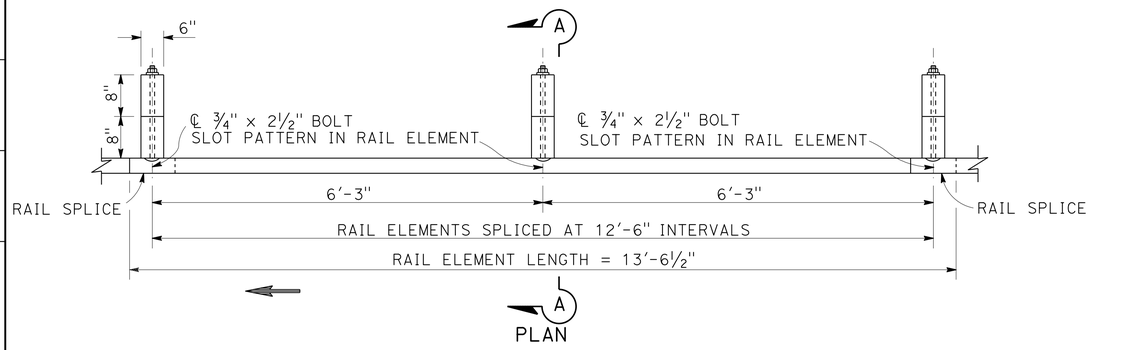

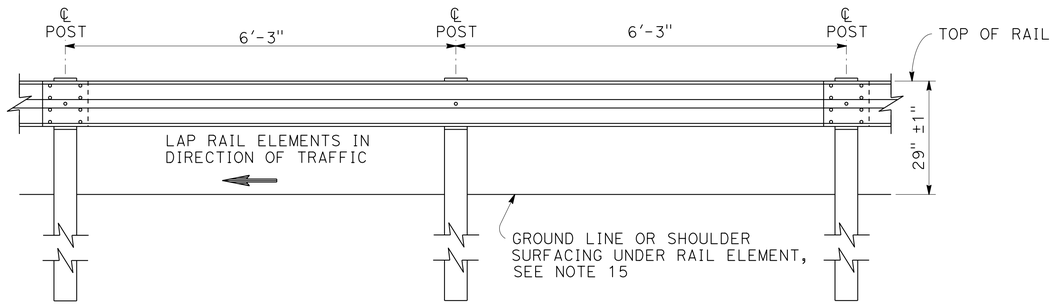

ELEVATION

METAL BEAM GUARD RAILING WITH WOOD POST AND BLOCKS

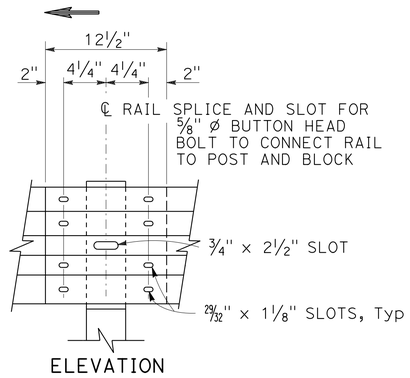

ELEVATION

RAIL ELEMENT SPLICE DETAIL

A) CONNECT THE OVER LAPPED END OF THE RAIL ELEMENTS WITH ⅝" ø X 1 ⅜" BUTTON HEAD OVAL SHOULDER SPLICE BOLTS INSERTED INTO THE 13/16" X 1 ⅛" SLOTS AND BOLTED TOGETHER WITH ⅝" ø RECESSED HEX NUTS. RECESS OF HEX NUT POINTS TOWARD RAIL ELEMENT. A TOTAL OF 8 BOLTS AND NUTS ARE TO BE USED AT EACH RAIL SPLICE CONNECTION.

B) THE ENDS OF THE RAIL ELEMENTS ARE TO BE OVERLAPPED IN THE DIRECTION OF TRAFFIC (SEE DETAILS).

C) WHERE END CAP IS TO BE ATTACHED TO THE END OF A RAIL ELEMENT, A TOTAL OF 4 OF THE ABOVE DESCRIBED SPLICE BOLTS AND NUTS ARE TO BE USED.

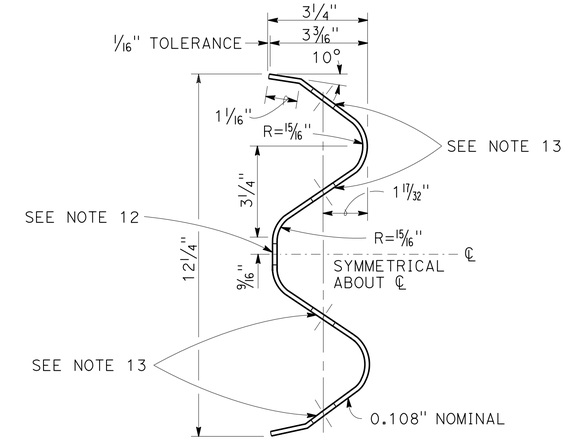

SECTION THRU RAIL ELEMENT

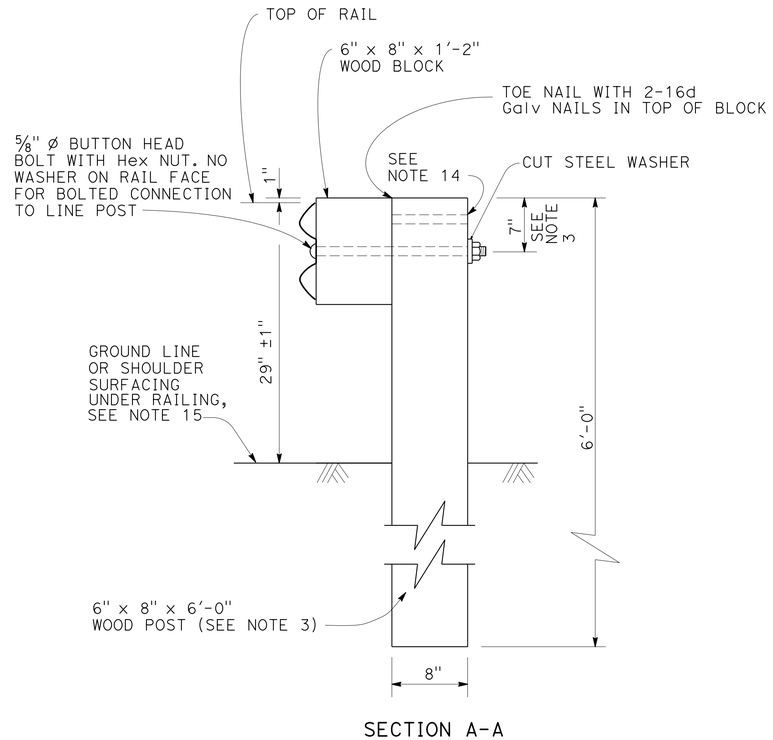

SECTION A-A

TYPICAL WOOD LINE POST INSTALLATION

SEE NOTE 4

NOTES:

1. FOR DETAILS OF STEEL POST INSTALLATIONS, SEE SHEET C-4.
2. FOR DETAILS OF STANDARD HARDWARE USED TO CONSTRUCT GUARD RAILING, SEE SHEET C-5.
3. FOR DETAILS OF WOOD POSTS AND WOOD BLOCKS USED TO CONSTRUCT GUARD RAILING, SEE SHEET C-6.
4. FOR ADDITIONAL INSTALLATION DETAILS, SEE SHEET C-8.
5. GUARD RAILING POST SPACING TO BE 6'-3" CENTER TO CENTER, EXCEPT AS OTHERWISE NOTED.
6. FOR GUARD RAILING TYPICAL LAYOUTS, SEE SHEETS C-10 TO C-13.
7. TO CONNECT RAILING TO TERMINAL SYSTEM END TREATMENT, TRANSITION THE TOP OF RAILING HEIGHT AT A RATIO OF 120:1 TO TERMINAL SYSTEM END TREATMENT HEIGHT PLUS ONE 12'-6" STANDARD RAILING SECTION AT THE TRANSITIONED HEIGHT FOR A HORIZONTAL CONNECTION TO THE END TREATMENT.
8. FOR DETAILS OF GUARD RAILING TRANSITION TO BRIDGE RAILING, SEE SHEET C-16.
9. FOR ADDITIONAL DETAILS OF GUARD RAILING CONNECTION TO BRIDGE RAILINGS, SEE SHEETS C-14 AND C-15.
10. DIRECTION OF ADJACENT TRAFFIC INDICATED BY →.
11. FOR TYPICAL GUARD RAILING DELINEATION AND DIKE POSITIONING DETAILS, SEE SHEET C-9.
12. SLOTTED HOLE FOR BOLTED CONNECTION OF RAIL ELEMENT TO BLOCK AND POST. SEE "SECTION THRU RAIL ELEMENT".
13. SLOTTED HOLES FOR SPLICE BOLTS TO OVERLAP ENDS OF RAIL ELEMENT. SEE "SECTION THRU RAIL ELEMENT".
14. ADDITIONAL HOLE IN UPPERMOST PORTION OF LINE POST IS FOR POTENTIAL FUTURE ADJUSTMENTS OF RAILING HEIGHT. SEE SHEET C-6.
15. INSTALL POSTS IN SOIL.

CONSTRUCTION DETAILS

METAL BEAM GUARD RAILING STANDARD RAILING SECTION

(WOOD POST WITHWOOD BLOCK)

NO SCALE

C-3

STATE OF CALIFORNIA - DEPARTMENT OF TRANSPORTATION
NORTH REGION
DIVISION OF ENGINEERING
Caltrans

FUNCTIONAL SUPERVISOR: CARLOS A. PORTILLO

CALCULATED-DESIGNED BY: FERMIN BARRIGA
CHECKED BY: MAHBOOBEH DEILAMI

REVISED BY | DATE REVISED

LAST REVISION | DATE PLOTTED => 18-MAR-2015
02-26-14 | TIME PLOTTED => 15:08

BORDER LAST REVISED 7/2/2010 | USERNAME => s130875 | DGN FILE => 0300000224ga003.dgn | RELATIVE BORDER SCALE IS IN INCHES 0 1 2 3 | UNIT 0305 | PROJECT NUMBER & PHASE 03000002241

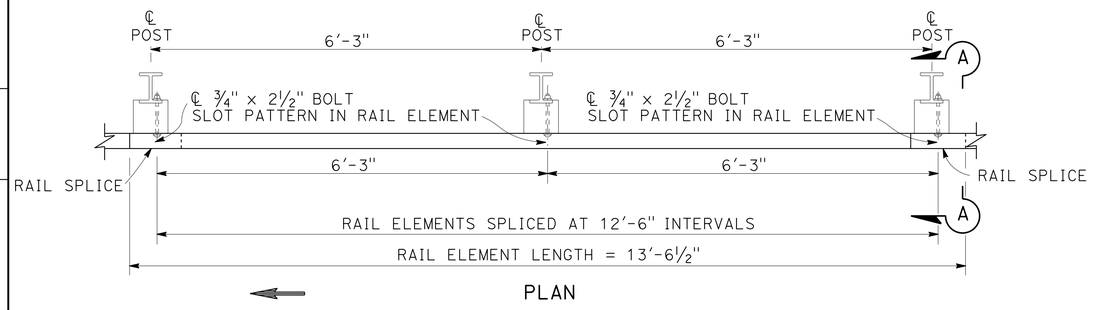

PLAN

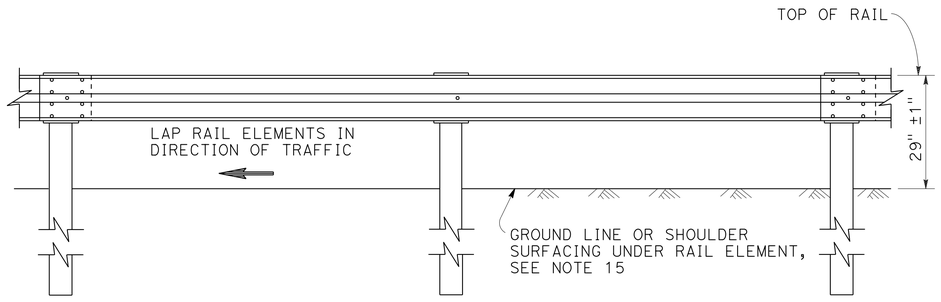

ELEVATION

METAL BEAM GUARD RAILING WITH STEEL POSTS AND NOTCHED WOOD OR NOTCHED RECYCLED PLASTIC BLOCKS

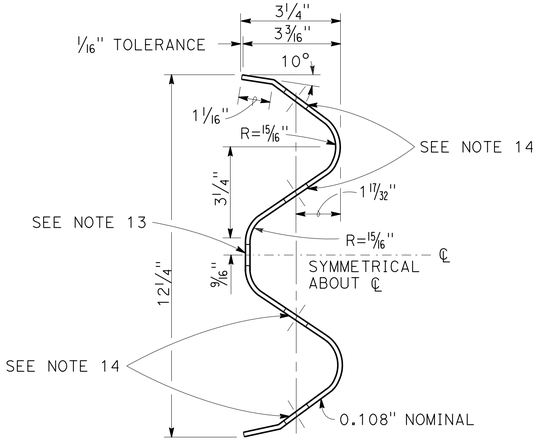

SECTION THRU RAIL ELEMENT

NOTES:

1. FOR DETAILS OF WOOD POST INSTALLATIONS, SEE SHEET C-3.
2. FOR DETAILS OF STANDARD HARDWARE USED TO CONSTRUCT GUARD RAILING, SEE SHEET C-5.
3. FOR DETAILS OF STEEL POSTS AND NOTCHED WOOD BLOCKS USED TO CONSTRUCT GUARD RAILING, SEE SHEET C-7.
4. FOR ADDITIONAL INSTALLATION DETAILS, SEE SHEET C-8.
5. GUARD RAILING POST SPACING TO BE 6'-3" CENTER TO CENTER, EXCEPT AS OTHERWISE NOTED.
6. FOR GUARD RAILING TYPICAL LAYOUTS, SEE SHEETS C-10 TO C-13.
7. TO CONNECT RAILING TO TERMINAL SYSTEM END TREATMENT, TRANSITION THE TOP OF RAILING HEIGHT AT A RATIO OF 120:1 TO TERMINAL SYSTEM END TREATMENT HEIGHT PLUS ONE 12'-6" STANDARD RAILING SECTION AT THE TRANSITIONED HEIGHT FOR A HORIZONTAL CONNECTION TO THE END TREATMENT.
8. FOR DETAILS OF GUARD RAILING TRANSITION TO BRIDGE RAILING, SEE SHEET C-16.
9. FOR ADDITIONAL DETAILS OF GUARD RAILING CONNECTION TO BRIDGE RAILINGS, SEE SHEETS C-14 TO C-15.
10. FOR DIKE POSITIONING AND GUARD RAILING DELINEATION DETAILS, SEE SHEET C-9.
11. DIRECTION OF ADJACENT TRAFFIC INDICATED BY → .
12. NOTCHED FACE OF BLOCK FACES STEEL POST.
13. SLOTTED HOLE FOR BOLTED CONNECTION OF RAIL ELEMENT TO BLOCK AND POST. SEE "SECTION THRU RAIL ELEMENT".
14. SLOTTED HOLES FOR SPLICE BOLTS TO OVERLAP ENDS OF RAIL ELEMENT. SEE "SECTION THRU RAIL ELEMENT".
15. INSTALL STEEL POSTS AS SHOWN IN SHEET C-2 ATTACHED TO Exist CONCRETE POST SUPPORTS.

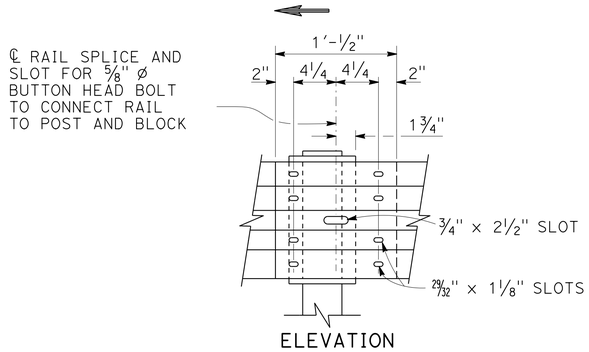

ELEVATION

RAIL ELEMENT SPLICE DETAIL

A) CONNECT THE OVER LAPPED END OF THE RAIL ELEMENTS WITH ⅝" ø X 1 ⅜" BUTTON HEAD OVAL SHOULDER SPLICE BOLTS INSERTED INTO THE 13⁄16" X 1 ⅛" SLOTS AND BOLTED TOGETHER WITH ⅝" ø RECESSED HEX NUTS. RECESS OF HEX NUT POINTS TOWARD RAIL ELEMENT. A TOTAL OF 8 BOLTS AND NUTS ARE TO BE USED AT EACH RAIL SPLICE CONNECTION.

B) THE ENDS OF THE RAIL ELEMENTS ARE TO BE OVERLAPPED IN THE DIRECTION OF TRAFFIC (SEE DETAILS).

C) WHERE END CAP IS TO BE ATTACHED TO THE END OF A RAIL ELEMENT, A TOTAL OF 4 OF THE ABOVE DESCRIBED SPLICE BOLTS AND NUTS ARE TO BE USED.

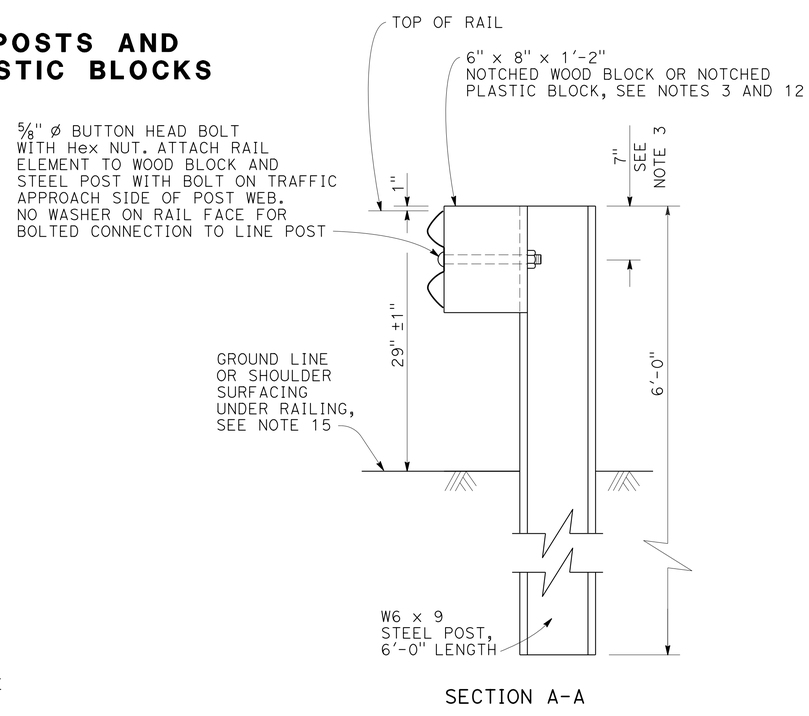

SECTION A-A

TYPICAL STEEL LINE POST INSTALLATION

SEE NOTE 4

CONSTRUCTION DETAILS
METAL BEAM GUARD RAILING
STANDARD RAILING SECTION
(STEEL POST WITH NOTCHED WOOD OR NOTCHED RECYCLED PLASTIC BLOCK)

NO SCALE

C-4

Dist	COUNTY	ROUTE	POST MILES TOTAL PROJECT	SHEET No.	TOTAL SHEETS
03	ED	89	13.8/18.0	23	164

Fermin Barriga 6-9-14
REGISTERED CIVIL ENGINEER DATE

6-16-14
PLANS APPROVAL DATE

REGISTERED PROFESSIONAL ENGINEER — FERMIN BARRIGA — No. C47047 — Exp. 12-31-15 — CIVIL — STATE OF CALIFORNIA

THE STATE OF CALIFORNIA OR ITS OFFICERS OR AGENTS SHALL NOT BE RESPONSIBLE FOR THE ACCURACY OR COMPLETENESS OF SCANNED COPIES OF THIS PLAN SHEET.

REVISED BY | DATE REVISED
FERMIN BARRIGA | MAHBOOBEH DEILAMI
CALCULATED-DESIGNED BY | CHECKED BY
FUNCTIONAL SUPERVISOR: CARLOS A. PORTILLO

STATE OF CALIFORNIA - DEPARTMENT OF TRANSPORTATION
Caltrans
NORTH REGION DIVISION OF ENGINEERING

LAST REVISION | DATE PLOTTED => 18-MAR-2015
04-09-14 | TIME PLOTTED => 15:08

BORDER LAST REVISED 7/2/2010 | USERNAME => s130875 | DGN FILE => 0300000224ga004.dgn | RELATIVE BORDER SCALE IS IN INCHES 0 1 2 3 | UNIT 0305 | PROJECT NUMBER & PHASE 03000002241

Dist	COUNTY	ROUTE	POST MILES TOTAL PROJECT	SHEET No.	TOTAL SHEETS
03	ED	89	13.8/18.0	24	164

Fermin Barriga B. 6-9-14
REGISTERED CIVIL ENGINEER DATE

6-16-14
PLANS APPROVAL DATE

REGISTERED PROFESSIONAL ENGINEER
FERMIN BARRIGA
No. C47047
Exp. 12-31-15
CIVIL
STATE OF CALIFORNIA

THE STATE OF CALIFORNIA OR ITS OFFICERS OR AGENTS SHALL NOT BE RESPONSIBLE FOR THE ACCURACY OR COMPLETENESS OF SCANNED COPIES OF THIS PLAN SHEET.

NOTE:

1. SLOTTED HOLES FOR SPLICE BOLTS TO OVERLAP ENDS OF RAIL ELEMENT.

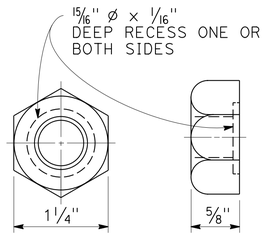

5/8" ø RECESS NUT

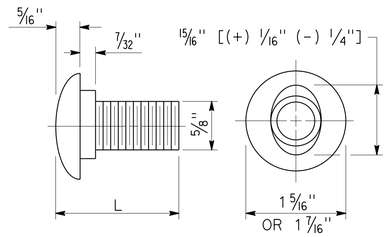

5/8" ø BUTTON HEAD BOLT

L	THREAD LENGTH
1 3/8"	FULL THREAD LENGTH
2"	FULL THREAD LENGTH
10"	4" Min THREAD LENGTH
18"	4" Min THREAD LENGTH
20"	4" Min THREAD LENGTH
22"	4" Min THREAD LENGTH
** 2 3/4"	2" Min THREAD LENGTH
** 19"	4" Min THREAD LENGTH

** FOR NESTED RAIL APPLICATIONS.

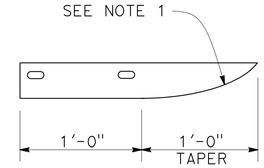

PLAN

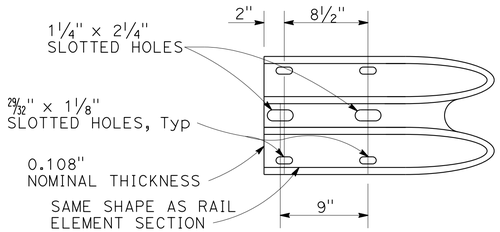

ELEVATION

END CAP (TYPE A)

CONSTRUCTION DETAILS
METAL BEAM GUARD RAILING
STANDARD HARDWARE

NO SCALE

C-5

STATE OF CALIFORNIA - DEPARTMENT OF TRANSPORTATION
Caltrans
NORTH REGION
DIVISION OF ENGINEERING

FUNCTIONAL SUPERVISOR: CARLOS A. PORTILLO

CALCULATED-DESIGNED BY: FERMIN BARRIGA
CHECKED BY: MAHBOOBEH DEILAMI

REVISED BY	DATE REVISED

LAST REVISION 02-26-14
DATE PLOTTED => 18-MAR-2015
TIME PLOTTED => 15:08

Dist	COUNTY	ROUTE	POST MILES TOTAL PROJECT	SHEET No.	TOTAL SHEETS
03	ED	89	13.8/18.0	25	164

Fermin Barriga B. 6-9-14
REGISTERED CIVIL ENGINEER DATE

FERMIN BARRIGA No. C47047 Exp. 12-31-15 CIVIL — REGISTERED PROFESSIONAL ENGINEER — STATE OF CALIFORNIA

6-16-14
PLANS APPROVAL DATE

THE STATE OF CALIFORNIA OR ITS OFFICERS OR AGENTS SHALL NOT BE RESPONSIBLE FOR THE ACCURACY OR COMPLETENESS OF SCANNED COPIES OF THIS PLAN SHEET.

NOTES:

1. ALL HOLES IN WOOD POSTS AND BLOCKS SHALL BE ¾" DIA ± 1/16".
2. DIMENSIONS SHOWN FOR WOOD POST ARE NOMINAL.
3. THIS POST AND BLOCK COMBINATION USED FOR STANDARD LINE POST SECTIONS OF GUARD RAILING.
4. THIS POST AND 8" X 8" BLOCK COMBINATION USED FOR LINE POST SECTIONS OF GUARD RAILING ON NARROW ROADWAYS.
5. THIS POST AND 8" X 8" BLOCK COMBINATION IS TYPICALLY USED WHERE STRENGTHENED LINE POST SECTIONS OF GUARD RAILINGS ARE WARRANTED TO SHIELD FIXED OBJECTS.

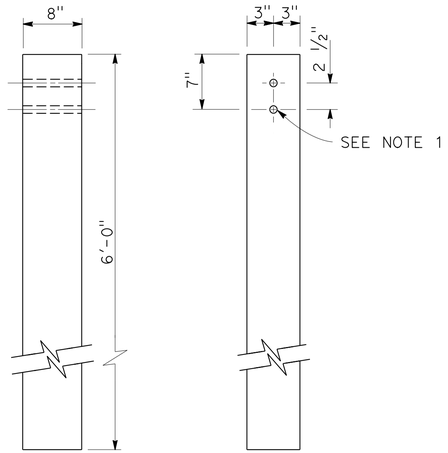

6" X 8" WOOD POST
SEE NOTE 3

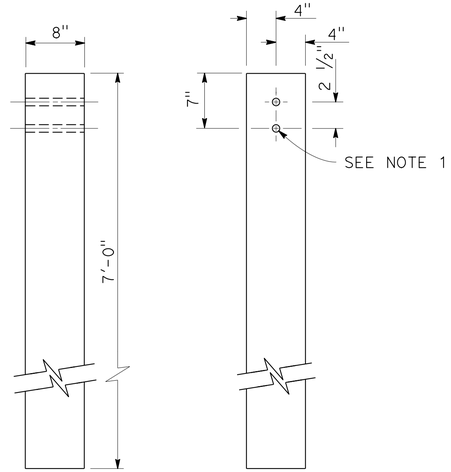

8" X 8" WOOD POST
SEE NOTE 4

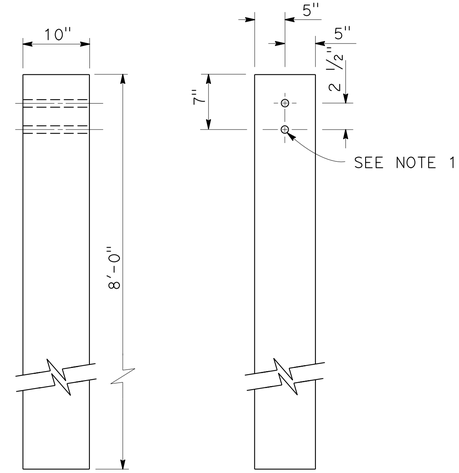

10" X 10" WOOD POST
SEE NOTE 5

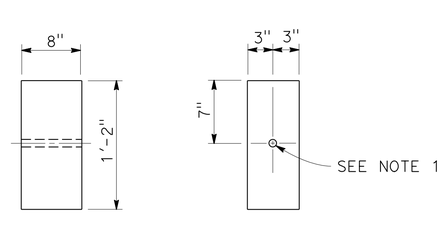

6" X 8" WOOD BLOCK
SEE NOTE 3

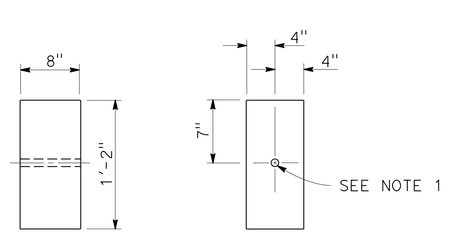

8" X 8" WOOD BLOCK

CONSTRUCTION DETAILS
METAL BEAM GUARD RAILING WOOD POST AND WOOD BLOCK DETAILS

NO SCALE

C-6

LAST REVISION DATE PLOTTED => 18-MAR-2015
02-26-14 TIME PLOTTED => 15:08

STATE OF CALIFORNIA - DEPARTMENT OF TRANSPORTATION
Caltrans®
NORTH REGION
DIVISION OF ENGINEERING

FUNCTIONAL SUPERVISOR: CARLOS A. PORTILLO

CALCULATED-DESIGNED BY: FERMIN BARRIGA
CHECKED BY: MAHBOOBEH DEILAMI

REVISED BY | DATE REVISED

BORDER LAST REVISED 7/2/2010

USERNAME => s130875
DGN FILE => 0300000224ga006.dgn

RELATIVE BORDER SCALE IS IN INCHES 0 1 2 3

UNIT 0305

PROJECT NUMBER & PHASE 03000002241

Dist	COUNTY	ROUTE	POST MILES TOTAL PROJECT	SHEET No.	TOTAL SHEETS
03	ED	89	13.8/18.0	26	164

Fermin Barriga B. 6-9-14
REGISTERED CIVIL ENGINEER DATE

FERMIN BARRIGA No. C47047 Exp. 12-31-15 CIVIL — REGISTERED PROFESSIONAL ENGINEER — STATE OF CALIFORNIA

6-16-14
PLANS APPROVAL DATE

THE STATE OF CALIFORNIA OR ITS OFFICERS OR AGENTS SHALL NOT BE RESPONSIBLE FOR THE ACCURACY OR COMPLETENESS OF SCANNED COPIES OF THIS PLAN SHEET.

NOTES:

1. ALL HOLES IN STEEL POST SHALL BE 13/16" DIA MAXIMUM.
2. DIMENSIONS SHOWN FOR WOOD BLOCK ARE NOMINAL.
3. NOTCHED FACE OF BLOCK FACES STEEL POST.
4. 6'-0" LENGTH POSTS TO BE USED FOR TYPICAL ROADWAY INSTALLATION. 7'-0" LENGTH POSTS TO BE USED FOR NARROW ROADWAY INSTALLATION (SEE SHEET C-8).

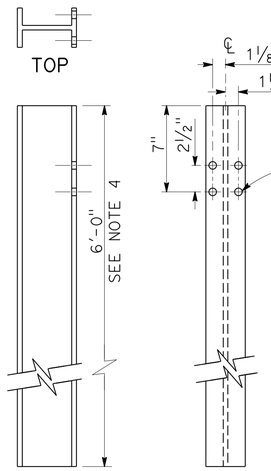

W6 x 9
STEEL POST
SEE NOTE 4

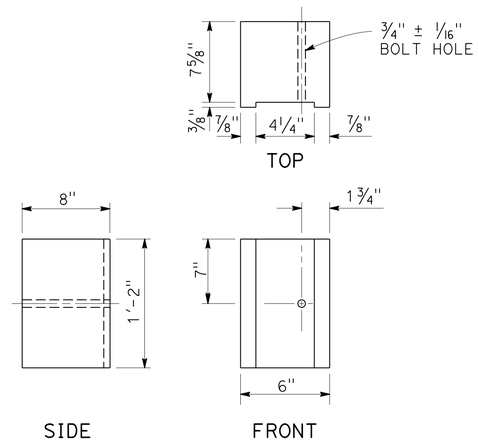

6" x 8"
NOTCHED WOOD BLOCK
SEE NOTES 2 AND 3

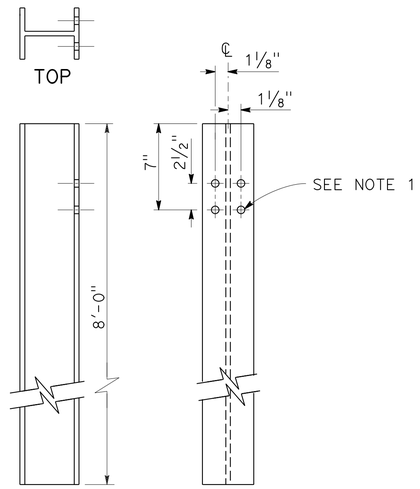

W6 x 15
STEEL POST

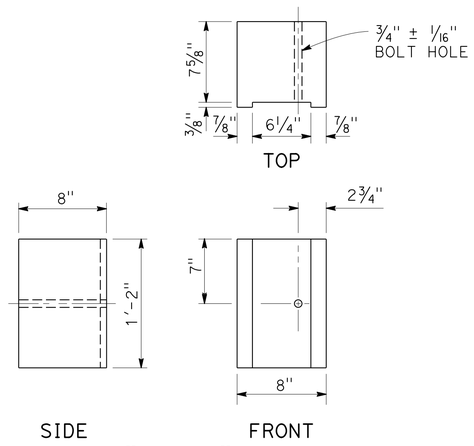

8" x 8"
NOTCHED WOOD BLOCK
SEE NOTES 2 AND 3

CONSTRUCTION DETAILS
METAL BEAM GUARD RAILINGSTEEL POST AND NOTCHED WOOD BLOCK DETAILS

NO SCALE

C-7

STATE OF CALIFORNIA - DEPARTMENT OF TRANSPORTATION
Caltrans
NORTH REGION
DIVISION OF ENGINEERING

FUNCTIONAL SUPERVISOR: CARLOS A. PORTILLO
CALCULATED-DESIGNED BY: FERMIN BARRIGA
CHECKED BY: MAHBOOBEH DEILAMI
REVISED BY
DATE REVISED

LAST REVISION: DATE PLOTTED => 18-MAR-2015; TIME PLOTTED => 15:08; 02-26-14

BORDER LAST REVISED 7/2/2010 | USERNAME => s130875 | DGN FILE => 0300000224ga007.dgn | RELATIVE BORDER SCALE IS IN INCHES 0 1 2 3 | UNIT 0305 | PROJECT NUMBER & PHASE 03000002241

Dist	COUNTY	ROUTE	POST MILES TOTAL PROJECT	SHEET No.	TOTAL SHEETS
03	ED	89	13.8/18.0	27	164

Fermin Barriga B. 6-9-14
REGISTERED CIVIL ENGINEER DATE

FERMIN BARRIGA No. C47067 Exp. 12-31-15 CIVIL — REGISTERED PROFESSIONAL ENGINEER — STATE OF CALIFORNIA

6-16-14
PLANS APPROVAL DATE

THE STATE OF CALIFORNIA OR ITS OFFICERS OR AGENTS SHALL NOT BE RESPONSIBLE FOR THE ACCURACY OR COMPLETENESS OF SCANNED COPIES OF THIS PLAN SHEET.

NOTES:

1. THESE INSTALLATION DETAILS ALSO APPLICABLE TO STEEL LINE POST INSTALLATIONS. FOR DETAIL A, C, AND D, WHERE STEEL LINE POST INSTALLATIONS ARE CONSTRUCTED, W6 X 9 STEEL POST, 6'-0" IN LENGTH, WITH 6" X 8" X 1'-2" NOTCHED WOOD BLOCKS OR NOTCHED RECYCLED PLASTIC BLOCKS ARE TO BE USED IN PLACE OF THE SIZE OF WOOD POST AND WOOD BLOCK SHOWN. FOR DETAIL B, WHERE STEEL LINE POST INSTALLATIONS ARE CONSTRUCTED, W6 X 9 STEEL POST, 6'-0" IN LENGTH, WITH 6" X 8" X 1'-2" NOTCHED WOOD BLOCKS OR NOTCHED RECYCLED PLASTIC BLOCKS ARE TO BE USED IN PLACE OF THE SIZE OF WOOD POST AND WOOD BLOCK SHOWN. FOR ADDITIONAL INSTALLATION DETAILS, SEE SHEETS C-3 AND C-4.
2. WHERE THE DISTANCE BETWEEN THE FACE OF THE RAIL AND THE HINGE POINT IS LESS THAN 2'-0", SEE THE PROJECT PLANS FOR SPECIAL DETAILS.
3. FOR DIKE POSITIONING WITH GUARD RAILING INSTALLATIONS, SEE SHEET C-9.

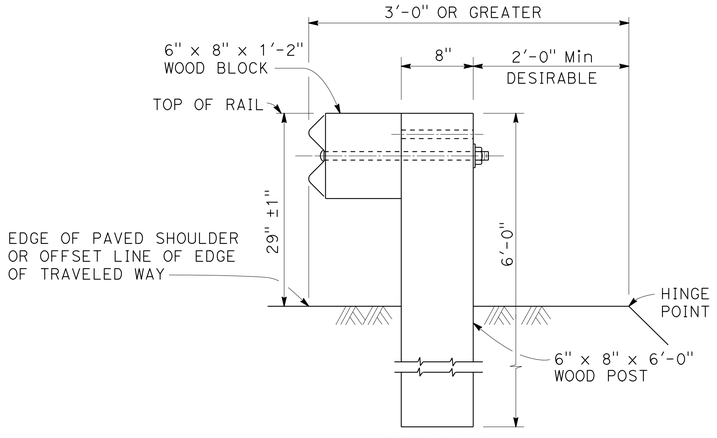

DETAIL A

TYPICAL ROADWAY INSTALLATION

SEE NOTE 1

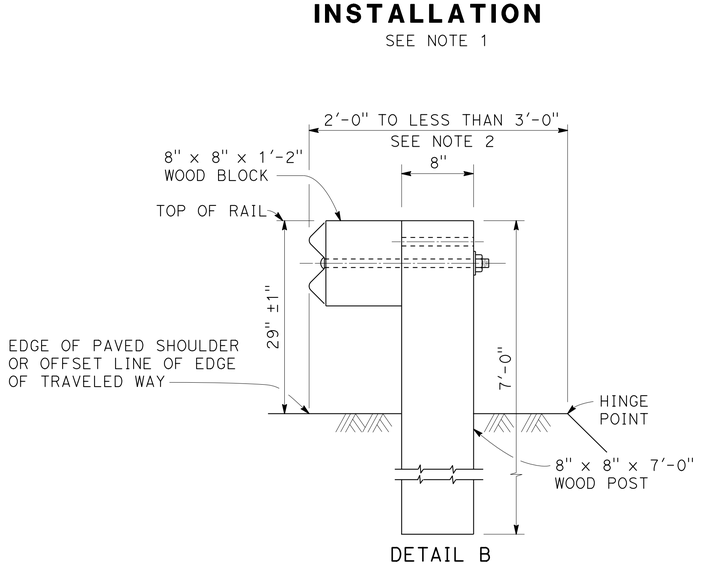

DETAIL B

NARROW ROADWAY INSTALLATION

SEE NOTE 1

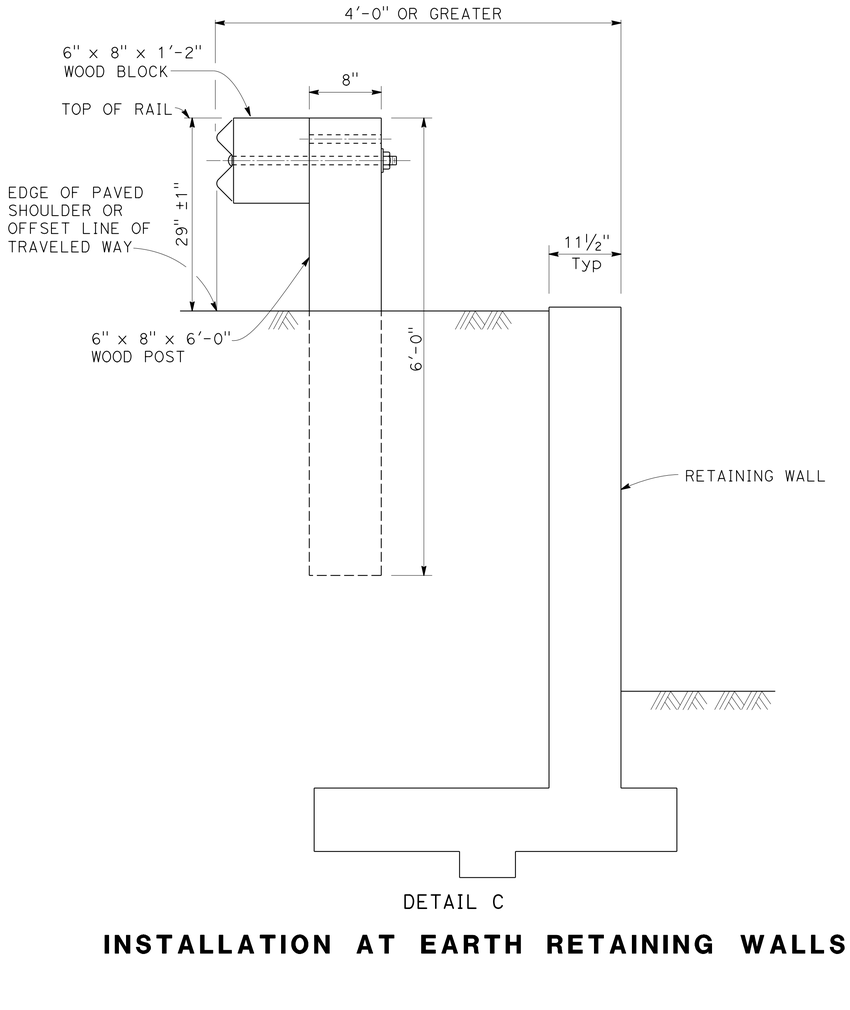

DETAIL C

INSTALLATION AT EARTH RETAINING WALLS

POST EMBEDMENT

CONSTRUCTION DETAILS
METAL BEAM GUARD RAILING
TYPICAL LINE POST EMBEDMENT AND HINGE POINT OFFSET DETAILS

NO SCALE

C-8

REVISED BY | DATE REVISED
FERMIN BARRIGA | MAHBOOBEH DEILAMI
CALCULATED-DESIGNED BY | CHECKED BY
FUNCTIONAL SUPERVISOR: CARLOS A. PORTILLO
STATE OF CALIFORNIA - DEPARTMENT OF TRANSPORTATION
NORTH REGION DIVISION OF ENGINEERING
Caltrans

LAST REVISION | DATE PLOTTED => 18-MAR-2015
04-09-14 | TIME PLOTTED => 15:08

BORDER LAST REVISED 7/2/2010 | USERNAME => s130875 | DGN FILE => 0300000224ga008.dgn | RELATIVE BORDER SCALE IS IN INCHES 0 1 2 3 | UNIT 0305 | PROJECT NUMBER & PHASE 03000002241

Dist	COUNTY	ROUTE	POST MILES TOTAL PROJECT	SHEET No.	TOTAL SHEETS
03	ED	89	13.8/18.0	28	164

Fermin Barriga B. 6-9-14
REGISTERED CIVIL ENGINEER DATE

6-16-14
PLANS APPROVAL DATE

REGISTERED PROFESSIONAL ENGINEER
FERMIN BARRIGA
No. C47047
Exp. 12-31-15
CIVIL
STATE OF CALIFORNIA

THE STATE OF CALIFORNIA OR ITS OFFICERS OR AGENTS SHALL NOT BE RESPONSIBLE FOR THE ACCURACY OR COMPLETENESS OF SCANNED COPIES OF THIS PLAN SHEET.

NOTES:

1. WHEN NECESSARY TO PLACE DIKE IN FRONT OF FACE OF GUARD RAILING, ONLY TYPE C DIKE MAY BE USED. FOR DIKE DETAILS, SEE STANDARD PLAN RSP A87B.

2. FOR STANDARD RAILING POST EMBEDMENT, SEE SHEET C-8.

3. WHEN DIKE OR PCC CURB IS PLACED UNDER GUARD RAILING, THE MAXIMUM HEIGHT OF THE DIKE OR PCC CURB SHALL BE 4". MOUNTABLE DIKE SHOULD NOT BE USED. FOR DIKE AND PCC CURB DETAILS, SEE C-21 AND STANDARD PLANS RSP A87A AND RSP A87B.

4. FOR DETAILS OF TYPICAL DISTANCE BETWEEN THE FACE OF RAIL AND HINGE POINT, SEE SHEET C-8.

5. FOR STEEL LINE POSTS, USE 1/4 - 20 SELF-TAPPING SCREWS IN 0.22" DIAMETER HOLES OR 1/4" BOLTS IN 9/32" DIAMETER HOLES.

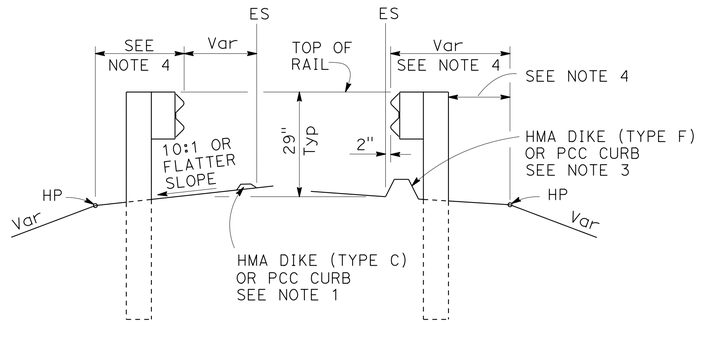

DIKE OR PCC CURB POSITIONING

CONSTRUCTION DETAILS

METAL BEAM GUARD RAILING TYPICAL RAILING DELINEATION AND DIKE OR PCC CURB POSITIONING DETAILS

NO SCALE

C-9

REVISED BY | DATE REVISED
FERMIN BARRIGA | MAHBOOBEH DEILAMI
CALCULATED-DESIGNED BY | CHECKED BY
FUNCTIONAL SUPERVISOR: CARLOS A. PORTILLO

STATE OF CALIFORNIA - DEPARTMENT OF TRANSPORTATION
Caltrans
NORTH REGION
DIVISION OF ENGINEERING

LAST REVISION: DATE PLOTTED => 18-MAR-2015
05-29-14 TIME PLOTTED => 15:08

BORDER LAST REVISED 7/2/2010
USERNAME => s130875
DGN FILE => 0300000224ga009.dgn
RELATIVE BORDER SCALE IS IN INCHES 0 1 2 3
UNIT 0305
PROJECT NUMBER & PHASE 03000002241

Dist	COUNTY	ROUTE	POST MILES TOTAL PROJECT	SHEET No.	TOTAL SHEETS
03	ED	89	13.8/18.0	29	164

Fermin Barriga 6-9-14
REGISTERED CIVIL ENGINEER DATE

6-16-14
PLANS APPROVAL DATE

REGISTERED PROFESSIONAL ENGINEER
FERMIN BARRIGA
No. C47047
Exp. 12-31-15
CIVIL
STATE OF CALIFORNIA

THE STATE OF CALIFORNIA OR ITS OFFICERS OR AGENTS SHALL NOT BE RESPONSIBLE FOR THE ACCURACY OR COMPLETENESS OF SCANNED COPIES OF THIS PLAN SHEET.

NOTES:

1. LINE POST, BLOCKS AND HARDWARE TO BE USED ARE SHOWN ON SHEETS C-3, C-4, C-5, C-6, AND C-7.
2. GUARD RAIL POST SPACING TO BE 6'-3" CENTER TO CENTER, EXCEPT AS OTHERWISE NOTED.
3. EXCEPT AS NOTED, LINE POSTS ARE 6" X 8" X 6'-0" WOOD WITH 6" X 8" X 1'-2" WOOD BLOCKS. W6 X 9 STEEL POSTS, 6'-0" IN LENGTH, WITH 6" X 8" X 1'-2" NOTCHED WOOD BLOCKS OR PLASTIC BLOCKS MAY BE USED FOR 6" X 8" X 6'-0" WOOD POST WITH 6" X 8" X 1'-2" WOOD BLOCKS WHERE APPLICABLE AND WHEN SPECIFIED.
4. DIRECTION OF ADJACENT TRAFFIC INDICATED BY ⟶.
5. LAYOUT TYPES 11D THROUGH 11E ARE TYPICALLY USED WHERE GUARD RAILING IS RECOMMENDED TO SHIELD EMBANKMENT SLOPES AND A CRASHWORTHY END TREATMENT IS REQUIRED FOR BOTH DIRECTIONS OF TRAFFIC.
6. IN-LINE TERMINAL SYSTEM END TREATMENTS ARE USED WHERE SITE CONDITIONS WILL NOT ACCOMMODATE A FLARED END TREATMENT.
7. THE TYPE OF TERMINAL SYSTEM END TREATMENT TO BE USED WILL BE SHOWN ON THE PROJECT PLANS.
8. DEPENDENT ON SITE CONDITIONS (EMBANKMENT HEIGHT AND SIDE SLOPE), CONSTRUCTION OF ADDITIONAL GUARD RAILING (LENGTH EQUAL TO MULTIPLES OF 12'-6" WITH 6'-3" POST SPACING) MAY BE ADVISABLE.
9. WHERE PLACEMENT OF DIKE IS REQUIRED WITH GUARD RAILING INSTALLATIONS, SEE SHEET C-9 FOR DIKE POSITIONING DETAILS.

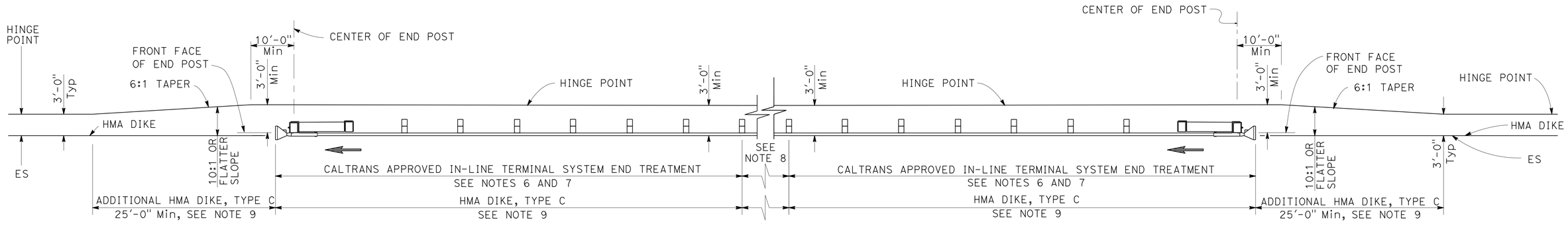

TYPE 11D LAYOUT

(EMBANKMENT GUARD RAILING INSTALLATION WITH IN-LINE END TREATMENT AT EACH END OF RAILING)
SEE NOTE 5

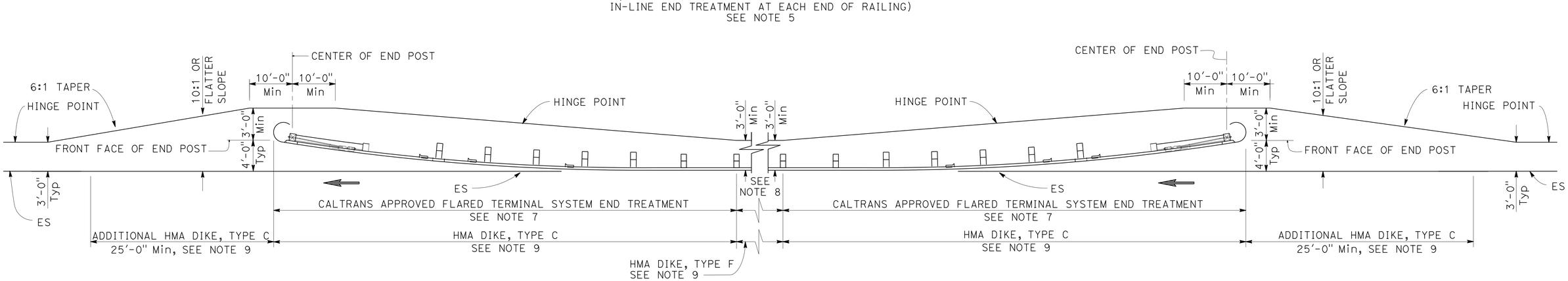

TYPE 11E LAYOUT

(EMBANKMENT GUARD RAILING INSTALLATION WITH FLARED END TREATMENT AT EACH END OF RAILING)
SEE NOTE 5

CONSTRUCTION DETAILS
METAL BEAM GUARD RAILING
TYPICAL LAYOUTS FOR EMBANKMENTS

NO SCALE

C-10

REVISED BY | DATE REVISED
FERMIN BARRIGA | MAHBOOBEH DEILAMI
CALCULATED-DESIGNED BY | CHECKED BY
FUNCTIONAL SUPERVISOR: CARLOS A. PORTILLO
STATE OF CALIFORNIA - DEPARTMENT OF TRANSPORTATION
Caltrans®
NORTH REGION
DIVISION OF ENGINEERING

LAST REVISION 04-09-14 | DATE PLOTTED => 18-MAR-2015 | TIME PLOTTED => 15:08

BORDER LAST REVISED 7/2/2010 | USERNAME => s130875 | DGN FILE => 0300000224ga010.dgn | RELATIVE BORDER SCALE IS IN INCHES 0 1 2 3 | UNIT 0305 | PROJECT NUMBER & PHASE 03000002241

Dist	COUNTY	ROUTE	POST MILES TOTAL PROJECT	SHEET No.	TOTAL SHEETS
03	ED	89	13.8/18.0	30	164

Fermin Barriga B. 6-9-14
REGISTERED CIVIL ENGINEER DATE

FERMIN BARRIGA No. C47047 Exp. 12-31-15 CIVIL — REGISTERED PROFESSIONAL ENGINEER — STATE OF CALIFORNIA

6-16-14
PLANS APPROVAL DATE

THE STATE OF CALIFORNIA OR ITS OFFICERS OR AGENTS SHALL NOT BE RESPONSIBLE FOR THE ACCURACY OR COMPLETENESS OF SCANNED COPIES OF THIS PLAN SHEET.

NOTES:

1. LINE POST, BLOCKS AND HARDWARE TO BE USED ARE SHOWN ON SHEETS C-3, C-4, C-5, C-6, AND C-7.
2. GUARD RAIL POST SPACING TO BE 6'-3" CENTER TO CENTER, EXCEPT AS OTHERWISE NOTED.
3. EXCEPT AS NOTED, LINE POSTS ARE 6" X 8" X 6'-0" WOOD WITH 6" X 8" X 1'-2" WOOD BLOCKS. W6 X 9 STEEL POSTS, 6'-0" IN LENGTH, WITH 6" X 8" X 1'-2" NOTCHED WOOD BLOCKS OR PLASTIC BLOCKS MAY BE USED FOR 6" X 8" X 6'-0" WOOD POST WITH 6" X 8" X 1'-2" WOOD BLOCKS WHERE APPLICABLE AND WHEN SPECIFIED.
4. DIRECTION OF ADJACENT TRAFFIC INDICATED BY ⟶.
5. LAYOUT TYPES 11I THROUGH 11J ARE TYPICALLY USED WHERE GUARD RAILING IS RECOMMENDED TO SHIELD EMBAMKMENT SLOPES AND A CRASHWORTHY END TREATMENT IS REQUIRED FOR BOTH DIRECTIONS OF TRAFFIC.

   IN-LINE TERMINAL SYSTEM END TREATMENTS ARE USED WHERE SITE CONDITIONS
6. WILL NOT ACCOMMODATE A FLARED END TREATMENT.
7. THE TYPE OF TERMINAL SYSTEM END TREATMENT TO BE USED WILL BE SHOWN ON THE PROJECT PLANS.
8. DEPENDENT ON SITE CONDITIONS (EMBANKMENT HEIGHT AND SIDE SLOPE), CONSTRUCTION OF ADDITIONAL GUARD RAILING (LENGTH EQUAL TO MULTIPLES OF 12'-6" WITH 6'-3" POST SPACING) MAY BE ADVISABLE.
9. WHERE PLACEMENT OF DIKE IS REQUIRED WITH GUARD RAILING INSTALLATIONS, SEE SHEET C-9 FOR DIKE POSITIONING DETAILS.
10. THE 15:1 OR FLATTER FLARE USED WITH BURIED END ANCHORS IS BASED ON THE EDGE OF THE PAVED SHOULDER OR OFFSET LINE OF EDGE OF THE TRAVELED WAY. THE LENGTH OF GUARD RAILING WITHIN THE 15:1 OR FLATTER FLARE IS BASED ON SITE CONDITIONS AND SHOULD BE A LENGTH EQUAL TO MULTIPLES OF 12'-6".

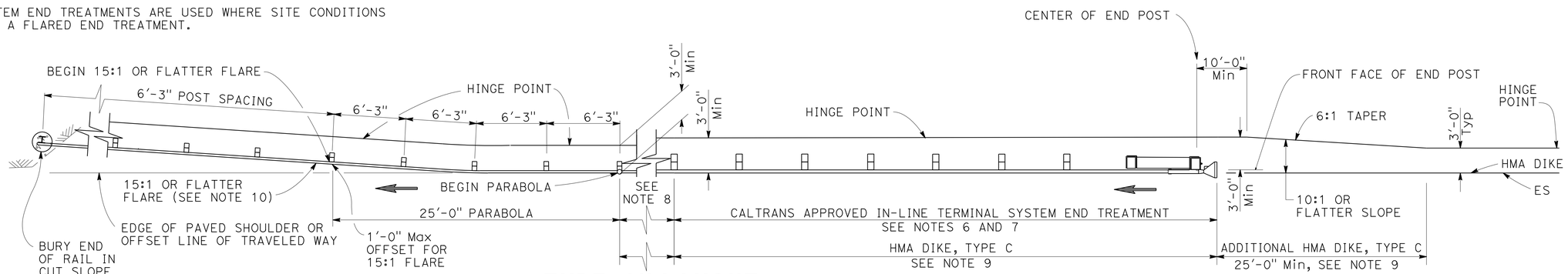

TYPE 11I LAYOUT

(EMBANKMENT GUARD RAILING INSTALLATION WITH IN-LINE END TREATMENT AND A BURIED END ANCHOR TREATMENT AT THE ENDS OF RAILING)
SEE NOTE 5

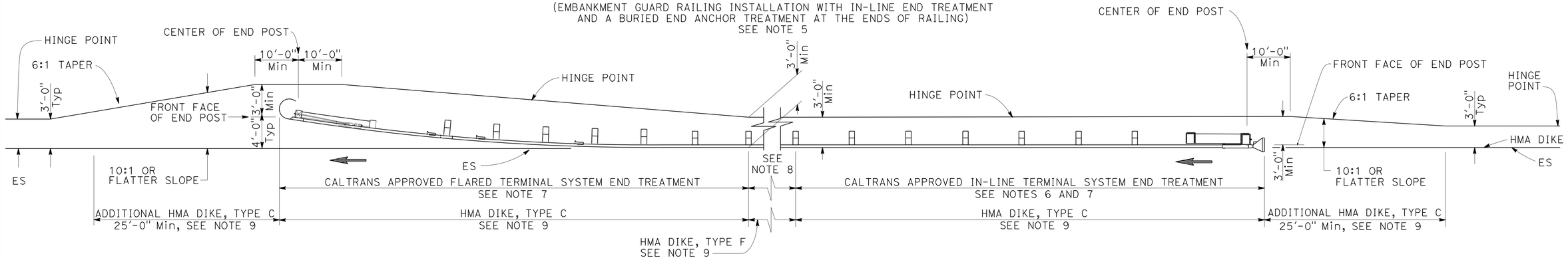

TYPE 11J LAYOUT

(EMBANKMENT GUARD RAILING INSTALLATION WITH IN-LINE END TREATMENT AND FLARED END TREATMENT AT THE ENDS OF RAILING)
SEE NOTE 5

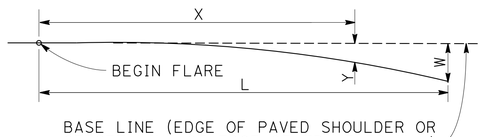

$$Y = \frac{WX^2}{L^2}$$

Y = OFFSET FROM BASE LINE
W = MAXIMUM OFFSET
X = DISTANCE ALONG BASE LINE
L = LENGTH OF FLARE

PARABOLIC FLARE OFFSETS

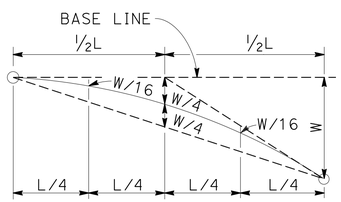

TYPICAL PARABOLIC LAYOUT

CONSTRUCTION DETAILS
METAL BEAM GUARD RAILING
TYPICAL LAYOUTS FOR EMBANKMENTS

NO SCALE

C-11

REVISED BY	DATE REVISED

CALCULATED-DESIGNED BY
CHECKED BY
FUNCTIONAL SUPERVISOR: CARLOS A. PORTILLO
FERMIN BARRIGA
MAHBOOBEH DEILAMI

STATE OF CALIFORNIA - DEPARTMENT OF TRANSPORTATION
Caltrans®
NORTH REGION
DIVISION OF ENGINEERING

LAST REVISION 04-09-14 | DATE PLOTTED => 18-MAR-2015 | TIME PLOTTED => 15:08

BORDER LAST REVISED 7/2/2010 | USERNAME => s130875 | DGN FILE => 0300000224ga011.dgn | RELATIVE BORDER SCALE IS IN INCHES 0 1 2 3 | UNIT 0305 | PROJECT NUMBER & PHASE 03000002241

Dist	COUNTY	ROUTE	POST MILES TOTAL PROJECT	SHEET No.	TOTAL SHEETS
03	ED	89	13.8/18.0	31	164

Fermin Barriga B. 6-9-14
REGISTERED CIVIL ENGINEER DATE

6-16-14
PLANS APPROVAL DATE

REGISTERED PROFESSIONAL ENGINEER
FERMIN BARRIGA
No. C47047
Exp. 12-31-15
CIVIL
STATE OF CALIFORNIA

THE STATE OF CALIFORNIA OR ITS OFFICERS OR AGENTS SHALL NOT BE RESPONSIBLE FOR THE ACCURACY OR COMPLETENESS OF SCANNED COPIES OF THIS PLAN SHEET.

NOTES:

1. LINE POST, BLOCKS AND HARDWARE TO BE USED ARE SHOWN ON SHEETS C-3, C-4, C-5, C-6, AND C-7.
2. GUARD RAIL POST SPACING TO BE 6'-3" CENTER TO CENTER, EXCEPT AS OTHERWISE NOTED.
3. EXCEPT AS NOTED, LINE POSTS ARE 6" X 8" X 6'-0" WOOD WITH 6" X 8" X 1'-2" WOOD BLOCKS. W6 X 9 STEEL POSTS, 6'-0" IN LENGTH, WITH 6" X 8" X 1'-2" NOTCHED WOOD BLOCKS OR PLASTIC BLOCKS MAY BE USED FOR 6" X 8" X 6'-0" WOOD POSTS WITH 6" X 8" X 1'-2" WOOD BLOCKS WHERE APPLICABLE AND WHEN SPECIFIED.
4. DIRECTION OF ADJACENT TRAFFIC INDICATED BY ⟶ .
5. FOR TRANSITION RAILING (TYPE WB) DETAILS FOR TYPES 12A AND 12B LAYOUTS, SEE SHEET C-16.
6. IN-LINE TERMINAL SYSTEM END TREATMENTS ARE USED WHERE SITE CONDITIONS WILL NOT ACCOMMODATE A FLARED END TREATMENT.
7. THE TYPE OF TERMINAL SYSTEM END TREATMENT TO BE USED WILL BE SHOWN ON THE PROJECT PLANS.
8. DEPENDENT ON SITE CONDITIONS (EMBANKMENT HEIGHT, SIDE SLOPES, OR OTHER FIXED OBJECTS), IT MAY BE ADVISABLE TO CONSTRUCT ADDITIONAL GUARD RAILING (A LENGTH EQUAL TO MULTIPLES OF 12'-6" WITH 6'-3" POST SPACING) BETWEEN THE TRANSITION RAILING AND END TREATMENT.
9. WHERE PLACEMENT OF DIKE IS REQUIRED WITH GUARD RAILING INSTALLATIONS, SEE SHEET C-9 FOR DIKE POSITIONING DETAILS.
10. TYPE 12A OR TYPE 12B LAYOUTS ARE TYPICALLY USED:
    - A. TO THE RIGHT OF APPROACHING TRAFFIC, AT THE END OF A STRUCTURE, ON TWO-LANE CONVENTIONAL HIGHWAY WHERE THE ROADBED WIDTH ACROSS THE STRUCTURE IS LESS THAN 40 FEET.
    - B. TO THE LEFT OF APPROACHING TRAFFIC, AT THE END OF A STRUCTURE, ON TWO-LANE CONVENTIONAL HIGHWAY WHERE THE ROADBED WIDTH ACROSS THE STRUCTURE IS LESS THAN 40 FEET.
    - C. TO THE RIGHT OF APPROACHING TRAFFIC AT THE END OF EACH STRUCTURE ON MULTILANE FREEWAYS OR EXPRESSWAYS WITH SEPARATE ADJACENT OR PARALLEL BRIDGES.
    - D. TO THE RIGHT OF APPROACHING TRAFFIC AT THE END OF THE STRUCTURE ON MULTILANE FREEWAYS OR EXPRESSWAYS WITH DECKED MEDIAN ON THE BRIDGE.
11. FOR ADDITIONAL DETAILS OF TYPICAL CONNECTIONS TO BRIDGE RAIL, SEE CONNECTION DETAIL AA ON SHEET C-14 AND C-15.

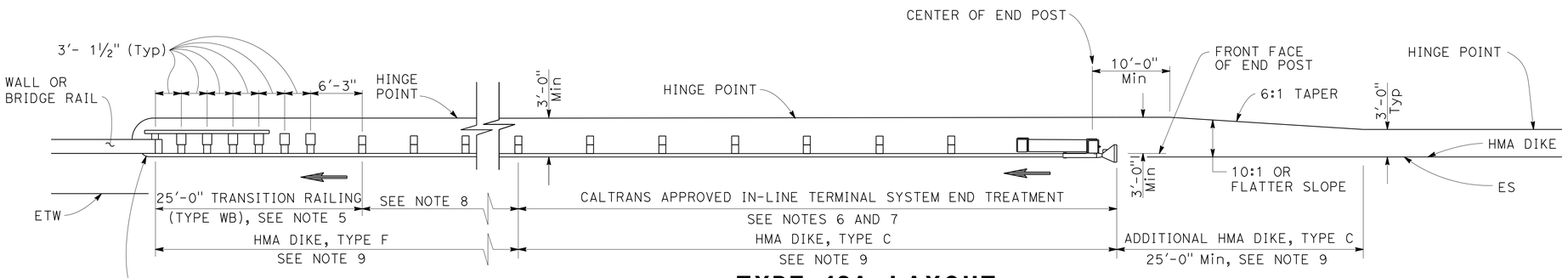

TYPE 12A LAYOUT

(GUARD RAILING INSTALLATION AT STRUCTURE APPROACH WITH AN IN-LINE END TREATMENT AT TRAFFIC APPROACH END OF RAILING)
SEE NOTES 10

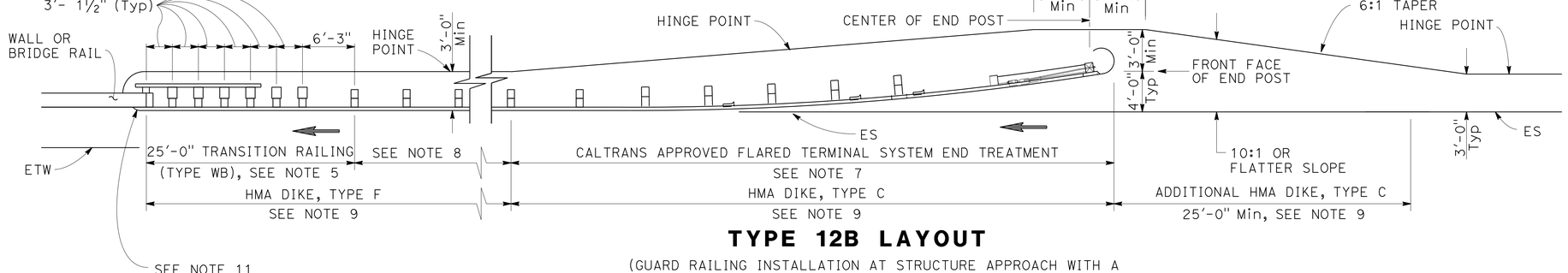

TYPE 12B LAYOUT

(GUARD RAILING INSTALLATION AT STRUCTURE APPROACH WITH A FLARED END TREATMENT AT TRAFFIC APPROACH END OF RAILING)
SEE NOTES 10

CONSTRUCTION DETAILS

METAL BEAM GUARD RAILING TYPICAL LAYOUTS FOR STRUCTURE APPROACH

NO SCALE

C-12

REVISED BY | DATE REVISED
FERMIN BARRIGA | MAHBOOBEH DEILAMI
CALCULATED-DESIGNED BY | CHECKED BY
FUNCTIONAL SUPERVISOR: CARLOS A. PORTILLO
STATE OF CALIFORNIA - DEPARTMENT OF TRANSPORTATION
NORTH REGION DIVISION OF ENGINEERING
Caltrans®

LAST REVISION: DATE PLOTTED => 18-MAR-2015 | 02-26-14 | TIME PLOTTED => 15:08

BORDER LAST REVISED 7/2/2010 | USERNAME => s130875 | DGN FILE => 0300000224ga012.dgn | RELATIVE BORDER SCALE IS IN INCHES 0 1 2 3 | UNIT 0305 | PROJECT NUMBER & PHASE 03000002241

Dist	COUNTY	ROUTE	POST MILES TOTAL PROJECT	SHEET No.	TOTAL SHEETS
03	ED	89	13.8/18.0	32	164

Fermin Barriga 6-9-14
REGISTERED CIVIL ENGINEER DATE

6-16-14
PLANS APPROVAL DATE

REGISTERED PROFESSIONAL ENGINEER
FERMIN BARRIGA
No. C47047
Exp. 12-31-15
CIVIL
STATE OF CALIFORNIA

THE STATE OF CALIFORNIA OR ITS OFFICERS OR AGENTS SHALL NOT BE RESPONSIBLE FOR THE ACCURACY OR COMPLETENESS OF SCANNED COPIES OF THIS PLAN SHEET.

NOTES:

1. LINE POST, BLOCKS AND HARDWARE TO BE USED ARE SHOWN ON SHEETS C-3, C-4, C-5, C-6, AND C-7.
2. GUARD RAIL POST SPACING TO BE 6'-3" CENTER TO CENTER, EXCEPT AS OTHERWISE NOTED.
3. EXCEPT AS NOTED, LINE POSTS ARE 6" X 8" X 6'-0" WOOD WITH 6" X 8" X 1'-2" WOOD BLOCKS. W6 X 9 STEEL POSTS, 6'-0" IN LENGTH, WITH 6" X 8" X 1-2" NOTCHED WOOD BLOCKS OR NOTCHED RECYCLED PLASTIC BLOCKS MAY BE USED FOR 6" X 8" X 6'-0" WOOD POSTS WITH 6" X 8" X 1'-2" WOOD BLOCKS WHERE APPLICABLE AND WHEN SPECIFIED.
4. DIRECTION OF ADJACENT TRAFFIC INDICATED BY ⟶.
5. FOR TRANSITION RAILING (TYPE WB) DETAILS FOR TYPES 12AA AND 12BB LAYOUTS, SEE SHEET C-16.
6. IN-LINE TERMINAL SYSTEM TREATMENTS ARE USED WHERE SITE CONDITIONS WILL NOT ACCOMMODATE A FLARED END TREATMENT.
7. THE TYPE OF TERMINAL SYSTEM TO BE USED WILL BE SHOWN ON THE PROJECT PLANS.
8. DEPENDENT ON SITE CONDITIONS (EMBANKMENT HEIGHT, SIDE SLOPES, OTHER FIXED OBJECTS), IT MAY BE ADVISABLE TO CONSTRUCT ADDITIONAL GUARD RAILING (A LENGTH EQUAL TO MULTIPLES OF 12'-6" WITH 6'-3" POST SPACING) BETWEEN THE TRANSITION RAILING AND END TREATMENTS.
9. WHERE PLACEMENT OF DIKE IS REQUIRED WITH GUARD RAILING INSTALLATIONS, SEE SHEET C-9 FOR DIKE POSITIONING DETAILS.
10. TYPE 12AA OR TYPE 12BB LAYOUTS ARE TYPICALLY USED TO THE RIGHT OF TRAFFIC DEPARTING A STRUCTURE ON TWO-WAY CONVENTIONAL HIGHWAYS WHERE THE ROADBED WIDTH ACROSS THE STRUCTURE IS LESS THAN 40 FEET.
11. FOR ADDITIONAL DETAILS OF TYPICAL CONNECTIONS TO BRIDGE RAIL, SEE CONNECTION DETAIL CC ON SHEET C-15.

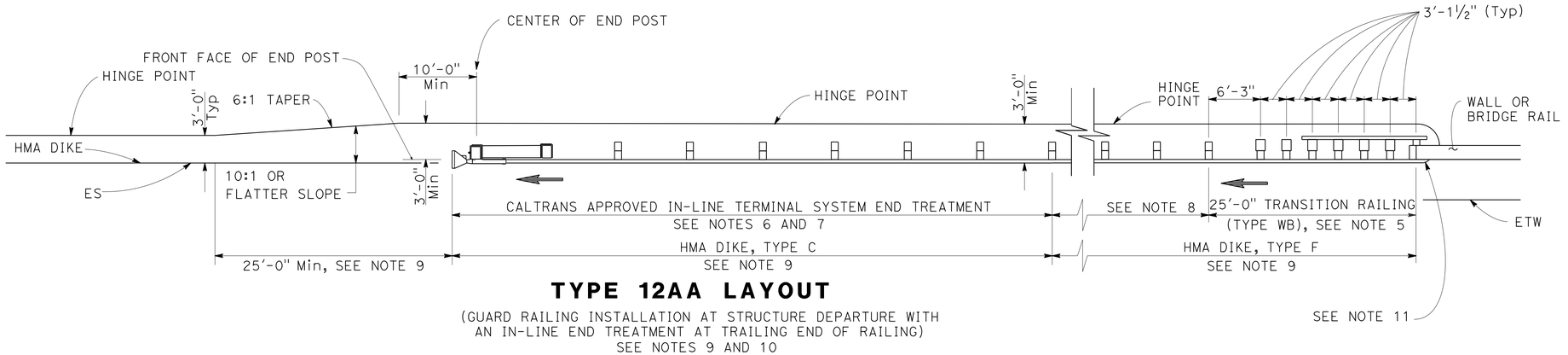

TYPE 12AA LAYOUT

(GUARD RAILING INSTALLATION AT STRUCTURE DEPARTURE WITH AN IN-LINE END TREATMENT AT TRAILING END OF RAILING)
SEE NOTES 9 AND 10

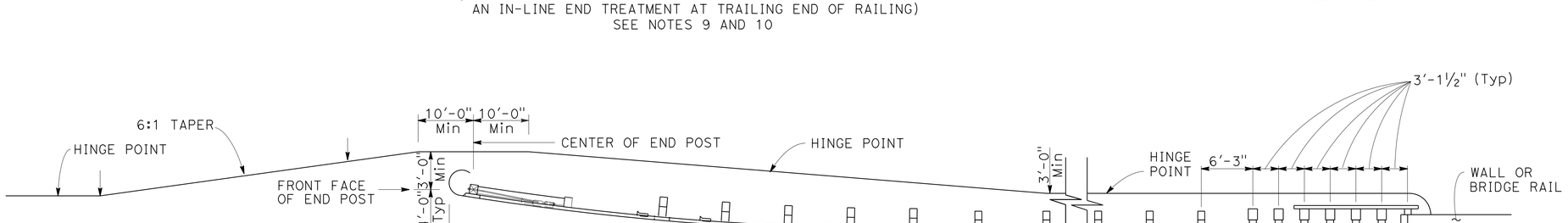

TYPE 12BB LAYOUT

(GUARD RAILING INSTALLATION AT STRUCTURE DEPARTURE WITH A FLARED END TREATMENT AT TRAILING END OF RAILING)
SEE NOTES 9 AND 10

CONSTRUCTION DETAILS
METAL BEAM GUARD RAILING
TYPICAL LAYOUTS FOR STRUCTURE DEPARTURE

NO SCALE

C-13

REVISED BY | DATE REVISED
FERMIN BARRIGA | MAHBOOBEH DEILAMI
CALCULATED-DESIGNED BY | CHECKED BY
FUNCTIONAL SUPERVISOR: CARLOS A. PORTILLO
STATE OF CALIFORNIA - DEPARTMENT OF TRANSPORTATION
Caltrans®
NORTH REGION
DIVISION OF ENGINEERING

LAST REVISION 02-26-14 | DATE PLOTTED => 18-MAR-2015 | TIME PLOTTED => 15:08

BORDER LAST REVISED 7/2/2010 | USERNAME => s130875 | DGN FILE => 0300000224ga013.dgn | RELATIVE BORDER SCALE IS IN INCHES 0 1 2 3 | UNIT 0305 | PROJECT NUMBER & PHASE 03000002241

Dist	COUNTY	ROUTE	POST MILES TOTAL PROJECT	SHEET No.	TOTAL SHEETS
03	ED	89	13.8/18.0	33	164

Fermin Barriga 6-9-14
REGISTERED CIVIL ENGINEER DATE

FERMIN BARRIGA No. C47047 Exp. 12-31-15 CIVIL
REGISTERED PROFESSIONAL ENGINEER — STATE OF CALIFORNIA

6-16-14
PLANS APPROVAL DATE

THE STATE OF CALIFORNIA OR ITS OFFICERS OR AGENTS SHALL NOT BE RESPONSIBLE FOR THE ACCURACY OR COMPLETENESS OF SCANNED COPIES OF THIS PLAN SHEET.

NOTES:

1. SEE SHEET C-15 FOR ADDITIONAL CONNECTION DETAILS TO BRIDGES WITHOUT SIDEWALKS.
2. ADDITIONAL DETAILS OF POSTS, BLOCKS AND HARDWARE ARE SHOWN ON SHEET C-5, C-6, AND C-7.
3. DIRECTION OF ADJACENT TRAFFIC INDICATED BY ➡.
4. FOR ADDITIONAL DETAILS OF TRANSITION RAILING (TYPE WB), SEE SHEET C-16. TRANSITION RAILING (TYPE WB) TRANSITIONS THE 12 GAUGE W-BEAM STANDARD RAILING SECTION OF GUARD RAILING TO A HEAVIER GAGE NESTED THRIE BEAM RAILING SECTION WHICH IS CONNECTED TO THE CONCRETE BRIDGE RAILING.
5. FOR TYPICAL USE OF CONNECTION DETAIL AA, SEE LAYOUT TYPES 12A AND 12B ON SHEET C-12.
6. WHERE THE HEIGHT OF THE BRIDGE RAILING EXCEEDS THE HEIGHT OF THE THRIE BEAM RAILING BY MORE THAN 1" AT CONNECTION DETAIL AA, TAPER THE TOP OF THE END OF THE BRIDGE RAILING AT 4:1 TO MATCH THE TOP ELEVATION OF THE THRIE BEAM RAIL.
7. FOR DETAILS OF END CAP (TYPE TC), SEE SHEET C-16.
8. SEE SHEET C-16 FOR ADDITIONAL DETAILS REGARDING DEPTH DIMENSION FOR STRAIGHT METAL BOX SPACER.

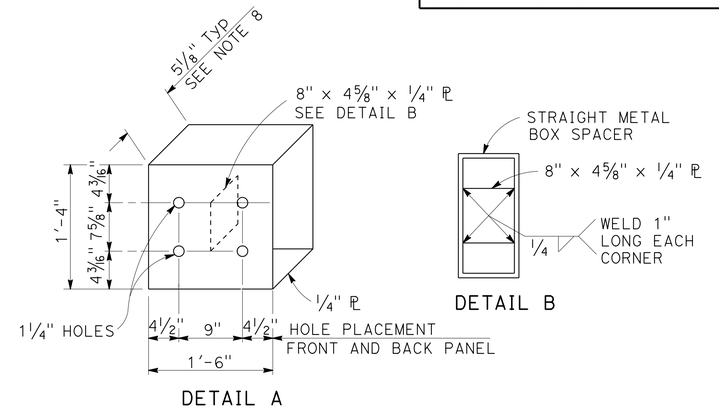

STRAIGHT METAL BOX SPACER

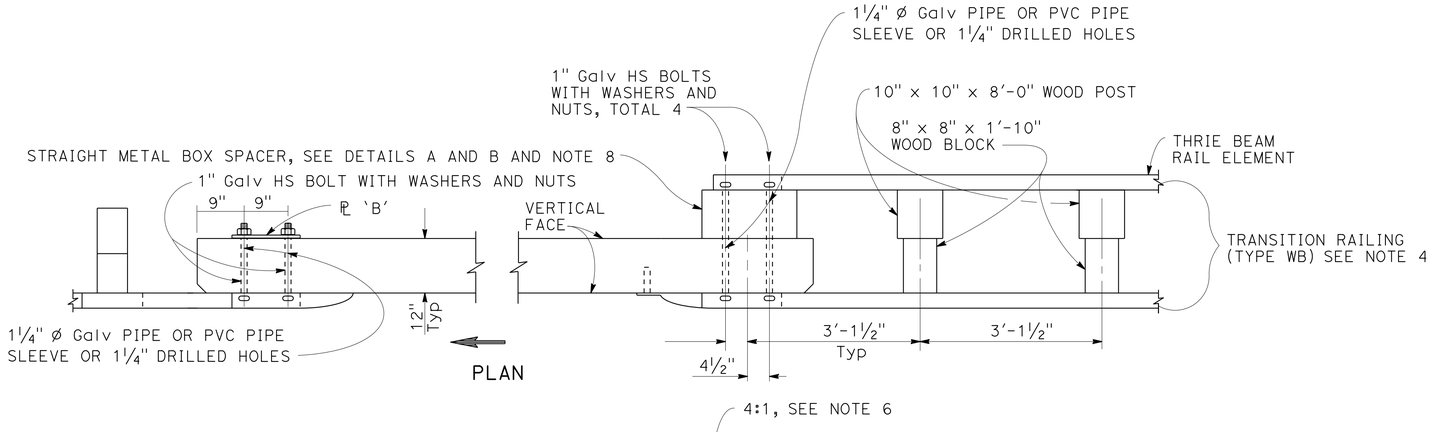

GUARD RAILING CONNECTION TO BRIDGE RAILING WITHOUT SIDEWALK

ELEVATION

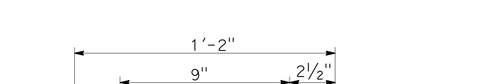

PLATE 'A'

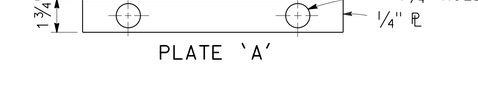

PLATE 'B'

(FOR BACKSIDE OF CONNECTION BB)

CONSTRUCTION DETAILS
METAL BEAM GUARD RAILING
CONNECTIONS TO BRIDGE RAILINGS WITHOUT SIDEWALKS
DETAILS No. 1

NO SCALE

C-14

STATE OF CALIFORNIA - DEPARTMENT OF TRANSPORTATION
NORTH REGION
DIVISION OF ENGINEERING
Caltrans

FUNCTIONAL SUPERVISOR: CARLOS A. PORTILLO
CALCULATED-DESIGNED BY: FERMIN BARRIGA
CHECKED BY: MAHBOOBEH DEILAMI

REVISED BY	DATE REVISED

LAST REVISION | DATE PLOTTED => 18-MAR-2015
02-26-14 | TIME PLOTTED => 15:08

BORDER LAST REVISED 7/2/2010
USERNAME => s130875
DGN FILE => 0300000224ga014.dgn
RELATIVE BORDER SCALE IS IN INCHES 0 1 2 3
UNIT 0305
PROJECT NUMBER & PHASE 03000002241

Dist	COUNTY	ROUTE	POST MILES TOTAL PROJECT	SHEET No.	TOTAL SHEETS
03	ED	89	13.8/18.0	34	164

Fermin Barriga 6-9-14
REGISTERED CIVIL ENGINEER DATE

6-16-14
PLANS APPROVAL DATE

FERMIN BARRIGA No. C47047 Exp. 12-31-15 CIVIL — REGISTERED PROFESSIONAL ENGINEER — STATE OF CALIFORNIA

THE STATE OF CALIFORNIA OR ITS OFFICERS OR AGENTS SHALL NOT BE RESPONSIBLE FOR THE ACCURACY OR COMPLETENESS OF SCANNED COPIES OF THIS PLAN SHEET.

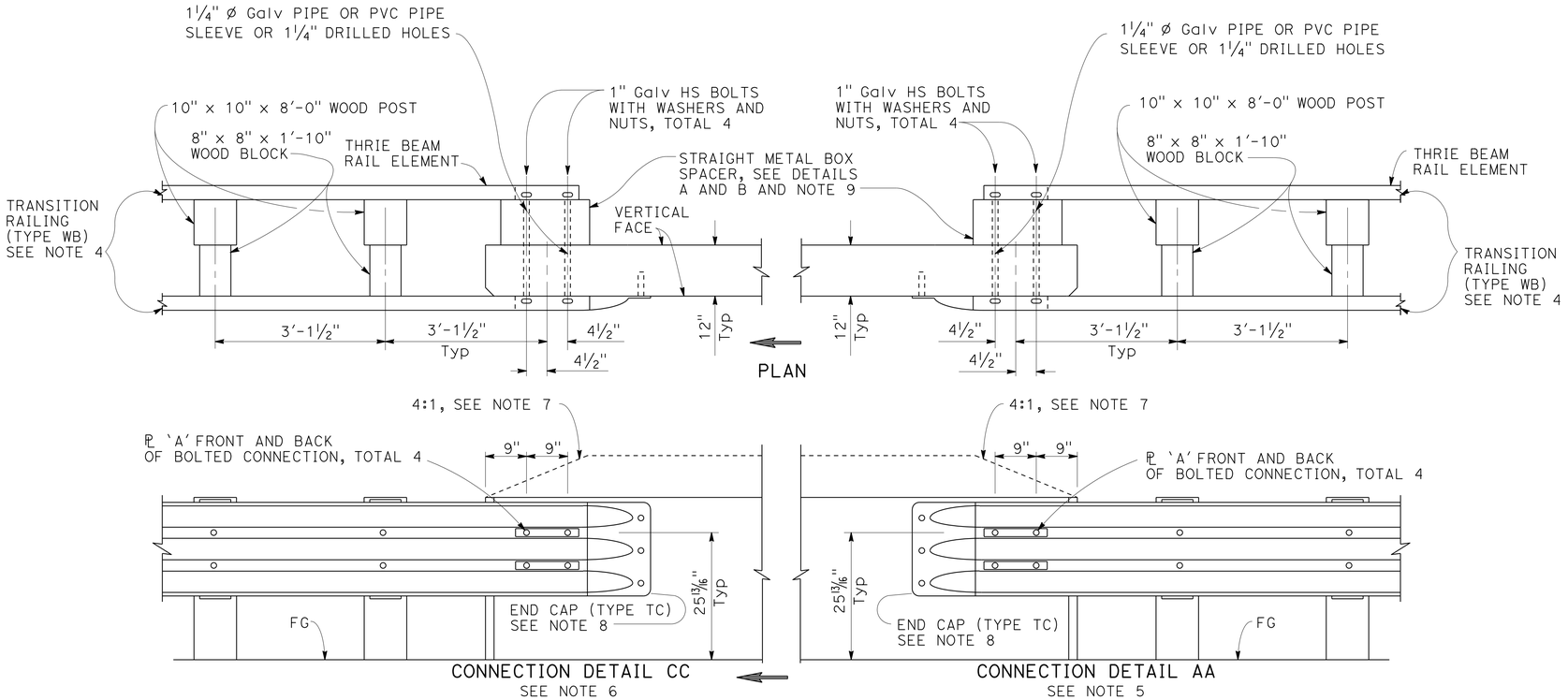

GUARD RAILING CONNECTION TO BRIDGE RAILING WITHOUT SIDEWALK

ELEVATION

NOTES:

1. SEE SHEET C-14 FOR ADDITIONAL CONNECTION DETAILS TO BRIDGES WITHOUT SIDEWALKS.
2. ADDITIONAL DETAILS OF POSTS, BLOCKS AND HARDWARE ARE SHOWN ON SHEET C-5, C-6, AND C-7.
3. DIRECTION OF ADJACENT TRAFFIC INDICATED BY ➡.
4. FOR ADDITIONAL DETAILS OF TRANSITION RAILING (TYPE WB), SEE SHEET C-14. TRANSITION RAILING (TYPE WB) TRANSITIONS THE 12 GAUGE W-BEAM STANDARD RAILING SECTION OF GUARD RAILING TO A HEAVIER GAGE NESTED THRIE BEAM RAILING SECTION WHICH IS CONNECTED TO THE CONCRETE BRIDGE RAILING.
5. FOR TYPICAL USE OF CONNECTION DETAIL AA, SEE LAYOUT TYPES 12A AND 12B ON SHEET C-12.
6. FOR TYPICAL USE OF CONNECTION DETAIL CC, SEE LAYOUT TYPES 12AA AND 12BB ON SHEET C-13.
7. WHERE THE HEIGHT OF THE BRIDGE RAILING EXCEEDS THE HEIGHT OF THE THRIE BEAM RAILING BY MORE THAN 1" AT CONNECTION DETAIL AA AND CONNECTION DETAIL CC, TAPER THE TOP OF THE END OF THE BRIDGE RAILING AT 4:1 TO MATCH THE TOP ELEVATION OF THE THRIE BEAM RAILING.
8. FOR DETAILS OF END CAP (TYPE TC), SEE SHEET C-14.
9. SEE SHEET C-14 FOR ADDITIONAL DETAILS REGARDING DEPTH DIMENSION FOR STRAIGHT METAL BOX SPACER.

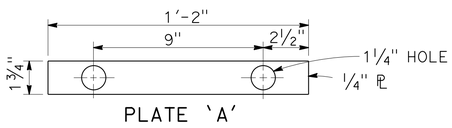

PLATE 'A'

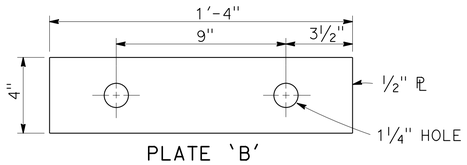

PLATE 'B'

(FOR BACKSIDE OF CONNECTION BB)

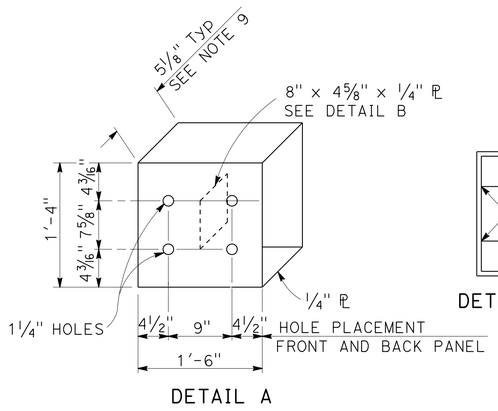

DETAIL A

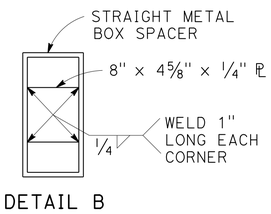

DETAIL B

STRAIGHT METAL BOX SPACER

CONSTRUCTION DETAILS

METAL BEAM GUARD RAILING CONNECTIONS TO BRIDGE RAILINGS WITHOUT SIDEWALKS DETAILS No. 2

NO SCALE

C-15

REVISED BY | DATE REVISED
FERMIN BARRIGA | MAHBOOBEH DEILAMI
CALCULATED-DESIGNED BY | CHECKED BY
FUNCTIONAL SUPERVISOR: CARLOS A. PORTILLO

STATE OF CALIFORNIA - DEPARTMENT OF TRANSPORTATION
Caltrans®
NORTH REGION
DIVISION OF ENGINEERING

LAST REVISION: DATE PLOTTED => 18-MAR-2015
02-26-14 TIME PLOTTED => 15:08

BORDER LAST REVISED 7/2/2010 | USERNAME => s130875 | DGN FILE => 0300000224ga015.dgn | RELATIVE BORDER SCALE IS IN INCHES 0 1 2 3 | UNIT 0305 | PROJECT NUMBER & PHASE 03000002241

Dist	COUNTY	ROUTE	POST MILES TOTAL PROJECT	SHEET No.	TOTAL SHEETS
03	ED	89	13.8/18.0	35	164

Fermin Barriga 6-9-14
REGISTERED CIVIL ENGINEER DATE

FERMIN BARRIGA No. C47047 Exp. 12-31-15 CIVIL — REGISTERED PROFESSIONAL ENGINEER — STATE OF CALIFORNIA

6-16-14
PLANS APPROVAL DATE

THE STATE OF CALIFORNIA OR ITS OFFICERS OR AGENTS SHALL NOT BE RESPONSIBLE FOR THE ACCURACY OR COMPLETENESS OF SCANNED COPIES OF THIS PLAN SHEET.

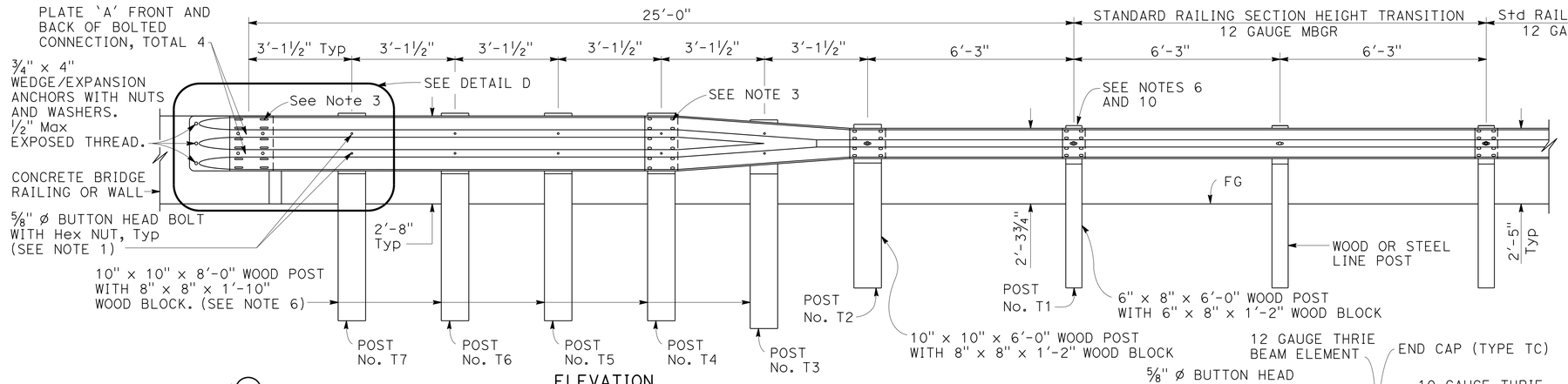

ELEVATION

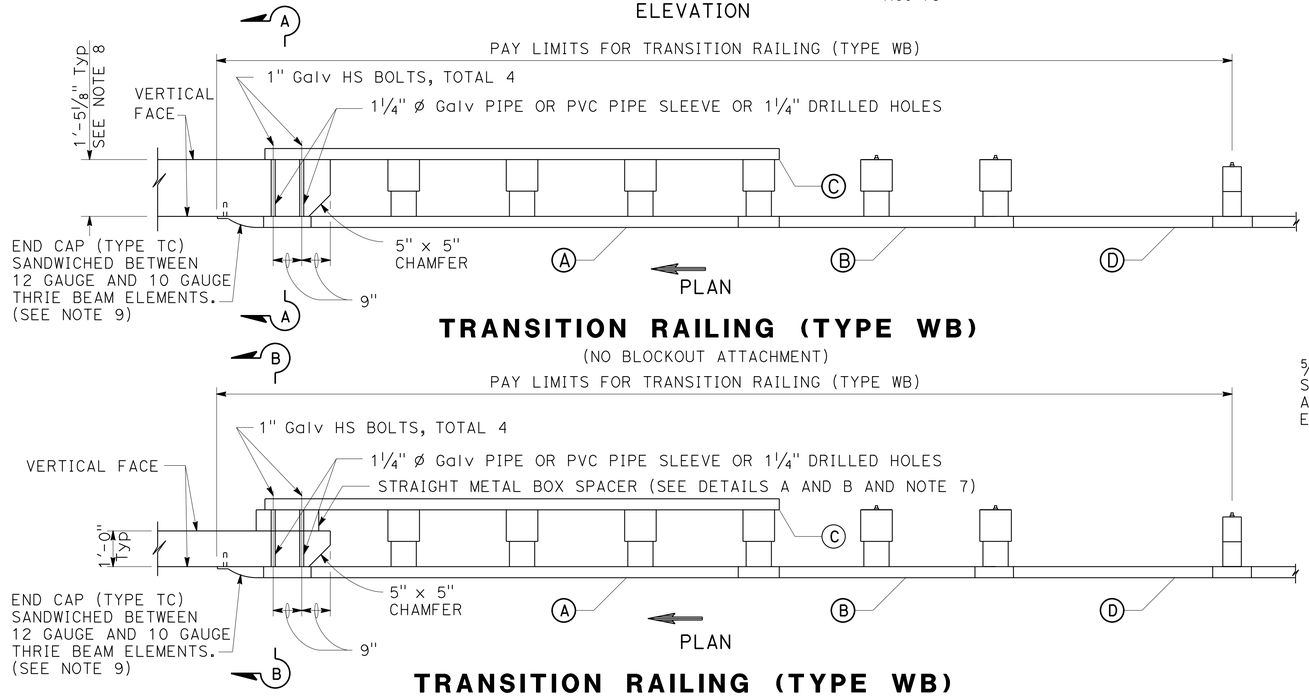

TRANSITION RAILING (TYPE WB)

(NO BLOCKOUT ATTACHMENT)

TRANSITION RAILING (TYPE WB)

(BLOCKOUT ATTACHMENT)

LEGEND

- Ⓐ NESTED THRIE BEAM ELEMENTS (ONE 12 GAUGE ELEMENT NESTED OVER ONE 10 GAUGE ELEMENT).
- Ⓑ ONE 10 GAUGE "W" BEAM TO THRIE BEAM ELEMENT.
- Ⓒ ONE 12 GAUGE THRIE BEAM ELEMENT.
- Ⓓ ONE 10 GAUGE "W" BEAM RAIL ELEMENT (7'-3½" LENGTH)

10 GAUGE = 0.135" THICK

12 GAUGE = 0.108" THICK

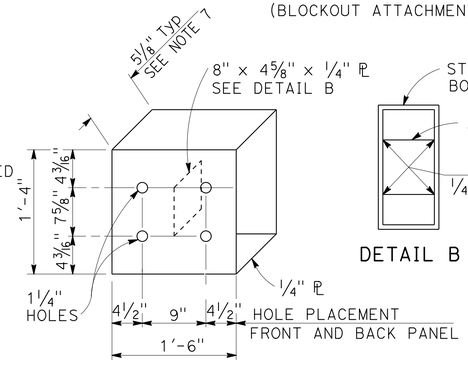

DETAIL A

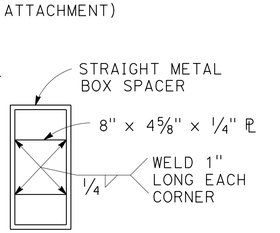

DETAIL B

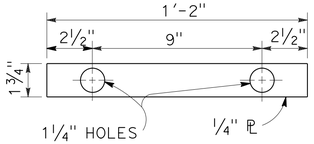

DETAIL C

STRAIGHT METAL BOX SPACER

PLATE 'A'

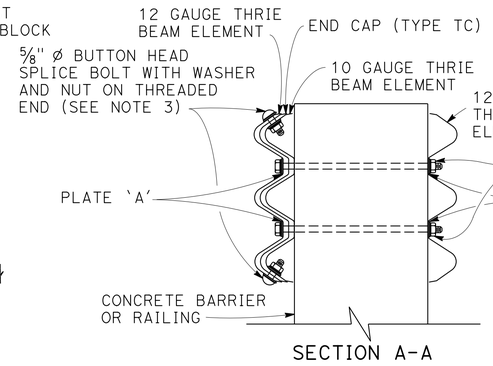

SECTION A-A

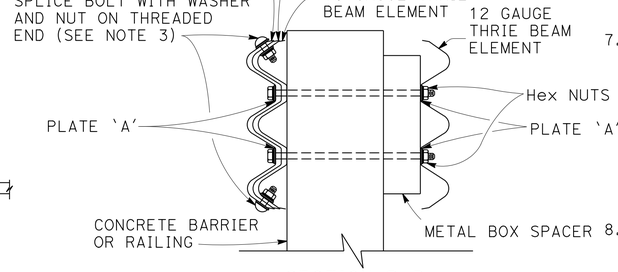

SECTION B-B

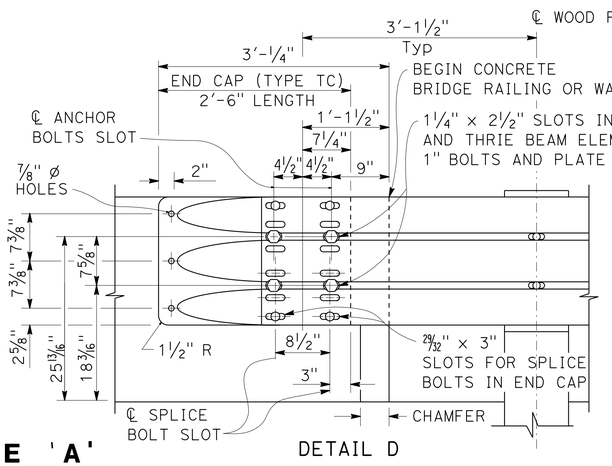

DETAIL D

NOTES:

1. USE ⅝" ⁎ BUTTON HEAD BOLTS AND HEX NUTS FOR CONNECTIONS TO POSTS. NO WASHER ON RAIL FACE FOR BOLTED CONNECTIONS TO POST.
2. THE NESTED RAIL ELEMENTS, END CAP, AND 'W' BEAM TO THRIE BEAM ELEMENT MAY BE SPLICED TOGETHER PRIOR TO BOLTING THE ELEMENTS TO THE WOOD POST AND CONCRETE BARRIER OR RAILING.
3. EXTERIOR SPLICE BOLT HOLES FOR RAIL ELEMENT SPLICES AT POST NO. T4 AND THE CONNECTION TO THE CONCRETE BARRIER OR RAILING SHALL BE THE STANDARD 13/16" X 1 1/8" SLOT SIZE. INTERIOR SPLICE BOLT HOLES AT THESE LOCATIONS MAY BE INCREASED UP TO 1 1/4" ⁎. ONLY THE TOP 2 AND THE BOTTOM 2 SPLICE BOLTS WITH WASHERS AND NUTS ARE REQUIRED FOR RAIL SPLICES AT POST NO. T4 AND THE CONNECTION TO THE CONCRETE BARRIER OR RAILING.
4. ADJACENT TRAFFIC INDICATED BY ➡ .
5. THE TOP ELEVATION OF POSTS NO. T2 THROUGH NO. T7 SHALL NOT PROJECT MORE THAN 1" ABOVE THE TOP ELEVATION OF THE RAIL ELEMENT.
6. TYPICALLY, THE RAILING CONNECTED TO TRANS RAILING (TYPE WB) WILL BE EITHER STD RAILING SECTION OF MBGR WITH HEIGHT TRANSITION RATIO OF 120:1 OR AN APPROVED CALTRANS END TREATMENT ATTACHED TO POST NO. T1.
7. THE DEPTH OF THE METAL BOX SPACER VARIES FROM THE 5 1/8" TO 1 1/2" AND IS DEPENDENT ON THE WIDTH OF THE CONCRETE RAILING OR WALL. THE COMBINED DIMENSION FOR THE DEPTH OF THE METAL BOX SPACER PLUS THE WIDTH OF RAILING OR WALL IS TYPICALLY 17 1/8". WHERE THE SPACE BETWEEN THE BACKSIDE OF THE CONCRETE RAILING OR WALL AND THE REAR THRIE BEAM ELEMENT IS LESS THAN 1 1/2", METAL PLATES SIMILAR TO PLATE 'A' ARE TO BE USED AS SPACERS.
8. WHERE THE WIDTH OF THE CONCRETE RAILING OR WALL IS GREATER THAN 17 1/8", WOOD BLOCKS ARE TO BE USED TO FILL THE SPACE CREATED BETWEEN THE BACKSIDE OF POSTS NO. T4 THROUGH NO. T7 AND THE REAR THRIE BEAM ELEMENT. THESE WOOD BLOCKS SHALL BE 8" IN WIDTH AND 1'-2" LONG. THE DIMENSION BETWEEN THE FRONT AND BACK THRIE BEAM ELEMENTS IS TO MATCH THE WIDTH OF THE CONCRETE RAILING OR WALL.
9. END CAP MAY BE INSTALLED OVER 12 GAUGE AND 10 GAUGE THRIE BEAM ELEMENTS WHERE TRANSITION RAILING IS INSTALLED ON THE DEPARTURE END OF BRIDGE RAILING.
10. CONFORM STANDARD RAILING SECTION HEIGHT TO 2'-3 3/4" AT POST NO. T1 USING HEIGHT TRANSITION RATIO OF 120:1.

CONSTRUCTION DETAILS
METAL BEAM GUARD RAILING
TRANSITION RAILING
(TYPE WB)

NO SCALE

C-16

REVISED BY | DATE REVISED
FERMIN BARRIGA | MAHBOOBEH DEILAMI
CALCULATED-DESIGNED BY | CHECKED BY
FUNCTIONAL SUPERVISOR: CARLOS A. PORTILLO
STATE OF CALIFORNIA - DEPARTMENT OF TRANSPORTATION
Caltrans®
NORTH REGION
DIVISION OF ENGINEERING

LAST REVISION | DATE PLOTTED => 18-MAR-2015
02-26-14 | TIME PLOTTED => 15:08

BORDER LAST REVISED 7/2/2010 | USERNAME => s130875 | DGN FILE => 0300000224ga016.dgn | RELATIVE BORDER SCALE IS IN INCHES 0 1 2 3 | UNIT 0305 | PROJECT NUMBER & PHASE 03000002241

Dist	COUNTY	ROUTE	POST MILES TOTAL PROJECT	SHEET No.	TOTAL SHEETS
03	ED	89	13.8/18.0	36	164

Fermin Barriga 6-9-14
REGISTERED CIVIL ENGINEER DATE

6-16-14
PLANS APPROVAL DATE

REGISTERED PROFESSIONAL ENGINEER
FERMIN BARRIGA
No. C47047
Exp. 12-31-15
CIVIL
STATE OF CALIFORNIA

THE STATE OF CALIFORNIA OR ITS OFFICERS OR AGENTS SHALL NOT BE RESPONSIBLE FOR THE ACCURACY OR COMPLETENESS OF SCANNED COPIES OF THIS PLAN SHEET.

NOTES:

1. WHERE THE DISTANCE BETWEEN BACK OF POST AND HINGE POINT IS LESS THAN 42", CONSTRUCT VEGETATION CONTROL TO THE HINGE POINT WHILE MAINTAINING THE 8" BLOCK-OUT AT BACK OF POST. IF THE 8" BLOCK-OUT AT BACK OF POST CAN NOT BE MAINTAINED, CONSTRUCT VEGETATION CONTROL FLUSH WITH THE BACK EDGE OF POST.
2. WHERE DIKE IS CONSTRUCTED UNDER RAILING, CONSTRUCT VEGETATION CONTROL TO BACK EDGE OF DIKE. WHERE PAVED SHOULDER IS CONSTRUCTED WITHIN 36" IN FRONT OF THE POST, CONSTRUCT VEGETATION CONTROL TO THE EDGE OF PAVED SHOULDER.
3. FOR WOOD POST SIZES, SEE SHEET C-6.
4. FOR STEEL POST SIZES, SEE SHEET C-7.
5. FOR DETAILS NOT SHOWN, SEE SHEETS C-3 AND C-4.

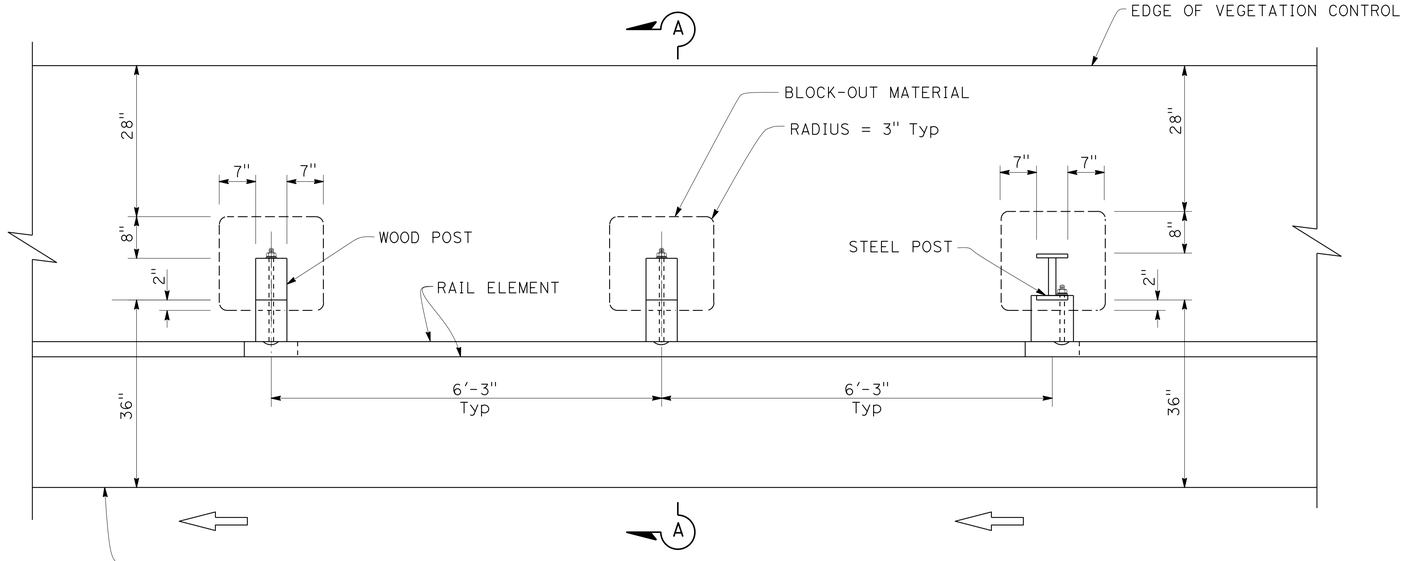

PLAN

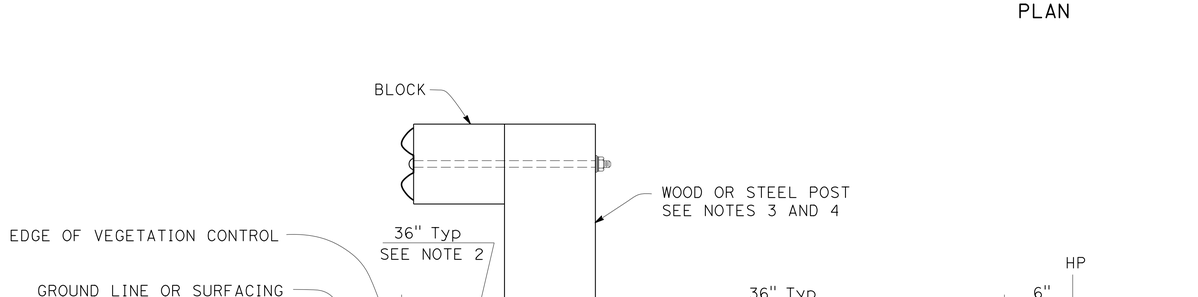

STA "A3" 322+00.00 TO STA "A3" 325+75.00
STA "A3" 335+21.60 TO STA "A3" 338+06.39

SECTION A-A

CONSTRUCTION DETAILS
METAL BEAM GUARD RAILING
TYPICAL VEGETATION CONTROL
STANDARD RAILING SECTION

NO SCALE

C-17

REVISED BY	DATE REVISED

CALCULATED-DESIGNED BY: FERMIN BARRIGA
CHECKED BY: MAHBOOBEH DEILAMI
FUNCTIONAL SUPERVISOR: CARLOS A. PORTILLO

STATE OF CALIFORNIA - DEPARTMENT OF TRANSPORTATION
NORTH REGION
DIVISION OF ENGINEERING
Caltrans®

LAST REVISION: 04-09-14
DATE PLOTTED => 16-MAR-2015
TIME PLOTTED => 15:08

Dist	COUNTY	ROUTE	POST MILES TOTAL PROJECT	SHEET No.	TOTAL SHEETS
03	ED	89	13.8/18.0	37	164

Fermin Barriga B. 6-9-14
REGISTERED CIVIL ENGINEER DATE

6-16-14
PLANS APPROVAL DATE

REGISTERED PROFESSIONAL ENGINEER
FERMIN BARRIGA
No. C47047
Exp. 12-31-15
CIVIL
STATE OF CALIFORNIA

THE STATE OF CALIFORNIA OR ITS OFFICERS OR AGENTS SHALL NOT BE RESPONSIBLE FOR THE ACCURACY OR COMPLETENESS OF SCANNED COPIES OF THIS PLAN SHEET.

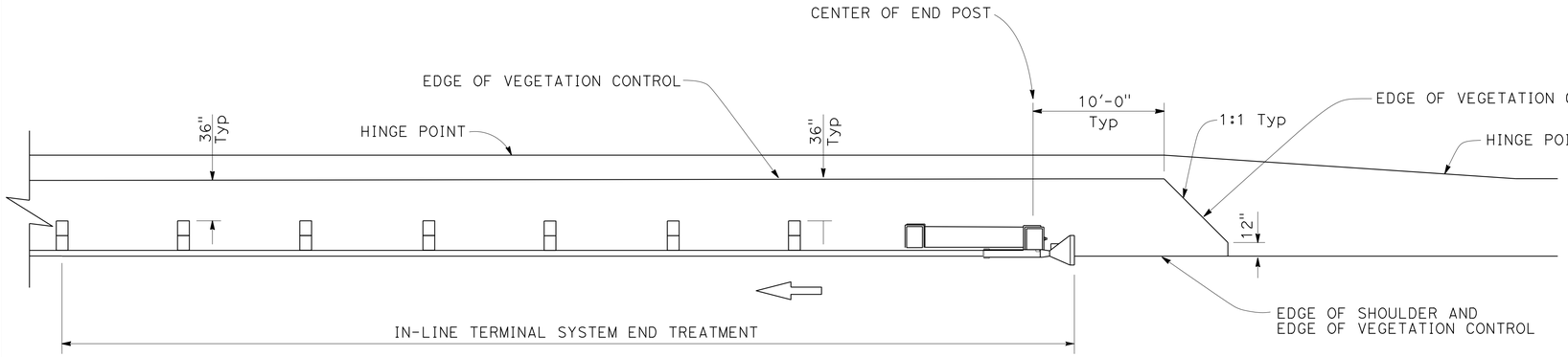

PLAN

NOTES:

1. SEE SHEET C-17 FOR ADDITIONAL VEGETATION CONTROL DETAILS.
2. WHERE THE DISTANCE BETWEEN BACK OF POST AND HINGE POINT IS LESS THAN 42", CONSTRUCT VEGETATION CONTROL TO THE HINGE POINT WHILE MAINTAINING THE 8" BLOCK-OUT AT BACK OF POST. IF THE 8" BLOCK-OUT AT BACK OF POST CAN NOT BE MAINTAINED, CONSTRUCT VEGETATION CONTROL FLUSH WITH THE BACK EDGE OF POST.
3. WHERE DIKE IS CONSTRUCTED UNDER RAILING, CONSTRUCT VEGETATION CONTROL TO BACK EDGE OF DIKE. WHERE PAVED SHOULDER IS CONSTRUCTED WITHIN 36" IN FRONT OF THE POST, CONSTRUCT VEGETATION CONTROL TO THE EDGE OF PAVED SHOULDER.

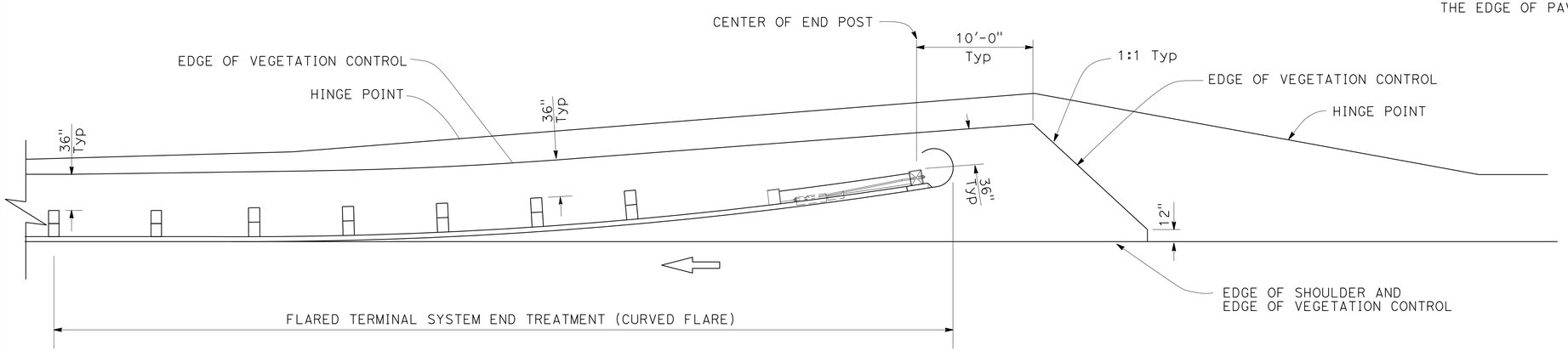

PLAN

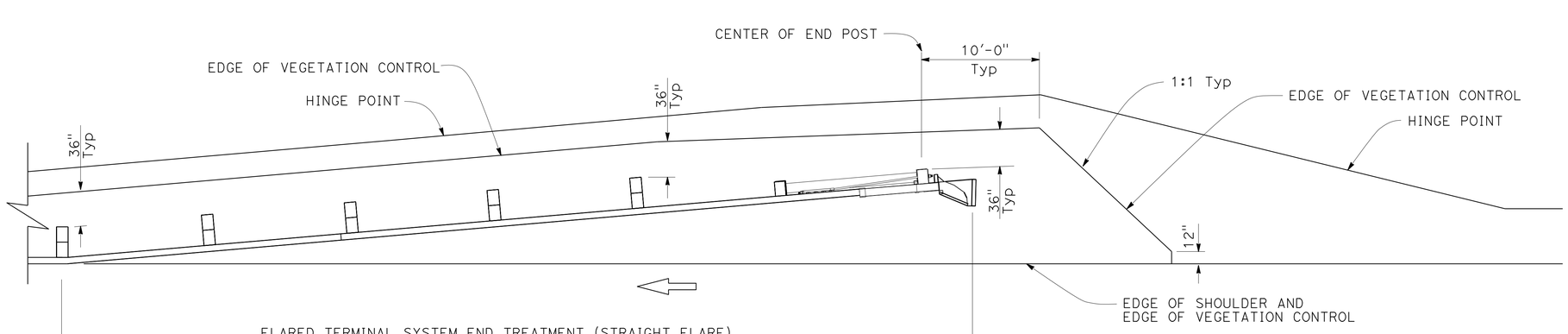

PLAN

CONSTRUCTION DETAILS
METAL BEAM GUARD RAILING
TYPICAL VEGETATION CONTROL
FOR TERMINAL SYSTEM END TREATMENTS

NO SCALE

C-18

REVISED BY | DATE REVISED
FERMIN BARRIGA | MAHBOOBEH DEILAMI
CALCULATED-DESIGNED BY | CHECKED BY
FUNCTIONAL SUPERVISOR: CARLOS A. PORTILLO

STATE OF CALIFORNIA - DEPARTMENT OF TRANSPORTATION
Caltrans®
NORTH REGION
DIVISION OF ENGINEERING

LAST REVISION: DATE PLOTTED => 18-MAR-2015
02-26-14 TIME PLOTTED => 15:08

Dist	COUNTY	ROUTE	POST MILES TOTAL PROJECT	SHEET No.	TOTAL SHEETS
03	ED	89	13.8/18.0	38	164

Fermin Barriga B. 6-9-14
REGISTERED CIVIL ENGINEER DATE

6-16-14
PLANS APPROVAL DATE

REGISTERED PROFESSIONAL ENGINEER
FERMIN BARRIGA
No. C47047
Exp. 12-31-15
CIVIL
STATE OF CALIFORNIA

THE STATE OF CALIFORNIA OR ITS OFFICERS OR AGENTS SHALL NOT BE RESPONSIBLE FOR THE ACCURACY OR COMPLETENESS OF SCANNED COPIES OF THIS PLAN SHEET.

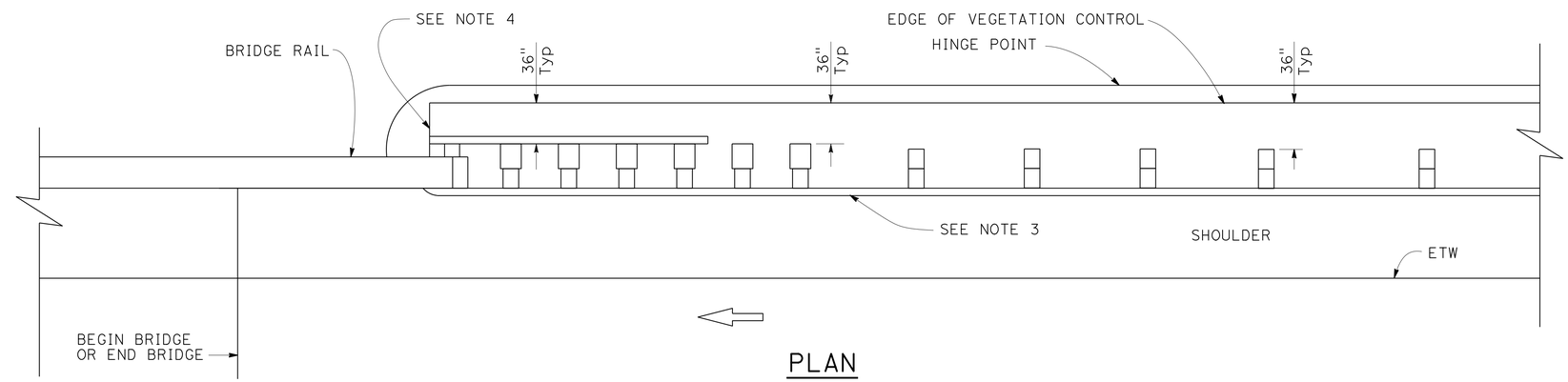

PLAN

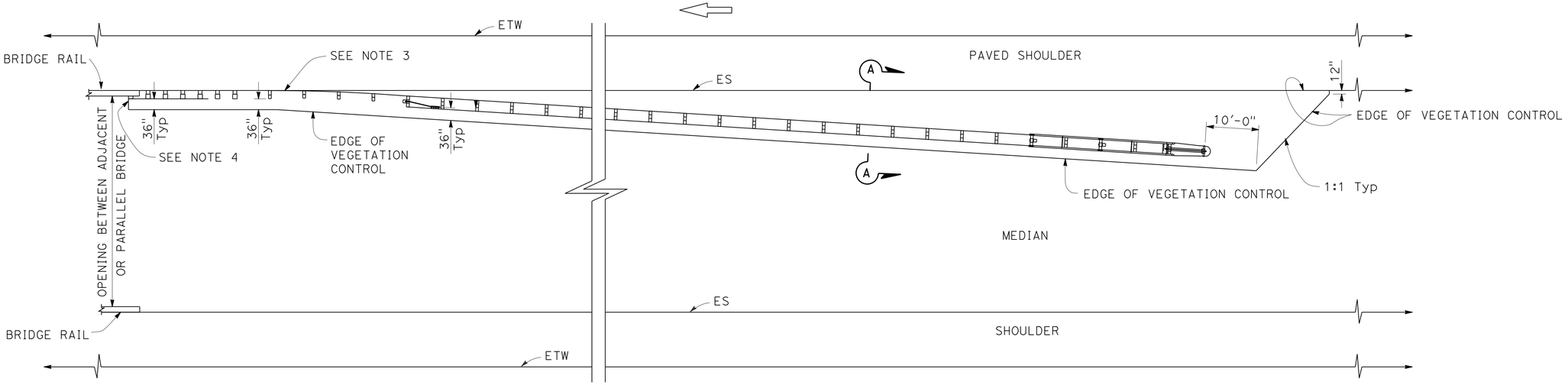

PLAN

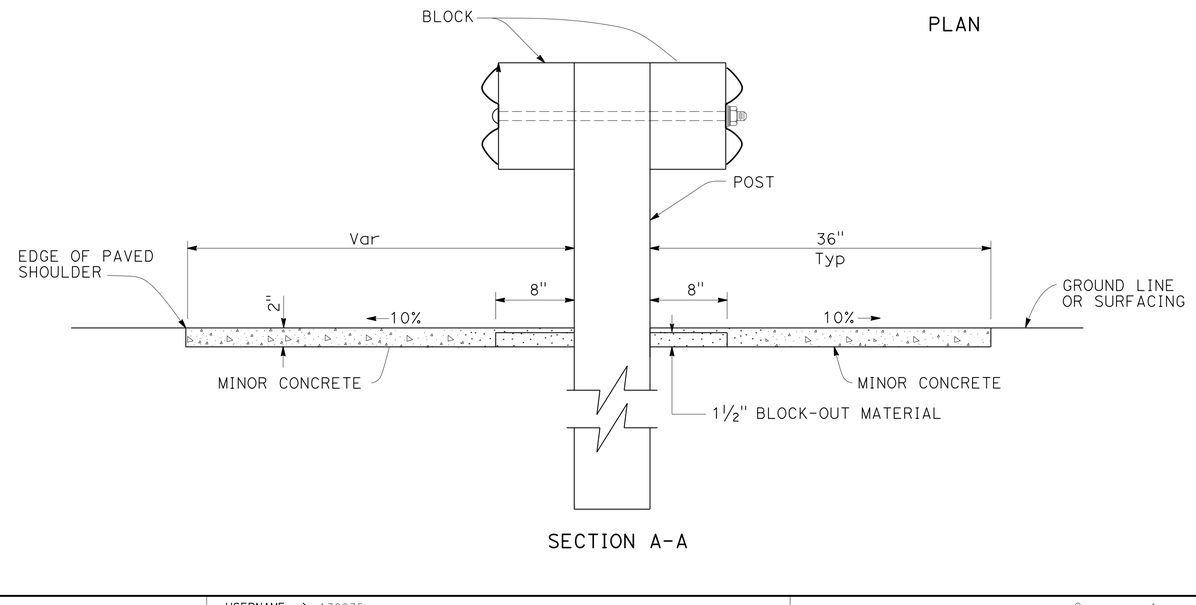

SECTION A-A

NOTES:

1. SEE SHEET C-17 FOR ADDITIONAL VEGETATION CONTROL DETAILS.
2. WHERE THE DISTANCE BETWEEN BACK OF POST AND HINGE POINT IS LESS THAN 42", CONSTRUCT VEGETATION CONTROL TO THE HINGE POINT WHILE MAINTAINING THE 8" BLOCK-OUT AT BACK OF POST. IF THE 8" BLOCK-OUT AT BACK OF POST CAN NOT BE MAINTAINED, CONSTRUCT VEGETATION CONTROL FLUSH WITH THE BACK EDGE OF POST.
3. WHERE DIKE IS CONSTRUCTED UNDER RAILING, CONSTRUCT VEGETATION CONTROL TO BACK EDGE OF DIKE. WHERE PAVED SHOULDER IS CONSTRUCTED WITHIN 36" IN FRONT OF THE POST, CONSTRUCT VEGETATION CONTROL TO THE EDGE OF PAVED SHOULDER.
4. END VEGETATION CONTROL AT END OF BACKSIDE RAIL ELEMENT.

CONSTRUCTION DETAILS
METAL BEAM GUARD RAILING
TYPICAL VEGETATION CONTROL AT STRUCTURE APPROACH

NO SCALE

C-19

REVISED BY | DATE REVISED
FERMIN BARRIGA | MAHBOOBEH DEILAMI
CALCULATED-DESIGNED BY | CHECKED BY
FUNCTIONAL SUPERVISOR | CARLOS A. PORTILLO
STATE OF CALIFORNIA - DEPARTMENT OF TRANSPORTATION
NORTH REGION
DIVISION OF ENGINEERING
Caltrans

LAST REVISION | DATE PLOTTED => 18-MAR-2015
02-26-14 | TIME PLOTTED => 15:08

Dist	COUNTY	ROUTE	POST MILES TOTAL PROJECT	SHEET No.	TOTAL SHEETS
03	ED	89	13.8/18.0	39	164

Fermin Barriga B. 6-9-14
REGISTERED CIVIL ENGINEER DATE

6-16-14
PLANS APPROVAL DATE

REGISTERED PROFESSIONAL ENGINEER
FERMIN BARRIGA
No. C47047
Exp. 12-31-15
CIVIL
STATE OF CALIFORNIA

THE STATE OF CALIFORNIA OR ITS OFFICERS OR AGENTS SHALL NOT BE RESPONSIBLE FOR THE ACCURACY OR COMPLETENESS OF SCANNED COPIES OF THIS PLAN SHEET.

NOTES:

1. BRIDGE ANCHOR BLOCKS SHALL BE SHIELDED FROM TRAFFIC UNTIL ANCHOR BLOCK CONCRETE CURES AND PERMANENT MBGR OR MGS CONNECTION IS PLACED.
2. THIS SHIELD DETAIL IS A SUGGESTED DETAIL. THE WORK FOR THIS DETAIL OR AN ALTERNATE DETAIL THAT MAY BE APPROVED BY THE ENGINEER IS NOT A SEPARATE PAY ITEM.
3. FOR END ANCHOR BLOCK CONSTRUCTION DETAILS, SEE SHEET C-1.
4. REMOVE MBGR POST(S), EXCAVATE FOR ANCHOR BLOCK, FORM AND POUR ANCHOR BLOCK, AND PLACE NESTED RAIL, AS SHOWN BELOW, UNTIL BLOCK CONCRETE CURES.
5. EXISTING POST SPACING MAY BE 3'-1½" OR EVEN VARIABLE DEPENDING ON FIELD CONDITIONS.
6. MBGR AND/OR MGS WORK IS TO BE DONE USING THE APPROPRIATE TRAFFIC CONTROL Std PLAN RSP T10, RSP T11, RSP T13, AND RSP T14.

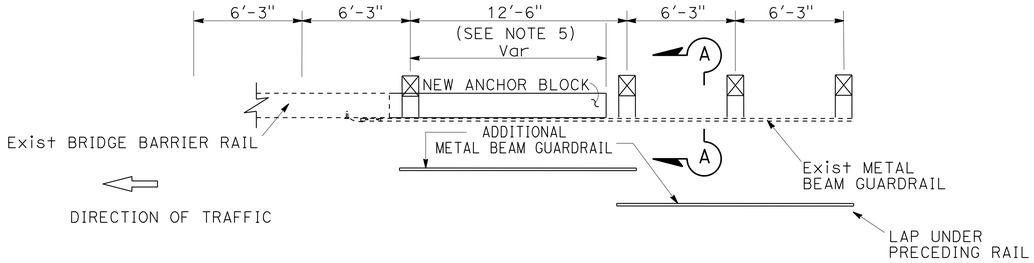

BRIDGE ANCHOR BLOCK SHIELD DETAIL
(SEE NOTE 2)

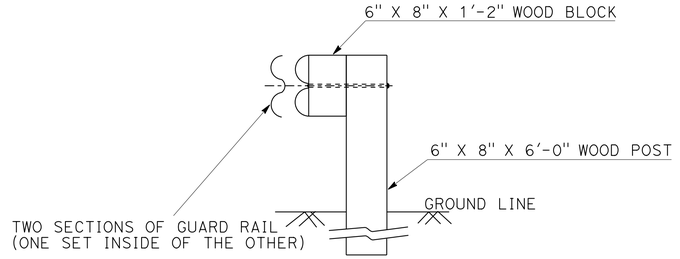

SECTION A-A

CONSTRUCTION DETAILS
STAGE CONSTRUCTION DETAILS
NO SCALE

C-20

STATE OF CALIFORNIA - DEPARTMENT OF TRANSPORTATION
Caltrans®
NORTH REGION
DIVISION OF ENGINEERING
FUNCTIONAL SUPERVISOR: CARLOS A. PORTILLO
CALCULATED-DESIGNED BY: FERMIN BARRIGA
CHECKED: HORACIO PARAS JR
REVISED BY
DATE REVISED

LAST REVISION
DATE PLOTTED => 18-MAR-2015
TIME PLOTTED => 15:08
04-09-14

BORDER LAST REVISED 7/2/2010
USERNAME => s130875
DGN FILE => 0300000224ga020.dgn
RELATIVE BORDER SCALE IS IN INCHES 0 1 2 3
UNIT 0305
PROJECT NUMBER & PHASE 03000002241

Dist	COUNTY	ROUTE	POST MILES TOTAL PROJECT	SHEET No.	TOTAL SHEETS
03	ED	89	13.8/18.0	40	164

Fermin Barriga 6-9-14
REGISTERED CIVIL ENGINEER DATE

6-16-14
PLANS APPROVAL DATE

REGISTERED PROFESSIONAL ENGINEER
FERMIN BARRIGA
No. C47047
Exp. 12-31-15
CIVIL
STATE OF CALIFORNIA

THE STATE OF CALIFORNIA OR ITS OFFICERS OR AGENTS SHALL NOT BE RESPONSIBLE FOR THE ACCURACY OR COMPLETENESS OF SCANNED COPIES OF THIS PLAN SHEET.

NOTES:

1. BOTTOM OF DITCH SHALL BE REINFORCED WITH 4" x 4", 10 Ga/10 Ga, WELDED WIRE FABRIC (WWF).
2. FOR STRUCTURAL SECTIONS SHOWN, SEE TYPICAL CROSS SECTIONS ON SHEET X-1.
3. FOR MINOR CONCRETE (CURB) AND CONCRETE (DITCH LINING) QUANTITIES, SEE SUMMARY OF QUANTITIES SHEET Q-3.
4. SEE LAYOUT AND QUANTITY SHEETS FOR LOCATIONS AND TYPE OF CURB. SEE STANDARD PLANS FOR TYPE B1-4 AND B1-6 CONCRETE CURBS.

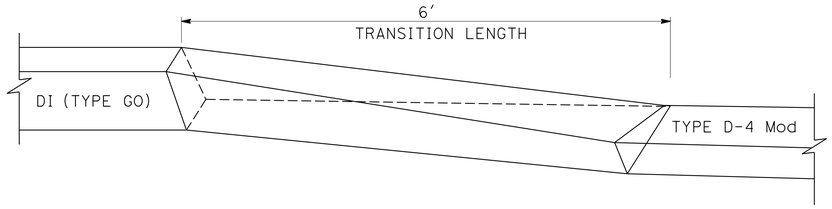

CONCRETE CURB TRANSITION
TYPE D-4 Mod CURBS TO DI(TYPE GO)

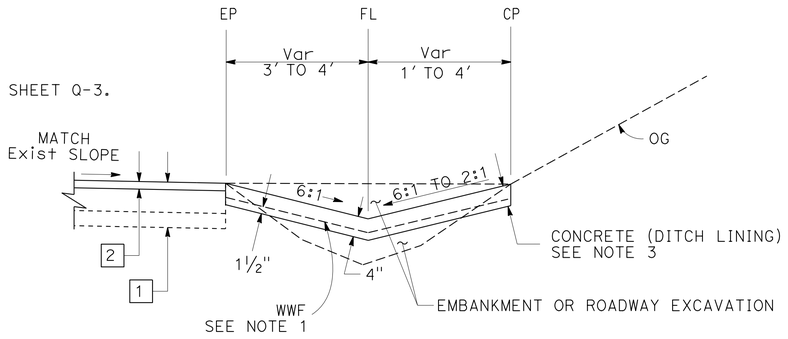

CONCRETE LINED DITCH:
CONCRETE (DITCH LINING)

Sta "A3" 270+66.26 TO Sta "A3" 271+75.00 Rt
Sta "A3" 350+00.00 TO Sta "A3" 352+09.90 Rt
Sta "A3" 349+75.00 TO Sta "A3" 353+21.56 Lt
Sta "A3" 363+60.00 TO Sta "A3" 364+15.00 Rt

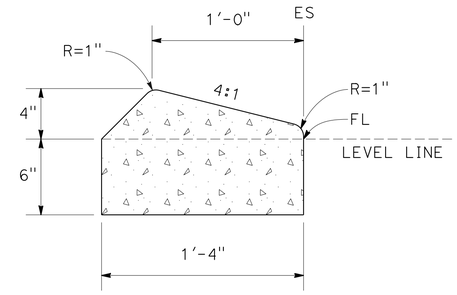

TYPE D-4 Mod
CURB DETAIL

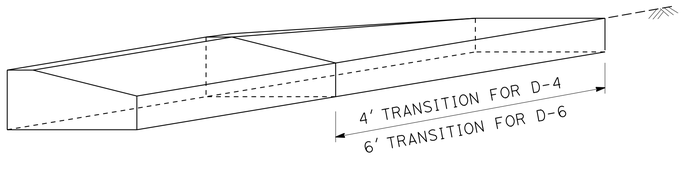

CONCRETE CURB TRANSITION
TYPE D-4 AND D-6 CURBS TO OG

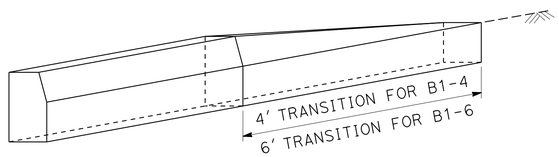

CONCRETE CURB TRANSITION
TYPE B1-4 AND B1-6 CURBS TO OG

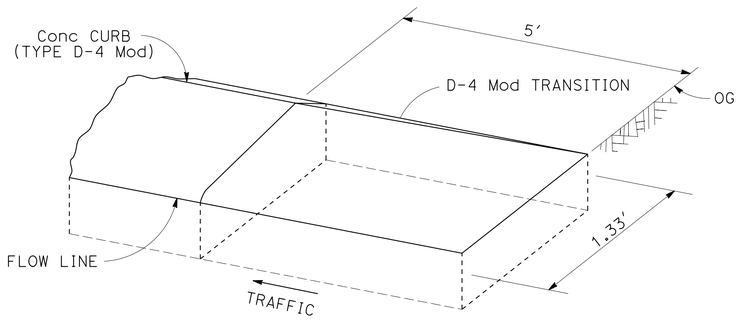

CONCRETE CURB (TYPE D-4 Mod) TRANSITION TO OG

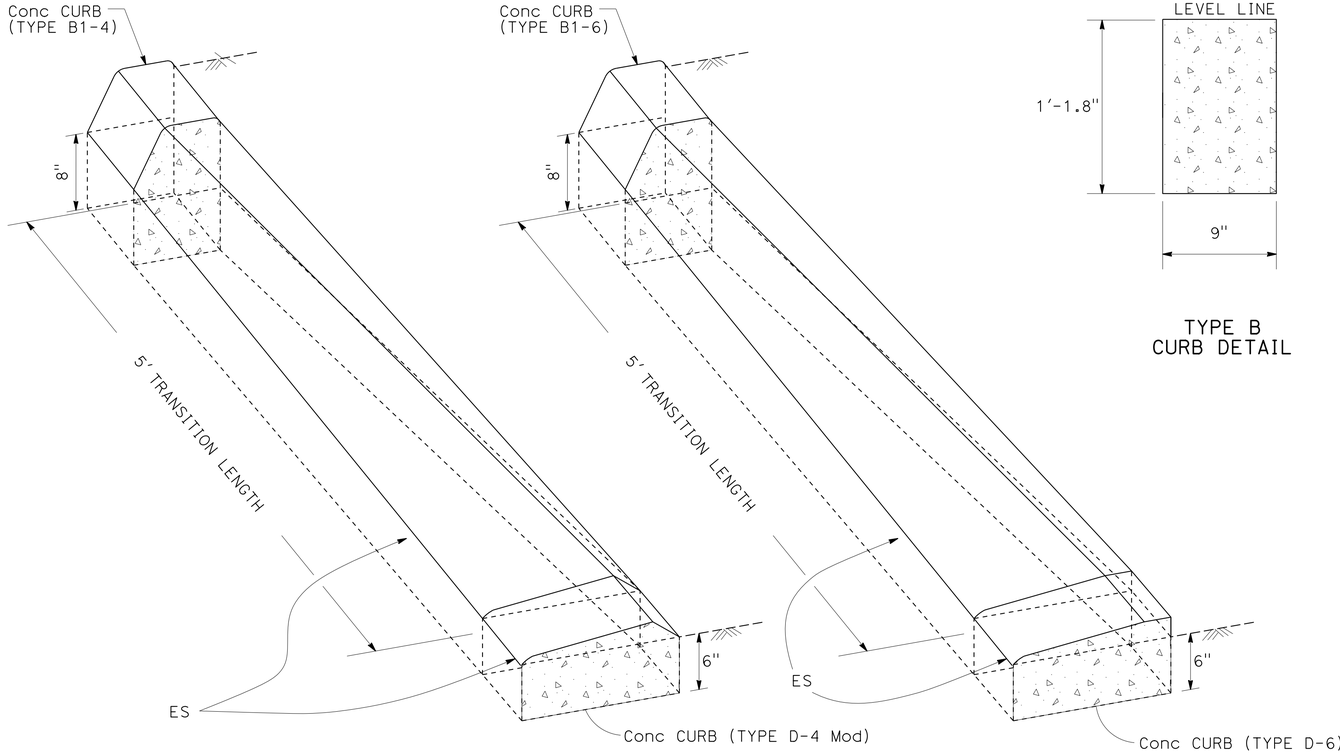

CONCRETE CURB TRANSITION
TYPE B1-4 CURB TO TYPE D-4 Mod CURB
TYPE B1-6 CURB TO TYPE D-6 CURB

TYPE B
CURB DETAIL

PCC CURB:
MINOR CONCRETE (CURB)

CONSTRUCTION DETAILS

NO SCALE **C-21**

CALCULATED-DESIGNED BY
CHECKED BY
REVISED BY
DATE REVISED
HORACIO PARAS JR
FERMIN BARRIGA
FUNCTIONAL SUPERVISOR
CARLOS A. PORTILLO
STATE OF CALIFORNIA - DEPARTMENT OF TRANSPORTATION
NORTH REGION
DIVISION OF ENGINEERING
Caltrans

LAST REVISION | DATE PLOTTED => 18-MAR-2015
05-30-14 | TIME PLOTTED => 15:08

BORDER LAST REVISED 7/2/2010
USERNAME => s130875
DGN FILE => 0300000224ga021.dgn
RELATIVE BORDER SCALE IS IN INCHES 0 1 2 3
UNIT 0305
PROJECT NUMBER & PHASE 03000002241

Dist	COUNTY	ROUTE	POST MILES TOTAL PROJECT	SHEET No.	TOTAL SHEETS
03	ED	89	13.8/18.0	41	164

Fermin Barriga B. 6-9-14
REGISTERED CIVIL ENGINEER DATE

6-16-14
PLANS APPROVAL DATE

REGISTERED PROFESSIONAL ENGINEER
FERMIN BARRIGA
No. C47047
Exp. 12-31-15
CIVIL
STATE OF CALIFORNIA

THE STATE OF CALIFORNIA OR ITS OFFICERS OR AGENTS SHALL NOT BE RESPONSIBLE FOR THE ACCURACY OR COMPLETENESS OF SCANNED COPIES OF THIS PLAN SHEET.

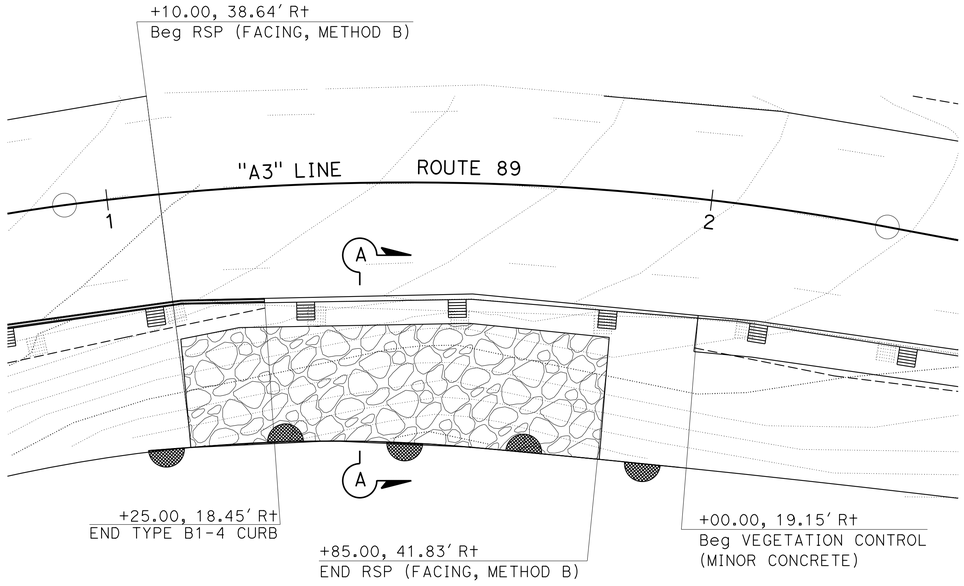

PLAN VIEW

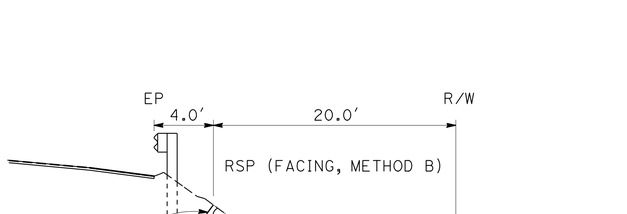

SECTION A-A

ROCK SLOPE PROTECTION DETAIL

Sta "A3" 321+10.00 TO Sta "A3" 321+85.00 Rt

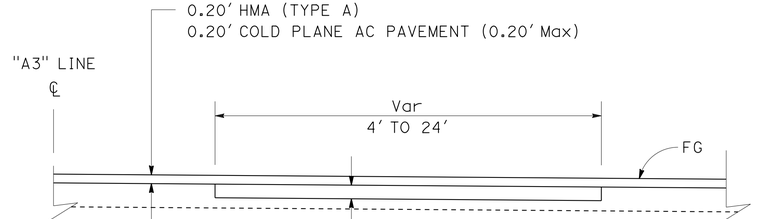

REPLACE AC SURFACING

MAINLINE

CONSTRUCTION DETAILS

NO SCALE **C-22**

STATE OF CALIFORNIA - DEPARTMENT OF TRANSPORTATION
NORTH REGION
DIVISION OF ENGINEERING

FUNCTIONAL SUPERVISOR: CARLOS A. PORTILLO

CALCULATED-DESIGNED BY: HORACIO PARAS JR
CHECKED BY: FERMIN BARRIGA

REVISED BY | DATE REVISED

LAST REVISION 06-04-14 | DATE PLOTTED => 18-MAR-2015 | TIME PLOTTED => 15:08

BORDER LAST REVISED 7/2/2010

USERNAME => s130875
DGN FILE => 0300000224ga022.dgn

RELATIVE BORDER SCALE IS IN INCHES 0 1 2 3

UNIT 0305 | PROJECT NUMBER & PHASE 03000002241

Dist	COUNTY	ROUTE	POST MILES TOTAL PROJECT	SHEET No.	TOTAL SHEETS
03	ED	89	13.8/18.0	42	164

Fermin Barriga B. 6-9-14
REGISTERED CIVIL ENGINEER DATE

FERMIN BARRIGA No. C47047 Exp. 12-31-15 CIVIL — REGISTERED PROFESSIONAL ENGINEER — STATE OF CALIFORNIA

6-16-14
PLANS APPROVAL DATE

THE STATE OF CALIFORNIA OR ITS OFFICERS OR AGENTS SHALL NOT BE RESPONSIBLE FOR THE ACCURACY OR COMPLETENESS OF SCANNED COPIES OF THIS PLAN SHEET.

NOTES:

1. BOTTOM OF DITCH SHALL BE REINFORCED WITH 4" x 4", 10 Ga/10 Ga, WELDED WIRE FABRIC (WWF).
2. FOR STRUCTURAL SECTIONS SHOWN, SEE TYPICAL CROSS SECTIONS SHEET X-1.
3. FOR CONCRETE (DITCH LINING) QUANTITIES, SEE SUMMARY OF QUANTITIES SHEET Q-3.

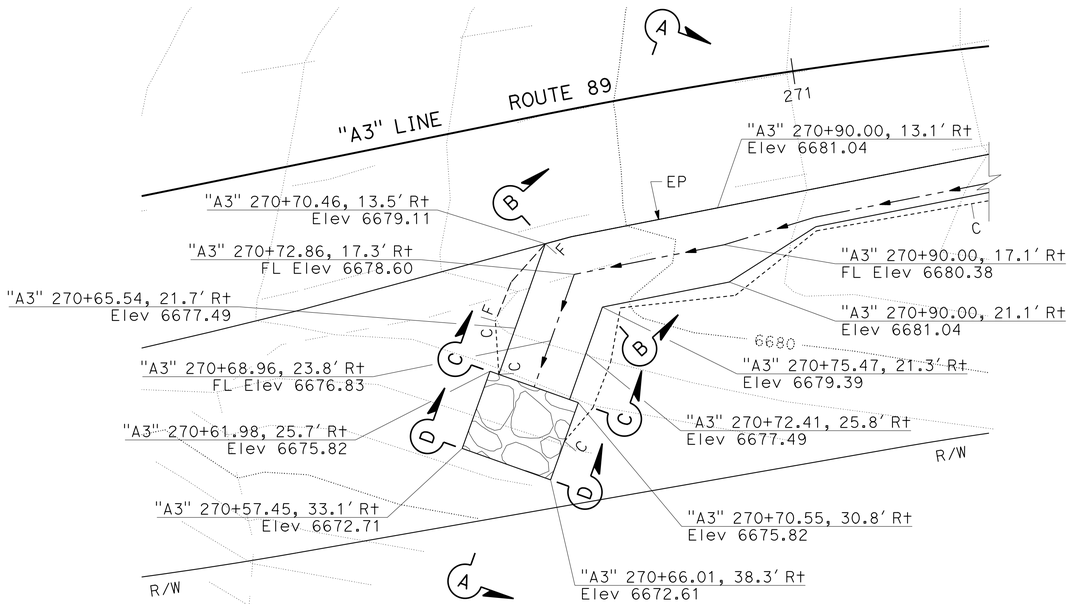

PLAN VIEW

CONCRETE LINED DITCH DETAILS

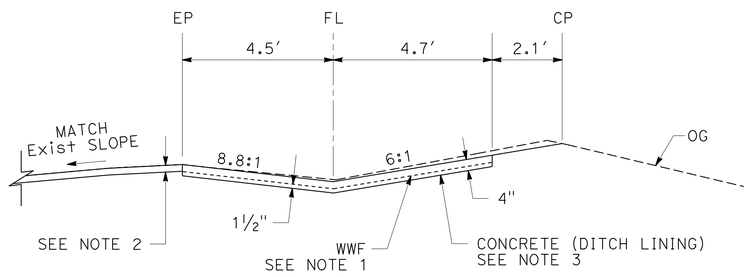

SECTION B-B

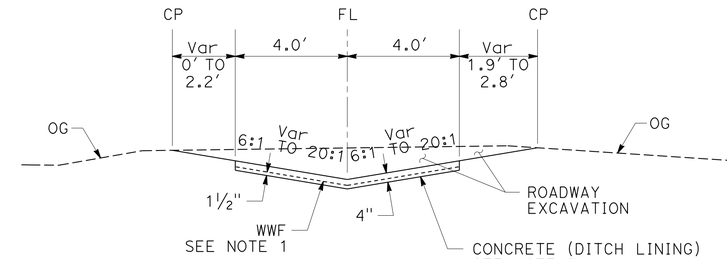

SECTION C-C

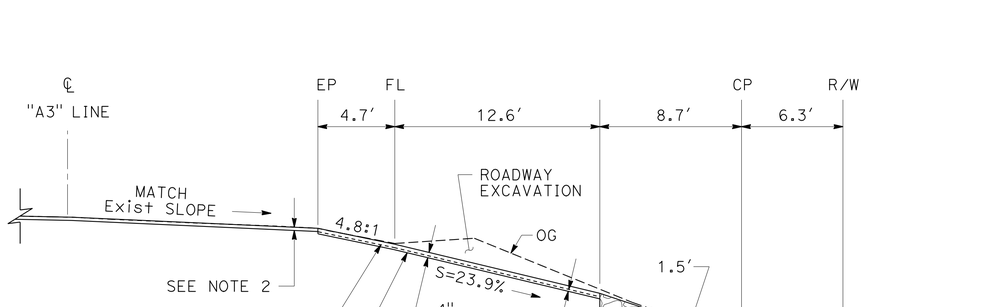

SECTION A-A

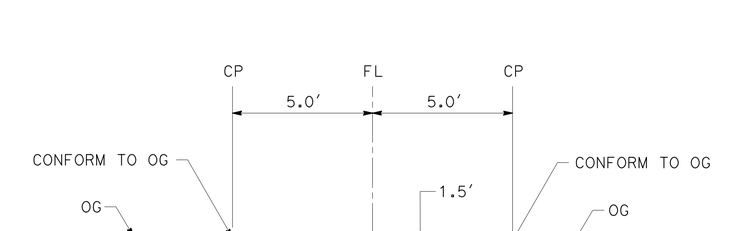

SECTION D-D
CONFORM TO OG

CONSTRUCTION DETAILS

NO SCALE **C-23**

STATE OF CALIFORNIA - DEPARTMENT OF TRANSPORTATION
NORTH REGION
DIVISION OF ENGINEERING
Caltrans®

FUNCTIONAL SUPERVISOR: CARLOS A. PORTILLO
CALCULATED-DESIGNED BY:
CHECKED BY:
JOSE LUIS VALDEZ
J. A. HUERTA
REVISED BY
DATE REVISED

LAST REVISION 05-12-14
DATE PLOTTED => 18-MAR-2015
TIME PLOTTED => 15:08

BORDER LAST REVISED 7/2/2010
USERNAME => s130875
DGN FILE => 0300000224ga023.dgn
RELATIVE BORDER SCALE IS IN INCHES 0 1 2 3
UNIT 0305
PROJECT NUMBER & PHASE 03000002241

Dist	COUNTY	ROUTE	POST MILES TOTAL PROJECT	SHEET No.	TOTAL SHEETS
03	ED	89	13.8/18.0	43	164

Fermin Barriga B. 6-9-14
REGISTERED CIVIL ENGINEER DATE

6-16-14
PLANS APPROVAL DATE

REGISTERED PROFESSIONAL ENGINEER
FERMIN BARRIGA
No. C47047
Exp. 12-31-15
CIVIL
STATE OF CALIFORNIA

THE STATE OF CALIFORNIA OR ITS OFFICERS OR AGENTS SHALL NOT BE RESPONSIBLE FOR THE ACCURACY OR COMPLETENESS OF SCANNED COPIES OF THIS PLAN SHEET.

NOTES:

1. FOR ADDITIONAL Mod HMA OVERSIDE DRAIN INFORMATION, SEE LAYOUT SHEETS L-6 AND L-10 AND SUMMARY OF QUANTITIES SHEET Q-3.

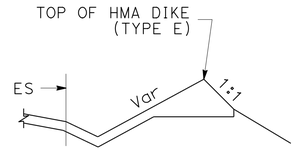

SECTION C-C

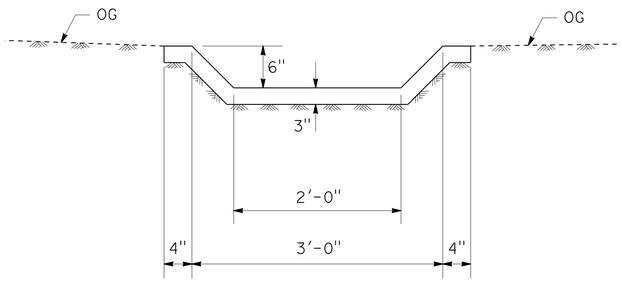

SECTION B-B

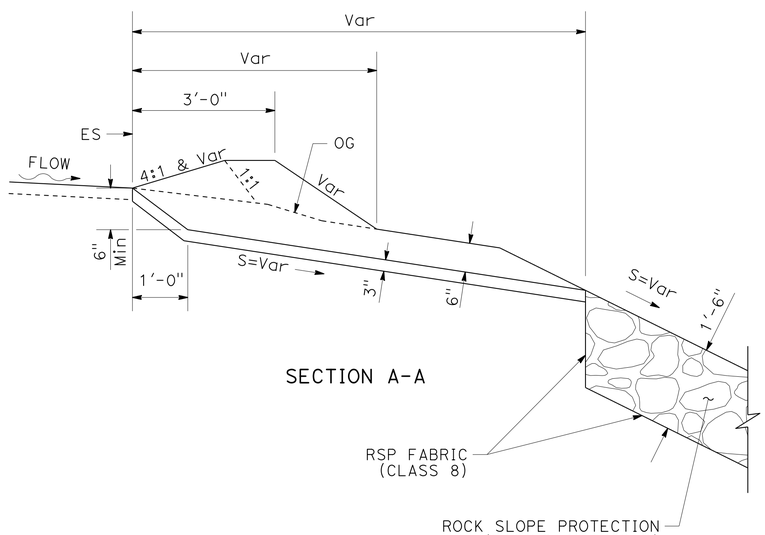

SECTION A-A

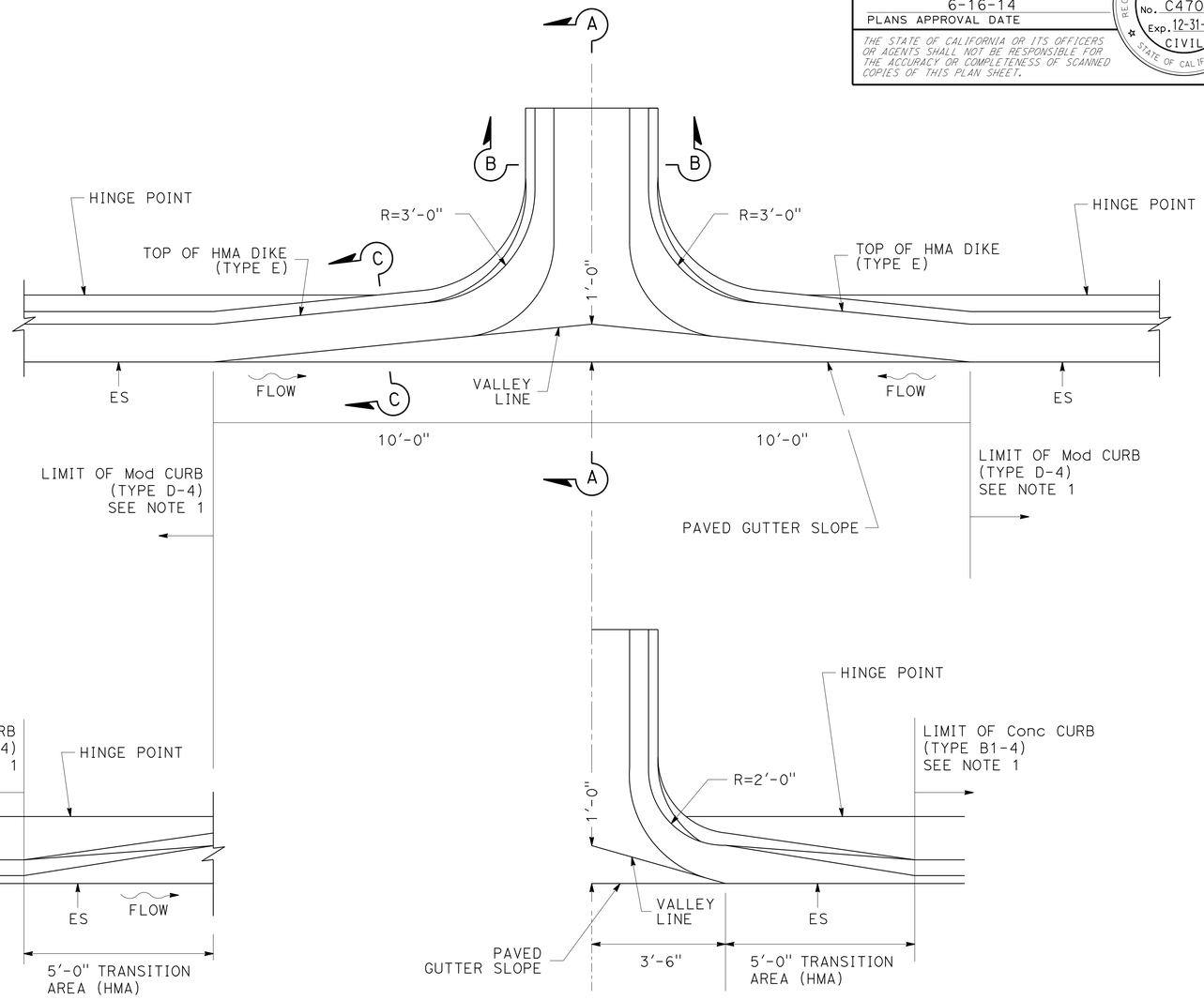

PLAN VIEW

Mod HMA OVERSIDE DRAIN DETAIL

CONSTRUCTION DETAILS

NO SCALE **C-24**

STATE OF CALIFORNIA - DEPARTMENT OF TRANSPORTATION
Caltrans
NORTH REGION
DIVISION OF ENGINEERING
FUNCTIONAL SUPERVISOR: CARLOS A. PORTILLO
CALCULATED-DESIGNED BY: JOSE LUIS VALDEZ
CHECKED BY: FERMIN BARRIGA
REVISED BY
DATE REVISED

LAST REVISION: DATE PLOTTED => 18-MAR-2015
03-11-14 TIME PLOTTED => 15:08

BORDER LAST REVISED 7/2/2010 | USERNAME => s130875 | DGN FILE => 0300000224ga024.dgn | RELATIVE BORDER SCALE IS IN INCHES 0 1 2 3 | UNIT 0305 | PROJECT NUMBER & PHASE 03000002241

Dist	COUNTY	ROUTE	POST MILES TOTAL PROJECT	SHEET No.	TOTAL SHEETS
03	ED	89	13.8/18.0	44	164

Fermin Barriga 6-9-14
REGISTERED CIVIL ENGINEER DATE

6-16-14
PLANS APPROVAL DATE

FERMIN BARRIGA No. C47047 Exp. 12-31-15 CIVIL — REGISTERED PROFESSIONAL ENGINEER — STATE OF CALIFORNIA

THE STATE OF CALIFORNIA OR ITS OFFICERS OR AGENTS SHALL NOT BE RESPONSIBLE FOR THE ACCURACY OR COMPLETENESS OF SCANNED COPIES OF THIS PLAN SHEET.

NOTES:

1. FOR ACCURATE RIGHT OF WAY DATA, CONTACT RIGHT OF WAY ENGINEERING AT THE DISTRICT OFFICE.
2. PLACE RSP FABRIC (CLASS 8) ON ALL SIDES EXCEPT TOP OF CONCRETED-RSP (FACING, METHOD A).

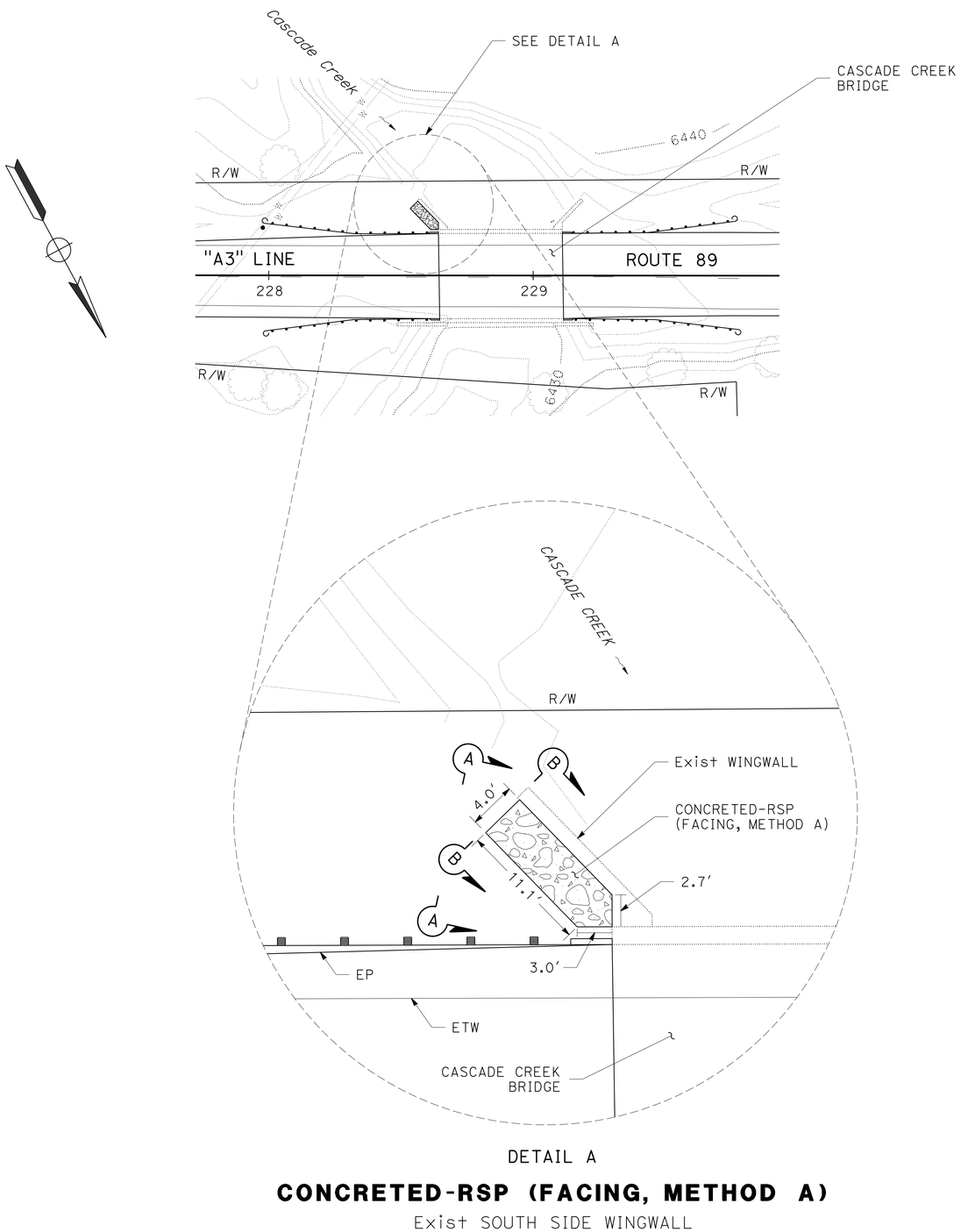

DETAIL A

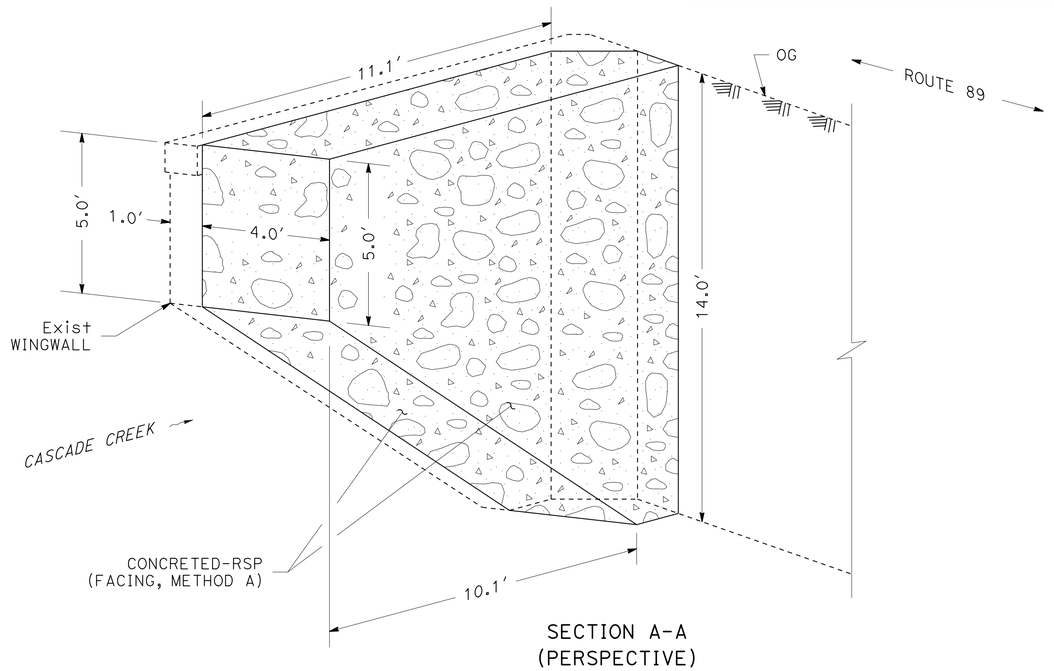

SECTION A-A
(PERSPECTIVE)

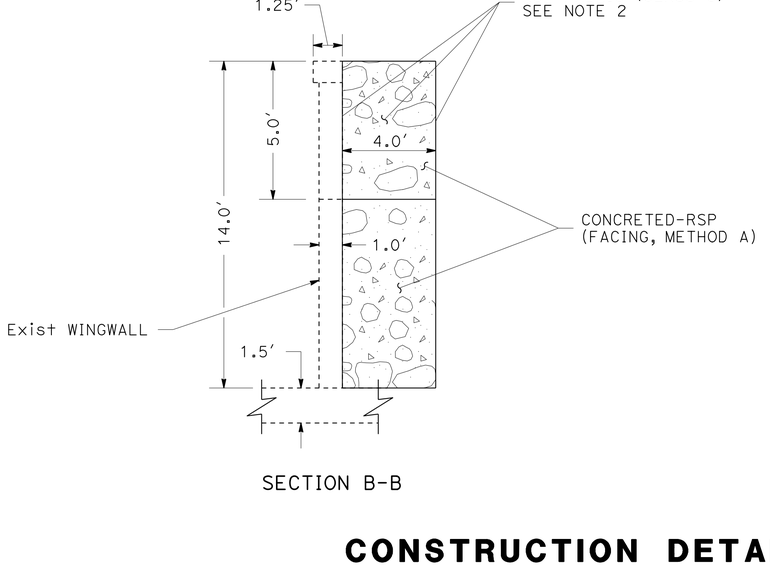

SECTION B-B

CONCRETED-RSP (FACING, METHOD A)

Exist SOUTH SIDE WINGWALL
AT CASCADE CREEK BRIDGE

CONSTRUCTION DETAILS

NO SCALE **C-25**

STATE OF CALIFORNIA - DEPARTMENT OF TRANSPORTATION
NORTH REGION
DIVISION OF ENGINEERING
Caltrans

FUNCTIONAL SUPERVISOR: CARLOS A. PORTILLO
CALCULATED-DESIGNED BY: JOSE LUIS VALDEZ
CHECKED BY: FERMIN BARRIGA
REVISED BY
DATE REVISED

LAST REVISION DATE PLOTTED => 18-MAR-2015
05-16-14 TIME PLOTTED => 15:08

BORDER LAST REVISED 7/2/2010
USERNAME => s130875
DGN FILE => 0300000224ga025.dgn
RELATIVE BORDER SCALE IS IN INCHES 0 1 2 3
UNIT 0305
PROJECT NUMBER & PHASE 03000002241

Dist	COUNTY	ROUTE	POST MILES TOTAL PROJECT	SHEET No.	TOTAL SHEETS
03	ED	89	13.8/18.0	45	164

Fermin Barriga 6-9-14
REGISTERED CIVIL ENGINEER DATE

FERMIN BARRIGA No. C47047 Exp. 12-31-15 CIVIL — REGISTERED PROFESSIONAL ENGINEER — STATE OF CALIFORNIA

6-16-14
PLANS APPROVAL DATE

THE STATE OF CALIFORNIA OR ITS OFFICERS OR AGENTS SHALL NOT BE RESPONSIBLE FOR THE ACCURACY OR COMPLETENESS OF SCANNED COPIES OF THIS PLAN SHEET.

NOTES:

1. Approx LOCATION OF Exist 6" AND 8" WATER LINES. CONTRACTOR SHALL PROTECT IN PLACE Exist 6" AND 8" WATER LINES.

LEGEND:

TFESA TEMPORARY FENCE (TYPE ESA)

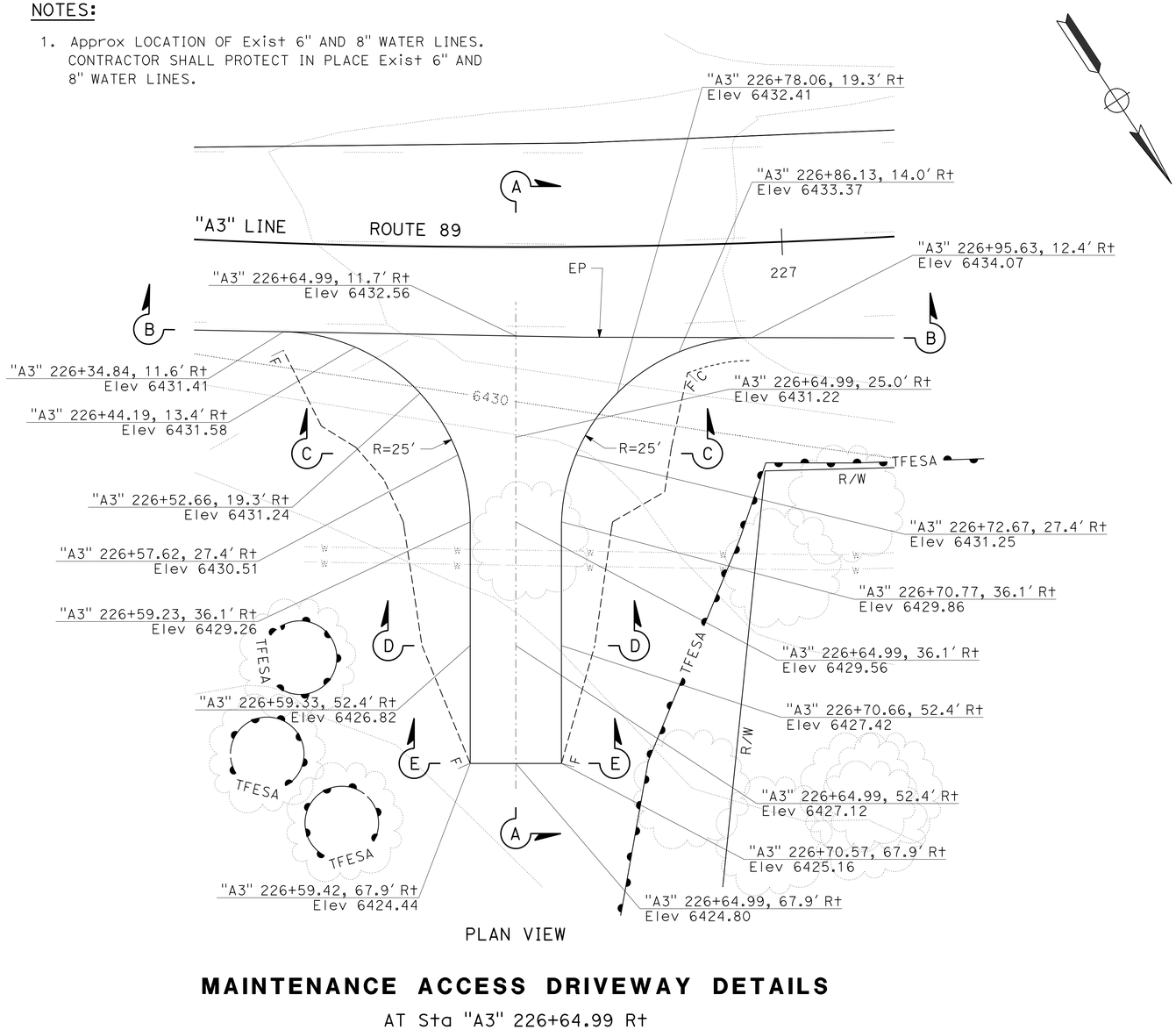

PLAN VIEW

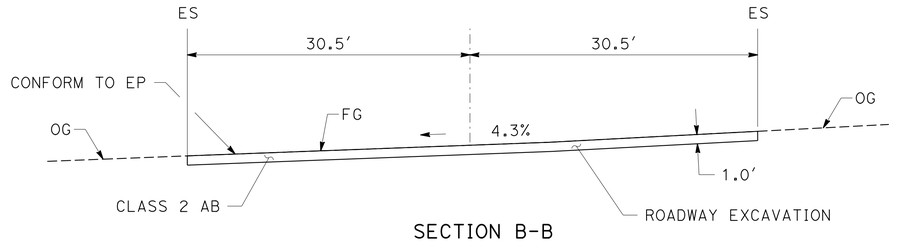

SECTION B-B
CONFORM TO EP

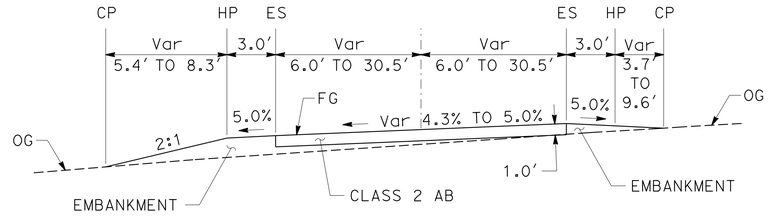

SECTION C-C

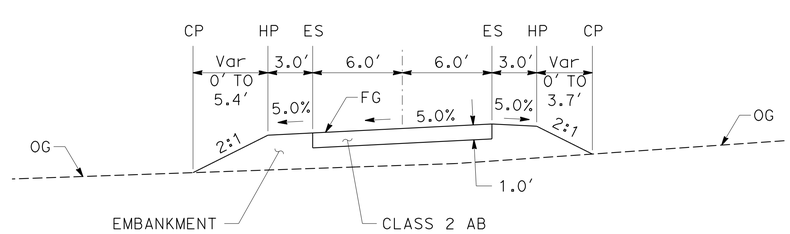

SECTION D-D

MAINTENANCE ACCESS DRIVEWAY DETAILS

AT Sta "A3" 226+64.99 Rt

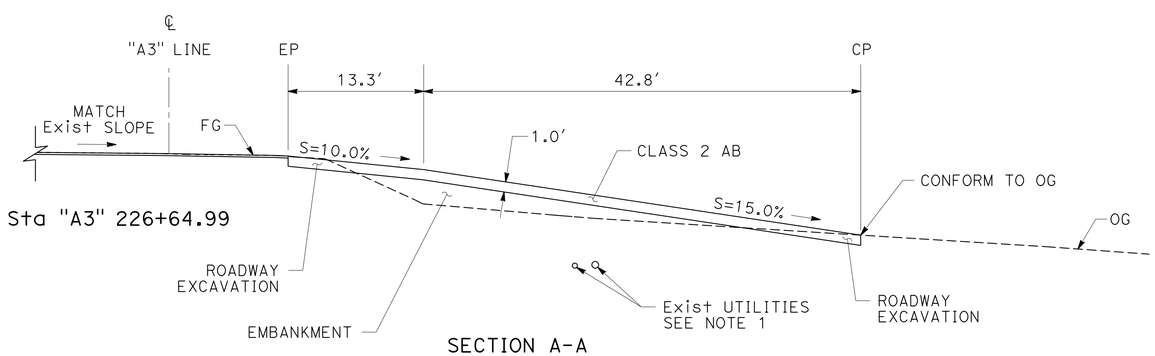

SECTION A-A

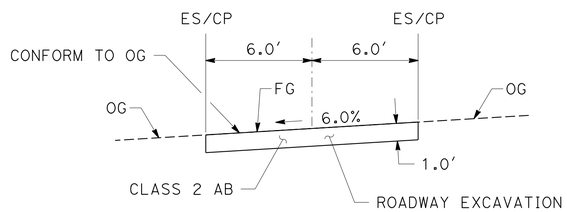

SECTION E-E
CONFROM TO OG

CONSTRUCTION DETAILS

NO SCALE **C-26**

STATE OF CALIFORNIA - DEPARTMENT OF TRANSPORTATION
NORTH REGION
DIVISION OF ENGINEERING
Caltrans

JOSE LUIS VALDEZ — CALCULATED-DESIGNED BY
FERMIN BARRIGA — CHECKED BY
CARLOS A. PORTILLO — FUNCTIONAL SUPERVISOR
REVISED BY — DATE REVISED

LAST REVISION 06-06-14
DATE PLOTTED => 18-MAR-2015
TIME PLOTTED => 15:08

Dist	COUNTY	ROUTE	POST MILES TOTAL PROJECT	SHEET No.	TOTAL SHEETS
03	ED	89	13.8/18.0	46	164

Fermin Barriga 6-9-14
REGISTERED CIVIL ENGINEER DATE

FERMIN BARRIGA No. C47046 Exp. 12-31-15 CIVIL — REGISTERED PROFESSIONAL ENGINEER — STATE OF CALIFORNIA

6-16-14
PLANS APPROVAL DATE

THE STATE OF CALIFORNIA OR ITS OFFICERS OR AGENTS SHALL NOT BE RESPONSIBLE FOR THE ACCURACY OR COMPLETENESS OF SCANNED COPIES OF THIS PLAN SHEET.

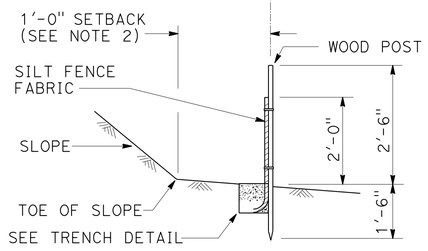

SECTION A-A
TEMPORARY SILT FENCE

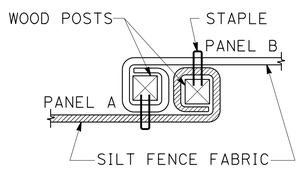

PLAN
POST AT JOINTS
(SEE NOTE 3)

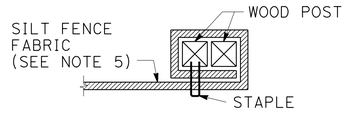

PLAN
END POST DETAIL

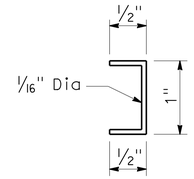

STAPLE DETAIL
(SEE NOTE 6)

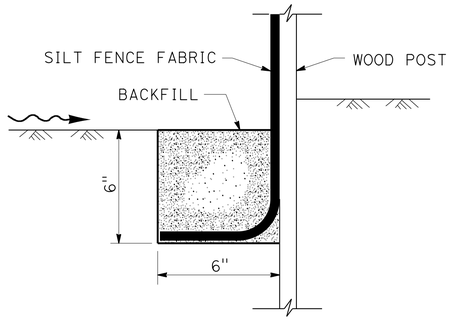

SECTION
TRENCH DETAIL

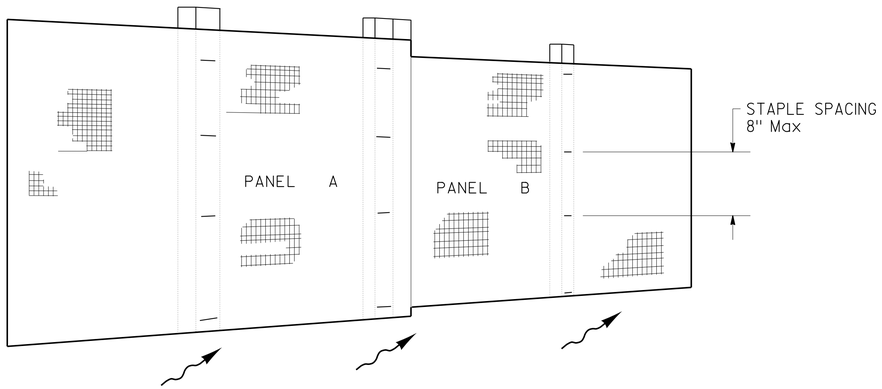

PERSPECTIVE
SILT FENCE PANELS AT JOINTS

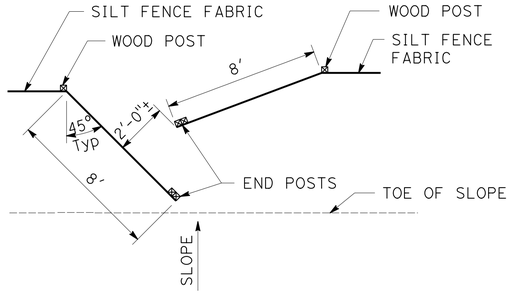

PLAN
OPTIONAL MAINTENANCE OPENING DETAIL

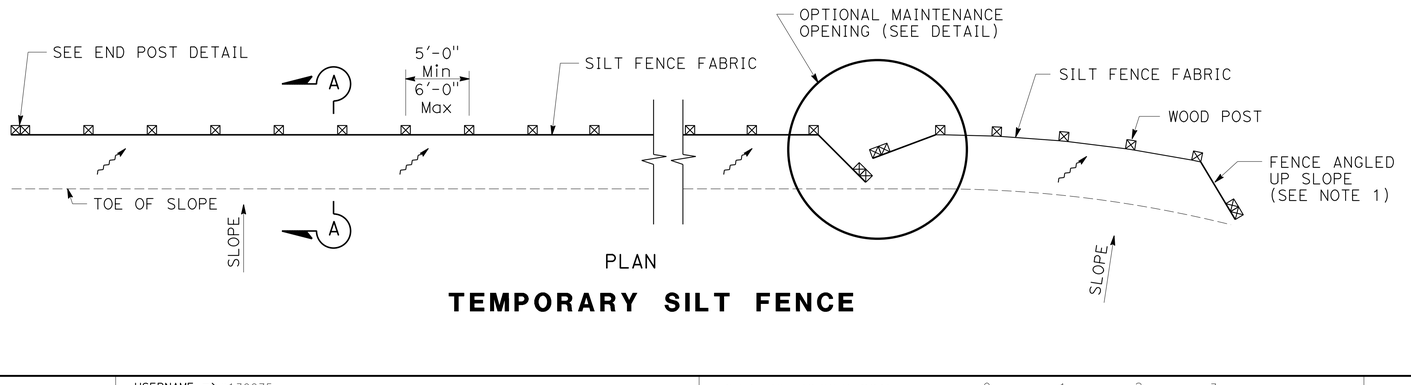

PLAN
TEMPORARY SILT FENCE

NOTES:

1. THE DOWN STREAM END OF THE TEMPORARY SILT FENCE SHALL HAVE THE LAST 8' ANGLED UP SLOPE.
2. SETBACK DIMENSIONS MAY VARY TO FIT FIELD CONDITIONS.
3. POSTS TO OVERLAP AND FENCE FABRIC TO FOLD AROUND EACH POST ONE FULL TURN. SECURE FABRIC WITH 4 STAPLES FOR EACH POST.
4. POSTS SHALL BE DRIVEN TIGHTLY TOGETHER TO PREVENT POTENTIAL FLOW-THROUGH OF SEDIMENT AT THE JOINT. THE TOPS OF THE POSTS SHALL BE SECURED TO EACH OTHER WITH WIRE.
5. FOR EACH END POST, FENCE FABRIC SHALL BE FOLDED AROUND TWO POSTS ONE FULL TURN AND SECURED WITH 4 STAPLES.
6. MINIMUM OF 4 STAPLES SHALL BE INSTALLED PER POST. DIMENSIONS SHOWN ARE TYPICAL
7. MAINTENANCE OPENINGS SHALL BE CONSTRUCTED IN A MANNER TO ENSURE THAT SEDIMENT IS RETAINED BY THE TEMPORARY SILT FENCE
8. JOINT SECTIONS SHALL NOT BE PLACED AT SUMP LOCATIONS.

LEGEND

- TAMPED BACKFILL
- SLOPE DIRECTION
- DIRECTION OF FLOW

TEMPORARY WATER POLLUTION CONTROL DETAILS
TEMPORARY SILT FENCE

NO SCALE

WPCD-1

CALCULATED-DESIGNED BY: SALAHUDDIN CHOWDHURY
CHECKED BY: FERMIN BARRIGA
FUNCTIONAL SUPERVISOR: CARLOS A. PORTILLO
REVISED BY
DATE REVISED
STATE OF CALIFORNIA - DEPARTMENT OF TRANSPORTATION
NORTH REGION
DIVISION OF ENGINEERING
Caltrans

LAST REVISION DATE PLOTTED => 18-MAR-2015
TIME PLOTTED => 15:08
03-05-14

Dist	COUNTY	ROUTE	POST MILES TOTAL PROJECT	SHEET No.	TOTAL SHEETS
03	ED	89	13.8/18.0	47	164

Fermin Barriga B. 6-9-14
REGISTERED CIVIL ENGINEER DATE

6-16-14
PLANS APPROVAL DATE

REGISTERED PROFESSIONAL ENGINEER
FERMIN BARRIGA
No. C47047
Exp. 12-31-15
CIVIL
STATE OF CALIFORNIA

THE STATE OF CALIFORNIA OR ITS OFFICERS OR AGENTS SHALL NOT BE RESPONSIBLE FOR THE ACCURACY OR COMPLETENESS OF SCANNED COPIES OF THIS PLAN SHEET.

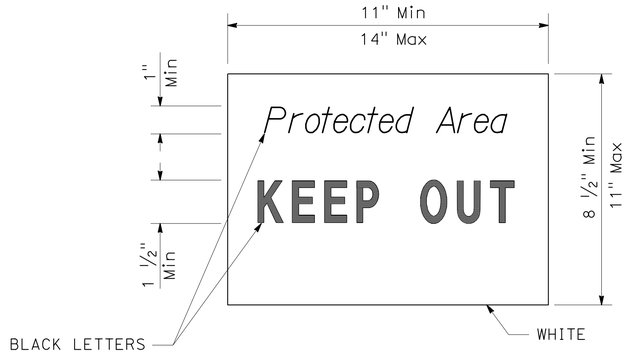

SIGN DETAIL

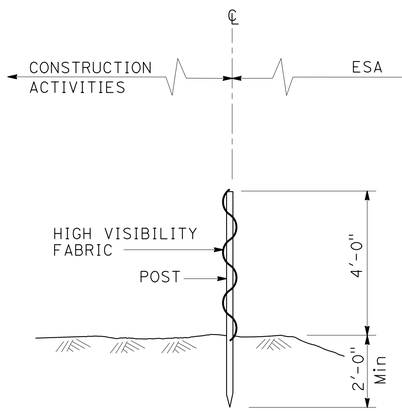

SECTION

TEMPORARY FENCE (TYPE ESA)

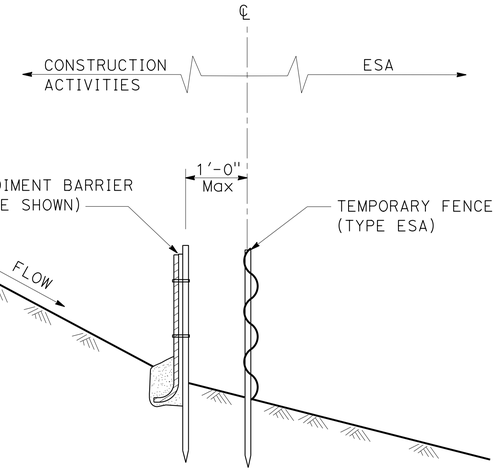

SECTION

PLACEMENT DETAIL FOR TEMPORARY LINEAR SEDIMENT BARRIER USED WITH TEMPORARY FENCE (TYPE ESA)

TEMPORARY WATER POLLUTION CONTROL DETAILS

TEMPORARY FENCE (TYPE ESA)

NO SCALE

WPCD-2

LAST REVISION: DATE PLOTTED => 18-MAR-2015
03-05-14 TIME PLOTTED => 15:08

STATE OF CALIFORNIA - DEPARTMENT OF TRANSPORTATION
Caltrans
NORTH REGION
DIVISION OF ENGINEERING

FUNCTIONAL SUPERVISOR: CARLOS A. PORTILLO

CALCULATED-DESIGNED BY: FERMIN BARRIGA

CHECKED BY: SALAHUDDIN CHOWDHURY

REVISED BY	DATE REVISED

BORDER LAST REVISED 7/2/2010

USERNAME => s130875
DGN FILE => 0300000224gc002.dgn

RELATIVE BORDER SCALE IS IN INCHES 0 1 2 3

UNIT 0305 | PROJECT NUMBER & PHASE 03000002241

Dist	COUNTY	ROUTE	POST MILES TOTAL PROJECT	SHEET No.	TOTAL SHEETS
03	ED	89	13.8/18.0	48	164

Fermin Barriga B. 6-9-14
REGISTERED CIVIL ENGINEER DATE

6-16-14
PLANS APPROVAL DATE

REGISTERED PROFESSIONAL ENGINEER
FERMIN BARRIGA
No. C47047
Exp. 12-31-15
CIVIL
STATE OF CALIFORNIA

THE STATE OF CALIFORNIA OR ITS OFFICERS OR AGENTS SHALL NOT BE RESPONSIBLE FOR THE ACCURACY OR COMPLETENESS OF SCANNED COPIES OF THIS PLAN SHEET.

TEMPORARY WATER POLLUTION CONTROL QUANTITIES

STATION	TEMPORARY FENCE (TYPE ESA)	TEMPORARY SILT FENCE	TEMPORARY REINFORCED SILT FENCE	TEMPORARY CHECK DAM	TEMPORARY DRAINAGE INLET PROTECTION	TEMPORARY FIBER ROLL	TEMPORARY COVER	TEMPORARY HYDRAULIC MULCH (BONDED FIBER MATRIX)	TEMPORARY GRAVEL BAG BERM
	LF	LF	LF	LF	EA	LF	SQYD	SQYD	LF
"A3" 177+15 TO 400+00	3,920	5,000	2,820	540	72	10,800	2,780	2,230	1,020

TEMPORARY WATER POLLUTION CONTROL QUANTITIES

STATION	RAIN EVENT ACTION PLAN	STORM WATER SAMPLING AND ANALYSIS DAY	STORM WATER ANNUAL REPORT	MOVE-IN/MOVE-OUT (TEMPORARY EROSION CONTROL)	WATER QUALITY ANNUAL REPORT	WATER QUALITY MONITORING REPORT	WATER QUALITY SAMPLING AND ANALYSIS DAY	TEMPORARY CONSTRUCTION ENTRANCE
	EA	EA	EA	EA	EA	EA	EA	EA
"A3" 177+15 TO 400+00	20	20	3	6	2	18	18	9

TEMPORARY WATER POLLUTION CONTROL QUANTITIES

WPCQ-1

REVISED BY | DATE REVISED
SALAHUDDIN CHOWDHURY | FERMIN BARRIGA
CALCULATED-DESIGNED BY | CHECKED BY
FUNCTIONAL SUPERVISOR: CARLOS A. PORTILLO

STATE OF CALIFORNIA - DEPARTMENT OF TRANSPORTATION
Caltrans
NORTH REGION
DIVISION OF ENGINEERING

LAST REVISION 05-28-14
DATE PLOTTED => 18-MAR-2015
TIME PLOTTED => 15:08

BORDER LAST REVISED 7/2/2010
USERNAME => s130875
DGN FILE => 0300000224gd001.dgn
RELATIVE BORDER SCALE IS IN INCHES 0 1 2 3
UNIT 0305
PROJECT NUMBER & PHASE 03000002241

Dist	COUNTY	ROUTE	POST MILES TOTAL PROJECT	SHEET No.	TOTAL SHEETS
03	ED	89	13.8/18.0	49	164

Fermin Barriga B. 6-9-14
REGISTERED CIVIL ENGINEER DATE

6-16-14
PLANS APPROVAL DATE

REGISTERED PROFESSIONAL ENGINEER
FERMIN BARRIGA
No. C47047
Exp. 12-31-15
CIVIL
STATE OF CALIFORNIA

THE STATE OF CALIFORNIA OR ITS OFFICERS OR AGENTS SHALL NOT BE RESPONSIBLE FOR THE ACCURACY OR COMPLETENESS OF SCANNED COPIES OF THIS PLAN SHEET.

NOTES:

1. FOR ACCURATE RIGHT OF WAY DATA, CONTACT RIGHT OF WAY ENGINEERING AT THE DISTRICT OFFICE.
2. ALL INLETS SHALL HAVE STANDARD GRATE DETAILS UNLESS OTHERWISE SHOWN.
3. LOCATIONS OF Exist FACILITIES SHOWN ON THESE PLANS ARE APPROXIMATE AND SHALL BE VERIFIED BY THE CONTRACTOR PRIOR TO CONSTRUCTION.
4. SEE DRAINAGE DETAILS SHEET DD-4 FOR MARKER (CULVERT) DETAILS AND THE DRAINAGE QUANTITIES SHEETS FOR MARKER (CULVERT) LOCATIONS.

LEGEND:

RSP

ABBREVIATIONS:

DOTE	DEPARTMENT OF TRANSPORTATION EASEMENT
DE	DRAINAGE EASEMENT
HE	HIGHWAY EASEMENT
TCE	TEMPORARY CONSTRUCTION EASEMENT
PTE	PERMIT TO ENTER
CIPP	CURED-IN-PLACE PIPELINER
AFEPAS	ALTERNATIVE FLARED END PIPE ARCH SECTION
PH #	POTHOLE NUMBER (SEE SHEET D-4)

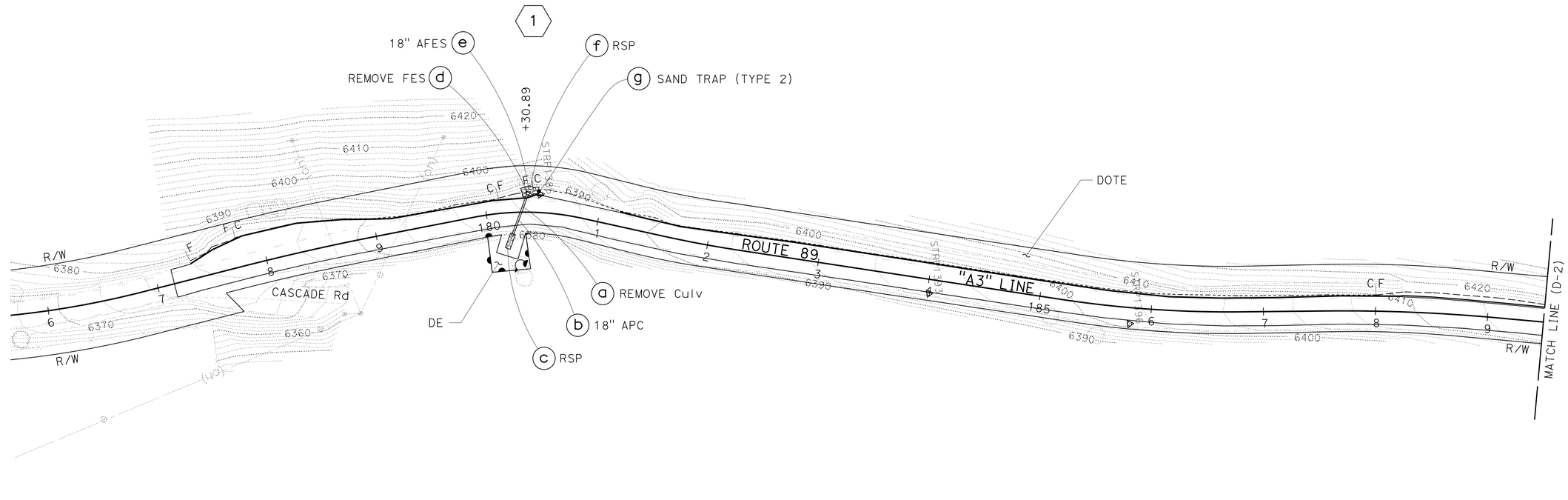

APPROVED FOR DRAINAGE WORK ONLY

DRAINAGE PLAN

SCALE: 1" = 50'

D-1

STATE OF CALIFORNIA - DEPARTMENT OF TRANSPORTATION
NORTH REGION
DIVISION OF ENGINEERING
Caltrans

FUNCTIONAL SUPERVISOR: CARLOS A. PORTILLO
CALCULATED-DESIGNED BY: JOSE LUIS VALDEZ
CHECKED BY: FERMIN BARRIGA

REVISED BY	DATE REVISED

LAST REVISION | DATE PLOTTED => 18-MAR-2015
06-04-14 | TIME PLOTTED => 15:08

BORDER LAST REVISED 7/2/2010 | USERNAME => s130875 | DGN FILE => 0300000224ia001.dgn | RELATIVE BORDER SCALE IS IN INCHES 0 1 2 3 | UNIT 0305 | PROJECT NUMBER & PHASE 03000002241

Dist	COUNTY	ROUTE	POST MILES TOTAL PROJECT	SHEET No.	TOTAL SHEETS
03	ED	89	13.8/18.0	50	164

Fermin Barriga B. 6-9-14
REGISTERED CIVIL ENGINEER DATE

6-16-14
PLANS APPROVAL DATE

REGISTERED PROFESSIONAL ENGINEER
FERMIN BARRIGA
No. C47047
Exp. 12-31-15
CIVIL
STATE OF CALIFORNIA

THE STATE OF CALIFORNIA OR ITS OFFICERS OR AGENTS SHALL NOT BE RESPONSIBLE FOR THE ACCURACY OR COMPLETENESS OF SCANNED COPIES OF THIS PLAN SHEET.

NOTES:

1. FOR ACCURATE RIGHT OF WAY DATA, CONTACT RIGHT OF WAY ENGINEERING AT THE DISTRICT OFFICE.
2. FOR ABBREVIATIONS AND LEGEND INFORMATION, SEE DRAINAGE PLAN SHEET D-1.
3. CONTRACTOR SHALL PROTECT IN PLACE Exist DRAINAGE INLET.

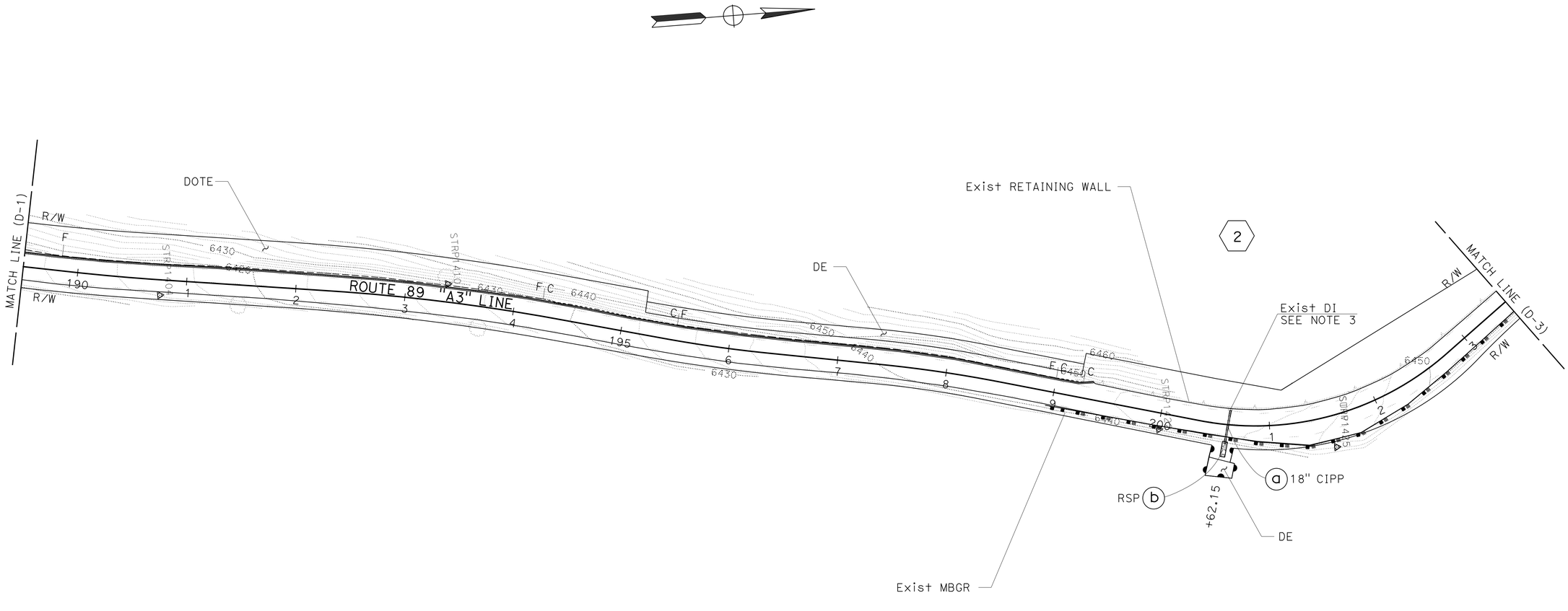

APPROVED FOR DRAINAGE WORK ONLY

DRAINAGE PLAN

SCALE: 1" = 50' **D-2**

STATE OF CALIFORNIA - DEPARTMENT OF TRANSPORTATION
Caltrans
NORTH REGION
DIVISION OF ENGINEERING

FUNCTIONAL SUPERVISOR: CARLOS A. PORTILLO
CALCULATED-DESIGNED BY: JOSE LUIS VALDEZ
CHECKED BY: FERMIN BARRIGA
REVISED BY
DATE REVISED

LAST REVISION
DATE PLOTTED => 18-MAR-2015
TIME PLOTTED => 15:08
04-11-14

BORDER LAST REVISED 7/2/2010
USERNAME => s130875
DGN FILE => 03000000224ia002.dgn
RELATIVE BORDER SCALE IS IN INCHES 0 1 2 3
UNIT 0305
PROJECT NUMBER & PHASE 03000002241

Dist	COUNTY	ROUTE	POST MILES TOTAL PROJECT	SHEET No.	TOTAL SHEETS
03	ED	89	13.8/18.0	51	164

Fermin Barriga B. 6-9-14
REGISTERED CIVIL ENGINEER DATE

FERMIN BARRIGA No. C47047 Exp. 12-31-15 CIVIL — REGISTERED PROFESSIONAL ENGINEER — STATE OF CALIFORNIA

6-16-14
PLANS APPROVAL DATE

THE STATE OF CALIFORNIA OR ITS OFFICERS OR AGENTS SHALL NOT BE RESPONSIBLE FOR THE ACCURACY OR COMPLETENESS OF SCANNED COPIES OF THIS PLAN SHEET.

NOTES:

1. FOR ACCURATE RIGHT OF WAY DATA, CONTACT RIGHT OF WAY ENGINEERING AT THE DISTRICT OFFICE.
2. FOR ABBREVIATIONS AND LEGEND INFORMATION, SEE DRAINAGE PLAN SHEET D-1.
3. CONTRACTOR SHALL PROTECT IN PLACE Exist DRAINAGE INLET.
4. FOR ADDITIONAL SETTLING BASIN INFORMATION, SEE DRAINAGE DETAILS SHEETS DD-3 AND DD-8 AND DRAINAGE PROFILES SHEET DP-4.

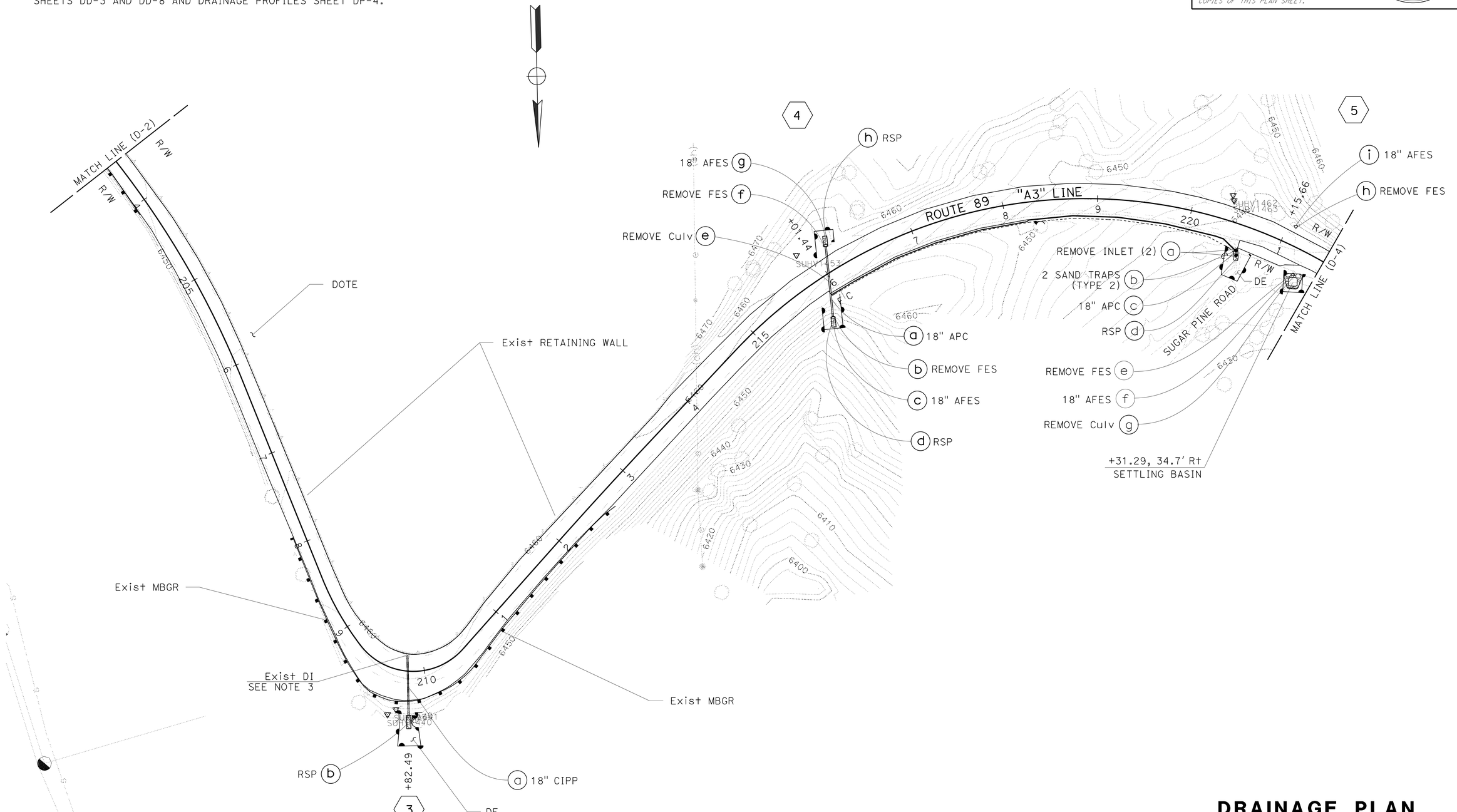

APPROVED FOR DRAINAGE WORK ONLY

DRAINAGE PLAN

SCALE: 1" = 50' **D-3**

REVISED BY | DATE REVISED
JOSE LUIS VALDEZ | FERMIN BARRIGA
CALCULATED-DESIGNED BY | CHECKED BY
FUNCTIONAL SUPERVISOR: CARLOS A. PORTILLO
STATE OF CALIFORNIA - DEPARTMENT OF TRANSPORTATION
NORTH REGION
DIVISION OF ENGINEERING
Caltrans

LAST REVISION | DATE PLOTTED => 18-MAR-2015
05-22-14 | TIME PLOTTED => 15:08

BORDER LAST REVISED 7/2/2010 | USERNAME => s130875 | DGN FILE => 0300000224ia003.dgn | RELATIVE BORDER SCALE IS IN INCHES 0 1 2 3 | UNIT 0305 | PROJECT NUMBER & PHASE 03000002241

Dist	COUNTY	ROUTE	POST MILES TOTAL PROJECT	SHEET No.	TOTAL SHEETS
03	ED	89	13.8/18.0	52	164

Fermin Barriga B. 6-9-14
REGISTERED CIVIL ENGINEER DATE

6-16-14
PLANS APPROVAL DATE

REGISTERED PROFESSIONAL ENGINEER
FERMIN BARRIGA
No. C47047
Exp. 12-31-15
CIVIL
STATE OF CALIFORNIA

THE STATE OF CALIFORNIA OR ITS OFFICERS OR AGENTS SHALL NOT BE RESPONSIBLE FOR THE ACCURACY OR COMPLETENESS OF SCANNED COPIES OF THIS PLAN SHEET.

NOTES:

1. FOR ACCURATE RIGHT OF WAY DATA, CONTACT RIGHT OF WAY ENGINEERING AT THE DISTRICT OFFICE.
2. FOR ABBREVIATIONS AND LEGEND INFORMATION, SEE DRAINAGE PLAN SHEET D-1.
3. Approx LOCATION OF Exist 6" AND 8" WATER LINES. CONTRACTOR SHALL PROTECT IN PLACE Exist 6" AND 8" WATER LINES.
4. FOR ADDITIONAL SETTLING BASIN INFORMATION, SEE DRAINAGE DETAILS SHEETS DD-3, DD-8 AND DD-9 AND DRAINAGE PROFILES SHEETS DP-6 AND DP-7.
5. FOR ADDITIONAL RSP (NO.3, METHOD B) INFORMATION, SEE LAYOUT SHEET L-4 AND TYPICAL CROSS SECTIONS SHEET X-2.

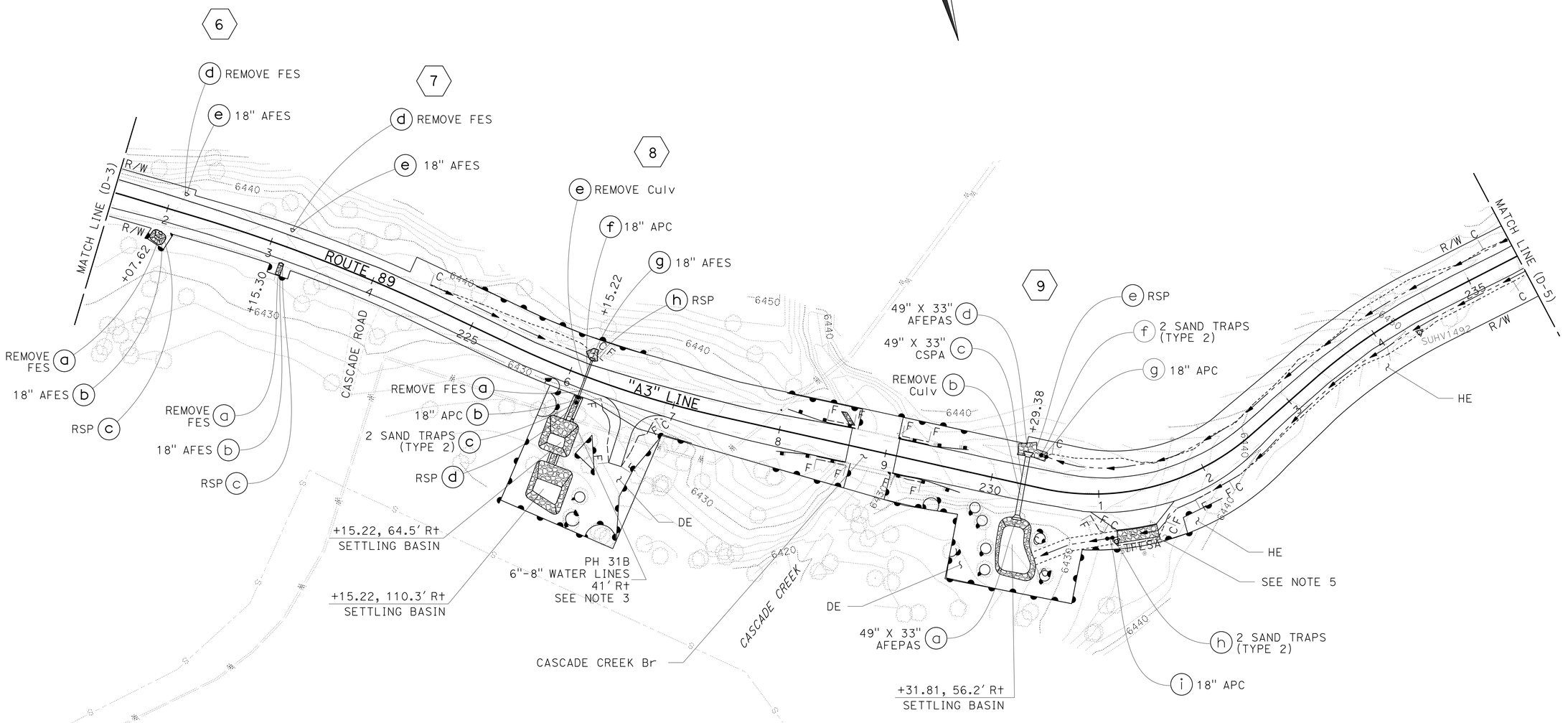

APPROVED FOR DRAINAGE WORK ONLY

DRAINAGE PLAN

SCALE: 1" = 50' **D-4**

STATE OF CALIFORNIA - DEPARTMENT OF TRANSPORTATION
NORTH REGION
DIVISION OF ENGINEERING
FUNCTIONAL SUPERVISOR: CARLOS A. PORTILLO
CALCULATED-DESIGNED BY: JOSE LUIS VALDEZ
CHECKED BY: FERMIN BARRIGA
REVISED BY / DATE REVISED

LAST REVISION DATE PLOTTED => 18-MAR-2015
TIME PLOTTED => 15:08

BORDER LAST REVISED 7/2/2010
USERNAME => s130875
DGN FILE => 03000000224ia004.dgn
RELATIVE BORDER SCALE IS IN INCHES 0 1 2 3
UNIT 0305
PROJECT NUMBER & PHASE 03000002241

Dist	COUNTY	ROUTE	POST MILES TOTAL PROJECT	SHEET No.	TOTAL SHEETS
03	ED	89	13.8/18.0	53	164

REGISTERED CIVIL ENGINEER 6-9-14 DATE

6-16-14
PLANS APPROVAL DATE

REGISTERED PROFESSIONAL ENGINEER
FERMIN BARRIGA
No. C47047
Exp. 12-31-15
CIVIL
STATE OF CALIFORNIA

THE STATE OF CALIFORNIA OR ITS OFFICERS OR AGENTS SHALL NOT BE RESPONSIBLE FOR THE ACCURACY OR COMPLETENESS OF SCANNED COPIES OF THIS PLAN SHEET.

NOTES:

1. FOR ACCURATE RIGHT OF WAY DATA, CONTACT RIGHT OF WAY ENGINEERING AT THE DISTRICT OFFICE.
2. FOR ABBREVIATIONS AND LEGEND INFORMATION, SEE DRAINAGE PLAN SHEET D-1.

APPROVED FOR DRAINAGE WORK ONLY

DRAINAGE PLAN

SCALE: 1" = 50'

D-5

STATE OF CALIFORNIA - DEPARTMENT OF TRANSPORTATION
Caltrans
NORTH REGION
DIVISION OF ENGINEERING

FUNCTIONAL SUPERVISOR	CALCULATED-DESIGNED BY	CHECKED BY	REVISED BY	DATE REVISED
CARLOS A. PORTILLO	JOSE LUIS VALDEZ	FERMIN BARRIGA		

BORDER LAST REVISED 7/2/2010

USERNAME => s130875
DGN FILE => 0300000224ia005.dgn

RELATIVE BORDER SCALE IS IN INCHES 0 1 2 3

UNIT 0305

PROJECT NUMBER & PHASE 03000002241

LAST REVISION 04-10-14
DATE PLOTTED => 18-MAR-2015
TIME PLOTTED => 15:08

Dist	COUNTY	ROUTE	POST MILES TOTAL PROJECT	SHEET No.	TOTAL SHEETS
03	ED	89	13.8/18.0	54	164

Fermin Barriga B. 6-9-14
REGISTERED CIVIL ENGINEER DATE

6-16-14
PLANS APPROVAL DATE

REGISTERED PROFESSIONAL ENGINEER
FERMIN BARRIGA
No. C47047
Exp. 12-31-15
CIVIL
STATE OF CALIFORNIA

THE STATE OF CALIFORNIA OR ITS OFFICERS OR AGENTS SHALL NOT BE RESPONSIBLE FOR THE ACCURACY OR COMPLETENESS OF SCANNED COPIES OF THIS PLAN SHEET.

NOTES:

1. FOR ACCURATE RIGHT OF WAY DATA, CONTACT RIGHT OF WAY ENGINEERING AT THE DISTRICT OFFICE.
2. FOR ABBREVIATIONS AND LEGEND INFORMATION, SEE DRAINAGE PLAN SHEET D-1.
3. FOR CONCRETE BACKFILL (PIPE TRENCH) DETAILS, SEE DRAINAGE DETAILS SHEET DD-3.
4. FOR ADDITIONAL Mod HMA OVERSIDE DRAIN INFORMATION, SEE LAYOUT SHEET L-6 AND CONSTRUCTION DETAILS SHEET C-24.
5. CONTRACTOR SHALL PROTECT IN PLACE Exist DRAINAGE INLET.
6. FOR ADDITIONAL RSP (FACING, METHOD B) INFORMATION, SEE LAYOUT SHEET L-6 AND CONSTRUCTION DETAILS SHEET C-23.
7. FOR PCC APRON DETAILS, SEE DRAINAGE DETAILS SHEET DD-6.

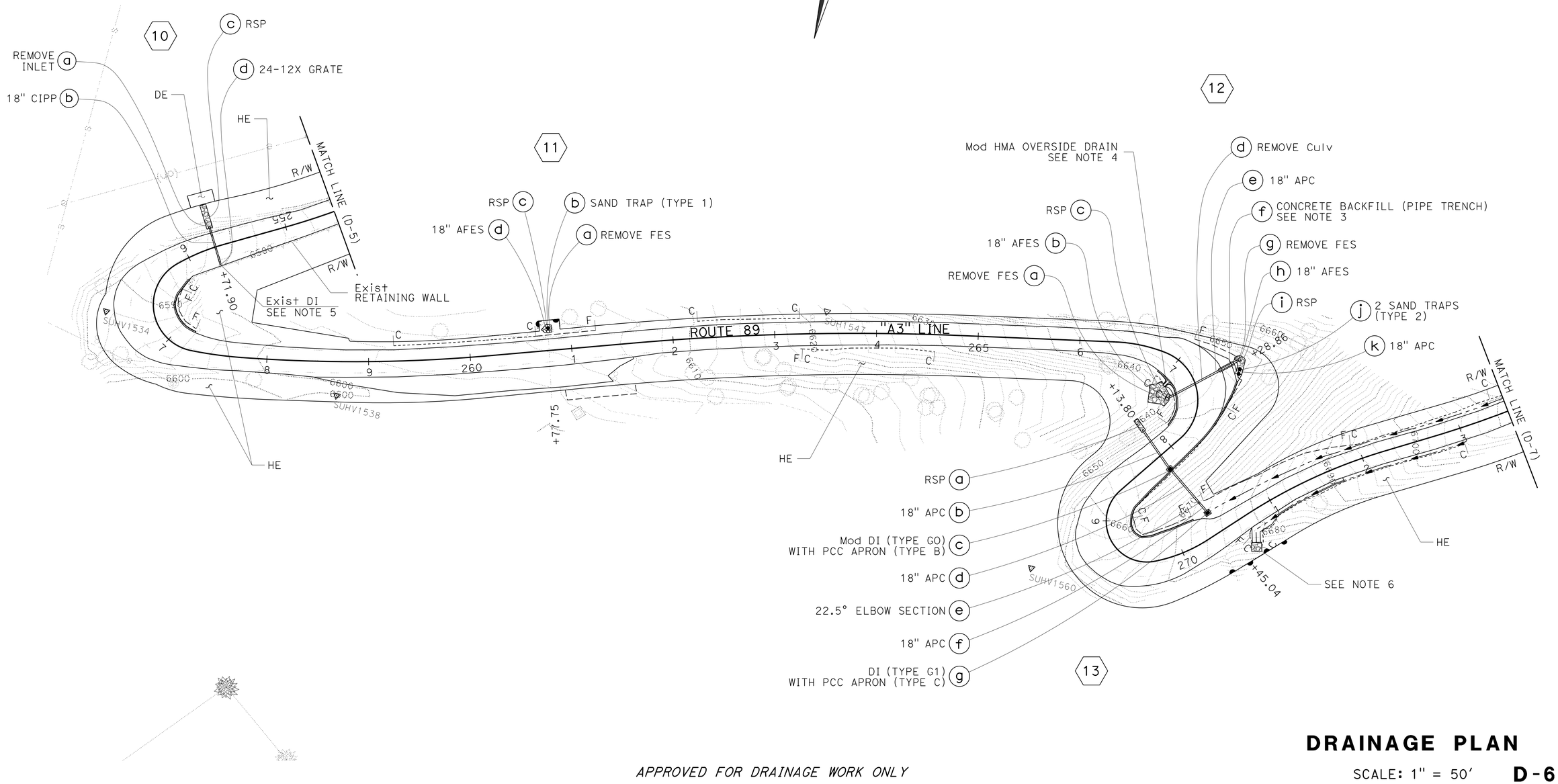

APPROVED FOR DRAINAGE WORK ONLY

DRAINAGE PLAN

SCALE: 1" = 50' **D-6**

STATE OF CALIFORNIA - DEPARTMENT OF TRANSPORTATION
NORTH REGION
DIVISION OF ENGINEERING
Caltrans

REVISED BY	DATE REVISED

CALCULATED-DESIGNED BY: JOSE LUIS VALDEZ
CHECKED BY: FERMIN BARRIGA
FUNCTIONAL SUPERVISOR: CARLOS A. PORTILLO

LAST REVISION DATE PLOTTED => 18-MAR-2015
05-14-14 TIME PLOTTED => 15:08

BORDER LAST REVISED 7/2/2010 | USERNAME => s130875 | DGN FILE => 0300000224ia006.dgn | RELATIVE BORDER SCALE IS IN INCHES 0 1 2 3 | UNIT 0305 | PROJECT NUMBER & PHASE 03000002241

Dist	COUNTY	ROUTE	POST MILES TOTAL PROJECT	SHEET No.	TOTAL SHEETS
03	ED	89	13.8/18.0	55	164

Fermin Barriga B. 6-9-14
REGISTERED CIVIL ENGINEER DATE

6-16-14
PLANS APPROVAL DATE

REGISTERED PROFESSIONAL ENGINEER
FERMIN BARRIGA
No. C47047
Exp. 12-31-15
CIVIL
STATE OF CALIFORNIA

THE STATE OF CALIFORNIA OR ITS OFFICERS OR AGENTS SHALL NOT BE RESPONSIBLE FOR THE ACCURACY OR COMPLETENESS OF SCANNED COPIES OF THIS PLAN SHEET.

NOTES:

1. FOR ACCURATE RIGHT OF WAY DATA, CONTACT RIGHT OF WAY ENGINEERING AT THE DISTRICT OFFICE.
2. FOR ABBREVIATIONS AND LEGEND INFORMATION, SEE DRAINAGE PLAN SHEET D-1.

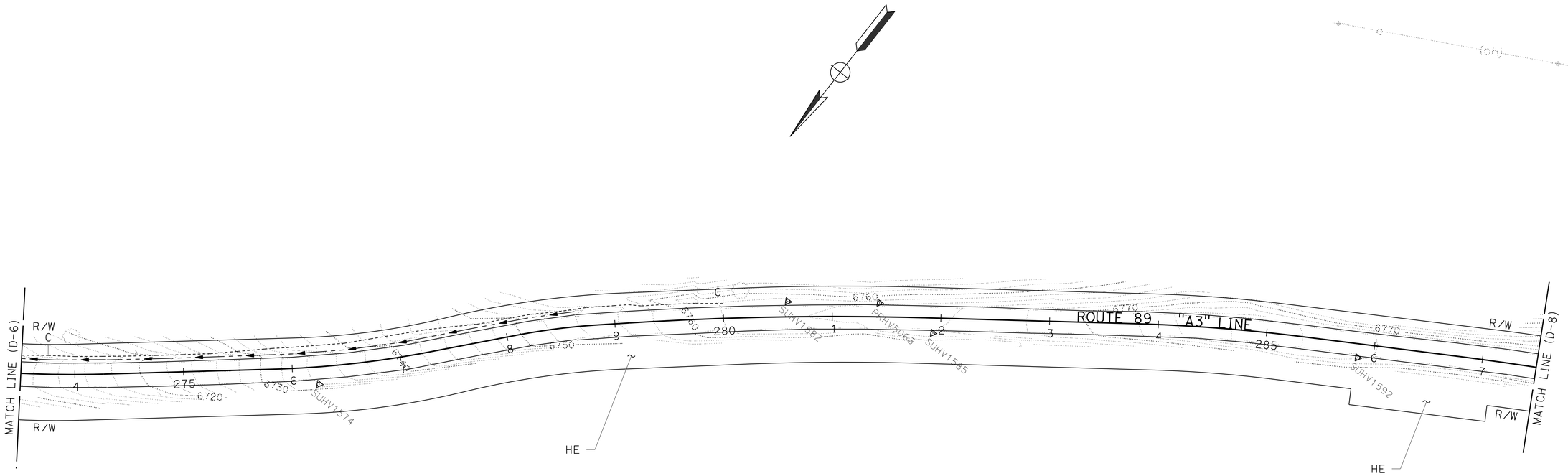

APPROVED FOR DRAINAGE WORK ONLY

DRAINAGE PLAN

SCALE: 1" = 50' **D-7**

STATE OF CALIFORNIA - DEPARTMENT OF TRANSPORTATION
NORTH REGION
DIVISION OF ENGINEERING
Caltrans

FUNCTIONAL SUPERVISOR: CARLOS A. PORTILLO

CALCULATED-DESIGNED BY: JOSE LUIS VALDEZ
CHECKED BY: FERMIN BARRIGA

REVISED BY | DATE REVISED

LAST REVISION | DATE PLOTTED => 18-MAR-2015
03-04-14 | TIME PLOTTED => 15:08

BORDER LAST REVISED 7/2/2010 | USERNAME => s130875 | DGN FILE => 0300000224ia007.dgn | RELATIVE BORDER SCALE IS IN INCHES 0 1 2 3 | UNIT 0305 | PROJECT NUMBER & PHASE 03000002241

Dist	COUNTY	ROUTE	POST MILES TOTAL PROJECT	SHEET No.	TOTAL SHEETS
03	ED	89	13.8/18.0	56	164

Fermin Barriga B. 6-9-14
REGISTERED CIVIL ENGINEER DATE

6-16-14
PLANS APPROVAL DATE

REGISTERED PROFESSIONAL ENGINEER
FERMIN BARRIGA
No. C47047
Exp. 12-31-15
CIVIL
STATE OF CALIFORNIA

THE STATE OF CALIFORNIA OR ITS OFFICERS OR AGENTS SHALL NOT BE RESPONSIBLE FOR THE ACCURACY OR COMPLETENESS OF SCANNED COPIES OF THIS PLAN SHEET.

NOTES:

1. FOR ACCURATE RIGHT OF WAY DATA, CONTACT RIGHT OF WAY ENGINEERING AT THE DISTRICT OFFICE.
2. FOR ABBREVIATIONS AND LEGEND INFORMATION, SEE DRAINAGE PLAN SHEET D-1.
3. SEE DRAINAGE PROFILES SHEET DP-12 FOR APPROXIMATE LOCATION OF EXISTING BOULDERS.
4. CONTRACTOR SHALL PROTECT IN PLACE Exist DRAINAGE INLETS.

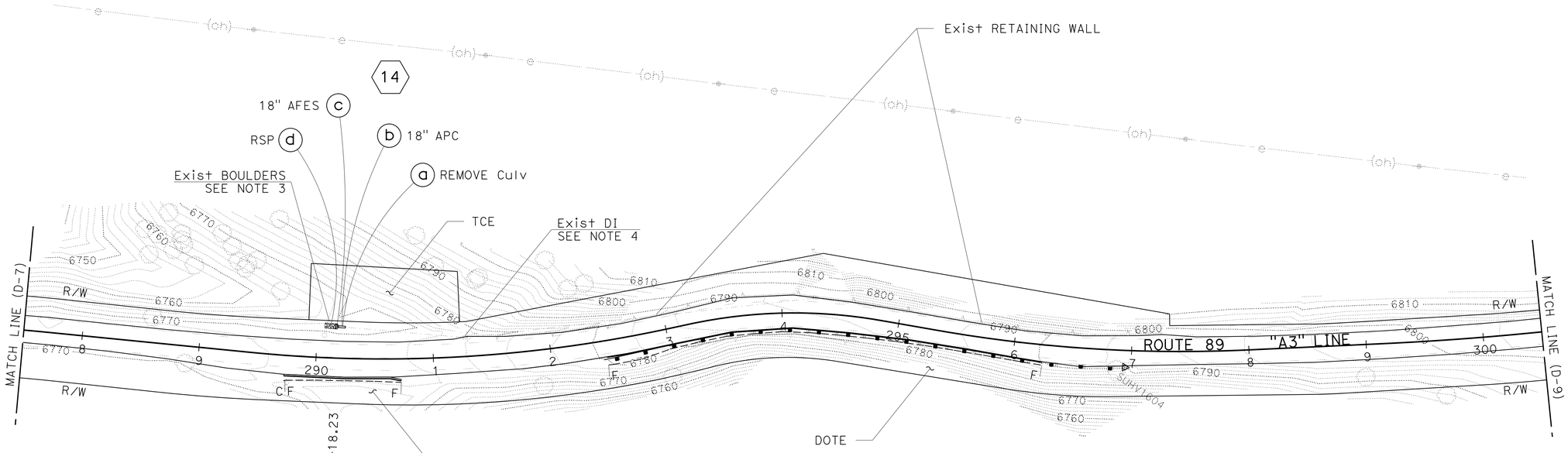

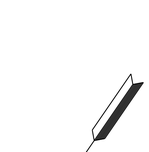

APPROVED FOR DRAINAGE WORK ONLY

DRAINAGE PLAN

SCALE: 1" = 50' **D-8**

STATE OF CALIFORNIA - DEPARTMENT OF TRANSPORTATION
NORTH REGION
DIVISION OF ENGINEERING
Caltrans

FUNCTIONAL SUPERVISOR: CARLOS A. PORTILLO

CALCULATED-DESIGNED BY: JOSE LUIS VALDEZ
CHECKED BY: FERMIN BARRIGA

REVISED BY | DATE REVISED

LAST REVISION | DATE PLOTTED => 18-MAR-2015
06-05-14 | TIME PLOTTED => 15:08

BORDER LAST REVISED 7/2/2010

USERNAME => s130875
DGN FILE => 0300000224ia008.dgn

RELATIVE BORDER SCALE IS IN INCHES 0 1 2 3

UNIT 0305

PROJECT NUMBER & PHASE 03000002241

Dist	COUNTY	ROUTE	POST MILES TOTAL PROJECT	SHEET No.	TOTAL SHEETS
03	ED	89	13.8/18.0	57	164

Fermin Barriga B. 6-9-14
REGISTERED CIVIL ENGINEER DATE

6-16-14
PLANS APPROVAL DATE

REGISTERED PROFESSIONAL ENGINEER
FERMIN BARRIGA
No. C47047
Exp. 12-31-15
CIVIL
STATE OF CALIFORNIA

THE STATE OF CALIFORNIA OR ITS OFFICERS OR AGENTS SHALL NOT BE RESPONSIBLE FOR THE ACCURACY OR COMPLETENESS OF SCANNED COPIES OF THIS PLAN SHEET.

NOTES:

1. FOR ACCURATE RIGHT OF WAY DATA, CONTACT RIGHT OF WAY ENGINEERING AT THE DISTRICT OFFICE.
2. FOR ABBREVIATIONS AND LEGEND INFORMATION, SEE DRAINAGE PLAN SHEET D-1.

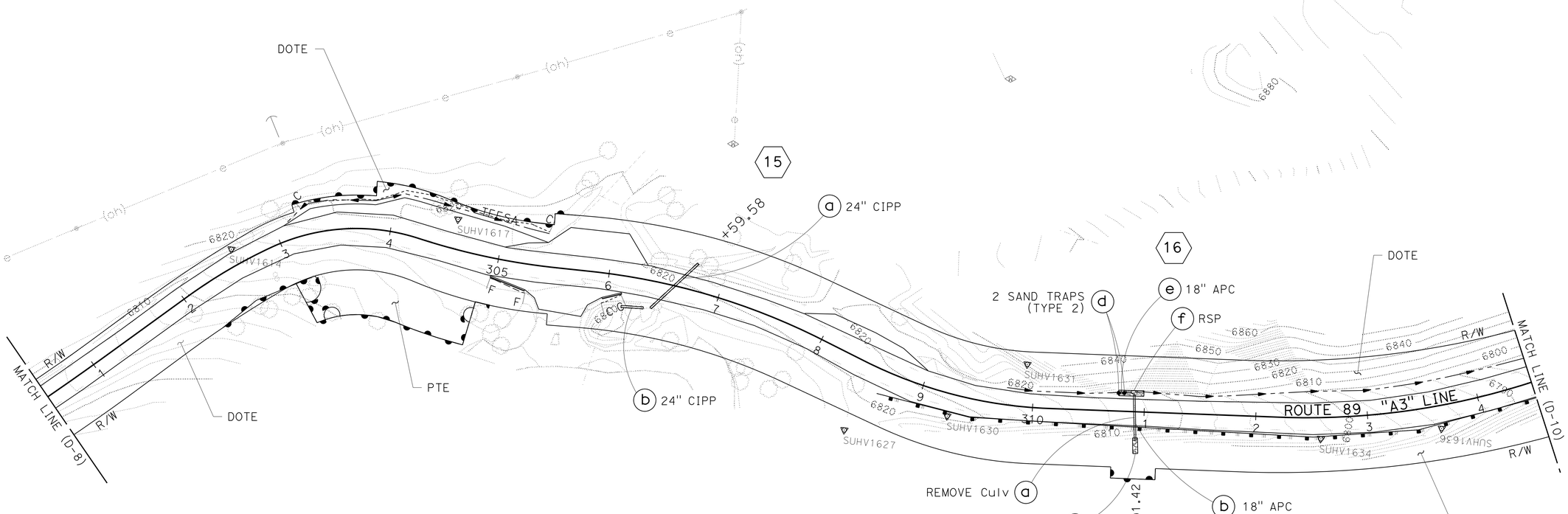

APPROVED FOR DRAINAGE WORK ONLY

DRAINAGE PLAN

SCALE: 1" = 50' **D-9**

STATE OF CALIFORNIA - DEPARTMENT OF TRANSPORTATION
NORTH REGION
DIVISION OF ENGINEERING
FUNCTIONAL SUPERVISOR: CARLOS A. PORTILLO
CALCULATED-DESIGNED BY: JOSE LUIS VALDEZ
CHECKED BY: FERMIN BARRIGA
REVISED BY
DATE REVISED

LAST REVISION: DATE PLOTTED => 18-MAR-2015
04-29-14 TIME PLOTTED => 15:08

BORDER LAST REVISED 7/2/2010
USERNAME => s130875
DGN FILE => 03000000224ia009.dgn
RELATIVE BORDER SCALE IS IN INCHES 0 1 2 3
UNIT 0305
PROJECT NUMBER & PHASE 03000002241

Dist	COUNTY	ROUTE	POST MILES TOTAL PROJECT	SHEET No.	TOTAL SHEETS
03	ED	89	13.8/18.0	58	164

Fermin Barriga B. 6-9-14
REGISTERED CIVIL ENGINEER DATE

6-16-14
PLANS APPROVAL DATE

REGISTERED PROFESSIONAL ENGINEER
FERMIN BARRIGA
No. C47047
Exp. 12-31-15
CIVIL
STATE OF CALIFORNIA

THE STATE OF CALIFORNIA OR ITS OFFICERS OR AGENTS SHALL NOT BE RESPONSIBLE FOR THE ACCURACY OR COMPLETENESS OF SCANNED COPIES OF THIS PLAN SHEET.

NOTES:

1. FOR ACCURATE RIGHT OF WAY DATA, CONTACT RIGHT OF WAY ENGINEERING AT THE DISTRICT OFFICE.
2. FOR ABBREVIATIONS AND LEGEND INFORMATION, SEE DRAINAGE PLAN SHEET D-1.
3. CONTRACTOR SHALL PROTECT IN PLACE Exist DRAINAGE INLET.
4. FOR ADDITIONAL Mod HMA OVERSIDE DRAIN INFORMATION, SEE LAYOUT SHEET L-10 AND CONSTRUCTION DETAILS SHEET C-24.
5. FOR ADDITIONAL RSP (FACING, METHOD B) INFORMATION, SEE LAYOUT SHEET L-10 AND CONSTRUCTION DETAILS SHEET C-22.
6. FOR PCC APRON DETAILS, SEE DRAINAGE DETAILS SHEET DD-6.

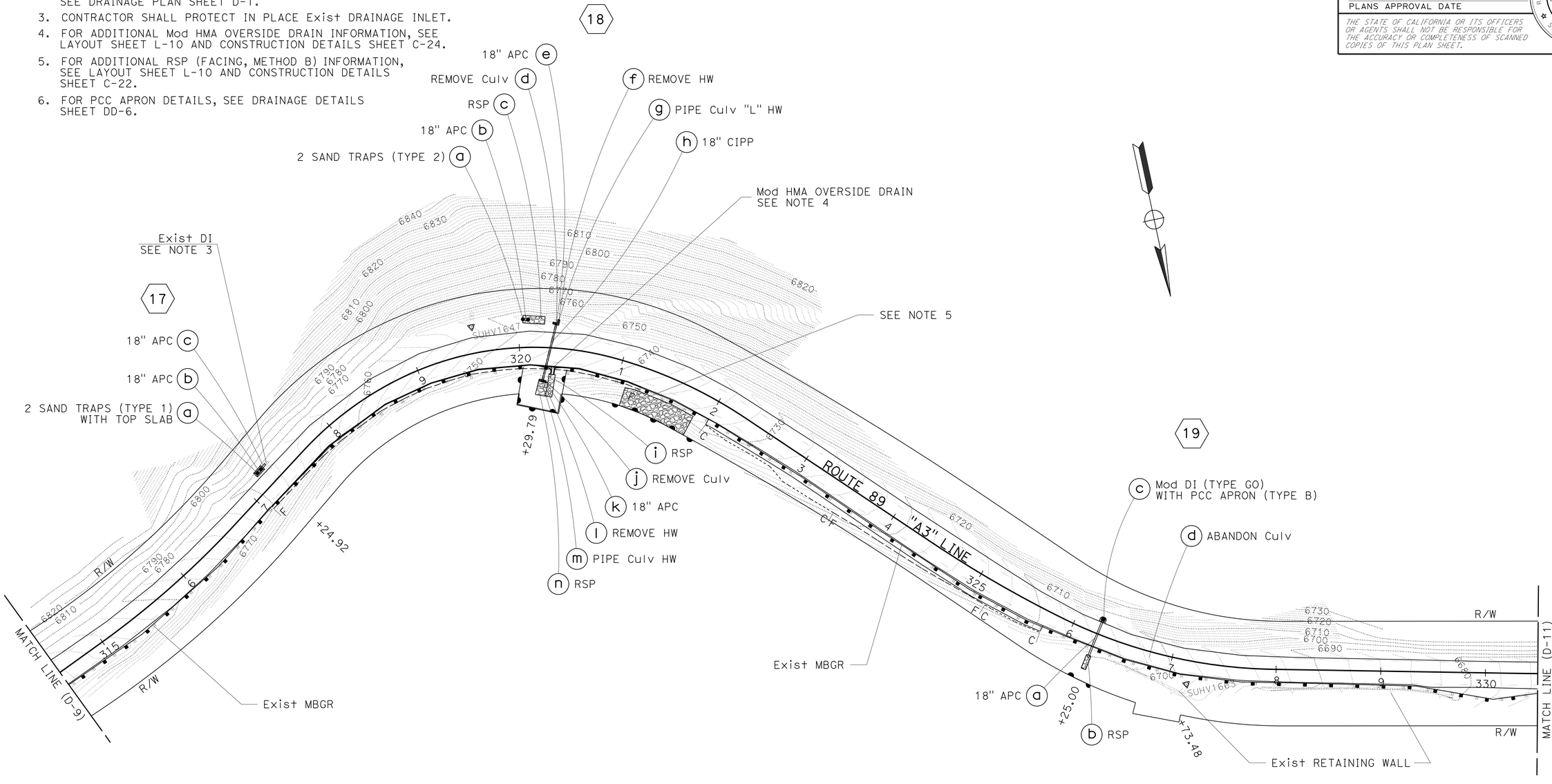

APPROVED FOR DRAINAGE WORK ONLY

DRAINAGE PLAN

SCALE: 1" = 50' **D-10**

STATE OF CALIFORNIA - DEPARTMENT OF TRANSPORTATION
NORTH REGION
DIVISION OF ENGINEERING
Caltrans

FUNCTIONAL SUPERVISOR: CARLOS A. PORTILLO
CALCULATED-DESIGNED BY: JOSE LUIS VALDEZ
CHECKED BY: FERMIN BARRIGA
REVISED BY | DATE REVISED

LAST REVISION | DATE PLOTTED => 18-MAR-2015
05-14-14 | TIME PLOTTED => 15:08

BORDER LAST REVISED 7/2/2010
USERNAME => s130875
DGN FILE => 0300000224ia010.dgn
RELATIVE BORDER SCALE IS IN INCHES 0 1 2 3
UNIT 0305
PROJECT NUMBER & PHASE 03000002241

Dist	COUNTY	ROUTE	POST MILES TOTAL PROJECT	SHEET No.	TOTAL SHEETS
03	ED	89	13.8/18.0	59	164

Fermin Barriga B. 6-9-14
REGISTERED CIVIL ENGINEER DATE

FERMIN BARRIGA No. C47046 Exp. 12-31-15 CIVIL — REGISTERED PROFESSIONAL ENGINEER — STATE OF CALIFORNIA

6-16-14
PLANS APPROVAL DATE

THE STATE OF CALIFORNIA OR ITS OFFICERS OR AGENTS SHALL NOT BE RESPONSIBLE FOR THE ACCURACY OR COMPLETENESS OF SCANNED COPIES OF THIS PLAN SHEET.

NOTES:

1. FOR ACCURATE RIGHT OF WAY DATA, CONTACT RIGHT OF WAY ENGINEERING AT THE DISTRICT OFFICE.
2. FOR ABBREVIATIONS AND LEGEND INFORMATION, SEE DRAINAGE PLAN SHEET D-1.
3. CONTRACTOR SHALL PROTECT IN PLACE Exist DRAINAGE INLETS.

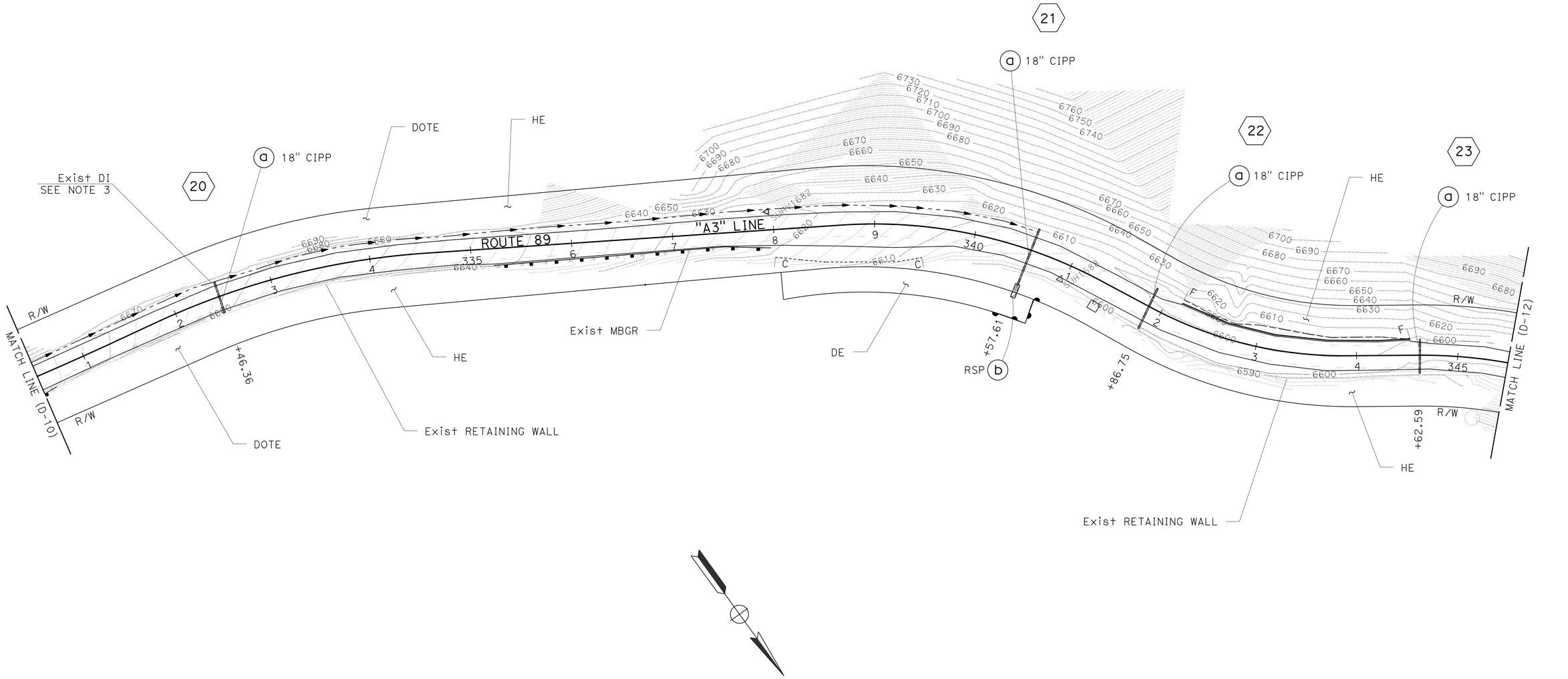

APPROVED FOR DRAINAGE WORK ONLY

DRAINAGE PLAN

SCALE: 1" = 50' **D-11**

LAST REVISION | DATE PLOTTED => 18-MAR-2015
04-11-14 | TIME PLOTTED => 15:08

STATE OF CALIFORNIA - DEPARTMENT OF TRANSPORTATION
Caltrans
NORTH REGION
DIVISION OF ENGINEERING

FUNCTIONAL SUPERVISOR: CARLOS A. PORTILLO
CALCULATED-DESIGNED BY: JOSE LUIS VALDEZ
CHECKED BY: FERMIN BARRIGA
REVISED BY | DATE REVISED

BORDER LAST REVISED 7/2/2010

USERNAME => s130875
DGN FILE => 0300000224ia011.dgn

RELATIVE BORDER SCALE IS IN INCHES 0 1 2 3

UNIT 0305

PROJECT NUMBER & PHASE 03000002241

Dist	COUNTY	ROUTE	POST MILES TOTAL PROJECT	SHEET No.	TOTAL SHEETS
03	ED	89	13.8/18.0	60	164

Fermin Barriga B. 6-9-14
REGISTERED CIVIL ENGINEER DATE

6-16-14
PLANS APPROVAL DATE

FERMIN BARRIGA No. C47047 Exp. 12-31-15 CIVIL — REGISTERED PROFESSIONAL ENGINEER — STATE OF CALIFORNIA

THE STATE OF CALIFORNIA OR ITS OFFICERS OR AGENTS SHALL NOT BE RESPONSIBLE FOR THE ACCURACY OR COMPLETENESS OF SCANNED COPIES OF THIS PLAN SHEET.

NOTES:

1. FOR ACCURATE RIGHT OF WAY DATA, CONTACT RIGHT OF WAY ENGINEERING AT THE DISTRICT OFFICE.
2. FOR ABBREVIATIONS AND LEGEND INFORMATION, SEE DRAINAGE PLAN SHEET D-1.
3. FOR CONCRETE BACKFILL (PIPE TRENCH) DETAILS, SEE DRAINAGE DETAILS SHEET DD-3.
4. FOR PCC APRON DETAILS, SEE DRAINAGE DETAILS SHEETS DD-6 AND DD-7.
5. CONTRACTOR SHALL PROTECT IN PLACE Exist DRAINAGE INLET.

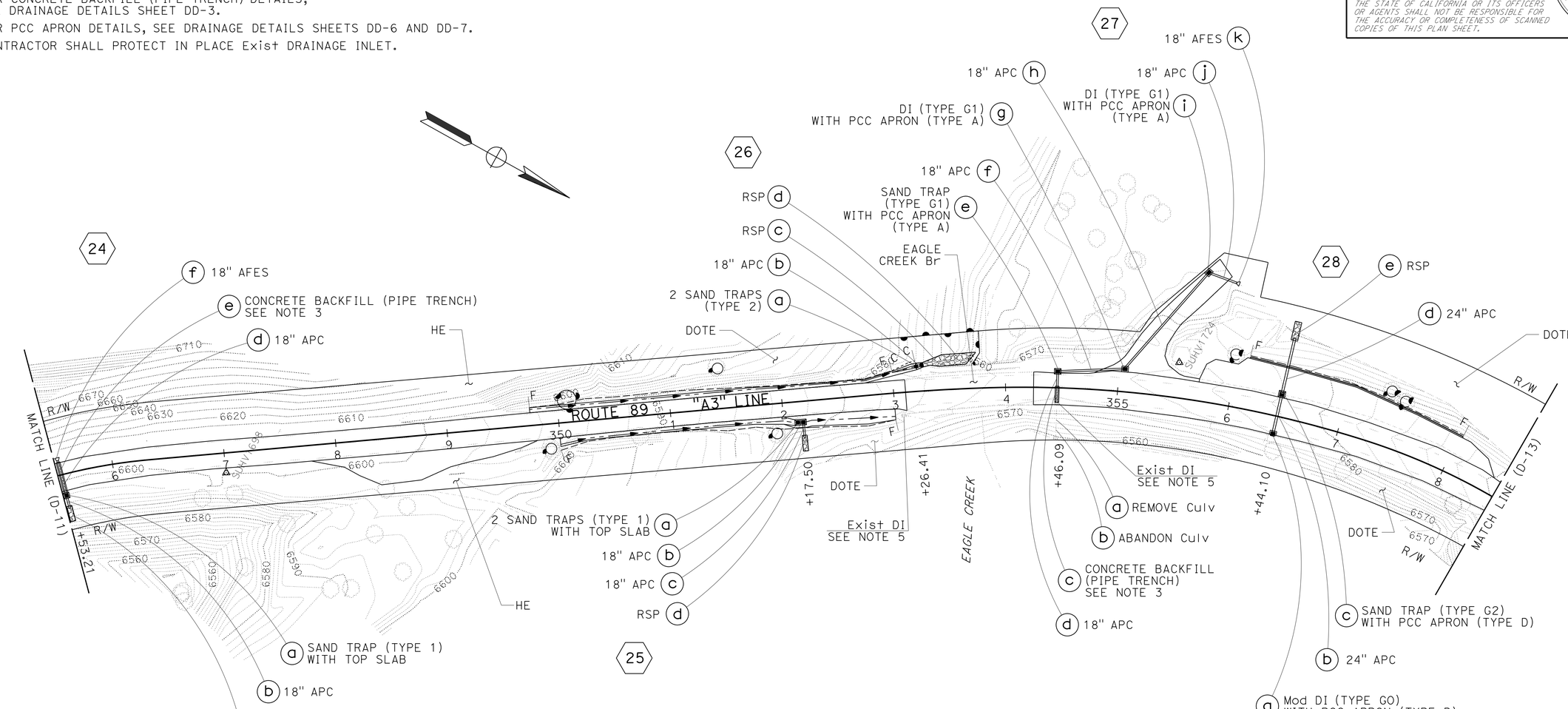

APPROVED FOR DRAINAGE WORK ONLY

DRAINAGE PLAN

SCALE: 1" = 50' **D-12**

STATE OF CALIFORNIA - DEPARTMENT OF TRANSPORTATION
NORTH REGION DIVISION OF ENGINEERING
Caltrans
FUNCTIONAL SUPERVISOR: CARLOS A. PORTILLO
CALCULATED-DESIGNED BY: FERMIN BARRIGA
CHECKED BY: JOSE LUIS VALDEZ
REVISED BY / DATE REVISED:
LAST REVISION: DATE PLOTTED => 18-MAR-2015 TIME PLOTTED => 15:08
06-02-14

BORDER LAST REVISED 7/2/2010 | USERNAME => s130875 DGN FILE => 0300000224ia012.dgn | RELATIVE BORDER SCALE IS IN INCHES 0 1 2 3 | UNIT 0305 | PROJECT NUMBER & PHASE 03000002241

Dist	COUNTY	ROUTE	POST MILES TOTAL PROJECT	SHEET No.	TOTAL SHEETS
03	ED	89	13.8/18.0	61	164

Fermin Barriga B. 6-9-14
REGISTERED CIVIL ENGINEER DATE

6-16-14
PLANS APPROVAL DATE

REGISTERED PROFESSIONAL ENGINEER
FERMIN BARRIGA
No. C47047
Exp. 12-31-15
CIVIL
STATE OF CALIFORNIA

THE STATE OF CALIFORNIA OR ITS OFFICERS OR AGENTS SHALL NOT BE RESPONSIBLE FOR THE ACCURACY OR COMPLETENESS OF SCANNED COPIES OF THIS PLAN SHEET.

NOTES:

1. FOR ACCURATE RIGHT OF WAY DATA, CONTACT RIGHT OF WAY ENGINEERING AT THE DISTRICT OFFICE.
2. FOR ABBREVIATIONS AND LEGEND INFORMATION, SEE DRAINAGE PLAN SHEET D-1.
3. FOR CONCRETED-RSP (FACING, METHOD A) DETAILS, SEE DRAINAGE DETAILS SHEET DD-5.

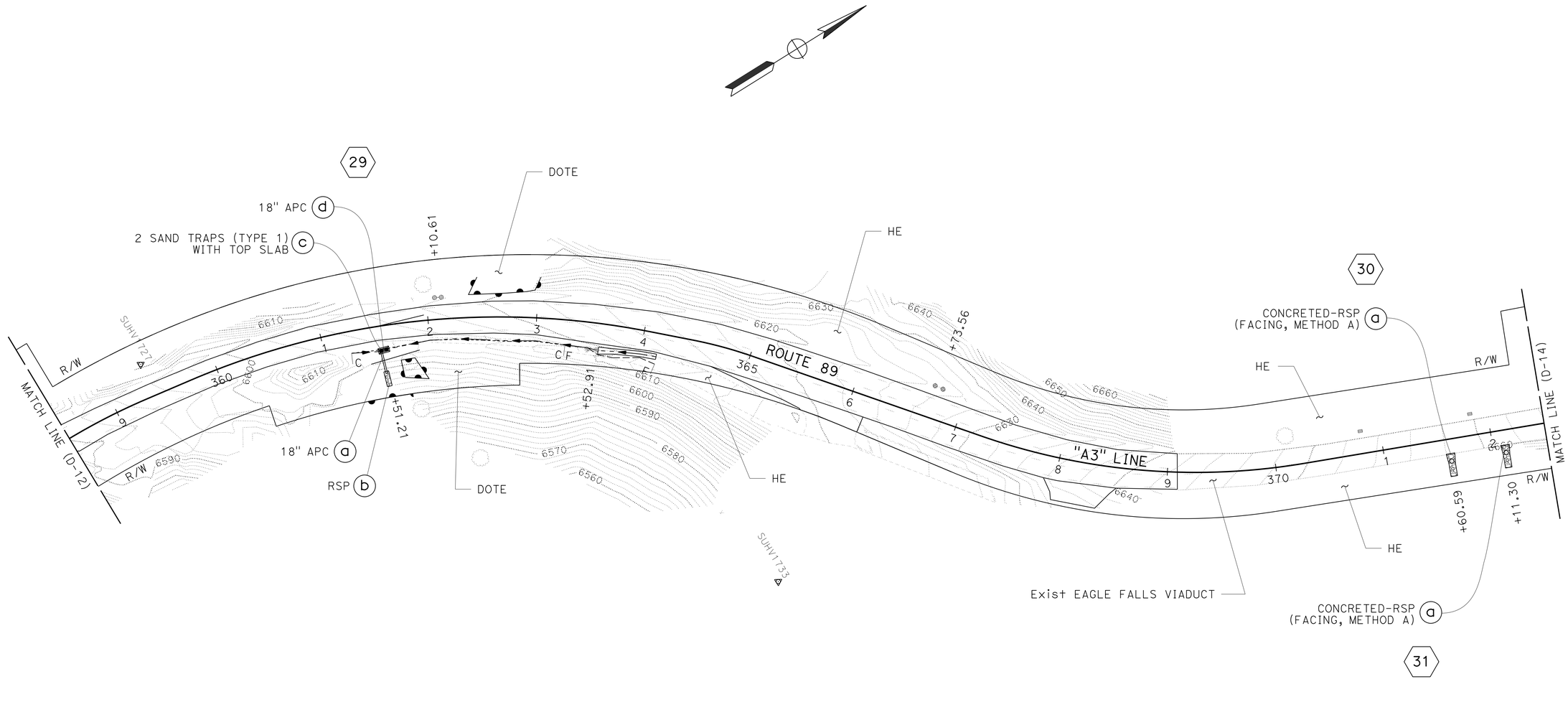

APPROVED FOR DRAINAGE WORK ONLY

DRAINAGE PLAN

SCALE: 1" = 50′ **D-13**

CALCULATED-DESIGNED BY: JOSE LUIS VALDEZ
CHECKED BY: FERMIN BARRIGA
REVISED BY
DATE REVISED
FUNCTIONAL SUPERVISOR: CARLOS A. PORTILLO

STATE OF CALIFORNIA - DEPARTMENT OF TRANSPORTATION
NORTH REGION
DIVISION OF ENGINEERING

LAST REVISION | DATE PLOTTED => 18-MAR-2015
04-29-14 | TIME PLOTTED => 15:08

BORDER LAST REVISED 7/2/2010
USERNAME => s130875
DGN FILE => 0300000224ia013.dgn
RELATIVE BORDER SCALE IS IN INCHES 0 1 2 3
UNIT 0305
PROJECT NUMBER & PHASE 03000002241

Dist	COUNTY	ROUTE	POST MILES TOTAL PROJECT	SHEET No.	TOTAL SHEETS
03	ED	89	13.8/18.0	62	164

Fermin Barriga B. 6-9-14
REGISTERED CIVIL ENGINEER DATE

6-16-14
PLANS APPROVAL DATE

REGISTERED PROFESSIONAL ENGINEER
FERMIN BARRIGA
No. C47047
Exp. 12-31-15
CIVIL
STATE OF CALIFORNIA

THE STATE OF CALIFORNIA OR ITS OFFICERS OR AGENTS SHALL NOT BE RESPONSIBLE FOR THE ACCURACY OR COMPLETENESS OF SCANNED COPIES OF THIS PLAN SHEET.

NOTES:

1. FOR ACCURATE RIGHT OF WAY DATA, CONTACT RIGHT OF WAY ENGINEERING AT THE DISTRICT OFFICE.
2. FOR ABBREVIATIONS AND LEGEND INFORMATION, SEE DRAINAGE PLAN SHEET D-1.
3. FOR CONCRETED-RSP (FACING, METHOD A) DETAILS, SEE DRAINAGE DETAILS SHEET DD-5.

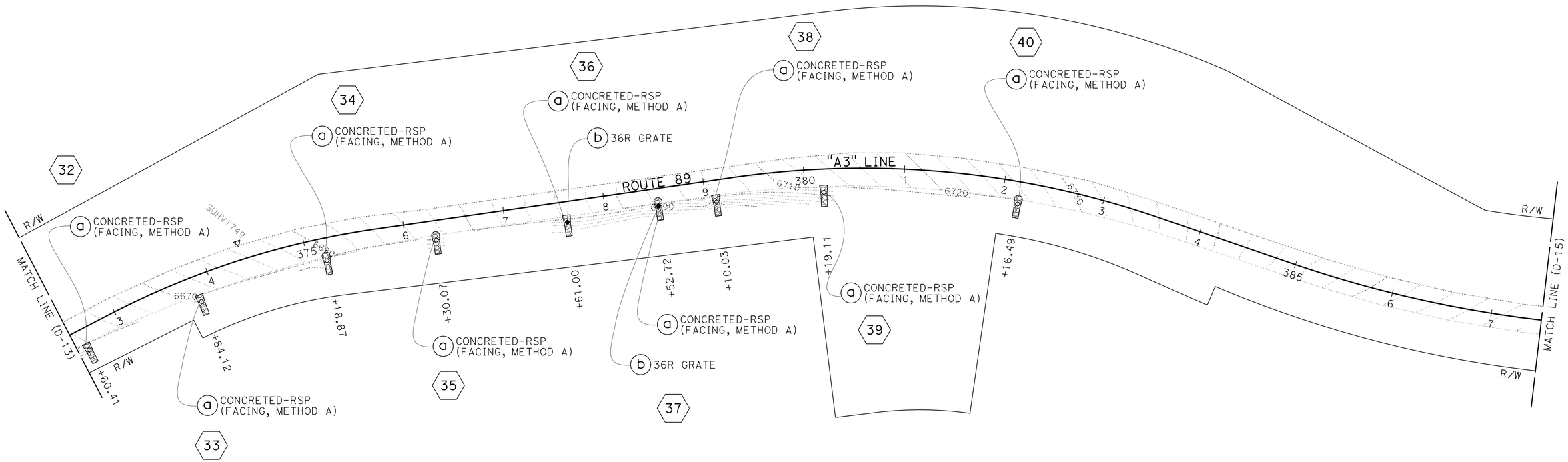

APPROVED FOR DRAINAGE WORK ONLY

DRAINAGE PLAN

SCALE: 1" = 50' **D-14**

STATE OF CALIFORNIA - DEPARTMENT OF TRANSPORTATION
Caltrans
NORTH REGION
DIVISION OF ENGINEERING

FUNCTIONAL SUPERVISOR: CARLOS A. PORTILLO
CALCULATED-DESIGNED BY: JOSE LUIS VALDEZ
CHECKED BY: FERMIN BARRIGA
REVISED BY / DATE REVISED

LAST REVISION: DATE PLOTTED => 18-MAR-2015
04-24-14 TIME PLOTTED => 15:08

BORDER LAST REVISED 7/2/2010
USERNAME => s130875
DGN FILE => 0300000224ia014.dgn
RELATIVE BORDER SCALE IS IN INCHES 0 1 2 3
UNIT 0305
PROJECT NUMBER & PHASE 03000002241

Dist	COUNTY	ROUTE	POST MILES TOTAL PROJECT	SHEET No.	TOTAL SHEETS
03	ED	89	13.8/18.0	63	164

Fermin Barriga B. 6-9-14
REGISTERED CIVIL ENGINEER DATE

6-16-14
PLANS APPROVAL DATE

REGISTERED PROFESSIONAL ENGINEER
FERMIN BARRIGA
No. C47047
Exp. 12-31-15
CIVIL
STATE OF CALIFORNIA

THE STATE OF CALIFORNIA OR ITS OFFICERS OR AGENTS SHALL NOT BE RESPONSIBLE FOR THE ACCURACY OR COMPLETENESS OF SCANNED COPIES OF THIS PLAN SHEET.

NOTES:

1. FOR ACCURATE RIGHT OF WAY DATA, CONTACT RIGHT OF WAY ENGINEERING AT THE DISTRICT OFFICE.
2. FOR ABBREVIATIONS AND LEGEND INFORMATION, SEE DRAINAGE PLAN SHEET D-1.
3. FOR CONCRETED-RSP (FACING, METHOD A) DETAILS, SEE DRAINAGE DETAILS SHEET DD-5.

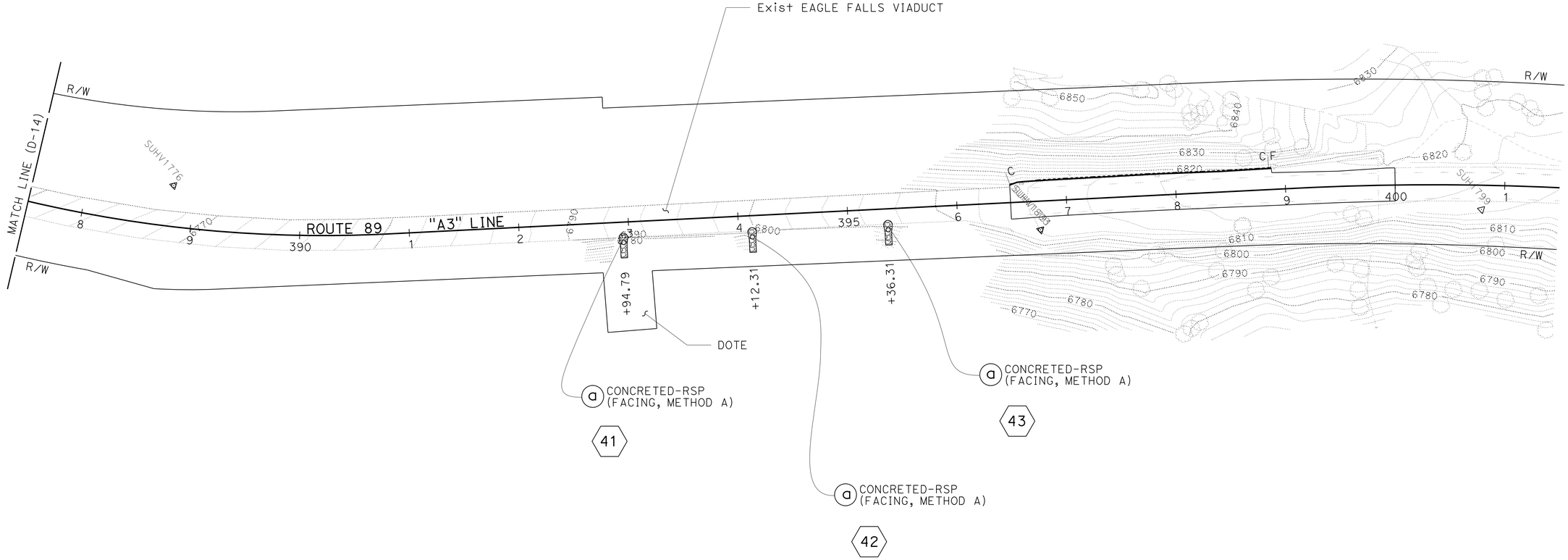

APPROVED FOR DRAINAGE WORK ONLY

DRAINAGE PLAN

SCALE: 1" = 50' **D-15**

STATE OF CALIFORNIA - DEPARTMENT OF TRANSPORTATION
NORTH REGION
DIVISION OF ENGINEERING
Caltrans

FUNCTIONAL SUPERVISOR: CARLOS A. PORTILLO
CALCULATED-DESIGNED BY: JOSE LUIS VALDEZ
CHECKED BY: FERMIN BARRIGA
REVISED BY
DATE REVISED

LAST REVISION DATE PLOTTED => 18-MAR-2015
LAST REVISION TIME PLOTTED => 15:08
04-24-14

BORDER LAST REVISED 7/2/2010
USERNAME => s130875
DGN FILE => 0300000224ia015.dgn
RELATIVE BORDER SCALE IS IN INCHES 0 1 2 3
UNIT 0305
PROJECT NUMBER & PHASE 03000002241

Dist	COUNTY	ROUTE	POST MILES TOTAL PROJECT	SHEET No.	TOTAL SHEETS
03	ED	89	13.8/18.0	64	164

Fermin Barriga B. 6-9-14
REGISTERED CIVIL ENGINEER DATE

FERMIN BARRIGA No. C47067 Exp. 12-31-15 CIVIL — REGISTERED PROFESSIONAL ENGINEER — STATE OF CALIFORNIA

6-16-14
PLANS APPROVAL DATE

THE STATE OF CALIFORNIA OR ITS OFFICERS OR AGENTS SHALL NOT BE RESPONSIBLE FOR THE ACCURACY OR COMPLETENESS OF SCANNED COPIES OF THIS PLAN SHEET.

NOTES:

1. FOR 1/4" CHECKERED PLATE COVER DETAILS NOT SHOWN, SEE Std PLAN D75A.

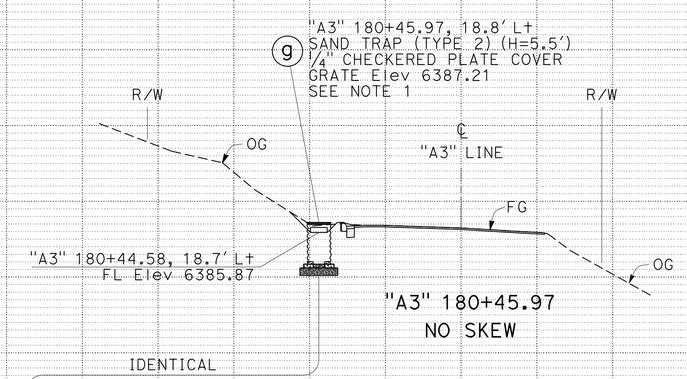

"A3" 180+45.97
NO SKEW

IDENTICAL
SAND TRAP

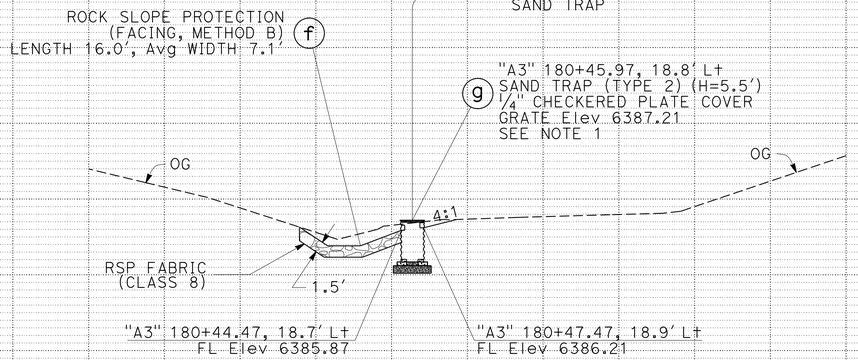

"A3" 180+30.96 TO "A3" 180+47.47 Lt

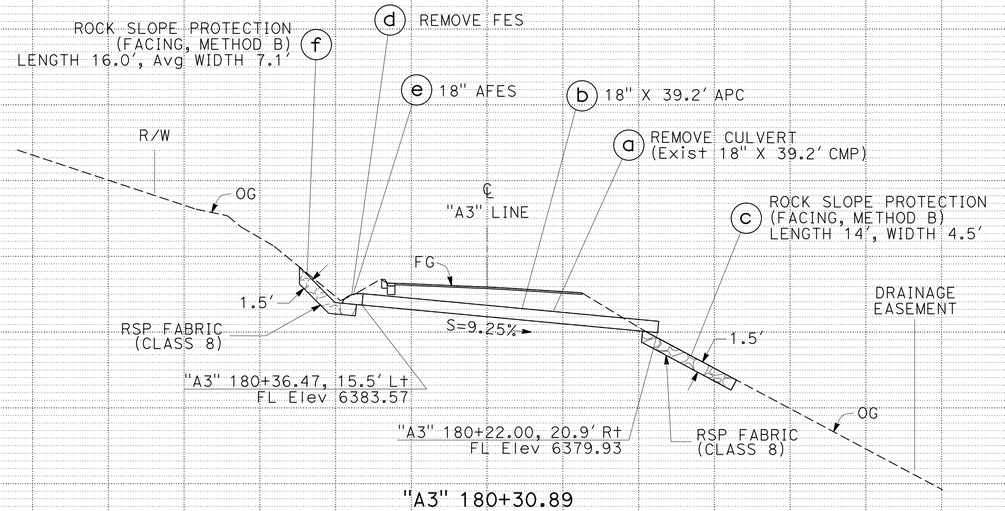

"A3" 180+30.89
SKEW 21°06'07"

DRAINAGE SYSTEM No. (1)

DRAINAGE PROFILES

SCALE: Horiz: 1" = 10'
Vert: 1" = 10'

DP-1

REVISED BY | DATE REVISED
JOSE LUIS VALDEZ | FERMIN BARRIGA
CALCULATED-DESIGNED BY | CHECKED BY
FUNCTIONAL SUPERVISOR: CARLOS A. PORTILLO
STATE OF CALIFORNIA - DEPARTMENT OF TRANSPORTATION
Caltrans®
NORTH REGION
DIVISION OF ENGINEERING

LAST REVISION DATE PLOTTED => 18-MAR-2015
04-29-14 TIME PLOTTED => 15:09

BORDER LAST REVISED 7/2/2010 | USERNAME => s130875 | DGN FILE => 03000002241b001.dgn | RELATIVE BORDER SCALE IS IN INCHES 0 1 2 3 | UNIT 0305 | PROJECT NUMBER & PHASE 03000002241

Dist	COUNTY	ROUTE	POST MILES TOTAL PROJECT	SHEET No.	TOTAL SHEETS
03	ED	89	13.8/18.0	65	164

Fermin Barriga B. 6-9-14
REGISTERED CIVIL ENGINEER DATE

6-16-14
PLANS APPROVAL DATE

FERMIN BARRIGA No. C47047 Exp. 12-31-15 CIVIL — REGISTERED PROFESSIONAL ENGINEER — STATE OF CALIFORNIA

THE STATE OF CALIFORNIA OR ITS OFFICERS OR AGENTS SHALL NOT BE RESPONSIBLE FOR THE ACCURACY OR COMPLETENESS OF SCANNED COPIES OF THIS PLAN SHEET.

NOTES:

1. CONTRACTOR SHALL PROTECT IN PLACE Exist DRAINAGE INLET.

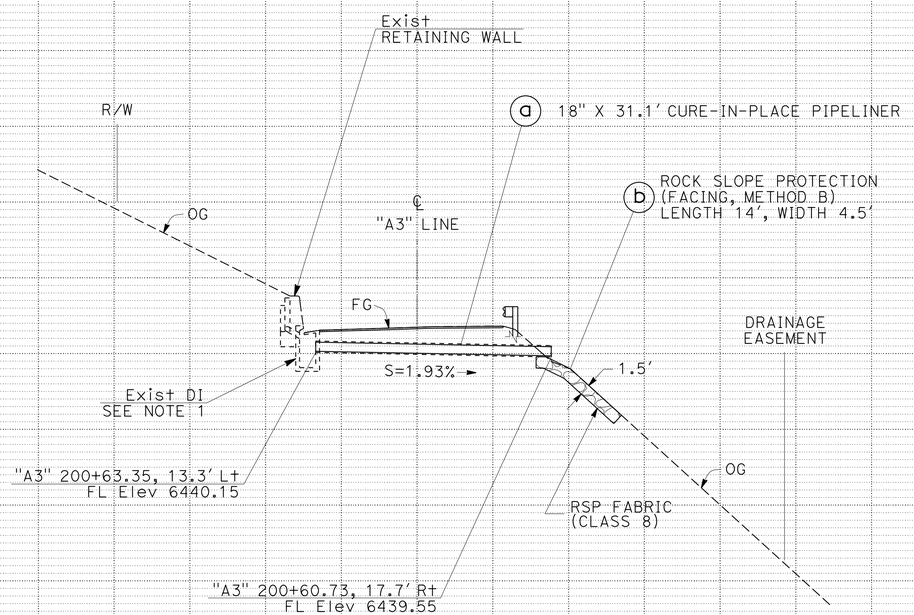

DRAINAGE SYSTEM No. (2)

"A3" 200+62.15
SKEW 4°49'29"

DRAINAGE PROFILES

SCALE: Horiz: 1" = 10'
Vert: 1" = 10'

DP-2

STATE OF CALIFORNIA - DEPARTMENT OF TRANSPORTATION
NORTH REGION
DIVISION OF ENGINEERING
Caltrans

FUNCTIONAL SUPERVISOR: CARLOS A. PORTILLO
CALCULATED-DESIGNED BY:
CHECKED BY: FERMIN BARRIGA
REVISED BY:
DATE REVISED:
JOSE LUIS VALDEZ

LAST REVISION
DATE PLOTTED => 18-MAR-2015
TIME PLOTTED => 15:09
04-29-14

BORDER LAST REVISED 7/2/2010
USERNAME => s130875
DGN FILE => 03000002241ib002.dgn
RELATIVE BORDER SCALE IS IN INCHES
UNIT 0305
PROJECT NUMBER & PHASE 03000002241

Dist	COUNTY	ROUTE	POST MILES TOTAL PROJECT	SHEET No.	TOTAL SHEETS
03	ED	89	13.8/18.0	66	164

Fermin Barriga B. 6-9-14
REGISTERED CIVIL ENGINEER DATE

FERMIN BARRIGA No. C47046 Exp. 12-31-15 CIVIL — REGISTERED PROFESSIONAL ENGINEER — STATE OF CALIFORNIA

6-16-14
PLANS APPROVAL DATE

THE STATE OF CALIFORNIA OR ITS OFFICERS OR AGENTS SHALL NOT BE RESPONSIBLE FOR THE ACCURACY OR COMPLETENESS OF SCANNED COPIES OF THIS PLAN SHEET.

NOTES:

1. CONTRACTOR SHALL PROTECT IN PLACE Exist DRAINAGE INLET.

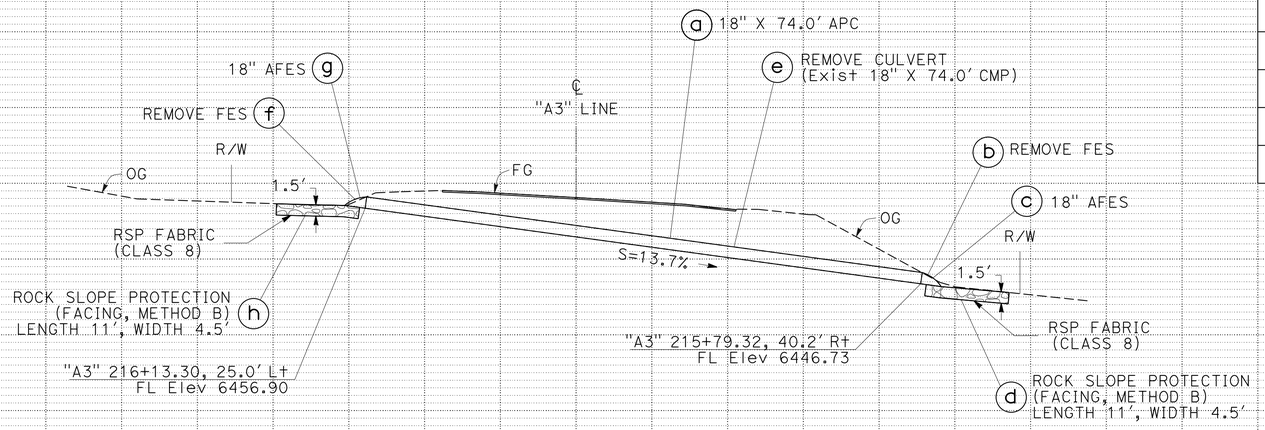

DRAINAGE SYSTEM No. (4)

"A3" 216+01.44
SKEW 26°34'48"

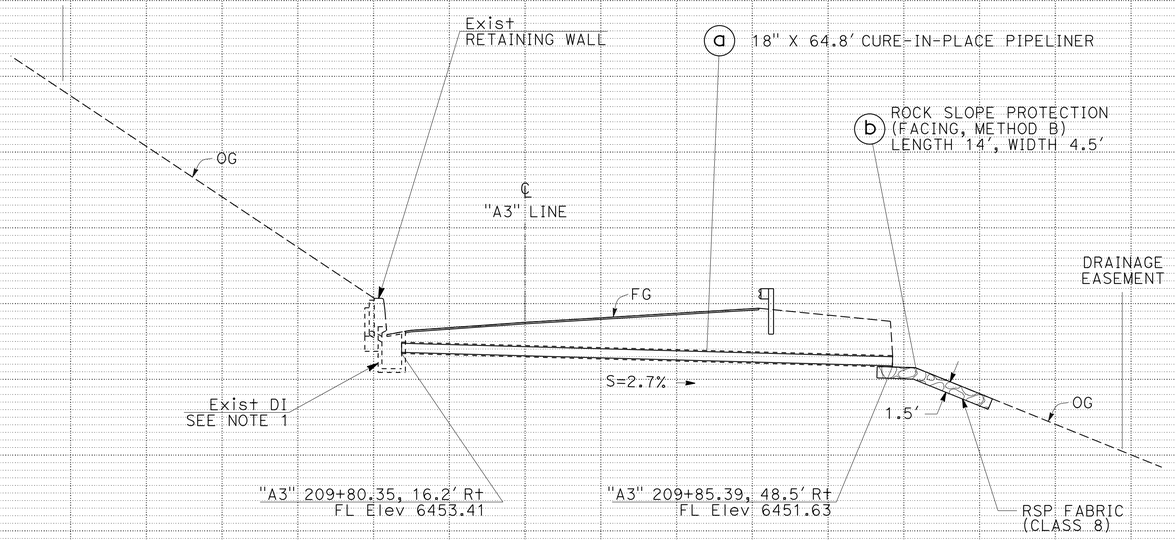

DRAINAGE SYSTEM No. (3)

"A3" 209+82.49
SKEW -4°27'15"

DRAINAGE PROFILES

SCALE: Horiz: 1" = 10'
Vert: 1" = 10'

DP-3

STATE OF CALIFORNIA - DEPARTMENT OF TRANSPORTATION
NORTH REGION
DIVISION OF ENGINEERING
Caltrans

FUNCTIONAL SUPERVISOR: CARLOS A. PORTILLO
CALCULATED-DESIGNED BY:
CHECKED BY: FERMIN BARRIGA
REVISED BY:
DATE REVISED:

LAST REVISION: DATE PLOTTED => 16-MAR-2015
04-29-14 TIME PLOTTED => 15:09

BORDER LAST REVISED 7/2/2010
USERNAME => s130875
DGN FILE => 0300000224ib003.dgn
RELATIVE BORDER SCALE IS IN INCHES 0 1 2 3
UNIT 0305
PROJECT NUMBER & PHASE 03000002241

Dist	COUNTY	ROUTE	POST MILES TOTAL PROJECT	SHEET No.	TOTAL SHEETS
03	ED	89	13.8/18.0	67	164

Fermin Barriga 6-9-14
REGISTERED CIVIL ENGINEER DATE

FERMIN BARRIGA No. C47047 Exp. 12-31-15 CIVIL — REGISTERED PROFESSIONAL ENGINEER — STATE OF CALIFORNIA

6-16-14
PLANS APPROVAL DATE

THE STATE OF CALIFORNIA OR ITS OFFICERS OR AGENTS SHALL NOT BE RESPONSIBLE FOR THE ACCURACY OR COMPLETENESS OF SCANNED COPIES OF THIS PLAN SHEET.

NOTES:

1. FOR 1/4" CHECKERED PLATE COVER DETAILS NOT SHOWN, SEE Std PLAN D75A.
2. CONTRACTOR SHALL PROTECT IN PLACE Exist 18" CMP.
3. FOR ADDITIONAL SETTLING BASIN INFORMATION, SEE DRAINAGE DETAILS SHEETS DD-3 AND DD-8, DRAINAGE QUANTITIES SHEET DQ-9 AND DRAINAGE PLAN SHEETS D-3 AND D-4.

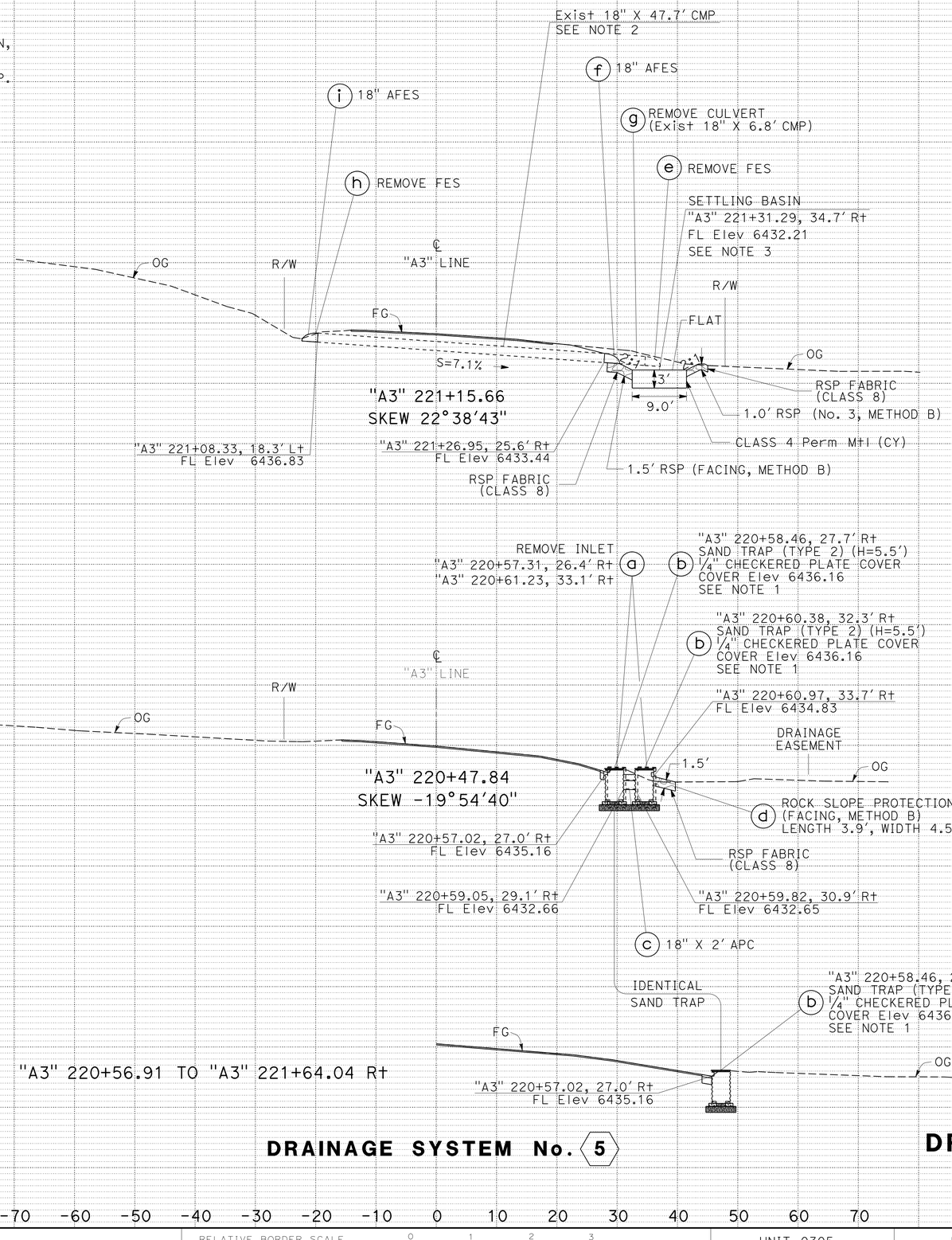

DRAINAGE SYSTEM No. (5)

DRAINAGE PROFILES

SCALE: Horiz: 1" = 10'
Vert: 1" = 10'

DP-4

REVISED BY | DATE REVISED
JOSE LUIS VALDEZ | FERMIN BARRIGA
CALCULATED-DESIGNED BY | CHECKED BY
FUNCTIONAL SUPERVISOR: CARLOS A. PORTILLO

STATE OF CALIFORNIA - DEPARTMENT OF TRANSPORTATION
NORTH REGION
DIVISION OF ENGINEERING
Caltrans

LAST REVISION: DATE PLOTTED => 18-MAR-2015
06-05-14 TIME PLOTTED => 15:09

BORDER LAST REVISED 7/2/2010 | USERNAME => s130875 | DGN FILE => 03000000224ib004.dgn | RELATIVE BORDER SCALE IS IN INCHES 0 1 2 3 | UNIT 0305 | PROJECT NUMBER & PHASE 03000002241

Dist	COUNTY	ROUTE	POST MILES TOTAL PROJECT	SHEET No.	TOTAL SHEETS
03	ED	89	13.8/18.0	68	164

Fermin Barriga 6-9-14
REGISTERED CIVIL ENGINEER DATE

6-16-14
PLANS APPROVAL DATE

FERMIN BARRIGA No. C47046 Exp. 12-31-15 CIVIL — REGISTERED PROFESSIONAL ENGINEER — STATE OF CALIFORNIA

THE STATE OF CALIFORNIA OR ITS OFFICERS OR AGENTS SHALL NOT BE RESPONSIBLE FOR THE ACCURACY OR COMPLETENESS OF SCANNED COPIES OF THIS PLAN SHEET.

NOTES:

1. CONTRACTOR SHALL PROTECT IN PLACE Exist 18" CMP.

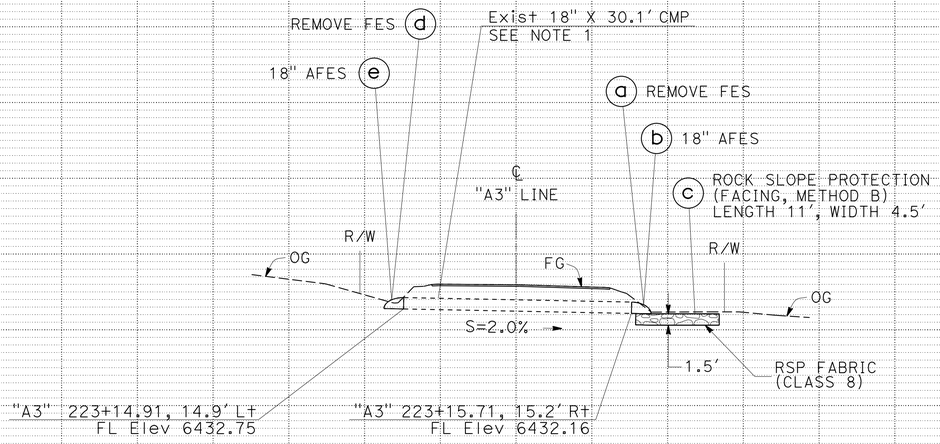

DRAINAGE SYSTEM No. (7)

"A3" 223+15.30
SKEW -1°32'04"

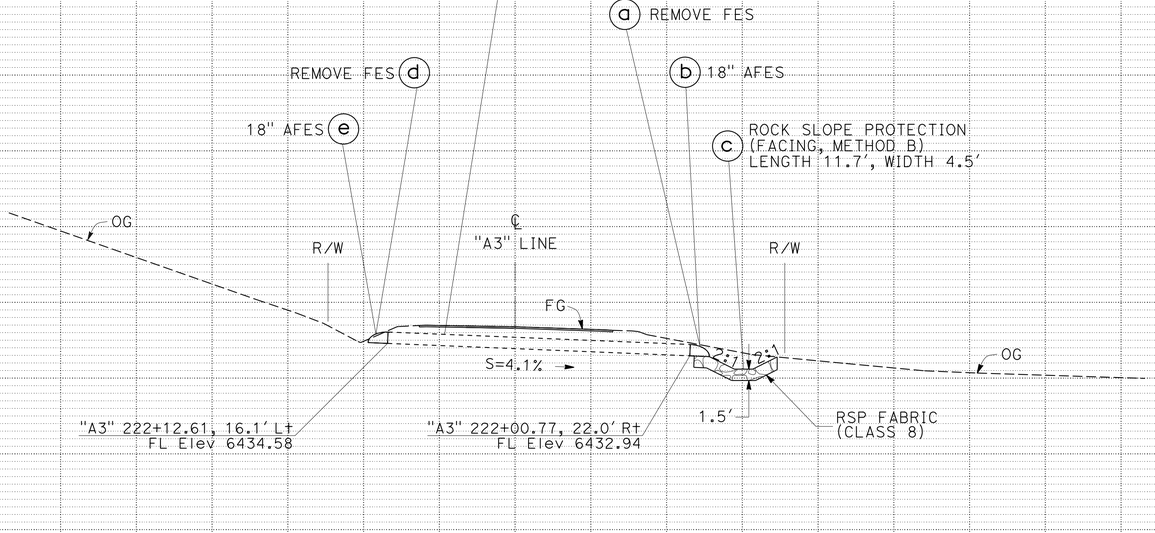

DRAINAGE SYSTEM No. (6)

"A3" 222+07.62
SKEW 17°16'20"

DRAINAGE PROFILES

SCALE: Horiz: 1" = 10'
Vert: 1" = 10'

DP-5

6450 6445 6440 6435 6430 6425 6420 6415 6410 6460 6455

-140 -130 -120 -110 -100 -90 -80 -70 -60 -50 -40 -30 -20 -10 0 10 20 30 40 50 60 70

REVISED BY | DATE REVISED

JOSE LUIS VALDEZ | FERMIN BARRIGA
CALCULATED-DESIGNED BY | CHECKED BY

FUNCTIONAL SUPERVISOR: CARLOS A. PORTILLO

STATE OF CALIFORNIA - DEPARTMENT OF TRANSPORTATION
NORTH REGION
DIVISION OF ENGINEERING
Caltrans

LAST REVISION: DATE PLOTTED => 18-MAR-2015
06-05-14 TIME PLOTTED => 15:09

BORDER LAST REVISED 7/2/2010 | USERNAME => s130875 | DGN FILE => 03000000224ib005.dgn | RELATIVE BORDER SCALE IS IN INCHES 0 1 2 3 | UNIT 0305 | PROJECT NUMBER & PHASE 03000002241

Dist	COUNTY	ROUTE	POST MILES TOTAL PROJECT	SHEET No.	TOTAL SHEETS
03	ED	89	13.8/18.0	69	164

Fermin Barriga 6-9-14
REGISTERED CIVIL ENGINEER DATE

FERMIN BARRIGA No. C47047 Exp. 12-31-15 CIVIL — REGISTERED PROFESSIONAL ENGINEER — STATE OF CALIFORNIA

6-16-14
PLANS APPROVAL DATE

THE STATE OF CALIFORNIA OR ITS OFFICERS OR AGENTS SHALL NOT BE RESPONSIBLE FOR THE ACCURACY OR COMPLETENESS OF SCANNED COPIES OF THIS PLAN SHEET.

NOTES:

1. Approx LOCATION OF Exist 6" AND 8" WATER LINES. CONTRACTOR SHALL PROTECT IN PLACE Exist 6" AND 8" WATER LINES.
2. FOR ADDITIONAL SETTLING BASIN INFORMATION, SEE DRAINAGE DETAILS SHEETS DD-3 AND DD-8, DRAINAGE QUANTITIES SHEET DQ-9 AND DRAINAGE PLAN SHEETS D-3 AND D-4.
3. FOR 1/4" CHECKERED PLATE COVER DETAILS NOT SHOWN, SEE Std PLAN D75A.

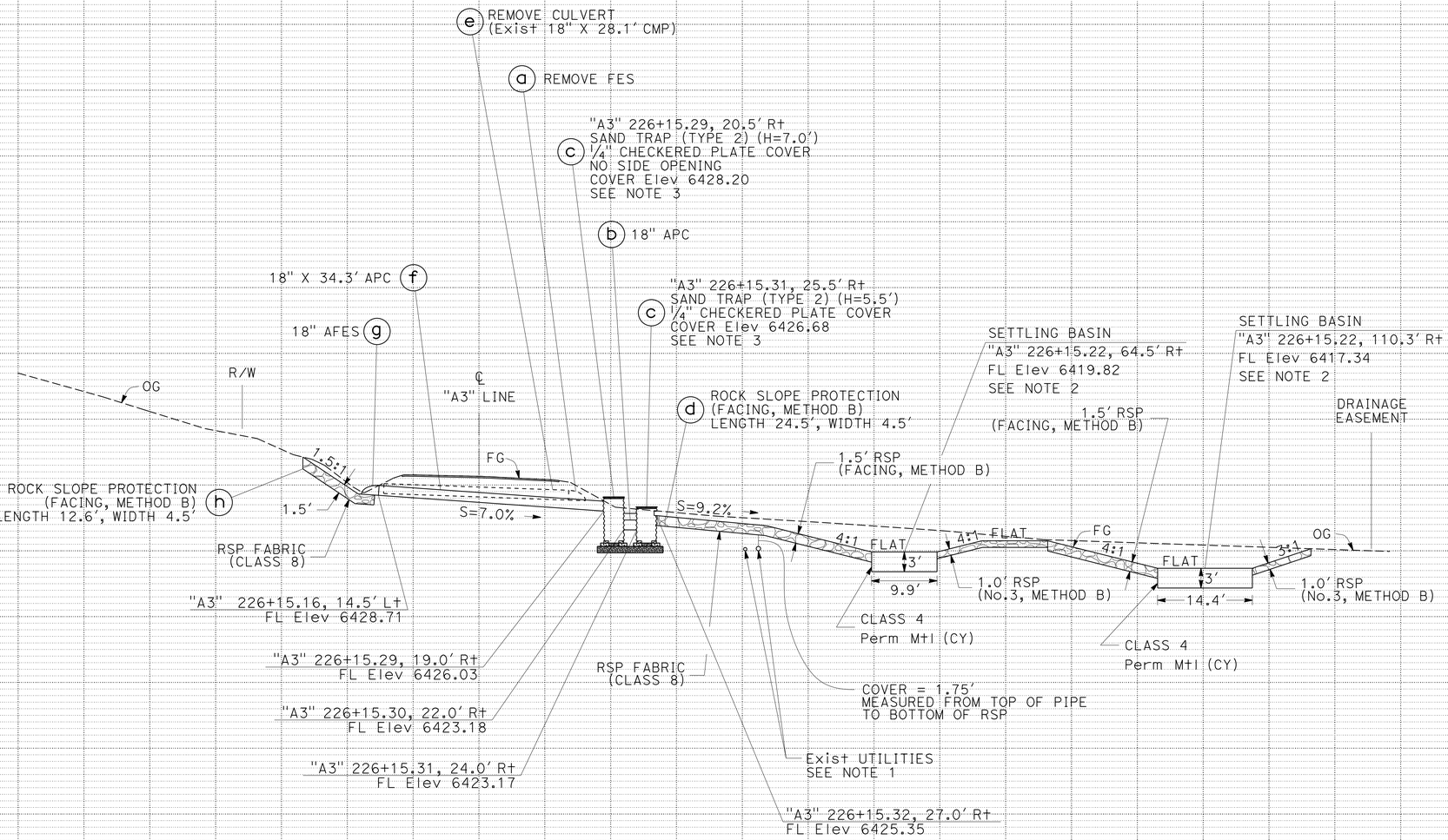

DRAINAGE SYSTEM No. 8

"A3" 226+15.22
SKEW -0°13'01"

DRAINAGE PROFILES

SCALE: Horiz: 1" = 10'
Vert: 1" = 10'

DP-6

REVISED BY | DATE REVISED
JOSE LUIS VALDEZ | FERMIN BARRIGA
CALCULATED-DESIGNED BY | CHECKED BY
FUNCTIONAL SUPERVISOR: CARLOS A. PORTILLO
STATE OF CALIFORNIA - DEPARTMENT OF TRANSPORTATION
NORTH REGION DIVISION OF ENGINEERING
Caltrans

LAST REVISION DATE PLOTTED => 18-MAR-2015
TIME PLOTTED => 15:09
06-05-14

BORDER LAST REVISED 7/2/2010 | USERNAME => s130875 | DGN FILE => 03000000224ib006.dgn | RELATIVE BORDER SCALE IS IN INCHES 0 1 2 3 | UNIT 0305 | PROJECT NUMBER & PHASE 03000002241

Dist	COUNTY	ROUTE	POST MILES TOTAL PROJECT	SHEET No.	TOTAL SHEETS
03	ED	89	13.8/18.0	70	164

Fermin Barriga 6-9-14
REGISTERED CIVIL ENGINEER DATE

FERMIN BARRIGA No. C47046 Exp. 12-31-15 CIVIL — REGISTERED PROFESSIONAL ENGINEER — STATE OF CALIFORNIA

6-16-14
PLANS APPROVAL DATE

THE STATE OF CALIFORNIA OR ITS OFFICERS OR AGENTS SHALL NOT BE RESPONSIBLE FOR THE ACCURACY OR COMPLETENESS OF SCANNED COPIES OF THIS PLAN SHEET.

NOTES:

1. FOR 1/4" CHECKERED PLATE COVER DETAILS NOT SHOWN, SEE Std PLAN D75A.
2. FOR ADDITIONAL SETTLING BASIN INFORMATION, SEE DRAINAGE DETAILS SHEETS DD-3 AND DD-9, DRAINAGE QUANTITIES SHEET DQ-9 AND DRAINAGE PLAN SHEETS D-3 AND D-4.

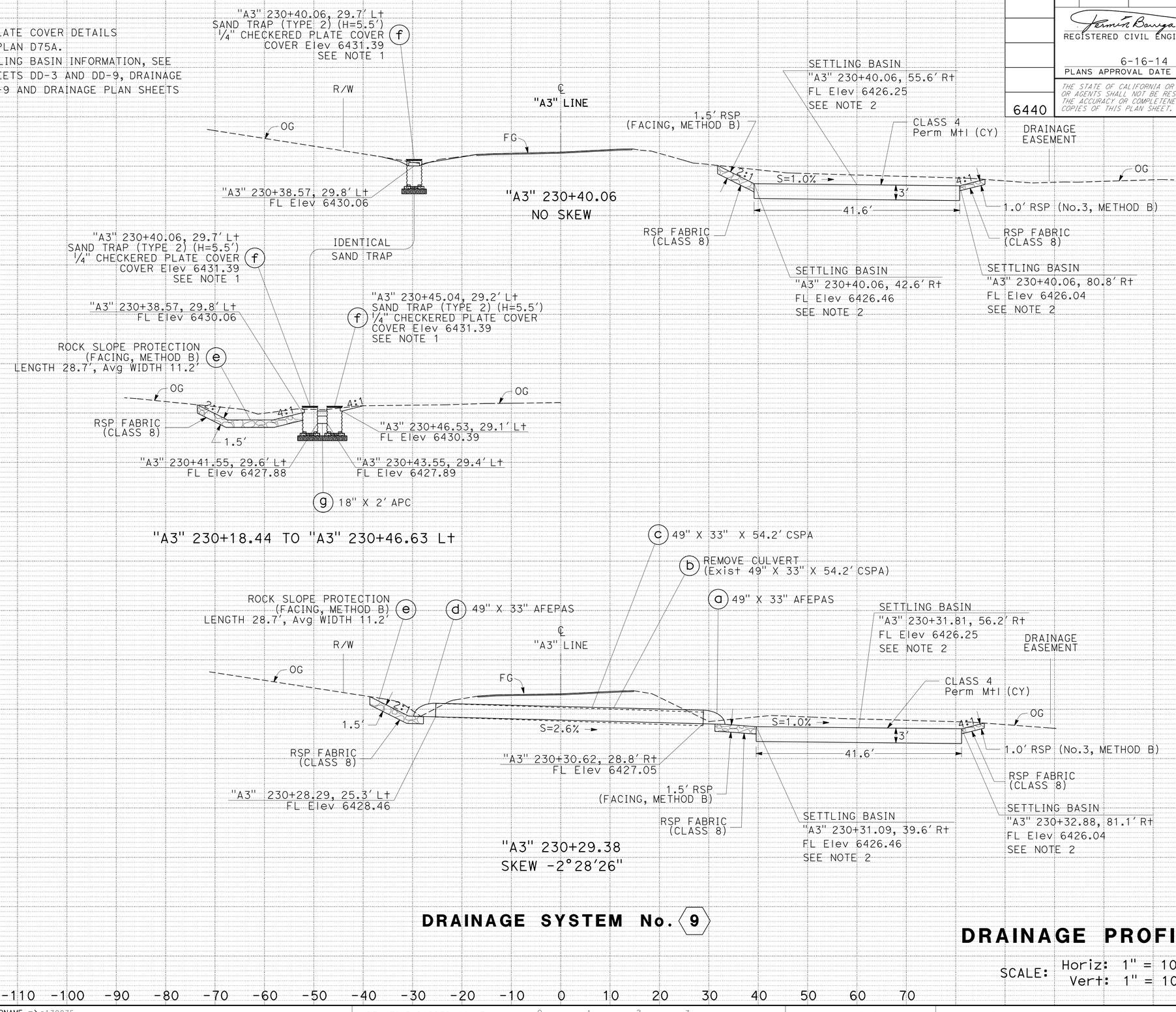

DRAINAGE SYSTEM No. (6)

DRAINAGE PROFILES

SCALE: Horiz: 1" = 10'
Vert: 1" = 10'

DP-7

REVISED BY | DATE REVISED
JOSE LUIS VALDEZ | FERMIN BARRIGA
CALCULATED-DESIGNED BY | CHECKED BY
CARLOS A. PORTILLO
FUNCTIONAL SUPERVISOR
STATE OF CALIFORNIA - DEPARTMENT OF TRANSPORTATION
NORTH REGION
DIVISION OF ENGINEERING
Caltrans

LAST REVISION 06-05-14 | DATE PLOTTED => 18-MAR-2015 | TIME PLOTTED => 15:09

BORDER LAST REVISED 7/2/2010 | USERNAME => s130875 | DGN FILE => 0300000224ib007.dgn | RELATIVE BORDER SCALE IS IN INCHES 0 1 2 3 | UNIT 0305 | PROJECT NUMBER & PHASE 03000002241

Dist	COUNTY	ROUTE	POST MILES TOTAL PROJECT	SHEET No.	TOTAL SHEETS
03	ED	89	13.8/18.0	71	164

Fermin Barriga 6-9-14
REGISTERED CIVIL ENGINEER DATE

FERMIN BARRIGA No. C47047 Exp. 12-31-15 CIVIL — REGISTERED PROFESSIONAL ENGINEER — STATE OF CALIFORNIA

6-16-14
PLANS APPROVAL DATE

THE STATE OF CALIFORNIA OR ITS OFFICERS OR AGENTS SHALL NOT BE RESPONSIBLE FOR THE ACCURACY OR COMPLETENESS OF SCANNED COPIES OF THIS PLAN SHEET.

REVISED BY
DATE REVISED

JOSE LUIS VALDEZ
FERMIN BARRIGA
CALCULATED-DESIGNED BY
CHECKED BY

FUNCTIONAL SUPERVISOR
CARLOS A. PORTILLO

STATE OF CALIFORNIA - DEPARTMENT OF TRANSPORTATION
NORTH REGION
DIVISION OF ENGINEERING
Caltrans

NOTES:

1. FOR 1/4" CHECKERED PLATE COVER DETAILS NOT SHOWN, SEE Std PLAN D75A.

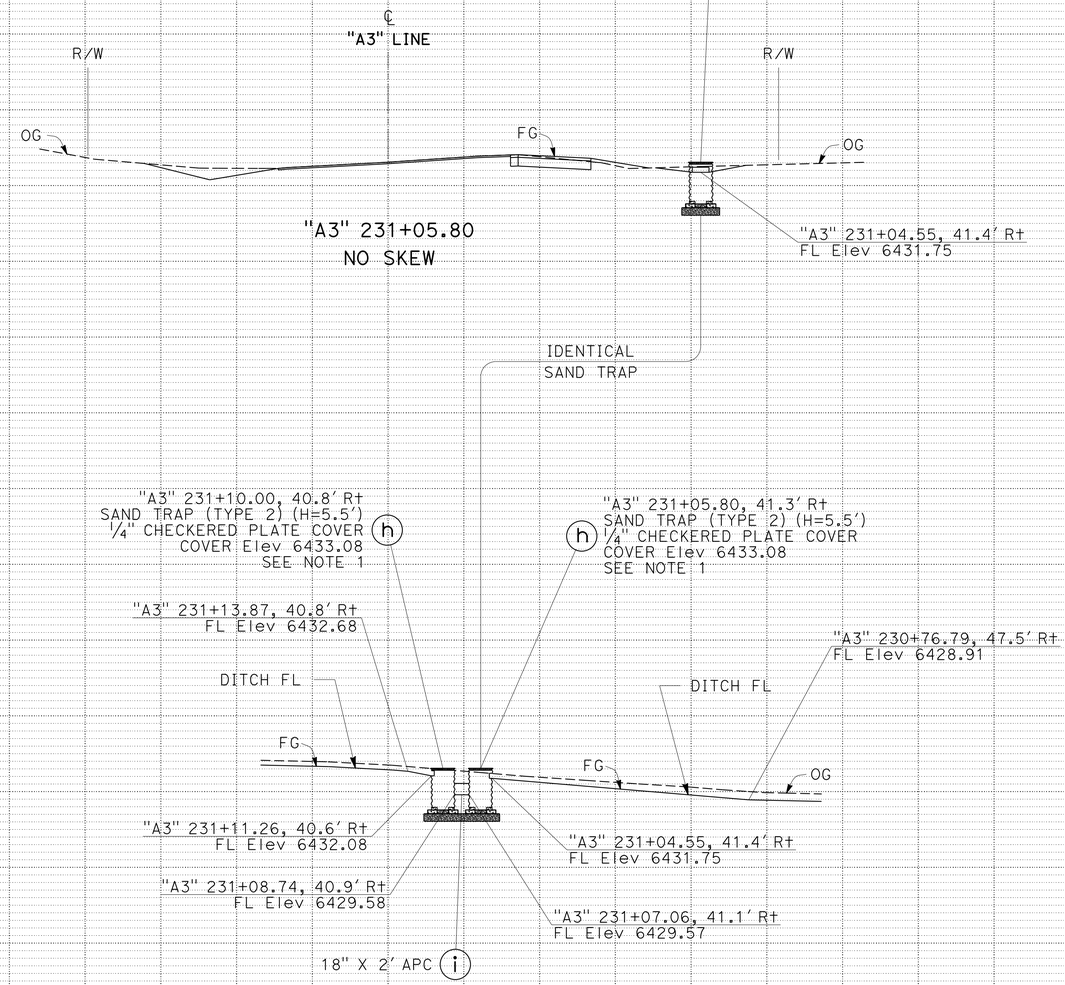

"A3" 231+04.47 TO "A3" 231+11.34 Rt

DRAINAGE SYSTEM No. 9

DRAINAGE PROFILES

SCALE: Horiz: 1" = 10'
Vert: 1" = 10'

DP-8

LAST REVISION
DATE PLOTTED => 16-MAR-2015
06-06-14 TIME PLOTTED => 15:09

BORDER LAST REVISED 7/2/2010
USERNAME => s130875
DGN FILE => 0300000224ib008.dgn
RELATIVE BORDER SCALE IS IN INCHES 0 1 2 3
UNIT 0305
PROJECT NUMBER & PHASE 03000002241

Dist	COUNTY	ROUTE	POST MILES TOTAL PROJECT	SHEET No.	TOTAL SHEETS
03	ED	89	13.8/18.0	72	164

Fermin Barriga 6-9-14
REGISTERED CIVIL ENGINEER DATE

6-16-14
PLANS APPROVAL DATE

REGISTERED PROFESSIONAL ENGINEER — FERMIN BARRIGA — No. C47047 — Exp. 12-31-15 — CIVIL — STATE OF CALIFORNIA

THE STATE OF CALIFORNIA OR ITS OFFICERS OR AGENTS SHALL NOT BE RESPONSIBLE FOR THE ACCURACY OR COMPLETENESS OF SCANNED COPIES OF THIS PLAN SHEET.

NOTES:

1. FOR GRATE TYPE 36R DETAILS NOT SHOWN, SEE Std PLAN D75A AND RSP D77B.
2. CONTRACTOR SHALL PROTECT IN PLACE Exist DRAINAGE INLET AND Exist 18" CMP.

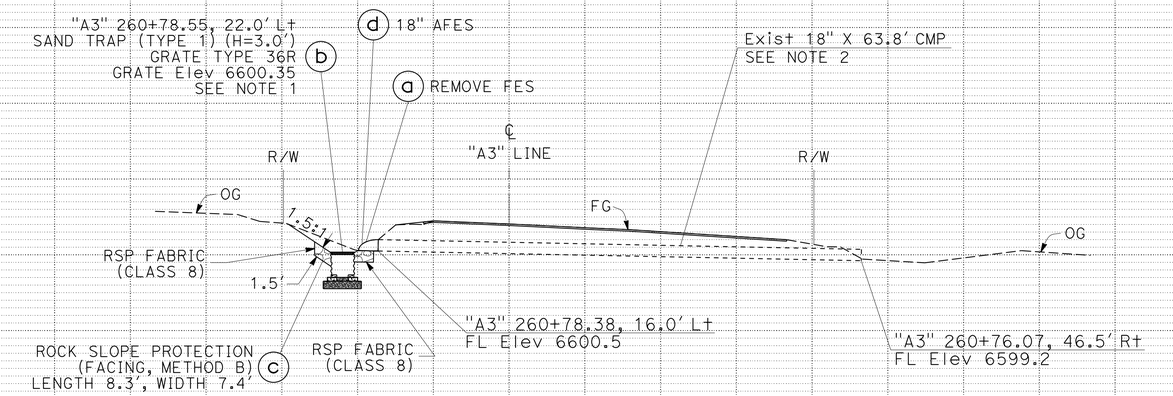

DRAINAGE SYSTEM No. 11

"A3" 260+77.75
SKEW 1°13'36"

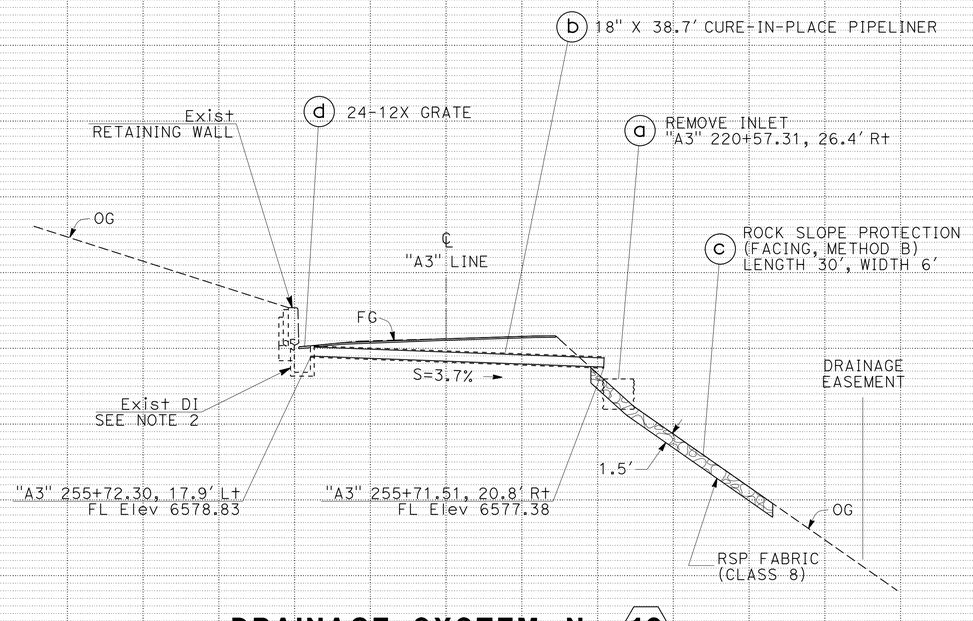

DRAINAGE SYSTEM No. 10

"A3" 255+71.90
SKEW -1°10'23"

DRAINAGE PROFILES

SCALE: Horiz: 1" = 10'
Vert: 1" = 10'

DP-9

6610 6605 6600 6595 6590 6585 6580 6575 6570 6565 6560

-140 -130 -120 -110 -100 -90 -80 -70 -60 -50 -40 -30 -20 -10 0 10 20 30 40 50 60 70

REVISED BY | DATE REVISED
JOSE LUIS VALDEZ | FERMIN BARRIGA
CALCULATED-DESIGNED BY | CHECKED BY
FUNCTIONAL SUPERVISOR: CARLOS A. PORTILLO

STATE OF CALIFORNIA - DEPARTMENT OF TRANSPORTATION
Caltrans®
NORTH REGION
DIVISION OF ENGINEERING

LAST REVISION DATE PLOTTED => 18-MAR-2015
06-05-14 TIME PLOTTED => 15:09

BORDER LAST REVISED 7/2/2010 | USERNAME => s130875 | DGN FILE => 03000002241ib009.dgn | RELATIVE BORDER SCALE IS IN INCHES 0 1 2 3 | UNIT 0305 | PROJECT NUMBER & PHASE 03000002241

Dist	COUNTY	ROUTE	POST MILES TOTAL PROJECT	SHEET No.	TOTAL SHEETS
03	ED	89	13.8/18.0	73	164

Fermin Barriga B. 6-9-14
REGISTERED CIVIL ENGINEER DATE

FERMIN BARRIGA No. C47046 Exp. 12-31-15 CIVIL — REGISTERED PROFESSIONAL ENGINEER — STATE OF CALIFORNIA

6-16-14
PLANS APPROVAL DATE

THE STATE OF CALIFORNIA OR ITS OFFICERS OR AGENTS SHALL NOT BE RESPONSIBLE FOR THE ACCURACY OR COMPLETENESS OF SCANNED COPIES OF THIS PLAN SHEET.

REVISED BY | DATE REVISED

JOSE LUIS VALDEZ | FERMIN BARRIGA

CALCULATED-DESIGNED BY | CHECKED BY

FUNCTIONAL SUPERVISOR: CARLOS A. PORTILLO

STATE OF CALIFORNIA - DEPARTMENT OF TRANSPORTATION
NORTH REGION
DIVISION OF ENGINEERING
Caltrans

NOTES:

1. FOR 1/4" CHECKERED PLATE COVER DETAILS NOT SHOWN, SEE Std PLAN D75A.
2. FOR ADDITIONAL Mod HMA OVERSIDE DRAIN INFORMATION, SEE LAYOUT SHEET L-6 AND CONSTRUCTION DETAILS SHEET C-24.
3. FOR CONCRETE BACKFILL (PIPE TRENCH) DETAILS, SEE DRAINAGE DETAILS SHEET DD-3.

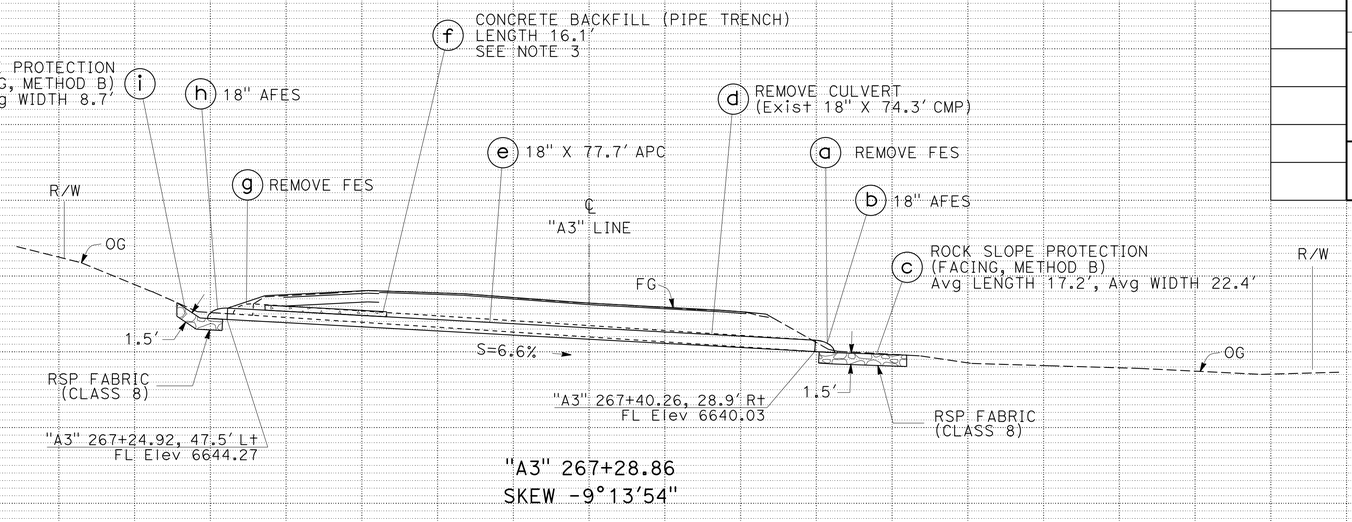

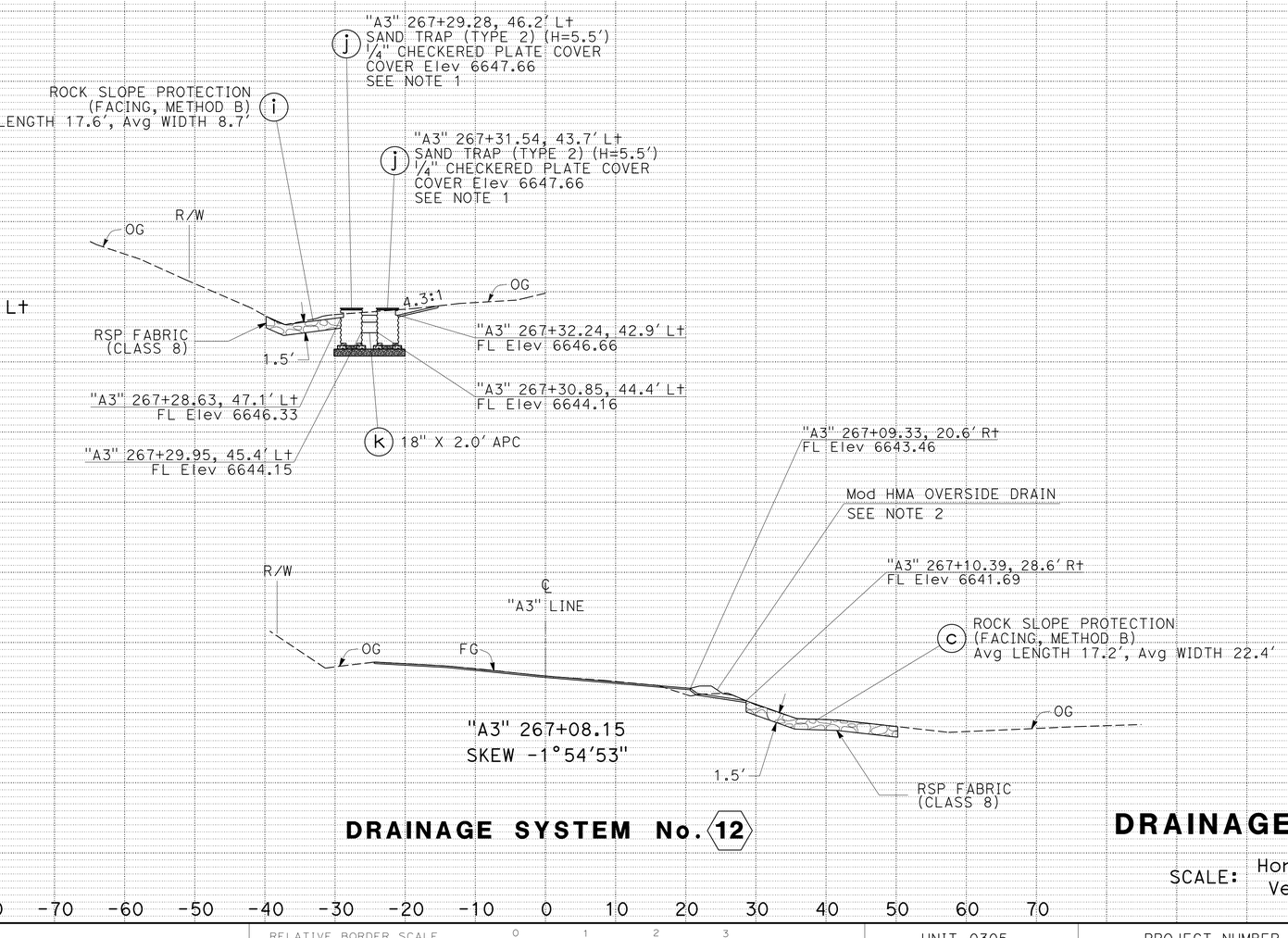

DRAINAGE SYSTEM No. 12

DRAINAGE PROFILES

SCALE: Horiz: 1" = 10'
Vert: 1" = 10'

DP-10

LAST REVISION | DATE PLOTTED => 18-MAR-2015
06-05-14 | TIME PLOTTED => 15:09

BORDER LAST REVISED 7/2/2010 | USERNAME => s130875 | DGN FILE => 03000002241ib010.dgn | RELATIVE BORDER SCALE IS IN INCHES 0 1 2 3 | UNIT 0305 | PROJECT NUMBER & PHASE 03000002241

Dist	COUNTY	ROUTE	POST MILES TOTAL PROJECT	SHEET No.	TOTAL SHEETS
03	ED	89	13.8/18.0	74	164

Fermin Barriga B. 6-9-14
REGISTERED CIVIL ENGINEER DATE

FERMIN BARRIGA No. C47047 Exp. 12-31-15 CIVIL — REGISTERED PROFESSIONAL ENGINEER — STATE OF CALIFORNIA

6-16-14
PLANS APPROVAL DATE

THE STATE OF CALIFORNIA OR ITS OFFICERS OR AGENTS SHALL NOT BE RESPONSIBLE FOR THE ACCURACY OR COMPLETENESS OF SCANNED COPIES OF THIS PLAN SHEET.

NOTES:

1. FOR PCC APRON DETAILS, SEE DRAINAGE DETAILS SHEET DD-6.

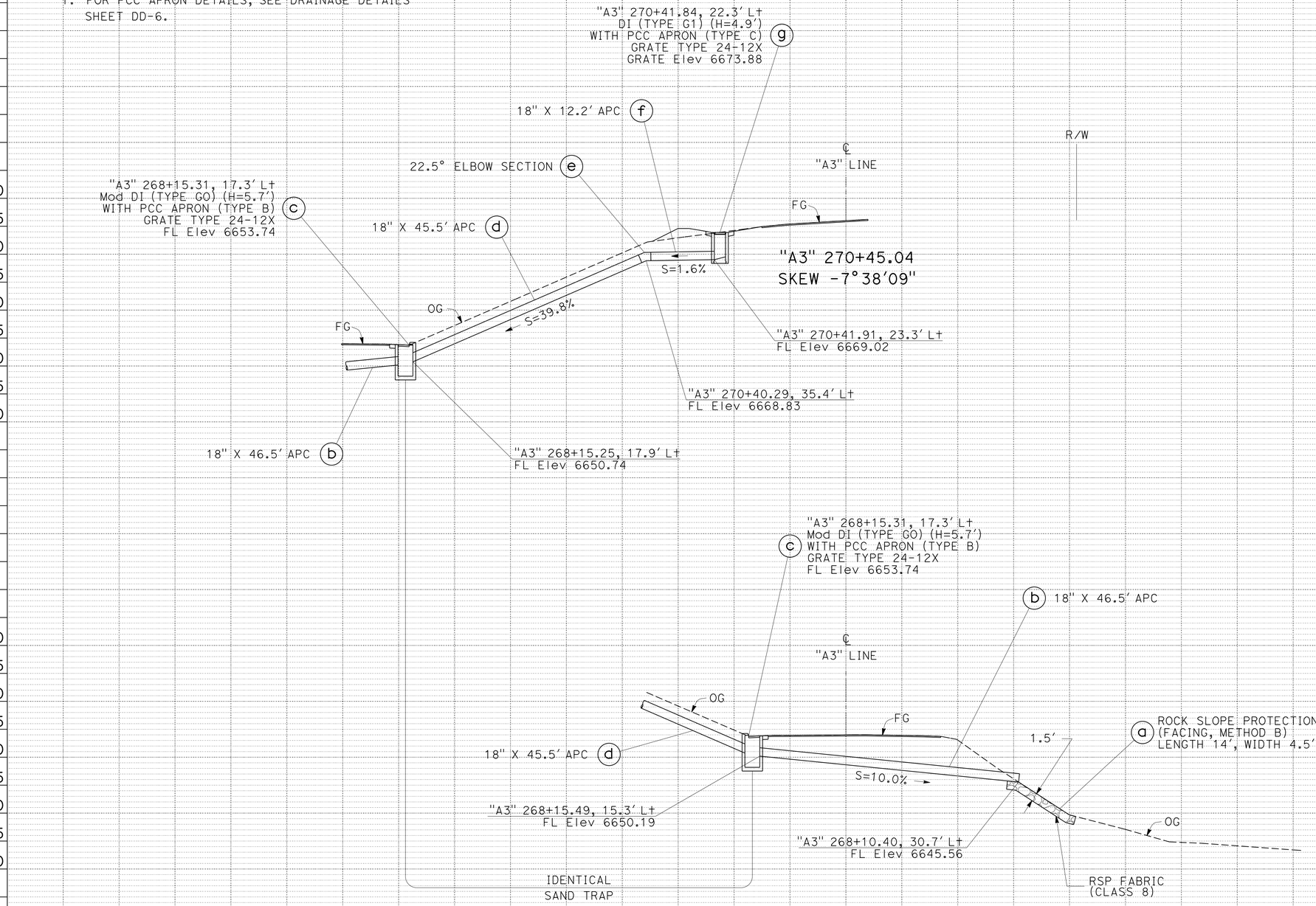

-140 -130 -120 -110 -100 -90 -80 -70 -60 -50 -40 -30 -20 -10 0 10 20 30 40 50 60 70

DRAINAGE SYSTEM No. 13

DRAINAGE PROFILES

SCALE: Horiz: 1" = 10'
Vert: 1" = 10'

DP-11

STATE OF CALIFORNIA - DEPARTMENT OF TRANSPORTATION
NORTH REGION
DIVISION OF ENGINEERING
Caltrans

FUNCTIONAL SUPERVISOR: CARLOS A. PORTILLO
CALCULATED-DESIGNED BY: JOSE LUIS VALDEZ
CHECKED BY: FERMIN BARRIGA
REVISED BY
DATE REVISED

LAST REVISION DATE PLOTTED => 18-MAR-2015
06-05-14 TIME PLOTTED => 15:09

BORDER LAST REVISED 7/2/2010
USERNAME => s130875
DGN FILE => 03000002241b011.dgn
RELATIVE BORDER SCALE IS IN INCHES 0 1 2 3
UNIT 0305
PROJECT NUMBER & PHASE 03000002241

Dist	COUNTY	ROUTE	POST MILES TOTAL PROJECT	SHEET No.	TOTAL SHEETS
03	ED	89	13.8/18.0	75	164

Fermin Barriga 6-9-14
REGISTERED CIVIL ENGINEER DATE

6-16-14
PLANS APPROVAL DATE

FERMIN BARRIGA No. C47047 Exp. 12-31-15 CIVIL — REGISTERED PROFESSIONAL ENGINEER — STATE OF CALIFORNIA

THE STATE OF CALIFORNIA OR ITS OFFICERS OR AGENTS SHALL NOT BE RESPONSIBLE FOR THE ACCURACY OR COMPLETENESS OF SCANNED COPIES OF THIS PLAN SHEET.

NOTES:

1. CONTRACTOR SHALL PROTECT IN PLACE Exist DRAINAGE INLET.

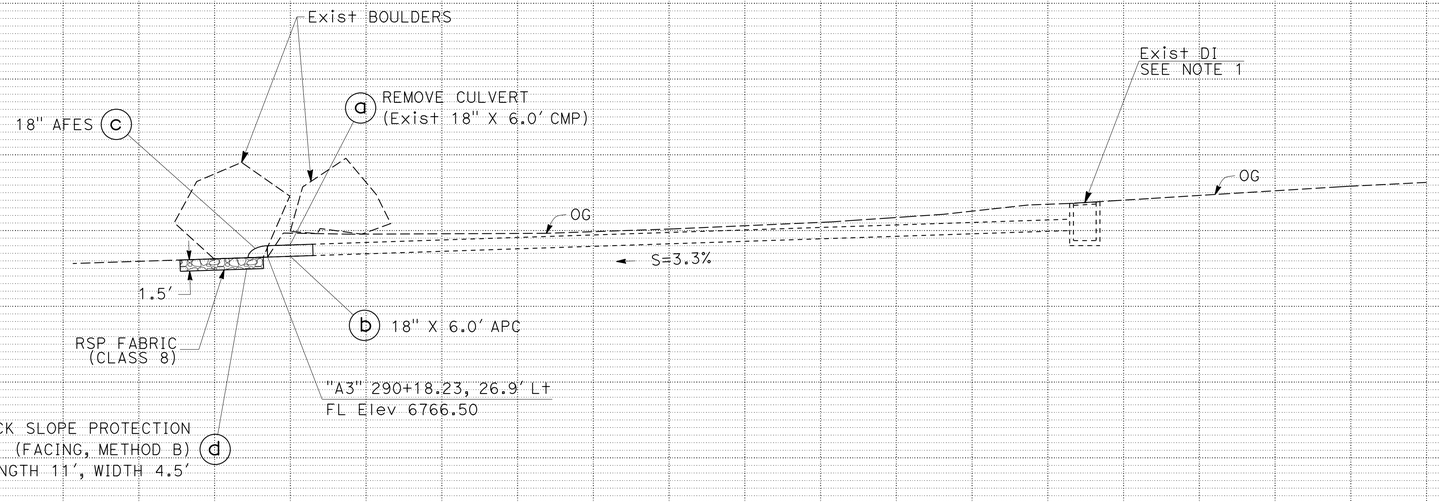

"A3" 290+06.28 TO "A3" 290+24.36 Lt

DRAINAGE SYSTEM No. 14

DRAINAGE PROFILES

SCALE: Horiz: 1" = 10'
Vert: 1" = 10'

DP-12

REVISED BY | DATE REVISED
HORACIO PARAS JR | FERMIN BARRIGA
CALCULATED-DESIGNED BY | CHECKED BY
FUNCTIONAL SUPERVISOR
CARLOS A. PORTILLO

STATE OF CALIFORNIA - DEPARTMENT OF TRANSPORTATION
NORTH REGION DIVISION OF ENGINEERING
Caltrans

LAST REVISION | DATE PLOTTED => 18-MAR-2015
04-29-14 | TIME PLOTTED => 15:09

BORDER LAST REVISED 7/2/2010 | USERNAME => s130875 | DGN FILE => 0300000224ib012.dgn | RELATIVE BORDER SCALE IS IN INCHES 0 1 2 3 | UNIT 0305 | PROJECT NUMBER & PHASE 03000002241

Dist	COUNTY	ROUTE	POST MILES TOTAL PROJECT	SHEET No.	TOTAL SHEETS
03	ED	89	13.8/18.0	76	164

Fermín Barriga B. 6-9-14
REGISTERED CIVIL ENGINEER DATE

6-16-14
PLANS APPROVAL DATE

REGISTERED PROFESSIONAL ENGINEER
FERMIN BARRIGA
No. C47047
Exp. 12-31-15
CIVIL
STATE OF CALIFORNIA

THE STATE OF CALIFORNIA OR ITS OFFICERS OR AGENTS SHALL NOT BE RESPONSIBLE FOR THE ACCURACY OR COMPLETENESS OF SCANNED COPIES OF THIS PLAN SHEET.

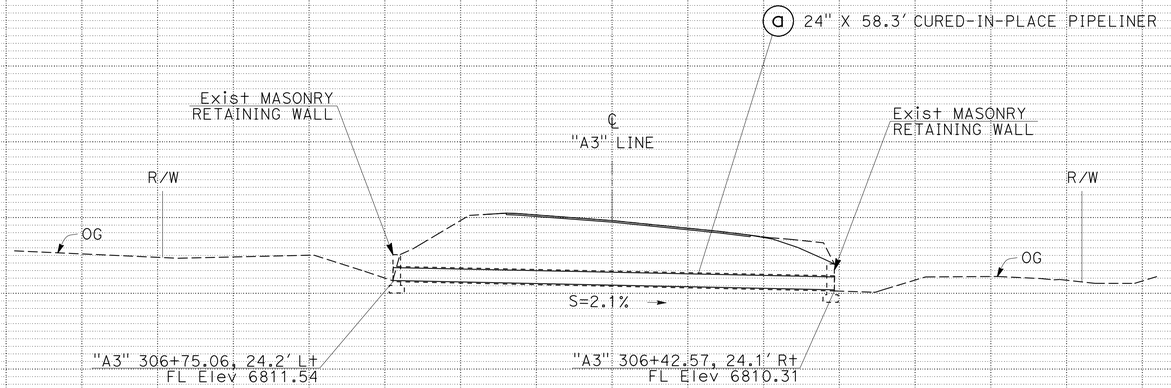

"A3" 306+59.58
SKEW 33° 49'01"

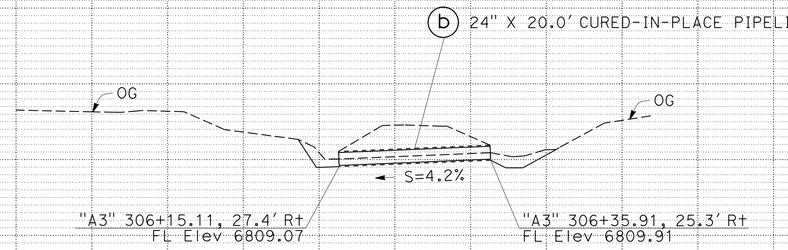

"A3" 306+15.11 TO "A3" 306+35.91 Rt

DRAINAGE SYSTEM No. 15

DRAINAGE PROFILES

SCALE: Horiz: 1" = 10'
Vert: 1" = 10'

DP-13

REVISED BY | DATE REVISED
CARMEN RODRIGUEZ | FERMIN BARRIGA
CALCULATED-DESIGNED BY | CHECKED BY
FUNCTIONAL SUPERVISOR: CARLOS A. PORTILLO

STATE OF CALIFORNIA - DEPARTMENT OF TRANSPORTATION
Caltrans
NORTH REGION
DIVISION OF ENGINEERING

LAST REVISION DATE PLOTTED => 18-MAR-2015
TIME PLOTTED => 15:09
06-05-14

BORDER LAST REVISED 7/2/2010
USERNAME => s130875
DGN FILE => 03000002241b013.dgn
RELATIVE BORDER SCALE IS IN INCHES 0 1 2 3
UNIT 0305
PROJECT NUMBER & PHASE 03000002241

Dist	COUNTY	ROUTE	POST MILES TOTAL PROJECT	SHEET No.	TOTAL SHEETS
03	ED	89	13.8/18.0	77	164

Fermin Barriga B. 6-9-14
REGISTERED CIVIL ENGINEER DATE

FERMIN BARRIGA No. C47047 Exp. 12-31-15 CIVIL — REGISTERED PROFESSIONAL ENGINEER — STATE OF CALIFORNIA

6-16-14
PLANS APPROVAL DATE

THE STATE OF CALIFORNIA OR ITS OFFICERS OR AGENTS SHALL NOT BE RESPONSIBLE FOR THE ACCURACY OR COMPLETENESS OF SCANNED COPIES OF THIS PLAN SHEET.

NOTES:

1. FOR ¼" CHECKERED PLATE COVER DETAILS NOT SHOWN, SEE Std PLAN D75A.

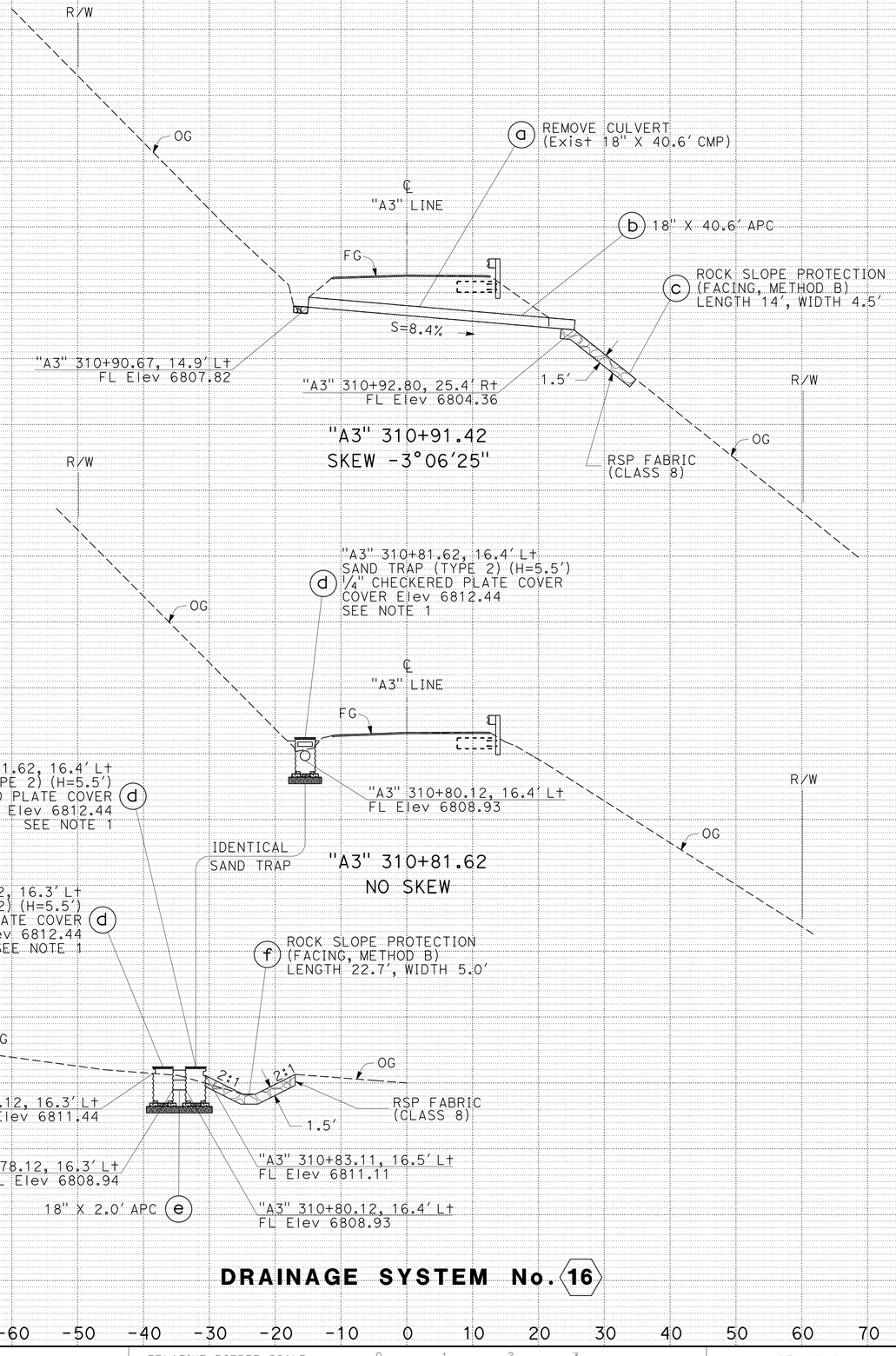

DRAINAGE SYSTEM No. 16

DRAINAGE PROFILES

SCALE: Horiz: 1" = 10'
Vert: 1" = 10'

DP-14

REVISED BY | DATE REVISED
JOSE LUIS VALDEZ | FERMIN BARRIGA
CALCULATED-DESIGNED BY | CHECKED BY
FUNCTIONAL SUPERVISOR: CARLOS A. PORTILLO

STATE OF CALIFORNIA - DEPARTMENT OF TRANSPORTATION
NORTH REGION DIVISION OF ENGINEERING
Caltrans

LAST REVISION | DATE PLOTTED => 18-MAR-2015
06-05-14 | TIME PLOTTED => 15:09

BORDER LAST REVISED 7/2/2010 | USERNAME => s130875 | DGN FILE => 0300000224ib014.dgn | RELATIVE BORDER SCALE IS IN INCHES 0 1 2 3 | UNIT 0305 | PROJECT NUMBER & PHASE 03000002241

Dist	COUNTY	ROUTE	POST MILES TOTAL PROJECT	SHEET No.	TOTAL SHEETS
03	ED	89	13.8/18.0	78	164

REGISTERED CIVIL ENGINEER — 6-9-14 DATE

FERMIN BARRIGA No. C47047 Exp. 12-31-15 CIVIL — REGISTERED PROFESSIONAL ENGINEER — STATE OF CALIFORNIA

6-16-14
PLANS APPROVAL DATE

THE STATE OF CALIFORNIA OR ITS OFFICERS OR AGENTS SHALL NOT BE RESPONSIBLE FOR THE ACCURACY OR COMPLETENESS OF SCANNED COPIES OF THIS PLAN SHEET.

NOTES:

1. FOR GRATE TYPE 36RX DETAILS NOT SHOWN, SEE Std PLAN D75A AND RSP D77B.
2. CONTRACTOR SHALL PROTECT IN PLACE Exist DRAINAGE INLET AND Exist 18" CMP.

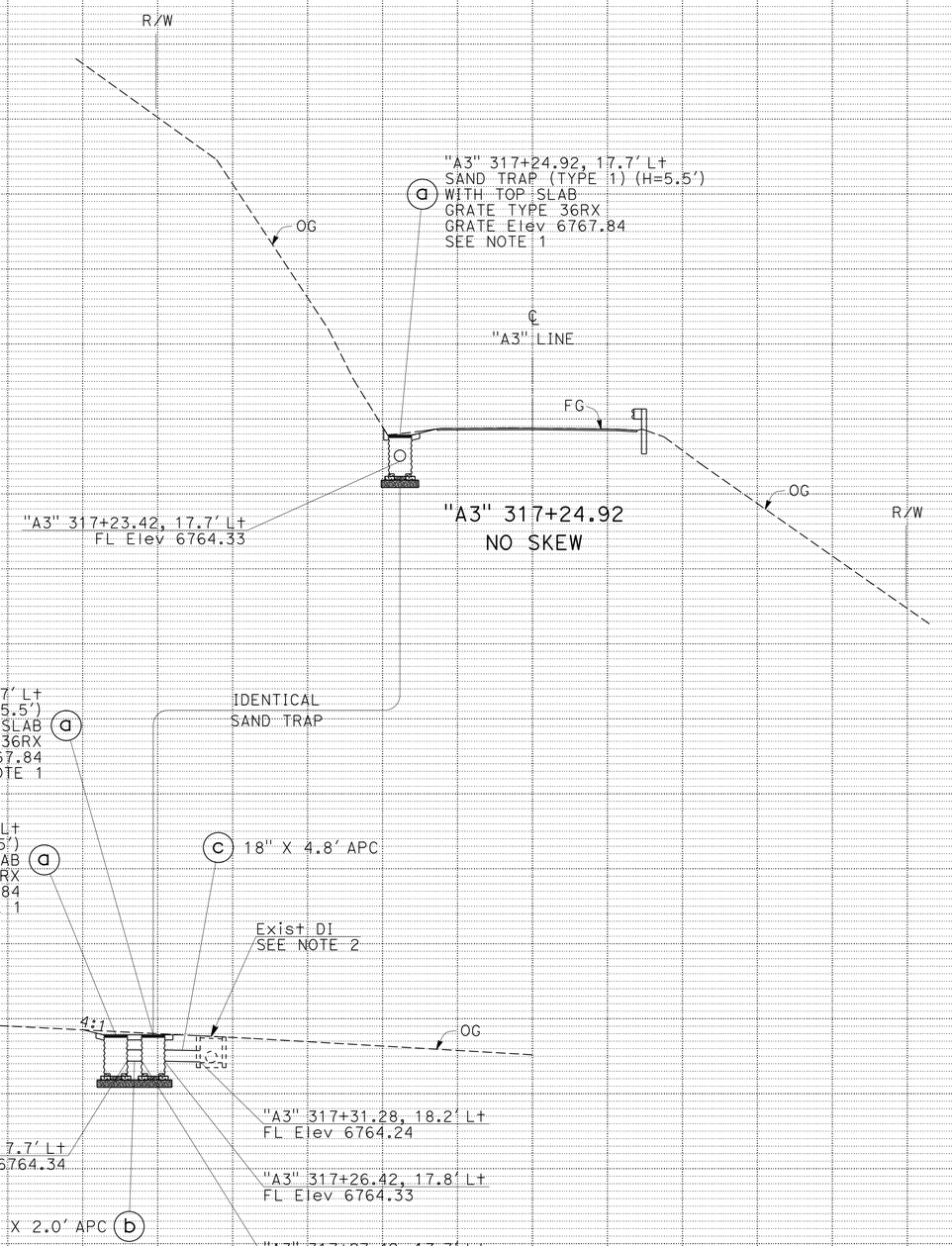

"A3" 317+17.33 TO "A3" 317+34.72 Lt

DRAINAGE SYSTEM No. 17

DRAINAGE PROFILES

SCALE: Horiz: 1" = 10'
Vert: 1" = 10'

DP-15

STATE OF CALIFORNIA - DEPARTMENT OF TRANSPORTATION
NORTH REGION
DIVISION OF ENGINEERING
Caltrans

FUNCTIONAL SUPERVISOR: CARLOS A. PORTILLO
CALCULATED-DESIGNED BY:
CHECKED BY: FERMIN BARRIGA
REVISED BY:
DATE REVISED:
JOSE LUIS VALDEZ

LAST REVISION DATE PLOTTED => 18-MAR-2015
TIME PLOTTED => 15:09
06-05-14

BORDER LAST REVISED 7/2/2010
USERNAME => s130875
DGN FILE => 03000002241ib015.dgn
RELATIVE BORDER SCALE IS IN INCHES 0 1 2 3
UNIT 0305
PROJECT NUMBER & PHASE 03000002241

Dist	COUNTY	ROUTE	POST MILES TOTAL PROJECT	SHEET No.	TOTAL SHEETS
03	ED	89	13.8/18.0	79	164

Fermin Barriga B. 6-9-14
REGISTERED CIVIL ENGINEER DATE

6-16-14
PLANS APPROVAL DATE

FERMIN BARRIGA No. C47046 Exp. 12-31-15 CIVIL — REGISTERED PROFESSIONAL ENGINEER — STATE OF CALIFORNIA

THE STATE OF CALIFORNIA OR ITS OFFICERS OR AGENTS SHALL NOT BE RESPONSIBLE FOR THE ACCURACY OR COMPLETENESS OF SCANNED COPIES OF THIS PLAN SHEET.

REVISED BY | DATE REVISED

JOSE LUIS VALDEZ | FERMIN BARRIGA

CALCULATED-DESIGNED BY | CHECKED BY

FUNCTIONAL SUPERVISOR: CARLOS A. PORTILLO

STATE OF CALIFORNIA - DEPARTMENT OF TRANSPORTATION
NORTH REGION
DIVISION OF ENGINEERING
Caltrans

NOTES:

1. FOR 1/4" CHECKERED PLATE COVER DETAILS NOT SHOWN, SEE Std PLAN D75A.
2. FOR DRAINAGE SYSTEM No. 18i, SEE DRAINAGE PROFILES SHEET DP-16.

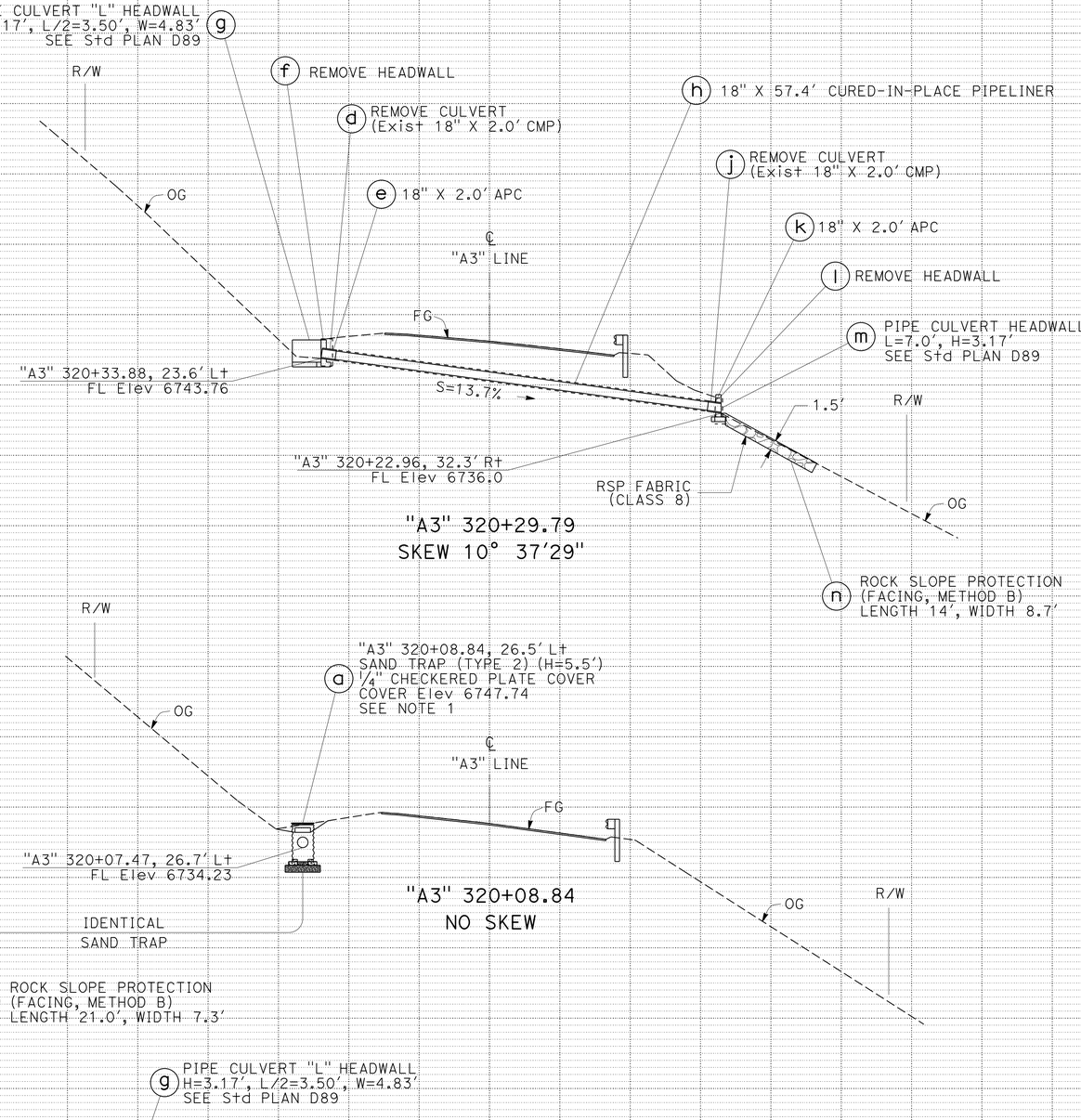

DRAINAGE PROFILES

SCALE: Horiz: 1" = 10'
Vert: 1" = 10'

DP-16

LAST REVISION DATE PLOTTED => 18-MAR-2015
TIME PLOTTED => 15:09
06-05-14

Dist	COUNTY	ROUTE	POST MILES TOTAL PROJECT	SHEET No.	TOTAL SHEETS
03	ED	89	13.8/18.0	80	164

Fermin Barriga B. 6-9-14
REGISTERED CIVIL ENGINEER DATE

6-16-14
PLANS APPROVAL DATE

FERMIN BARRIGA No. C47047 Exp. 12-31-15 CIVIL — REGISTERED PROFESSIONAL ENGINEER — STATE OF CALIFORNIA

THE STATE OF CALIFORNIA OR ITS OFFICERS OR AGENTS SHALL NOT BE RESPONSIBLE FOR THE ACCURACY OR COMPLETENESS OF SCANNED COPIES OF THIS PLAN SHEET.

NOTES:

1. FOR ADDITIONAL Mod HMA OVERSIDE DRAIN INFORMATION, SEE LAYOUT SHEET L-10 AND CONSTRUCTION DETAILS SHEET C-24.
2. FOR PCC APRON DETAILS, SEE DRAINAGE DETAILS SHEET DD-6.
2. FOR DRAINAGE SYSTEM No. 19d, SEE DRAINAGE PROFILES SHEET DP-17.

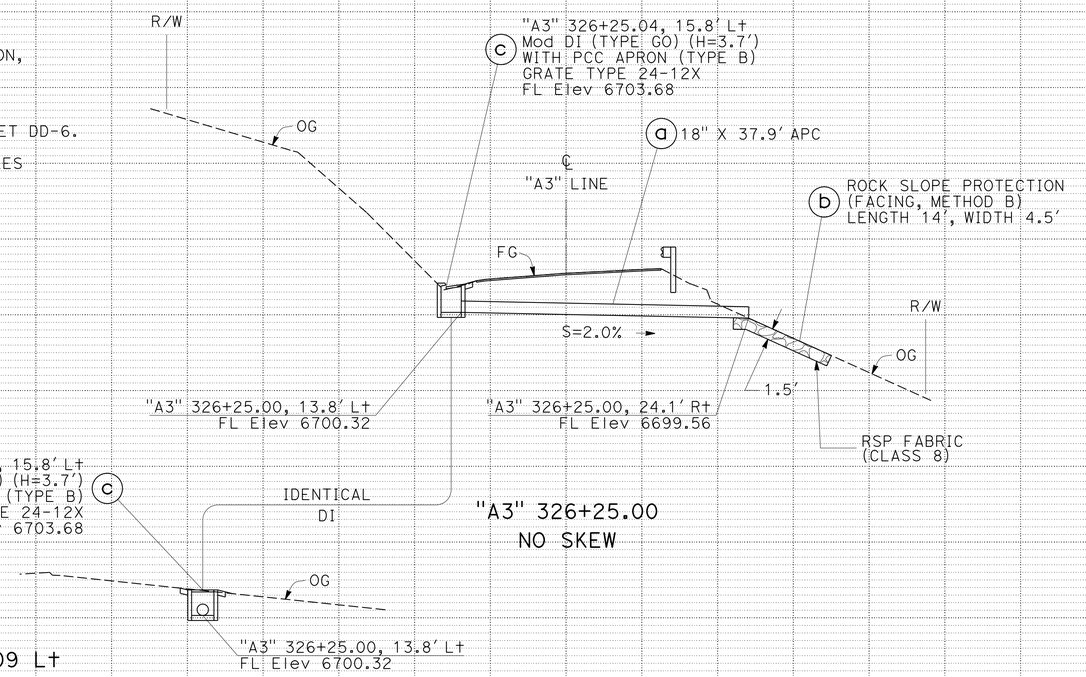

DRAINAGE SYSTEM No. 19

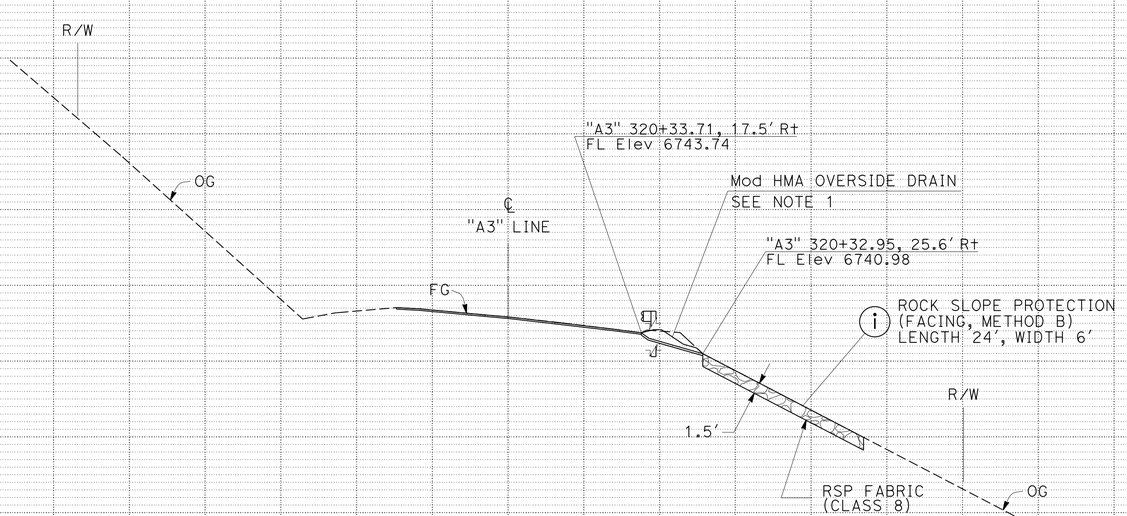

DRAINAGE SYSTEM No. 18

"A3" 320+35.21
SKEW 4°35'58"

DRAINAGE PROFILES

SCALE: Horiz: 1" = 10'
Vert: 1" = 10'

DP-17

REVISED BY | DATE REVISED
HORACIO PARAS JR | FERMIN BARRIGA
CALCULATED-DESIGNED BY | CHECKED BY
FUNCTIONAL SUPERVISOR: CARLOS A. PORTILLO

STATE OF CALIFORNIA - DEPARTMENT OF TRANSPORTATION
Caltrans
NORTH REGION
DIVISION OF ENGINEERING

LAST REVISION | DATE PLOTTED => 18-MAR-2015
06-05-14 | TIME PLOTTED => 15:09

BORDER LAST REVISED 7/2/2010 | USERNAME => s130875 | DGN FILE => 0300000224ib017.dgn | RELATIVE BORDER SCALE IS IN INCHES 0 1 2 3 | UNIT 0305 | PROJECT NUMBER & PHASE 03000002241

Dist	COUNTY	ROUTE	POST MILES TOTAL PROJECT	SHEET No.	TOTAL SHEETS
03	ED	89	13.8/18.0	81	164

Fermin Barriga B. 6-9-14
REGISTERED CIVIL ENGINEER DATE

FERMIN BARRIGA No. C47047 Exp. 12-31-15 CIVIL — REGISTERED PROFESSIONAL ENGINEER — STATE OF CALIFORNIA

6-16-14
PLANS APPROVAL DATE

THE STATE OF CALIFORNIA OR ITS OFFICERS OR AGENTS SHALL NOT BE RESPONSIBLE FOR THE ACCURACY OR COMPLETENESS OF SCANNED COPIES OF THIS PLAN SHEET.

NOTES:

1. CONTRACTOR SHALL PROTECT IN PLACE Exist DRAINAGE INLET.

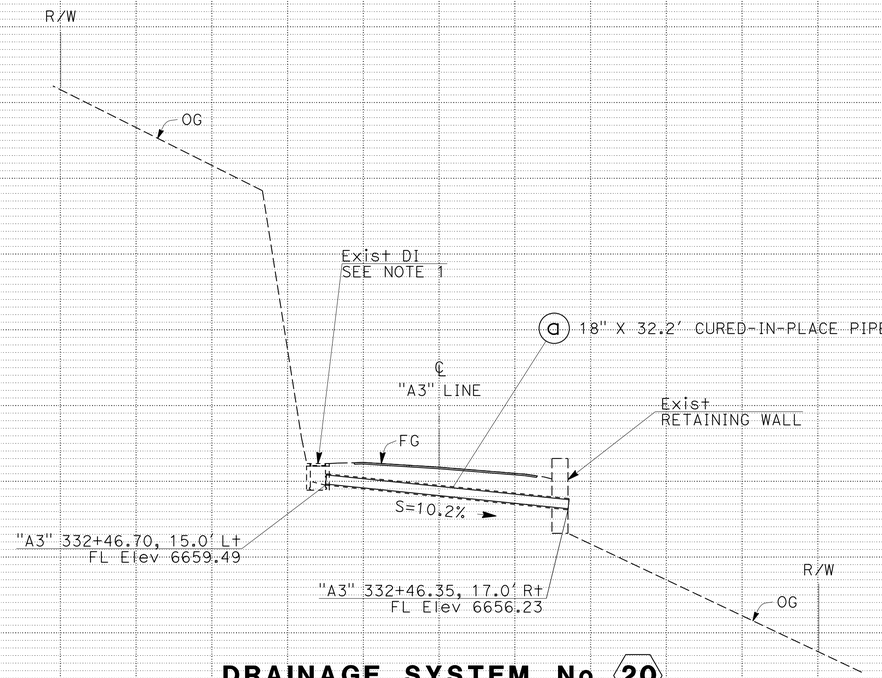

DRAINAGE SYSTEM No. 20

"A3" 332+46.36
SKEW 2°37'34"

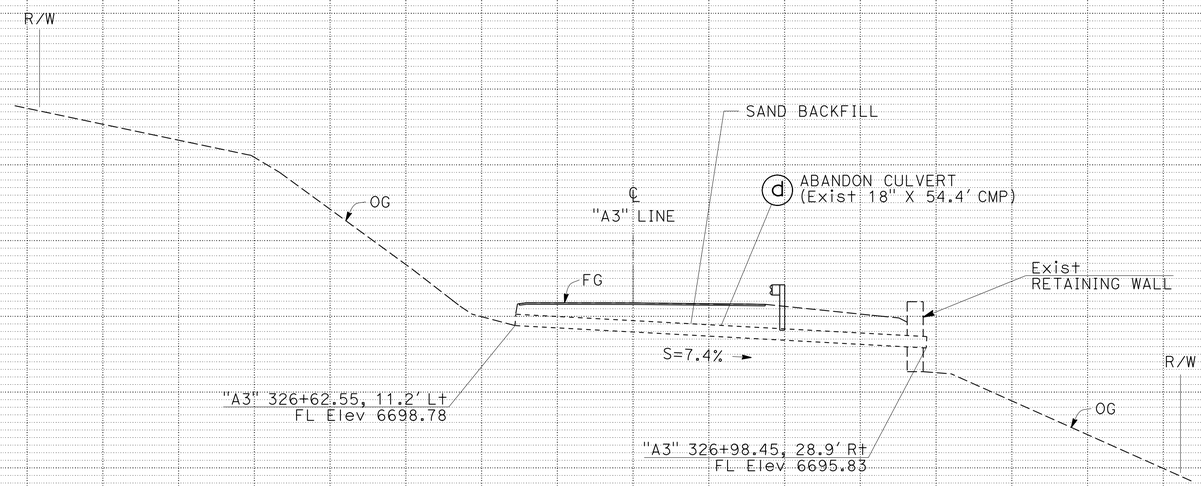

DRAINAGE SYSTEM No. 19

"A3" 326+73.48
SKEW -43°12'15"

DRAINAGE PROFILES

SCALE: Horiz: 1" = 10'
Vert: 1" = 10'

DP-18

-140 -130 -120 -110 -100 -90 -80 -70 -60 -50 -40 -30 -20 -10 0 10 20 30 40 50 60 70

6680 6675 6670 6665 6660 6655 6650 6645 6640 6710 6705 6700 6695 6690 6685 6680

STATE OF CALIFORNIA - DEPARTMENT OF TRANSPORTATION
Caltrans
NORTH REGION
DIVISION OF ENGINEERING
FUNCTIONAL SUPERVISOR: CARLOS A. PORTILLO
CALCULATED-DESIGNED BY: JOSE LUIS VALDEZ
CHECKED BY: FERMIN BARRIGA
REVISED BY
DATE REVISED

LAST REVISION DATE PLOTTED => 18-MAR-2015
06-05-14 TIME PLOTTED => 15:09

BORDER LAST REVISED 7/2/2010 | USERNAME => s130875 | DGN FILE => 03000002241ib018.dgn | RELATIVE BORDER SCALE IS IN INCHES 0 1 2 3 | UNIT 0305 | PROJECT NUMBER & PHASE 03000002241

Dist	COUNTY	ROUTE	POST MILES TOTAL PROJECT	SHEET No.	TOTAL SHEETS
03	ED	89	13.8/18.0	82	164

Fermin Barriga B. 6-9-14
REGISTERED CIVIL ENGINEER DATE

6-16-14
PLANS APPROVAL DATE

REGISTERED PROFESSIONAL ENGINEER
FERMIN BARRIGA
No. C47047
Exp. 12-31-15
CIVIL
STATE OF CALIFORNIA

THE STATE OF CALIFORNIA OR ITS OFFICERS OR AGENTS SHALL NOT BE RESPONSIBLE FOR THE ACCURACY OR COMPLETENESS OF SCANNED COPIES OF THIS PLAN SHEET.

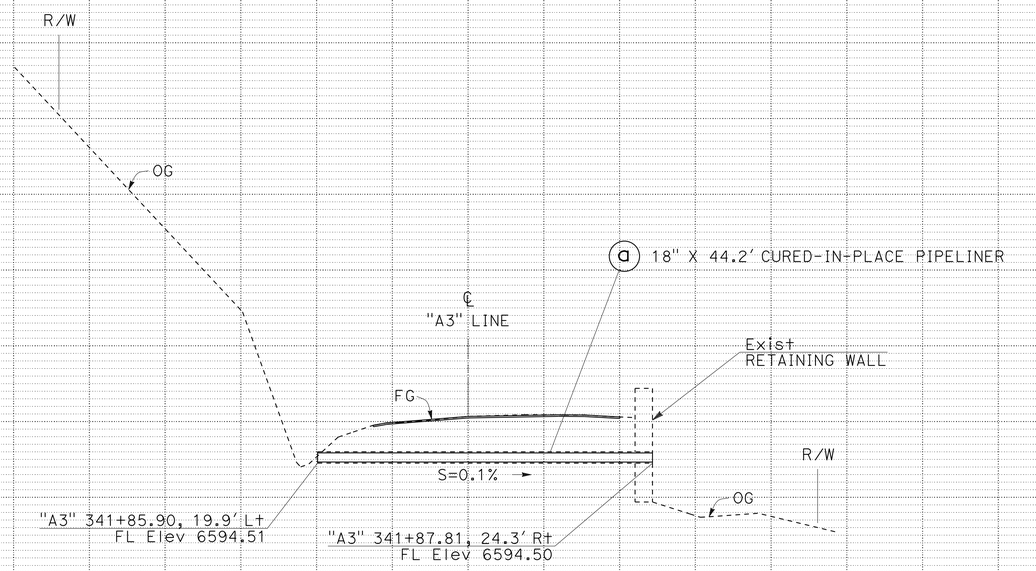

DRAINAGE SYSTEM No. 22

"A3" 341+86.75
SKEW -2°28'31"

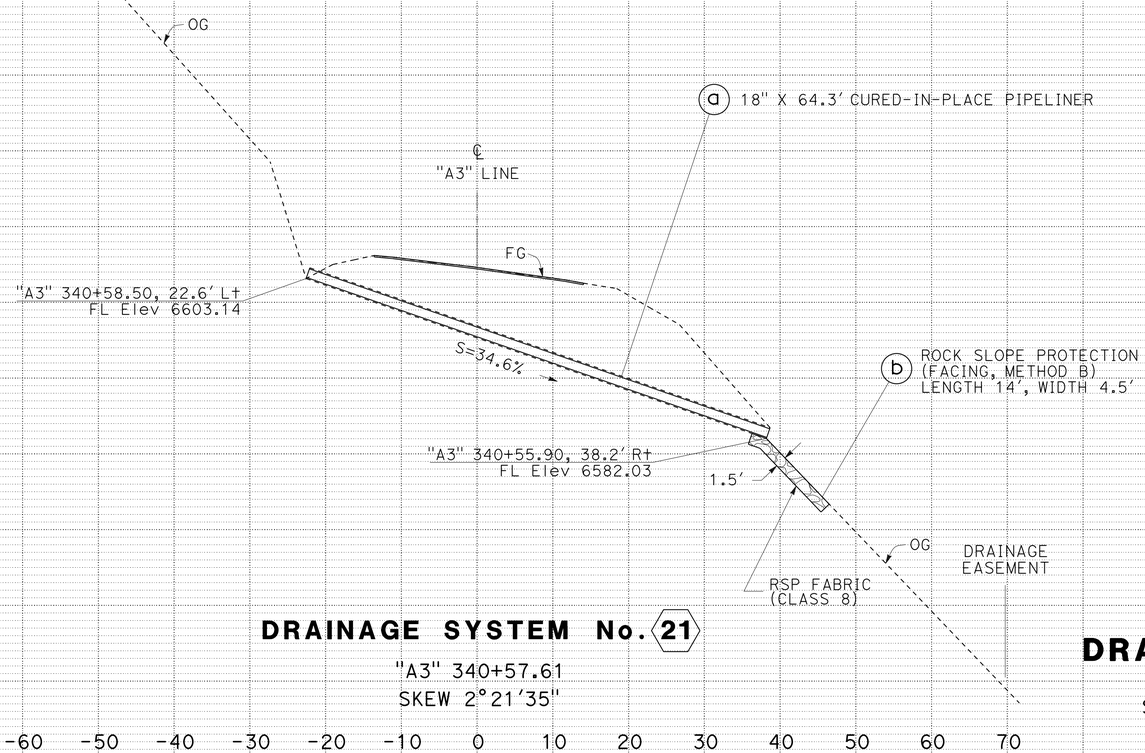

DRAINAGE SYSTEM No. 21

"A3" 340+57.61
SKEW 2°21'35"

DRAINAGE PROFILES

SCALE: Horiz: 1" = 10'
Vert: 1" = 10'

DP-19

REVISED BY | DATE REVISED
JOSE LUIS VALDEZ | FERMIN BARRIGA
CALCULATED-DESIGNED BY | CHECKED BY
FUNCTIONAL SUPERVISOR: CARLOS A. PORTILLO
STATE OF CALIFORNIA - DEPARTMENT OF TRANSPORTATION
Caltrans®
NORTH REGION
DIVISION OF ENGINEERING

LAST REVISION DATE PLOTTED => 18-MAR-2015
06-05-14 TIME PLOTTED => 15:09

BORDER LAST REVISED 7/2/2010 | USERNAME => s130875 | DGN FILE => 03000000224ib019.dgn | RELATIVE BORDER SCALE IS IN INCHES 0 1 2 3 | UNIT 0305 | PROJECT NUMBER & PHASE 03000002241

Dist	COUNTY	ROUTE	POST MILES TOTAL PROJECT	SHEET No.	TOTAL SHEETS
03	ED	89	13.8/18.0	83	164

Fermin Barriga 6-9-14
REGISTERED CIVIL ENGINEER DATE

FERMIN BARRIGA No. C47047 Exp. 12-31-15 CIVIL — REGISTERED PROFESSIONAL ENGINEER — STATE OF CALIFORNIA

6-16-14
PLANS APPROVAL DATE

THE STATE OF CALIFORNIA OR ITS OFFICERS OR AGENTS SHALL NOT BE RESPONSIBLE FOR THE ACCURACY OR COMPLETENESS OF SCANNED COPIES OF THIS PLAN SHEET.

NOTES:

1. FOR GRATE TYPE 36RX DETAILS NOT SHOWN, SEE Std PLAN D75A AND RSP D77B.
2. FOR CONCRETE BACKFILL (PIPE TRENCH) DETAILS, SEE DRAINAGE DETAILS SHEET DD-3.

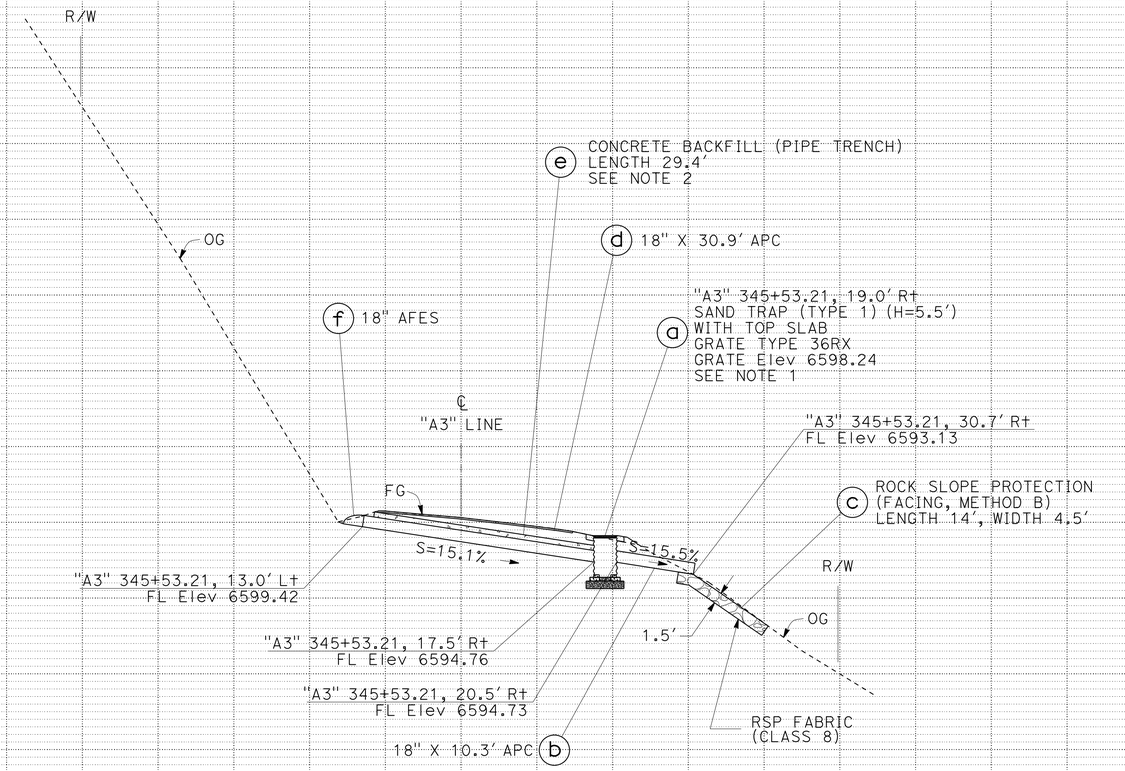

DRAINAGE SYSTEM No. 24

"A3" 345+53.21
NO SKEW

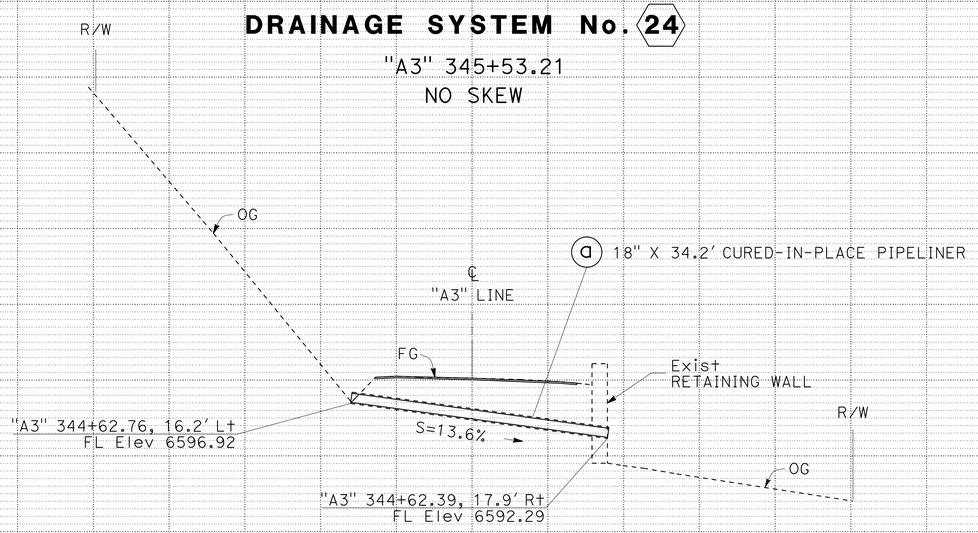

DRAINAGE SYSTEM No. 23

"A3" 344+62.59
SKEW 0°37′17"

DRAINAGE PROFILES

SCALE: Horiz: 1" = 10′
Vert: 1" = 10′

DP-20

6620 6615 6610 6605 6600 6595 6590

-140 -130 -120 -110 -100 -90 -80 -70 -60 -50 -40 -30 -20 -10 0 10 20 30 40 50 60 70

REVISED BY | DATE REVISED

CALCULATED-DESIGNED BY: JOSE LUIS VALDEZ
CHECKED BY: FERMIN BARRIGA
FUNCTIONAL SUPERVISOR: CARLOS A. PORTILLO

STATE OF CALIFORNIA - DEPARTMENT OF TRANSPORTATION
NORTH REGION
DIVISION OF ENGINEERING
Caltrans

LAST REVISION DATE PLOTTED => 18-MAR-2015
TIME PLOTTED => 15:09
06-05-14

BORDER LAST REVISED 7/2/2010 | USERNAME => s130875 | DGN FILE => 03000002241ib020.dgn | RELATIVE BORDER SCALE IS IN INCHES 0 1 2 3 | UNIT 0305 | PROJECT NUMBER & PHASE 03000002241

Dist	COUNTY	ROUTE	POST MILES TOTAL PROJECT	SHEET No.	TOTAL SHEETS
03	ED	89	13.8/18.0	84	164

Fermin Barriga 6-9-14
REGISTERED CIVIL ENGINEER DATE

6-16-14
PLANS APPROVAL DATE

FERMIN BARRIGA No. C47047 Exp. 12-31-15 CIVIL — REGISTERED PROFESSIONAL ENGINEER — STATE OF CALIFORNIA

THE STATE OF CALIFORNIA OR ITS OFFICERS OR AGENTS SHALL NOT BE RESPONSIBLE FOR THE ACCURACY OR COMPLETENESS OF SCANNED COPIES OF THIS PLAN SHEET.

NOTES:

1. FOR GRATE TYPE 36RX DETAILS NOT SHOWN, SEE Std PLAN D75A AND RSP D77B.

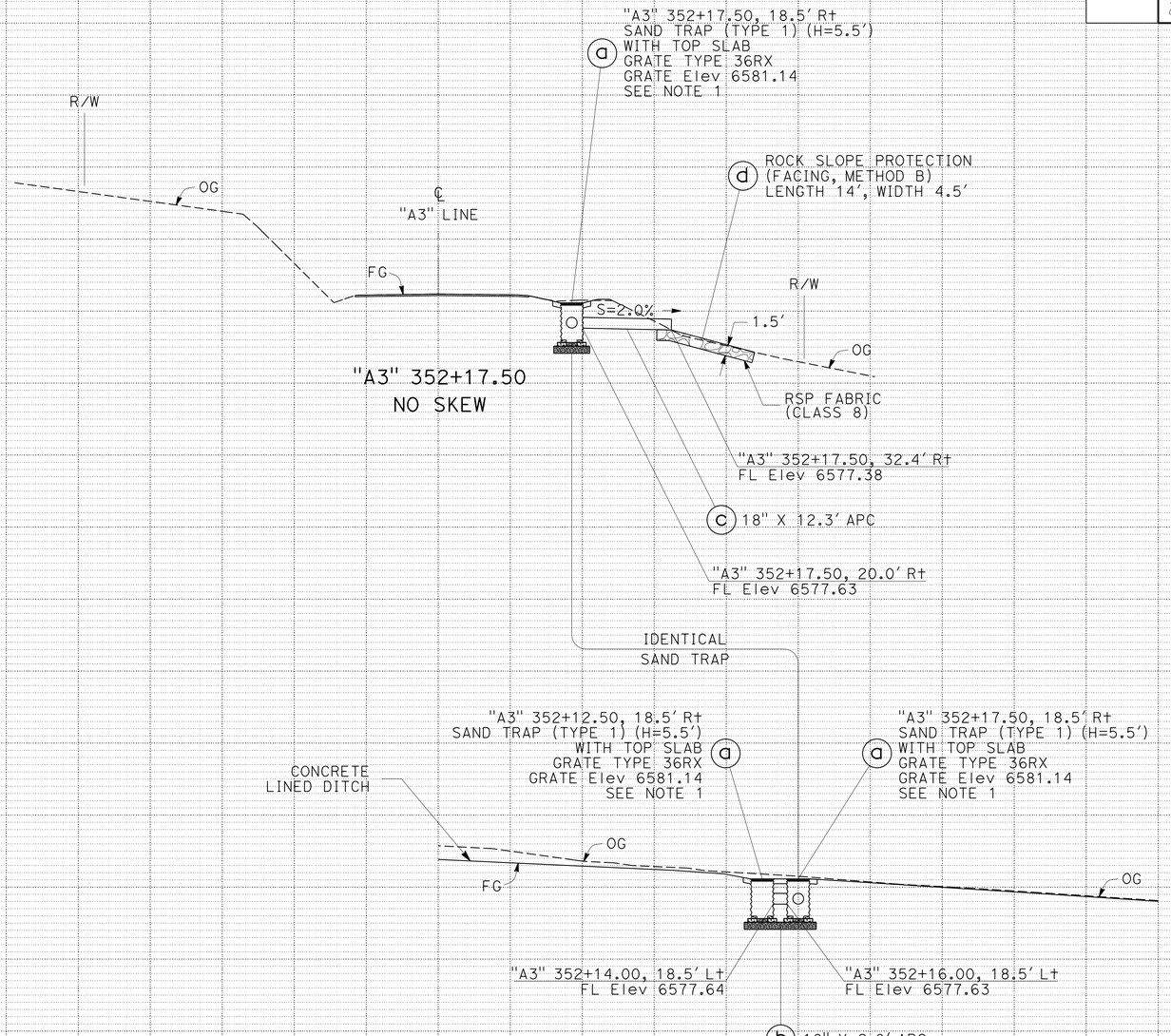

DRAINAGE SYSTEM No. 25

DRAINAGE PROFILES

SCALE: Horiz: 1" = 10'
Vert: 1" = 10'

DP-21

REVISED BY | DATE REVISED
FERMIN BARRIGA | FERMIN BARRIGA
CALCULATED-DESIGNED BY | CHECKED BY

FUNCTIONAL SUPERVISOR: CARLOS A. PORTILLO

STATE OF CALIFORNIA - DEPARTMENT OF TRANSPORTATION
NORTH REGION
DIVISION OF ENGINEERING
Caltrans

LAST REVISION | DATE PLOTTED => 18-MAR-2015
06-06-14 | TIME PLOTTED => 15:09

BORDER LAST REVISED 7/2/2010 | USERNAME => s130875 | DGN FILE => 0300000224ib021.dgn | RELATIVE BORDER SCALE IS IN INCHES 0 1 2 3 | UNIT 0305 | PROJECT NUMBER & PHASE 03000002241

Dist	COUNTY	ROUTE	POST MILES TOTAL PROJECT	SHEET No.	TOTAL SHEETS
03	ED	89	13.8/18.0	85	164

Fermin Barriga B. 6-9-14
REGISTERED CIVIL ENGINEER DATE

6-16-14
PLANS APPROVAL DATE

REGISTERED PROFESSIONAL ENGINEER
FERMIN BARRIGA
No. C47047
Exp. 12-31-15
CIVIL
STATE OF CALIFORNIA

THE STATE OF CALIFORNIA OR ITS OFFICERS OR AGENTS SHALL NOT BE RESPONSIBLE FOR THE ACCURACY OR COMPLETENESS OF SCANNED COPIES OF THIS PLAN SHEET.

NOTES:

1. FOR 1/4" CHECKERED PLATE COVER DETAILS NOT SHOWN, SEE Std PLAN D75A.

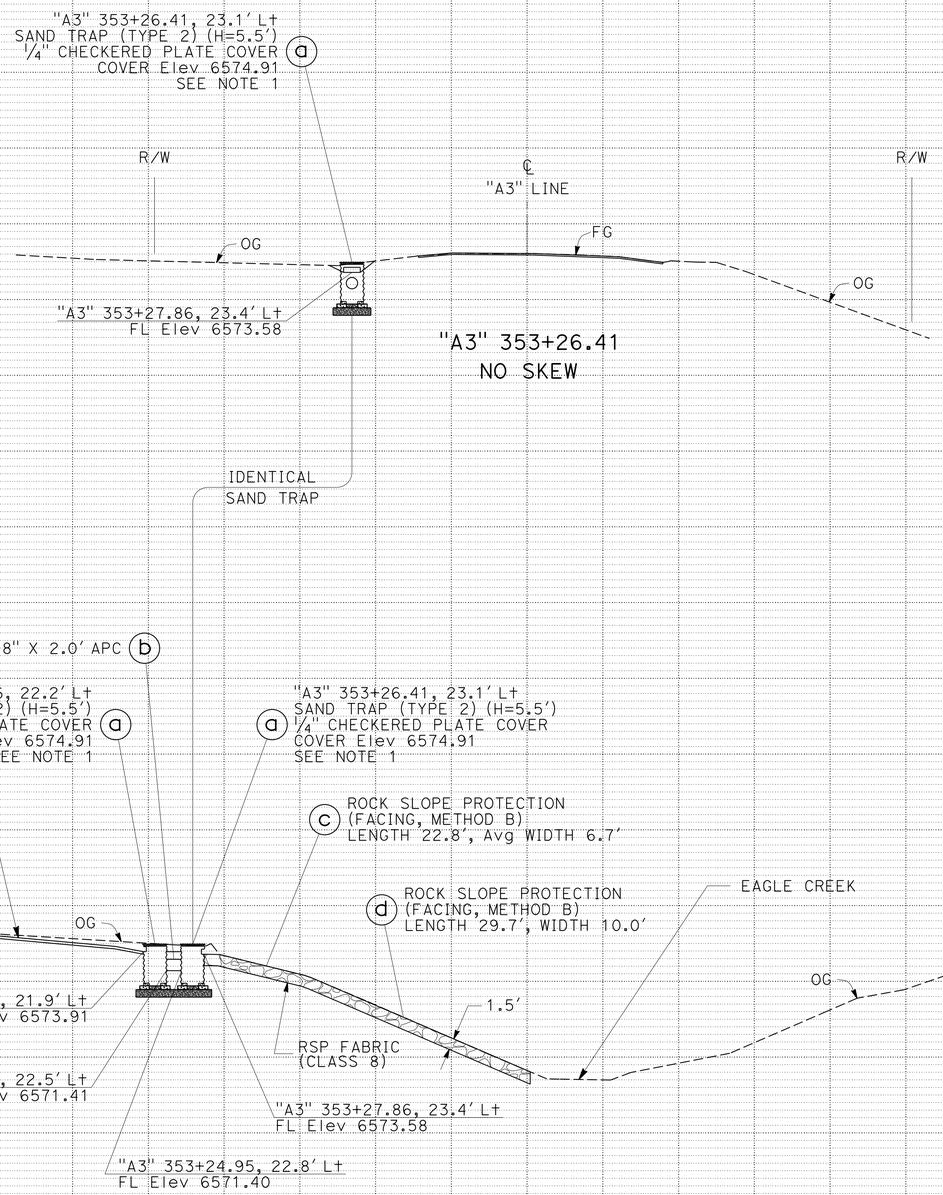

DRAINAGE SYSTEM No. 26

DRAINAGE PROFILES

SCALE: Horiz: 1" = 10'
Vert: 1" = 10'

DP-22

REVISED BY | DATE REVISED
JOSE LUIS VALDEZ | FERMIN BARRIGA
CALCULATED-DESIGNED BY | CHECKED BY
FUNCTIONAL SUPERVISOR: CARLOS A. PORTILLO

STATE OF CALIFORNIA - DEPARTMENT OF TRANSPORTATION
NORTH REGION
DIVISION OF ENGINEERING

LAST REVISION | DATE PLOTTED => 18-MAR-2015
06-05-14 | TIME PLOTTED => 15:09

BORDER LAST REVISED 7/2/2010 | USERNAME => s130875 | DGN FILE => 03000002241ib022.dgn | RELATIVE BORDER SCALE IS IN INCHES 0 1 2 3 | UNIT 0305 | PROJECT NUMBER & PHASE 03000002241

Dist	COUNTY	ROUTE	POST MILES TOTAL PROJECT	SHEET No.	TOTAL SHEETS
03	ED	89	13.8/18.0	86	164

Fermin Barriga B. 6-9-14
REGISTERED CIVIL ENGINEER DATE

FERMIN BARRIGA No. C47047 Exp. 12-31-15 CIVIL — REGISTERED PROFESSIONAL ENGINEER — STATE OF CALIFORNIA

6-16-14
PLANS APPROVAL DATE

THE STATE OF CALIFORNIA OR ITS OFFICERS OR AGENTS SHALL NOT BE RESPONSIBLE FOR THE ACCURACY OR COMPLETENESS OF SCANNED COPIES OF THIS PLAN SHEET.

REVISED BY | DATE REVISED

JOSE LUIS VALDEZ | FERMIN BARRIGA

CALCULATED-DESIGNED BY | CHECKED BY

FUNCTIONAL SUPERVISOR: CARLOS A. PORTILLO

STATE OF CALIFORNIA - DEPARTMENT OF TRANSPORTATION
NORTH REGION
DIVISION OF ENGINEERING

Caltrans®

NOTES:

1. FOR PCC APRON DETAILS, SEE DRAINAGE DETAILS SHEETS DD-6 AND DD-7.
2. CONTRACTOR SHALL PROTECT IN PLACE Exist DRAINAGE INLET.
3. FOR CONCRETE BACKFILL (PIPE TRENCH) DETAILS, SEE DRAINAGE DETAILS SHEET DD-3.

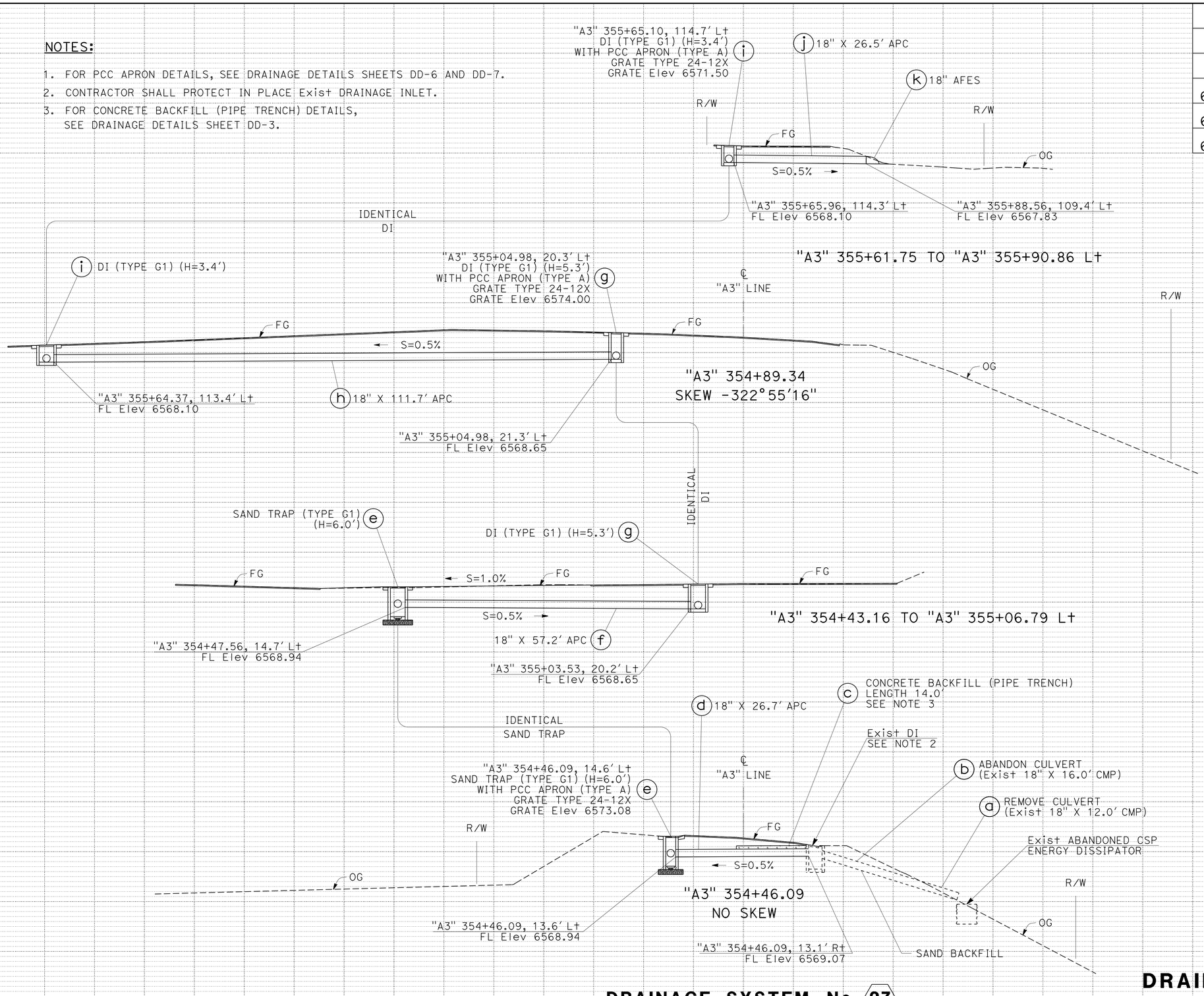

DRAINAGE SYSTEM No. 27

DRAINAGE PROFILES

SCALE: Horiz: 1" = 10'
Vert: 1" = 10'

DP-23

LAST REVISION | DATE PLOTTED => 18-MAR-2015
06-05-14 | TIME PLOTTED => 15:09

BORDER LAST REVISED 7/2/2010 | USERNAME => s130875 | DGN FILE => 03000002241ib023.dgn | RELATIVE BORDER SCALE IS IN INCHES 0 1 2 3 | UNIT 0305 | PROJECT NUMBER & PHASE 03000002241

Dist	COUNTY	ROUTE	POST MILES TOTAL PROJECT	SHEET No.	TOTAL SHEETS
03	ED	89	13.8/18.0	87	164

REGISTERED CIVIL ENGINEER — 6-9-14 DATE

6-16-14
PLANS APPROVAL DATE

FERMIN BARRIGA No. C47047 Exp. 12-31-15 CIVIL — REGISTERED PROFESSIONAL ENGINEER — STATE OF CALIFORNIA

THE STATE OF CALIFORNIA OR ITS OFFICERS OR AGENTS SHALL NOT BE RESPONSIBLE FOR THE ACCURACY OR COMPLETENESS OF SCANNED COPIES OF THIS PLAN SHEET.

NOTES:

1. FOR GRATE TYPE 36RX DETAILS NOT SHOWN, SEE Std PLAN D75A AND RSP D77B.
2. FOR PCC APRON DETAILS, SEE DRAINAGE DETAILS SHEETS DD-6 AND DD-7.

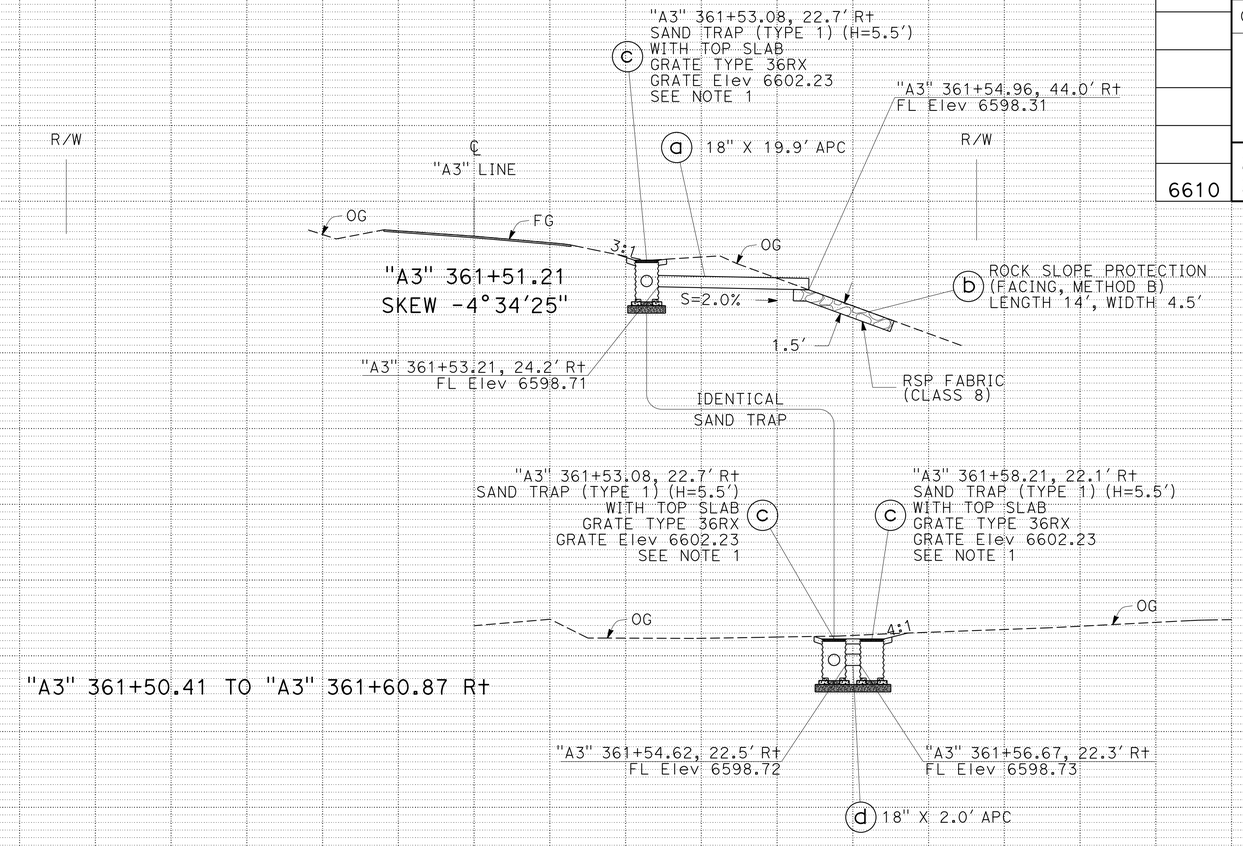

DRAINAGE SYSTEM No. 29

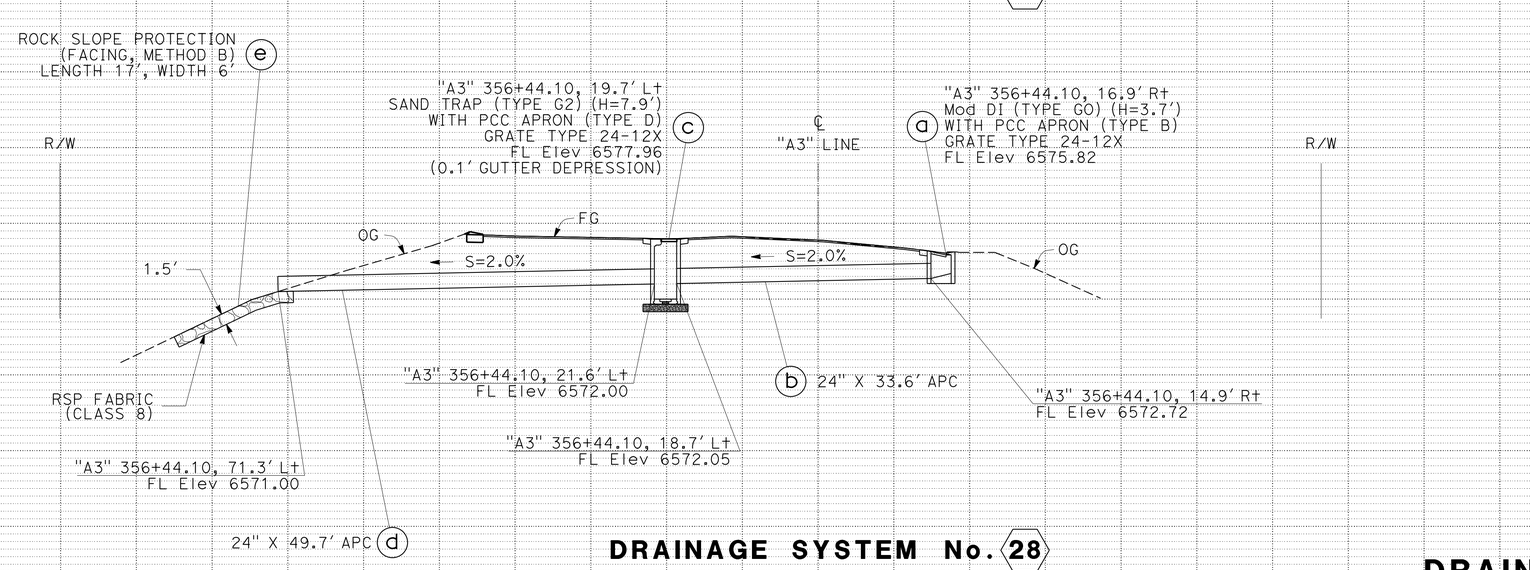

DRAINAGE SYSTEM No. 28

"A3" 356+44.10
NO SKEW

DRAINAGE PROFILES

SCALE: Horiz: 1" = 10'
Vert: 1" = 10'

DP-24

FERMIN BARRIGA — REVISED BY
DATE REVISED
FERMIN BARRIGA — CALCULATED-DESIGNED BY
CHECKED BY
CARLOS A. PORTILLO — FUNCTIONAL SUPERVISOR

STATE OF CALIFORNIA - DEPARTMENT OF TRANSPORTATION
Caltrans
NORTH REGION
DIVISION OF ENGINEERING

LAST REVISION DATE PLOTTED => 18-MAR-2015
06-05-14 TIME PLOTTED => 15:09

BORDER LAST REVISED 7/2/2010 | USERNAME => s130875 | DGN FILE => 03000000224ib024.dgn | RELATIVE BORDER SCALE IS IN INCHES 0 1 2 3 | UNIT 0305 | PROJECT NUMBER & PHASE 03000002241

Dist	COUNTY	ROUTE	POST MILES TOTAL PROJECT	SHEET No.	TOTAL SHEETS
03	ED	89	13.8/18.0	88	164

Fermin Barriga B. 6-9-14
REGISTERED CIVIL ENGINEER DATE

6-16-14
PLANS APPROVAL DATE

REGISTERED PROFESSIONAL ENGINEER — FERMIN BARRIGA No. C47047 Exp. 12-31-15 CIVIL — STATE OF CALIFORNIA

THE STATE OF CALIFORNIA OR ITS OFFICERS OR AGENTS SHALL NOT BE RESPONSIBLE FOR THE ACCURACY OR COMPLETENESS OF SCANNED COPIES OF THIS PLAN SHEET.

NOTES:

1. FOR DETAILS NOT SHOWN, SEE Std PLAN D75A AND RSP D77B.
2. OUTLET OPENING MAY BE CULVERT (AS SHOWN ON DRAINAGE PROFILE SHEETS).
3. SEE DRAINAGE PROFILES FOR FLOWLINE ELEVATIONS, INLET TYPE AND "H", AND GRATE STATION, OFFSET AND ELEVATION.
4. LIFTING ROD AND WIRE CLOTH SHALL BE TYPE 316 OR 304 STAINLESS STEEL.

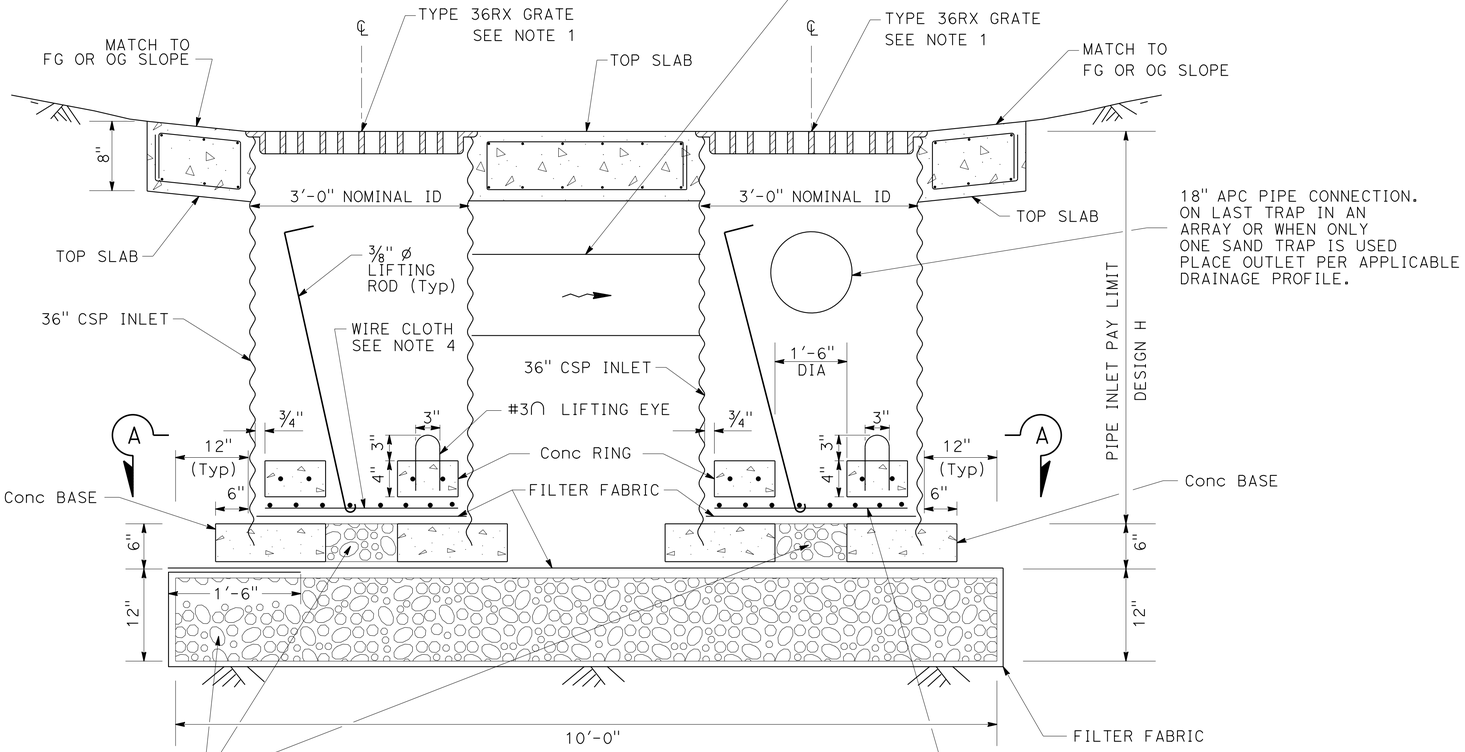

SAND TRAP (TYPE 1)

DRAINAGE SYSTEM No. 11-b 17-a 24-a 25-a 29-c

SECTION A-A

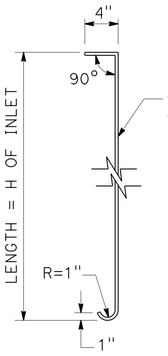

LIFTING ROD

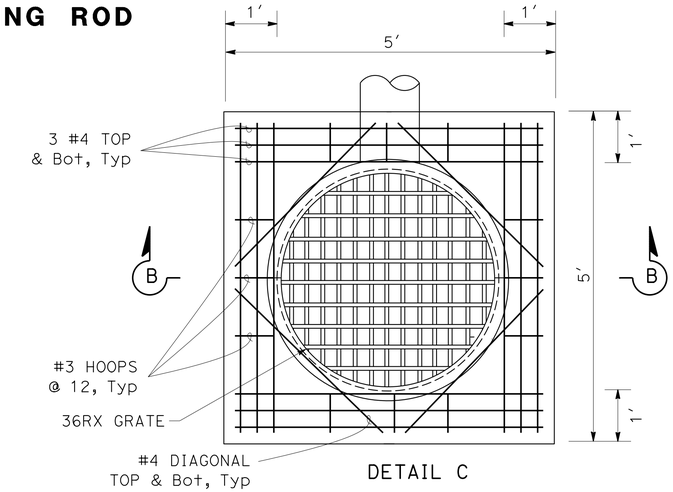

DETAIL C

SAND TRAP WITH TOP SLAB

DRAINAGE SYSTEM No. 17-a 24-a 25-a 29-c

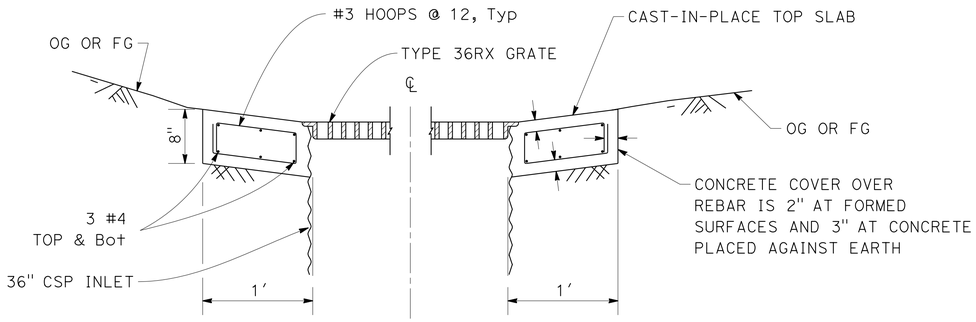

SECTION B-B

DRAINAGE DETAILS

NO SCALE

DD-1

STATE OF CALIFORNIA - DEPARTMENT OF TRANSPORTATION
NORTH REGION
DIVISION OF ENGINEERING
Caltrans

FUNCTIONAL SUPERVISOR: CARLOS A. PORTILLO
CALCULATED-DESIGNED BY: JOSE LUIS VALDEZ
CHECKED BY: FERMIN BARRIGA
REVISED BY
DATE REVISED

LAST REVISION DATE PLOTTED => 18-MAR-2015
06-03-14 TIME PLOTTED => 15:09

BORDER LAST REVISED 7/2/2010 | USERNAME => s130875 | DGN FILE => 0300000224ic001.dgn | RELATIVE BORDER SCALE IS IN INCHES 0 1 2 3 | UNIT 0305 | PROJECT NUMBER & PHASE 03000002241

Dist	COUNTY	ROUTE	POST MILES TOTAL PROJECT	SHEET No.	TOTAL SHEETS
03	ED	89	13.8/18.0	89	164

Fermin Barriga 6-9-14
REGISTERED CIVIL ENGINEER DATE

6-16-14
PLANS APPROVAL DATE

FERMIN BARRIGA No. C47047 Exp. 12-31-15 CIVIL — REGISTERED PROFESSIONAL ENGINEER — STATE OF CALIFORNIA

THE STATE OF CALIFORNIA OR ITS OFFICERS OR AGENTS SHALL NOT BE RESPONSIBLE FOR THE ACCURACY OR COMPLETENESS OF SCANNED COPIES OF THIS PLAN SHEET.

NOTES:

1. FOR DETAILS NOT SHOWN, SEE Std PLAN D75A AND RSP D77B.
2. OUTLET OPENING MAY BE CULVERT (AS SHOWN ON DRAINAGE PROFILE SHEETS).
3. SEE DRAINAGE PROFILES FOR FLOWLINE ELEVATIONS, INLET TYPE AND "H", AND GRATE STATION, OFFSET AND ELEVATION.
4. LIFTING ROD AND WIRE CLOTH SHALL BE TYPE 316 OR 304 STAINLESS STEEL.

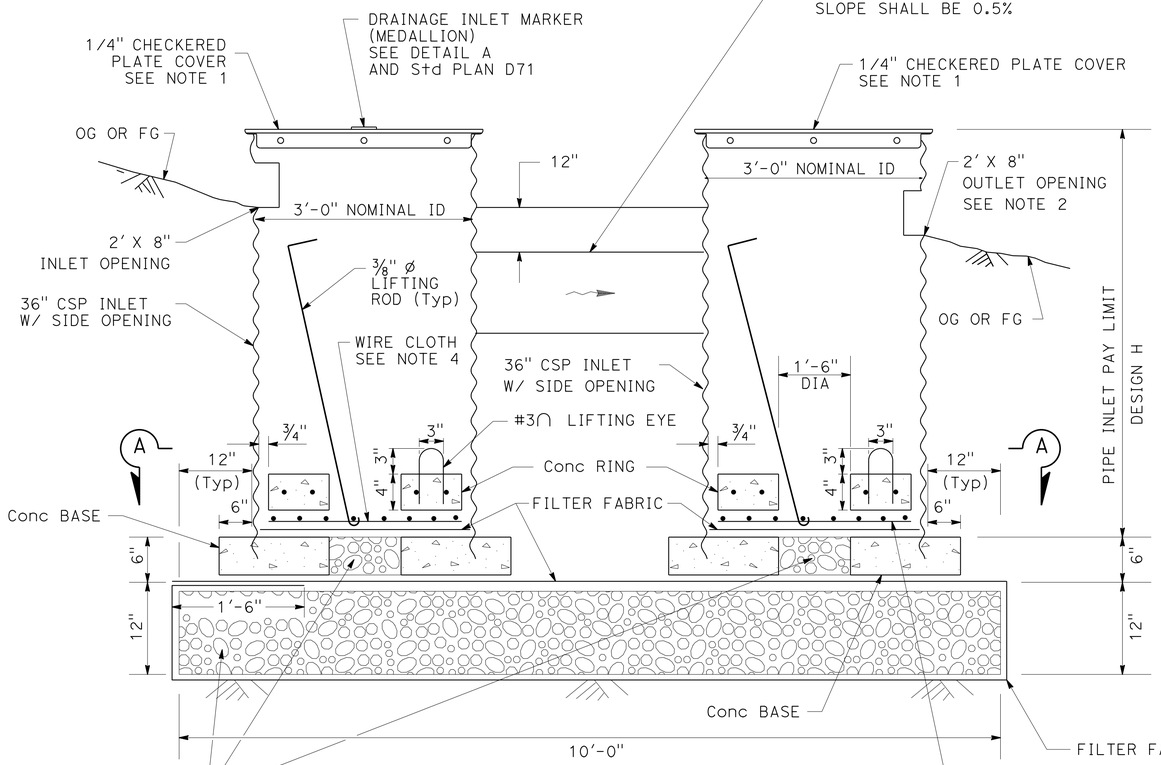

SAND TRAP (TYPE 2)

DRAINAGE SYSTEM No. 1 g 2 b 8 c 9 f h 12 j 16 d 18 a 26 a

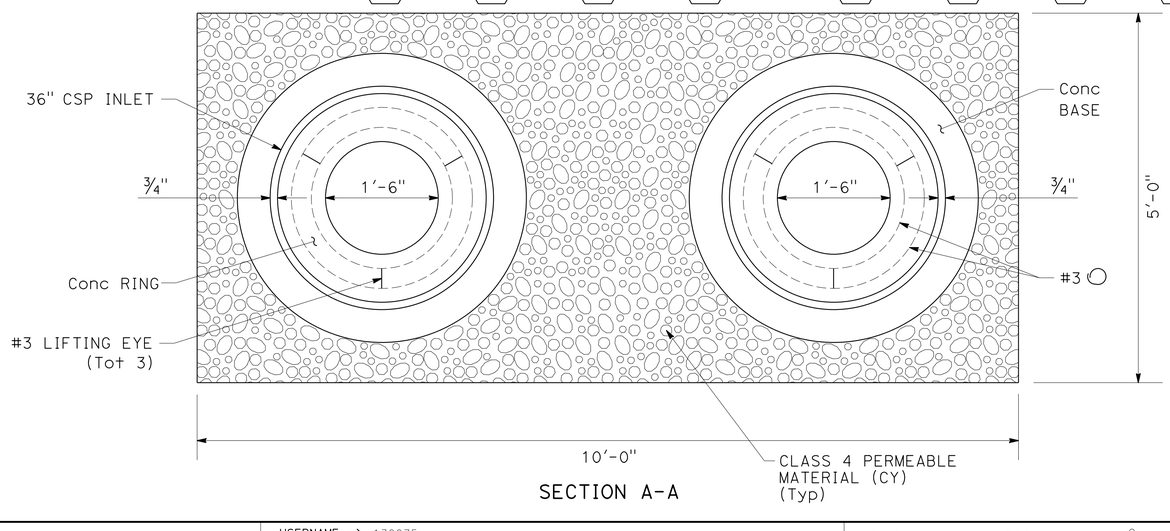

SECTION A-A

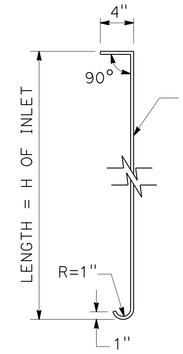

LIFTING ROD

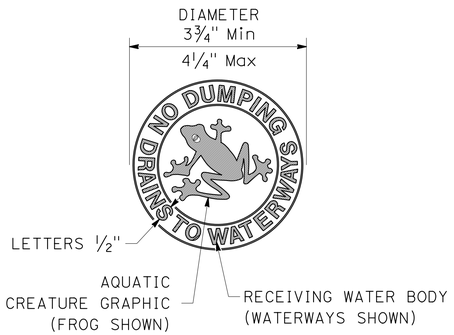

PLAN VIEW

DETAIL A
DRAINAGE INLET MARKER (MEDALLION)

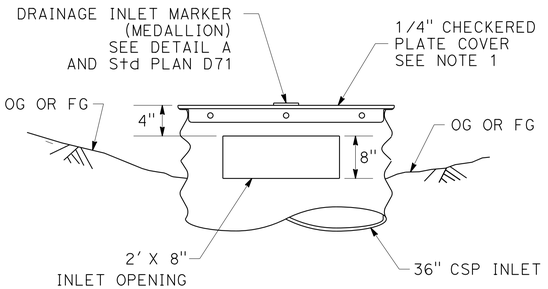

SECTION B-B

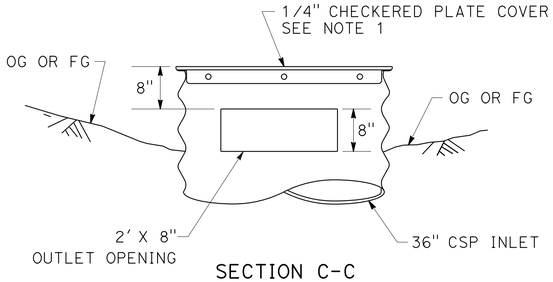

SECTION C-C

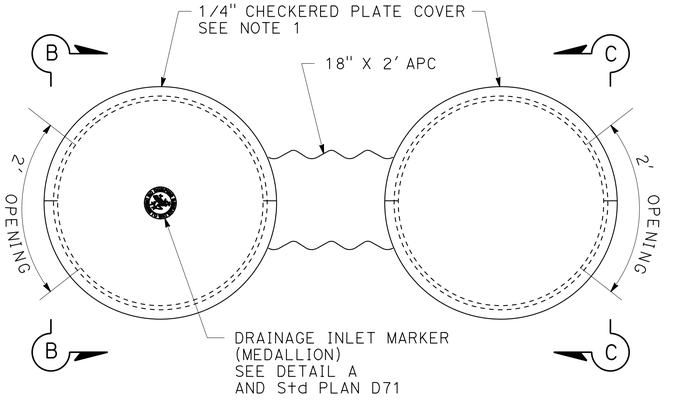

SAND TRAP WITH SIDE OPENING

DRAINAGE SYSTEM No. 1 g 2 b 8 c 9 f h 12 j 16 d 18 a 26 a

DRAINAGE DETAILS

NO SCALE

DD-2

STATE OF CALIFORNIA - DEPARTMENT OF TRANSPORTATION
NORTH REGION DIVISION OF ENGINEERING
Caltrans®

FUNCTIONAL SUPERVISOR: CARLOS A. PORTILLO
CALCULATED-DESIGNED BY:
CHECKED BY:
REVISED BY:
DATE REVISED:
JOSE LUIS VALDEZ
FERMIN BARRIGA

LAST REVISION DATE PLOTTED => 18-MAR-2015
TIME PLOTTED => 15:09
06-05-14

BORDER LAST REVISED 7/2/2010
USERNAME => s130875
DGN FILE => 0300000224ic002.dgn
RELATIVE BORDER SCALE IS IN INCHES 0 1 2 3
UNIT 0305
PROJECT NUMBER & PHASE 03000002241

Dist	COUNTY	ROUTE	POST MILES TOTAL PROJECT	SHEET No.	TOTAL SHEETS
03	ED	89	13.8/18.0	90	164

Fermin Barriga B. 6-9-14
REGISTERED CIVIL ENGINEER DATE

FERMIN BARRIGA No. C47047 Exp. 12-31-15 CIVIL — REGISTERED PROFESSIONAL ENGINEER — STATE OF CALIFORNIA

6-16-14
PLANS APPROVAL DATE

THE STATE OF CALIFORNIA OR ITS OFFICERS OR AGENTS SHALL NOT BE RESPONSIBLE FOR THE ACCURACY OR COMPLETENESS OF SCANNED COPIES OF THIS PLAN SHEET.

NOTE:

1. FOR ADDITIONAL SETTLING BASIN INFORMATION, SEE DRAINAGE PLAN SHEETS D-3 AND D-4, DRAINAGE QUANTITIES SHEET DQ-9 AND DRAINAGE DETAILS SHEETS DD-8 AND DD-9.

LEGEND:

LIMITS OF PAYMENT FOR ROADWAY EXCAVATION

DIRECTION OF SLOPE

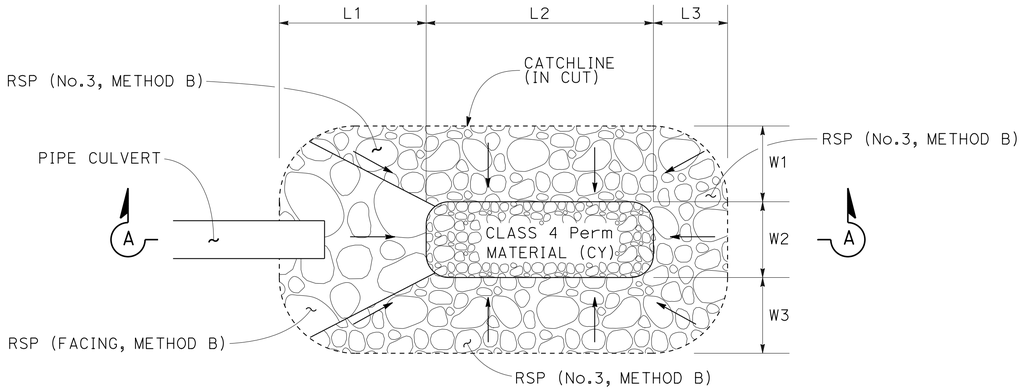

SETTLING BASIN (IN CUT)

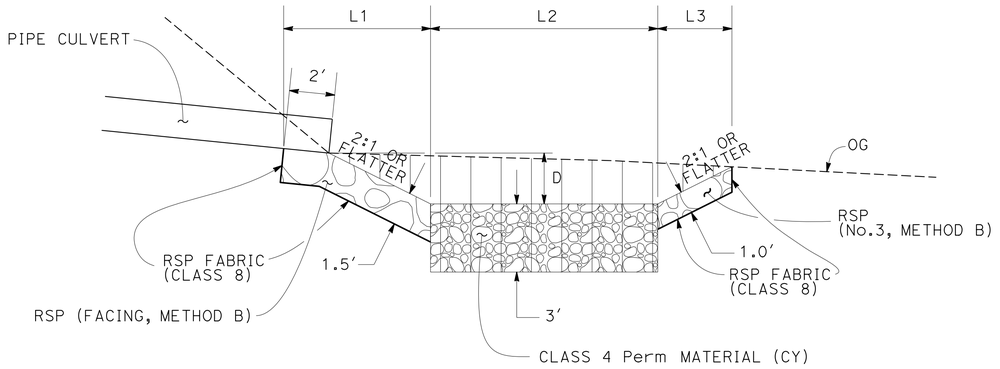

SECTION A-A

SETTLING BASIN LIMITS OF EXCAVATION

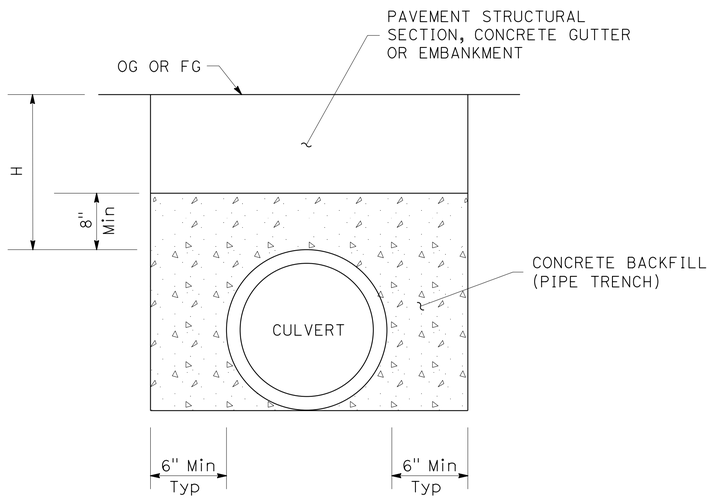

CONCRETE BACKFILL (PIPE TRENCH)

FOR CULVERTS WITH H < 2′
BELOW FG OR OG, WHICHEVER IS LOWER

SETTLING BASIN DIMENSIONS

DRAINAGE PLAN SHEET No.	STATION	D (N)	L1 (N)	W1 (N)	L2 (N)	W2 (N)	L3 (N)	W3 (N)
		LF	LF	LF	LF	LF	LF	LF
D-3	"A3" 221+31.29, 34.7′ Rt	1.2′	4.1	Var 2.5-5.1	9.0	9.1	3.0	Var 2.4-5.3
D-4	"A3" 226+15.22, 64.5′ Rt	6.2′	16.2	Var 6.5-7.2	9.9	Var 13.9-15.6	6.8	Var 7.8-8.8
D-4	"A3" 226+15.22, 110.3′ Rt	8.7′	16.8	4.9	Var 12.7-17.2	Var 25.0-24.7	Var 7.9-9.4	Var 5.4-6.3
D-4	"A3" 230+31.81, 56.2′ Rt	0.7′	Var 8.3-9.4	Var 2.4-5.4	Var 38.3-41.7	var 17.7-28.9	Var 4.4-6.2	Var 5.0-7.5

(N) - NOT A SEPERATE PAY ITEM, FOR INFORMATION ONLY.

DRAINAGE DETAILS

NO SCALE

DD-3

REVISED BY | DATE REVISED
CALCULATED-DESIGNED BY: CARMEN RODRIGUEZ
CHECKED BY: FERMIN BARRIGA
FUNCTIONAL SUPERVISOR: CARLOS A. PORTILLO
STATE OF CALIFORNIA - DEPARTMENT OF TRANSPORTATION
NORTH REGION DIVISION OF ENGINEERING
Caltrans

LAST REVISION 06-04-14 | DATE PLOTTED => 18-MAR-2015 | TIME PLOTTED => 15:09

Dist	COUNTY	ROUTE	POST MILES TOTAL PROJECT	SHEET No.	TOTAL SHEETS
03	ED	89	13.8/18.0	91	164

Fermin Barriga B. 6-9-14
REGISTERED CIVIL ENGINEER DATE

FERMIN BARRIGA No. C47047 Exp. 12-31-15 CIVIL — REGISTERED PROFESSIONAL ENGINEER — STATE OF CALIFORNIA

6-16-14
PLANS APPROVAL DATE

THE STATE OF CALIFORNIA OR ITS OFFICERS OR AGENTS SHALL NOT BE RESPONSIBLE FOR THE ACCURACY OR COMPLETENESS OF SCANNED COPIES OF THIS PLAN SHEET.

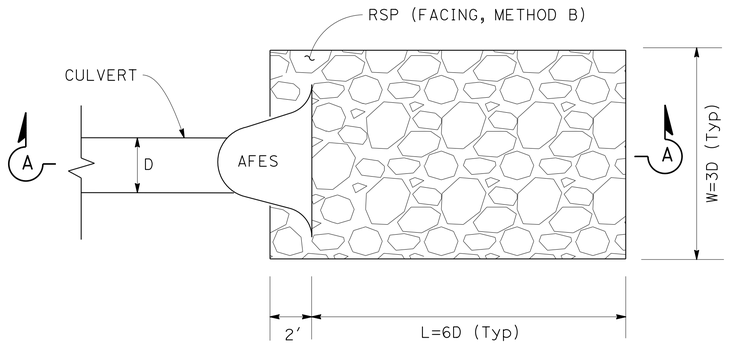

PLAN VIEW

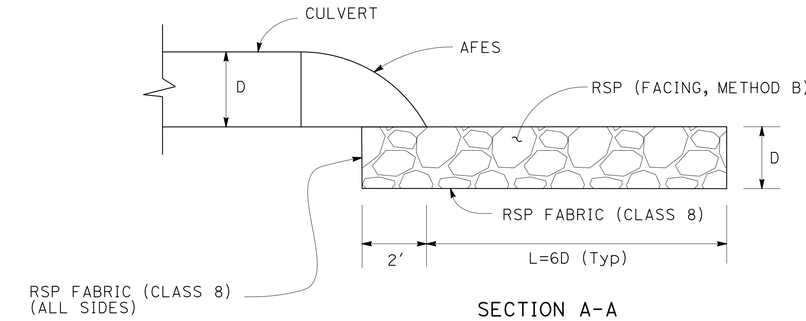

SECTION A-A

ROCK SLOPE PROTECTION DETAIL WITH AFES

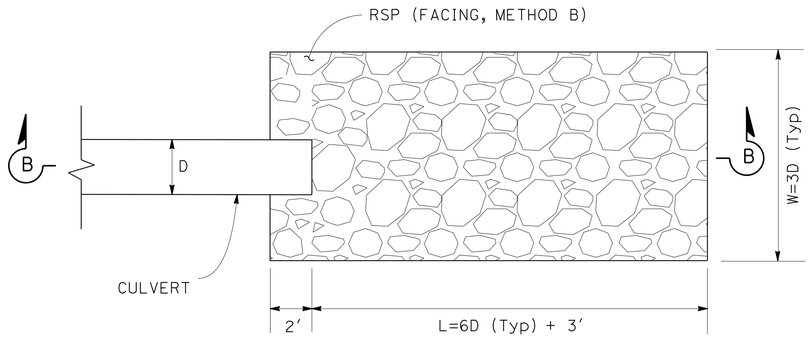

PLAN VIEW

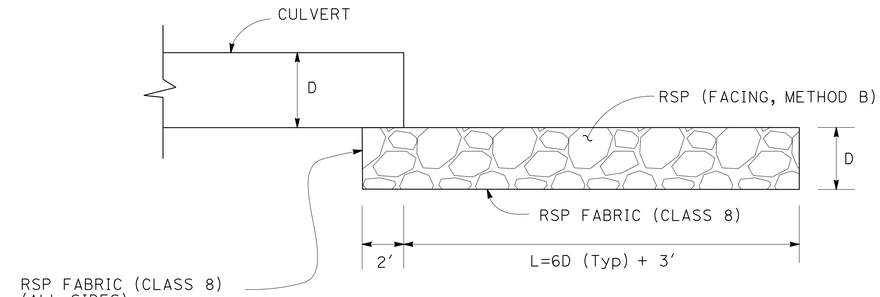

SECTION B-B

ROCK SLOPE PROTECTION DETAIL WITHOUT AFES

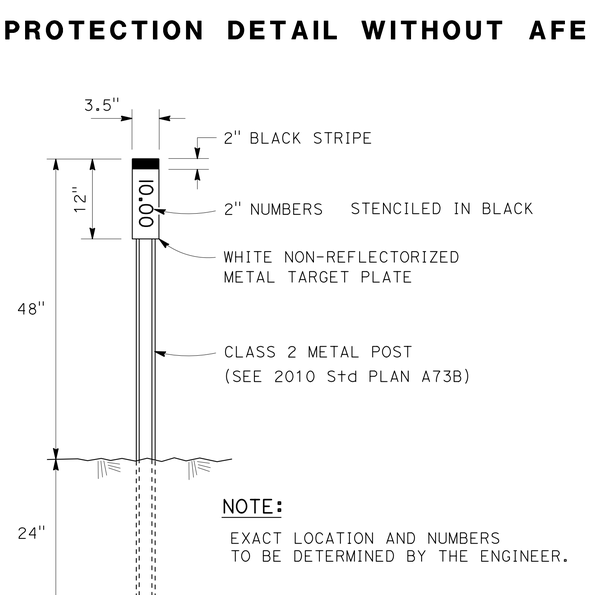

MARKER (CULVERT) DETAIL

DRAINAGE DETAILS

NO SCALE

DD-4

REVISED BY | DATE REVISED
JOSE LUIS VALDEZ | FERMIN BARRIGA
CALCULATED-DESIGNED BY | CHECKED BY
FUNCTIONAL SUPERVISOR: CARLOS A. PORTILLO

STATE OF CALIFORNIA - DEPARTMENT OF TRANSPORTATION
Caltrans®
NORTH REGION
DIVISION OF ENGINEERING

LAST REVISION | DATE PLOTTED => 18-MAR-2015
05-14-14 | TIME PLOTTED => 15:09

BORDER LAST REVISED 7/2/2010 | USERNAME => s130875 | DGN FILE => 0300000224ic004.dgn | RELATIVE BORDER SCALE IS IN INCHES 0 1 2 3 | UNIT 0305 | PROJECT NUMBER & PHASE 03000002241

Dist	COUNTY	ROUTE	POST MILES TOTAL PROJECT	SHEET No.	TOTAL SHEETS
03	ED	89	13.8/18.0	92	164

Fermin Barriga B. 6-9-14
REGISTERED CIVIL ENGINEER DATE

FERMIN BARRIGA No. C47047 Exp. 12-31-15 CIVIL — REGISTERED PROFESSIONAL ENGINEER — STATE OF CALIFORNIA

6-16-14
PLANS APPROVAL DATE

THE STATE OF CALIFORNIA OR ITS OFFICERS OR AGENTS SHALL NOT BE RESPONSIBLE FOR THE ACCURACY OR COMPLETENESS OF SCANNED COPIES OF THIS PLAN SHEET.

NOTES:

1. PLACE CONCRETED-RSP (FACING, METHOD A) AS SHOWN TO DESIPATE FLOW ENERGY AND LEAD WATER FLOW INTO THE TOP OF THE Exist SAND TRAPS.
2. EXPECT TO FIND UNCONCRETED RSP AT THE SAME LOCATIONS WHERE THE CONCRETED-RSP (FACING, METHOD A) IS TO BE PLACED.

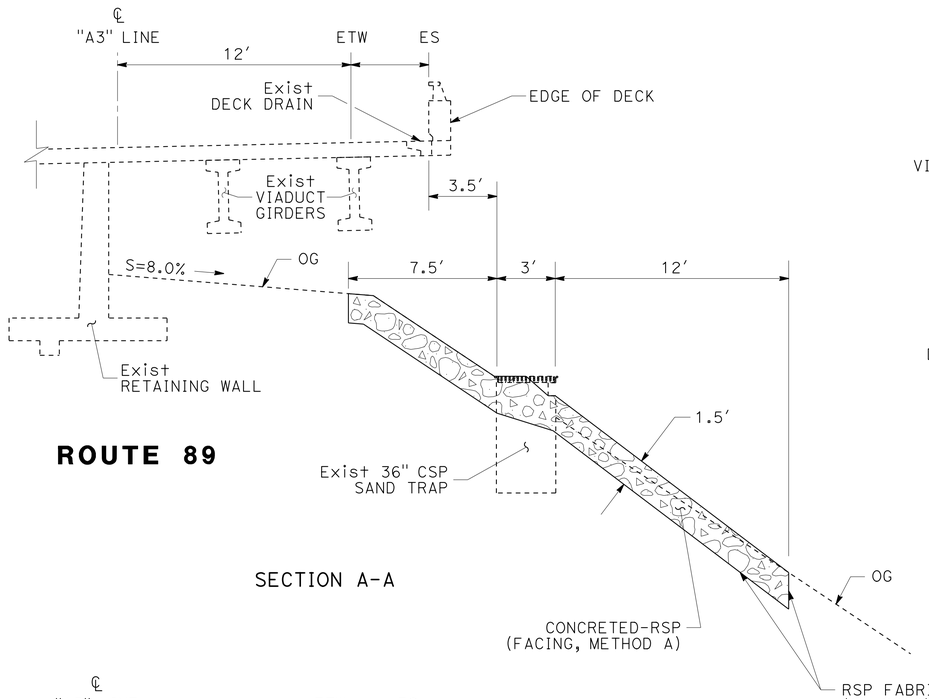

ROUTE 89

SECTION A-A

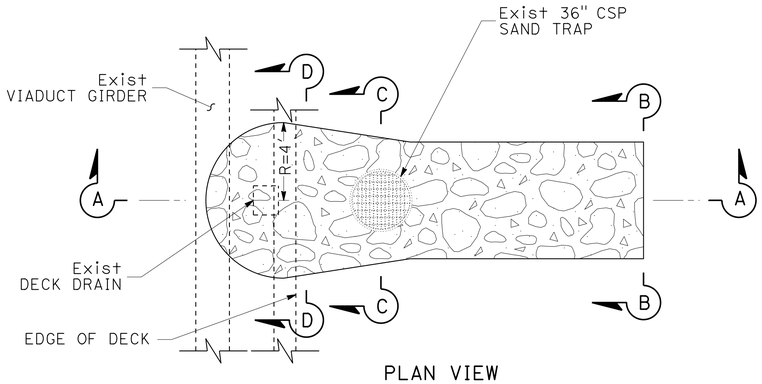

PLAN VIEW

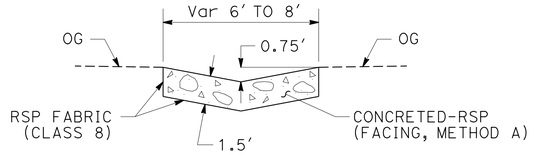

SECTIONS D-D AND H-H

DETAIL A
CONCRETED-RSP (FACING, METHOD A) AT VIADUCTS

DRAINAGE SYSTEM No.

34 ⓐ 35 ⓐ 37 ⓐ 40 ⓐ 41 ⓐ 42 ⓐ 43 ⓐ

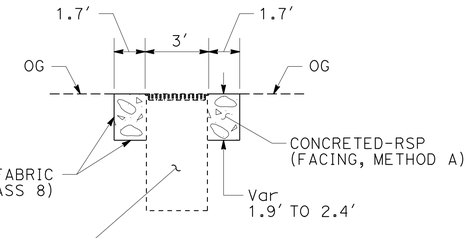

SECTIONS C-C AND G-G

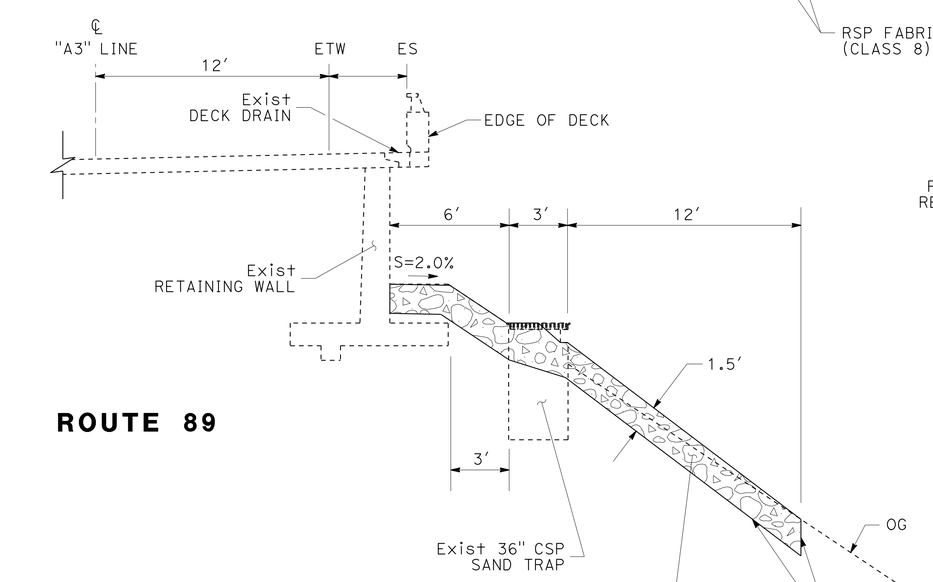

ROUTE 89

SECTION E-E

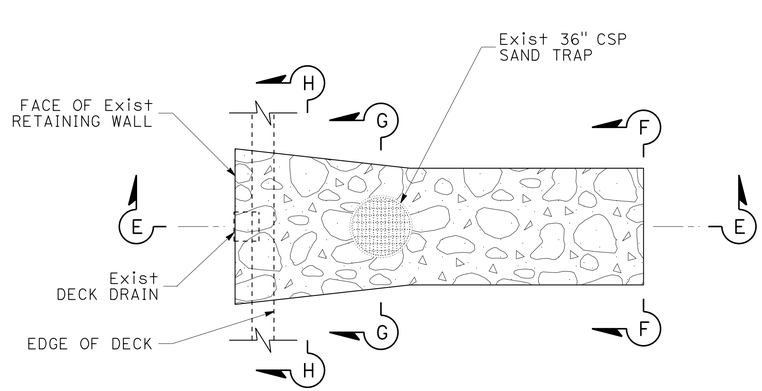

PLAN VIEW

DETAIL B
CONCRETED-RSP (FACING, METHOD A) AT RETAINING WALLS

DRAINAGE SYSTEM No.

30 ⓐ 31 ⓐ 32 ⓐ 33 ⓐ 36 ⓐ 38 ⓐ 39 ⓐ

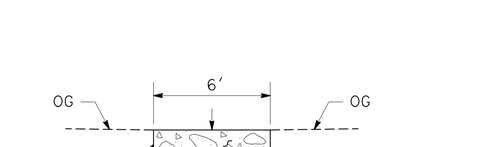

SECTIONS B-B AND F-F

DRAINAGE DETAILS

NO SCALE

DD-5

STATE OF CALIFORNIA - DEPARTMENT OF TRANSPORTATION
NORTH REGION
DIVISION OF ENGINEERING
Caltrans

FUNCTIONAL SUPERVISOR: CARLOS A. PORTILLO

CALCULATED-DESIGNED BY	CHECKED BY	REVISED BY	DATE REVISED
JOSE LUIS VALDEZ	FERMIN BARRIGA		

LAST REVISION | DATE PLOTTED => 18-MAR-2015
05-14-14 | TIME PLOTTED => 15:09

BORDER LAST REVISED 7/2/2010 | USERNAME => s130875 | DGN FILE => 0300000224ic005.dgn | RELATIVE BORDER SCALE IS IN INCHES 0 1 2 3 | UNIT 0305 | PROJECT NUMBER & PHASE 03000002241

Dist	COUNTY	ROUTE	POST MILES TOTAL PROJECT	SHEET No.	TOTAL SHEETS
03	ED	89	13.8/18.0	93	164

Fermin Barriga B. 6-9-14
REGISTERED CIVIL ENGINEER DATE

6-16-14
PLANS APPROVAL DATE

REGISTERED PROFESSIONAL ENGINEER
FERMIN BARRIGA
No. C47047
Exp. 12-31-15
CIVIL
STATE OF CALIFORNIA

THE STATE OF CALIFORNIA OR ITS OFFICERS OR AGENTS SHALL NOT BE RESPONSIBLE FOR THE ACCURACY OR COMPLETENESS OF SCANNED COPIES OF THIS PLAN SHEET.

NOTES:

1. FOR ADDITIONAL PCC APRON INFORMATION, SEE DRAINAGE PLANS AND DRAINAGE PROFILES SHEETS.

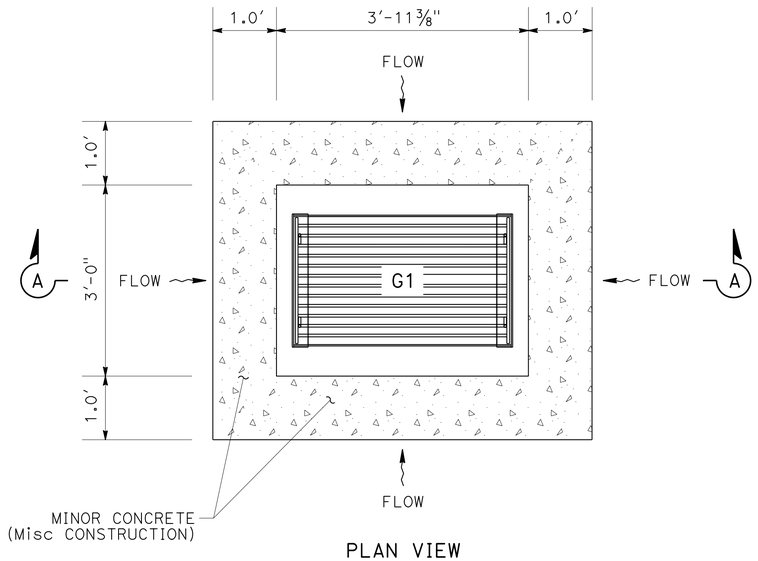

PLAN VIEW

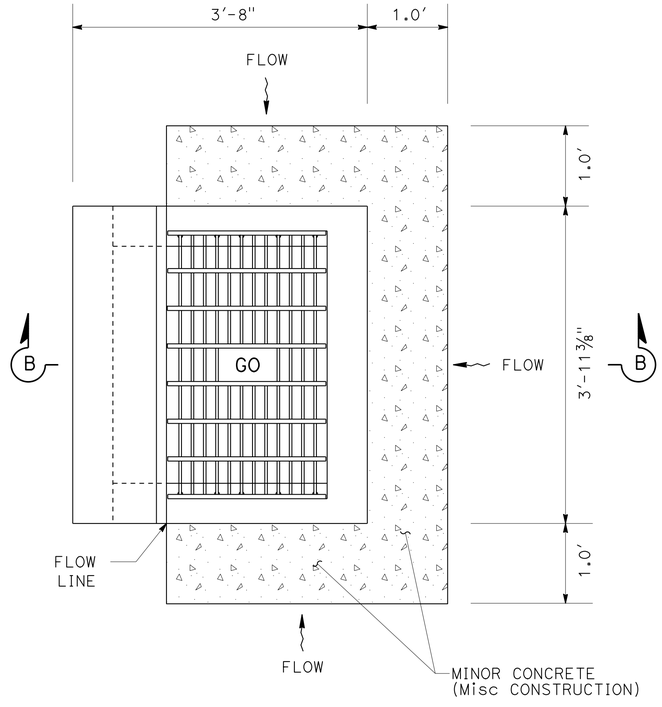

PLAN VIEW

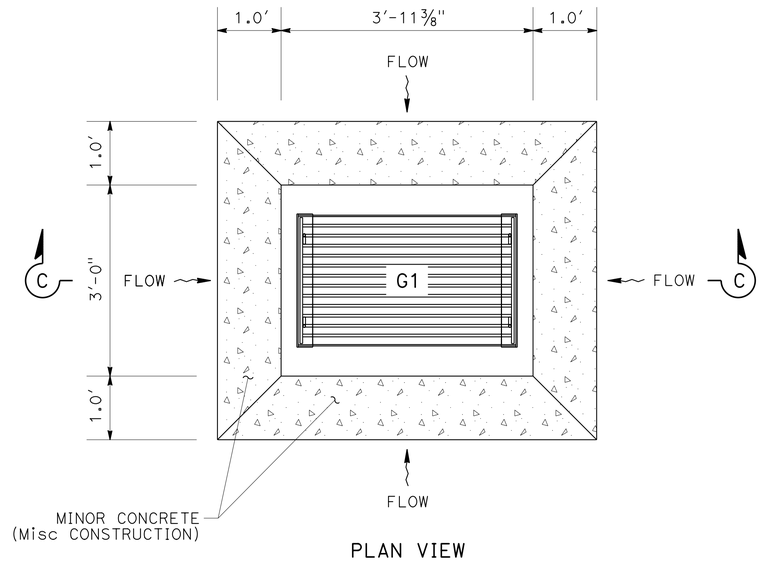

PLAN VIEW

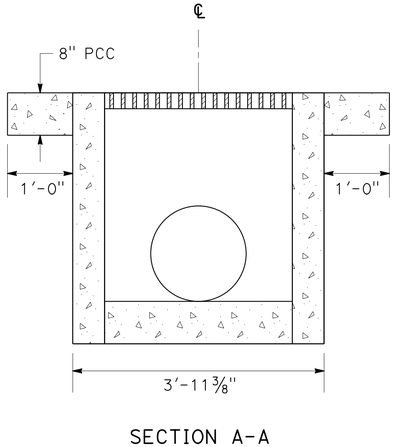

SECTION A-A

PCC APRON (TYPE A)

DRAINAGE SYSTEM No.

27 — f — h

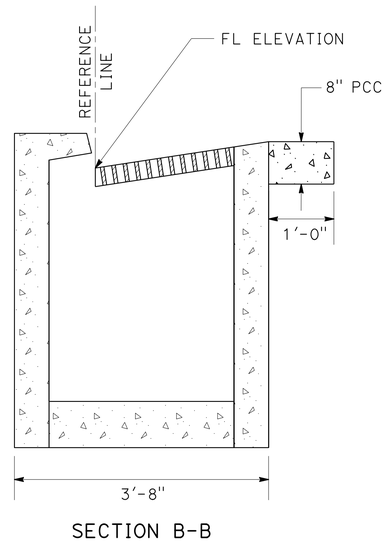

SECTION B-B

PCC APRON (TYPE B)

DRAINAGE SYSTEM No.

13 — c 19 — c

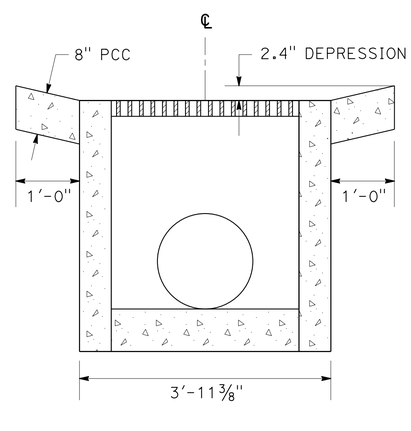

SECTION C-C

PCC APRON (TYPE C)

DRAINAGE SYSTEM No.

13 — g

MINOR CONCRETE (Misc CONSTRUCTION)

DRAINAGE DETAILS

NO SCALE **DD-6**

CALCULATED-DESIGNED BY
CHECKED BY
REVISED BY
DATE REVISED
CARMEN RODRIGUEZ
JOSE LUIS VALDEZ
FUNCTIONAL SUPERVISOR
CARLOS A. PORTILLO
STATE OF CALIFORNIA - DEPARTMENT OF TRANSPORTATION
Caltrans
NORTH REGION
DIVISION OF ENGINEERING

LAST REVISION: DATE PLOTTED => 18-MAR-2015
06-06-14 TIME PLOTTED => 15:09

BORDER LAST REVISED 7/2/2010
USERNAME => s130875
DGN FILE => 03000000224ic006.dgn
RELATIVE BORDER SCALE IS IN INCHES 0 1 2 3
UNIT 0305
PROJECT NUMBER & PHASE 03000002241

Dist	COUNTY	ROUTE	POST MILES TOTAL PROJECT	SHEET No.	TOTAL SHEETS
03	ED	89	13.8/18.0	94	164

Fermin Barriga 6-9-14
REGISTERED CIVIL ENGINEER DATE

FERMIN BARRIGA No. C47047 Exp. 12-31-15 CIVIL — REGISTERED PROFESSIONAL ENGINEER — STATE OF CALIFORNIA

6-16-14
PLANS APPROVAL DATE

THE STATE OF CALIFORNIA OR ITS OFFICERS OR AGENTS SHALL NOT BE RESPONSIBLE FOR THE ACCURACY OR COMPLETENESS OF SCANNED COPIES OF THIS PLAN SHEET.

NOTES:

1. FOR DETAIL NOT SHOWN, SEE Std PLANS RSP 73, D74B AND RSP D77B.
2. FOR SIZE AND LOCATION OF PIPES, SEE DRAINAGE PLANS AND PROFILES.
3. EACH WEEP HOLE SHALL HAVE FILTER FABRIC, A CONCRETE RING WITH LIFTING EYES, A WIRE CLOTH AND LIFTING ROD, SEE DETAIL A ON THIS SHEET.
4. LIFTING ROD AND WIRE CLOTH SHALL BE TYPE 316 OR 304 STAINLESS STEEL.
5. ALL GO (Mod) INLETS SHALL USE THE FACE ANGLE DETAIL SHOWN. UNIT b IN SYSTEM 28 SHALL ALSO HAVE THE ADDITIONAL MODIFICATIONS SHOWN TO FIT Exist FIELD CONDITIONS.

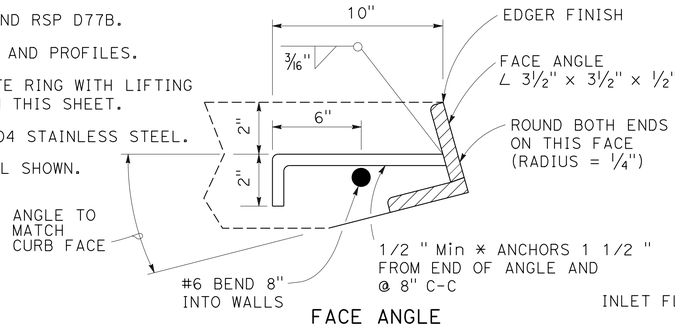

FACE ANGLE
FOR GO (Mod) INLETS
SEE NOTE 5

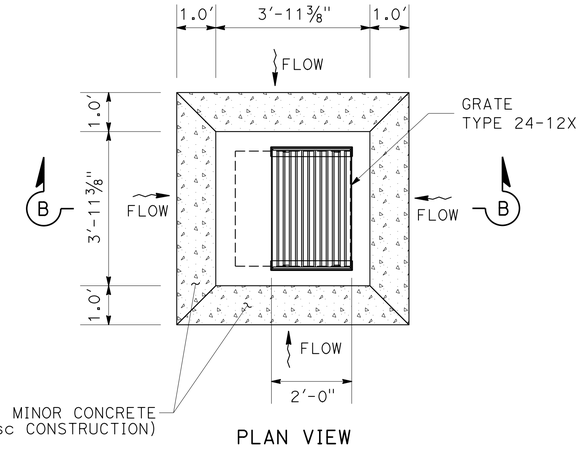

PLAN VIEW

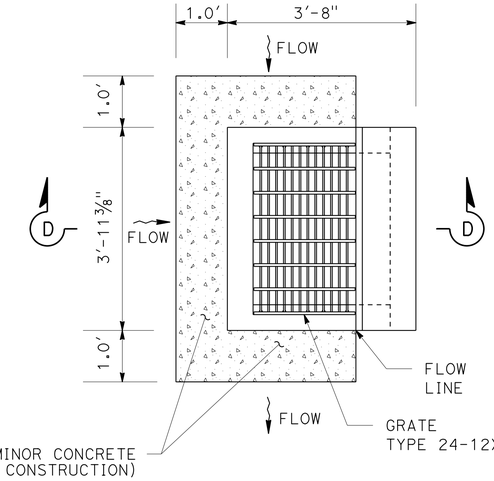

PLAN VIEW

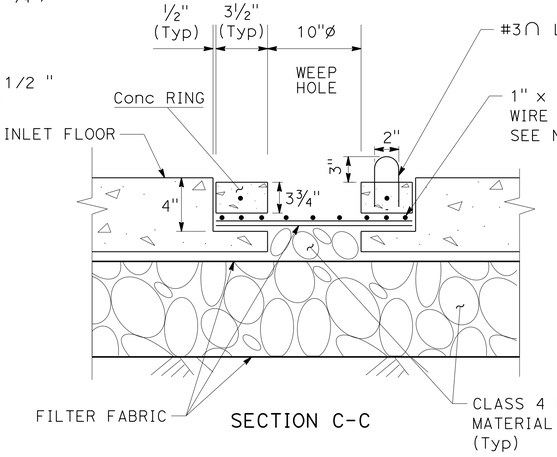

SECTION C-C

DETAIL A

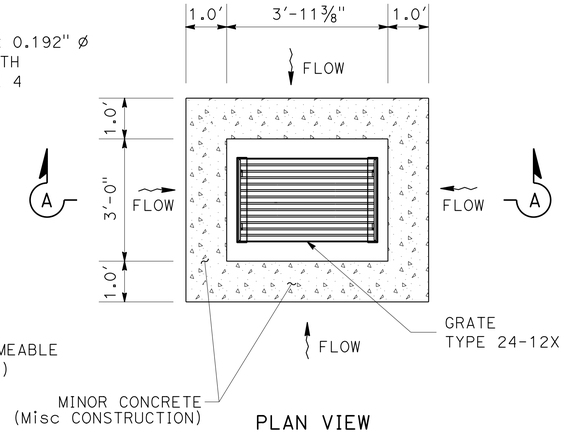

PLAN VIEW

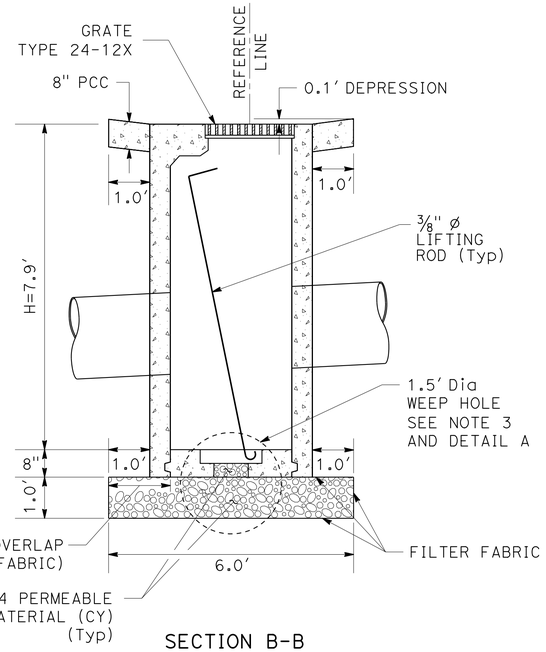

SECTION B-B

SAND TRAP (TYPE G2)

WITH PCC APRON (TYPE D)

DRAINAGE SYSTEM No.

28 c

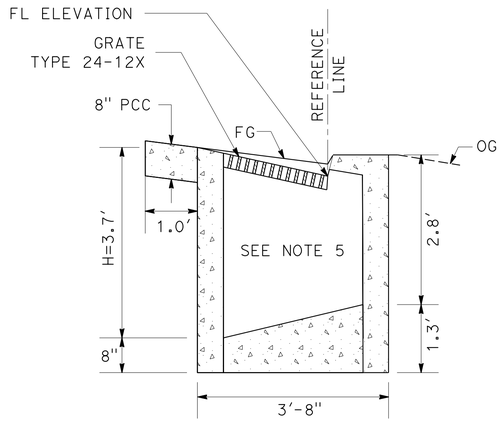

SECTION D-D

Mod DI (TYPE GO)

WITH PCC APRON (TYPE B)

DRAINAGE SYSTEM No.

28 a

LIFTING ROD

PLAN VIEW

Mod DRAINAGE INLET DETAILS

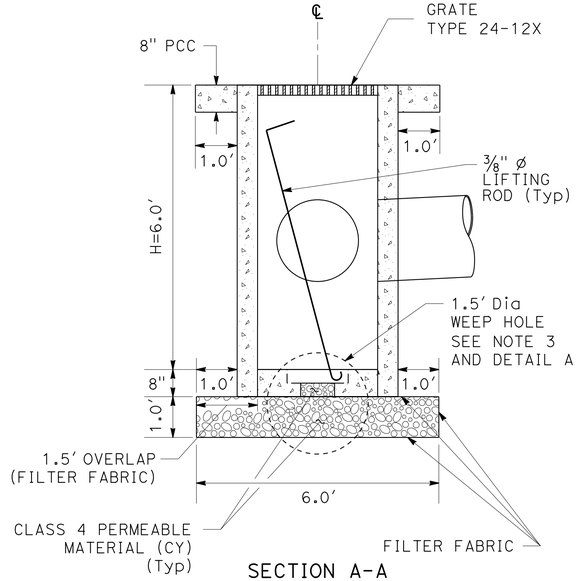

SECTION A-A

SAND TRAP (TYPE G1)

WITH PCC APRON (TYPE A)

DRAINAGE SYSTEM No.

27 d

DRAINAGE DETAILS

NO SCALE

DD-7

REVISED BY | DATE REVISED
CARMEN RODRIGUEZ | JOSE LUIS VALDEZ
CALCULATED-DESIGNED BY | CHECKED BY
FUNCTIONAL SUPERVISOR: CARLOS A. PORTILLO
STATE OF CALIFORNIA - DEPARTMENT OF TRANSPORTATION
NORTH REGION DIVISION OF ENGINEERING
Gutrans®

LAST REVISION | DATE PLOTTED => 18-MAR-2015
06-06-14 | TIME PLOTTED => 15:09

BORDER LAST REVISED 7/2/2010 | USERNAME => s130875 | DGN FILE => 0300000224ic007.dgn | RELATIVE BORDER SCALE IS IN INCHES 0 1 2 3 | UNIT 0305 | PROJECT NUMBER & PHASE 03000002241

Dist	COUNTY	ROUTE	POST MILES TOTAL PROJECT	SHEET No.	TOTAL SHEETS
03	ED	89	13.8/18.0	95	164

Fermin Barriga B. 6-9-14
REGISTERED CIVIL ENGINEER DATE

FERMIN BARRIGA No. C47047 Exp. 12-31-15 CIVIL — REGISTERED PROFESSIONAL ENGINEER — STATE OF CALIFORNIA

6-16-14
PLANS APPROVAL DATE

THE STATE OF CALIFORNIA OR ITS OFFICERS OR AGENTS SHALL NOT BE RESPONSIBLE FOR THE ACCURACY OR COMPLETENESS OF SCANNED COPIES OF THIS PLAN SHEET.

NOTES:

1. FOR ADDITIONAL SETTLING BASIN DIMENSIONS AND SIDE SLOPE INFORMATION, SEE DRAINAGE DETAILS SHEETS DD-3.
2. FOR SETTLING BASIN ELEVATION INFORMATION, SEE DRAINAGE PROFILES SHEETS DP-4 AND DP-6.

LEGEND:

→ DIRECTION OF SLOPE

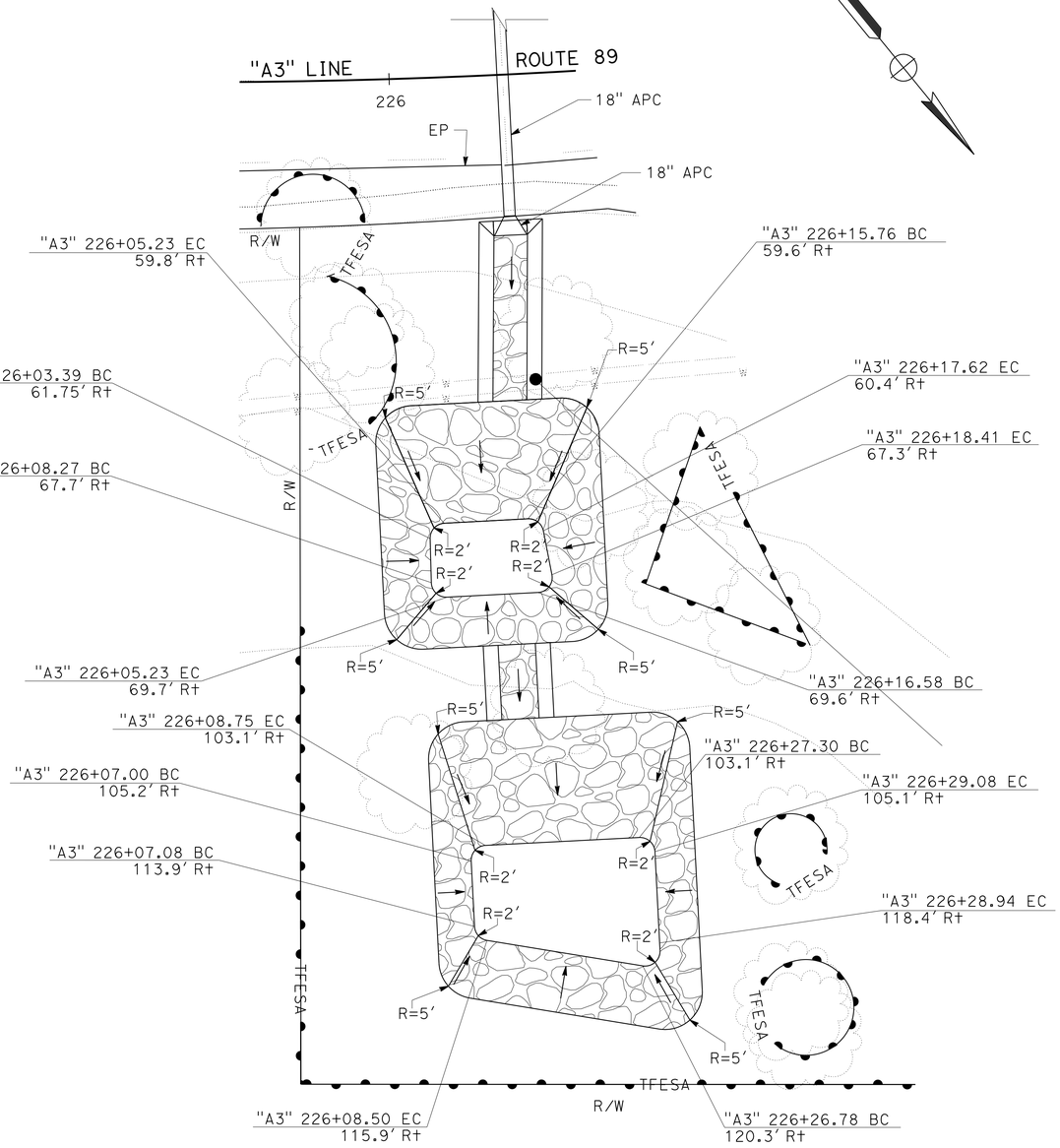

PLAN VIEW

AT Sta "A3" 226+15.22 Rt

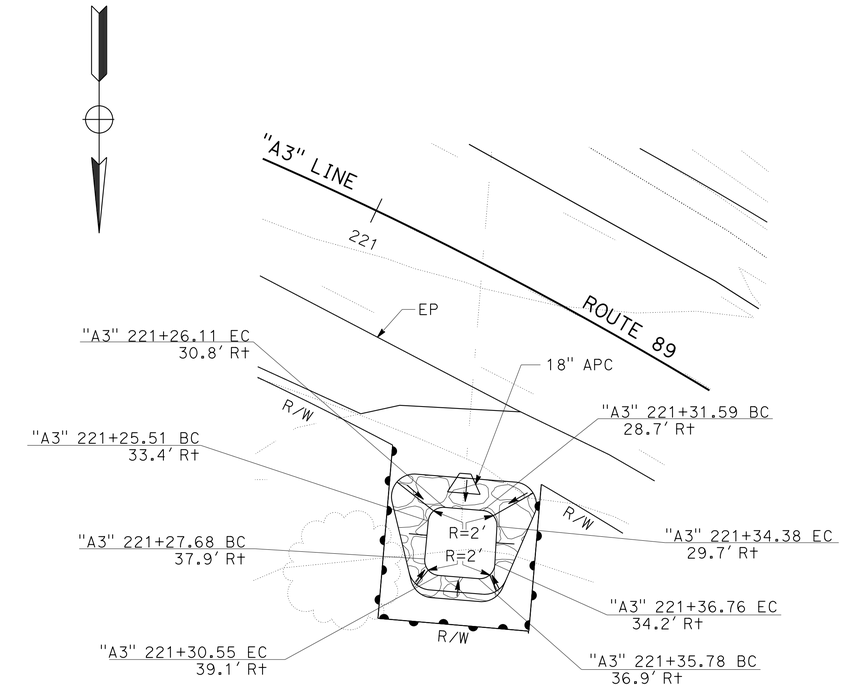

PLAN VIEW

AT Sta "A3" 220+31.29 Rt

SETTLING BASIN DETAILS

DRAINAGE DETAILS

NO SCALE

DD-8

STATE OF CALIFORNIA - DEPARTMENT OF TRANSPORTATION
Caltrans®
NORTH REGION
DIVISION OF ENGINEERING

FUNCTIONAL SUPERVISOR: CARLOS A. PORTILLO

CALCULATED-DESIGNED BY: CARMEN RODRIGUEZ
CHECKED BY: FERMIN BARRIGA

REVISED BY | DATE REVISED

LAST REVISION 05-14-14 | DATE PLOTTED => 18-MAR-2015 | TIME PLOTTED => 15:09

BORDER LAST REVISED 7/2/2010 | USERNAME => s130875 | DGN FILE => 0300000224ic008.dgn | RELATIVE BORDER SCALE IS IN INCHES 0 1 2 3 | UNIT 0305 | PROJECT NUMBER & PHASE 03000002241

Dist	COUNTY	ROUTE	POST MILES TOTAL PROJECT	SHEET No.	TOTAL SHEETS
03	ED	89	13.8/18.0	96	164

Fermin Barriga B. 6-9-14
REGISTERED CIVIL ENGINEER DATE

6-16-14
PLANS APPROVAL DATE

REGISTERED PROFESSIONAL ENGINEER
FERMIN BARRIGA
No. C47047
Exp. 12-31-15
CIVIL
STATE OF CALIFORNIA

THE STATE OF CALIFORNIA OR ITS OFFICERS OR AGENTS SHALL NOT BE RESPONSIBLE FOR THE ACCURACY OR COMPLETENESS OF SCANNED COPIES OF THIS PLAN SHEET.

NOTES:

1. FOR ADDITIONAL SETTLING BASIN DIMENSIONS AND SIDE SLOPE INFORMATION, SEE DRAINAGE DETAILS SHEETS DD-3.
2. FOR SETTLING BASIN ELEVATION INFORMATION, SEE DRAINAGE PROFILES SHEET DP-7.

LEGEND:

→ DIRECTION OF SLOPE

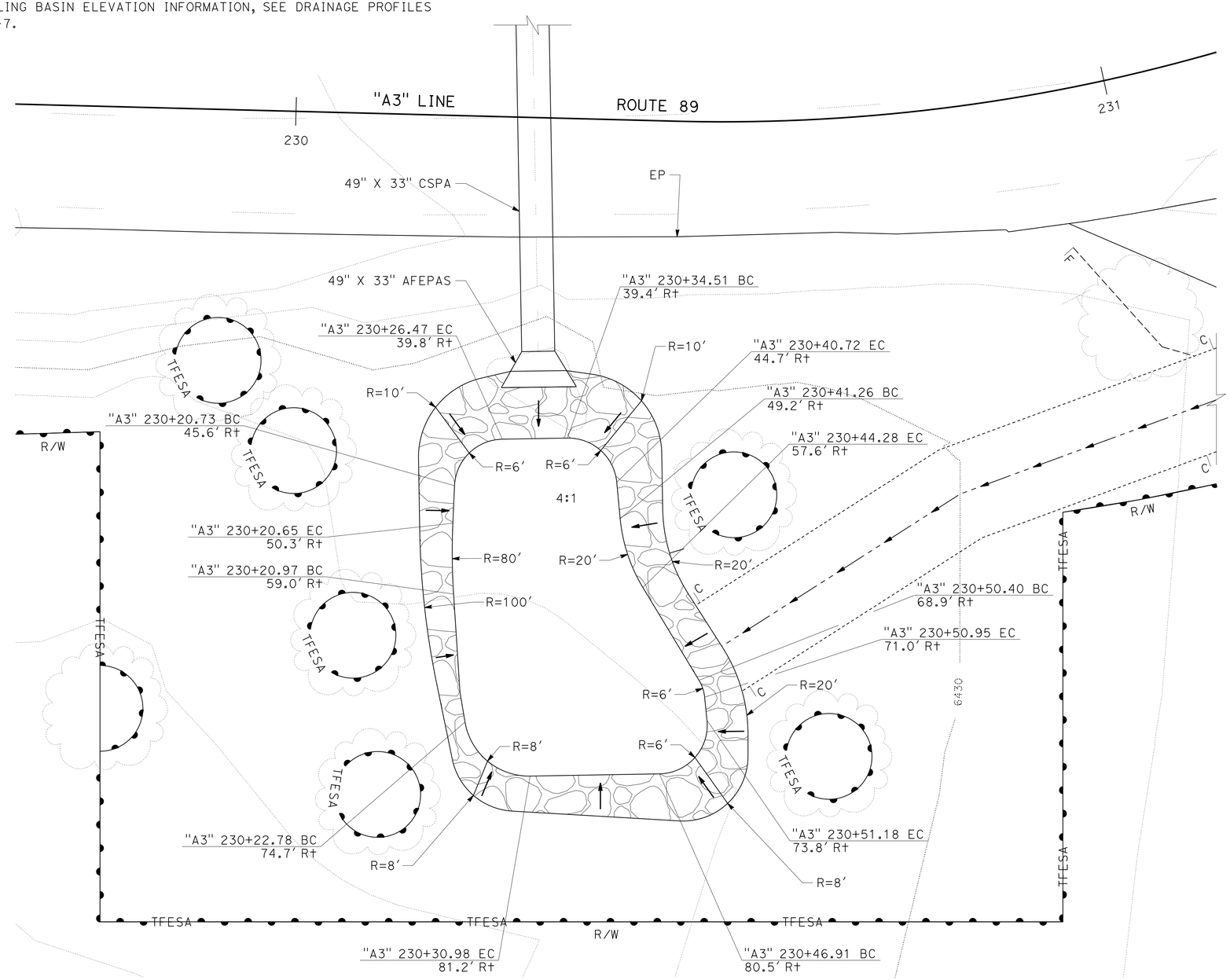

PLAN VIEW

SETTLING BASIN DETAILS

AT Sta "A3" 230+29.38 Rt

DRAINAGE DETAILS

NO SCALE

DD-9

STATE OF CALIFORNIA - DEPARTMENT OF TRANSPORTATION
NORTH REGION
DIVISION OF ENGINEERING
Caltrans

FUNCTIONAL SUPERVISOR: CARLOS A. PORTILLO
CALCULATED-DESIGNED BY: FERMIN BARRIGA
CHECKED BY: JOSE LUIS VALDEZ

REVISED BY	DATE REVISED

LAST REVISION | DATE PLOTTED => 18-MAR-2015
05-14-14 | TIME PLOTTED => 15:09

BORDER LAST REVISED 7/2/2010 | USERNAME => s130875 | DGN FILE => 0300000224ic009.dgn | RELATIVE BORDER SCALE IS IN INCHES 0 1 2 3 | UNIT 0305 | PROJECT NUMBER & PHASE 03000002241

NOTES:

1. (N)=NOT A SEPARATE PAY ITEM, FOR INFORMATION ONLY.
2. S=STANDARD, P=POSITIVE, D=DOWNDRAIN

ABBREVIATIONS:

CIPP CURED-IN-PLACE PIPELINER
AFEPAS ALTERNATIVE FLARED END PIPE ARCH SECTION

Dist	COUNTY	ROUTE	POST MILES TOTAL PROJECT	SHEET No.	TOTAL SHEETS
03	ED	89	13.8/18.0	97	164

Fermin Barriga 6-9-14
REGISTERED CIVIL ENGINEER DATE

6-16-14
PLANS APPROVAL DATE

REGISTERED PROFESSIONAL ENGINEER — FERMIN BARRIGA — No. C47047 — Exp. 12-31-15 — CIVIL — STATE OF CALIFORNIA

THE STATE OF CALIFORNIA OR ITS OFFICERS OR AGENTS SHALL NOT BE RESPONSIBLE FOR THE ACCURACY OR COMPLETENESS OF SCANNED COPIES OF THIS PLAN SHEET.

DRAINAGE QUANTITIES

DRAINAGE PLAN SHEET No.	DRAINAGE PROFILES SHEET No.	DRAINAGE SYSTEM No.	DRAINAGE UNIT	ABANDON CULVERT (LF)	SAND BACKFILL (CY)	REMOVE CULVERT (LF)	REMOVE FES (EA)	REMOVE HEADWALL (EA)	REMOVE INLET (EA)	(N) HEIGHT OF INLET (LF)	36" CSP INLET (.168" THICK) (LF)	MINOR CONCRETE (MINOR STRUCTURE) (CY)	MINOR CONCRETE (Misc CONSTRUCTION) (CY)	Misc IRON AND STEEL (LB)	GRATE TYPE (N) 24-12X (EA)	GRATE TYPE (N) 36R (EA)	GRATE TYPE (N) 36RX (EA)	GRATE TYPE (N) 1/4" CHECKERED PLATE COVER (EA)	DI MARKER STAMPED CONCRETE IMPRINT (EA)	DI MARKER MEDALLION (EA)	MARKER (CULVERT) (EA)	CONCRETE BACKFILL (PIPE TRENCH) (CY)	PIPELINER CLEANING, INSPECTING, AND PREPARING CULVERT (LF)	PIPELINER 18" CURED-IN-PLACE PIPELINER (LF)	PIPELINER 24" CURED-IN-PLACE PIPELINER (LF)	CULVERTS (N) ELBOW SECTION (EA)	CULVERTS 18" APC (LF)	CULVERTS 24" APC (LF)	CULVERTS 49" X 33" CSPA (.138" THICK) (LF)	AFES 18" AFES (EA)	AFES 49" X 33" AFEPAS (EA)	(N) PIPE JOINT CLASSIFICATION (TYPE)	CLASS 4 PERMEABLE MATERIAL (CY)	FILTER FABRIC (SQYD)	CONCRETED-RSP (FACING, METHOD A) (CY)	RSP (FACING, METHOD B) (CY)	RSP FABRIC (CLASS 8) (SQYD)	DESCRIPTION	STATION	DRAINAGE PLAN SHEET No.	DRAINAGE SYSTEM No.	DRAINAGE UNIT
D-1	DP-1	1	a			39.2																																REMOVE Culv	"A3" 180+30.89	D-1	1	a
			b																		2					39.2					S						18" APC				b
			c																																		3.5	13.2	RSP (FACING, METHOD B)				c
			d				1																																REMOVE FES				d
			e																												1							18" AFES				e
			f																																	6.3	20.2	RSP (FACING, METHOD B)				f
			g							5.5	5.5			177				1		1													1.0	8.6			SAND TRAP (TYPE 2)	"A3" 180+45.97			g
D-2	DP-2	2	a																		1		31.1	31.1														18" CIPP; Culv Mkr ON NB SIDE	"A3" 200+62.15	D-2	2	a
			b																																	3.5	13.2	RSP (FACING, METHOD B)				b
D-3	DP-3	3	a																		1		64.8	64.8														18" CIPP; Culv Mkr ON NB SIDE	"A3" 209+82.49	D-3	3	a
			b																																	3.5	13.2	RSP (FACING, METHOD B)				b
D-3	DP-3	4	a																		2					74.0					S							18" APC	"A3" 216+01.44	D-3	4	a
			b				1																															REMOVE FES				b
			c																												1							18" AFES				c
			d																																	2.8	10.7	RSP (FACING, METHOD B)				d
			e			74.0																																REMOVE Culv				e
			f				1																															REMOVE FES				f
			g																												1							18" AFES				g
			h																																	2.8	10.7	RSP (FACING, METHOD B)				h
D-3	DP-4	5	a						2																													REMOVE INLET	"A3" 220+47.84	D-3	5	a
			b							5.5	11.0			354				2		1													2.0	16.0			2 SAND TRAPS (TYPE 2)				b
			c																												2.0			S				18" APC				c
			d																																	1.0	4.7	RSP (FACING, METHOD B)				d
			e				1																															REMOVE FES	"A3" 221+15.66			e
			f																		1												1				18" AFES				f
			g			6.8																																	REMOVE Culv				g
			h				1																															REMOVE FES				h
			i																		1												1				18" AFES				i
SHEET TOTAL						120.0	5		2		16.5			531				3		2	8		95.9	95.9			115.2			5			3.0	24.6		23.4	85.7	SHEET TOTAL				

DRAINAGE QUANTITIES
DQ-1

STATE OF CALIFORNIA - DEPARTMENT OF TRANSPORTATION
NORTH REGION
DIVISION OF ENGINEERING
Caltrans

FUNCTIONAL SUPERVISOR: CARLOS A. PORTILLO
CALCULATED-DESIGNED BY: RANVIR JAWANDA
CHECKED BY: CARMEN RODRIGUEZ
REVISED BY
DATE REVISED

LAST REVISION DATE PLOTTED => 18-MAR-2015
TIME PLOTTED => 15:09
05-14-14

BORDER LAST REVISED 7/2/2010
USERNAME => s130875
DGN FILE => 03000002241id001.dgn
RELATIVE BORDER SCALE IS IN INCHES 0 1 2 3
UNIT 0305
PROJECT NUMBER & PHASE 03000002241

Dist	COUNTY	ROUTE	POST MILES TOTAL PROJECT	SHEET No.	TOTAL SHEETS
03	ED	89	13.8/18.0	98	164

Fermin Barriga B. 6-9-14
REGISTERED CIVIL ENGINEER DATE

FERMIN BARRIGA No. C47047 Exp. 12-31-15 CIVIL — REGISTERED PROFESSIONAL ENGINEER — STATE OF CALIFORNIA

6-16-14
PLANS APPROVAL DATE

THE STATE OF CALIFORNIA OR ITS OFFICERS OR AGENTS SHALL NOT BE RESPONSIBLE FOR THE ACCURACY OR COMPLETENESS OF SCANNED COPIES OF THIS PLAN SHEET.

NOTES:

1. (N)=NOT A SEPARATE PAY ITEM, FOR INFORMATION ONLY.
2. S=STANDARD, P=POSITIVE, D=DOWNDRAIN

DRAINAGE QUANTITIES

DRAINAGE PLAN SHEET No.	DRAINAGE PROFILES SHEET No.	DRAINAGE SYSTEM No.	DRAINAGE UNIT	ABANDON CULVERT (LF)	SAND BACKFILL (CY)	REMOVE CULVERT (LF)	REMOVE FES (EA)	REMOVE HEADWALL (EA)	REMOVE INLET (EA)	(N) HEIGHT OF INLET (LF)	36" CSP INLET (.168" THICK) (LF)	MINOR CONCRETE (MINOR STRUCTURE) (CY)	MINOR CONCRETE (Misc CONSTRUCTION) (CY)	Misc IRON AND STEEL (LB)	GRATE TYPE (N) 24-12X (EA)	GRATE TYPE (N) 36R (EA)	GRATE TYPE (N) 36RX (EA)	GRATE TYPE (N) 1/4" CHECKERED PLATE COVER (EA)	DI MARKER STAMPED CONCRETE IMPRINT (EA)	DI MARKER MEDALLION (EA)	MARKER (CULVERT) (EA)	CONCRETE BACKFILL (PIPE TRENCH) (CY)	PIPELINER CLEANING, INSPECTING, AND PREPARING CULVERT (LF)	PIPELINER 18" CURED-IN-PLACE PIPELINER (LF)	PIPELINER 24" CURED-IN-PLACE PIPELINER (LF)	CULVERTS (N) ELBOW SECTION (EA)	CULVERTS 18" APC (LF)	CULVERTS 24" APC (LF)	CULVERTS 49" X 33" CSPA (.138" THICK) (LF)	AFES 18" AFES (EA)	AFES 49" X 33" AFEPAS (EA)	(N) PIPE JOINT CLASSIFICATION (TYPE)	CLASS 4 PERMEABLE MATERIAL (CY)	FILTER FABRIC (SQYD)	CONCRETED-RSP (FACING, METHOD A) (CY)	RSP (FACING, METHOD B) (CY)	RSP FABRIC (CLASS 8) (SQYD)	DESCRIPTION	STATION	DRAINAGE PLAN SHEET No.	DRAINAGE SYSTEM No.	DRAINAGE UNIT
D-4	DP-5	6	a				1																															REMOVE FES	"A3" 222+07.62	D-4	6	a
			b																		1															18" AFES				b
			c																																7.2	22.7	RSP (FACING, METHOD B)				c
			d				1																														REMOVE FES				d
			e																		1															18" AFES				e
D-4	DP-5	7	a				1																														REMOVE FES	"A3" 223+15.30	D-4	7	a
			b																		1															18" AFES				b
			c																																2.8	10.7	RSP (FACING, METHOD B)				c
			d				1																														REMOVE FES				d
			e																		1															18" AFES				e
D-4	DP-6	8	a				1																														REMOVE FES	"A3" 226+15.22	D-4	8	a
			b																											2.0			S				18" APC				b
			c								12.5			354				2		1														2.0	16.0			2 SAND TRAPS (TYPE 2)				c
			d																																6.1	21.9	RSP (FACING, METHOD B)				d
			e			28.1																																REMOVE Culv				e
			f																		2									34.3			S				18" APC				f
			g																															1			18" AFES				g
			h																																5.1	16.6	RSP (FACING, METHOD B)				h
D-4	DP-7	9	a																															1			49" X 33" AFEPAS	"A3" 230+29.38	D-4	9	a
			b			54.2																															REMOVE Culv				b
			c																		2											54.2			S				49" X 33" CSPA				c
			d																															1			49" X 33" AFEPAS				d
			e																																15.6	44.4	RSP (FACING, METHOD B)				e
			f							5.5	11.0			354				2		1													2.0	16.0			2 SAND TRAPS (TYPE 2)	"A3" 230+40.06			f
			g																											2.0			S				18' APC				g
	DP-8		h							5.5	11.0			354				2		1														2.0	16.0			2 SAND TRAPS (TYPE 2)	"A3" 231+05.80			h
			i																											2.0			S				18' APC				i
D-6	DP-9	10	a						1																												REMOVE INLET	"A3" 255+71.90	D-6	10	a
			b																		1		38.7	38.7												18" CIPP; Culv Mkr ON NB SIDE				b
			c																																10.0	32.0	RSP (FACING, METHOD B)				c
			d											239	1																						24-12X GRATE				d
SHEET TOTAL						82.3	5		1		34.5			1,301	1			6		3	9		38.7	38.7			40.3		54.2	5	2		6.0	48.0		46.9	148.3	SHEET TOTAL				

CALCULATED-DESIGNED BY: RANVIR JAWANDA
CHECKED BY: CARMEN RODRIGUEZ
FUNCTIONAL SUPERVISOR: CARLOS A. PORTILLO
REVISED BY | DATE REVISED

STATE OF CALIFORNIA - DEPARTMENT OF TRANSPORTATION
NORTH REGION
DIVISION OF ENGINEERING
Caltrans

DRAINAGE QUANTITIES
DQ-2

LAST REVISION | DATE PLOTTED => 18-MAR-2015
06-06-14 | TIME PLOTTED => 15:09

BORDER LAST REVISED 7/2/2010
USERNAME => s130875
DGN FILE => 03000002241id002.dgn
RELATIVE BORDER SCALE IS IN INCHES 0 1 2 3
UNIT 0305
PROJECT NUMBER & PHASE 03000002241

NOTES:

1. (N)=NOT A SEPARATE PAY ITEM, FOR INFORMATION ONLY.
2. S=STANDARD, P=POSITIVE, D=DOWNDRAIN

Dist	COUNTY	ROUTE	POST MILES TOTAL PROJECT	SHEET No.	TOTAL SHEETS
03	ED	89	13.8/18.0	99	164

Fermin Barriga B. 6-9-14
REGISTERED CIVIL ENGINEER DATE

6-16-14
PLANS APPROVAL DATE

REGISTERED PROFESSIONAL ENGINEER — FERMIN BARRIGA — No. C47047 — Exp. 12-31-15 — CIVIL — STATE OF CALIFORNIA

THE STATE OF CALIFORNIA OR ITS OFFICERS OR AGENTS SHALL NOT BE RESPONSIBLE FOR THE ACCURACY OR COMPLETENESS OF SCANNED COPIES OF THIS PLAN SHEET.

DRAINAGE QUANTITIES

DRAINAGE PLAN SHEET No.	DRAINAGE PROFILES SHEET No.	DRAINAGE SYSTEM No.	DRAINAGE UNIT	ABANDON CULVERT (LF)	SAND BACKFILL (CY)	REMOVE CULVERT (LF)	REMOVE FES (EA)	REMOVE HEADWALL (EA)	REMOVE INLET (EA)	(N) HEIGHT OF INLET (LF)	36" CSP INLET (.168" THICK) (LF)	MINOR CONCRETE (MINOR STRUCTURE) (CY)	MINOR CONCRETE (Misc CONSTRUCTION) (CY)	Misc IRON AND STEEL (LB)	GRATE TYPE (N) 24-12X (EA)	GRATE TYPE (N) 36R (EA)	GRATE TYPE (N) 36RX (EA)	GRATE TYPE (N) 1/4" CHECKERED PLATE COVER (EA)	DI MARKER STAMPED CONCRETE IMPRINT (EA)	DI MARKER MEDALLION (EA)	MARKER (CULVERT) (EA)	CONCRETE BACKFILL (PIPE TRENCH) (CY)	PIPELINER CLEANING, INSPECTING, AND PREPARING CULVERT (LF)	PIPELINER 18" CURED-IN-PLACE PIPELINER (LF)	PIPELINER 24" CURED-IN-PLACE PIPELINER (LF)	CULVERTS (N) ELBOW SECTION (EA)	CULVERTS 18" APC (LF)	CULVERTS 24" APC (LF)	CULVERTS 49" X 33" CSPA (.138" THICK) (LF)	AFES 18" AFES (EA)	AFES 49" X 33" AFEPAS (EA)	(N) PIPE JOINT CLASSIFICATION (TYPE)	CLASS 4 PERMEABLE MATERIAL (CY)	FILTER FABRIC (SQYD)	CONCRETED-RSP (FACING, METHOD A) (CY)	RSP (FACING, METHOD B) (CY)	RSP FABRIC (CLASS 8) (SQYD)	DESCRIPTION	STATION	DRAINAGE PLAN SHEET No.	DRAINAGE SYSTEM No.	DRAINAGE UNIT
D-6	DP-9	11	a				1																															REMOVE FES	"A3" 260+77.75	D-6	11	a
			b							3.0	3.0			236		1																	1.0	8.6				SAND TRAP (TYPE 1)				b
			c																																	3.4	11.9	RSP (FACING, METHOD B)				c
			d																		2								1									18" AFES; Culv Mkr EACH SIDE				d
D-6	DP-10	12	a				1																															REMOVE FES	"A3" 267+28.86	D-6	12	a
			b																										1									18" AFES				b
			c																																	20.2	53.6	RSP (FACING, METHOD B)	"A3" 267+08.15			c
			d		74.3																																	REMOVE Culv				d
			e																		2							77.7				S						18" APC				e
			f																			2.2																Conc BACKFILL (PIPE TRENCH)				f
			g				1																															REMOVE FES				g
			h																										1									18" AFES				h
			i																																	7.2	22.7	RSP (FACING, METHOD B)	"A3" 267+22.59 TO "A3" 267+32.29 Lt			i
			j							5.5	11.0			354						2		1													2.0	16.0			2 SAND TRAPS (TYPE 2)				j
			k																									2.0				S						18" APC				k
D-6	DP-11	13	a																																	3.5	13.2	RSP (FACING, METHOD B)	"A3" 268+13.80	D-6	13	a
			b																		2							46.5				S						18" APC				b
			c							5.7		1.9	0.3	239	1					1																		Mod DI (TYPE GO)				c
			d																		1							45.5				S						18" APC	"A3" 270+45.04			d
			e																													1		S				22.5° ELBOW SECTION				e
			f																									12.2				S						18" APC				f
			g							4.9		1.4	0.4	239	1					1																		DI (TYPE G1)				g
D-8	DP-12	14	a		6.0																																	REMOVE Culv	"A3" 290+06.28 TO "A3" 290+24.36 Lt	D-8	14	a
			b																		1							6.0				S						18" APC				b
			c																													1						18" AFES				c
			d																																	2.8	10.7	RSP (FACING, METHOD B)				d
D-9	DP-13	15	a																		2		58.3		58.3													24" CIPP	"A3" 306+59.58	D-9	15	a
			b																				20.0		20.0													24" CIPP	"A3" 306+15.11 TO "A3" 306+35.91 Rt			b
SHEET TOTAL					80.3	3				14.0	3.3	0.7	1,068	2	1		2	2	1	10	2.2	78.3		78.3	1	189.9			4			3.0	24.6		37.0	112.0	SHEET TOTAL				

CALCULATED- DESIGNED BY
CHECKED BY

REVISED BY
DATE REVISED

RANVIR JAWANDA
CARMEN RODRIGUEZ

FUNCTIONAL SUPERVISOR
CARLOS A. PORTILLO

STATE OF CALIFORNIA - DEPARTMENT OF TRANSPORTATION
NORTH REGION
DIVISION OF ENGINEERING

Caltrans

LAST REVISION DATE PLOTTED => 18-MAR-2015
06-05-14 TIME PLOTTED => 15:09

DRAINAGE QUANTITIES
DQ-3

Dist	COUNTY	ROUTE	POST MILES TOTAL PROJECT	SHEET No.	TOTAL SHEETS
03	ED	89	13.8/18.0	100	164

Fermin Barriga B. 6-9-14
REGISTERED CIVIL ENGINEER DATE

6-16-14
PLANS APPROVAL DATE

REGISTERED PROFESSIONAL ENGINEER — FERMIN BARRIGA — No. C47047 — Exp. 12-31-15 — CIVIL — STATE OF CALIFORNIA

THE STATE OF CALIFORNIA OR ITS OFFICERS OR AGENTS SHALL NOT BE RESPONSIBLE FOR THE ACCURACY OR COMPLETENESS OF SCANNED COPIES OF THIS PLAN SHEET.

NOTES:

1. (N)=NOT A SEPARATE PAY ITEM, FOR INFORMATION ONLY.
2. S=STANDARD, P=POSITIVE, D=DOWNDRAIN

DRAINAGE QUANTITIES

DRAINAGE PLAN SHEET No.	DRAINAGE PROFILES SHEET No.	DRAINAGE SYSTEM No.	DRAINAGE UNIT	ABANDON CULVERT	SAND BACKFILL	REMOVE CULVERT	REMOVE FES	REMOVE HEADWALL	REMOVE INLET	(N) HEIGHT OF INLET	36" CSP INLET (.168" THICK)	MINOR CONCRETE (MINOR STRUCTURE)	MINOR CONCRETE (Misc CONSTRUCTION)	Misc IRON AND STEEL	GRATE TYPE (N) 24-12X	GRATE TYPE (N) 36R	GRATE TYPE (N) 36RX	GRATE TYPE (N) 1/4" CHECKERED PLATE COVER	DI MARKER STAMPED CONCRETE IMPRINT	DI MARKER MEDALLION	MARKER (CULVERT)	CONCRETE BACKFILL (PIPE TRENCH)	PIPELINER CLEANING, INSPECTING, AND PREPARING CULVERT	PIPELINER 18" CURED-IN-PLACE PIPELINER	PIPELINER 24" CURED-IN-PLACE PIPELINER	CULVERTS (N) ELBOW SECTION	CULVERTS 18" APC	CULVERTS 24" APC	CULVERTS 49" X 33" CSPA (.138" THICK)	AFES 18" AFES	AFES 49" X 33" AFEPAS	(N) PIPE JOINT CLASSIFICATION	CLASS 4 PERMEABLE MATERIAL	FILTER FABRIC	CONCRETED-RSP (FACING, METHOD A)	RSP (FACING, METHOD B)	RSP FABRIC (CLASS 8)	DESCRIPTION	STATION	DRAINAGE PLAN SHEET No.	DRAINAGE SYSTEM No.	DRAINAGE UNIT
				LF	CY	LF	EA	EA	EA	LF	LF	CY	CY	LB	EA				EA		EA	CY	LF			EA	LF			EA		TYPE	CY	SQYD	CY	CY	SQYD					
D-9	DP-14	16	a			40.6																															REMOVE Culv	"A3" 310+91.42	D-9	16	a
			b																		2					40.6					S						18" APC				b
			c																																3.5	13.2	RSP (FACING, METHOD B)				c
			d							5.5	11.0			354				2		1														2.0	16.0			2 SAND TRAPS (TYPE 2)	"A3" 310+75.02 TO "A3" 310+99.20 Lt			d
			e																							2.0					S						18" APC				e
			f																																6.3	21.8	RSP (FACING, METHOD B)				f
D-10	DP-15	17	a							5.5	11.0		0.9	430			2		1																2.0	16.0			2 SAND TRAPS (TYPE 1)	"A3" 317+24.92	D-10	17	a
			b																							2.0					S						18" APC	"A3" 317+17.33 TO "A3" 317+34.72 Lt			b
			c																		2					4.8					S						18" APC				c
D-10	DP-16	18	a							5.5	11.0			354				2		1																2.0	16.0			2 SAND TRAPS (TYPE 2)	"A3" 320+08.84	D-10	18	a
			b																							2.0					S						18" APC	"A3" 320+02.82 TO "A3" 320+36.36 Lt			b
			c																																8.5	26.5	RSP (FACING, METHOD B)				c
			d			2.0																																	REMOVE Culv	"A3" 320+29.79			d
			e																							2.0					S						18" APC				e
			f					1																															REMOVE HEADWALL				f
			g									1.3																											PIPE Culv "L" HEADWALL				g
			h																		2		57.4	57.4													18" CIPP				h
	DP-17		i																																8.0	26.0	RSP (FACING, METHOD B)	"A3" 320+35.21			i
	DP-16		j			2.0																																	REMOVE Culv				j
			k																							2.0					S						18" APC				k
			l					1																															REMOVE HEADWALL				l
			m									0.9																											PIPE Culv HEADWALL				m
			n																															6.8	17.9	RSP (FACING, METHOD B)				n
SHEET TOTAL						44.6		2			33.0	2.2	0.9	1,138			2	4	1	2	6		57.4	57.4			55.4						6.0	48.0		33.1	105.4	SHEET TOTAL				

CALCULATED-DESIGNED BY: RANVIR JAWANDA
CHECKED BY: CARMEN RODRIGUEZ
FUNCTIONAL SUPERVISOR: CARLOS A. PORTILLO
REVISED BY
DATE REVISED

STATE OF CALIFORNIA - DEPARTMENT OF TRANSPORTATION
NORTH REGION
DIVISION OF ENGINEERING
Caltrans

DRAINAGE QUANTITIES
DQ-4

LAST REVISION: DATE PLOTTED => 18-MAR-2015; TIME PLOTTED => 15:09; 06-05-14

Dist	COUNTY	ROUTE	POST MILES TOTAL PROJECT	SHEET No.	TOTAL SHEETS
03	ED	89	13.8/18.0	101	164

Fermin Barriga B. 6-9-14
REGISTERED CIVIL ENGINEER DATE

6-16-14
PLANS APPROVAL DATE

FERMIN BARRIGA No. C47047 Exp. 12-31-15 CIVIL — REGISTERED PROFESSIONAL ENGINEER — STATE OF CALIFORNIA

THE STATE OF CALIFORNIA OR ITS OFFICERS OR AGENTS SHALL NOT BE RESPONSIBLE FOR THE ACCURACY OR COMPLETENESS OF SCANNED COPIES OF THIS PLAN SHEET.

NOTES:

1. (N)=NOT A SEPARATE PAY ITEM, FOR INFORMATION ONLY.
2. S=STANDARD, P=POSITIVE, D=DOWNDRAIN

DRAINAGE QUANTITIES

DRAINAGE PLAN SHEET No.	DRAINAGE PROFILES SHEET No.	DRAINAGE SYSTEM No.	DRAINAGE UNIT	ABANDON CULVERT	SAND BACKFILL	REMOVE CULVERT	REMOVE FES	REMOVE HEADWALL	REMOVE INLET	(N) HEIGHT OF INLET	36" CSP INLET (.168" THICK)	MINOR CONCRETE (MINOR STRUCTURE)	MINOR CONCRETE (Misc CONSTRUCTION)	Misc IRON AND STEEL	GRATE TYPE (N) 24-12X	GRATE TYPE (N) 36R	GRATE TYPE (N) 36RX	GRATE TYPE (N) 1/4" CHECKERED PLATE COVER	DI MARKER STAMPED CONCRETE IMPRINT	DI MARKER MEDALLION	MARKER (CULVERT)	CONCRETE BACKFILL (PIPE TRENCH)	PIPELINER CLEANING, INSPECTING, AND PREPARING CULVERT	PIPELINER 18" CURED-IN-PLACE PIPELINER	PIPELINER 24" CURED-IN-PLACE PIPELINER	CULVERTS (N) ELBOW SECTION	CULVERTS 18" APC	CULVERTS 24" APC	CULVERTS 49" X 33" CSPA (.138" THICK)	AFES 18" AFES	AFES 49" X 33" AFEPAS	(N) PIPE JOINT CLASSIFICATION	CLASS 4 PERMEABLE MATERIAL	FILTER FABRIC	CONCRETED-RSP (FACING, METHOD A)	RSP (FACING, METHOD B)	RSP FABRIC (CLASS 8)	DESCRIPTION	STATION	DRAINAGE PLAN SHEET No.	DRAINAGE SYSTEM No.	DRAINAGE UNIT
				LF	CY	LF	EA	EA	EA	LF	LF	CY	CY	LB	EA				EA		EA	CY	LF			EA	LF			EA		TYPE	CY	SQYD	CY	CY	SQYD						
D-10	DP-17	19	a																		2						37.9					S						18" APC	"A3" 326+25.00	D-10	19	a
			b																																	3.5	13.2	RSP (FACING, METHOD B)				b
			c							3.7		1.4	0.3	239	1				1																		Mod DI (TYPE GO)	"A3" 326+21.96 TO "A3" 326+28.09 L+			c
	DP-18		d	54.4	3.6																																ABANDON Culv	"A3" 326+73.48			d
D-11	DP-18	20	a																		2			32.2	32.2												18" CIPP	"A3" 332+46.36	D-11	20	a
D-11	DP-19	21	a																		2			64.3	64.3												18" CIPP	"A3" 340+57.61	D-11	21	a
			b																																	3.5	13.2	RSP (FACING, METHOD B)				b
D-11	DP-19	22	a																		2			44.2	44.2												18" CIPP	"A3" 341+86.75	D-11	22	a
D-11	DP-20	23	a																		2			34.2	34.2												18" CIPP	"A3" 344+62.59	D-11	23	a
D-12	DP-20	24	a							5.5	5.5		0.4	215			1		1														1.0	8.6				SAND TRAP (TYPE 1)	"A3" 345+53.21	D-12	24	a
			b																								10.3					S						18" APC				b
			c																																	3.5	13.2	RSP (FACING, METHOD B)				c
			d																		2						30.9					S						18" APC				d
			e																			3.9																CONCRETE BACKFILL (PIPE TRENCH)				e
			f																												1						18" AFES				f
D-12	DP-21	25	a							5.5	11.0		0.9	430			2		1															2.0	16.0				2 SAND TRAPS (TYPE 1)	"A3" 352+09.90 TO "A3" 352+20.10 R+	D-12	25	a
			b																								2.0					S						18" APC				b
			c																								12.3					S						18" APC	"A3" 352+17.50			c
			d																																	3.5	13.2	RSP (FACING, METHOD B)				d
SHEET TOTAL				54.4	3.6						16.5	1.4	1.6	884	1		3		3		12	3.9	174.9	174.9			93.4			1			3.0	24.6		14.0	52.7	SHEET TOTAL				

DRAINAGE QUANTITIES
DQ-5

CALCULATED-DESIGNED BY
CHECKED BY
RANVIR JAWANDA
CARMEN RODRIGUEZ
REVISED BY
DATE REVISED
FUNCTIONAL SUPERVISOR
CARLOS A. PORTILLO
STATE OF CALIFORNIA - DEPARTMENT OF TRANSPORTATION
NORTH REGION
DIVISION OF ENGINEERING
Caltrans

LAST REVISION DATE PLOTTED => 18-MAR-2015
06-05-14 TIME PLOTTED => 15:09

BORDER LAST REVISED 7/2/2010
USERNAME => s130875
DGN FILE => 0300000224id005.dgn
RELATIVE BORDER SCALE IS IN INCHES 0 1 2 3
UNIT 0305
PROJECT NUMBER & PHASE 03000002241

Dist	COUNTY	ROUTE	POST MILES TOTAL PROJECT	SHEET No.	TOTAL SHEETS
03	ED	89	13.8/18.0	102	164

Fermin Barriga B. 6-9-14
REGISTERED CIVIL ENGINEER DATE

FERMIN BARRIGA No. C47047 Exp. 12-31-15 CIVIL — REGISTERED PROFESSIONAL ENGINEER — STATE OF CALIFORNIA

6-16-14
PLANS APPROVAL DATE

THE STATE OF CALIFORNIA OR ITS OFFICERS OR AGENTS SHALL NOT BE RESPONSIBLE FOR THE ACCURACY OR COMPLETENESS OF SCANNED COPIES OF THIS PLAN SHEET.

NOTES:

1. (N)=NOT A SEPARATE PAY ITEM, FOR INFORMATION ONLY.
2. S=STANDARD, P=POSITIVE, D=DOWNDRAIN

DRAINAGE QUANTITIES

DRAINAGE PLAN SHEET No.	DRAINAGE PROFILES SHEET No.	DRAINAGE SYSTEM No.	DRAINAGE UNIT	ABANDON CULVERT LF	SAND BACKFILL CY	REMOVE CULVERT LF	REMOVE FES EA	REMOVE HEADWALL EA	REMOVE INLET EA	(N) HEIGHT OF INLET LF	36" CSP INLET (.168" THICK) LF	MINOR CONCRETE (MINOR STRUCTURE) CY	MINOR CONCRETE (Misc CONSTRUCTION) CY	Misc IRON AND STEEL LB	GRATE TYPE (N) 24-12X EA	GRATE TYPE (N) 36R EA	GRATE TYPE (N) 36RX EA	GRATE TYPE (N) 1/4" CHECKERED PLATE COVER EA	DI MARKER STAMPED CONCRETE IMPRINT EA	DI MARKER MEDALLION EA	MARKER (CULVERT) EA	CONCRETE BACKFILL (PIPE TRENCH) CY	PIPELINER CLEANING, INSPECTING, AND PREPARING CULVERT LF	PIPELINER 18" CURED-IN-PLACE PIPELINER LF	PIPELINER 24" CURED-IN-PLACE PIPELINER LF	CULVERTS (N) ELBOW SECTION EA	CULVERTS 18" APC LF	CULVERTS 24" APC LF	CULVERTS 49" X 33" CSPA (.138" THICK) LF	AFES 18" AFES EA	AFES 49" X 33" AFEPAS EA	(N) PIPE JOINT CLASSIFICATION TYPE	CLASS 4 PERMEABLE MATERIAL CY	FILTER FABRIC SQYD	CONCRETED-RSP (FACING, METHOD A) CY	RSP (FACING, METHOD B) CY	RSP FABRIC (CLASS 8) SQYD	DESCRIPTION	STATION	DRAINAGE PLAN SHEET No.	DRAINAGE SYSTEM No.	DRAINAGE UNIT
D-12	DP-22	26	a							5.5	11.0			354				2		1																			2 SAND TRAPS (TYPE 2)	"A3" 353+26.41	D-12	26	a
			b																								2.0					S							18" APC				b
			c																																				7.3	24.9	RSP (FACING, METHOD B)	"A3" 353+20.01 TO "A3" 353+74.33 Lt			c
			d																																			15.2	43.4	RSP (FACING, METHOD B)				d
D-12	DP-23	27	a			12.0																																			REMOVE Culv	"A3" 354+46.09	D-12	27	a
			b	16.0	1.0																																				ABANDON Culv				b
			c																			1.9																			CONCRETE BACKFILL (PIPE TRENCH)				c
			d																		2					26.7					S							18"APC				d
			e							6.0		1.6	0.4	239	1				1																				SAND TRAP (TYPE G1)				e
			f																							57.2					S							18" APC				f
			g							5.3		1.5	0.4	239	1				1																				DI (TYPE G1)	"A3" 354+89.34			g
			h																							111.7					S							18" APC				h
			i							3.4		1.0	0.4	239	1				1																				DI (TYPE G1)				i
			j																							26.5					S							18" APC				j
			k																											1										18" AFES				k
D-12	DP-24	28	a							3.7		1.4	0.3	239	1				1																				Mod DI (TYPE GO)	"A3" 356+44.10	D-12	28	a
			b																		1						33.6				S							24" APC				b
			c							7.9		2.6	0.5	239	1				1																				SAND TRAP (TYPE G2)				c
			d																		1						49.7				S							24" APC; Culv Mkr ON SB SIDE				d
			e																																			5.7	19.0	RSP (FACING, METHOD B)				e
D-13	DP-24	29	a																							19.9					S							18" APC	"A3" 361+51.21	D-13	29	a
			b																																			3.5	13.2	RSP (FACING, METHOD B)				b
			c							5.5	11.0		0.9	430			2		1																				2.0	16.0	2 SAND TRAPS (TYPE 1)	"A3" 361+50.41 TO "A3" 361+60.87 Rt			c
			d																							2.0					S							18" APC				d
SHEET TOTAL				16.0	1.0	12.0					22.0	8.1	2.9	1,979	5		2	2	6	1	4	1.9					246.0	83.3		1			6.4	44.6		31.6	100.4	SHEET TOTAL				

CALCULATED-DESIGNED BY
CHECKED BY
RANVIR JAWANDA
CARMEN RODRIGUEZ
REVISED BY
DATE REVISED
FUNCTIONAL SUPERVISOR
CARLOS A. PORTILLO

STATE OF CALIFORNIA - DEPARTMENT OF TRANSPORTATION
Caltrans®
NORTH REGION
DIVISION OF ENGINEERING

DRAINAGE QUANTITIES
DQ-6

LAST REVISION DATE PLOTTED => 18-MAR-2015
06-05-14 TIME PLOTTED => 15:09

BORDER LAST REVISED 7/2/2010
USERNAME => s130875
DGN FILE => 03000002241id006.dgn
RELATIVE BORDER SCALE IS IN INCHES 0 1 2 3
UNIT 0305
PROJECT NUMBER & PHASE 03000002241

NOTES:

1. (N)=NOT A SEPARATE PAY ITEM, FOR INFORMATION ONLY.
2. S=STANDARD, P=POSITIVE, D=DOWNDRAIN

Dist	COUNTY	ROUTE	POST MILES TOTAL PROJECT	SHEET No.	TOTAL SHEETS
03	ED	89	13.8/18.0	103	164

Fermin Barriga B. 6-9-14
REGISTERED CIVIL ENGINEER DATE

FERMIN BARRIGA No. C47047 Exp. 12-31-15 CIVIL — REGISTERED PROFESSIONAL ENGINEER — STATE OF CALIFORNIA

6-16-14
PLANS APPROVAL DATE

THE STATE OF CALIFORNIA OR ITS OFFICERS OR AGENTS SHALL NOT BE RESPONSIBLE FOR THE ACCURACY OR COMPLETENESS OF SCANNED COPIES OF THIS PLAN SHEET.

DRAINAGE QUANTITIES

DRAINAGE PLAN SHEET No.	DRAINAGE PROFILES SHEET No.	DRAINAGE SYSTEM No.	DRAINAGE UNIT	ABANDON CULVERT	SAND BACKFILL	REMOVE CULVERT	REMOVE FES	REMOVE HEADWALL	REMOVE INLET	(N) HEIGHT OF INLET	36" CSP INLET (.168" THICK)	MINOR CONCRETE (MINOR STRUCTURE)	MINOR CONCRETE (Misc CONSTRUCTION)	Misc IRON AND STEEL	GRATE TYPE (N) 24-12X	GRATE TYPE (N) 36R	GRATE TYPE (N) 36RX	GRATE TYPE (N) 1/4" CHECKERED PLATE COVER	DI MARKER STAMPED CONCRETE IMPRINT	DI MARKER MEDALLION	MARKER (CULVERT)	CONCRETE BACKFILL (PIPE TRENCH)	PIPELINER CLEANING, INSPECTING, AND PREPARING CULVERT	PIPELINER 18" CURED-IN-PLACE PIPELINER	PIPELINER 24" CURED-IN-PLACE PIPELINER	CULVERTS (N) ELBOW SECTION	CULVERTS 18" APC	CULVERTS 24" APC	CULVERTS 49" X 33" CSPA (.138" THICK)	AFES 18" AFES	AFES 49" X 33" AFEPAS	(N) PIPE JOINT CLASSIFICATION	CLASS 4 PERMEABLE MATERIAL	FILTER FABRIC	CONCRETED-RSP (FACING, METHOD A)	RSP (FACING, METHOD B)	RSP FABRIC (CLASS 8)	DESCRIPTION	STATION	DRAINAGE PLAN SHEET No.	DRAINAGE SYSTEM No.	DRAINAGE UNIT
				LF	CY	LF	EA	EA	EA	LF	LF	CY	CY	LB	EA				EA		EA	CY	LF			EA	LF			EA		TYPE	CY	SQYD	CY	CY	SQYD					
D-13	N/A	30	a																															10.2		36.6	CONCRETED-RSP (FACING, METHOD A) SEE DRAINAGE DETAILS	"A3" 371+60.59 R†	D-13	30	a
D-13	N/A	31	a																															10.2		36.6	CONCRETED-RSP (FACING, METHOD A) SEE DRAINAGE DETAILS	"A3" 372+11.30	D-13	31	a
D-14	N/A	32	a																															10.2		36.6	CONCRETED-RSP (FACING, METHOD A) SEE DRAINAGE DETAILS	"A3" 372+60.41	D-14	32	a
D-14	N/A	33	a																															10.2		36.6	CONCRETED-RSP (FACING, METHOD A) SEE DRAINAGE DETAILS	"A3" 373+84.12	D-14	33	a
D-14	N/A	34	a																															15.6		46.3	CONCRETED-RSP (FACING, METHOD A) SEE DRAINAGE DETAILS	"A3" 375+18.87	D-14	34	a
D-14	N/A	35	a																															15.6		46.3	CONCRETED-RSP (FACING, METHOD A) SEE DRAINAGE DETAILS	"A3" 376+30.07	D-14	35	a
D-14	N/A	36	a																															10.2		36.6	CONCRETED-RSP (FACING, METHOD A) SEE DRAINAGE DETAILS	"A3" 377+61.00	D-14	36	a
			b											236		1																					36R GRATE				b
SHEET TOTAL														236		1																		82.2		275.7	SHEET TOTAL				

CALCULATED-DESIGNED BY
CHECKED BY
RANVIR JAWANDA
CARMEN RODRIGUEZ
REVISED BY
DATE REVISED
FUNCTIONAL SUPERVISOR
CARLOS A. PORTILLO

STATE OF CALIFORNIA - DEPARTMENT OF TRANSPORTATION
NORTH REGION
DIVISION OF ENGINEERING
Caltrans®

DRAINAGE QUANTITIES
DQ-7

LAST REVISION: DATE PLOTTED => 18-MAR-2015
04-29-14 TIME PLOTTED => 15:09

BORDER LAST REVISED 7/2/2010
USERNAME => s130875
DGN FILE => 0300000224id007.dgn
RELATIVE BORDER SCALE IS IN INCHES 0 1 2 3
UNIT 0305
PROJECT NUMBER & PHASE 03000002241

Dist	COUNTY	ROUTE	POST MILES TOTAL PROJECT	SHEET No.	TOTAL SHEETS
03	ED	89	13.8/18.0	104	164

Fermin Barriga B. 6-9-14
REGISTERED CIVIL ENGINEER DATE

6-16-14
PLANS APPROVAL DATE

FERMIN BARRIGA No. C47047 Exp. 12-31-15 CIVIL — REGISTERED PROFESSIONAL ENGINEER — STATE OF CALIFORNIA

THE STATE OF CALIFORNIA OR ITS OFFICERS OR AGENTS SHALL NOT BE RESPONSIBLE FOR THE ACCURACY OR COMPLETENESS OF SCANNED COPIES OF THIS PLAN SHEET.

NOTES:

1. (N)=NOT A SEPARATE PAY ITEM, FOR INFORMATION ONLY.
2. S=STANDARD, P=POSITIVE, D=DOWNDRAIN

DRAINAGE QUANTITIES

DRAINAGE PLAN SHEET No.	DRAINAGE PROFILES SHEET No.	DRAINAGE SYSTEM No.	DRAINAGE UNIT	ABANDON CULVERT	SAND BACKFILL	REMOVE CULVERT	REMOVE FES	REMOVE HEADWALL	REMOVE INLET	(N) HEIGHT OF INLET	36" CSP INLET (.168" THICK)	MINOR CONCRETE (MINOR STRUCTURE)	MINOR CONCRETE (Misc CONSTRUCTION)	Misc IRON AND STEEL	GRATE TYPE (N)				DI MARKER		MARKER (CULVERT)	CONCRETE BACKFILL (PIPE TRENCH)	PIPELINER			CULVERTS				AFES		(N) PIPE JOINT CLASSIFICATION	CLASS 4 PERMEABLE MATERIAL	FILTER FABRIC	CONCRETED-RSP (FACING, METHOD A)	RSP (FACING, METHOD B)	RSP FABRIC (CLASS 8)	DESCRIPTION	STATION	DRAINAGE PLAN SHEET No.	DRAINAGE SYSTEM No.	DRAINAGE UNIT
															24-12X	36R	36RX	1/4" CHECKERED PLATE COVER	STAMPED CONCRETE IMPRINT	MEDALLION			CLEANING, INSPECTING, AND PREPARING CULVERT	18" CURED-IN-PLACE PIPELINER	24" CURED-IN-PLACE PIPELINER	(N) ELBOW SECTION	18" APC	24" APC	49" X 33" CSPA (.138" THICK)	18" AFES	49" X 33" AFEPAS									
				LF	CY	LF	EA	EA	EA	LF	LF	CY	CY	LB	EA				EA		EA	CY	LF			EA	LF			EA		TYPE	CY	SQYD	CY	CY	SQYD				
D-14	N/A	37	a																															15.6		46.3	CONCRETED-RSP (FACING, METHOD A) SEE DRAINAGE DETAILS	"A3" 378+52.72	D-14	37	a
			b											236		1																				36R GRATE				b
D-14	N/A	38	a																															10.2		36.6	CONCRETED-RSP (FACING, METHOD A) SEE DRAINAGE DETAILS	"A3" 379+10.03	D-14	38	a
D-14	N/A	39	a																															10.2		36.6	CONCRETED-RSP (FACING, METHOD A) SEE DRAINAGE DETAILS	"A3" 380+19.11	D-14	39	a
D-14	N/A	40	a																															15.6		46.3	CONCRETED-RSP (FACING, METHOD A) SEE DRAINAGE DETAILS	"A3" 382+16.49	D-14	40	a
D-15	N/A	41	a																															15.6		46.3	CONCRETED-RSP (FACING, METHOD A) SEE DRAINAGE DETAILS	"A3" 392+94.79	D-15	41	a
D-15	N/A	42	a																															15.6		46.3	CONCRETED-RSP (FACING, METHOD A) SEE DRAINAGE DETAILS	"A3" 394+12.31	D-15	42	a
D-15	N/A	43	a																															15.6		46.3	CONCRETED-RSP (FACING, METHOD A) SEE DRAINAGE DETAILS	"A3" 395+36.31	D-15	43	a
SHEET TOTAL														236		1																		98.4		304.6	SHEET TOTAL				

CALCULATED-DESIGNED BY
CHECKED BY
REVISED BY
DATE REVISED
RANVIR JAWANDA
CARMEN RODRIGUEZ
FUNCTIONAL SUPERVISOR
CARLOS A. PORTILLO
STATE OF CALIFORNIA - DEPARTMENT OF TRANSPORTATION
Caltrans
NORTH REGION
DIVISION OF ENGINEERING

DRAINAGE QUANTITIES
DQ-8

LAST REVISION DATE PLOTTED => 18-MAR-2015
04-29-14 TIME PLOTTED => 5:09

BORDER LAST REVISED 7/2/2010
USERNAME => s130875
DGN FILE => 03000000224id008.dgn
RELATIVE BORDER SCALE IS IN INCHES 0 1 2 3
UNIT 0305
PROJECT NUMBER & PHASE 03000002241

Dist	COUNTY	ROUTE	POST MILES TOTAL PROJECT	SHEET No.	TOTAL SHEETS
03	ED	89	13.8/18.0	105	164

Fermin Barriga B. 6-9-14
REGISTERED CIVIL ENGINEER DATE

6-16-14
PLANS APPROVAL DATE

REGISTERED PROFESSIONAL ENGINEER
FERMIN BARRIGA
No. C47047
Exp. 12-31-15
CIVIL
STATE OF CALIFORNIA

THE STATE OF CALIFORNIA OR ITS OFFICERS OR AGENTS SHALL NOT BE RESPONSIBLE FOR THE ACCURACY OR COMPLETENESS OF SCANNED COPIES OF THIS PLAN SHEET.

NOTES:

1. FOR ADDITIONAL SETTLING BASIN INFORMATION, SEE DRAINAGE DETAILS SHEET DD-3 AND DRAINAGE PLAN SHEETS D-3 AND D-4.
2. EXCAVATION FOR CLASS 4 PERMEABLE MATERIAL SHALL BE PAID FOR AS ROADWAY EXCAVATION.

SETTLING BASIN QUANTITIES

DRAINAGE PLAN SHEET No.	STATION	CLASS 4 PERMEABLE * MATERIAL	ROADWAY ** EXCAVATION	RSP FABRIC (CLASS 8) *	RSP (NO. 3, METHOD B) *	RSP (FACING, METHOD B) *
		CY	CY	SQYD	CY	CY
D-3	"A3" 221+31.29, 34.7' Rt	9.0	19.0	31.8	5.8	4.4
D-4	"A3" 226+15.22, 64.5' Rt	16.9	111.4	149.7	12.7	33.5
D-4	"A3" 226+15.22, 110.3' Rt	40.9	136.3	239.5	17.0	33.0
D-4	"A3" 230+31.81, 56.2' Rt	114.5	260.8	164.3	25.0	15.2
	SUBTOTAL	181.4	527.5	585.3	60.5	86.1

* - SEE DRAINAGE SUMMARY QUANTITIES SHEET DQ-10 FOR TOTAL CLASS 4 PERMEABLE MATERIAL , RSP FABRIC (CLASS 8), RSP (NO. 3, METHOD B) AND RSP (FACING, METHOD B) QUANTITIES.

** - SEE SUMMARY OF QUANTITIES SHEET Q-1 FOR TOTAL ROADWAY EXCAVATION QUANTITY.

DRAINAGE QUANTITIES
DQ-9

REVISED BY | DATE REVISED
RANVIR JAWANDA | CARMEN RODRIGUEZ
CALCULATED-DESIGNED BY | CHECKED BY
FUNCTIONAL SUPERVISOR: CARLOS A. PORTILLO
STATE OF CALIFORNIA - DEPARTMENT OF TRANSPORTATION
Caltrans®
NORTH REGION
DIVISION OF ENGINEERING

LAST REVISION | DATE PLOTTED => 18-MAR-2015
06-04-14 | TIME PLOTTED => 15:09

BORDER LAST REVISED 7/2/2010
USERNAME => s130875
DGN FILE => 0300000224id009.dgn
RELATIVE BORDER SCALE IS IN INCHES 0 1 2 3
UNIT 0305
PROJECT NUMBER & PHASE 03000002241

Dist	COUNTY	ROUTE	POST MILES TOTAL PROJECT	SHEET No.	TOTAL SHEETS
03	ED	89	13.8/18.0	106	164

Fermin Barriga 6-9-14
REGISTERED CIVIL ENGINEER DATE

6-16-14
PLANS APPROVAL DATE

FERMIN BARRIGA No. C47047 Exp. 12-31-15 CIVIL — REGISTERED PROFESSIONAL ENGINEER — STATE OF CALIFORNIA

THE STATE OF CALIFORNIA OR ITS OFFICERS OR AGENTS SHALL NOT BE RESPONSIBLE FOR THE ACCURACY OR COMPLETENESS OF SCANNED COPIES OF THIS PLAN SHEET.

NOTE:

1. (N) = NOT A SEPARATE PAY ITEM, FOR INFORMATION ONLY.

DRAINAGE SUMMARY QUANTITIES

	ABANDON CULVERT	SAND BACKFILL	REMOVE CULVERT	REMOVE FES	REMOVE HEADWALL	REMOVE INLET	36" CSP INLET (.168" THICK)	MINOR CONCRETE (MINOR STRUCTURE)	MINOR CONCRETE (Misc CONSTRUCTION)	Misc IRON AND STEEL	GRATE TYPE (N)				DI MARKER		MARKER (CULVERT)	CONCRETE BACKFILL (PIPE TRENCH)	PIPELINER			CULVERTS				AFES		CLASS 4 PERMEABLE MATERIAL	FILTER FABRIC	CONCRETED-RSP (FACING, METHOD A)	RSP (NO. 3, METHOD B)	RSP (FACING, METHOD B)	RSP FABRIC (CLASS 8)	
											24-12X	36R	36RX	1/4" CHECKERED PLATE COVER	STAMPED CONCRETE IMPRINT	MEDALLION			CLEANING, INSPECTING, AND PREPARING CULVERT	18" CURED-IN-PLACE PIPELINER	24" CURED-IN-PLACE PIPELINER	(N) ELBOW SECTION	18" APC	24" APC	49" X 33" CSPA (.138" THICK)	18" AFES	49" X 33" AFEPAS						
SHEET No.	LF	CY	LF	EA	EA	EA	LF	CY	CY	LB	EA				EA		EA	CY	LF			EA	LF			EA		CY	SQYD	CY	CY	CY	SQYD	SHEET No.
DQ-1 SHEET TOTAL			120.0	5		2	16.5			531				3		2	8		95.9	95.9			115.2			5		3.0	24.6			23.4	85.7	DQ-1 SHEET TOTAL
DQ-2 SHEET TOTAL			82.3	5		1	34.5			1,301	1			6		3	9		38.7	38.7			40.3		54.2	5	2	6.0	48.0			46.9	148.3	DQ-2 SHEET TOTAL
DQ-3 SHEET TOTAL			80.3	3			14.0	3.3	0.7	1,068	2	1		2	2	1	10	2.2	78.3		78.3	1	189.9			4		3.0	24.6			37.0	112.0	DQ-3 SHEET TOTAL
DQ-4 SHEET TOTAL			44.6		2		33.0	2.2	0.9	1,138			2	4	1	2	6		57.4	57.4			55.4					6.0	48.0			33.1	105.4	DQ-4 SHEET TOTAL
DQ-5 SHEET TOTAL	54.4	3.6					16.5	1.4	1.6	884	1		3		3		12	3.9	174.9	174.9			93.4			1		3.0	24.6			14.0	52.7	DQ-5 SHEET TOTAL
DQ-6 SHEET TOTAL	16.0	1.0	12.0				22.0	8.1	2.9	1,979	5		2	2	6	1	4	1.9					246.0	83.3		1		6.4	44.6			31.6	100.4	DQ-6 SHEET TOTAL
DQ-7 SHEET TOTAL										236		1																	82.2			275.7	DQ-7 SHEET TOTAL
DQ-8 SHEET TOTAL										236		1																	98.4			304.6	DQ-8 SHEET TOTAL
DQ-9 SHEET TOTAL																												181.4		60.5	86.1	585.3	DQ-9 SHEET TOTAL
Q-2 SHEET TOTAL								1.9																					20.30	17.1	96.5	336.9	Q-2 SHEET TOTAL
GRAND TOTAL	70.4	4.6	339.2	13	2	3	136.5	16.9	6.1	7,373	9	3	7	17	21		49	8.0	445.2	366.9	78.3	1	740.2	83.3	54.2	16	2	208.8	214.4	200.9	77.6	368.6	2,107.0	GRAND TOTAL

APC ALLOWABLE PIPE MATERIAL AND PROTECTION (N)

DESIGNATION	GALVANIZED CORRUGATED STEEL PIPE (CSP) 2 ⅔" X ½" CORRUGATION			PLASTIC PIPE (PP)			
				POLYVINYL CHLORIDE (PVC)		HIGH DENSITY POLYETHYLENE (HDPE)	
	SIZE	THICKNESS	TYPE	SIZE	TYPE	SIZE	TYPE
18" APC	18"	0.079 (14 GAGE)	ANNULAR OR HELICAL	18"	CORRUGATED OR RIBBED	18"	CORR TYPE S, CORR TYPE C, RIBBED
24" APC	24"	0.109 (12 GAGE)	ANNULAR OR HELICAL	24"	CORRUGATED OR RIBBED	24"	CORR TYPE S, CORR TYPE C, RIBBED

DRAINAGE QUANTITIES
DQ-10

REVISED BY | DATE REVISED
RANVIR JAWANDA | CARMEN RODRIGUEZ
CALCULATED-DESIGNED BY | CHECKED BY
FUNCTIONAL SUPERVISOR: CARLOS A. PORTILLO
STATE OF CALIFORNIA - DEPARTMENT OF TRANSPORTATION
NORTH REGION DIVISION OF ENGINEERING
Caltrans

LAST REVISION | DATE PLOTTED => 18-MAR-2015 | TIME PLOTTED => 15:09
06-06-14

BORDER LAST REVISED 7/2/2010 | USERNAME => s130875 | DGN FILE => 0300000224id010.dgn | RELATIVE BORDER SCALE IS IN INCHES 0 1 2 3 | UNIT 0305 | PROJECT NUMBER & PHASE 03000002241

Dist	COUNTY	ROUTE	POST MILES TOTAL PROJECT	SHEET No.	TOTAL SHEETS
03	ED	89	13.8/18.0	107	164

Kris M. Albers 6-9-14
REGISTERED CIVIL ENGINEER DATE

6-16-14
PLANS APPROVAL DATE

REGISTERED PROFESSIONAL ENGINEER
KRIS M. ALBERS
No. 49986
Exp. 6-30-15
CIVIL
STATE OF CALIFORNIA

THE STATE OF CALIFORNIA OR ITS OFFICERS OR AGENTS SHALL NOT BE RESPONSIBLE FOR THE ACCURACY OR COMPLETENESS OF SCANNED COPIES OF THIS PLAN SHEET.

STATIONARY MOUNTED CONSTRUCTION AREA SIGNS

SIGN LETTER	SIGN CODE		PANEL SIZE	SIGN MESSAGE	NUMBER OF POST AND SIZE	NUMBER OF SIGNS
	FEDERAL	CALIFORNIA				
A	G20-1 [Spec](5)		60" x 30"	ROAD WORK NEXT 5 MILES	2 - 4" x 4"	2
B		C40(Mod)	48" x 36"	TRAFFIC FINES DOUBLED IN WORK ZONES	1 - 4" x 6"	2
C	W20-1	C23	48" x 48"	ROAD WORK AHEAD	1 - 6" x 6"	1
D	G20-2	C14	36" x 18"	END ROAD WORK	1 - 4" x 4"	3

SIGN DETAILS

(A) G20-1 [Spec](5)

ROAD WORK
NEXT 5 MILES

60"x30"

6" C SERIES LETTERS

RETROREFLECTIVE ORANGE BACKGROUND WITH BLACK LEGEND AND BORDER.

(B) C40(Mod)<CA>

TRAFFIC FINES
DOUBLED IN
WORK ZONES

48"x36"

4" D SERIES LETTERS

RETROREFLECTIVE WHITE BACKGROUND WITH BLACK LEGEND AND BORDER.

NOTES:

1. EXACT SIGN LOCATION TO BE DETERMINED BY THE ENGINEER.
2. FOR ADDITIONAL CONSTRUCTION AREA SIGNS, SEE MOTORIST INFORMATION PLAN SHEET MI-1.

LEGEND

(X) CONSTRUCTION AREA SIGN LETTER

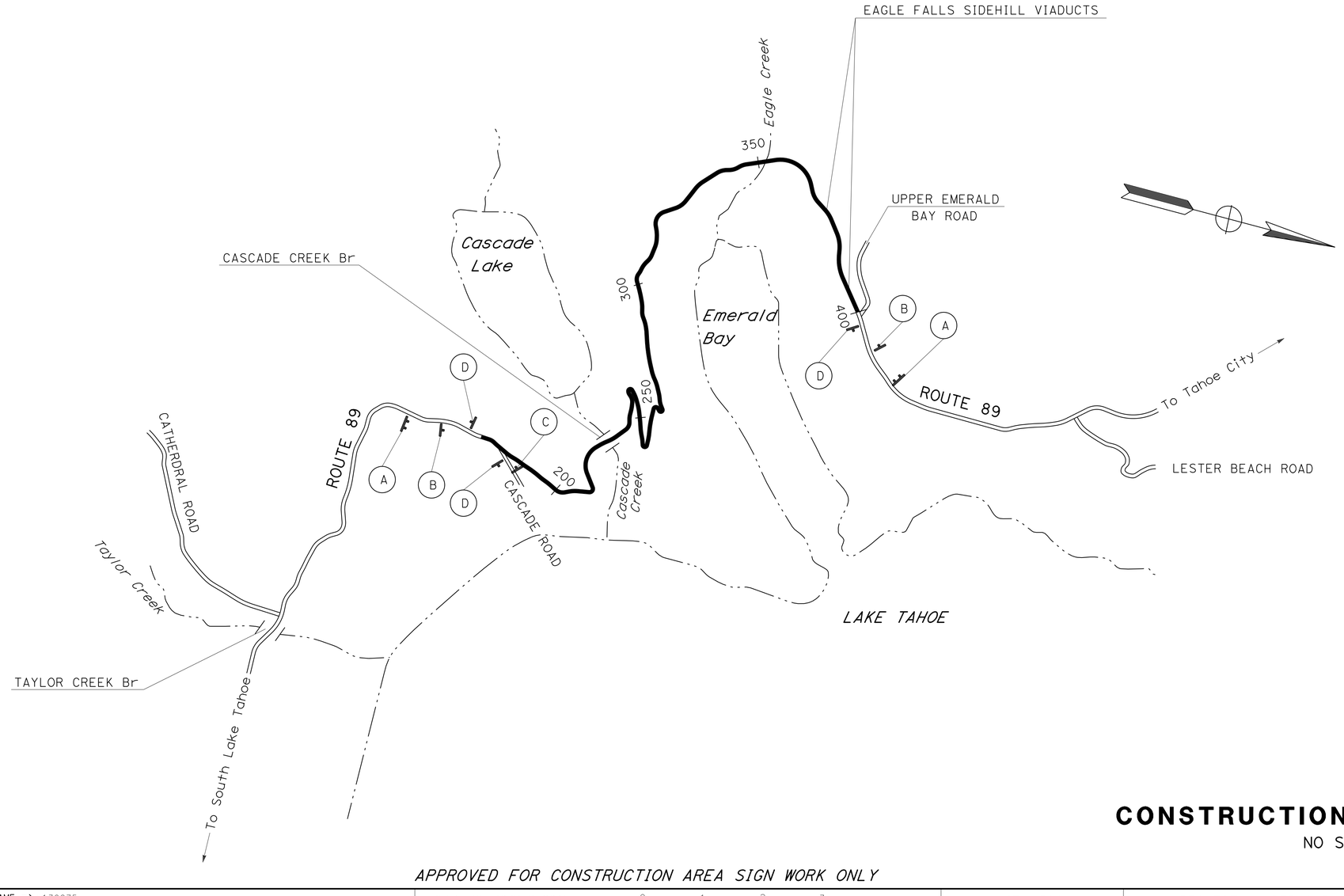

CONSTRUCTION AREA SIGNS

NO SCALE

CS-1

APPROVED FOR CONSTRUCTION AREA SIGN WORK ONLY

REVISED BY | DATE REVISED
CHUCK COOK | KRIS ALBERS
CALCULATED-DESIGNED BY | CHECKED BY
FUNCTIONAL SUPERVISOR: SERGIO ACEVES
STATE OF CALIFORNIA - DEPARTMENT OF TRANSPORTATION
Caltrans®
TRAFFIC

LAST REVISION | DATE PLOTTED => 18-MAR-2015
02-20-14 | TIME PLOTTED => 15:09

BORDER LAST REVISED 7/2/2010
USERNAME => s130875
DGN FILE => 03000002241a001.dgn
RELATIVE BORDER SCALE IS IN INCHES 0 1 2 3
UNIT 0390
PROJECT NUMBER & PHASE 03000002241

Dist	COUNTY	ROUTE	POST MILES TOTAL PROJECT	SHEET No.	TOTAL SHEETS
03	ED	89	13.8/18.0	108	164

Kris M. Albers 6-9-14
REGISTERED CIVIL ENGINEER DATE

6-16-14
PLANS APPROVAL DATE

REGISTERED PROFESSIONAL ENGINEER
KRIS M. ALBERS
No. 49986
Exp. 6-30-15
CIVIL
STATE OF CALIFORNIA

THE STATE OF CALIFORNIA OR ITS OFFICERS OR AGENTS SHALL NOT BE RESPONSIBLE FOR THE ACCURACY OR COMPLETENESS OF SCANNED COPIES OF THIS PLAN SHEET.

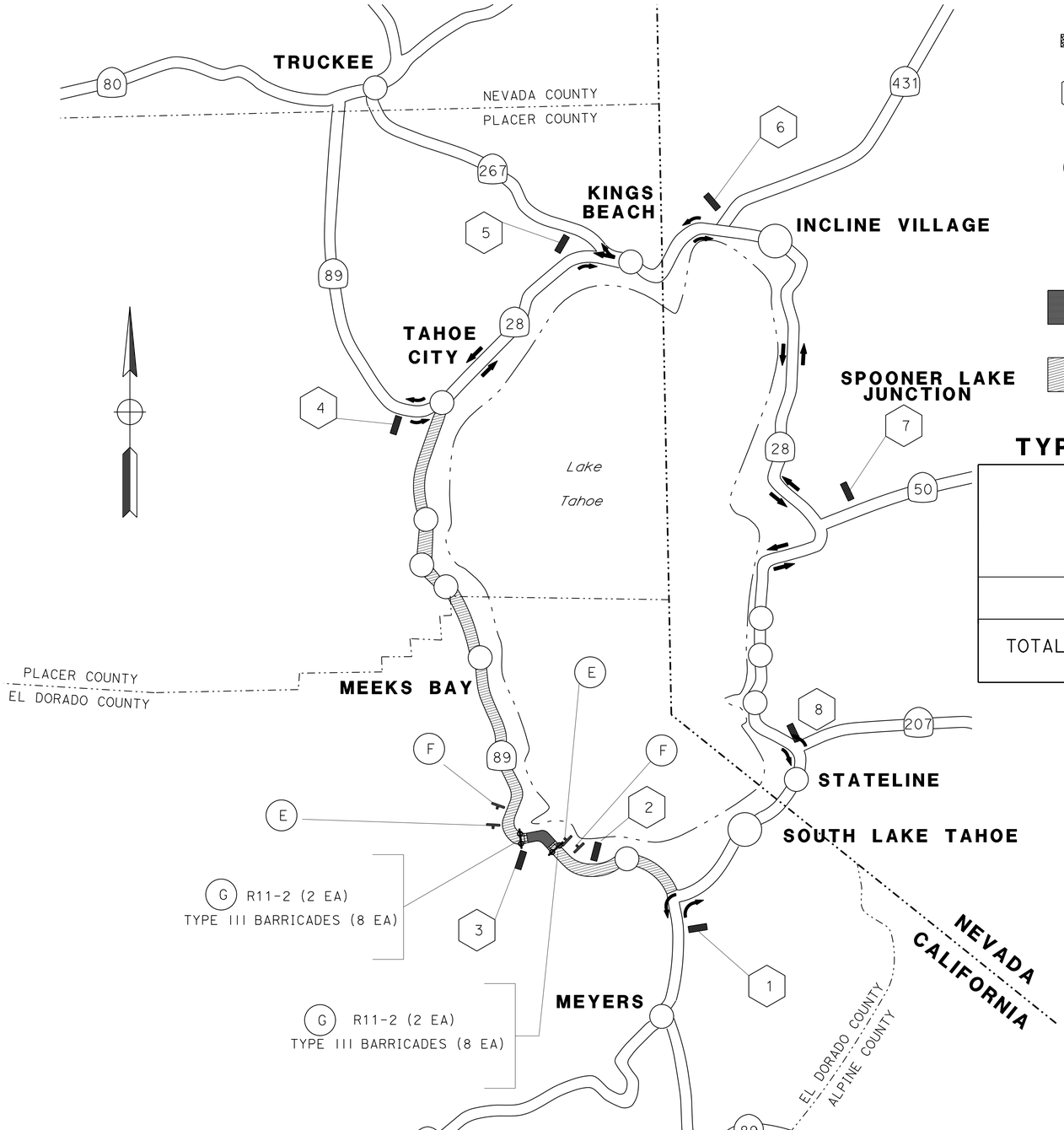

LEGEND

- PCMS
- NO. — PCMS NUMBER
- X — CONSTRUCTION AREA SIGN LETTER
- DIRECTION OF TRAVEL
- WORK ZONE (CLOSURE)
- LOCAL USE/ACCESS ONLY

TYPE III BARRICADE

	TYPE III BARRICADE	
	FURNISH	INSTALL
	EA	
	16	16
TOTAL	16	

PORTABLE CHANGEABLE MESSAGE SIGN LOCATION

PCMS	LOCATION			DESCRIPTION
	COUNTY	ROUTE	PM	
1	ED	50	75.5	JUST WESTERLY CVS DWY
2	ED	89	13.1	TRUCK TURN AROUND POINT FOR NB TRAFFIC
3	ED	89	16.3	TRUCK TURN AROUND POINT FOR SB TRAFFIC
4	PLA	89	8.6	1200 FT +/- NORTHERLY WEST LAKE BLVD
5	PLA	267	9.9	JUST NORTHERLY SIGNAL AHEAD SIGN FSBT
6	WASHOE	431 AT 28	N/A	JUST NORTHERLY ROUNDABOUT SPLITTER ISLAND FSBT
7	DOUGLAS	50 AT 28	N/A	700 FT EASTERLY
8	DOUGLAS	207 AT 28	N/A	170 FT EASTERLY

STATIONARY MOUNTED CONSTRUCTION AREA SIGNS

SIGN LETTER	SIGN CODE	PANEL SIZE	SIGN MESSAGE	NUMBER OF POST AND SIZE	NUMBER OF SIGNS
E	C19 <CA>	48" x 48"	ROAD CLOSED	1 - 6" x 6"	2
	C29 <CA>	36" x 9"	500 FT		
F	C19 <CA>	48" x 48"	ROAD CLOSED	1 - 6" x 6"	2
	C29 <CA>	36" x 9"	1000 FT		
G	R11-2	48" x 30"	ROAD CLOSED	BARRICADE MOUNTED	4

NOTES:

1. EXACT SIGN LOCATION TO BE DETERMINED BY THE ENGINEER.
2. ALL SIGN CODES SHOWN ARE FEDERAL SIGN CODES UNLESS OTHERWISE DESIGNATED AS A CALIFORNIA SIGN CODE.
3. <CA> = CALIFORNIA SIGN CODE.
4. FOR ADDITIONAL CONSTRUCTION AREA SIGNS, SEE CONSTRUCTION AREA SIGNS SHEET CS-1.

MOTORIST INFORMATION PLAN

NO SCALE

MI-1

REVISED BY	DATE REVISED

CALCULATED-DESIGNED BY: KRIS ALBERS
CHECKED BY: CHUCK COOK
FUNCTIONAL SUPERVISOR: NARYAN SELWAL

STATE OF CALIFORNIA - DEPARTMENT OF TRANSPORTATION
TRAFFIC

LAST REVISION 02-20-15
DATE PLOTTED => 18-MAR-2015
TIME PLOTTED => 15:09

Dist	COUNTY	ROUTE	POST MILES TOTAL PROJECT	SHEET No.	TOTAL SHEETS
03	ED	89	13.8/18.00	109	164

Kris M. Albers 6-9-14
REGISTERED CIVIL ENGINEER DATE

6-16-14
PLANS APPROVAL DATE

REGISTERED PROFESSIONAL ENGINEER
KRIS M. ALBERS
No. 49986
Exp. 6-30-15
CIVIL
STATE OF CALIFORNIA

THE STATE OF CALIFORNIA OR ITS OFFICERS OR AGENTS SHALL NOT BE RESPONSIBLE FOR THE ACCURACY OR COMPLETENESS OF SCANNED COPIES OF THIS PLAN SHEET.

LEGEND

- LIMIT OF STRIPING PATTERN
- CHANGE IN STRIPING PATTERN
- (No.) PAVEMENT DELINEATION DETAIL NUMBER
- (No./R) PAVEMENT DELINEATION DETAIL NUMBER RECESSED TRAFFIC STRIPE
- (LL/R) LIMIT LINE (RECESSED)
- DELINEATOR (CLASS 2)
- s= DELINEATOR SPACING
- OBJECT MARKER (TYPE L-1)
- TYPE III ARROW
- S "STOP" PAVEMENT MARKING
- (Sht-No.) ROADSIDE SIGN NUMBER
- <CA> CALIFORNIA SIGN CODE
- SIGN - SINGLE POST
- SIGN - TWO POST
- ▲ RESET ROADSIDE SIGN
- ■ REMOVE ROADSIDE SIGN

NOTES:

1. ALL LANE WIDTHS SHALL BE STRIPED AS SHOWN ON TYPICAL SECTIONS.
2. ALL DELINEATORS (CLASS 2) SHALL BE TYPE E UNLESS OTHERWISE SHOWN.
3. ALL DELINEATORS (CLASS 2) SHALL BE INSTALLED ON 525' CENTERS UNLESS OTHERWISE SHOWN.
4. ALL EXISTING SIGNS NOT SHOWN FOR RESETTING OR REMOVAL SHALL REMAIN IN PLACE.
5. ALL SIGN CODES SHOWN ARE FEDERAL SIGN CODES UNLESS OTHERWISE DESIGNATED AS CALIFORNIA SIGN CODES.

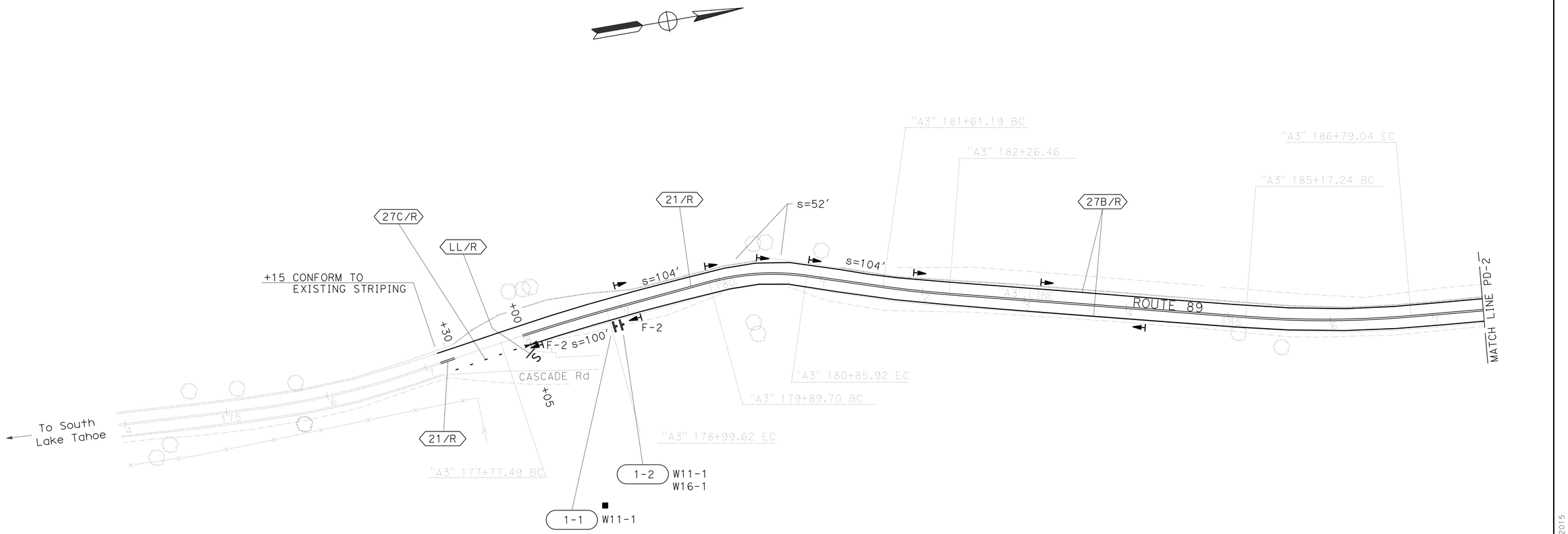

PAVEMENT DELINEATION AND SIGN PLAN

SCALE: 1"=50'

PD-1

APPROVED FOR PAVEMENT DELINEATION AND SIGN WORK ONLY

CHUCK COOK — CALCULATED-DESIGNED BY
KRIS ALBERS — CHECKED BY
SERGIO ACEVES — FUNCTIONAL SUPERVISOR
STATE OF CALIFORNIA - DEPARTMENT OF TRANSPORTATION
TRAFFIC
Caltrans®

REVISED BY | DATE REVISED

LAST REVISION | DATE PLOTTED => 18-MAR-2015
03-20-13 | TIME PLOTTED => 15:09

BORDER LAST REVISED 7/2/2010

USERNAME => s130875
DGN FILE => 0300000224na001.dgn

RELATIVE BORDER SCALE IS IN INCHES 0 1 2 3

UNIT 0390

PROJECT NUMBER & PHASE 03000002241

Dist	COUNTY	ROUTE	POST MILES TOTAL PROJECT	SHEET No.	TOTAL SHEETS
03	ED	89	13.8/18.00	110	164

Kris M. Albers 6-9-14
REGISTERED CIVIL ENGINEER DATE

6-16-14
PLANS APPROVAL DATE

REGISTERED PROFESSIONAL ENGINEER
KRIS M. ALBERS
No. 49986
Exp. 6-30-15
CIVIL
STATE OF CALIFORNIA

THE STATE OF CALIFORNIA OR ITS OFFICERS OR AGENTS SHALL NOT BE RESPONSIBLE FOR THE ACCURACY OR COMPLETENESS OF SCANNED COPIES OF THIS PLAN SHEET.

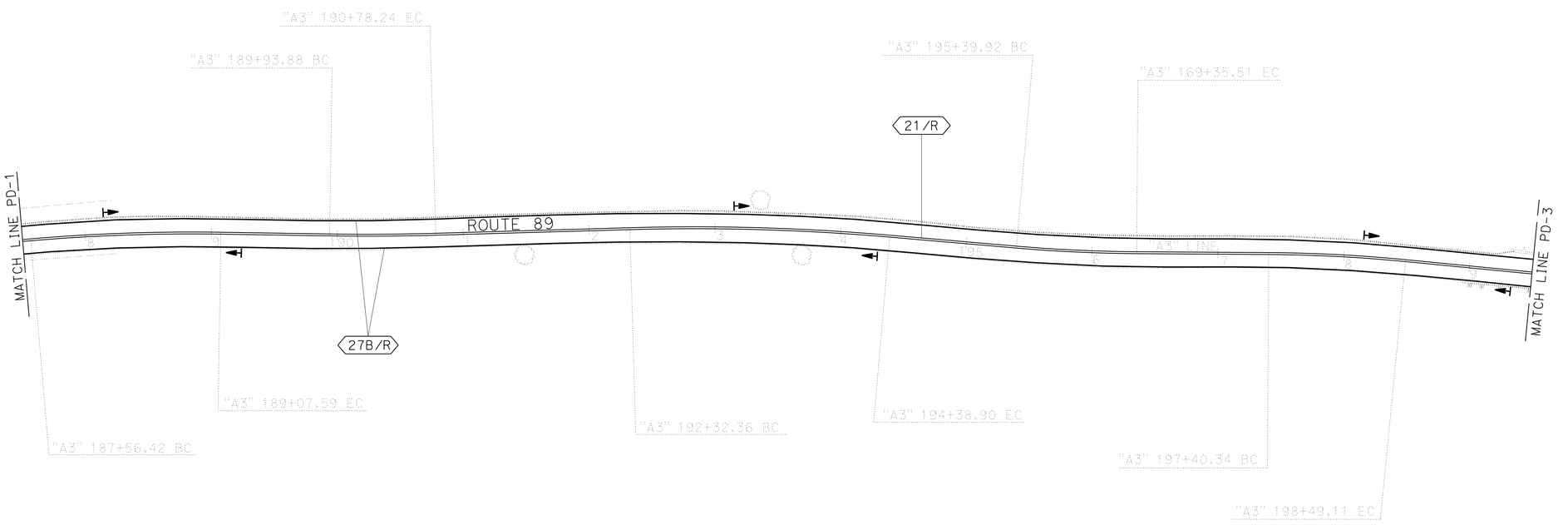

PAVEMENT DELINEATION AND SIGN PLAN

SCALE: 1"=50'

PD-2

APPROVED FOR PAVEMENT DELINEATION AND SIGN WORK ONLY

STATE OF CALIFORNIA - DEPARTMENT OF TRANSPORTATION
Caltrans®
TRAFFIC

FUNCTIONAL SUPERVISOR: SERGIO ACEVES
CALCULATED-DESIGNED BY: CHUCK COOK
CHECKED BY: KRIS ALBERS

REVISED BY	DATE REVISED

LAST REVISION DATE PLOTTED => 18-MAR-2015
03-20-13 TIME PLOTTED => 15:09

BORDER LAST REVISED 7/2/2010

USERNAME => s130875
DGN FILE => 0300000224na002.dgn

RELATIVE BORDER SCALE IS IN INCHES 0 1 2 3

UNIT 0390

PROJECT NUMBER & PHASE 03000002241

Dist	COUNTY	ROUTE	POST MILES TOTAL PROJECT	SHEET No.	TOTAL SHEETS
03	ED	89	13.8/18.00	111	164

Kris M. Albers 6-9-14
REGISTERED CIVIL ENGINEER DATE

6-16-14
PLANS APPROVAL DATE

REGISTERED PROFESSIONAL ENGINEER
KRIS M. ALBERS
No. 49986
Exp. 6-30-15
CIVIL
STATE OF CALIFORNIA

THE STATE OF CALIFORNIA OR ITS OFFICERS OR AGENTS SHALL NOT BE RESPONSIBLE FOR THE ACCURACY OR COMPLETENESS OF SCANNED COPIES OF THIS PLAN SHEET.

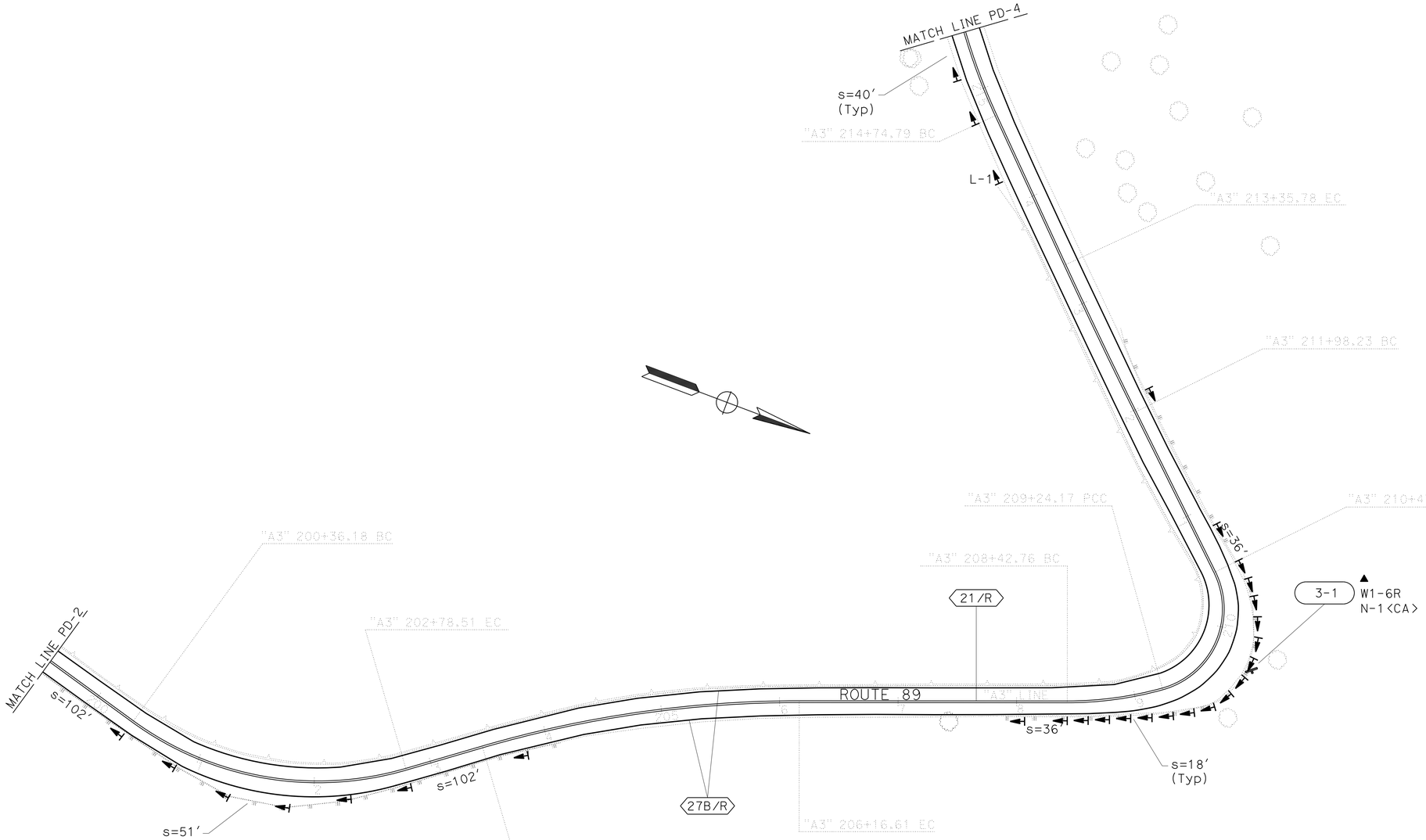

PAVEMENT DELINEATION AND SIGN PLAN

SCALE: 1"=50'

PD-3

APPROVED FOR PAVEMENT DELINEATION AND SIGN WORK ONLY

CALCULATED-DESIGNED BY
CHECKED BY
CHUCK COOK
KRIS ALBERS
REVISED BY
DATE REVISED
FUNCTIONAL SUPERVISOR
SERGIO ACEVES
STATE OF CALIFORNIA - DEPARTMENT OF TRANSPORTATION
Caltrans®
TRAFFIC

LAST REVISION | DATE PLOTTED => 18-MAR-2015
03-20-13 | TIME PLOTTED => 15:09

BORDER LAST REVISED 7/2/2010

USERNAME => s130875
DGN FILE => 0300000224na003.dgn

RELATIVE BORDER SCALE IS IN INCHES 0 1 2 3

UNIT 0390

PROJECT NUMBER & PHASE 03000002241

Dist	COUNTY	ROUTE	POST MILES TOTAL PROJECT	SHEET No.	TOTAL SHEETS
03	ED	89	13.8/18.00	112	164

Kris M. Albers 6-9-14
REGISTERED CIVIL ENGINEER DATE

6-16-14
PLANS APPROVAL DATE

REGISTERED PROFESSIONAL ENGINEER
KRIS M. ALBERS
No. 49986
Exp. 6-30-15
CIVIL
STATE OF CALIFORNIA

THE STATE OF CALIFORNIA OR ITS OFFICERS OR AGENTS SHALL NOT BE RESPONSIBLE FOR THE ACCURACY OR COMPLETENESS OF SCANNED COPIES OF THIS PLAN SHEET.

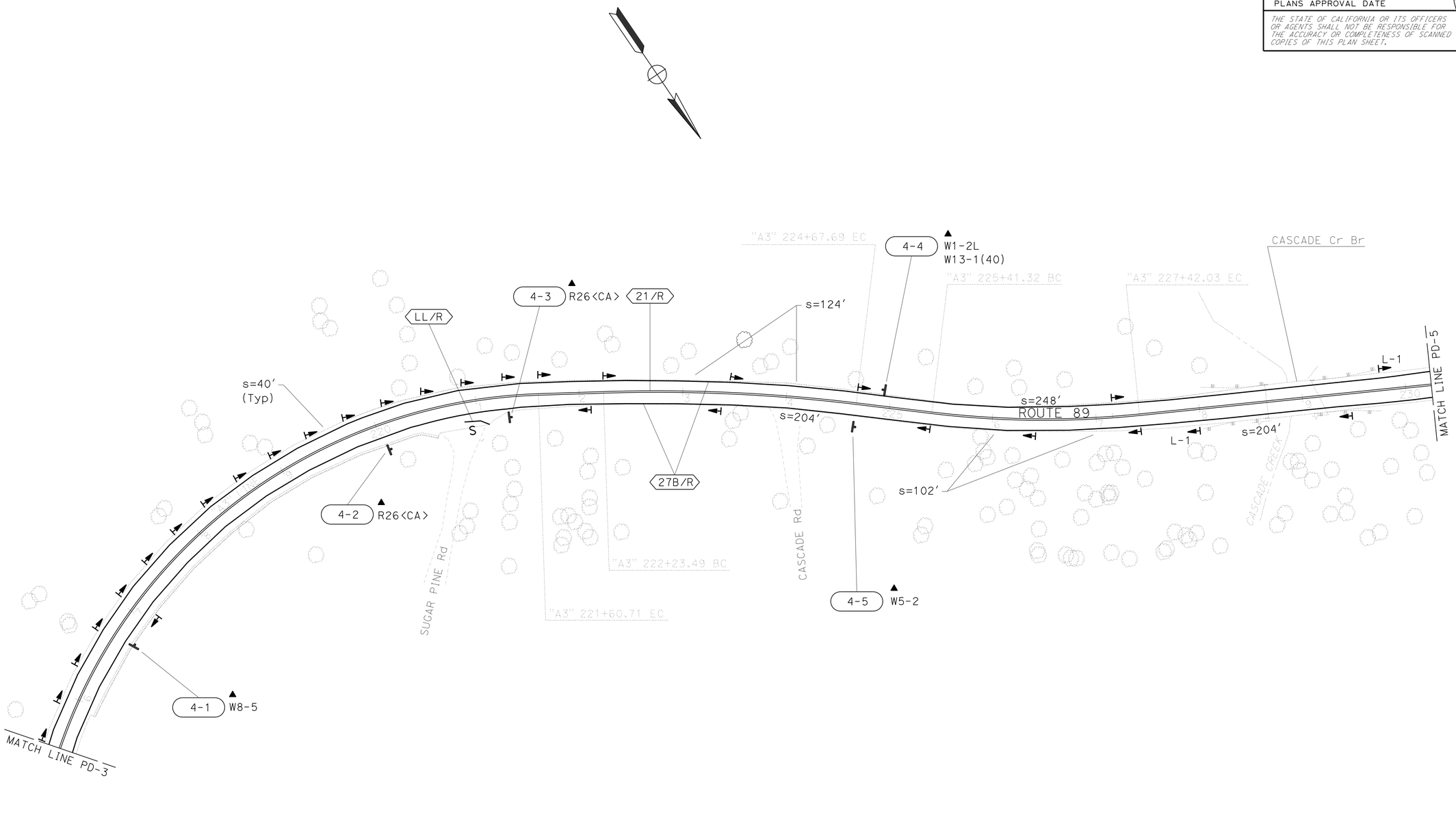

PAVEMENT DELINEATION AND SIGN PLAN

SCALE: 1"=50'

PD-4

APPROVED FOR PAVEMENT DELINEATION AND SIGN WORK ONLY

CHUCK COOK — CALCULATED-DESIGNED BY
KRIS ALBERS — CHECKED BY
REVISED BY — DATE REVISED
SERGIO ACEVES — FUNCTIONAL SUPERVISOR
STATE OF CALIFORNIA - DEPARTMENT OF TRANSPORTATION
Caltrans®
TRAFFIC

LAST REVISION: DATE PLOTTED => 18-MAR-2015; TIME PLOTTED => 15:10
04-07-14

BORDER LAST REVISED 7/2/2010
USERNAME => s130875
DGN FILE => 0300000224na004.dgn
RELATIVE BORDER SCALE IS IN INCHES 0 1 2 3
UNIT 0390
PROJECT NUMBER & PHASE 03000002241

Dist	COUNTY	ROUTE	POST MILES TOTAL PROJECT	SHEET No.	TOTAL SHEETS
03	ED	89	13.8/18.00	113	164

Kris M. Albers 6-9-14
REGISTERED CIVIL ENGINEER DATE

6-16-14
PLANS APPROVAL DATE

REGISTERED PROFESSIONAL ENGINEER
KRIS M. ALBERS
No. 49986
Exp. 6-30-15
CIVIL
STATE OF CALIFORNIA

THE STATE OF CALIFORNIA OR ITS OFFICERS OR AGENTS SHALL NOT BE RESPONSIBLE FOR THE ACCURACY OR COMPLETENESS OF SCANNED COPIES OF THIS PLAN SHEET.

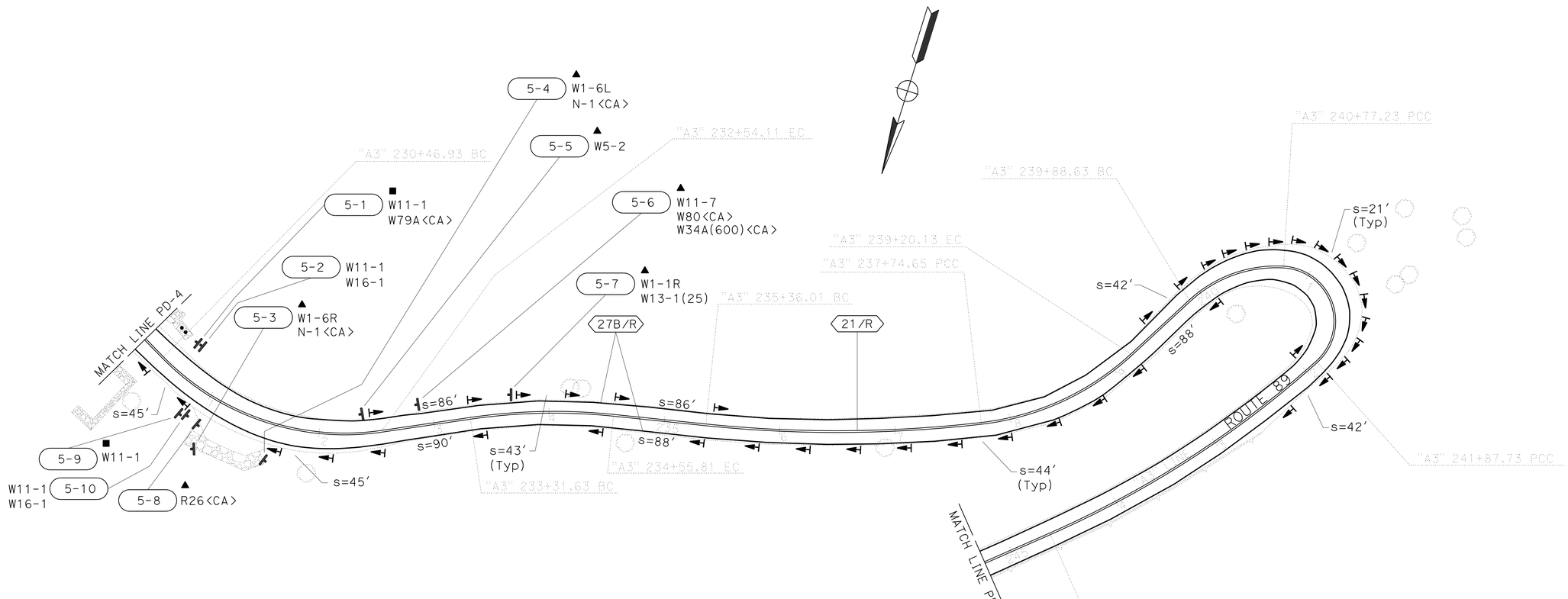

PAVEMENT DELINEATION AND SIGN PLAN

SCALE: 1"=50′

PD-5

APPROVED FOR PAVEMENT DELINEATION AND SIGN WORK ONLY

CALCULATED-DESIGNED BY: CHUCK COOK
CHECKED BY: KRIS ALBERS
REVISED BY
DATE REVISED
FUNCTIONAL SUPERVISOR: SERGIO ACEVES
STATE OF CALIFORNIA - DEPARTMENT OF TRANSPORTATION
TRAFFIC

LAST REVISION | DATE PLOTTED => 18-MAR-2015
04-07-14 | TIME PLOTTED => 15:10

BORDER LAST REVISED 7/2/2010
USERNAME => s130875
DGN FILE => 0300000224na005.dgn
RELATIVE BORDER SCALE IS IN INCHES 0 1 2 3
UNIT 0390
PROJECT NUMBER & PHASE 03000002241

Dist	COUNTY	ROUTE	POST MILES TOTAL PROJECT	SHEET No.	TOTAL SHEETS
03	ED	89	13.8/18.00	114	164

Kris M. Albers 6-9-14
REGISTERED CIVIL ENGINEER DATE

6-16-14
PLANS APPROVAL DATE

REGISTERED PROFESSIONAL ENGINEER
KRIS M. ALBERS
No. 49986
Exp. 6-30-15
CIVIL
STATE OF CALIFORNIA

THE STATE OF CALIFORNIA OR ITS OFFICERS OR AGENTS SHALL NOT BE RESPONSIBLE FOR THE ACCURACY OR COMPLETENESS OF SCANNED COPIES OF THIS PLAN SHEET.

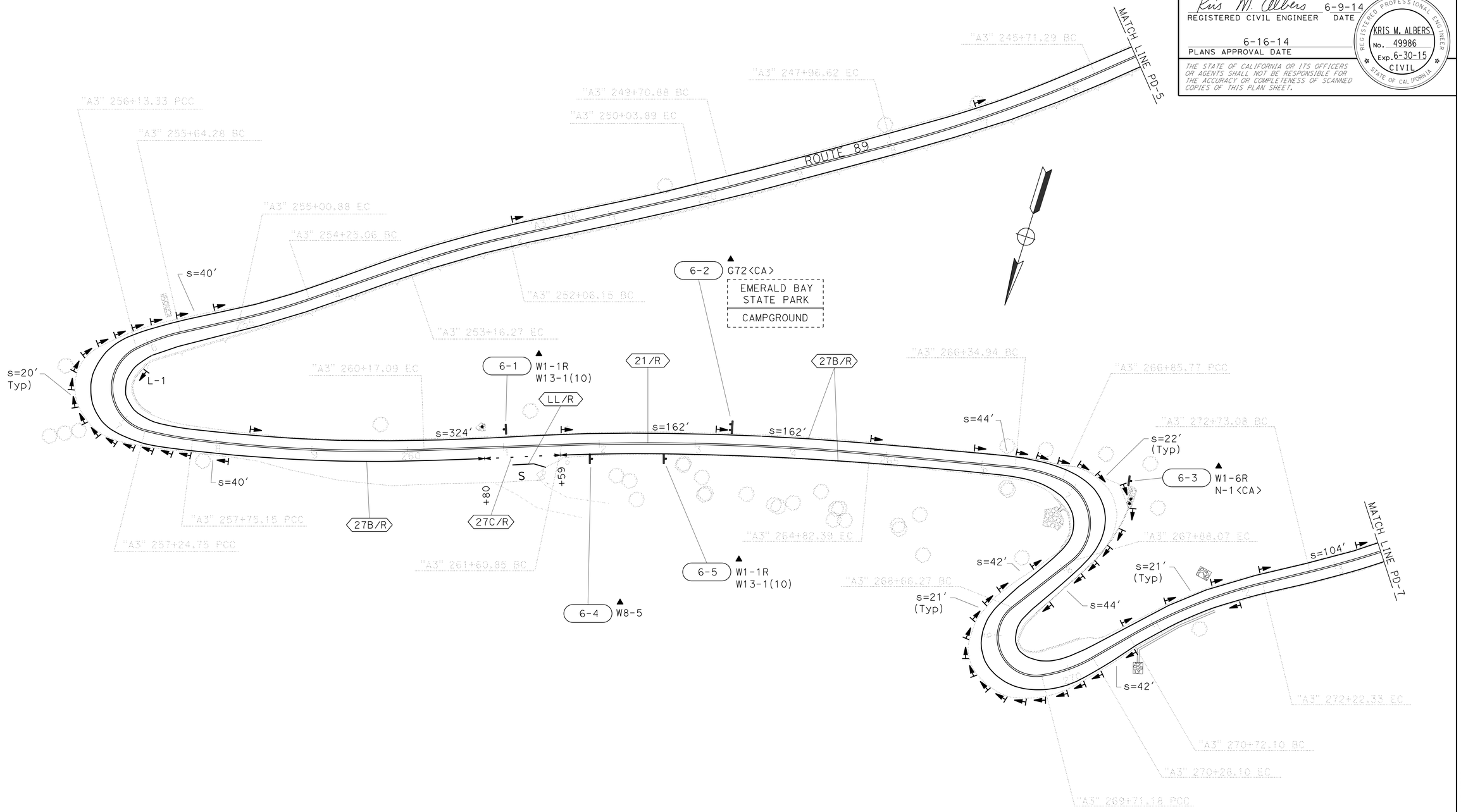

PAVEMENT DELINEATION AND SIGN PLAN

SCALE: 1"=50′

PD-6

APPROVED FOR PAVEMENT DELINEATION AND SIGN WORK ONLY

STATE OF CALIFORNIA - DEPARTMENT OF TRANSPORTATION
Caltrans®
TRAFFIC

FUNCTIONAL SUPERVISOR: SERGIO ACEVES

CALCULATED-DESIGNED BY: KRIS ALBERS
CHECKED BY: CHUCK COOK

REVISED BY | DATE REVISED

LAST REVISION | DATE PLOTTED => 18-MAR-2015
03-20-14 | TIME PLOTTED => 15:10

BORDER LAST REVISED 7/2/2010

USERNAME => s130875
DGN FILE => 0300000224na006.dgn

RELATIVE BORDER SCALE IS IN INCHES 0 1 2 3

UNIT 0390

PROJECT NUMBER & PHASE 03000002241

Dist	COUNTY	ROUTE	POST MILES TOTAL PROJECT	SHEET No.	TOTAL SHEETS
03	ED	89	13.8/18.00	115	164

Kris M. Albers 6-9-14
REGISTERED CIVIL ENGINEER DATE

6-16-14
PLANS APPROVAL DATE

REGISTERED PROFESSIONAL ENGINEER
KRIS M. ALBERS
No. 49986
Exp. 6-30-15
CIVIL
STATE OF CALIFORNIA

THE STATE OF CALIFORNIA OR ITS OFFICERS OR AGENTS SHALL NOT BE RESPONSIBLE FOR THE ACCURACY OR COMPLETENESS OF SCANNED COPIES OF THIS PLAN SHEET.

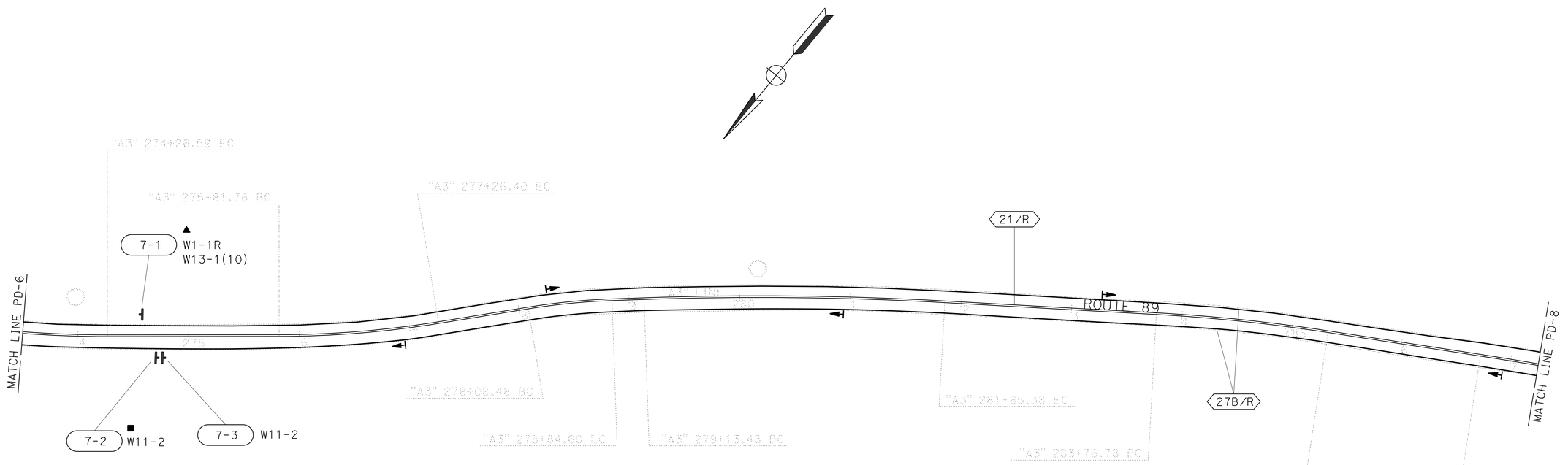

PAVEMENT DELINEATION AND SIGN PLAN

SCALE: 1"=50'

PD-7

APPROVED FOR PAVEMENT DELINEATION AND SIGN WORK ONLY

CALCULATED-DESIGNED BY: CHUCK COOK
CHECKED BY: KRIS ALBERS
REVISED BY
DATE REVISED
FUNCTIONAL SUPERVISOR: SERGIO ACEVES
STATE OF CALIFORNIA - DEPARTMENT OF TRANSPORTATION
TRAFFIC

LAST REVISION
DATE PLOTTED => 18-MAR-2015
TIME PLOTTED => 15:10
03-20-14

BORDER LAST REVISED 7/2/2010
USERNAME => s130875
DGN FILE => 0300000224na007.dgn
RELATIVE BORDER SCALE IS IN INCHES 0 1 2 3
UNIT 0390
PROJECT NUMBER & PHASE 03000002241

Dist	COUNTY	ROUTE	POST MILES TOTAL PROJECT	SHEET No.	TOTAL SHEETS
03	ED	89	13.8/18.00	116	164

Kris M. Albers 6-9-14
REGISTERED CIVIL ENGINEER DATE

6-16-14
PLANS APPROVAL DATE

REGISTERED PROFESSIONAL ENGINEER
KRIS M. ALBERS
No. 49986
Exp. 6-30-15
CIVIL
STATE OF CALIFORNIA

THE STATE OF CALIFORNIA OR ITS OFFICERS OR AGENTS SHALL NOT BE RESPONSIBLE FOR THE ACCURACY OR COMPLETENESS OF SCANNED COPIES OF THIS PLAN SHEET.

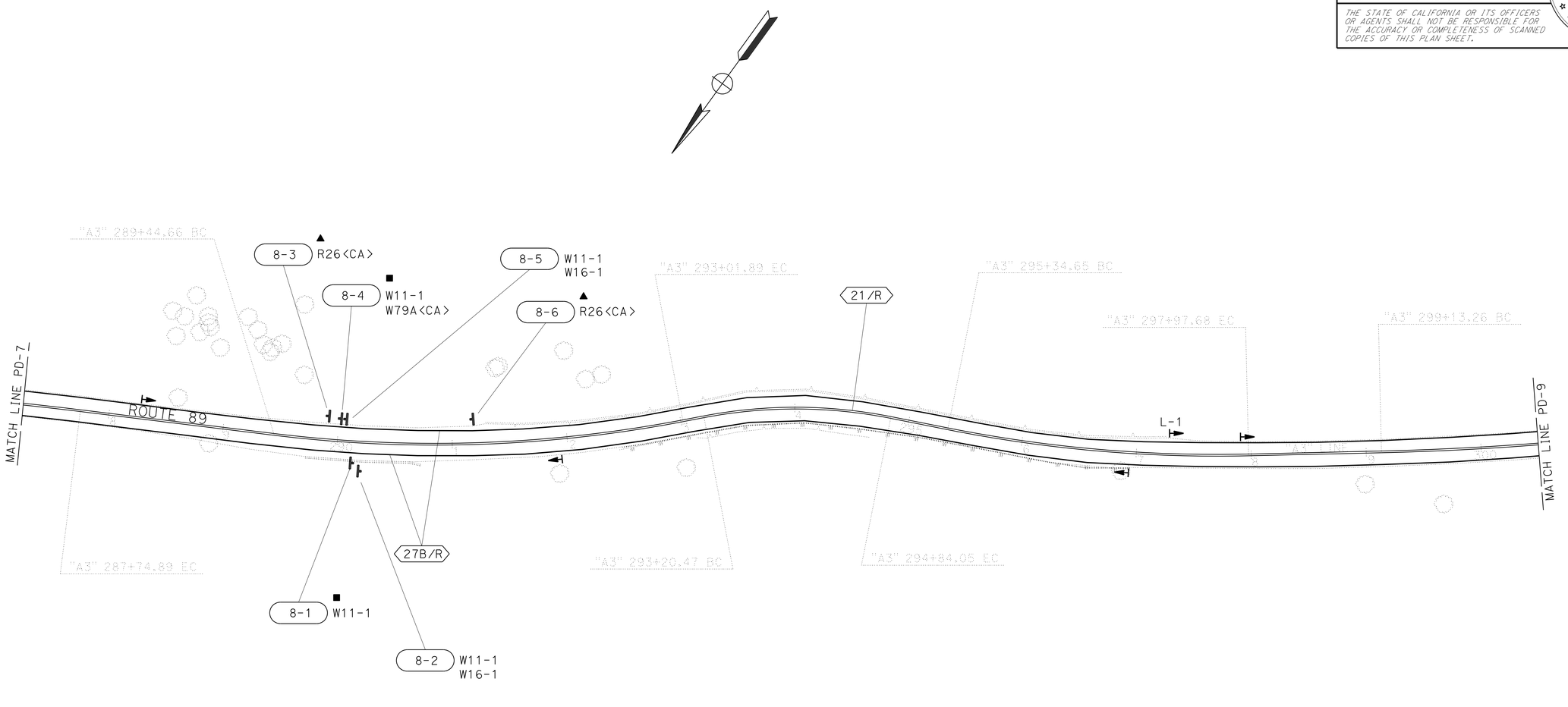

PAVEMENT DELINEATION AND SIGN PLAN

SCALE: 1"=50'

PD-8

APPROVED FOR PAVEMENT DELINEATION AND SIGN WORK ONLY

CALCULATED-DESIGNED BY: CHUCK COOK
CHECKED BY: KRIS ALBERS
REVISED BY
DATE REVISED
FUNCTIONAL SUPERVISOR: SERGIO ACEVES
STATE OF CALIFORNIA - DEPARTMENT OF TRANSPORTATION
Caltrans®
TRAFFIC

LAST REVISION | DATE PLOTTED => 18-MAR-2015
03-20-14 | TIME PLOTTED => 15:10

BORDER LAST REVISED 7/2/2010
USERNAME => s130875
DGN FILE => 0300000224na008.dgn
RELATIVE BORDER SCALE IS IN INCHES 0 1 2 3
UNIT 0390
PROJECT NUMBER & PHASE 03000002241

Dist	COUNTY	ROUTE	POST MILES TOTAL PROJECT	SHEET No.	TOTAL SHEETS
03	ED	89	13.8/18.00	117	164

Kris M. Albers 6-9-14
REGISTERED CIVIL ENGINEER DATE

6-16-14
PLANS APPROVAL DATE

REGISTERED PROFESSIONAL ENGINEER
KRIS M. ALBERS
No. 49986
Exp. 6-30-15
CIVIL
STATE OF CALIFORNIA

THE STATE OF CALIFORNIA OR ITS OFFICERS OR AGENTS SHALL NOT BE RESPONSIBLE FOR THE ACCURACY OR COMPLETENESS OF SCANNED COPIES OF THIS PLAN SHEET.

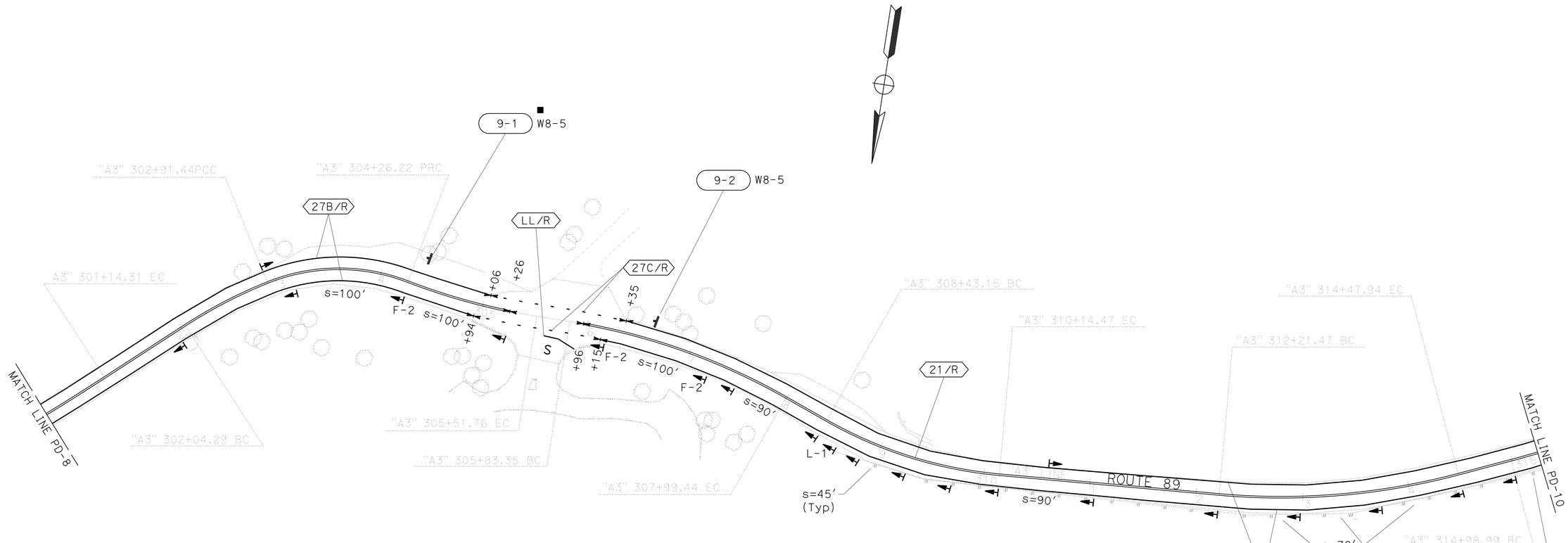

PAVEMENT DELINEATION AND SIGN PLAN

SCALE: 1"=50′

PD-9

APPROVED FOR PAVEMENT DELINEATION AND SIGN WORK ONLY

STATE OF CALIFORNIA - DEPARTMENT OF TRANSPORTATION
Caltrans®
TRAFFIC

FUNCTIONAL SUPERVISOR: SERGIO ACEVES
CALCULATED-DESIGNED BY: CHUCK COOK
CHECKED BY: KRIS ALBERS
REVISED BY
DATE REVISED

LAST REVISION
DATE PLOTTED => 18-MAR-2015
TIME PLOTTED => 15:10
03-20-14

BORDER LAST REVISED 7/2/2010

USERNAME => s130875
DGN FILE => 0300000224na009.dgn

RELATIVE BORDER SCALE IS IN INCHES 0 1 2 3

UNIT 0390

PROJECT NUMBER & PHASE 03000002241

Dist	COUNTY	ROUTE	POST MILES TOTAL PROJECT	SHEET No.	TOTAL SHEETS
03	ED	89	13.8/18.00	118	164

Kris M. Albers 6-9-14
REGISTERED CIVIL ENGINEER DATE

6-16-14
PLANS APPROVAL DATE

REGISTERED PROFESSIONAL ENGINEER
KRIS M. ALBERS
No. 49986
Exp. 6-30-15
CIVIL
STATE OF CALIFORNIA

THE STATE OF CALIFORNIA OR ITS OFFICERS OR AGENTS SHALL NOT BE RESPONSIBLE FOR THE ACCURACY OR COMPLETENESS OF SCANNED COPIES OF THIS PLAN SHEET.

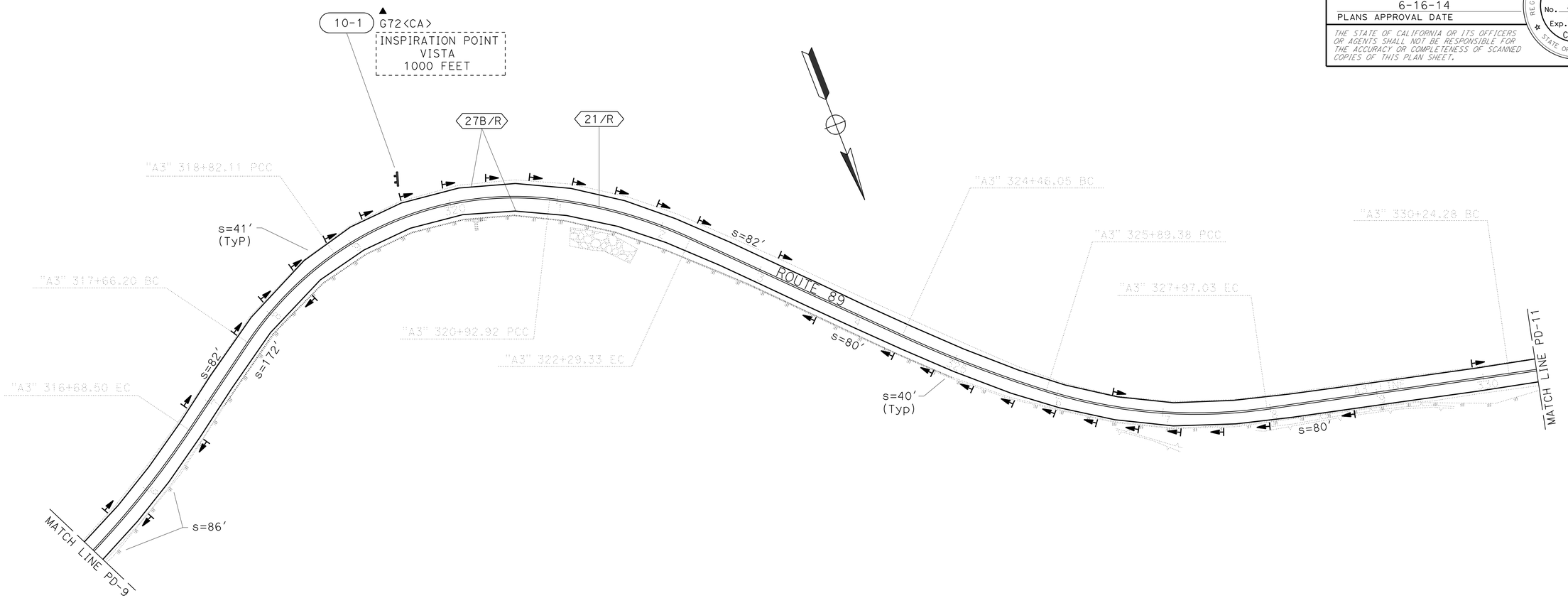

PAVEMENT DELINEATION AND SIGN PLAN

SCALE: 1"=50′

PD-10

APPROVED FOR PAVEMENT DELINEATION AND SIGN WORK ONLY

REVISED BY	
DATE REVISED	
CALCULATED-DESIGNED BY	CHUCK COOK
CHECKED BY	KRIS ALBERS
FUNCTIONAL SUPERVISOR	SERGIO ACEVES

STATE OF CALIFORNIA - DEPARTMENT OF TRANSPORTATION
Caltrans®
TRAFFIC

LAST REVISION 03-20-13
DATE PLOTTED => 18-MAR-2015
TIME PLOTTED => 15:10

Dist	COUNTY	ROUTE	POST MILES TOTAL PROJECT	SHEET No.	TOTAL SHEETS
03	ED	89	13.8/18.00	119	164

Kris M. Albers 6-9-14
REGISTERED CIVIL ENGINEER DATE

6-16-14
PLANS APPROVAL DATE

REGISTERED PROFESSIONAL ENGINEER
KRIS M. ALBERS
No. 49986
Exp. 6-30-15
CIVIL
STATE OF CALIFORNIA

THE STATE OF CALIFORNIA OR ITS OFFICERS OR AGENTS SHALL NOT BE RESPONSIBLE FOR THE ACCURACY OR COMPLETENESS OF SCANNED COPIES OF THIS PLAN SHEET.

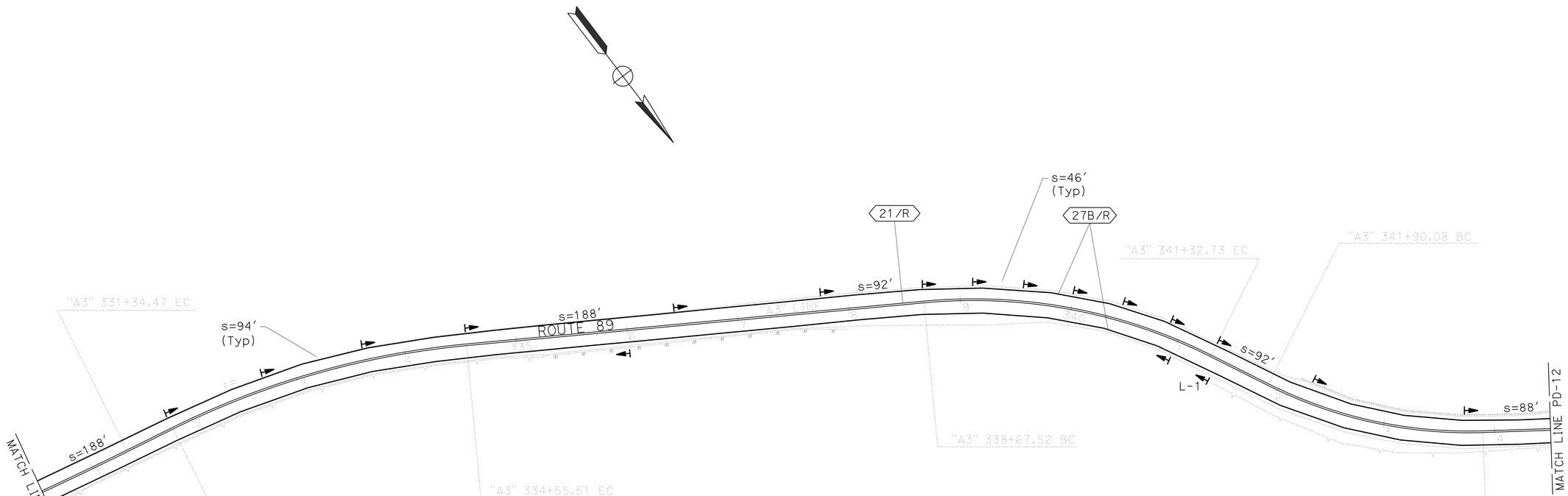

PAVEMENT DELINEATION AND SIGN PLAN

SCALE: 1"=50'

PD-11

APPROVED FOR PAVEMENT DELINEATION AND SIGN WORK ONLY

STATE OF CALIFORNIA - DEPARTMENT OF TRANSPORTATION
TRAFFIC
Caltrans

FUNCTIONAL SUPERVISOR: SERGIO ACEVES
CALCULATED-DESIGNED BY: CHUCK COOK
CHECKED BY: KRIS ALBERS
REVISED BY
DATE REVISED

LAST REVISION
DATE PLOTTED => 18-MAR-2015
TIME PLOTTED => 15:10
03-20-13

BORDER LAST REVISED 7/2/2010
USERNAME => s130875
DGN FILE => 0300000224na011.dgn
RELATIVE BORDER SCALE IS IN INCHES 0 1 2 3
UNIT 0390
PROJECT NUMBER & PHASE 03000002241

Dist	COUNTY	ROUTE	POST MILES TOTAL PROJECT	SHEET No.	TOTAL SHEETS
03	ED	89	13.8/18.00	120	164

Kris M. Albers 6-9-14
REGISTERED CIVIL ENGINEER DATE

6-16-14
PLANS APPROVAL DATE

REGISTERED PROFESSIONAL ENGINEER
KRIS M. ALBERS
No. 49986
Exp. 6-30-15
CIVIL
STATE OF CALIFORNIA

THE STATE OF CALIFORNIA OR ITS OFFICERS OR AGENTS SHALL NOT BE RESPONSIBLE FOR THE ACCURACY OR COMPLETENESS OF SCANNED COPIES OF THIS PLAN SHEET.

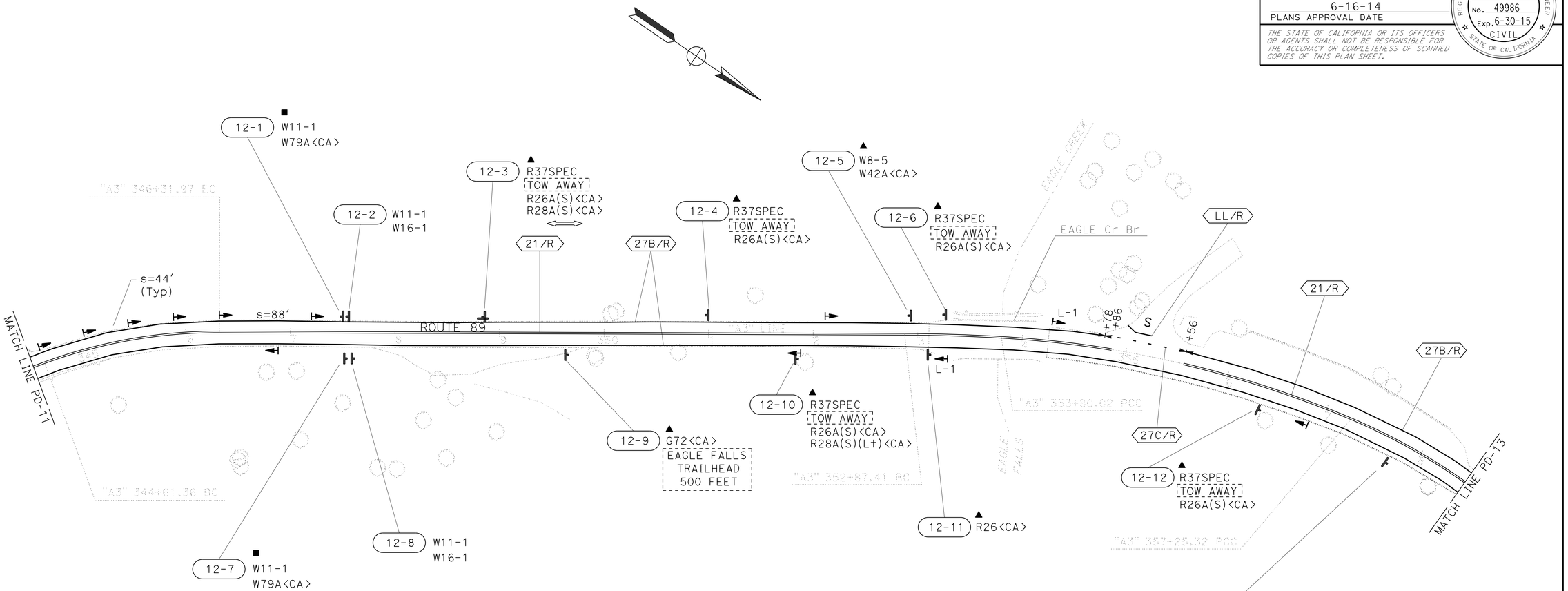

PAVEMENT DELINEATION AND SIGN PLAN

SCALE: 1"=50'

PD-12

APPROVED FOR PAVEMENT DELINEATION AND SIGN WORK ONLY

STATE OF CALIFORNIA - DEPARTMENT OF TRANSPORTATION
Caltrans®
TRAFFIC

FUNCTIONAL SUPERVISOR: SERGIO ACEVES
CALCULATED-DESIGNED BY: KRIS ALBERS
CHECKED BY: CHUCK COOK
REVISED BY
DATE REVISED

LAST REVISION 04-07-14
DATE PLOTTED => 18-MAR-2015
TIME PLOTTED => 15:10

BORDER LAST REVISED 7/2/2010
USERNAME => s130875
DGN FILE => 0300000224na012.dgn
RELATIVE BORDER SCALE IS IN INCHES 0 1 2 3
UNIT 0390
PROJECT NUMBER & PHASE 03000002241

Dist	COUNTY	ROUTE	POST MILES TOTAL PROJECT	SHEET No.	TOTAL SHEETS
03	ED	89	13.8/18.00	121	164

Kris M. Albers 6-9-14
REGISTERED CIVIL ENGINEER DATE

6-16-14
PLANS APPROVAL DATE

REGISTERED PROFESSIONAL ENGINEER
KRIS M. ALBERS
No. 49986
Exp. 6-30-15
CIVIL
STATE OF CALIFORNIA

THE STATE OF CALIFORNIA OR ITS OFFICERS OR AGENTS SHALL NOT BE RESPONSIBLE FOR THE ACCURACY OR COMPLETENESS OF SCANNED COPIES OF THIS PLAN SHEET.

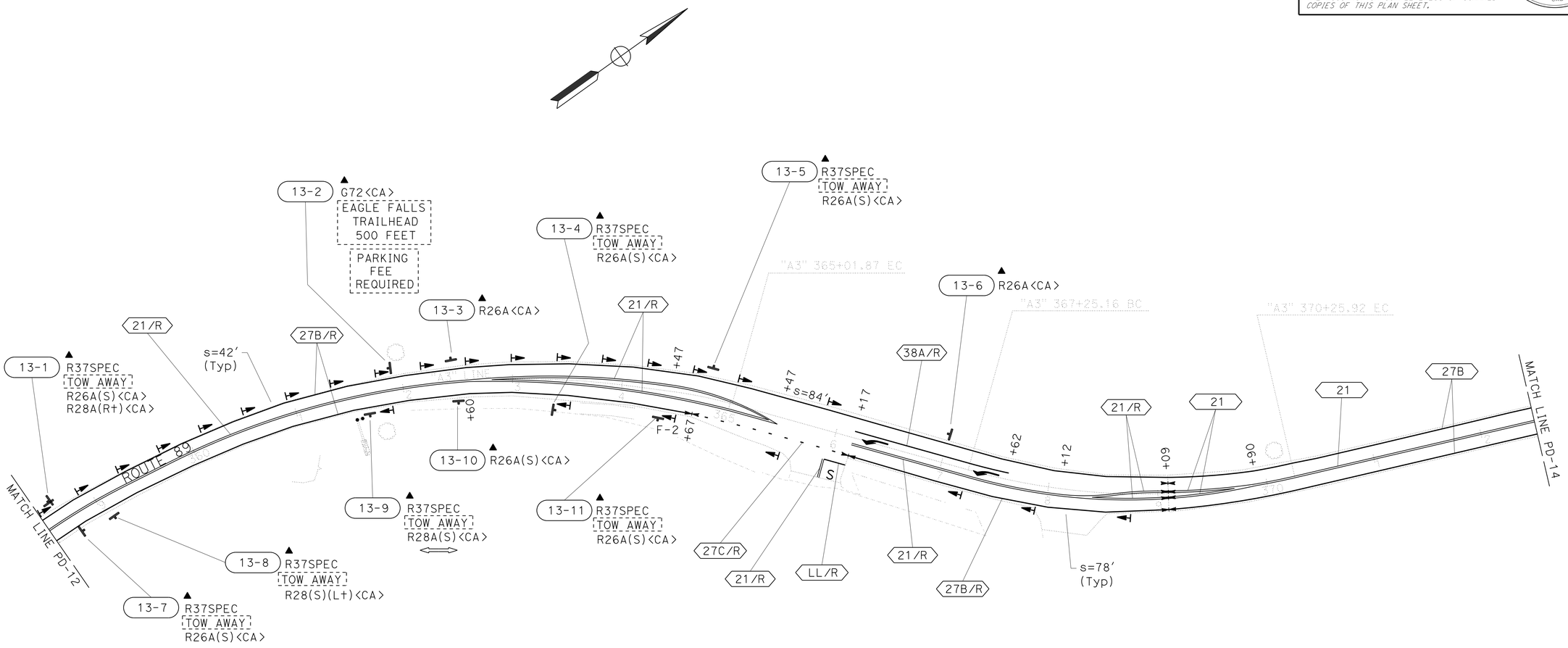

PAVEMENT DELINEATION AND SIGN PLAN

SCALE: 1"=50'

PD-13

APPROVED FOR PAVEMENT DELINEATION AND SIGN WORK ONLY

CHUCK COOK — DESIGNED BY
KRIS ALBERS — CALCULATED-DESIGNED BY
CHECKED BY
REVISED BY
DATE REVISED
FUNCTIONAL SUPERVISOR: SERGIO ACEVES
STATE OF CALIFORNIA - DEPARTMENT OF TRANSPORTATION
TRAFFIC
Caltrans

LAST REVISION 04-02-14
DATE PLOTTED => 18-MAR-2015
TIME PLOTTED => 15:10

BORDER LAST REVISED 7/2/2010
USERNAME => s130875
DGN FILE => 0300000224na013.dgn
RELATIVE BORDER SCALE IS IN INCHES 0 1 2 3
UNIT 0390
PROJECT NUMBER & PHASE 03000002241

Dist	COUNTY	ROUTE	POST MILES TOTAL PROJECT	SHEET No.	TOTAL SHEETS
03	ED	89	13.8/18.00	122	164

Kris M. Albers 6-9-14
REGISTERED CIVIL ENGINEER DATE

6-16-14
PLANS APPROVAL DATE

REGISTERED PROFESSIONAL ENGINEER
KRIS M. ALBERS
No. 49986
Exp. 6-30-15
CIVIL
STATE OF CALIFORNIA

THE STATE OF CALIFORNIA OR ITS OFFICERS OR AGENTS SHALL NOT BE RESPONSIBLE FOR THE ACCURACY OR COMPLETENESS OF SCANNED COPIES OF THIS PLAN SHEET.

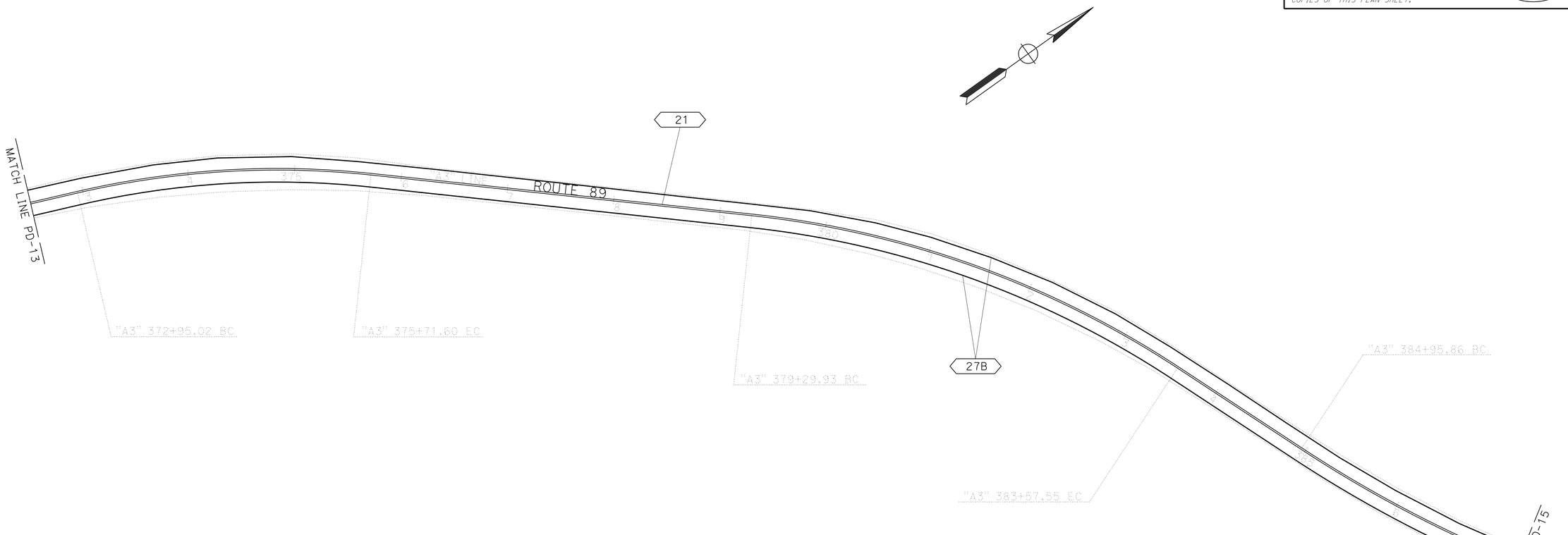

PAVEMENT DELINEATION AND SIGN PLAN

SCALE: 1"=50'

PD-14

APPROVED FOR PAVEMENT DELINEATION AND SIGN WORK ONLY

REVISED BY	
DATE REVISED	
CALCULATED-DESIGNED BY	CHUCK COOK
CHECKED BY	KRIS ALBERS
FUNCTIONAL SUPERVISOR	SERGIO ACEVES

STATE OF CALIFORNIA - DEPARTMENT OF TRANSPORTATION
Caltrans
TRAFFIC

LAST REVISION 02-03-14
DATE PLOTTED => 18-MAR-2015
TIME PLOTTED => 15:10

Dist	COUNTY	ROUTE	POST MILES TOTAL PROJECT	SHEET No.	TOTAL SHEETS
03	ED	89	13.8/18.00	123	164

Kris M. Albers 6-9-14
REGISTERED CIVIL ENGINEER DATE

6-16-14
PLANS APPROVAL DATE

REGISTERED PROFESSIONAL ENGINEER
KRIS M. ALBERS
No. 49986
Exp. 6-30-15
CIVIL
STATE OF CALIFORNIA

THE STATE OF CALIFORNIA OR ITS OFFICERS OR AGENTS SHALL NOT BE RESPONSIBLE FOR THE ACCURACY OR COMPLETENESS OF SCANNED COPIES OF THIS PLAN SHEET.

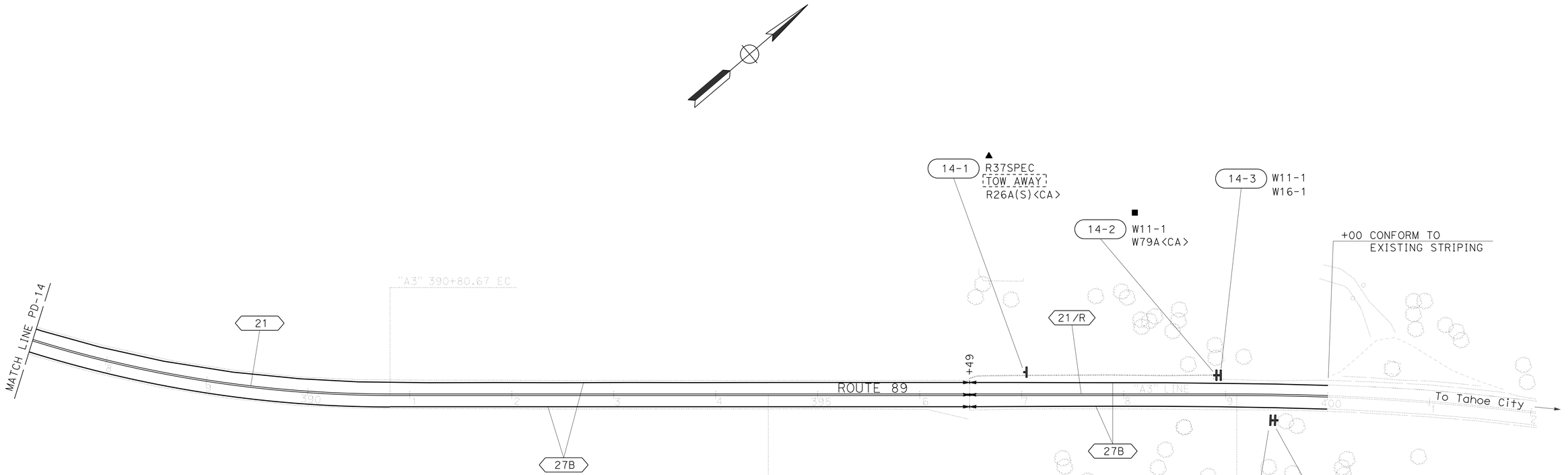

PAVEMENT DELINEATION AND SIGN PLAN

SCALE: 1"=50'

PD-15

APPROVED FOR PAVEMENT DELINEATION AND SIGN WORK ONLY

CALCULATED-DESIGNED BY
CHECKED BY

REVISED BY
DATE REVISED

CHUCK COOK
KRIS ALBERS

FUNCTIONAL SUPERVISOR
SERGIO ACEVES

STATE OF CALIFORNIA - DEPARTMENT OF TRANSPORTATION
Caltrans
TRAFFIC

LAST REVISION | DATE PLOTTED => 18-MAR-2015
03-20-14 | TIME PLOTTED => 15:10

Dist	COUNTY	ROUTE	POST MILES TOTAL PROJECT	SHEET No.	TOTAL SHEETS
03	ED	89	13.8/18.00	124	164

Kris M. Albers 6-9-14
REGISTERED CIVIL ENGINEER DATE

6-16-14
PLANS APPROVAL DATE

REGISTERED PROFESSIONAL ENGINEER
KRIS M. ALBERS
No. 49986
Exp. 6-30-15
CIVIL
STATE OF CALIFORNIA

THE STATE OF CALIFORNIA OR ITS OFFICERS OR AGENTS SHALL NOT BE RESPONSIBLE FOR THE ACCURACY OR COMPLETENESS OF SCANNED COPIES OF THIS PLAN SHEET.

4" TWO-COMPONENT PAINT TRAFFIC STRIPE

DETAIL NUMBER	LF
21	5,642
27B	5,480
TOTAL	11,122

4" THERMOPLASTIC TRAFFIC STRIPE (RECESSED, BROKEN 12-3)

DETAIL NUMBER	LF
27C	642
TOTAL	642

TWO-COMPONENT PAINT PAVEMENT MARKING

DESCRIPTION	NUMBER	SQFT
"STOP"	6	132
TOTAL	———	132

THERMOPLASTIC PAVEMENT MARKING (RECESSED)

DESCRIPTION	NUMBER	SQFT
LIMIT LINE	6	150
TOTAL	———	150

4" THERMOPLASTIC TRAFFIC STRIPE (RECESSED)

DETAIL NUMBER	LF
21	39,280
27B	38,448
TOTAL	77,728

8" THERMOPLASTIC TRAFFIC STRIPE (RECESSED)

DETAIL NUMBER	LF
38A	145
TOTAL	145

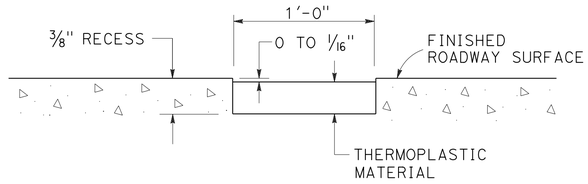

RECESSING DETAIL
(FOR LIMIT LINE)
NO SCALE

DELINEATOR - OBJECT MARKER

SHEET NUMBER	DELINEATOR (CLASS 2)		OBJECT MARKER
	TYPE E	TYPE F	TYPE L-1
	EACH	EACH	EACH
PD-1	7	2	
PD-2	6		
PD-3	28		1
PD-4	28		2
PD-5	41		
PD-6	58		1
PD-7	5		
PD-8	4		1
PD-9	17	3	1
PD-10	33		
PD-11	17		1
PD-12	10		2
PD-13	24	1	
SUBTOTAL	278	6	9
TOTAL	284		9

PAVEMENT DELINEATION DETAILS AND QUANTITIES

PDQ-1

CHUCK COOK — CALCULATED-DESIGNED BY
KRIS ALBERS — CHECKED BY
REVISED BY — DATE REVISED
FUNCTIONAL SUPERVISOR: SERGIO ACEVES
STATE OF CALIFORNIA - DEPARTMENT OF TRANSPORTATION
TRAFFIC
Caltrans

LAST REVISION 04-07-14
DATE PLOTTED => 18-MAR-2015
TIME PLOTTED => 15:10

BORDER LAST REVISED 7/2/2010
USERNAME => s130875
DGN FILE => 0300000224nc001.dgn
RELATIVE BORDER SCALE IS IN INCHES 0 1 2 3
UNIT 0390
PROJECT NUMBER & PHASE 03000002241

Dist	COUNTY	ROUTE	POST MILES TOTAL PROJECT	SHEET No.	TOTAL SHEETS
03	ED	89	13.8/18.00	125	164

Kris M. Albers 6-9-14
REGISTERED CIVIL ENGINEER DATE

6-16-14
PLANS APPROVAL DATE

REGISTERED PROFESSIONAL ENGINEER
KRIS M. ALBERS
No. 49986
Exp. 6-30-15
CIVIL
STATE OF CALIFORNIA

THE STATE OF CALIFORNIA OR ITS OFFICERS OR AGENTS SHALL NOT BE RESPONSIBLE FOR THE ACCURACY OR COMPLETENESS OF SCANNED COPIES OF THIS PLAN SHEET.

NOTES:

1. THE SIGN POST SHALL HAVE 7/16" DIAMETER PERFORATIONS 1" ON CENTER ON ALL FOUR SIDES FOR THE FULL LENGTH.
2. USE TWO DRIVE RIVETS TO FASTEN ASSEMBLED SIGN AND SIGN POST INTO ANCHOR SLEEVE. INSTALL DRIVE RIVETS INTO THE SIDES FACING TRAFFIC.
3. ALL METAL SIGN POSTS AND ANCHOR SLEEVES SHALL BE GALVANIZED.
4. ALL ANCHOR SLEEVES SHALL BE EMBEDDED IN PCC.
5. BALANCED SINGLE POST INSTALLATIONS OF SINGLE SHEET ALUMINUM PANEL SIGNS REQUIRE BACK BRACES WHEN 2'-10" OR MORE IN LENGTH.
6. WOOD BLOCK SPACERS ARE NOT REQUIRED FOR SIGNS MOUNTED ON METAL POSTS.
7. ATTACH RECTANGULAR SIGN PANEL TO SIGN POST WITH BOLTS AT TOP AND BOTTOM. CENTER MAY BE ATTACHED WITH EITHER BOLT OR 3/8" DRIVE RIVET.
8. ATTACH DIAMOND SIGN PANEL TO SIGN POST WITH BOLT AT CENTER. TOP AND BOTTOM MAY BE ATTACHED WITH EITHER BOLTS OR 3/8" DRIVE RIVETS.
9. FOR DETAILS NOT SHOWN, SEE STANDARD PLANS RS1 AND RS2.

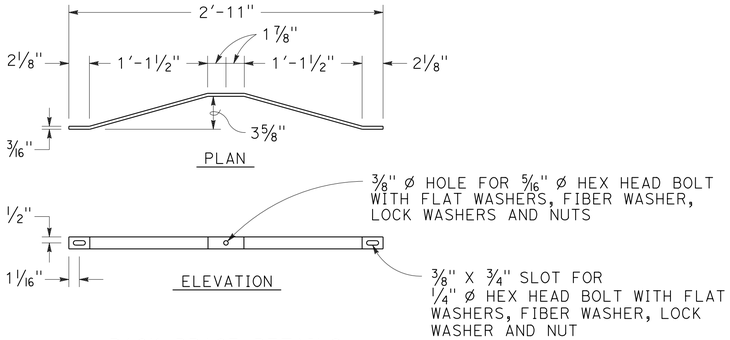

BACK BRACE DETAILS
SEE NOTE 5

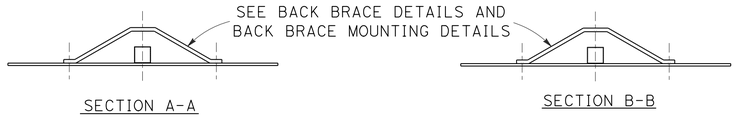

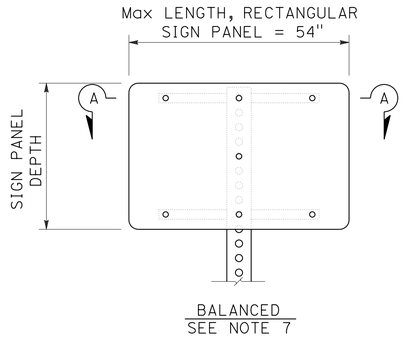

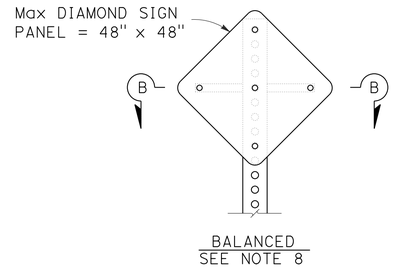

SINGLE POST INSTALLATION

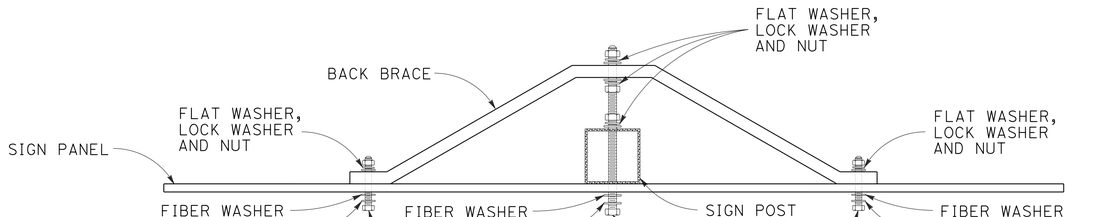

BACK BRACE MOUNTING DETAIL
SEE NOTES 6, 7 AND 8

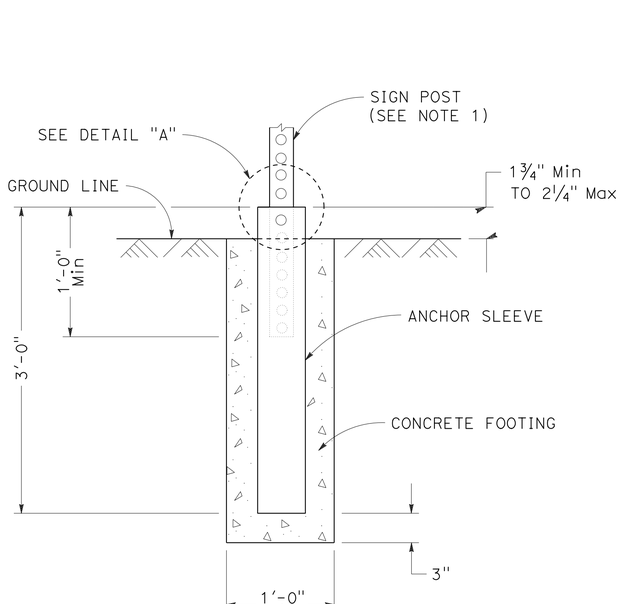

ANCHOR SLEEVE DETAIL

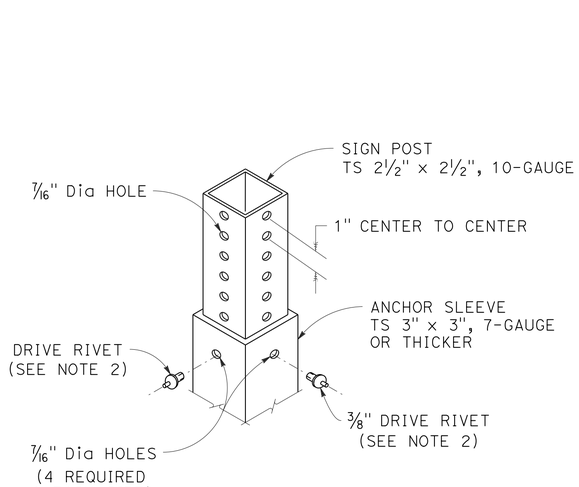

DETAIL "A"

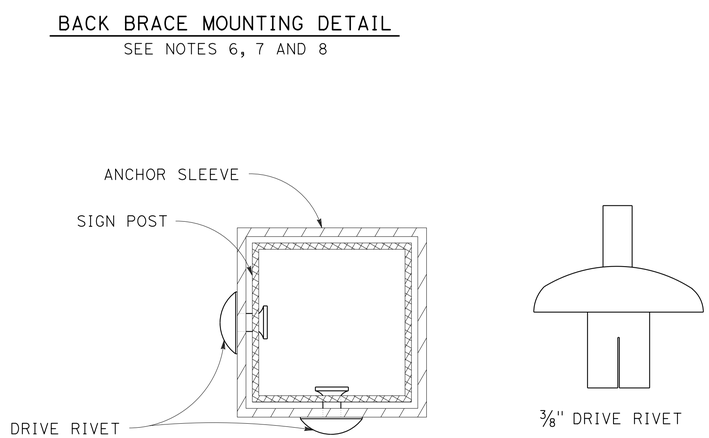

FASTENER DETAILS

SIGN DETAILS

NO SCALE

SD-1

STATE OF CALIFORNIA - DEPARTMENT OF TRANSPORTATION
TRAFFIC
Caltrans
FUNCTIONAL SUPERVISOR: SERGIO ACEVES
CALCULATED-DESIGNED BY: KRIS ALBERS
CHECKED BY: CHUCK COOK
REVISED BY
DATE REVISED

LAST REVISION 11-27-13
DATE PLOTTED => 18-MAR-2015
TIME PLOTTED => 15:10

BORDER LAST REVISED 7/2/2010
USERNAME => s130875
DGN FILE => 0300000224ob001.dgn
RELATIVE BORDER SCALE IS IN INCHES 0 1 2 3
UNIT 0390
PROJECT NUMBER & PHASE 03000002241

Dist	COUNTY	ROUTE	POST MILES TOTAL PROJECT	SHEET No.	TOTAL SHEETS
03	ED	89	13.8/18.00	126	164

Kris M. Albers 6-9-14
REGISTERED CIVIL ENGINEER DATE

6-16-14
PLANS APPROVAL DATE

REGISTERED PROFESSIONAL ENGINEER
KRIS M. ALBERS
No. 49986
Exp. 6-30-15
CIVIL
STATE OF CALIFORNIA

THE STATE OF CALIFORNIA OR ITS OFFICERS OR AGENTS SHALL NOT BE RESPONSIBLE FOR THE ACCURACY OR COMPLETENESS OF SCANNED COPIES OF THIS PLAN SHEET.

ROADSIDE SIGN QUANTITIES

SIGN NUMBER (SHT-NO.)	SIGN CODE		PANEL SIZE	"C" DIM IN FEET	POST SIZE AND LENGTH	ROADSIDE SIGN	RESET ROADSIDE SIGN	REMOVE ROADSIDE SIGN
					METAL POST	ONE POST		
	FEDERAL	CALIFORNIA	INCHES		2½"X2½"	EA	EA	EA
1-1	W11-1							1
1-2	W11-1 W16-1		30 x 30 24 x 30	4	12′	1		
3-1	W1-6R	N-1					1	
4-1	W8-5						1	
4-2		R26					1	
4-3		R26					1	
4-4	W1-2L W13-1(40)						1	
4-5	W5-2						1	
5-1	W11-1	W79A						1
5-2	W11-1 W16-1		30 x 30 24 x 30	4	12′	1		
5-3	W1-6R	N-1					1	
5-4	W1-6L	N-1					1	
5-5	W5-2						1	
5-6	W11-7	W80 W34A(600)					1	
5-7	W1-1R W13-1(25)						1	
5-8		R26					1	
5-9	W11-1							1
5-10	W11-1 W16-1		30 x 30 24 x 30	4	12′	1		
6-1	W1-1R W13-1(10)						1	
6-2		G72					1	
6-3	W1-6R	N-1					1	
6-4	W8-5						1	
6-5	W1-1R W13-1(10)						1	
7-1	W1-1R W13-1(10)						1	
7-2	W11-2							1
7-3	W11-2		30 x 30	5	10′	1		
SHEET TOTAL						4	18	4

NOTES:

1. EXACT LOCATION AND POSITION OF ROADSIDE SIGNS TO BE DETERMINED BY THE ENGINEER.
2. POST LENGTHS GIVEN ARE APPROXIMATE.
3. "C" DIM =VERTICAL CLEARANCE EP TO BOTTOM OF SIGN PANEL.

SIGN QUANTITIES

SQ-1

REVISED BY | DATE REVISED
CHUCK COOK | KRIS ALBERS
CALCULATED-DESIGNED BY | CHECKED BY
FUNCTIONAL SUPERVISOR: SERGIO ACEVES
STATE OF CALIFORNIA - DEPARTMENT OF TRANSPORTATION
TRAFFIC
Caltrans

LAST REVISION | DATE PLOTTED => 18-MAR-2015
04-07-14 | TIME PLOTTED => 15:10

Dist	COUNTY	ROUTE	POST MILES TOTAL PROJECT	SHEET No.	TOTAL SHEETS
03	ED	89	13.8/18.00	127	164

Kris M. Albers 6-9-14
REGISTERED CIVIL ENGINEER DATE

6-16-14
PLANS APPROVAL DATE

REGISTERED PROFESSIONAL ENGINEER
KRIS M. ALBERS
No. 49986
Exp. 6-30-15
CIVIL
STATE OF CALIFORNIA

THE STATE OF CALIFORNIA OR ITS OFFICERS OR AGENTS SHALL NOT BE RESPONSIBLE FOR THE ACCURACY OR COMPLETENESS OF SCANNED COPIES OF THIS PLAN SHEET.

ROADSIDE SIGN QUANTITIES (CONTINUED)

SIGN NUMBER (SHT-NO.)	SIGN CODE		PANEL SIZE	"C" DIM IN FEET	POST SIZE AND LENGTH	ROADSIDE SIGN	RESET ROADSIDE SIGN	REMOVE ROADSIDE SIGN
					METAL POST	ONE POST		
	FEDERAL	CALIFORNIA	INCHES		2½"X2½"	EA	EA	EA
8-1	W11-1							1
8-2	W11-1 W16-1		30 x 30 24 x 30	4	12′	1		
8-3		R26					1	
8-4	W11-1	W79A						1
8-5	W11-1 W16-1		30 x 30 24 x 30	4	12′	1		
8-6		R26					1	
9-1	W8-5							1
9-2	W8-5		30 x 30	5	10′	1		
10-1		G72					1	
12-1	W11-1	W79A						1
12-2	W11-1 W16-1		30 x 30 24 x 30	4	12′	1		
12-3		R37SPEC R26A(S) R28A(S)					1	
12-4		R37SPEC R26A(S)					1	
12-5	W8-5	W42A					1	
12-6		R37SPEC R26A(S)					1	
12-7	W11-1	W79A						1
12-8	W11-1 W16-1		30 x 30 24 x 30	4	12′	1		
12-9		G72					1	
12-10		R37SPEC R26A(S) R28A(S)(L†)					1	
12-11		R26					1	
12-12		R37SPEC R26A(S)					1	
12-13		R37SPEC R26A(S)					1	
13-1		R37SPEC R26A(S) R28A(R†)					1	
13-2		G72					1	
13-3		R26A					1	
13-4		R37SPEC R26A(S)					1	
13-5		R37SPEC R26A(S)					1	
SHEET TOTAL						5	17	5

SIGN QUANTITIES

SQ-2

REVISED BY	DATE REVISED

CALCULATED-DESIGNED BY:
CHECKED BY:

CHUCK COOK
KRIS ALBERS

FUNCTIONAL SUPERVISOR:
SERGIO ACEVES

STATE OF CALIFORNIA - DEPARTMENT OF TRANSPORTATION
Caltrans®
TRAFFIC

LAST REVISION
DATE PLOTTED => 18-MAR-2015
04-07-14 TIME PLOTTED => 15:10

BORDER LAST REVISED 7/2/2010

USERNAME => s130875
DGN FILE => 0300000224od002.dgn

RELATIVE BORDER SCALE IS IN INCHES 0 1 2 3

UNIT 0390

PROJECT NUMBER & PHASE 03000002241

Dist	COUNTY	ROUTE	POST MILES TOTAL PROJECT	SHEET No.	TOTAL SHEETS
03	ED	89	13.8/18.00	128	164

Kris M. Albers 6-9-14
REGISTERED CIVIL ENGINEER DATE

6-16-14
PLANS APPROVAL DATE

REGISTERED PROFESSIONAL ENGINEER
KRIS M. ALBERS
No. 49986
Exp. 6-30-15
CIVIL
STATE OF CALIFORNIA

THE STATE OF CALIFORNIA OR ITS OFFICERS OR AGENTS SHALL NOT BE RESPONSIBLE FOR THE ACCURACY OR COMPLETENESS OF SCANNED COPIES OF THIS PLAN SHEET.

ROADSIDE SIGN QUANTITIES (CONTINUED)

SIGN NUMBER (SHT-NO.)	SIGN CODE		PANEL SIZE	DIM "C" IN FEET	POST SIZE AND LENGTH	ROADSIDE SIGN	RESET ROADSIDE SIGN	REMOVE ROADSIDE SIGN
					METAL POST	ONE POST		
	FEDERAL	CALIFORNIA	INCHES		2½"X2½"	EA	EA	EA
13-6		R26A					1	
13-7		R37SPEC R26A(S)					1	
13-8		R37SPEC R28(S)(L†)					1	
13-9		R37SPEC R28A(S)					1	
13-10		R26A(S)					1	
13-11		R37SPEC R26A(S)					1	
14-1		R37SPEC R26A					1	
14-2	W11-1	W79A						1
14-3	W11-1 W16-1		30 x 30 24 x 30	4	12′	1		
14-4	W11-1	W79A						1
14-5	W11-1 W16-1		30 x 30 24 x 30	4	12′	1		
SHEET TOTAL						2	7	2
SHEET TOTAL FROM SQ-1						4	18	4
SHEET TOTAL FROM SQ-2						5	17	5
TOTAL						11	42	11

ROADSIDE SIGN PANEL QUANTITIES

SIGN CODE	SIGN MESSAGE/DESCRIPTION	PANEL SIZE L x D	PANEL AREA	NUMBER OF PANELS	BACKGROUND		LEGEND		FURNISH SINGLE SHEET ALUMINUM SIGN
					SHEETING COLOR	RETROREFLECTIVE ASTM TYPE	SHEETING COLOR	RETROREFLECTIVE ASTM TYPE	UNFRAMED
									0.063"
FEDERAL		INCHES	SQFT						SQFT
W8-5	SLIPPERY WHEN WET (SYMBOL)	30 x 30	6.25	1	YELLOW	III	BLACK		6.25
W11-1	BICYCLE (SYMBOL)	30 x 30	6.25	9	FYG	III	BLACK		56.25
W11-2	PEDESTRIAN (SYMBOL)	30 x 30	6.25	1	FYG	III	BLACK		6.25
W16-1	SHARE THE ROAD	24 x 30	5.00	9	FYG	III	BLACK		45.00
TOTAL									113.75

FYG=FLOURESCENT YELLOW-GREEN

L = LENGTH OF PANEL
D = DEPTH OF PANEL

SIGN QUANTITIES

SQ-3

CHUCK COOK — CALCULATED-DESIGNED BY
KRIS ALBERS — CHECKED BY
REVISED BY — DATE REVISED
SERGIO ACEVES — FUNCTIONAL SUPERVISOR
STATE OF CALIFORNIA - DEPARTMENT OF TRANSPORTATION
TRAFFIC
Caltrans

LAST REVISION 04-07-14 | DATE PLOTTED => 18-MAR-2015 | TIME PLOTTED => 15:10

BORDER LAST REVISED 7/2/2010 | USERNAME => s130875 | DGN FILE => 0300000224od003.dgn | RELATIVE BORDER SCALE IS IN INCHES 0 1 2 3 | UNIT 0390 | PROJECT NUMBER & PHASE 03000002241

Dist	COUNTY	ROUTE	POST MILES TOTAL PROJECT	SHEET No.	TOTAL SHEETS
03	ED	89	13.8/18.0	129	164

Fermin Barriga 6-9-14
REGISTERED CIVIL ENGINEER DATE

6-16-14
PLANS APPROVAL DATE

FERMIN BARRIGA No. C47047 Exp. 12-31-15 CIVIL — REGISTERED PROFESSIONAL ENGINEER — STATE OF CALIFORNIA

THE STATE OF CALIFORNIA OR ITS OFFICERS OR AGENTS SHALL NOT BE RESPONSIBLE FOR THE ACCURACY OR COMPLETENESS OF SCANNED COPIES OF THIS PLAN SHEET.

ROADWAY QUANTITIES SUMMARY TABLE

SHEET	Lt/Rt	LOCATION/ STATION LIMITS "A3" LINE	HMA (TYPE A)	CLASS 2 AB	ROADWAY EXCAVATION	(N) EMBANKMENT	DESCRIPTION
			TON	CY	CY	CY	
		MAINLINE					
L-1	Lt/Rt	177+15.00 TO 189+50.00	528.85		140.02	6.18	
L-2	Lt/Rt	189+50.00 TO 203+50.00	596.03		143.37	3.44	
L-3	Lt/Rt	203+50.00 TO 221+50.00	912.90	50.00	71.90	0.24	
L-4	Lt/Rt	221+50.00 TO 235+50.00	569.45	46.38	318.47	7.78	
L-5	Lt/Rt	235+50.00 TO 254+50.00	779.72		45.33	4.43	
L-6	Lt/Rt	254+50.00 TO 273+50.00	1,001.80	25.41	130.85	76.33	
L-7	Lt/Rt	273+50.00 TO 287+50.00	490.14		87.52	0.44	
L-8	Lt/Rt	287+50.00 TO 300+50.00	534.37		49.47	6.20	
L-9	Lt/Rt	300+50.00 TO 314+50.00	706.70	148.47	239.55	0.30	
L-10	Lt/Rt	314+50.00 TO 330+50.00	740.93		87.98	1.93	
L-11	Lt/Rt	330+50.00 TO 345+50.00	645.92		67.78	14.17	
L-12	Lt/Rt	345+50.00 TO 358+50.00	704.55		72.81	35.50	
L-13	Lt/Rt	358+50.00 TO 372+50.00	589.70		9.44	1.49	
L-14	Lt/Rt	372+50.00 TO 387+50.00	0.00		0.00	0.00	EAGLE FALLS SIDEHILL VIADUCTS
L-15	Lt/Rt	387+50.00 TO 400+00.00	179.46		26.54	0.01	
		SUBTOTAL	8,980.54	270.26	1,491.03	158.44	
		MAINTENANCE ACCESS DRIVEWAY					
L-4	Rt	AT Sta "A3" 226+64.99		37.33	14.93	64.98	
		SUBTOTAL		37.33	14.93	64.98	
		CONCRETE CURB + 1' SAWCUT	HMA		Exc	Emb	
	Lt/Rt	SEE SHEET Q-3	INCLUDED	386.99	INCLUDED	INCLUDED	
		SUBTOTAL	ABOVE	386.99	ABOVE	ABOVE	
		PLACE HMA (Misc AREA)					
	Lt/Rt	SEE SHEET Q-3	8.13				
		SUBTOTAL	8.13				
		SETTLING BASINS					
	Rt	SEE SHEET DQ-9			527.5		
		SUBTOTAL			527.5		
		TOTAL	8,988.67	694.58	2,033.46	223.42	

(N) - NOT A SEPERATE PAY ITEM, FOR INFORMATION ONLY.
FOR EXACT LIMITS/LOCATION OF ROAD CONNECTIONS, SEE LAYOUTS AND CONSTRUCTION DETAILS SHEETS .

TACK COAT

STATION LIMITS "A3" LINE	(N) AREA	VOLUME	DESCRIPTION
	SQYD	TON	
177+15.00 TO 400+00.00	63,140	18.42	MAINLINE (INCLUDING ROAD CONNECTIONS)
177+15.00 TO 400+00.00	591	0.25	SAWCUT AREAS ADJACENT TO CURBS
177+15.00 TO 400+00.00	600	0.25	NEW MVP AREAS
TOTAL		18.91	

(N) - NOT A SEPERATE PAY ITEM, FOR INFORMATION ONLY.

REPLACE AC SURFACING

STATION LIMITS "A3" LINE	(N) AREA	VOLUME	DESCRIPTION
	SQFT	CY	
177+15.00 TO 400+00.00	56,970	738.5	SB/NB MAINLINE
TOTAL		738.5	

(N) - NOT A SEPERATE PAY ITEM, FOR INFORMATION ONLY.
EXACT LOCATIONS TO BE DETERMINED BY THE ENGINEER.

TREATED WOOD WASTE

	TREATED WOOD WASTE
	LB
REMOVE MBGR	62,972
REMOVE ROADSIDE SIGN	587
TOTAL	63,559

CRACK TREATMENT

SHEET	LOCATION/ STATION LIMITS "A3" LINE (MAINLINE)	(N) LENGTH	
	NB ROUTE 89	LF	LNMI
NB L1-L4	177+15.00 TO 228+30.00	5,115.0	0.97
NB L4-L12	229+53.00 TO 353+10.65	12,357.7	2.34
NB L12-L13	354+25.00 TO 369+09.10	1,484.1	0.28
NB L13-L15	396+49.00 TO 400+00.00	351.0	0.07
	SUBTOTAL		3.66
	SB ROUTE 89		
SB L1-L4	177+15.00 TO 228+30.00	5,115.0	0.97
SB L4-L12	229+53.00 TO 353+10.65	12,357.7	2.34
SB L12-L13	354+25.00 TO 369+09.10	1,484.1	0.28
SB L13-L15	396+49.00 TO 400+00.00	351.0	0.07
	SUBTOTAL	38,615.5	3.66
	TOTAL		7.32

(N) - NOT A SEPARATE PAY ITEM, FOR INFORMATION ONLY.

COLD PLANE AC PAVEMENT

Lt/Rt	Lt/Rt	STATION LIMITS "A3" LINE	AREA
			SQYD
L-1	Lt/Rt	177+15.00 TO 189+50.00	3,554
L-2	Lt/Rt	189+50.00 TO 203+50.00	4,066
L-3	Lt/Rt	203+50.00 TO 221+50.00	6,430
L-4	Lt/Rt	221+50.00 TO 235+50.00	4,039
L-5	Lt/Rt	235+50.00 TO 254+50.00	5,569
L-6	Lt/Rt	254+50.00 TO 273+50.00	7,068
L-7	Lt/Rt	273+50.00 TO 287+50.00	3,501
L-8	Lt/Rt	287+50.00 TO 300+50.00	3,743
L-9	Lt/Rt	300+50.00 TO 314+50.00	5,038
L-10	Lt/Rt	314+50.00 TO 330+50.00	5,211
L-11	Lt/Rt	330+50.00 TO 345+50.00	4,568
L-12	Lt/Rt	345+50.00 TO 358+50.00	4,993
L-13	Lt/Rt	358+50.00 TO 372+50.00	4,212
L-14	Lt/Rt	372+50.00 TO 387+50.00	0
L-15	Lt/Rt	387+50.00 TO 400+00.00	1,235
		TOTAL	63,229

SUMMARY OF QUANTITIES
Q-1

REVISED BY | DATE REVISED
MAHBOOBEH DEILAMI | J. A. HUERTA
CALCULATED-DESIGNED BY | CHECKED BY
FUNCTIONAL SUPERVISOR: CARLOS A. PORTILLO
STATE OF CALIFORNIA - DEPARTMENT OF TRANSPORTATION
NORTH REGION DIVISION OF ENGINEERING
Caltrans

LAST REVISION 06-04-14 | DATE PLOTTED => 18-MAR-2015 | TIME PLOTTED => 15:10

BORDER LAST REVISED 7/2/2010 | USERNAME => s130875 | DGN FILE => 0300000224pa001.dgn | RELATIVE BORDER SCALE IS IN INCHES 0 1 2 3 | UNIT 0305 | PROJECT NUMBER & PHASE 03000002241

Dist	COUNTY	ROUTE	POST MILES TOTAL PROJECT	SHEET No.	TOTAL SHEETS
03	ED	89	13.8/18.0	130	164

Fermin Barriga B. 6-9-14
REGISTERED CIVIL ENGINEER DATE

FERMIN BARRIGA No. C47047 Exp. 12-31-15 CIVIL — REGISTERED PROFESSIONAL ENGINEER — STATE OF CALIFORNIA

6-16-14
PLANS APPROVAL DATE

THE STATE OF CALIFORNIA OR ITS OFFICERS OR AGENTS SHALL NOT BE RESPONSIBLE FOR THE ACCURACY OR COMPLETENESS OF SCANNED COPIES OF THIS PLAN SHEET.

GUARD RAILING

SHEET	STATION LIMITS "A3" LINE	L+/R+	REMOVE GUARDRAIL *	MBGR (7' WOOD POST)	ALTERNATIVE IN-LINE TERMINAL SYSTEM	ALTERNATIVE FLARED TERMINAL SYSTEM	Trans RAILING (TYPE WB-31)	Trans RAILING (TYPE WB)	REMOVE CONCRETE	MINOR CONCRETE *** (MINOR STRUCTURE)	VEGETATION CONTROL (MINOR CONCRETE) **	GUARD RAILING LAYOUT (N)	COMMENTS
			LF	LF	EA	EA	EA	EA	CY	CY	SQYD	TYPE	
L-2,3	198+94.48 TO 204+10.85	R+	462.5	425.0	2							11D	SEE SHEET C-10 FOR GR LAYOUT 11D
L-3	207+90.92 TO 212+67.30	R+	475.0	437.5	1	1						11J	SEE SHEET C-11 FOR GR LAYOUT 11J
L-4	228+01.30 TO 228+63.80	R+	62.5			1	1			0.60		12B	SEE NOTE 3 ON L-4 AND SHEET C-1
L-4	228+03.60 TO 228+66.10	L+	62.5			1	1		0.08	0.11		12BB	SEE NOTE 3 ON L-4 AND SHEET C-1
L-4	229+08.08 TO 229+74.08	L+	62.5			1	1			0.60		12B	SEE NOTE 3 ON L-4 AND SHEET C-1
L-4	229+08.83 TO 229+74.60	R+	62.5			1	1			0.60		12BB	SEE NOTE 3 ON L-4 AND SHEET C-1
L-8	292+43.76 TO 296+94.92	R+	445.5	362.5	1	1						11J	SEE SHEET C-11 FOR GR LAYOUT 11J
L-9/11	308+64.55 TO 330+69.28	R+	2,206.3	2,137.5		1		1			180	12B	SEE NOTE 4 ON SHEET L-11
L-11	335+21.60 TO 337+97.25	R+	275.0	212.5		1		1			130	12BB	SEE NOTE 4 ON SHEET L-11
SUBTOTAL										1.91			
TOTAL			4,113.3	3,575.0	4	8	4	2	0.08		310		

(N) - NOT A SEPARATE PAY ITEM, FOR INFORMATION ONLY.
* - SEE LAYOUT PLANS FOR REMOVE GUARDRAIL LIMITS.
** - SEE LAYOUT PLAN SHEETS L-10 AND L-11 FOR VEGETATION CONTROL (MINOR CONCRETE) LIMITS.
*** - SEE DRAINAGE SUMMARY QUANTITIES SHEET DQ-10 FOR TOTAL QUANTITY.

ROCK SLOPE PROTECTION

SHEET	STATION LIMITS "A3" LINE			RSP (No. 3,* METHOD B)	RSP (FACING,* METHOD B)	RSP FABRIC * (CLASS 8)
	BEGIN	END	L+/R+	CY	CY	SQYD
L-4	231+13.87	231+45.86	R+	17.1		62.4
L-6	270+57.45	270+70.55	R+		4.1	13.8
L-10	321+10.00	321+85.00	R+		92.4	215.8
SUBTOTAL				17.1	96.5	292.0

* - SEE DRAINAGE SUMMARY QUANTITIES SHEET DQ-10 FOR TOTAL QUANTITY.

CONCRETED-RSP (FACING, METHOD A)

SHEET	STATION "A3" LINE	CONCRETED-RSP * (FACING, METHOD A)	RSP FABRIC * (CLASS 8)
		CY	SQYD
L-4	228+59.44, 23.93 L+	20.3	44.8
SUBTOTAL		20.3	44.8

* - SEE DRAINAGE SUMMARY QUANTITIES SHEET DQ-10 FOR TOTAL QUANTITY.
* - SEE CONSTRUCTION DETAILS SHEET C-25 FOR MORE INFORMATION.

STAIN QUANTITY

STATION	LOCATION	ROCK STAIN	CONCRETE STAIN	(N) STEEL STAIN	COMMENTS
		SQFT	SQFT	LF	
"A3" LINE 199+30.00 TO 214+19.60	L+	--	4,468	--	Exist PCC RETAINING WALL
"A3" LINE 199+30.00 TO 211+58.74	L+	8,868	--	--	Exist RSP
"A3" LINE 198+94.48 TO 204+10.85	R+	--	--	516	METAL BEAM GUARD RAILING
"A3" LINE 207+90.92 TO 212+67.30	R+	--	--	480	METAL BEAM GUARD RAILING
"A3" LINE 228+03.60 TO 228+66.10	L+	--	--	63	METAL BEAM GUARD RAILING
"A3" LINE 228+01.30 TO 228+63.80	R+	--	--	63	METAL BEAM GUARD RAILING
"A3" LINE 229+11.58 TO 229+74.08	L+	--	--	63	METAL BEAM GUARD RAILING
"A3" LINE 229+12.33 TO 229+74.60	R+	--	--	63	METAL BEAM GUARD RAILING
"A3" LINE 242+62.30 TO 256+14.50	L+	--	4,057	--	Exist PCC RETAINING WALL
"A3" LINE 291+29.59 TO 297+25.99	L+	--	1,790	--	Exist PCC RETAINING WALL
"A3" LINE 292+43.76 TO 296+94.92	R+	--	--	450	METAL BEAM GUARD RAILING
"A3" LINE 308+64.55 TO 330+63.24	R+	--	--	2,305	METAL BEAM GUARD RAILING
"A3" LINE 335+21.60 TO 337+96.39	R+	--	--	282	METAL BEAM GUARD RAILING
TOTAL		8,868	10,315	4,285	

(N) - NOT A SEPARATE PAY ITEM, FOR INFORMATION ONLY. MBGR AND OTHER GALVANIZED MATERIALS TO BE STAINED SHALL BE PAID UNDER THEIR RESPECTIVE ITEMS OF WORK.

SUMMARY OF QUANTITIES
Q-2

CALCULATED-DESIGNED BY | CHECKED BY
MAHBOOBEH DEILAMI | J. A. HUERTA
FUNCTIONAL SUPERVISOR: CARLOS A. PORTILLO
STATE OF CALIFORNIA - DEPARTMENT OF TRANSPORTATION
NORTH REGION DIVISION OF ENGINEERING
Caltrans
REVISED BY | DATE REVISED

LAST REVISION 05-21-14 | DATE PLOTTED => 18-MAR-2015 | TIME PLOTTED => 15:10

BORDER LAST REVISED 7/2/2010 | USERNAME => s130875 | DGN FILE => 0300000224pa002.dgn | RELATIVE BORDER SCALE IS IN INCHES 0 1 2 3 | UNIT 0305 | PROJECT NUMBER & PHASE 03000002241

Dist	COUNTY	ROUTE	POST MILES TOTAL PROJECT	SHEET No.	TOTAL SHEETS
03	ED	89	13.8/18.0	131	164

Fermin Barriga B. 6-9-14
REGISTERED CIVIL ENGINEER DATE

6-16-14
PLANS APPROVAL DATE

REGISTERED PROFESSIONAL ENGINEER
FERMIN BARRIGA
No. C47047
Exp. 12-31-15
CIVIL
STATE OF CALIFORNIA

THE STATE OF CALIFORNIA OR ITS OFFICERS OR AGENTS SHALL NOT BE RESPONSIBLE FOR THE ACCURACY OR COMPLETENESS OF SCANNED COPIES OF THIS PLAN SHEET.

CONCRETE CURB

SHEET	L†/R†	STATION LIMITS "A3" LINE	(N) LENGTH	(N) TYPE	MINOR CONCRETE (CURB)	CI 2 AB *
			LF		CY	CY
L1	L†	177+33.55 TO 180+50.28	316.73	B1-6	9.28	20.82
L1	L†	181+17.79 TO 188+25.00	707.21	B1-6	20.72	46.49
L1-L2	L†	188+25.00 TO 199+34.22	1109.22	D-4Mod	38.20	99.67
L3	R†	215+91.44 TO 218+25.00	233.56	D-6	15.89	28.72
L3	R†	218+25.00 TO 220+57.01	232.01	B1-6	6.80	15.25
L4	R†	228+38.80 TO 228+67.06	25.00	B1-4	0.55	1.55
L4	L†	228+41.10 TO 228+66.10	25.00	B1-4	0.55	1.55
L4	L†	229+11.58 TO 229+36.58	25.00	B1-4	0.55	1.55
L4	R†	229+12.33 TO 229+37.33	25.00	B1-4	0.55	1.55
L4	R†	231+13.87 TO 231+45.86	44.37	B	1.25	2.32
L6	L†	256+08.58 TO 257+25.75	117.17	D-4	4.78	11.54
L6	R†	266+84.57 TO 266+92.48	7.91	D-4Mod	0.27	0.71
L6	R†	267+26.18 TO 267+88.07	61.89	D-4Mod	2.13	5.56
L6	L†	267+34.92 TO 270+26.29	291.37	D-4Mod	10.02	26.18
L8	R†	289+73.65 TO 290+72.54	98.89	D-4Mod	3.40	8.89
L8	R†	292+96.18 TO 296+25.00	328.82	B1-4	7.18	21.62
L9	R†	304+96.06 TO 305+27.82	31.76	D-4Mod	1.09	2.85
L9	R†	305+96.11 TO 306+13.53	17.42	D-4Mod	0.60	1.57
L10	R†	317+05.56 TO 320+17.69	312.13	B1-4	6.82	19.32
L10	R†	320+42.71 TO 321+25.00	82.29	B1-4	1.80	5.09
L11	L†	342+15.73 TO 344+52.77	237.04	D-4	9.68	23.34
L12	L†	356+10.81 TO 358+03.68	192.87	D-4Mod	6.64	17.33
L15	L†	396+49.00 TO 398+87.93	238.93	B1-6	7.00	23.53
		SUBTOTAL				386.99
		TOTAL			155.75	

(N) - NOT A SEPARATE PAY ITEM, FOR INFORMATION ONLY.

* - NOTE: EXCAVATION AND EMBANKMENT FOR CONCRETE CURBS (NOT SHOWN) ARE INCLUDED UNDER ROADWAY EXCAVATION AND EMBANKEMENT QUANTITIES. SEE SUMMARY OF QUANTITIES SHEET Q-1 FOR TOTAL QUANTITY.

DITCH EXCAVATION

L†/R†	SHEET	STATION LIMITS "A3" LINE	(N) LENGTH	(N) AREA	DITCH EXCAVATION
			LF	SQFT	CY
R†	L-4	230+54.55 TO 230+76.79	34.91	7.43	9.61
R†	L-4	230+76.79 TO 231+13.87	44.88	5.42	9.01
		TOTAL			18.62

CONCRETE LINED DITCH

L†/R†	SHEET	STATION LIMITS "A3" LINE	(N) LENGTH	(N) AREA	CONCRETE (DITCH LINING)
			LF	SQFT	CY
R†	L-6	270+66.26 TO 271+75.00	112.10	1.98	8.22
R†	L-12	350+00.00 TO 352+09.90	209.90	2.08	16.17
L†	L-12	349+75.00 TO 353+21.56	347.82	1.50	19.32
R†	L-13	363+60.00 TO 364+15.00	55.00	2.00	4.07
		TOTAL			47.79

NOTE: EXCAVATION AND EMBANKMENT FOR CONCRETE LINED DITCHES (NOT SHOWN) ARE INCLUDED UNDER ROADWAY EXCAVATION AND EMBANKEMENT QUANTITIES. SEE SUMMARY OF QUANTITIES SHEET Q-1 FOR TOTAL QUANTITY.

REMOVE AC DIKE

SHEET	L†/R†	LOCATION/ STATION LIMITS "A3" LINE	REMOVE AC DIKE
		MAINLINE	LF
L-1	L†	177+55.37 TO 180+43.94	288.6
L-1	L†	181+17.79 TO 199+34.22	1,816.4
L-3	R†	215+91.44 TO 220+57.01	465.6
L-6	L†	256+08.58 TO 257+25.75	117.2
L-6	L†	267+28.20 TO 270+26.29	298.4
L-8	R†	289+73.65 TO 290+72.54	98.9
L-8	R†	292+46.83 TO 296+25.00	448.1
L-9	R†	304+96.06 TO 305+27.82	31.8
L-9	R†	305+96.11 TO 306+13.53	17.4
L-10	R†	317+05.56 TO 322+93.16	587.6
L-11	L†	342+15.73 TO 344+52.77	237.0
L-15	L†	396+49.00 TO 398+87.93	238.9
		TOTAL	4645.9

NOTE: REMOVE AC DIKE AT ALL OTHER LOCATIONS (NOT SHOWN) IS INCLUDED UNDER ROADWAY EXCAVATION.

PLACE HMA (Misc AREA)

SHEET No.	DRAINAGE PROFILES SHEET No.	LOCATION STATION LIMITS "A3" LINE	PLACE HMA (Misc AREA)	HMA ** (TYPE A)	NOTES
			SQYD	TON	
L-6	DP-9	FROM 266+92.48 TO 267+26.18 R†	6.76	2.18	Mod HMA OVERSIDE DRAIN
L-10	DP-16	FROM 320+17.69 TO 320+71.00 R†	6.90	2.22	Mod HMA OVERSIDE DRAIN
L-6	DP-9	FROM 267+30.69 TO 267+34.92 L†	3.41	0.59	HMA SLOPE PROTECTION
L-11	N/A	FROM 341+33.40 TO 341+43.40 R†	12.22	3.14	HMA SLOPE PROTECTION
		TOTAL	29.29	8.13	

** - SEE SUMMARY OF QUANTITIES SHEET Q-1 FOR TOTAL QUANTITY.

SUMMARY OF QUANTITIES
Q-3

REVISED BY | DATE REVISED
MAHBOOBEH DEILAMI | J. A. HUERTA
CALCULATED-DESIGNED BY | CHECKED BY
FUNCTIONAL SUPERVISOR: CARLOS A. PORTILLO
STATE OF CALIFORNIA - DEPARTMENT OF TRANSPORTATION
NORTH REGION
DIVISION OF ENGINEERING
Caltrans

LAST REVISION | DATE PLOTTED => 18-MAR-2015
05-21-14 | TIME PLOTTED => 15:10

BORDER LAST REVISED 7/2/2010 | USERNAME => s130875 | DGN FILE => 0300000224pa003.dgn | RELATIVE BORDER SCALE IS IN INCHES 0 1 2 3 | UNIT 0305 | PROJECT NUMBER & PHASE 03000002241

Dist	COUNTY	ROUTE	POST MILES TOTAL PROJECT	SHEET No.	TOTAL SHEETS
03	ED	89	13.8/18.0	132	164

JEFFREY L. PIETRZAK
LICENSED LANDSCAPE ARCHITECT
6-16-14
PLANS APPROVAL DATE

LICENSED LANDSCAPE ARCHITECT — JEFF L. PIETRZAK NO. 4057 — Signature — 12-13-15 Renewal Date — 6-10-14 Date — STATE OF CALIFORNIA

THE STATE OF CALIFORNIA OR ITS OFFICERS OR AGENTS SHALL NOT BE RESPONSIBLE FOR THE ACCURACY OR COMPLETENESS OF SCANNED COPIES OF THIS PLAN SHEET.

SEED MIX

SEED	BOTANICAL NAME (COMMON NAME)	PERCENT GERMINATION (MINIMUM)	POUNDS PURE LIVE SEED PER ACRE (SLOPE MEASUREMENT)
(MIX 1)	ACHILLEA MILLEFOLIUM [1] (WHITE YARROW)	77	.68
	ACHNATHERUM OCCIDENTALIS [1] (WESTERN NEEDLEGRASS)	63	2.9
	ASTER OCCIDENTALIS [1] (WESTERN ASTER)	36	.22
	BROMUS CARINATUS [1] (CALIFORNIA BROME)	72	8.71
	ELYMUS ELYMOIDES [1] (BOTTLEBRUSH SQUIRRELTAIL)	54	7.3
	EPILOBIUM CANUM [1] (CALIFORNIA FUCHSIA)	36	.38
	ERIOGONUM UMBELLATUM [1] (SULPHUR FLOWER BUCKWHEAT)	45	6.53
	ISOMOPSIS AGGREGATEA [1] (SCARLET GILIA)	45	3.66
	LOTUS PURSHIANUS [1] (PURSHING LOTUS)	63	8.30
	LUPINUS BREWERI [1] (BREWERS LUPINE)	63	8.17
	PHACELIA HYDROPHYLLOIDES [1] (LACY PHACELIA)	45	2.78
	POA SECUNDA [1] (PINE BLUEGRASS)	63	2.75
	POTENTILLA GRACILIS [1] (SLENDER CINQUEFOIL)	63	.51
	PURSHIA TRIDENTATE [1] (ANTELOPE BITTERBRUSH)	77	2.90
	RIBES CEREUM [1] (WAX CURRANT)	63	1.24
	SIDALCEA OREGONA [1] (SPICATE CHECKER BROOM)	63	.97
	SOLDAGIO CANADENSIS [1] (CANADA GOLDENROD)	63	.47
	WYETHIA MOLLIS [1] (WOOLY MULE-EARS)	63	3.48
			61.94

[1] SEED SOURCE FROM SIERRA NEVADA SOURCES ABOVE THE 4000 FOOT ELEVATION LEVEL.

EROSION CONTROL TYPE 1

SEQUENCE	ITEM	MATERIAL		APPLICATION RATE
		DESCRIPTION	TYPE	
STEP 1	BONDED FIBER MATRIX (TYPE 1)	SEED	MIX 1	61.94 LB/ACRE
		FERTILIZER	ORGANIC	1,800 LB/ACRE
		FIBER	WOOD	--
		TACKIFIER	MANUFACTURER RECOMMENDATION	4,500 LB/ACRE

EROSION CONTROL TYPE 2

SEQUENCE	ITEM	MATERIAL			APPLICATION RATE
		DESCRIPTION	TYPE	LENGTH	
STEP 1	COMPOST (TYPE 1)	COMPOST	COARSE (MODIFIED)	--	4"
STEP 2	INCORPORATE MATERIALS	COMPOST	--	--	18"
STEP 3	BONDED FIBER MATRIX (TYPE 1)	SEED	MIX 1	--	61.94 LB/ACRE
		FERTILIZER	ORGANIC	--	1,800 LB/ACRE
		FIBER	WOOD	--	--
		TACKIFIER	MANUFACTURER RECOMMENDATION	--	4,500 LB/ACRE
STEP 4	STRAW	STRAW	PINE NEEDLES	--	3.6 TONS/ACRE
STEP 3	ROLLED EROSION CONTROL PRODUCT (NETTING)	NETTING	TYPE A	--	--
		FASTENERS	STEEL PIN	12"	MANUFACTURER RECOMMENDATION

EROSION CONTROL TYPE 3

SEQUENCE	ITEM	MATERIAL		APPLICATION RATE
		DESCRIPTION	TYPE	
STEP 1	COMPOST (TYPE 1)	COMPOST	COARSE (MODIFIED)	4"
STEP 2	INCORPORATE MATERIALS	COMPOST	--	18"
STEP 3	BONDED FIBER MATRIX (TYPE 1)	SEED	MIX 1	61.94 LB/ACRE
		FERTILIZER	ORGANIC	1,800 LB/ACRE
		FIBER	WOOD	--
		TACKIFIER	MANUFACTURER RECOMMENDATION	4,500 LB/ACRE

EROSION CONTROL TYPE 4

SEQUENCE	ITEM	MATERIAL			APPLICATION RATE
		DESCRIPTION	TYPE	LENGTH	
STEP 1	ROLLED EROSION CONTROL PRODUCT (TURF REINFORCEMENT MAT)	TURF REINFORCEMENT MAT	TYPE C	--	--
		FASTENERS	STEEL PIN	12"	PER DETAIL
			EARTH ANCHOR	24"	PER DETAIL
STEP 2	COMPOST (TYPE 2)	COMPOST	FINE	--	1" DEPTH IN TRM
STEP 3	BONDED FIBER MATRIX (TYPE 1)	SEED	MIX 1	--	61.94 LB/ACRE
		FERTILIZER	ORGANIC	--	1,800 LB/ACRE
		FIBER	WOOD	--	--
		TACKIFIER	PER MANUFACTURER	--	4,500 LB/ACRE

EROSION CONTROL LEGEND

ECL-1

REVISED BY | DATE REVISED
J. PIETRZAK | J. KURTH
CALCULATED-DESIGNED BY | CHECKED BY
SENIOR LANDSCAPE ARCHITECT: T. CHRIS JOHNSON
STATE OF CALIFORNIA - DEPARTMENT OF TRANSPORTATION
Caltrans® LANDSCAPE ARCHITECTURE

LAST REVISION 00-00-00 | DATE PLOTTED => 18-MAR-2015 | TIME PLOTTED => 15:10

Dist	COUNTY	ROUTE	POST MILES TOTAL PROJECT	SHEET No.	TOTAL SHEETS
03	ED	89	13.8/18.0	133	164

JEFFREY L. PIETRZAK
LICENSED LANDSCAPE ARCHITECT

6-16-14
PLANS APPROVAL DATE

LICENSED LANDSCAPE ARCHITECT
JEFF L. PIETRZAK No. 4057
Signature
12-13-15
Renewal Date
6-10-14
Date
STATE OF CALIFORNIA

THE STATE OF CALIFORNIA OR ITS OFFICERS OR AGENTS SHALL NOT BE RESPONSIBLE FOR THE ACCURACY OR COMPLETENESS OF SCANNED COPIES OF THIS PLAN SHEET.

EROSION CONTROL TYPE 5

SEQUENCE	ITEM	MATERIAL		APPLICATION RATE
		DESCRIPTION	TYPE	
STEP 1	COMPOST (TYPE 1)	COMPOST	COARSE (MODIFIED)	4"
STEP 2	INCORPORATE MATERIALS	COMPOST	--	18"
STEP 3	ROLLED EROSION CONTROL PRODUCT (TURF REINFORCEMENT MAT)	TURF REINFORCEMENT MAT	TYPE A	--
		FASTENERS	EARTH ANCHOR	--
STEP 4	COMPOST (TYPE 2)	COMPOST	FINE	1" DEPTH IN TRM
STEP 5	BONDED FIBER MATRIX (TYPE 2)	SEED	MIX 1	61.94 LB/ACRE
		FERTILIZER	ORGANIC	1,800 LB/ACRE
		FIBER	WOOD	--
		TACKIFIER	PER MANUFACTURER	2,500 LB/ACRE
STEP 6	STRAW	STRAW	PINE NEEDLES	3.6 TONS/ACRE
STEP 7	ROLLED EROSION CONTROL PRODUCT (NETTING)	NETTING	TYPE A	--
		FASTENERS	ANCHOR PIN	--

EROSION CONTROL TYPE 6

SEQUENCE	ITEM	MATERIAL				APPLICATION RATE
		DESCRIPTION	TYPE	LENGTH	MATERIAL RATE	
STEP 1	CORING	CORING	--	--	--	12" DIAMETER 18" DEPTH 4' ON CENTER
STEP 2	IMPORTED TOPSOIL (MODIFIED)	IMPORTED TOPSOIL	IMPORTED TOPSOIL	--	50% OF MIX	2.35 CF PER CORE
		COMPOST	COARSE (MODIFIED)	--	50% OF MIX	
STEP 3	COMPOST (TYPE 1)	COMPOST	COARSE (MODIFIED)	--	--	2"
STEP 4	ROLLED EROSION CONTROL PRODUCT (TURF REINFORCEMENT MAT)	TURF REINFORCEMENT MAT	TYPE D	--	--	--
		FASTENERS	STEEL PIN	12"	--	1.5' O.C. 1' O.C.-KEY TRENCH
			EARTH ANCHOR	24"	--	1/2 ANCHOR/ SQYD
STEP 5	BONDED FIBER MATRIX (TYPE 1)	SEED	MIX 1	--	--	61.94 LB/ACRE
		FERTILIZER	ORGANIC	--	--	1,800 LB/ACRE
		FIBER	WOOD	--	--	--
		TACKIFIER	PER MANUFACTURER	--	--	4,500 LB/ACRE

EROSION CONTROL TYPE 7

SEQUENCE	ITEM	MATERIAL		APPLICATION RATE
		DESCRIPTION	TYPE	
STEP 1	COMPOST (TYPE 1)	COMPOST	COARSE (MODIFIED)	2"
STEP 2	BONDED FIBER MATRIX (TYPE 1)	SEED	MIX 1	61.94 LB/ACRE
		FERTILIZER	ORGANIC	1,800 LB/ACRE
		FIBER	WOOD	--
		TACKIFIER	PER MANUFACTURER	4,500 LB/ACRE

EROSION CONTROL LEGEND

ECL-2

REVISED BY | DATE REVISED
J. PIETRZAK | J. KURTH
CALCULATED-DESIGNED BY | CHECKED BY
SENIOR LANDSCAPE ARCHITECT: T. CHRIS JOHNSON
STATE OF CALIFORNIA - DEPARTMENT OF TRANSPORTATION
Caltrans® LANDSCAPE ARCHITECTURE

LAST REVISION | DATE PLOTTED => 18-MAR-2015
00-00-00 | TIME PLOTTED => 15:10

BORDER LAST REVISED 7/2/2010 | USERNAME => s130875 | DGN FILE => 0300000224tc002.dgn | RELATIVE BORDER SCALE IS IN INCHES 0 1 2 3 | UNIT 0381 | PROJECT NUMBER & PHASE 03000002241

Dist	COUNTY	ROUTE	POST MILES TOTAL PROJECT	SHEET No.	TOTAL SHEETS
03	ED	89	13.8/18.0	134	164

JEFFREY L. PIETRZAK
LICENSED LANDSCAPE ARCHITECT

6-16-14
PLANS APPROVAL DATE

LICENSED LANDSCAPE ARCHITECT
JEFF L. PIETRZAK NO. 4057
Signature
12-13-15
Renewal Date
6-10-14
Date
STATE OF CALIFORNIA

THE STATE OF CALIFORNIA OR ITS OFFICERS OR AGENTS SHALL NOT BE RESPONSIBLE FOR THE ACCURACY OR COMPLETENESS OF SCANNED COPIES OF THIS PLAN SHEET.

ABBREVIATIONS:

EC - EROSION CONTROL

LEGEND:

No. X — EROSION CONTROL SHEET NUMBER

EROSION CONTROL AREA

EROSION CONTROL (TYPE 1)

FLAT AREAS
UPLAND CONDITION

- BONDED FIBER MATRIX (TYPE 1)

EROSION CONTROL (TYPE 2)

FLAT AREAS- UNDER TREE CANOPY
UPLAND CONDITION

- COMPOST (TYPE 1)
- INCORPORATE MATERIALS
- BONDED FIBER MATRIX (TYPE 1)
- STRAW
- RECP (NETTING)

EROSION CONTROL (TYPE 3)

2:1 SLOPES AND FLATTER
UPLAND CONDITION

- COMPOST (TYPE 1)
- INCORPORATE MATERIALS
- BONDED FIBER MATRIX (TYPE 1)

EROSION CONTROL (TYPE 4)

STEEPER THAN 2:1 SLOPES
UPLAND CONDITION

- RECP (TRM)
- COMPOST (TYPE 2)
- BONDED FIBER MATRIX (TYPE 1)

EROSION CONTROL (TYPE 5)

CULVERT FLOWLINE, BASINS
LOWLAND CONDITON

- COMPOST (TYPE 1)
- INCORPORATE MATERIALS
- RECP (TRM)
- COMPOST (TYPE 2)
- BONDED FIBER MATRIX (TYPE 2)
- STRAW
- RECP (NETTING)

EROSION CONTROL (TYPE 6)

STEEPER THAN 2:1 SLOPES
REVEGETATION AROUND
EXISTING VEGETATION
UPLAND CONDITON

- CORING
- IMPORTED TOPSOIL (MODIFIED)
- COMPOST (TYPE 1)
- RECP (TRM)
- COMPOST (TYPE 2)
- BONDED FIBER MATRIX (TYPE 1)

EROSION CONTROL (TYPE 7)

UNDER VIADUCT
UPLAND CONDITION

- COMPOST (TYPE 1)
- BONDED FIBER MATRIX (TYPE 1)

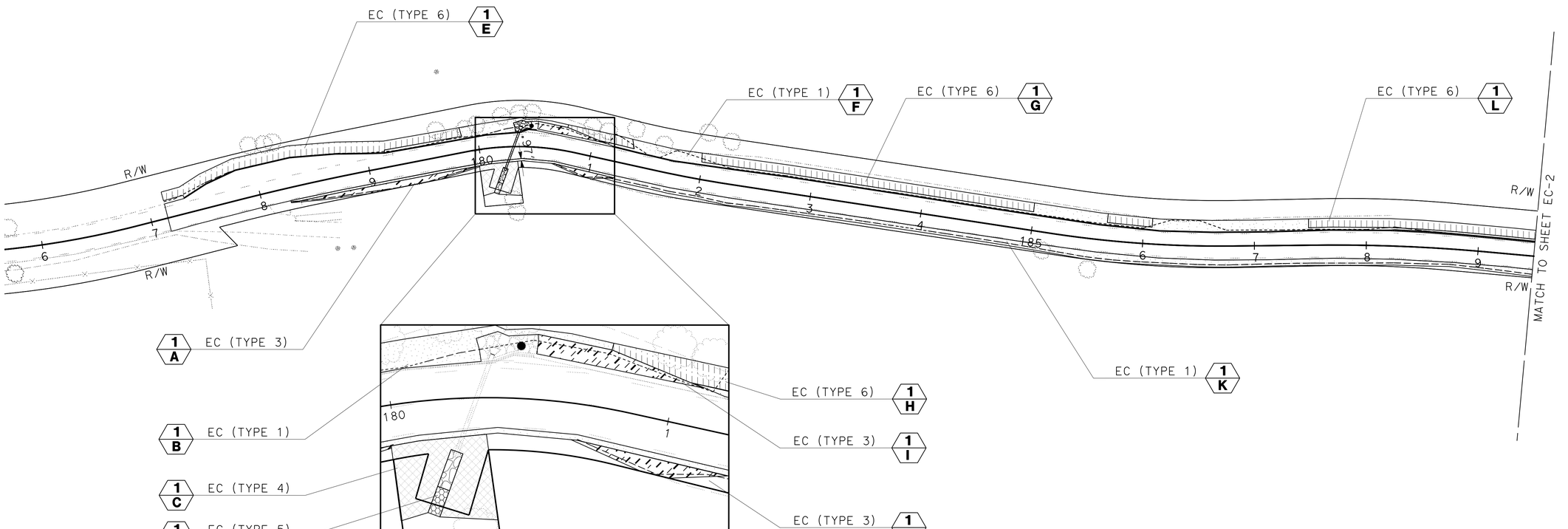

NOTE:

FOR ACCURATE RIGHT OF WAY DATA, CONTACT
RIGHT OF WAY ENGINEERING AT THE DISTRICT OFFICE.

APPROVED FOR EROSION CONTROL WORK ONLY

EROSION CONTROL PLAN

SCALE 1" = 50'

EC-1

STATE OF CALIFORNIA - DEPARTMENT OF TRANSPORTATION
LANDSCAPE ARCHITECTURE
SENIOR LANDSCAPE ARCHITECT: T. CHRIS JOHNSON
CALCULATED-DESIGNED BY: J. PIETRZAK
CHECKED BY: J. KURTH
REVISED BY
DATE REVISED

LAST REVISION DATE PLOTTED => 18-MAR-2015
00-00-00 TIME PLOTTED => 15:10

BORDER LAST REVISED 7/2/2010 | USERNAME => s130875 | DGN FILE => 0300000224te001.dgn | RELATIVE BORDER SCALE IS IN INCHES 0 1 2 3 | UNIT 0381 | PROJECT NUMBER & PHASE 03000002241

Dist	COUNTY	ROUTE	POST MILES TOTAL PROJECT	SHEET No.	TOTAL SHEETS
03	ED	89	13.8/18.0	135	164

LICENSED LANDSCAPE ARCHITECT

6-16-14
PLANS APPROVAL DATE

THE STATE OF CALIFORNIA OR ITS OFFICERS OR AGENTS SHALL NOT BE RESPONSIBLE FOR THE ACCURACY OR COMPLETENESS OF SCANNED COPIES OF THIS PLAN SHEET.

LICENSED LANDSCAPE ARCHITECT
JEFF L. PIETRZAK NO. 4503
Signature
12-13-15
Renewal Date
6-10-14
Date
STATE OF CALIFORNIA

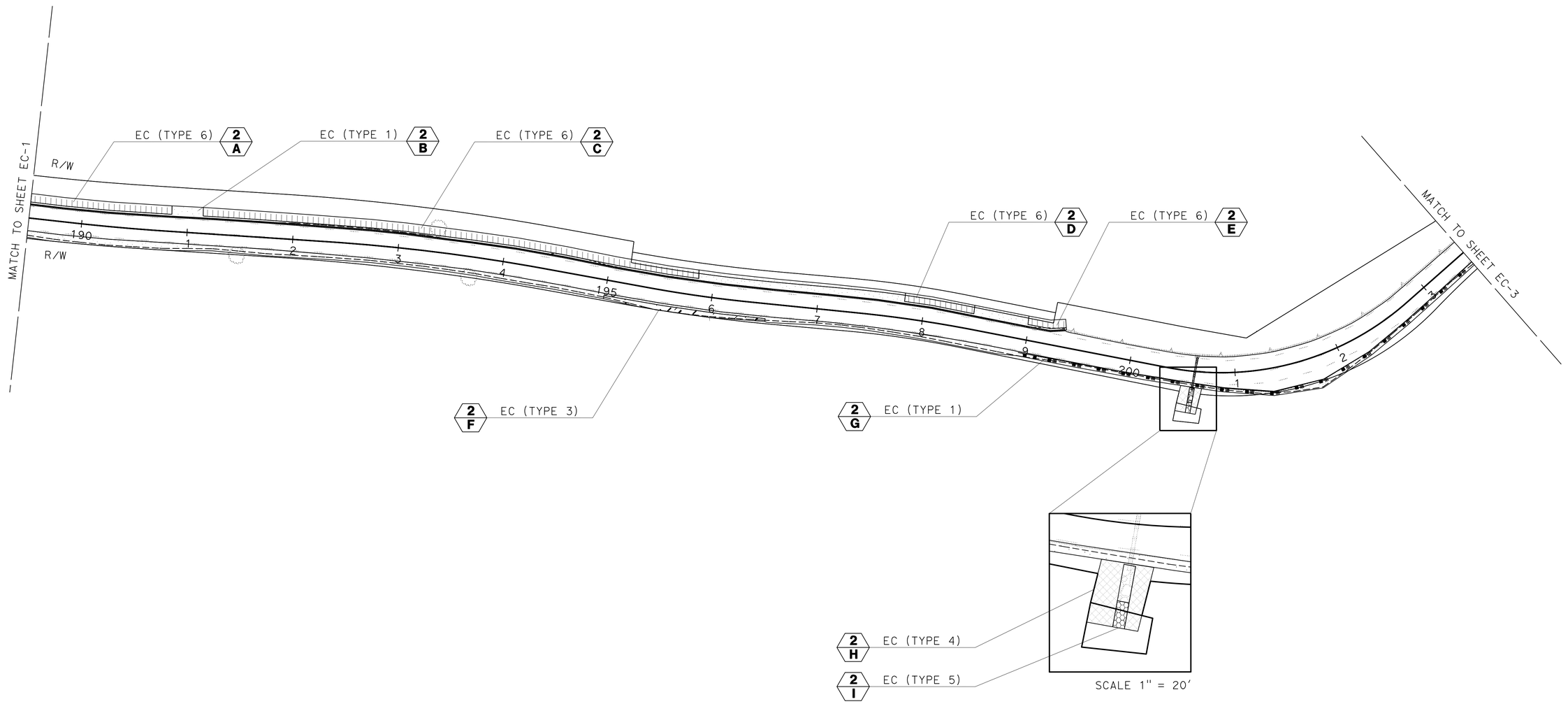

NOTE:
FOR ACCURATE RIGHT OF WAY DATA, CONTACT RIGHT OF WAY ENGINEERING AT THE DISTRICT OFFICE.

APPROVED FOR EROSION CONTROL WORK ONLY

EROSION CONTROL PLAN

SCALE 1" = 50'

EC-2

REVISED BY	DATE REVISED
J. PIETRZAK	J. KURTH

CALCULATED-DESIGNED BY
CHECKED BY

SENIOR LANDSCAPE ARCHITECT
T. CHRIS JOHNSON

STATE OF CALIFORNIA - DEPARTMENT OF TRANSPORTATION
Caltrans® LANDSCAPE ARCHITECTURE

LAST REVISION 00-00-00
DATE PLOTTED => 18-MAR-2015
TIME PLOTTED => 15:10

BORDER LAST REVISED 7/2/2010
USERNAME => s130875
DGN FILE => 0300000224te002.dgn
RELATIVE BORDER SCALE IS IN INCHES 0 1 2 3
UNIT 0381
PROJECT NUMBER & PHASE 03000002241

Dist	COUNTY	ROUTE	POST MILES TOTAL PROJECT	SHEET No.	TOTAL SHEETS
03	ED	89	13.8/18.0	136	164

JEFFREY L. PIETRZAK
LICENSED LANDSCAPE ARCHITECT

6-16-14
PLANS APPROVAL DATE

LICENSED LANDSCAPE ARCHITECT
JEFF L. PIETRZAK NO. 4057
Signature
12-13-15
Renewal Date
6-10-14
Date
STATE OF CALIFORNIA

THE STATE OF CALIFORNIA OR ITS OFFICERS OR AGENTS SHALL NOT BE RESPONSIBLE FOR THE ACCURACY OR COMPLETENESS OF SCANNED COPIES OF THIS PLAN SHEET.

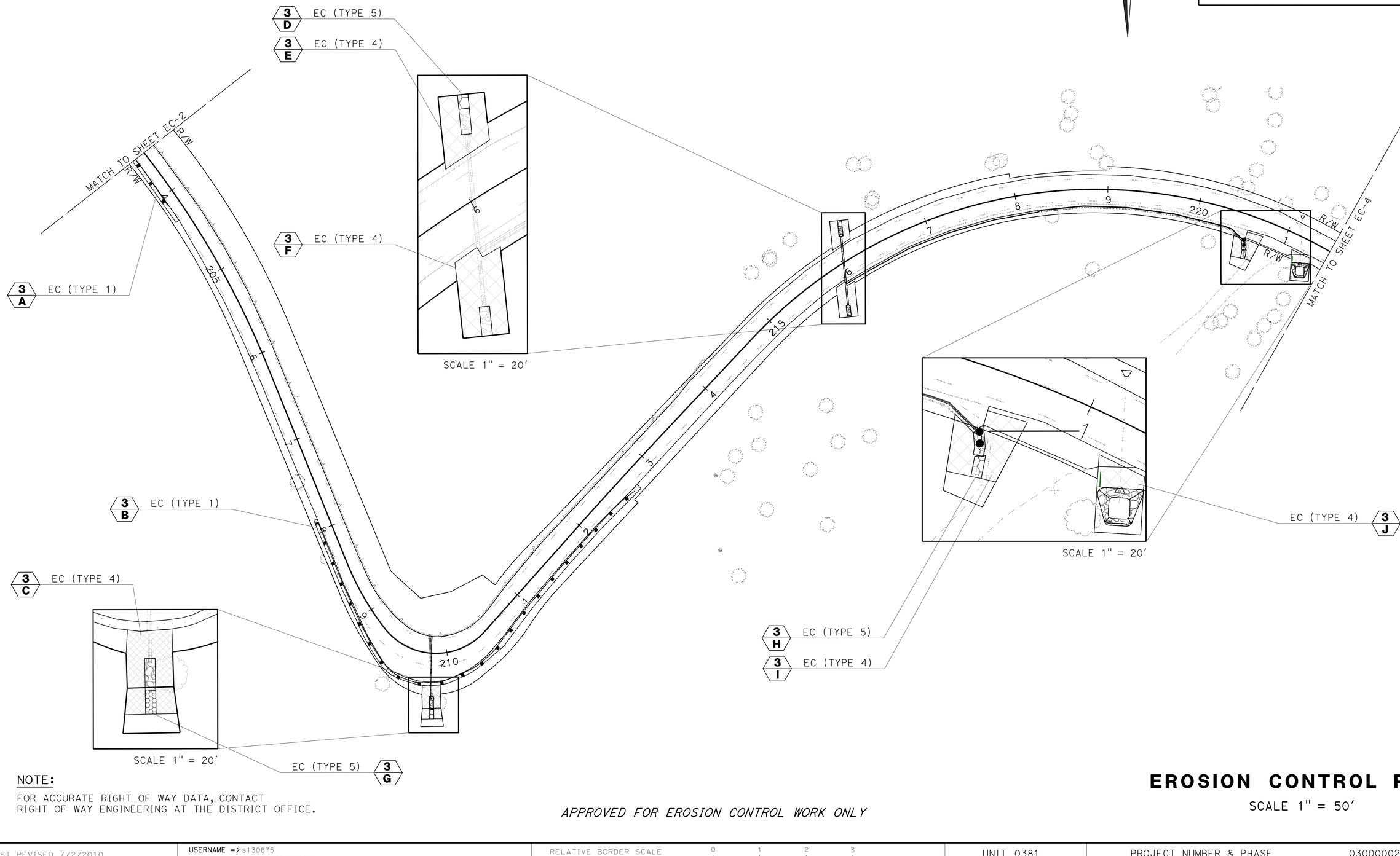

NOTE:

FOR ACCURATE RIGHT OF WAY DATA, CONTACT RIGHT OF WAY ENGINEERING AT THE DISTRICT OFFICE.

APPROVED FOR EROSION CONTROL WORK ONLY

EROSION CONTROL PLAN

SCALE 1" = 50'

EC-3

STATE OF CALIFORNIA - DEPARTMENT OF TRANSPORTATION
LANDSCAPE ARCHITECTURE
SENIOR LANDSCAPE ARCHITECT: T. CHRIS JOHNSON
CALCULATED-DESIGNED BY: J. PIETRZAK
CHECKED BY: J. KURTH
REVISED BY
DATE REVISED

LAST REVISION 00-00-00
DATE PLOTTED => 18-MAR-2015
TIME PLOTTED => 15:10

BORDER LAST REVISED 7/2/2010
USERNAME => s130875
DGN FILE => 0300000224te003.dgn
RELATIVE BORDER SCALE IS IN INCHES 0 1 2 3
UNIT 0381
PROJECT NUMBER & PHASE 03000002241

Dist	COUNTY	ROUTE	POST MILES TOTAL PROJECT	SHEET No.	TOTAL SHEETS
03	ED	89	13.8/18.0	137	164

LICENSED LANDSCAPE ARCHITECT

6-16-14
PLANS APPROVAL DATE

THE STATE OF CALIFORNIA OR ITS OFFICERS OR AGENTS SHALL NOT BE RESPONSIBLE FOR THE ACCURACY OR COMPLETENESS OF SCANNED COPIES OF THIS PLAN SHEET.

LICENSED LANDSCAPE ARCHITECT
JEFF L. PIETRZAK No. 4457
Signature
12-13-15
Renewal Date
6-10-14
Date
STATE OF CALIFORNIA

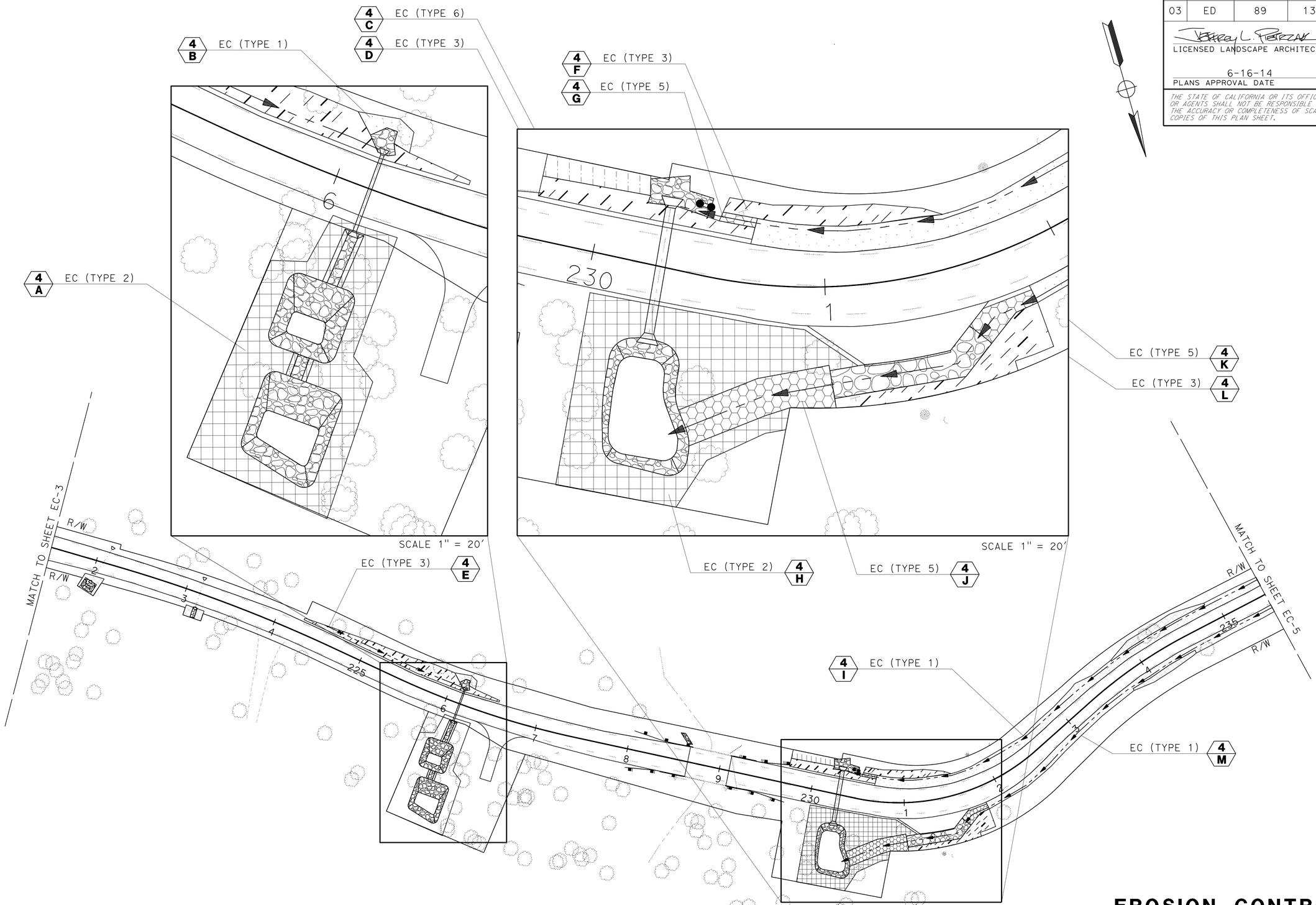

NOTE:

FOR ACCURATE RIGHT OF WAY DATA, CONTACT RIGHT OF WAY ENGINEERING AT THE DISTRICT OFFICE.

APPROVED FOR EROSION CONTROL WORK ONLY

EROSION CONTROL PLAN

SCALE 1" = 50'

EC-4

STATE OF CALIFORNIA - DEPARTMENT OF TRANSPORTATION
Caltrans® LANDSCAPE ARCHITECTURE

SENIOR LANDSCAPE ARCHITECT: T. CHRIS JOHNSON
CALCULATED-DESIGNED BY: J. PIETRZAK
CHECKED BY: J. KURTH
REVISED BY
DATE REVISED

LAST REVISION 02-18-15
DATE PLOTTED => 18-MAR-2015
TIME PLOTTED => 15:10

Dist	COUNTY	ROUTE	POST MILES TOTAL PROJECT	SHEET No.	TOTAL SHEETS
03	ED	89	13.8/18.0	138	164

LICENSED LANDSCAPE ARCHITECT

6-16-14
PLANS APPROVAL DATE

LICENSED LANDSCAPE ARCHITECT
JEFF L. PIETRZAK NO. 4057
Signature
12-13-15
Renewal Date
6-10-14
Date
STATE OF CALIFORNIA

THE STATE OF CALIFORNIA OR ITS OFFICERS OR AGENTS SHALL NOT BE RESPONSIBLE FOR THE ACCURACY OR COMPLETENESS OF SCANNED COPIES OF THIS PLAN SHEET.

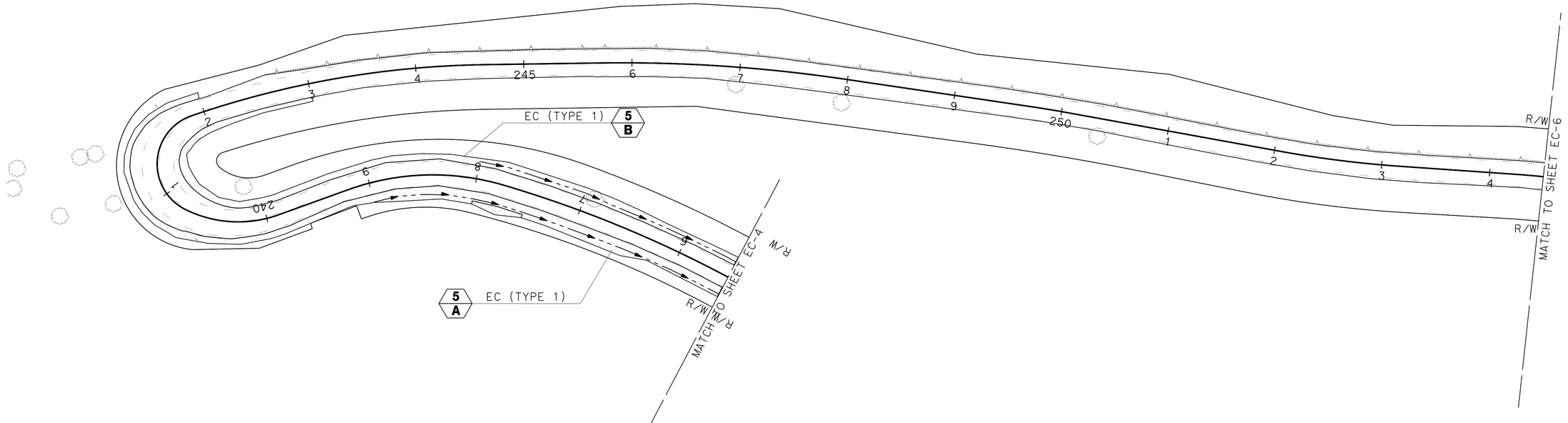

NOTE:

FOR ACCURATE RIGHT OF WAY DATA, CONTACT RIGHT OF WAY ENGINEERING AT THE DISTRICT OFFICE.

APPROVED FOR EROSION CONTROL WORK ONLY

EROSION CONTROL PLAN

SCALE 1" = 50'

EC-5

J. PIETRZAK	DESIGNED BY
J. KURTH	CHECKED BY
	DATE REVISED
	REVISED BY

STATE OF CALIFORNIA - DEPARTMENT OF TRANSPORTATION
LANDSCAPE ARCHITECTURE
SENIOR LANDSCAPE ARCHITECT
T. CHRIS JOHNSON

LAST REVISION: DATE PLOTTED => 18-MAR-2015
00-00-00 TIME PLOTTED => 15:10

BORDER LAST REVISED 7/2/2010

USERNAME => s130875
DGN FILE => 0300000224te005.dgn

RELATIVE BORDER SCALE IS IN INCHES 0 1 2 3

UNIT 0381

PROJECT NUMBER & PHASE 03000002241

Dist	COUNTY	ROUTE	POST MILES TOTAL PROJECT	SHEET No.	TOTAL SHEETS
03	ED	89	13.8/18.0	139	164

JEFFREY L. PIETRZAK
LICENSED LANDSCAPE ARCHITECT

6-16-14
PLANS APPROVAL DATE

LICENSED LANDSCAPE ARCHITECT
JEFF L. PIETRZAK NO. 4057
Signature
12-13-15
Renewal Date
6-10-14
Date
STATE OF CALIFORNIA

THE STATE OF CALIFORNIA OR ITS OFFICERS OR AGENTS SHALL NOT BE RESPONSIBLE FOR THE ACCURACY OR COMPLETENESS OF SCANNED COPIES OF THIS PLAN SHEET.

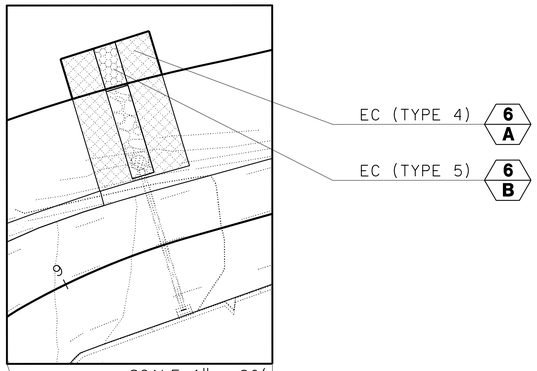

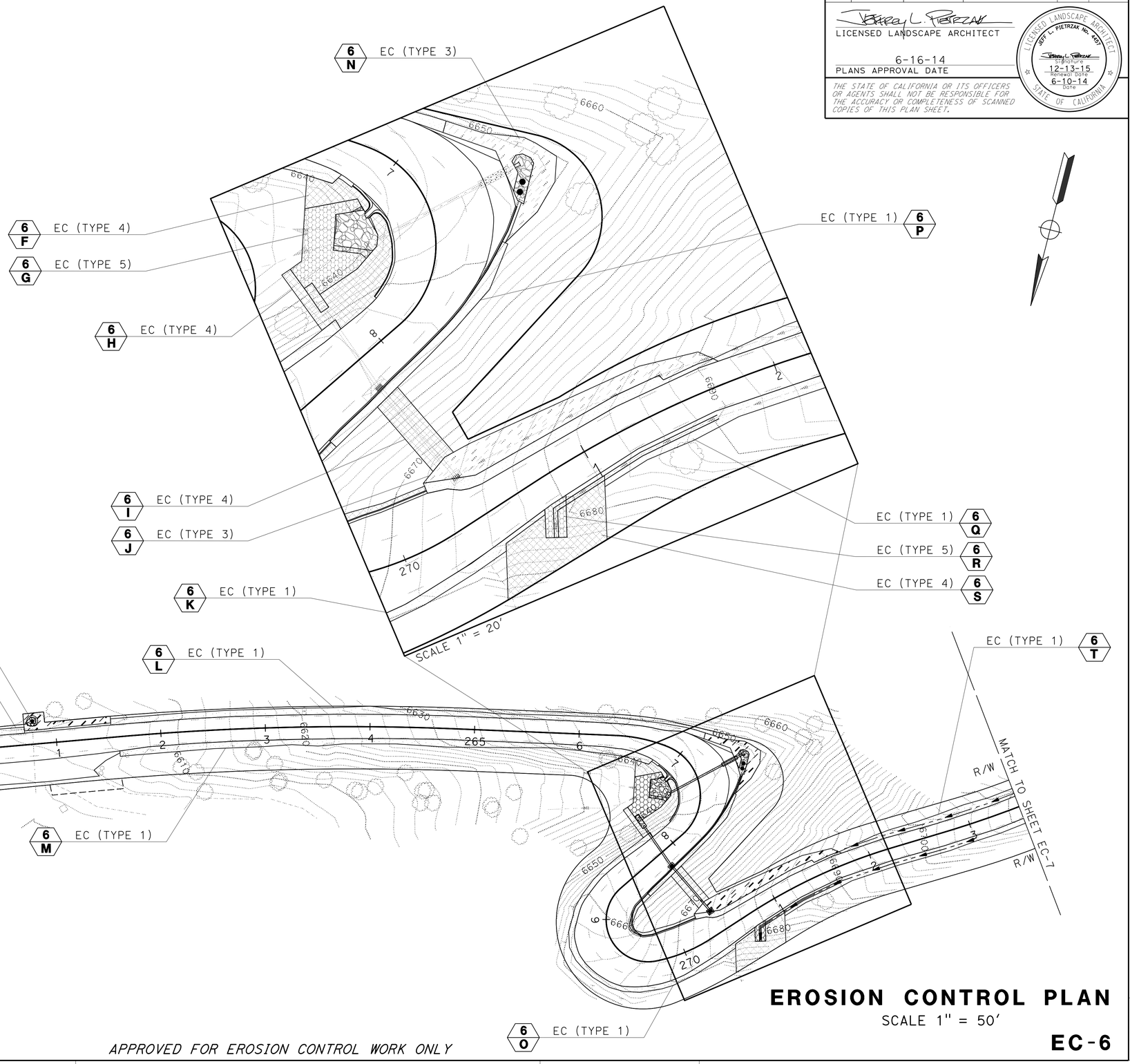

NOTE:
FOR ACCURATE RIGHT OF WAY DATA, CONTACT RIGHT OF WAY ENGINEERING AT THE DISTRICT OFFICE.

APPROVED FOR EROSION CONTROL WORK ONLY

EROSION CONTROL PLAN
SCALE 1" = 50'

EC-6

REVISED BY | DATE REVISED
J. PIETRZAK | J. KURTH
CALCULATED-DESIGNED BY | CHECKED BY
T. CHRIS JOHNSON
SENIOR LANDSCAPE ARCHITECT

STATE OF CALIFORNIA - DEPARTMENT OF TRANSPORTATION
Caltrans® LANDSCAPE ARCHITECTURE

LAST REVISION 00-00-00 | DATE PLOTTED => 18-MAR-2015 | TIME PLOTTED => 15:10

BORDER LAST REVISED 7/2/2010 | USERNAME => s130875 | DGN FILE => 0300000224te006.dgn | RELATIVE BORDER SCALE IS IN INCHES 0 1 2 3 | UNIT 0381 | PROJECT NUMBER & PHASE 03000002241

Dist	COUNTY	ROUTE	POST MILES TOTAL PROJECT	SHEET No.	TOTAL SHEETS
03	ED	89	13.8/18.0	140	164

JEFFREY L. PIETRZAK
LICENSED LANDSCAPE ARCHITECT

6-16-14
PLANS APPROVAL DATE

LICENSED LANDSCAPE ARCHITECT
JEFF L. PIETRZAK No. 4057
Signature
12-13-15
Renewal Date
6-10-14
Date
STATE OF CALIFORNIA

THE STATE OF CALIFORNIA OR ITS OFFICERS OR AGENTS SHALL NOT BE RESPONSIBLE FOR THE ACCURACY OR COMPLETENESS OF SCANNED COPIES OF THIS PLAN SHEET.

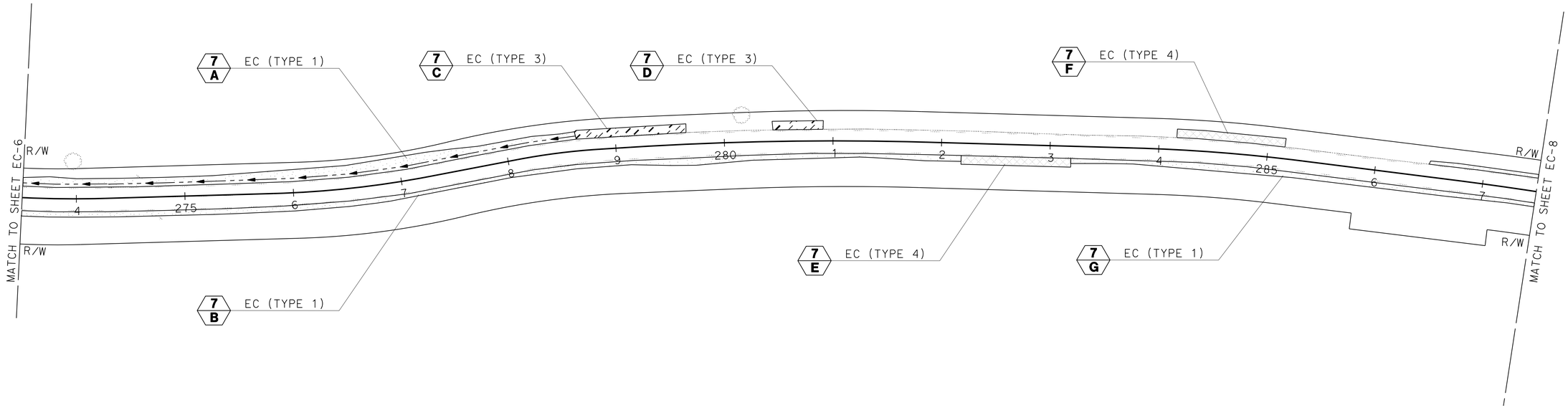

NOTE:

FOR ACCURATE RIGHT OF WAY DATA, CONTACT RIGHT OF WAY ENGINEERING AT THE DISTRICT OFFICE.

APPROVED FOR EROSION CONTROL WORK ONLY

EROSION CONTROL PLAN

SCALE 1" = 50'

EC-7

CALCULATED-DESIGNED BY: J. PIETRZAK
CHECKED BY: J. KURTH
REVISED BY
DATE REVISED
SENIOR LANDSCAPE ARCHITECT: T. CHRIS JOHNSON
STATE OF CALIFORNIA - DEPARTMENT OF TRANSPORTATION
Gates® LANDSCAPE ARCHITECTURE

LAST REVISION: DATE PLOTTED => 18-MAR-2015 TIME PLOTTED => 15:10
00-00-00

BORDER LAST REVISED 7/2/2010
USERNAME => s130875
DGN FILE => 0300000224te007.dgn
RELATIVE BORDER SCALE IS IN INCHES 0 1 2 3
UNIT 0381
PROJECT NUMBER & PHASE 03000002241

Dist	COUNTY	ROUTE	POST MILES TOTAL PROJECT	SHEET No.	TOTAL SHEETS
03	ED	89	13.8/18.0	141	164

LICENSED LANDSCAPE ARCHITECT

6-16-14
PLANS APPROVAL DATE

THE STATE OF CALIFORNIA OR ITS OFFICERS OR AGENTS SHALL NOT BE RESPONSIBLE FOR THE ACCURACY OR COMPLETENESS OF SCANNED COPIES OF THIS PLAN SHEET.

LICENSED LANDSCAPE ARCHITECT
JEFF L. PIETRZAK NO. 4057
Signature
12-13-15
Renewal Date
6-10-14
Date
STATE OF CALIFORNIA

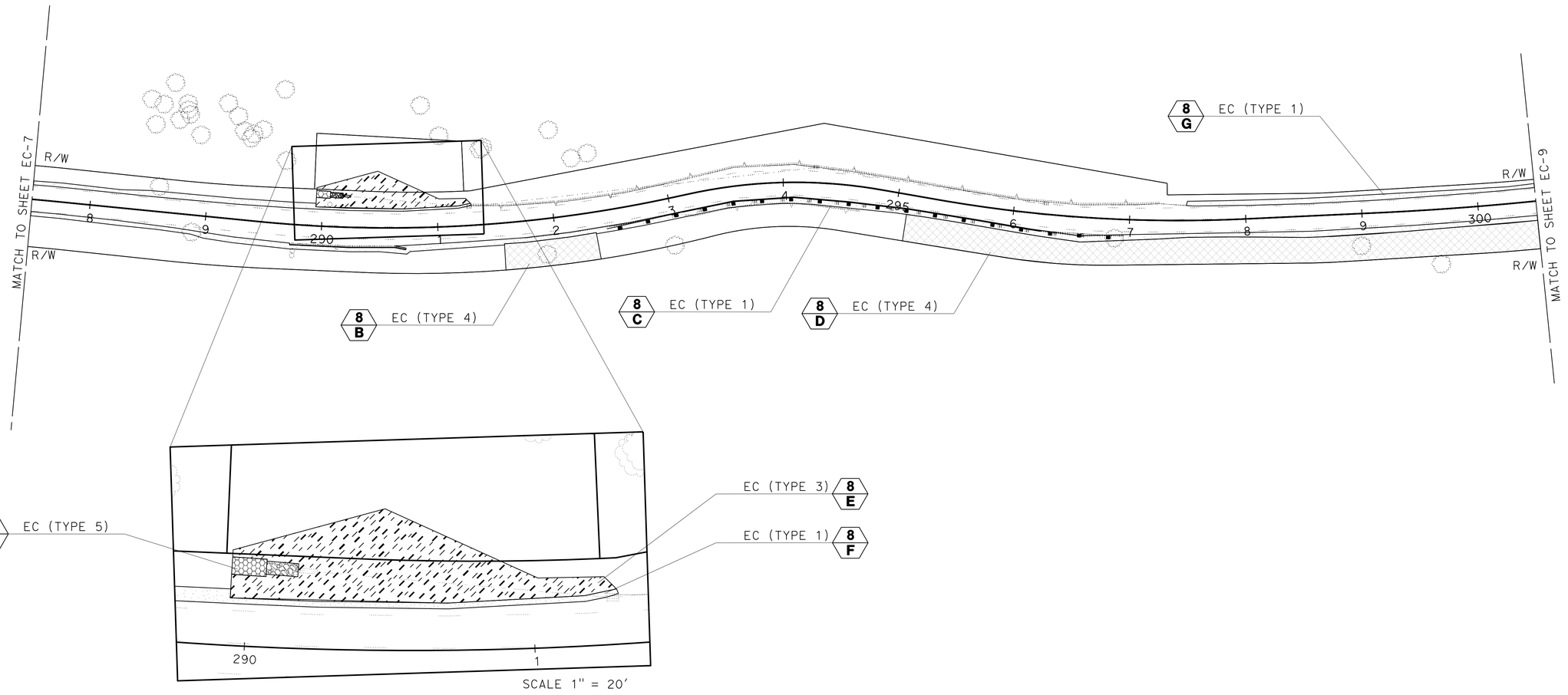

NOTE:
FOR ACCURATE RIGHT OF WAY DATA, CONTACT RIGHT OF WAY ENGINEERING AT THE DISTRICT OFFICE.

APPROVED FOR EROSION CONTROL WORK ONLY

EROSION CONTROL PLAN

SCALE 1" = 50'

EC-8

STATE OF CALIFORNIA - DEPARTMENT OF TRANSPORTATION
Caltrans® LANDSCAPE ARCHITECTURE
SENIOR LANDSCAPE ARCHITECT: T. CHRIS JOHNSON
CALCULATED-DESIGNED BY: J. PIETRZAK
CHECKED BY: J. KURTH
REVISED BY
DATE REVISED

LAST REVISION: DATE PLOTTED => 18-MAR-2015 TIME PLOTTED => 15:10
00-00-00

BORDER LAST REVISED 7/2/2010
USERNAME => s130875
DGN FILE => 0300000224te008.dgn
RELATIVE BORDER SCALE IS IN INCHES 0 1 2 3
UNIT 0381
PROJECT NUMBER & PHASE 03000002241

Dist	COUNTY	ROUTE	POST MILES TOTAL PROJECT	SHEET No.	TOTAL SHEETS
03	ED	89	13.8/18.0	142	164

JEFFREY L. PIETRZAK
LICENSED LANDSCAPE ARCHITECT

6-16-14
PLANS APPROVAL DATE

LICENSED LANDSCAPE ARCHITECT
JEFF L. PIETRZAK NO. 4057
Signature
12-13-15
Renewal Date
6-10-14
Date
STATE OF CALIFORNIA

THE STATE OF CALIFORNIA OR ITS OFFICERS OR AGENTS SHALL NOT BE RESPONSIBLE FOR THE ACCURACY OR COMPLETENESS OF SCANNED COPIES OF THIS PLAN SHEET.

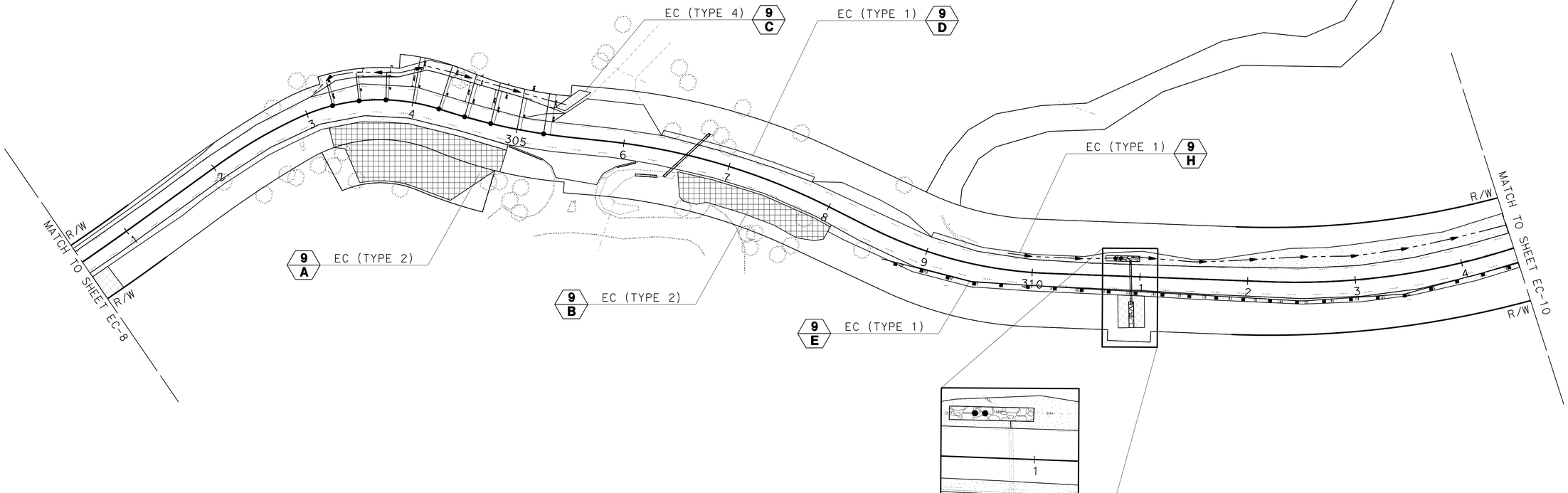

NOTE:
FOR ACCURATE RIGHT OF WAY DATA, CONTACT RIGHT OF WAY ENGINEERING AT THE DISTRICT OFFICE.

APPROVED FOR EROSION CONTROL WORK ONLY

EROSION CONTROL PLAN

SCALE 1" = 50'

EC-9

REVISED BY	DATE REVISED

CALCULATED-DESIGNED BY: J. PIETRZAK
CHECKED BY: J. KURTH

SENIOR LANDSCAPE ARCHITECT: T. CHRIS JOHNSON

STATE OF CALIFORNIA - DEPARTMENT OF TRANSPORTATION
Caltrans® LANDSCAPE ARCHITECTURE

LAST REVISION: DATE PLOTTED => 18-MAR-2015
00-00-00 TIME PLOTTED => 15:10

BORDER LAST REVISED 7/2/2010

USERNAME => s130875
DGN FILE => 0300000224te009.dgn

RELATIVE BORDER SCALE IS IN INCHES 0 1 2 3

UNIT 0381

PROJECT NUMBER & PHASE 03000002241

Dist	COUNTY	ROUTE	POST MILES TOTAL PROJECT	SHEET No.	TOTAL SHEETS
03	ED	89	13.8/18.0	143	164

LICENSED LANDSCAPE ARCHITECT

6-16-14
PLANS APPROVAL DATE

LICENSED LANDSCAPE ARCHITECT
JEFF L. PIETRZAK NO. 4057
Signature
12-13-15
Renewal Date
6-10-14
Date
STATE OF CALIFORNIA

THE STATE OF CALIFORNIA OR ITS OFFICERS OR AGENTS SHALL NOT BE RESPONSIBLE FOR THE ACCURACY OR COMPLETENESS OF SCANNED COPIES OF THIS PLAN SHEET.

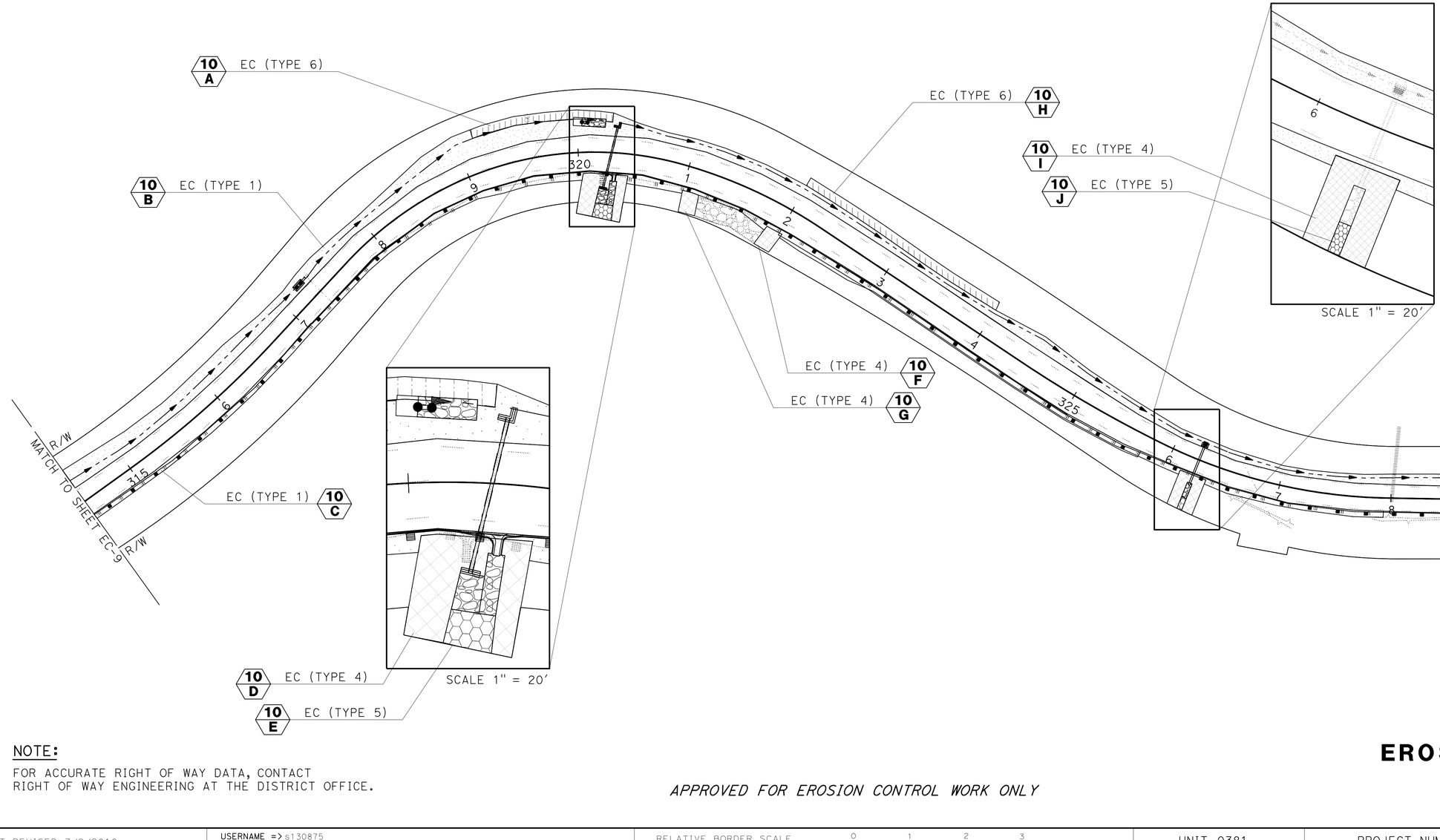

NOTE:

FOR ACCURATE RIGHT OF WAY DATA, CONTACT RIGHT OF WAY ENGINEERING AT THE DISTRICT OFFICE.

APPROVED FOR EROSION CONTROL WORK ONLY

EROSION CONTROL PLAN

SCALE 1" = 50'

EC-10

STATE OF CALIFORNIA - DEPARTMENT OF TRANSPORTATION
Caltrans® LANDSCAPE ARCHITECTURE
SENIOR LANDSCAPE ARCHITECT: T. CHRIS JOHNSON
CALCULATED-DESIGNED BY: J. PIETRZAK
CHECKED BY: J. KURTH
REVISED BY
DATE REVISED

LAST REVISION: DATE PLOTTED => 18-MAR-2015, TIME PLOTTED => 15:10
00-00-00

BORDER LAST REVISED 7/2/2010 | USERNAME => s130875 | DGN FILE => 0300000224te010.dgn | RELATIVE BORDER SCALE IS IN INCHES 0 1 2 3 | UNIT 0381 | PROJECT NUMBER & PHASE 03000002241

Dist	COUNTY	ROUTE	POST MILES TOTAL PROJECT	SHEET No.	TOTAL SHEETS
03	ED	89	13.8/18.0	144	164

LICENSED LANDSCAPE ARCHITECT

6-16-14
PLANS APPROVAL DATE

JEFF L. PIETRZAK No. 4057 — LICENSED LANDSCAPE ARCHITECT — Signature — 12-13-15 Renewal Date — 6-10-14 Date — STATE OF CALIFORNIA

THE STATE OF CALIFORNIA OR ITS OFFICERS OR AGENTS SHALL NOT BE RESPONSIBLE FOR THE ACCURACY OR COMPLETENESS OF SCANNED COPIES OF THIS PLAN SHEET.

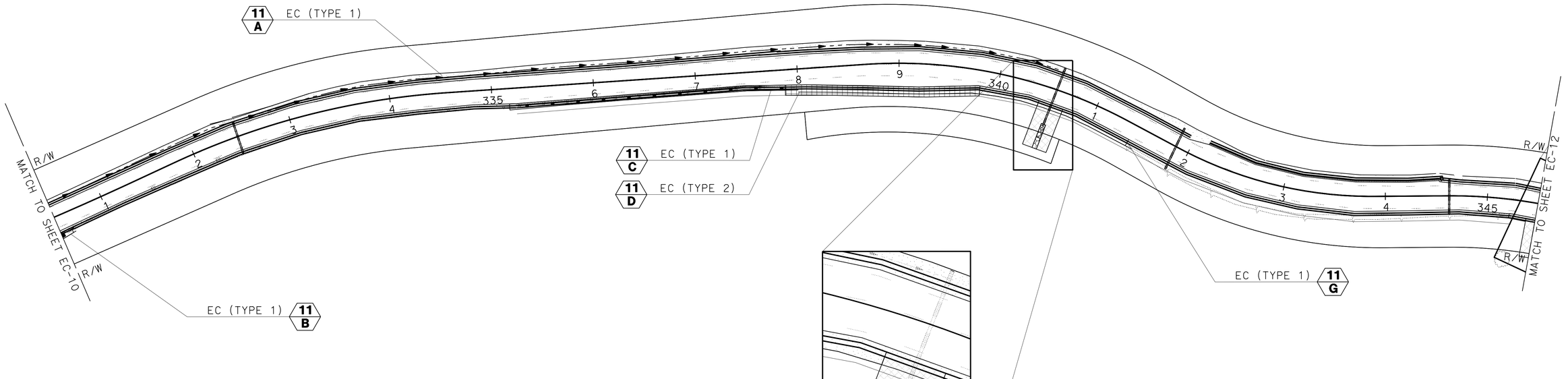

NOTE:

FOR ACCURATE RIGHT OF WAY DATA, CONTACT RIGHT OF WAY ENGINEERING AT THE DISTRICT OFFICE.

APPROVED FOR EROSION CONTROL WORK ONLY

EROSION CONTROL PLAN

SCALE 1" = 50'

EC-11

STATE OF CALIFORNIA - DEPARTMENT OF TRANSPORTATION
Caltrans® LANDSCAPE ARCHITECTURE
SENIOR LANDSCAPE ARCHITECT: T. CHRIS JOHNSON
CALCULATED-DESIGNED BY: J. PIETRZAK
CHECKED BY: J. KURTH
REVISED BY
DATE REVISED

LAST REVISION 00-00-00
DATE PLOTTED => 18-MAR-2015
TIME PLOTTED => 15:10

BORDER LAST REVISED 7/2/2010
USERNAME => s130875
DGN FILE => 0300000224te011.dgn
RELATIVE BORDER SCALE IS IN INCHES 0 1 2 3
UNIT 0381
PROJECT NUMBER & PHASE 03000002241

Dist	COUNTY	ROUTE	POST MILES TOTAL PROJECT	SHEET No.	TOTAL SHEETS
03	ED	89	13.8/18.0	145	164

JEFFREY L. PIETRZAK
LICENSED LANDSCAPE ARCHITECT

6-16-14
PLANS APPROVAL DATE

LICENSED LANDSCAPE ARCHITECT — JEFF L. PIETRZAK NO. 4057 — Signature — 12-13-15 Renewal Date — 6-10-14 Date — STATE OF CALIFORNIA

THE STATE OF CALIFORNIA OR ITS OFFICERS OR AGENTS SHALL NOT BE RESPONSIBLE FOR THE ACCURACY OR COMPLETENESS OF SCANNED COPIES OF THIS PLAN SHEET.

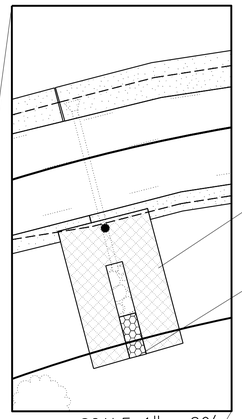

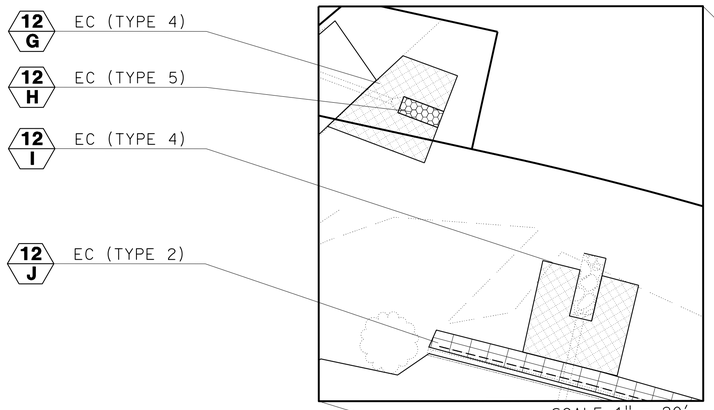

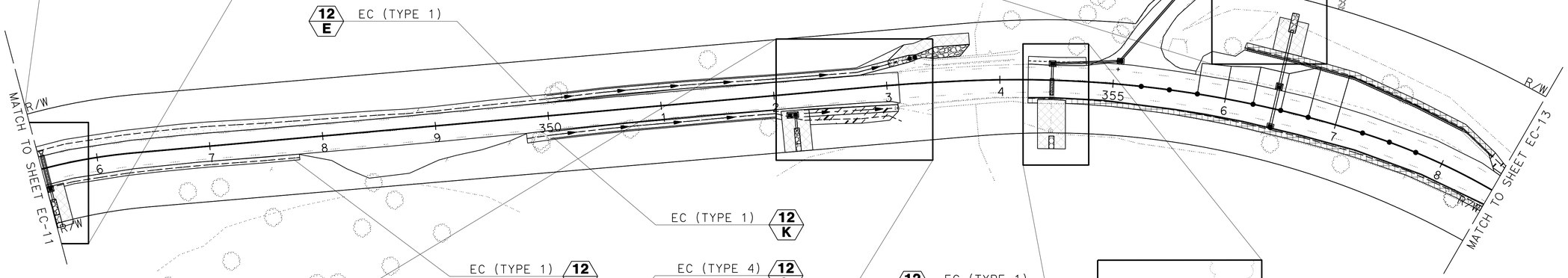

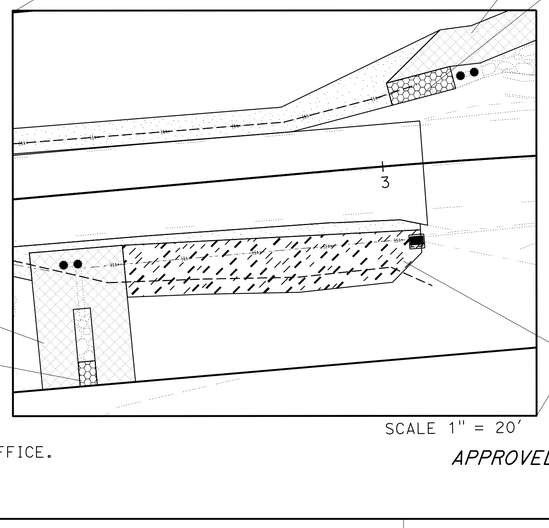

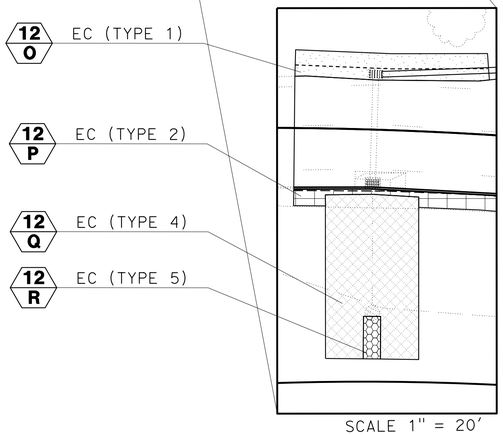

NOTE:
FOR ACCURATE RIGHT OF WAY DATA, CONTACT RIGHT OF WAY ENGINEERING AT THE DISTRICT OFFICE.

APPROVED FOR EROSION CONTROL WORK ONLY

EROSION CONTROL PLAN

SCALE 1" = 50'

EC-12

STATE OF CALIFORNIA - DEPARTMENT OF TRANSPORTATION
LANDSCAPE ARCHITECTURE
SENIOR LANDSCAPE ARCHITECT: T. CHRIS JOHNSON
CALCULATED-DESIGNED BY: J. PIETRZAK
CHECKED BY: J. KURTH
REVISED BY
DATE REVISED
LAST REVISION
DATE PLOTTED => 18-MAR-2015
TIME PLOTTED => 15:10
00-00-00

BORDER LAST REVISED 7/2/2010 | USERNAME => s130875 | DGN FILE => 0300000224te012.dgn | RELATIVE BORDER SCALE IS IN INCHES 0 1 2 3 | UNIT 0381 | PROJECT NUMBER & PHASE 03000002241

Dist	COUNTY	ROUTE	POST MILES TOTAL PROJECT	SHEET No.	TOTAL SHEETS
03	ED	89	13.8/18.0	146	164

LICENSED LANDSCAPE ARCHITECT

6-16-14
PLANS APPROVAL DATE

LICENSED LANDSCAPE ARCHITECT
JEFF L. PIETRZAK NO. 4057
Signature
12-13-15
Renewal Date
6-10-14
Date
STATE OF CALIFORNIA

THE STATE OF CALIFORNIA OR ITS OFFICERS OR AGENTS SHALL NOT BE RESPONSIBLE FOR THE ACCURACY OR COMPLETENESS OF SCANNED COPIES OF THIS PLAN SHEET.

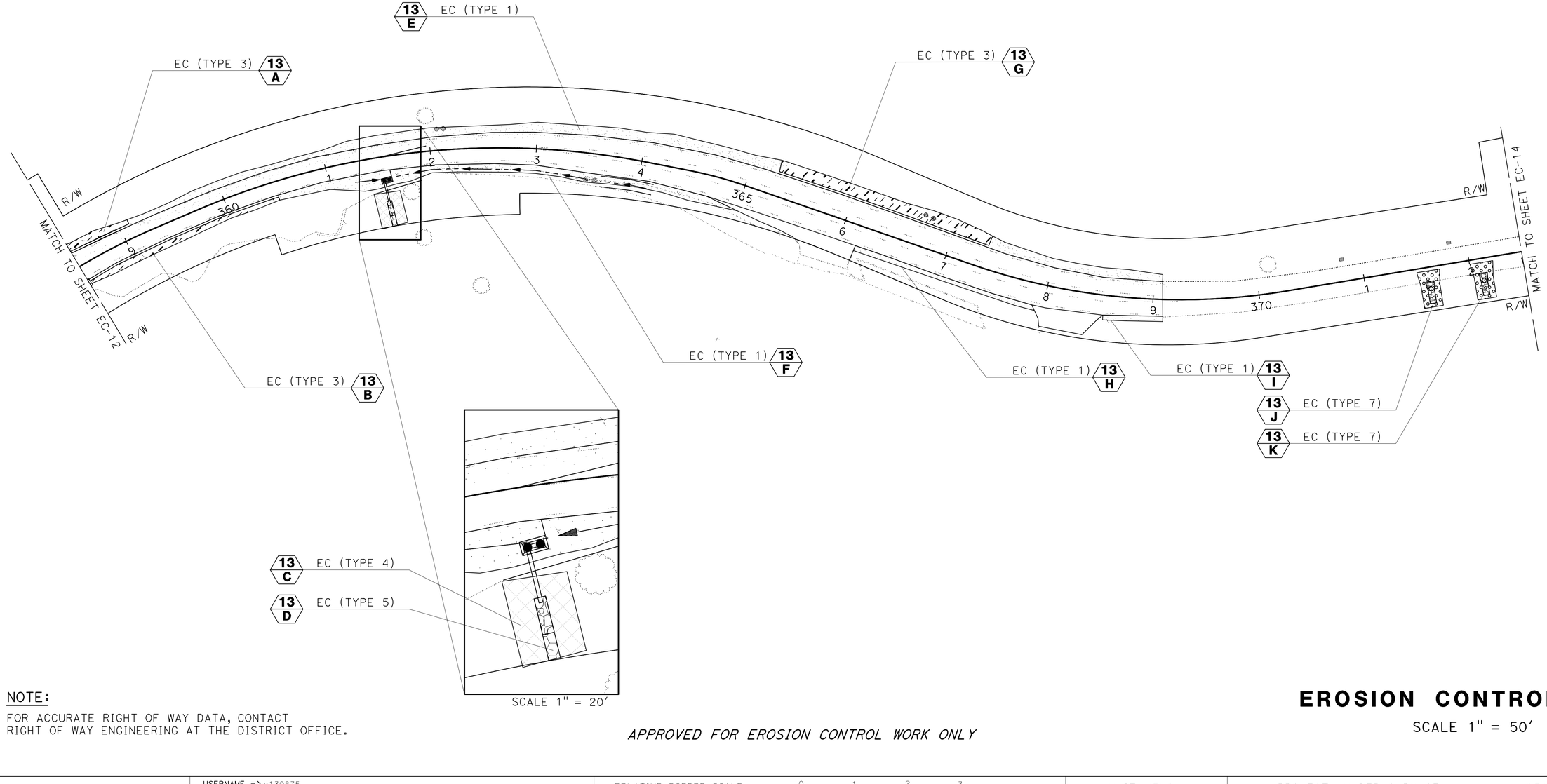

NOTE:

FOR ACCURATE RIGHT OF WAY DATA, CONTACT RIGHT OF WAY ENGINEERING AT THE DISTRICT OFFICE.

APPROVED FOR EROSION CONTROL WORK ONLY

EROSION CONTROL PLAN

SCALE 1" = 50'

EC-13

STATE OF CALIFORNIA - DEPARTMENT OF TRANSPORTATION
LANDSCAPE ARCHITECTURE
SENIOR LANDSCAPE ARCHITECT: T. CHRIS JOHNSON
CHECKED BY: J. KURTH
CALCULATED-DESIGNED BY: J. PIETRZAK
REVISED BY / DATE REVISED

LAST REVISION
DATE PLOTTED => 18-MAR-2015
TIME PLOTTED => 15:10
00-00-00

BORDER LAST REVISED 7/2/2010
USERNAME => s130875
DGN FILE => 0300000224te013.dgn
RELATIVE BORDER SCALE IS IN INCHES 0 1 2 3
UNIT 0381
PROJECT NUMBER & PHASE 03000002241

Dist	COUNTY	ROUTE	POST MILES TOTAL PROJECT	SHEET No.	TOTAL SHEETS
03	ED	89	13.8/18.0	147	164

LICENSED LANDSCAPE ARCHITECT

6-16-14
PLANS APPROVAL DATE

THE STATE OF CALIFORNIA OR ITS OFFICERS OR AGENTS SHALL NOT BE RESPONSIBLE FOR THE ACCURACY OR COMPLETENESS OF SCANNED COPIES OF THIS PLAN SHEET.

LICENSED LANDSCAPE ARCHITECT
JEFF L. PIETRZAK NO. 4057
Signature
12-13-15
Renewal Date
6-10-14
Date
STATE OF CALIFORNIA

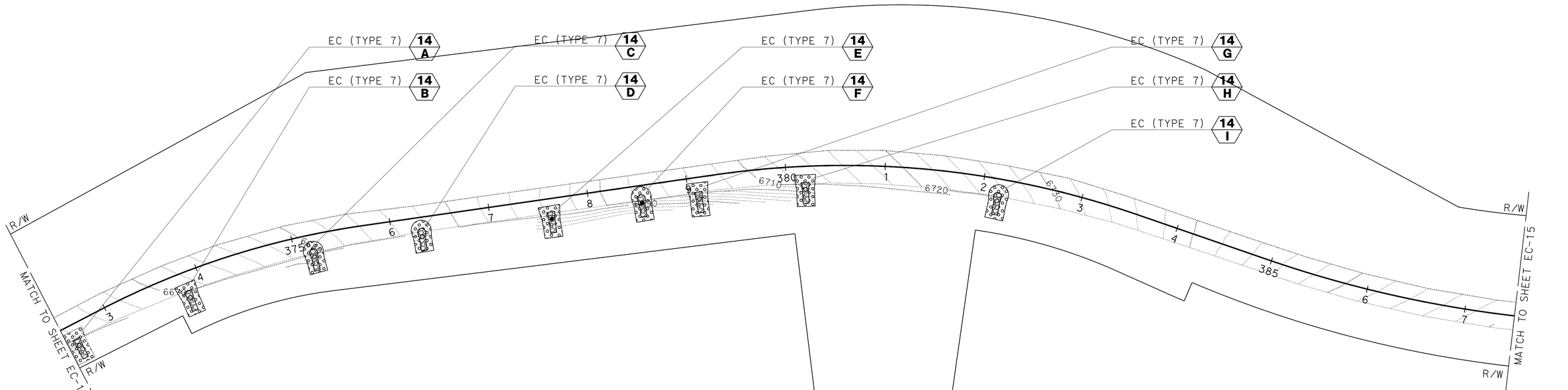

NOTE:

FOR ACCURATE RIGHT OF WAY DATA, CONTACT RIGHT OF WAY ENGINEERING AT THE DISTRICT OFFICE.

APPROVED FOR EROSION CONTROL WORK ONLY

EROSION CONTROL PLAN

SCALE 1" = 50'

EC-14

STATE OF CALIFORNIA - DEPARTMENT OF TRANSPORTATION
LANDSCAPE ARCHITECTURE
SENIOR LANDSCAPE ARCHITECT: T. CHRIS JOHNSON
CALCULATED-DESIGNED BY: J. PIETRZAK
CHECKED BY: J. KURTH
REVISED BY
DATE REVISED

LAST REVISION DATE PLOTTED => 18-MAR-2015
TIME PLOTTED => 15:10
00-00-00

BORDER LAST REVISED 7/2/2010
USERNAME => s130875
DGN FILE => 0300000224te014.dgn
RELATIVE BORDER SCALE IS IN INCHES 0 1 2 3
UNIT 0381
PROJECT NUMBER & PHASE 03000002241

Dist	COUNTY	ROUTE	POST MILES TOTAL PROJECT	SHEET No.	TOTAL SHEETS
03	ED	89	13.8/18.0	148	164

JEFFREY L. PIETRZAK
LICENSED LANDSCAPE ARCHITECT

6-16-14
PLANS APPROVAL DATE

LICENSED LANDSCAPE ARCHITECT
JEFF L. PIETRZAK No. 4057
Signature
12-13-15
Renewal Date
6-10-14
Date
STATE OF CALIFORNIA

THE STATE OF CALIFORNIA OR ITS OFFICERS OR AGENTS SHALL NOT BE RESPONSIBLE FOR THE ACCURACY OR COMPLETENESS OF SCANNED COPIES OF THIS PLAN SHEET.

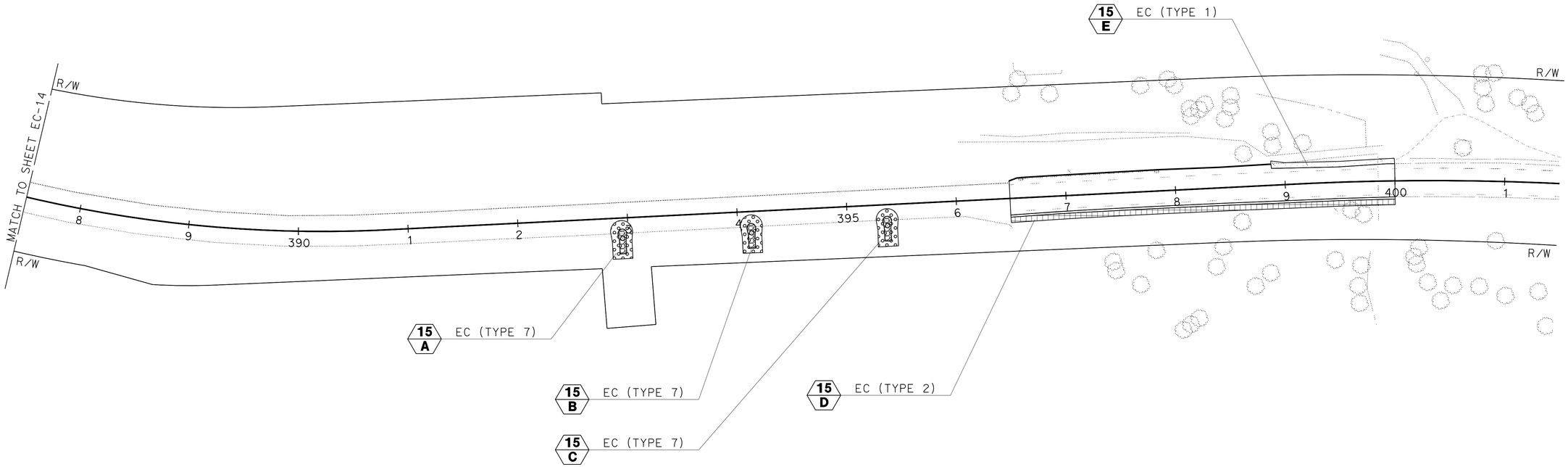

NOTE:
FOR ACCURATE RIGHT OF WAY DATA, CONTACT RIGHT OF WAY ENGINEERING AT THE DISTRICT OFFICE.

APPROVED FOR EROSION CONTROL WORK ONLY

EROSION CONTROL PLAN

SCALE 1" = 50'

EC-15

CALCULATED-DESIGNED BY	REVISED BY
CHECKED BY	DATE REVISED
J. PIETRZAK	
J. KURTH	

SENIOR LANDSCAPE ARCHITECT
T. CHRIS JOHNSON

STATE OF CALIFORNIA - DEPARTMENT OF TRANSPORTATION
Caltrans® LANDSCAPE ARCHITECTURE

LAST REVISION
DATE PLOTTED => 18-MAR-2015
TIME PLOTTED => 15:10
00-00-00

Dist	COUNTY	ROUTE	POST MILES TOTAL PROJECT	SHEET No.	TOTAL SHEETS
03	ED	89	13.8/18.0	149	164

LICENSED LANDSCAPE ARCHITECT

6-16-14
PLANS APPROVAL DATE

LICENSED LANDSCAPE ARCHITECT — JEFF L. PIETRZAK NO. 4503 — Signature — 12-13-15 Renewal Date — 6-10-14 Date — STATE OF CALIFORNIA

THE STATE OF CALIFORNIA OR ITS OFFICERS OR AGENTS SHALL NOT BE RESPONSIBLE FOR THE ACCURACY OR COMPLETENESS OF SCANNED COPIES OF THIS PLAN SHEET.

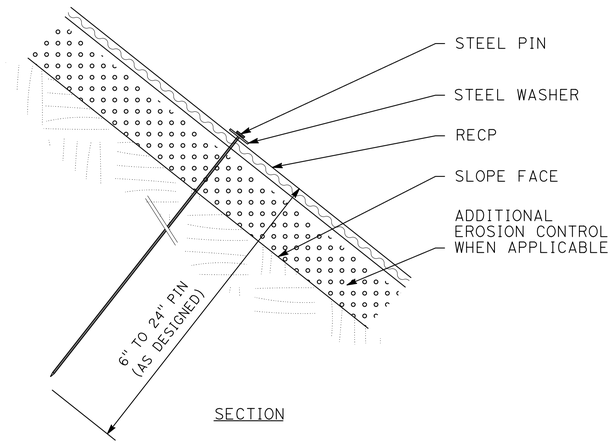

FASTENER (STEEL PIN)

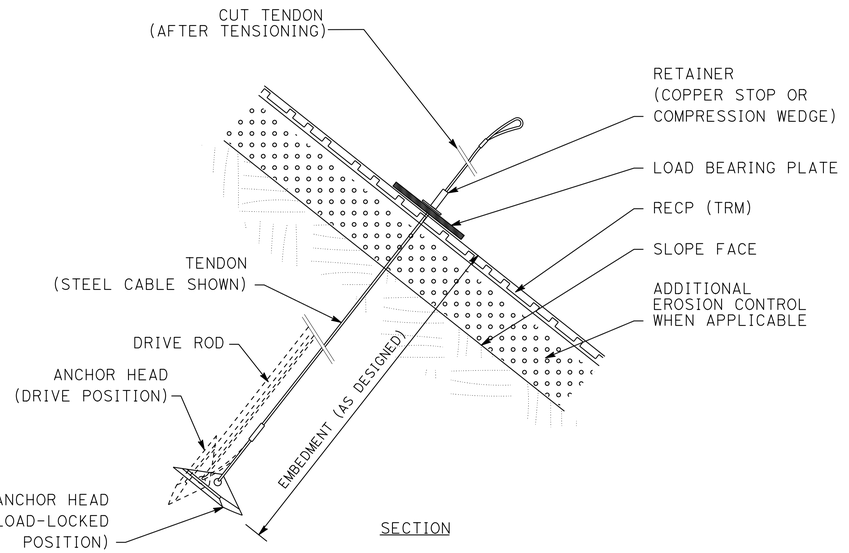

FASTENER (EARTH ANCHOR)

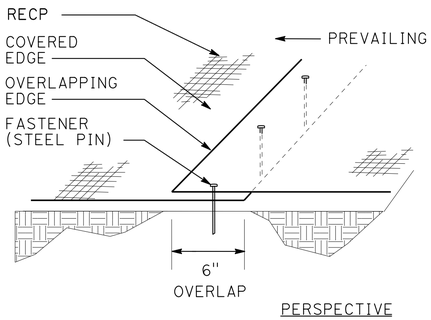

DETAIL A
CONTROL PRODUCT JOINT

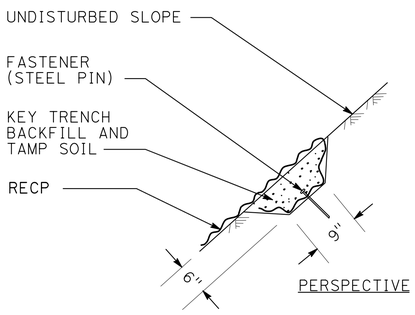

DETAIL B
KEY TRENCH AT UPPER CONFORM

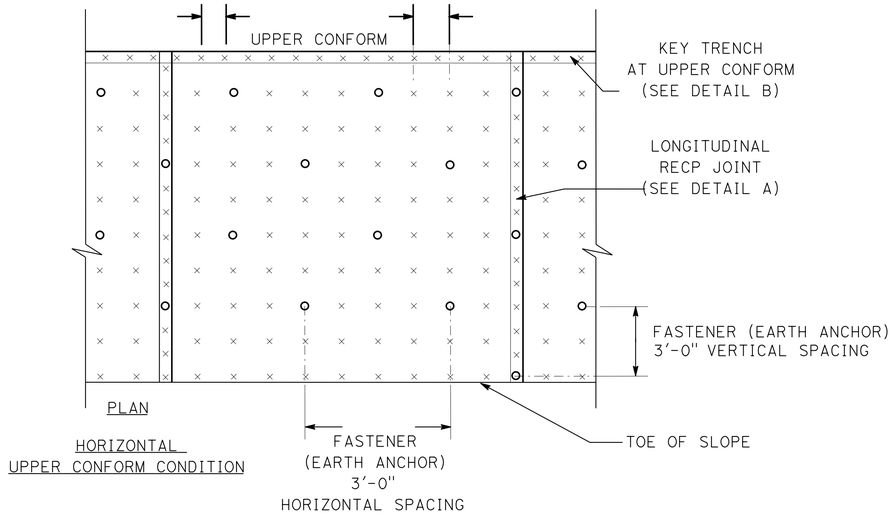

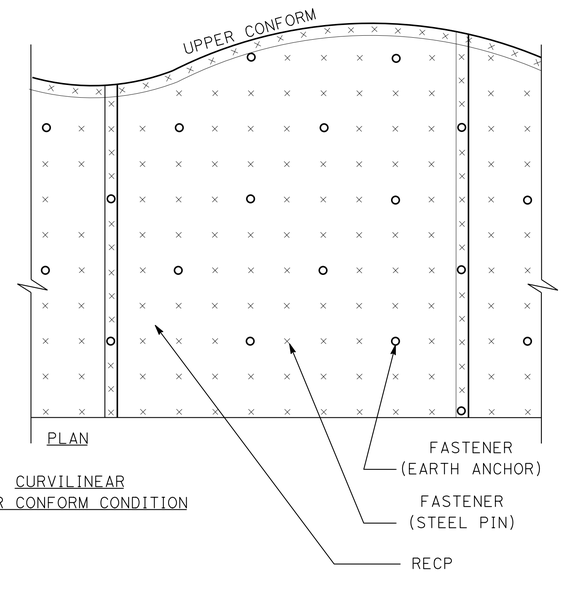

RECP (TRM)-TYPE D

EROSION CONTROL DETAILS
ECD-1

STATE OF CALIFORNIA - DEPARTMENT OF TRANSPORTATION
LANDSCAPE ARCHITECTURE
SENIOR LANDSCAPE ARCHITECT: T. CHRIS JOHNSON
CALCULATED-DESIGNED BY: J. PIETRZAK
CHECKED BY: J. KURTH
REVISED BY | DATE REVISED

LAST REVISION | DATE PLOTTED => 18-MAR-2015 | TIME PLOTTED => 15:10
00-00-00

BORDER LAST REVISED 7/2/2010 | USERNAME => s130875 | DGN FILE => 0300000224tf001.dgn | RELATIVE BORDER SCALE IS IN INCHES 0 1 2 3 | UNIT 0381 | PROJECT NUMBER & PHASE 03000002241

Dist	COUNTY	ROUTE	POST MILES TOTAL PROJECT	SHEET No.	TOTAL SHEETS
03	ED	89	13.8/18.0	150	164

LICENSED LANDSCAPE ARCHITECT

6-16-14
PLANS APPROVAL DATE

THE STATE OF CALIFORNIA OR ITS OFFICERS OR AGENTS SHALL NOT BE RESPONSIBLE FOR THE ACCURACY OR COMPLETENESS OF SCANNED COPIES OF THIS PLAN SHEET.

LICENSED LANDSCAPE ARCHITECT
JEFF L. PIETRZAK, No. 4507
Signature
12-13-15
Renewal Date
6-10-14
Date
STATE OF CALIFORNIA

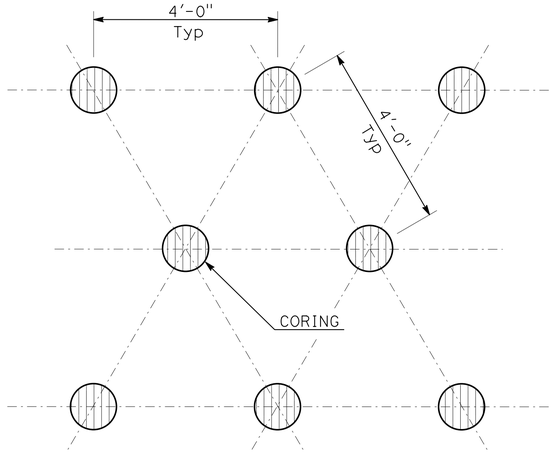

PLAN

CORING PATTERN
DETAIL A

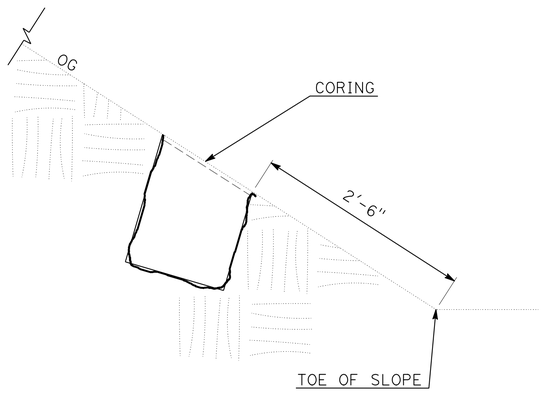

SECTION

CORING AT TOE OF SLOPE
DETAIL B

NOTE:
FOR FASTENER PATTERN
SEE ECD-1

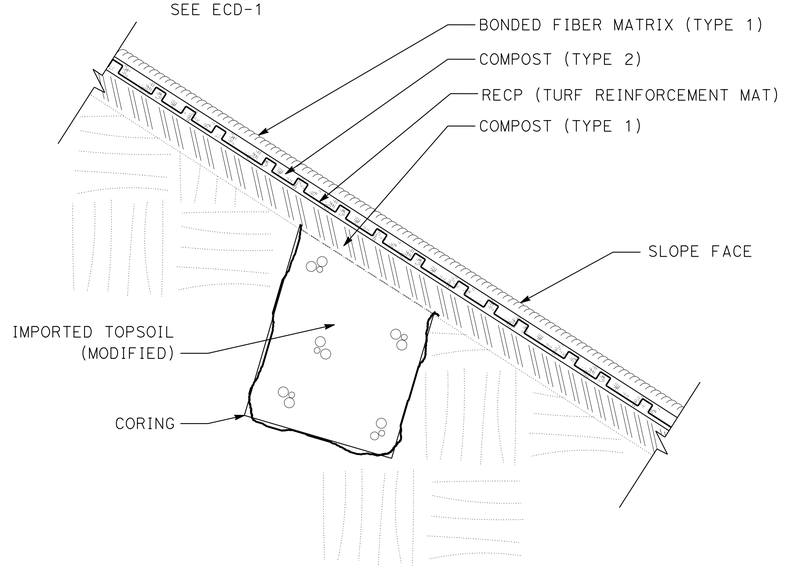

SECTION

EROSION CONTROL (TYPE 6)
DETAIL C

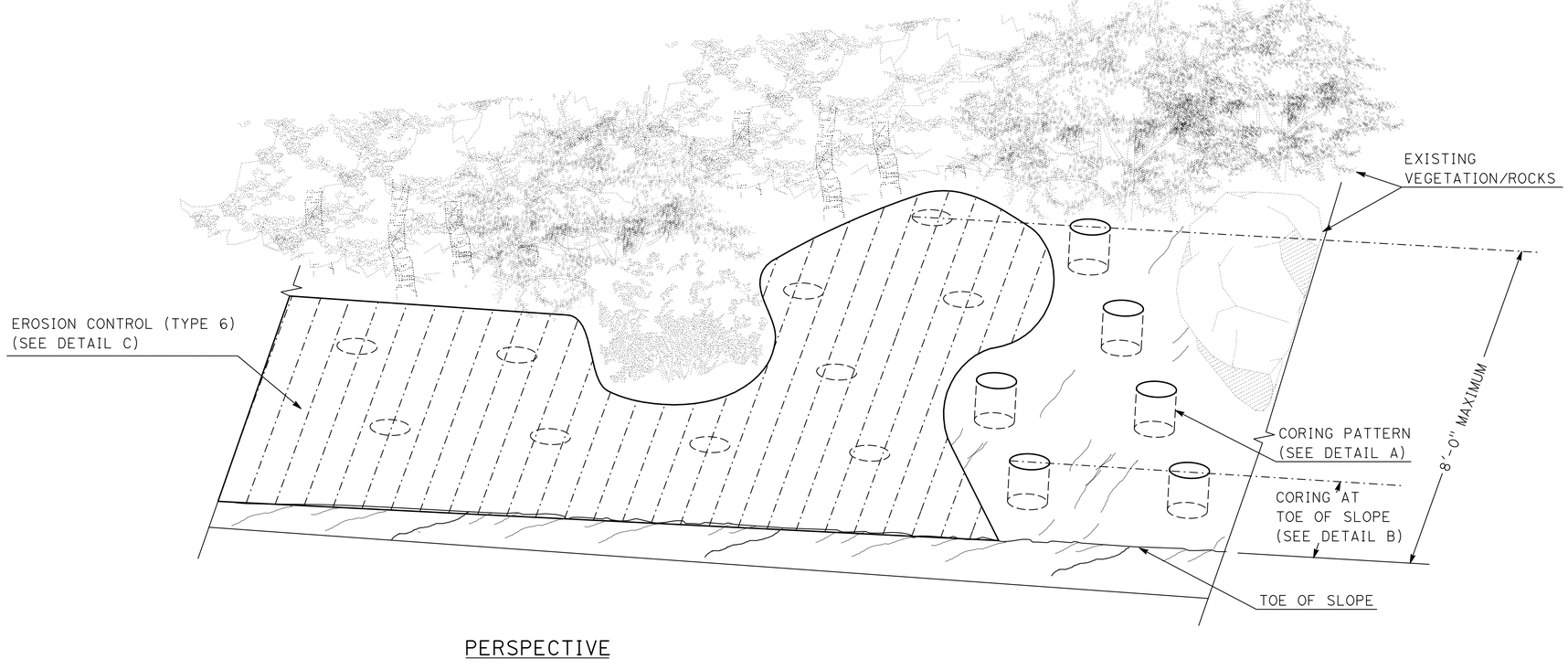

PERSPECTIVE

EROSION CONTROL (TYPE 6) TYPICAL DETAIL

EROSION CONTROL DETAILS

ECD-2

STATE OF CALIFORNIA - DEPARTMENT OF TRANSPORTATION
Caltrans® LANDSCAPE ARCHITECTURE
SENIOR LANDSCAPE ARCHITECT: T. CHRIS JOHNSON
CALCULATED-DESIGNED BY
CHECKED BY: J. KURTH
REVISED BY: J. PIETRZAK
DATE REVISED

LAST REVISION: DATE PLOTTED => 18-MAR-2015
00-00-00 TIME PLOTTED => 15:10

BORDER LAST REVISED 7/2/2010 | USERNAME => s130875 | DGN FILE => 0300000224tf002.dgn | RELATIVE BORDER SCALE IS IN INCHES 0 1 2 3 | UNIT 0381 | PROJECT NUMBER & PHASE 03000002241

Dist	COUNTY	ROUTE	POST MILES TOTAL PROJECT	SHEET No.	TOTAL SHEETS
03	ED	89	13.8/18.0	151	164

JEFFREY L. PIETRZAK
LICENSED LANDSCAPE ARCHITECT

6-16-14
PLANS APPROVAL DATE

LICENSED LANDSCAPE ARCHITECT
JEFF L. PIETRZAK No. 4057
Signature
12-13-15
Renewal date
6-10-14
Date
STATE OF CALIFORNIA

THE STATE OF CALIFORNIA OR ITS OFFICERS OR AGENTS SHALL NOT BE RESPONSIBLE FOR THE ACCURACY OR COMPLETENESS OF SCANNED COPIES OF THIS PLAN SHEET.

EROSION CONTROL QUANTITIES TABLE 1

EC SHEET	LOCATION	(N) EROSION CONTROL TYPE	CORING	IMPORTED TOPSOIL (MODIFIED)	COMPOST (TYPE 1)	INCORPORATE MATERIALS	ROLLED EROSION CONTROL PRODUCT (TRM)	ROLLED EROSION CONTROL PRODUCT (TRM) TYPE D	COMPOST (TYPE 2)	BONDED FIBER MATRIX (TYPE 1)	BONDED FIBER MATRIX (TYPE 2)	STRAW	ROLLED EROSION CONTROL PRODUCT (NETTING)
			EA	CY	SQFT	SQFT	SQFT	SQFT	SQFT	SQFT	SQFT	SQFT	SQFT
1	A	3	--	--	9	752	--	--	--	752	--	--	--
1	B	1	--	~~68~~	--	--	--	--	--	636	--	--	--
1	C	4	--	--	--	--	976	--	3	976	--	--	--
1	D	5	--	~~62~~	1	51	51	--	--	--	51	51	51
1	E	6	782	10	16	--	--	2688	--	2688	--	--	--
1	F	1	--	--	--	--	--	--	--	4104	--	--	--
1	G	6	713		15	--	--	2452	--	2452	--	--	--
1	H	6	119		2	--	--	408	--	408	--	--	--
1	I	3	--	~~42~~	4	304	--	--	--	304	--	--	--
1	J	3	--	~~28~~	2	196	--	--	--	196	--	--	--
1	K	1	--	--	--	--	--	--	--	5435	--	--	--
1	L	6	482	98	10	--	--	1659	--	1659	--	--	--
2	A	6	317	14	6	--	--	1089	--	1089	--	--	--
2	B	1	--	~~7~~	--	--	--	--	--	4539	--	--	--
2	C	6	1122		23	--	--	3860	--	3860	--	--	--
2	D	6	158		3	--	--	545	--	545	--	--	--
2	E	6	85		2	--	--	293	--	293	--	--	--
2	F	3	--	--	8	668	--	--	--	668	--	--	--
2	G	1	--	--	--	--	--	--	--	6665	--	--	--
2	H	4	--	--	--	--	433	--	1	433	--	--	--
2	I	5	--	--	1	51	51	--	--	--	51	51	51
3	A	1	--	--	--	--	--	--	--	335	--	--	--
3	B	1	--	--	--	--	--	--	--	2755	--	--	--
3	C	4	--	--	--	--	705	--	2	705	--	--	--
3	D	5	--	--	--	32	32	--	--	--	32	32	32
3	E	4	--	--	--	--	502	--	2	502	--	--	--
3	F	4	--	--	--	--	745	--	2	745	--	--	--
3	G	5	--	--	1	51	51	--	--	--	51	51	51
3	H	5	--	--	1	49	49	--	--	--	49	49	49
3	I	4	--	--	--	--	692	--	2	692	--	--	--
3	J	4	--	--	--	--	199	--	1	199	--	--	--
4	A	2	--	--	52	6224	--	--	--	6224	--	6224	6224
4	B	1	--	--	--	--	--	--	--	172	--	--	--
4	C	6	120	10	2	--	--	412	--	412	--	--	--
4	D	3	--	--	9	731	--	--	--	731	--	--	--
4	E	3	--	--	25	2001	--	--	--	2001	--	--	--
4	F	3	--	--	8	642	--	--	--	642	--	--	--
4	G	5	--	--	1	61	61	--	--	--	61	61	61
4	H	2	--	--	52	4253	--	--	--	4253	--	4253	4253
4	I	1	--	--	--	--	--	--	--	4988	--	--	--
4	J	5	--	--	15	1048	1048	--	4	--	1048	1048	1048
4	K	5	--	--	3	264	264	--	1	--	264	264	264
4	L	3	--	--	11	912	--	--	--	912	--	--	--
4	M	1	--	--	--	--	--	--	--	3102	--	--	--
5	A	1	--	--	--	--	--	--	--	5984	--	--	--
5	B	1	--	--	--	--	--	--	--	4888	--	--	--
SUBTOTAL TABLE 1			3,898	339	319	18,290	5,859	13,406	27	77,944	1,607	12,084	12,084

(N) NON PAY ITEM, INFORMATION ONLY

REVISED BY	DATE REVISED

CALCULATED-DESIGNED BY	CHECKED BY
J. PIETRZAK	J. KURTH

SENIOR LANDSCAPE ARCHITECT
T. CHRIS JOHNSON

STATE OF CALIFORNIA - DEPARTMENT OF TRANSPORTATION
Caltrans® LANDSCAPE ARCHITECTURE

EROSION CONTROL QUANTITIES

ECQ-1

LAST REVISION 00-00-00
DATE PLOTTED => 18-MAR-2015
TIME PLOTTED => 15:10

EROSION CONTROL QUANTITIES TABLE 2

EC SHEET	LOCATION	(N) EROSION CONTROL TYPE	CORING	IMPORTED TOPSOIL (MODIFIED)	COMPOST (TYPE 1)	INCORPORATE MATERIALS	ROLLED EROSION CONTROL PRODUCT (TRM)	ROLLED EROSION CONTROL PRODUCT (TRM) TYPE D	COMPOST (TYPE 2)	BONDED FIBER MATRIX (TYPE 1)	BONDED FIBER MATRIX (TYPE 2)	STRAW	ROLLED EROSION CONTROL PRODUCT (NETTING)
			EA	CY	SQFT	SQFT	SQFT	SQFT	SQFT	SQFT	SQFT	SQFT	SQFT
6	A	4	--	--	--	--	722	--	2	722	--	--	--
6	B	5	--	--	1	80	80	--	--	--	80	80	80
6	C	1	--	--	--	--	--	--	--	1818	--	--	--
6	D	3	--	--	8	657	--	--	--	657	--	--	--
6	E	1	--	--	--	--	--	--	--	2100	--	--	--
6	F	4	--	--	--	--	301	--	1	301	--	--	--
6	G	5	--	--	11	908	908	--	3	--	908	908	908
6	H	4	--	--	--	--	999	--	3	999	--	--	--
6	I	4	--	--	--	--	608	--	2	608	--	--	--
6	J	3	--	--	18	1464	--	--	--	1464	--	--	--
6	K	1	--	--	--	--	--	--	--	695	--	--	--
6	L	1	--	--	--	--	--	--	--	3233	--	--	--
6	M	1	--	--	--	--	--	--	--	3050	--	--	--
6	N	3	--	--	10	803	--	--	--	803	--	--	--
6	O	1	--	--	--	--	--	--	--	1674	--	--	--
6	P	1	--	--	--	--	--	--	--	556	--	--	--
6	Q	1	--	--	--	--	--	--	--	1574	--	--	--
6	R	5	--	--	2	175	175	--	1	--	175	175	175
6	S	4	--	--	--	--	1275	--	4	1275	--	--	--
6	T	1	--	--	--	--	--	--	--	1203	--	--	--
7	A	1	--	--	--	--	--	--	--	4857	--	--	--
7	B	1	--	--	--	--	--	--	--	4124	--	--	--
7	C	3	--	--	10	840	--	--	--	840	--	--	--
7	D	3	--	--	5	379	--	--	--	379	--	--	--
7	E	4	--	--	--	--	826	--	3	826	--	--	--
7	F	4	--	--	--	--	792	--	2	792	--	--	--
7	G	1	--	--	--	--	--	--	--	2083	--	--	--
8	A	5	--	--	1	72	72	--	--	--	72	72	72
8	B	4	--	--	--	--	2071	--	6	2071	--	--	--
8	C	1	--	--	--	--	--	--	--	6125	--	--	--
8	D	4	--	--	--	--	14086	--	44	14086	--	--	--
8	E	3	--	--	32	2559	--	--	--	2559	--	--	--
8	F	1	--	--	--	--	--	--	--	1390	--	--	--
8	G	1	--	--	--	--	--	--	--	1285	--	--	--
9	A	2	--	--	107	8668	--	--	--	8668	--	8668	8668
9	B	2	--	--	40	3240	--	--	--	3240	--	3240	3240
9	C	4	--	--	--	--	228	--	1	228	--	--	--
9	D	1	--	--	--	--	--	--	--	731	--	--	--
9	E	1	--	--	--	--	--	--	--	3352	--	--	--
9	F	4	--	--	--	--	640	--	2	640	--	--	--
9	G	5	--	--	1	46	46	--	--	--	46	46	46
9	H	1	--	--	--	--	--	--	--	4693	--	--	--
10	A	6	326	28	7	--	--	1122	--	1122	--	--	--
10	B	1	--	--	--	--	--	--	--	15855	--	--	--
10	C	1	--	--	--	--	--	--	--	6792	--	--	--
10	D	4	--	--	--	--	1169	--	5	1169	--	--	--
10	E	5	--	--	1	222	222	--	--	--	222	222	222
10	F	4	--	--	--	--	334	--	1	334	--	--	--
10	G	4	--	--	--	--	326	--	1	326	--	--	--
10	H	6	529	46	11	--	--	1818	--	1818	--	--	--
10	I	4	--	--	--	--	781	--	2	781	--	--	--
10	J	5	--	--	1	58	58	--	--	--	58	58	58
10	K	1	--	--	--	--	--	--	--	329	--	--	--
SUBTOTAL TABLE 2			855	74	268	20,171	26,719	2,940	87	114,227	1,561	13,469	13,469

(N) NON PAY ITEM, INFORMATION ONLY

Dist	COUNTY	ROUTE	POST MILES TOTAL PROJECT	SHEET No.	TOTAL SHEETS
03	ED	89	13.8/18.0	152	164

LICENSED LANDSCAPE ARCHITECT

6-16-14
PLANS APPROVAL DATE

LICENSED LANDSCAPE ARCHITECT
JEFF L. PIETRZAK, No. 4557
Signature
12-13-15
Renewal Date
6-10-14
Date
STATE OF CALIFORNIA

THE STATE OF CALIFORNIA OR ITS OFFICERS OR AGENTS SHALL NOT BE RESPONSIBLE FOR THE ACCURACY OR COMPLETENESS OF SCANNED COPIES OF THIS PLAN SHEET.

REVISED BY | DATE REVISED

CALCULATED-DESIGNED BY: J. PIETRZAK
CHECKED BY: J. KURTH

SENIOR LANDSCAPE ARCHITECT: T. CHRIS JOHNSON

STATE OF CALIFORNIA - DEPARTMENT OF TRANSPORTATION
Caltrans® LANDSCAPE ARCHITECTURE

LAST REVISION: DATE PLOTTED => 18-MAR-2015
TIME PLOTTED => 15:10
00-00-00

EROSION CONTROL QUANTITIES
ECQ-2

BORDER LAST REVISED 7/2/2010 | USERNAME => s130875 | DGN FILE => 0300000224tg002.dgn | RELATIVE BORDER SCALE IS IN INCHES 0 1 2 3 | UNIT 0381 | PROJECT NUMBER & PHASE 03000002241

EROSION CONTROL QUANTITIES TABLE 3

EC SHEET	LOCATION	(N) EROSION CONTROL TYPE	CORING	IMPORTED TOPSOIL (MODIFIED)	COMPOST (TYPE 1)	INCORPORATE MATERIALS	ROLLED EROSION CONTROL PRODUCT (TRM)	ROLLED EROSION CONTROL PRODUCT (TRM) TYPE D	COMPOST (TYPE 2)	BONDED FIBER MATRIX (TYPE 1)	BONDED FIBER MATRIX (TYPE 2)	STRAW	ROLLED EROSION CONTROL PRODUCT (NETTING)
			EA	CY	SQFT	SQFT	SQFT	SQFT	SQFT	SQFT	SQFT	SQFT	SQFT
11	A	1	--	--	--	--	--	--	--	13409	--	--	--
11	B	1	--	--	--	--	--	--	--	47	--	--	--
11	C	1	--	--	--	--	--	--	--	1396	--	--	--
11	D	2	--	--	24	1933	--	--	--	1933	--	1933	1933
11	E	4	--	--	--	--	1081	--	3	1081	--	--	--
11	F	5	--	--	1	55	55	--	--	--	55	55	55
11	G	1	--	--	--	--	--	--	--	1003	--	--	--
12	A	4	--	--	--	--	820	--	3	820	--	--	--
12	B	5	--	--	--	31	31	--	--	--	31	31	31
12	C	4	--	--	--	--	872	--	3	872	--	--	--
12	D	5	--	--	1	58	58	--	--	--	58	58	58
12	E	1	--	--	--	--	--	--	--	6152	--	--	--
12	F	1	--	--	--	--	--	--	--	1223	--	--	--
12	G	4	--	--	--	--	485	--	2	485	--	--	--
12	H	5	--	--	1	52	52	--	--	--	52	52	52
12	I	4	--	--	--	--	706	--	2	706	--	--	--
12	J	2	--	--	15	1232	--	--	--	1232	--	1232	1232
12	K	1	--	--	--	--	--	--	--	2054	--	--	--
12	L	4	--	--	--	--	683	--	2	683	--	--	--
12	M	5	--	--	1	68	68	--	--	--	68	68	68
12	N	3	--	--	14	1098	--	--	--	1098	--	--	--
12	O	1	--	--	--	--	--	--	--	367	--	--	--
12	P	2	--	--	24	1972	--	--	--	1972	--	1972	1972
12	Q	4	--	--	--	--	1037	--	3	1037	--	--	--
12	R	5	--	--	1	52	52	--	--	--	52	52	52
13	A	3	--	--	7	554	--	--	--	554	--	--	--
13	B	3	--	--	12	1005	--	--	--	1005	--	--	--
13	C	4	--	--	--	--	691	--	2	691	--	--	--
13	D	5	--	--	1	52	52	--	--	--	52	52	52
13	E	1	--	--	--	--	--	--	--	7258	--	--	--
13	F	1	--	--	--	--	--	--	--	4016	--	--	--
13	G	3	--	--	30	2450	--	--	--	2450	--	--	--
13	H	1	--	--	--	--	--	--	--	794	--	--	--
13	I	1	--	--	--	--	--	--	--	284	--	--	--
13	J	7	--	--	3	--	--	--	--	422	--	--	--
13	K	7	--	--	3	--	--	--	--	422	--	--	--
14	A	7	--	--	3	--	--	--	--	614	--	--	--
14	B	7	--	--	3	--	--	--	--	604	--	--	--
14	C	7	--	--	3	--	--	--	--	560	--	--	--
14	D	7	--	--	3	--	--	--	--	560	--	--	--
14	E	7	--	--	3	--	--	--	--	560	--	--	--
14	F	7	--	--	3	--	--	--	--	605	--	--	--
14	G	7	--	--	3	--	--	--	--	630	--	--	--
14	H	7	--	--	3	--	--	--	--	590	--	--	--
14	I	7	--	--	3	--	--	--	--	615	--	--	--
15	A	7	--	--	3	--	--	--	--	612	--	--	--
15	B	7	--	--	3	--	--	--	--	609	--	--	--
15	C	7	--	--	3	--	--	--	--	608	--	--	--
15	D	2	--	--	22	1788	--	--	--	1753	--	1788	1788
15	E	1	--	--	--	--	--	--	--	577	--	--	--
SUBTOTAL TABLE 3			--	--	199	12,646	6,743	--	20	64,963	614	7,539	7,539
SUBTOTAL TABLE 2			855	74	268	20,171	26,719	2,940	87	114,227	1,561	13,469	13,469
SUBTOTAL TABLE 1			3,898	339	319	18,290	5,859	13,406	27	77,944	1,607	12,084	12,084
TOTAL			4,753	413	786	52,366	44,261	16,346	134	254,659	7,066	34,351	34,351

(N) NON PAY ITEM, INFORMATION ONLY

Dist	COUNTY	ROUTE	POST MILES TOTAL PROJECT	SHEET No.	TOTAL SHEETS
03	ED	89	13.8/18.0	153	164

LICENSED LANDSCAPE ARCHITECT

6-16-14
PLANS APPROVAL DATE

LICENSED LANDSCAPE ARCHITECT — JEFF L. PIETRZAK, NO. 4503 — Signature — 12-13-15 Renewal Date — 6-10-14 Date — STATE OF CALIFORNIA

THE STATE OF CALIFORNIA OR ITS OFFICERS OR AGENTS SHALL NOT BE RESPONSIBLE FOR THE ACCURACY OR COMPLETENESS OF SCANNED COPIES OF THIS PLAN SHEET.

EROSION CONTROL QUANTITIES

ECQ-3

STATE OF CALIFORNIA - DEPARTMENT OF TRANSPORTATION
LANDSCAPE ARCHITECTURE
SENIOR LANDSCAPE ARCHITECT: T. CHRIS JOHNSON
CALCULATED-DESIGNED BY
CHECKED BY
J. PIETRZAK
J. KURTH
REVISED BY
DATE REVISED

LAST REVISION 00-00-00
DATE PLOTTED => 18-MAR-2015
TIME PLOTTED => 15:10
BORDER LAST REVISED 7/2/2010
USERNAME => s130875
DGN FILE => 0300000224tg003.dgn
RELATIVE BORDER SCALE IS IN INCHES 0 1 2 3
UNIT 0381
PROJECT NUMBER & PHASE 03000002241

M

Maint	MAINTENANCE
Max	MAXIMUM
MB	METAL BEAM
MBB	METAL BEAM BARRIER
MBGR	METAL BEAM GUARD RAILING
Med	MEDIAN
MGS	MIDWEST GUARDRAIL SYSTEM
MH	MANHOLE
Min	MINIMUM
Misc	MISCELLANEOUS
Misc I & S	MISCELLANEOUS IRON AND STEEL
Mkr	MARKER
Mod	MODIFIED, MODIFY
Mon	MONUMENT
MP	METAL PLATE
MPGR	METAL PLATE GUARD RAILING
MR	MOVEMENT RATING
MSE	MECHANICALLY STABILIZED EMBANKMENT
Mt	MOUNTAIN, MOUNT
Mtl	MATERIAL
MVP	MAINTENANCE VEHICLE PULLOUT

N

N	NORTH
NB	NORTHBOUND
No.	NUMBER (MUST HAVE PERIOD)
Nos.	NUMBERS (MUST HAVE PERIOD)
NPS	NOMINAL PIPE SIZE
NS	NEAR SIDE
NSP	NEW STANDARD PLAN
NTS	NOT TO SCALE

O

Oblr	OBLITERATE
OC	OVERCROSSING
OD	OUTSIDE DIAMETER
OF	OUTSIDE FACE
OG	ORIGINAL GROUND
OGAC	OPEN GRADED ASPHALT CONCRETE
OGFC	OPEN GRADED FRICTION COURSE
OH	OVERHEAD
OHWM	ORDINARY HIGH WATER MARK
O-O	OUT TO OUT
Opp	OPPOSITE
OSD	OVERSIDE DRAIN

P

P	PAGE
PAP	PERFORATED ALUMINUM PIPE
PB	PULL BOX
PC	POINT OF CURVATURE, PRECAST
PCC	POINT OF COMPOUND CURVE, PORTLAND CEMENT CONCRETE
PCMS	PORTABLE CHANGEABLE MESSAGE SIGN
PCP	PERFORATED CONCRETE PIPE, PRESTRESSED CONCRETE PIPE
PCVC	POINT OF COMPOUND VERTICAL CURVE
PEC	PERMIT TO ENTER AND CONSTRUCT
Ped	PEDESTRIAN
Ped OC	PEDESTRIAN OVERCROSSING
Ped UC	PEDESTRIAN UNDERCROSSING
Perm Mtl	PERMEABLE MATERIAL

P continued

PG	PROFILE GRADE
PI	POINT OF INTERSECTION
PJP	PARTIAL JOINT PENETRATION
Pkwy	PARKWAY
℄,PL	PLATE
P/L	PROPERTY LINE
PM	POST MILE, TIME FROM NOON TO MIDNIGHT
PN	PAVING NOTCH
POC	POINT OF HORIZONTAL CURVE
POT	POINT OF TANGENT
POVC	POINT OF VERTICAL CURVE
PP	PIPE PILE, PLASTIC PIPE, POWER POLE
PPL	PREFORMED PERMEABLE LINER
PPP	PERFORATED PLASTIC PIPE
PRC	POINT OF REVERSE CURVE
PRF	PAVEMENT REINFORCING FABRIC
PRVC	POINT OF REVERSE VERTICAL CURVE
PS&E	PLANS, SPECIFICATIONS AND ESTIMATES
PS, P/S	PRESTRESSED
PSP	PERFORATED STEEL PIPE
PT	POINT OF TANGENCY
PVC	POLYVINYL CHLORIDE
Pvmt	PAVEMENT

Q

Qty	QUANTITY

R

R	RADIUS
R & D	REMOVE AND DISPOSE
R & S	REMOVE AND SALVAGE
R/C	RATE OF CHANGE
RCA	REINFORCED CONCRETE ARCH
RCB	REINFORCED CONCRETE BOX
RCP	REINFORCED CONCRETE PIPE
RCPA	REINFORCED CONCRETE PIPE ARCH
Rd	ROAD
Reinf	REINFORCED, REINFORCEMENT, REINFORCING
Rel	RELOCATE
Repl	REPLACEMENT
Ret	RETAINING
Rev	REVISED, REVISION
Rdwy	ROADWAY
RHMA	RUBBERIZED HOT MIX ASPHALT
Riv	RIVER
RM	ROAD-MIXED
RP	RADIUS POINT, REFERENCE POINT
RR	RAILROAD
RSP	ROCK SLOPE PROTECTION, REVISED STANDARD PLAN
Rt	RIGHT
Rte	ROUTE
RW	REDWOOD, RETAINING WALL
R/W	RIGHT OF WAY
Rwy	RAILWAY

S

S	SOUTH, SUPPLEMENT
SAE	STRUCTURE APPROACH EMBANKMENT
Salv	SALVAGE
SAPP	STRUCTURAL ALUMINUM PLATE PIPE
SB	SOUTHBOUND
SC	SAND CUSHION
SCSP	SLOTTED CORRUGATED STEEL PIPE
SD	STORM DRAIN
Sec	SECOND, SECTION
Sep	SEPARATION
SG	SUBGRADE
Shld	SHOULDER
Sht	SHEET
Sim	SIMILAR
℄	STATION LINE
SM	SELECTED MATERIAL
Spec	SPECIAL, SPECIFICATIONS
SPP	SLOTTED PLASTIC PIPE
SS	SLOPE STAKE
SSBM	STRAP AND SADDLE BRACKET METHOD
SSD	STRUCTURAL SECTION DRAIN
SSPA	STRUCTURAL STEEL PLATE ARCH
SSPP	STRUCTURAL STEEL PLATE PIPE
SSPPA	STRUCTURAL STEEL PLATE PIPE ARCH
SSRP	STEEL SPIRAL RIB PIPE
St	STREET
Sta	STATION
STBB	SINGLE THRIE BEAM BARRIER
Std	STANDARD
Str	STRUCTURE
Surf	SURFACING
SW	SIDEWALK, SOUND WALL
Swr	SEWER
Sym	SYMMETRICAL
S4S	SURFACE 4 SIDES

T

T	SEMI-TANGENT
Tan	TANGENT
TBB	THRIE BEAM BARRIER
Tbr	TIMBER
TC	TOP OF CURB
TCB	TRAFFIC CONTROL BOX
TCE	TEMPORARY CONSTRUCTION EASEMENT
Tel	TELEPHONE
Temp	TEMPORARY
TG	TOP OF GRADE
Tot	TOTAL
TP	TELEPHONE POLE
TPB	TREATED PERMEABLE BASE
TPM	TREATED PERMEABLE MATERIAL
Trans	TRANSITION

T continued

TS	TRANSVERSE, TRAFFIC SIGNAL, TUBULAR STEEL
Typ	TYPICAL

U

UC	UNDERCROSSING
UD	UNDERDRAIN
UG	UNDERGROUND
UON	UNLESS OTHERWISE NOTED
UP	UNDERPASS

V

V	VALVE, DESIGN SPEED
Var	VARIABLE, VARIES
VC	VERTICAL CURVE
VCP	VITRIFIED CLAY PIPE
Vert	VERTICAL
Via	VIADUCT
Vol	VOLUME

W

W	WEST, WIDTH
WB	WESTBOUND
WH	WEEP HOLE
WM	WIRE MESH
WS	WATER SURFACE
WSP	WELDED STEEL PIPE
Wt	WEIGHT
WV	WATER VALVE
WW	WINGWALL
WWLOL	WINGWALL LAYOUT LINE

X

X Sec	CROSS SECTION
Xing	CROSSING

Y

Yr	YEAR
Yrs	YEARS

Dist	COUNTY	ROUTE	POST MILES TOTAL PROJECT	SHEET No.	TOTAL SHEETS
03	ED	89	13.8/18.0	154	164

Grace M. Tsushima
REGISTERED CIVIL ENGINEER

July 19, 2013
PLANS APPROVAL DATE

Grace M. Tsushima No. C49814 Exp. 9-30-14 CIVIL — REGISTERED PROFESSIONAL ENGINEER — STATE OF CALIFORNIA

THE STATE OF CALIFORNIA OR ITS OFFICERS OR AGENTS SHALL NOT BE RESPONSIBLE FOR THE ACCURACY OR COMPLETENESS OF SCANNED COPIES OF THIS PLAN SHEET.

TO ACCOMPANY PLANS DATED 6-16-14

UNIT OF MEASUREMENT SYMBOLS:

Some of the symbols used in the project plan quantity tables and in the Bid Item List are:

TABLE A

SYMBOL USED	DEFINITIONS
ACRE	ACRE
CF	CUBIC FOOT
CY	CUBIC YARD
EA	EACH
GAL	GALLON
LB	POUND
LF	LINEAR FOOT
SQFT	SQUARE FOOT
SQYD	SQUARE YARD
STA	100 FEET
TAB	TABLET
TON	2,000 POUNDS

Some of the symbols used in the plans other than in the project plan quantity tables are:

TABLE B

SYMBOL USED	DEFINITIONS
ksi	KIPS PER SQUARE INCH
ksf	KIPS PER SQUARE FOOT
psi	POUNDS PER SQUARE INCH
psf	POUNDS PER SQUARE FOOT
lb/ft^3, pcf	POUNDS PER CUBIC FOOT
tsf	TONS PER SQUARE FOOT
mph, MPH *	MILES PER HOUR
ø	NOMINAL DIAMETER
oz	OUNCE
lb	POUND
kip	1,000 POUNDS
cal	CALORIE
ft	FOOT OR FEET
gal	GALLON

* For use on a sign panel only

STATE OF CALIFORNIA
DEPARTMENT OF TRANSPORTATION

ABBREVIATIONS (SHEET 2 OF 2)

NO SCALE

RSP A10B DATED JULY 19, 2013 SUPERSEDES STANDARD PLAN A10B DATED MAY 20, 2011 - PAGE 2 OF THE STANDARD PLANS BOOK DATED 2010.

REVISED STANDARD PLAN RSP A10B

2010 REVISED STANDARD PLAN RSP A10B

6-7-13

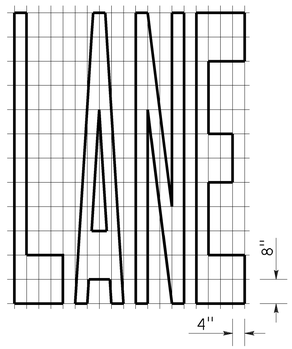

A=24 ft²

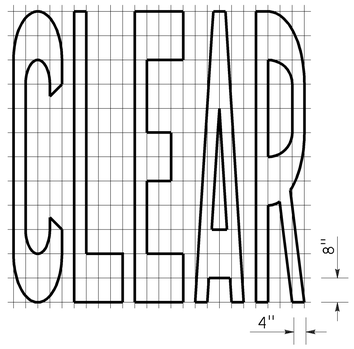

A=27 ft²

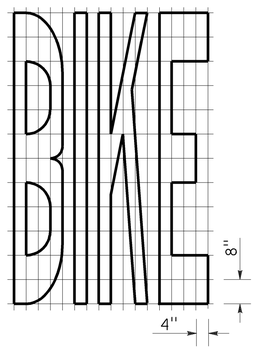

A=21 ft²

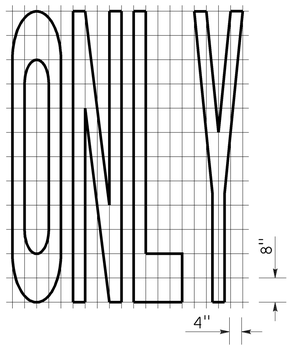

A=22 ft²

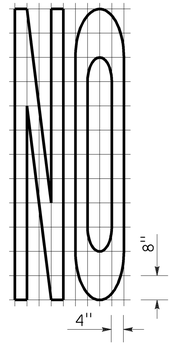

A=14 ft²

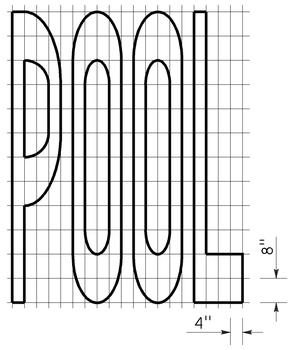

A=23 ft²

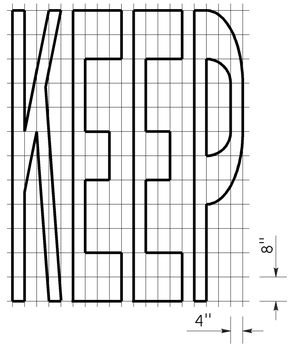

A=24 ft²

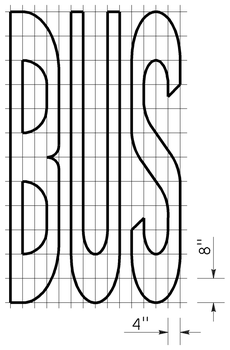

A=20 ft²

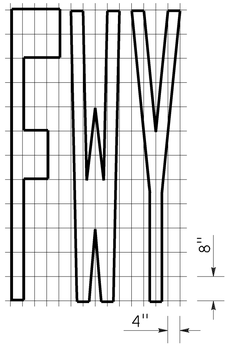

A=16 ft²

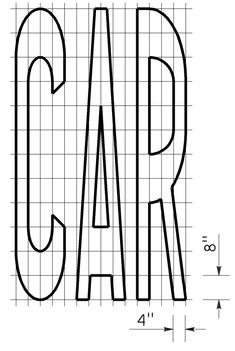

A=17 ft²

Dist	COUNTY	ROUTE	POST MILES TOTAL PROJECT	SHEET No.	TOTAL SHEETS
03	ED	89	13.8/18.0	155	164

Roberta L. McLaughlin
REGISTERED CIVIL ENGINEER

July 20, 2012
PLANS APPROVAL DATE

REGISTERED PROFESSIONAL ENGINEER
Roberta L. McLaughlin
No. C40375
Exp. 3-31-13
CIVIL
STATE OF CALIFORNIA

THE STATE OF CALIFORNIA OR ITS OFFICERS OR AGENTS SHALL NOT BE RESPONSIBLE FOR THE ACCURACY OR COMPLETENESS OF SCANNED COPIES OF THIS PLAN SHEET.

TO ACCOMPANY PLANS DATED 6-16-14

WORD MARKINGS			
ITEM	ft²	ITEM	ft²
LANE	24	NO	14
POOL	23	BIKE	21
CAR	17	BUS	20
CLEAR	27	ONLY	22
KEEP	24	FWY	16

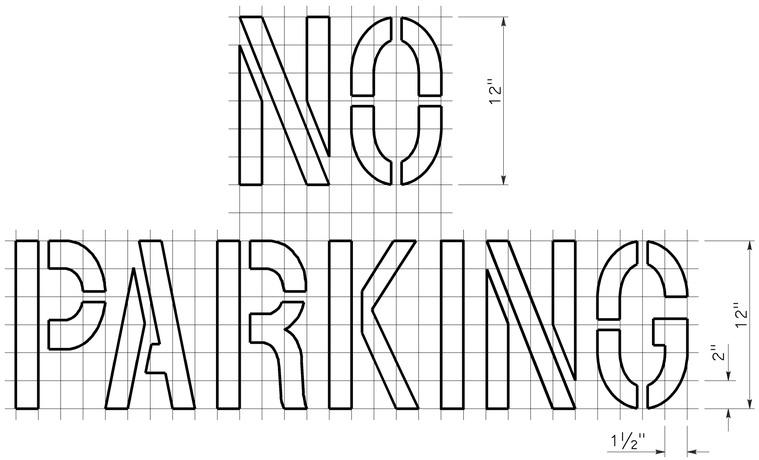

A=2 ft²
See Notes 6 and 7

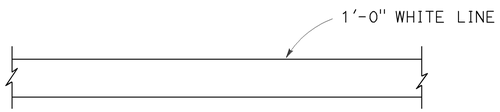

LIMIT LINE (STOP LINE)

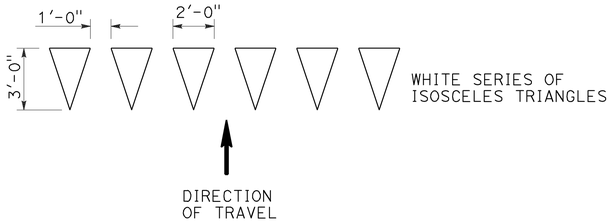

YIELD LINE

NOTES:

1. If a message consists of more than one word, it should read "UP", i.e., the first word should be nearest the driver.
2. The space between words should be at least four times the height of the characters for low speed roads, but not more than ten times the height of the characters. The space may be reduced appropriately where there is limited space because of local conditions.
3. Minor variations in dimensions may be accepted by the Engineer.
4. Portions of a letter, number or symbol may be separated by connecting segments not to exceed 2" in width.
5. The words "NO PARKING" pavement marking is to be used for parking facilities. For typical locations of markings, see Standard Plans A90A and A90B.
6. The words "NO PARKING", shall be painted in white letters no less than 1'-0" high on a contrasting background and located so that it is visible to traffic enforcement officials.

STATE OF CALIFORNIA
DEPARTMENT OF TRANSPORTATION

PAVEMENT MARKINGS
WORDS, LIMIT AND YIELD LINES

NO SCALE

RSP A24E DATED JULY 20, 2012 SUPERSEDES STANDARD PLAN A24E
DATED MAY 20, 2011 - PAGE 17 OF THE STANDARD PLANS BOOK DATED 2010.

REVISED STANDARD PLAN RSP A24E

2010 REVISED STANDARD PLAN RSP A24E

6-12-12

Dist	COUNTY	ROUTE	POST MILES TOTAL PROJECT	SHEET No.	TOTAL SHEETS
03	ED	89	13.8/18.0	156	164

Randell D. Hiatt
REGISTERED CIVIL ENGINEER

July 19, 2013
PLANS APPROVAL DATE

REGISTERED PROFESSIONAL ENGINEER
Randell D. Hiatt
No. C50200
Exp. 6-30-15
CIVIL
STATE OF CALIFORNIA

THE STATE OF CALIFORNIA OR ITS OFFICERS OR AGENTS SHALL NOT BE RESPONSIBLE FOR THE ACCURACY OR COMPLETENESS OF SCANNED COPIES OF THIS PLAN SHEET.

TO ACCOMPANY PLANS DATED 6-16-14

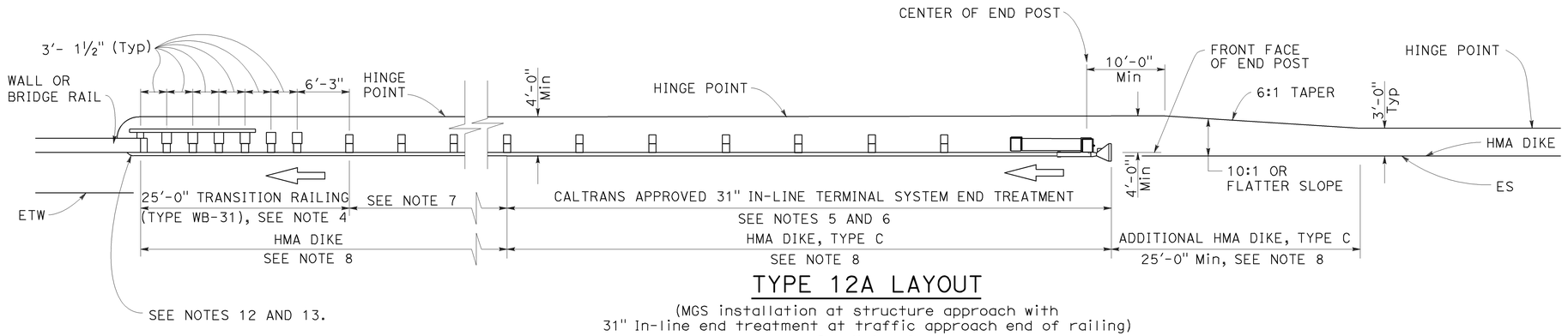

TYPE 12A LAYOUT

(MGS installation at structure approach with
31" In-line end treatment at traffic approach end of railing)
See Notes 9

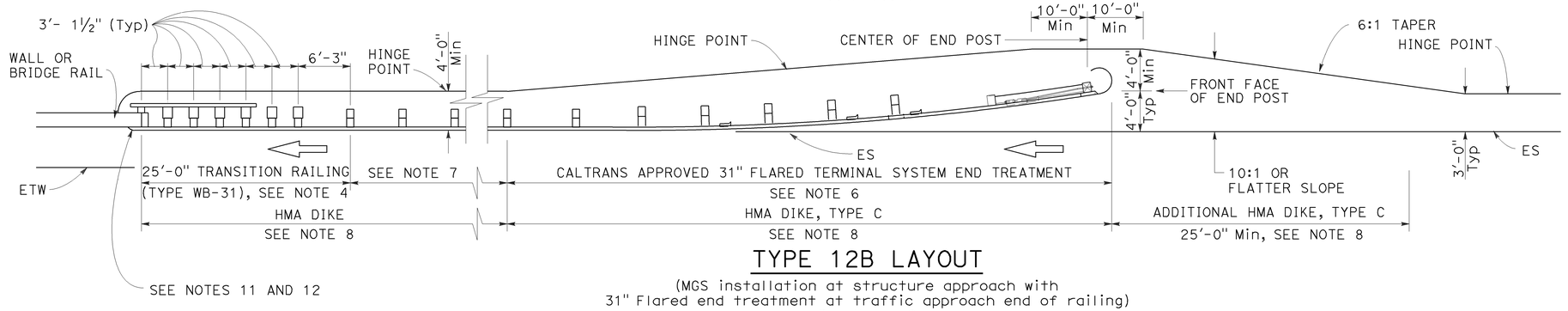

TYPE 12B LAYOUT

(MGS installation at structure approach with
31" Flared end treatment at traffic approach end of railing)
See Notes 9

NOTES:

1. Line post, blocks and hardware to be used are shown on Revised Standard Plans RSP A77L1, RSP A77L2, RSP A77M1, RSP A77N1 and RSP A77N2.
2. MGS post spacing to be 6'-3" center to center, except as otherwise noted.
3. Except as noted, line posts are 6" x 8" x 6'-0" wood with 6" x 12" x 1'-2" wood blocks. W6 x 8.5 or W6 x 9 steel posts, 6'-0" in length, with 6" x 12" x 1'-2" notched wood blocks or plastic blocks may be used for 6" x 8" x 6'-0" wood posts with 6" x 12" x 1'-2" wood blocks where applicable and when specified.
4. For Transition Railing (Type WB-31) details for Types 12A and 12B Layouts, see Revised Standard Plan RSP A77U4.
5. 31" in-line terminal system end treatments are used where site conditions will not accommodate a 31" flared end treatment.
6. The type 31" of terminal system end treatment to be used will be shown on the Project Plans.
7. Dependent on site conditions (embankment height, side slopes, or other fixed objects), it may be advisable to construct additional guard railing (a length equal to multiples of 12'-6" with 6'-3" post spacing) between the transition railing and end treatment. A 12.5 degree angle of departure can be drawn on the Project Plans from the edge of traveled way through the outer most point of the fixed object to determine the additional length of railing needed.
8. Where placement of dike is required with guard railing installations, see Revised Standard Plan RSP A77N4 for dike positioning details.
9. Type 12A or Type 12B Layouts are typically used:
   a. To the right of approaching traffic, at the end of a structure, on two-lane conventional highway where the roadbed width across the structure is less than 40 feet.
   b. To the left of approaching traffic, at the end of a structure, on two-lane conventional highway where the roadbed width across the structure is less than 40 feet.
   c. To the right of approaching traffic at the end of each structure on multilane freeways or expressways with separate adjacent or parallel bridges.
   d. To the right of approaching traffic at the end of the structure on multilane freeways or expressways with decked median on the bridge.
10. See Revised Standard Plan RSP A77Q3 for typical layout used left of approaching traffic at the ends of each structure on multilane freeways or expressways with separate adjacent or parallel bridges.
11. For additional details of typical connections to bridge rail, see Connection Detail AA on Revised Standard Plans RSP A77U1 and RSP A77U2 and Connection Detail FF on Revised Standard Plans RSP A77V1 and RSP A77V2.
12. For additional details of a typical connection to walls or abutments, see Revised Standard Plan RSP A77U3.

STATE OF CALIFORNIA
DEPARTMENT OF TRANSPORTATION

MIDWEST GUARDRAIL SYSTEM TYPICAL LAYOUTS FOR STRUCTURE APPROACH

NO SCALE

RSP A77Q1 DATED JULY 19, 2013 SUPPLEMENTS THE STANDARD PLANS BOOK DATED 2010.

REVISED STANDARD PLAN RSP A77Q1

2010 REVISED STANDARD PLAN RSP A77Q1

6-19-13

Dist	COUNTY	ROUTE	POST MILES TOTAL PROJECT	SHEET No.	TOTAL SHEETS
03	ED	89	13.8/18.0	157	164

Randell D. Hiatt
REGISTERED CIVIL ENGINEER

July 19, 2013
PLANS APPROVAL DATE

REGISTERED PROFESSIONAL ENGINEER — Randell D. Hiatt — No. C50200 — Exp. 6-30-15 — CIVIL — STATE OF CALIFORNIA

THE STATE OF CALIFORNIA OR ITS OFFICERS OR AGENTS SHALL NOT BE RESPONSIBLE FOR THE ACCURACY OR COMPLETENESS OF SCANNED COPIES OF THIS PLAN SHEET.

TO ACCOMPANY PLANS DATED 6-16-14

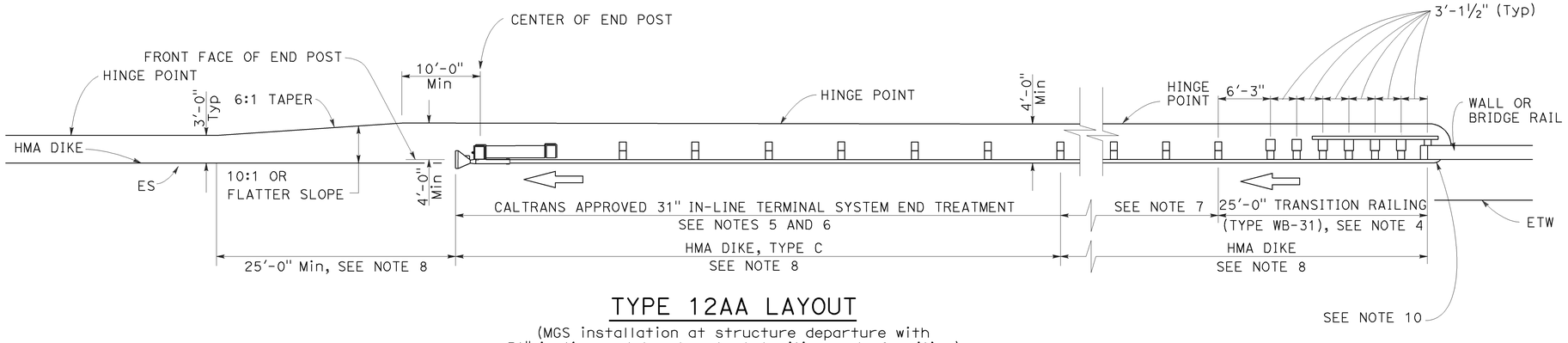

TYPE 12AA LAYOUT

(MGS installation at structure departure with
31" in-line end treatment at trailing end of railing)
See Notes 8 and 9

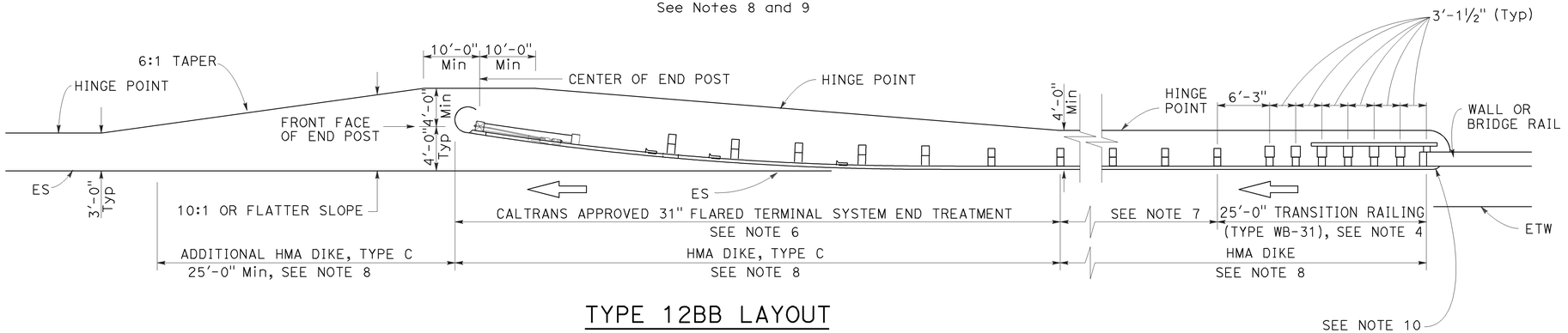

TYPE 12BB LAYOUT

(MGS installation at structure departure with
31" flared end treatment at trailing end of railing)
See Notes 8 and 9

NOTES:

1. Line post, blocks and hardware to be used are shown on Revised Standard Plans RSP A77L1, RSP A77L2, RSP A77M1, RSP A77N1 and RSP A77N2.
2. MGS post spacing to be 6'-3" center to center, except as otherwise noted.
3. Except as noted, line posts are 6" x 8" x 6'-0" wood with 6" x 12" x 1'-2" wood blocks. W6 x 8.5 or W6 x 9 steel posts, 6'-0" in length, with 6" x 12" x 1-2" notched wood blocks or notched recycled plastic blocks may be used for 6" x 8" x 6'-0" wood posts with 6" x 12" x 1'-2" wood blocks where applicable and when specified.
4. For Transition Railing (Type WB-31) details for Types 12AA and 12BB Layouts, see Revised Standard Plan RSP A77U4.
5. 31" in-line terminal system treatments are used where site conditions will not accommodate a 31" flared end treatment.
6. The type of 31" terminal system to be used will be shown on the Project Plans.
7. Dependent on site conditions (embankment height, side slopes, other fixed objects), it may be advisable to construct additional MGS (a length equal to multiples of 12'-6" with 6'-3" post spacing) between the transition railing and 31" end treatments.
8. Where placement of dike is required with MGS installations, see Revised Standard Plan RSP A77N4 for dike positioning details.
9. Type 12AA or Type 12BB Layouts are typically used to the right of traffic departing a structure on two-way conventional highways where the roadbed width across the structure is less than 40 feet.
10. For additional details of typical connections to bridge rail, see Connection Detail CC on Revised Standard Plan RSP A77U2 and Connection Detail HH on Revised Standard Plan RSP A77V2.

STATE OF CALIFORNIA
DEPARTMENT OF TRANSPORTATION

MIDWEST GUARDRAIL SYSTEM TYPICAL LAYOUTS FOR STRUCTURE DEPARTURE

NO SCALE

RSP A77Q4 DATED JULY 19, 2013 SUPPLEMENTS THE STANDARD PLANS BOOK DATED 2010.

REVISED STANDARD PLAN RSP A77Q4

2010 REVISED STANDARD PLAN RSP A77Q4

6-19-13

Dist	COUNTY	ROUTE	POST MILES TOTAL PROJECT	SHEET No.	TOTAL SHEETS
03	ED	89	13.8/18.0	158	164

Randell D. Hiatt
REGISTERED CIVIL ENGINEER

November 15, 2013
PLANS APPROVAL DATE

REGISTERED PROFESSIONAL ENGINEER — Randell D. Hiatt — No. C50200 — Exp. 6-30-15 — CIVIL — STATE OF CALIFORNIA

THE STATE OF CALIFORNIA OR ITS OFFICERS OR AGENTS SHALL NOT BE RESPONSIBLE FOR THE ACCURACY OR COMPLETENESS OF SCANNED COPIES OF THIS PLAN SHEET.

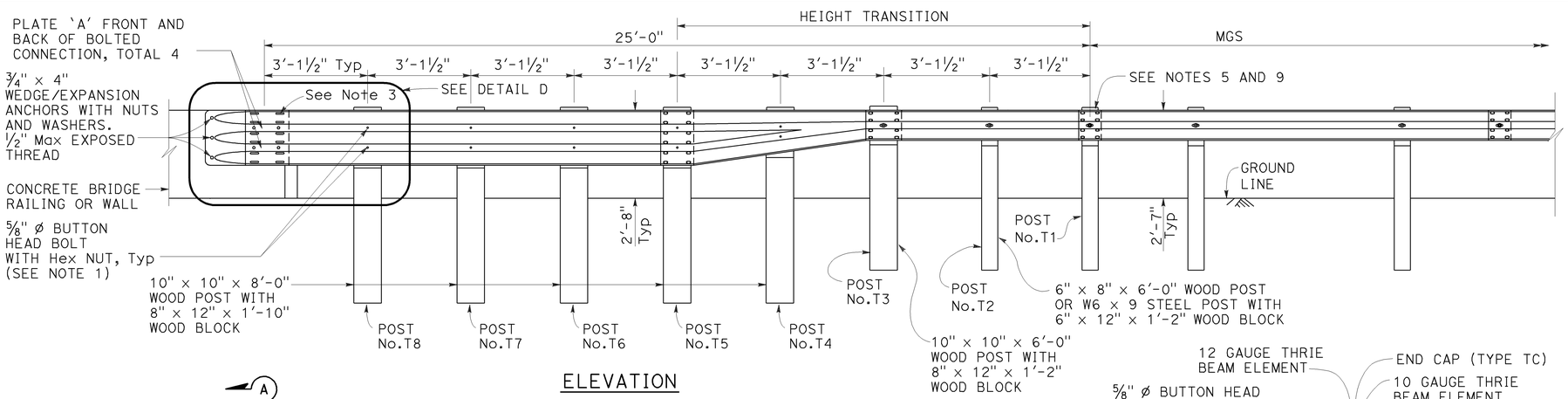

ELEVATION

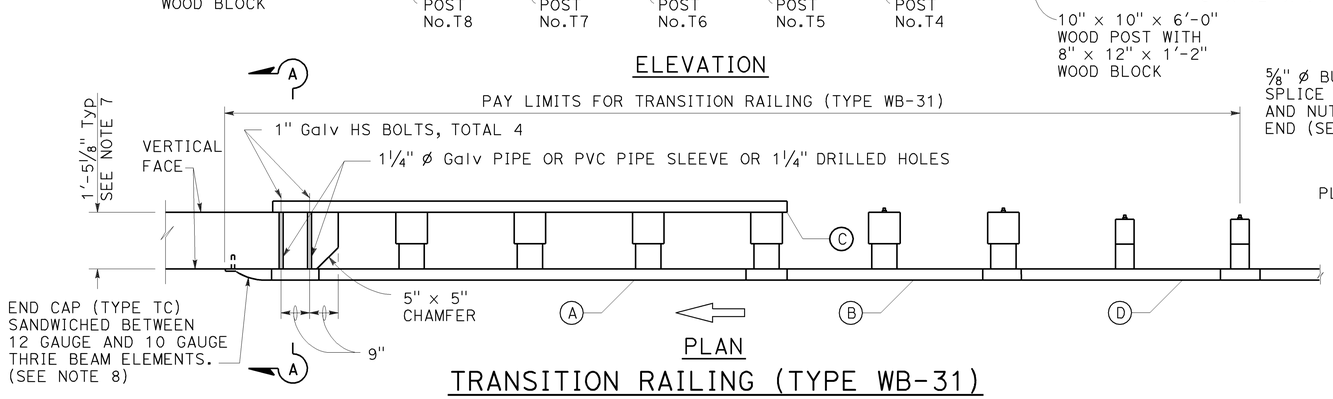

PLAN

TRANSITION RAILING (TYPE WB-31)

(No Blockout Attachment)

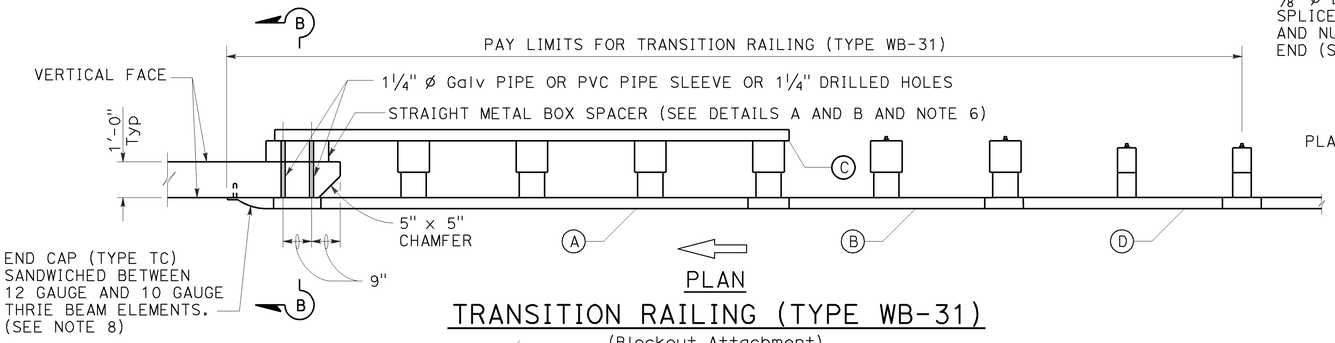

PLAN

TRANSITION RAILING (TYPE WB-31)

(Blockout Attachment)

LEGEND:

- (A) NESTED THRIE BEAM ELEMENTS (ONE 12 GAUGE ELEMENT NESTED OVER ONE 10 GAUGE ELEMENT).
- (B) ONE ASYMMETRICAL 10 GAUGE "W" BEAM TO THRIE BEAM ELEMENT.
- (C) ONE 12 GAUGE THRIE BEAM ELEMENT.
- (D) ONE 10 GAUGE "W" BEAM RAIL ELEMENT (7'-3½"LENGTH)

10 GAUGE = 0.138" THICK
12 GAUGE = 0.108" THICK

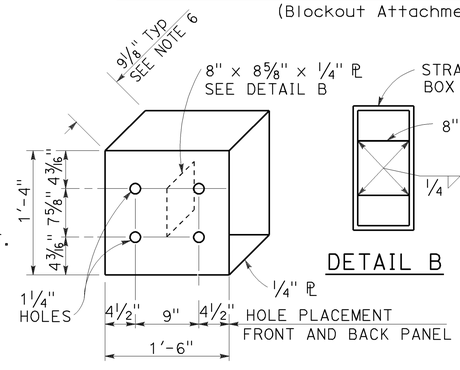

DETAIL A

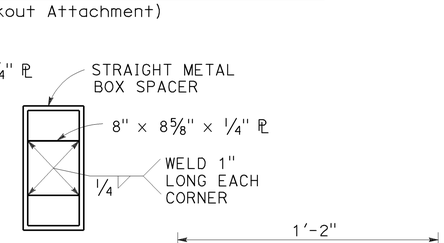

DETAIL B

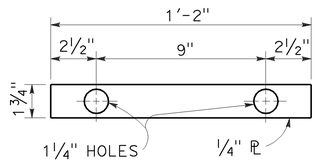

DETAIL C

STRAIGHT METAL BOX SPACER — PLATE 'A'

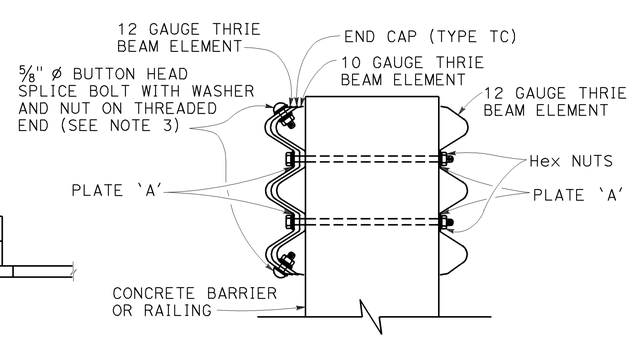

SECTION A-A

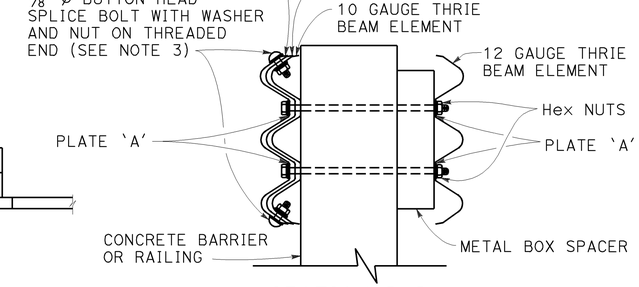

SECTION B-B

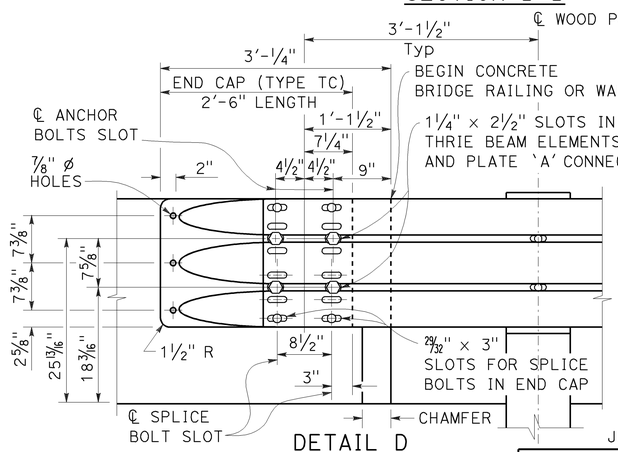

DETAIL D

NOTES: TO ACCOMPANY PLANS DATED 6-16-14

1. Use ⅝" ø Button head bolts and hex nuts for connections to posts. No washer on rail face for bolted connections to post.
2. The nested rail elements, end cap, and 'W' beam to thrie beam element may be spliced together prior to bolting the elements to the wood post and concrete barrier or railing.
3. Exterior splice bolt holes for rail element splices at Post No. T5 and the connection to the concrete barrier or railing shall be the standard 29/32" x 1⅛" slot size. Interior splice bolt holes at these locations may be increased up to 1¼" ø. Only the top 4 and the bottom 4 splice bolts with washers and nuts are required for rail splices at Post No. T5 and the connection to the concrete barrier or railing.
4. The top elevation of Posts No. T2 through No. T7 shall not project more than 1" above the top elevation of the rail element.
5. Typically, the railing connected to Transition Railing (Type WB-31) will be either standard railing section of MGS with height transition ratio of 150:1 or a Caltrans approved 31" end treatment attached to Post No. T1.
6. The depth of the metal box spacer varies from the 9⅛" to 1½" and is dependent on the width of the concrete railing or wall. The combined dimension for the depth of the metal box spacer plus the width of railing or wall is typically 21⅛". Where the space between the backside of the concrete railing or wall and the rear thrie beam element is less than 1½", metal plates similar to Plate 'A' are to be used as spacers.
7. Where the width of the concrete railing or wall is greater than 17⅛", wood blocks are to be used to fill the space created between the backside of Posts No. T5 through No. T8 and the rear thrie beam element. These wood blocks shall be 8" in width and 1'-2" in length. The dimension between the front thrie beam element and the rear thrie beam element is to match the width of the concrete railing or wall.
8. End cap may be installed over 12 gauge and 10 gauge thrie beam elements where transition railing is installed on the departure end of bridge railing.
9. Conform standard railing section height to 31" at Post No. T1 using height transition ratio of 150:1.

STATE OF CALIFORNIA
DEPARTMENT OF TRANSPORTATION

MIDWEST GUARDRAIL SYSTEM TRANSITION RAILING (TYPE WB-31)

NO SCALE

RSP A77U4 DATED NOVEMBER 15, 2013 SUPERSEDES RSP A77U4 DATED JULY 19, 2013 THAT SUPPLEMENTS THE STANDARD PLANS BOOK DATED 2010.

REVISED STANDARD PLAN RSP A77U4

2010 REVISED STANDARD PLAN RSP A77U4

10-4-13

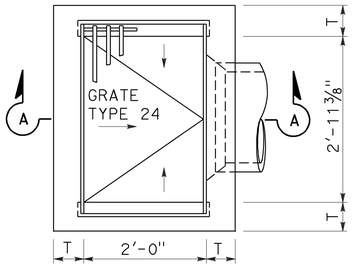

TYPE G1

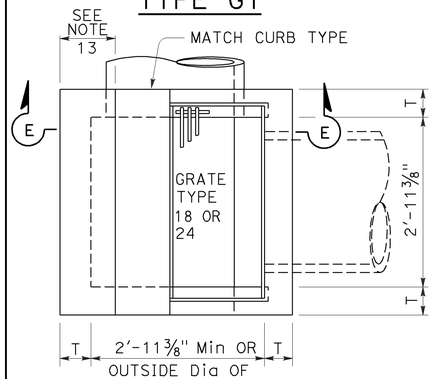

TYPE G4

SECTION A-A

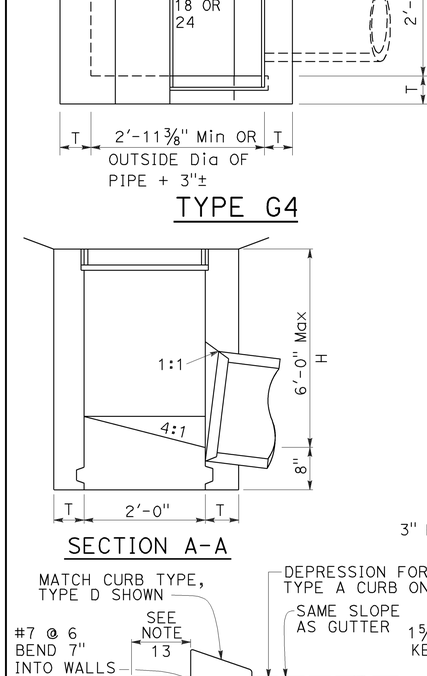

SECTION E-E

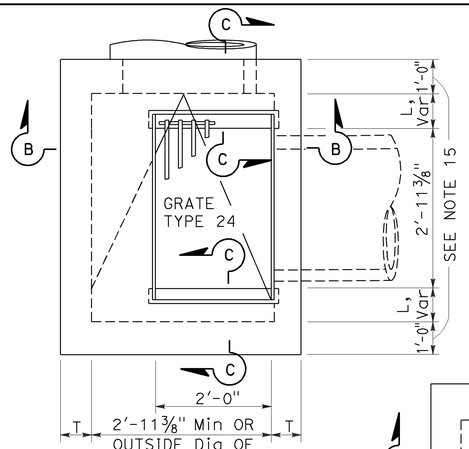

TYPE G2

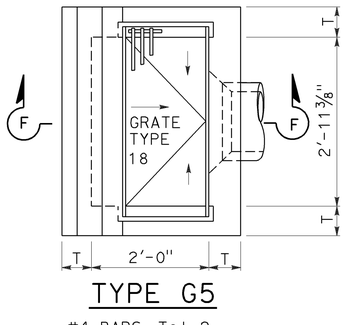

TYPE G5

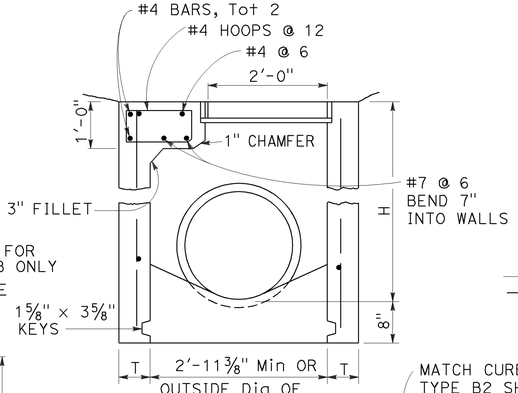

SECTION B-B

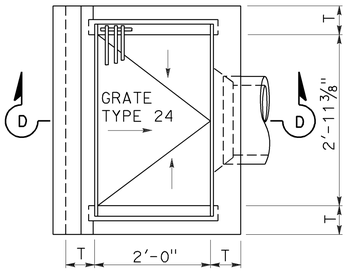

TYPE G3

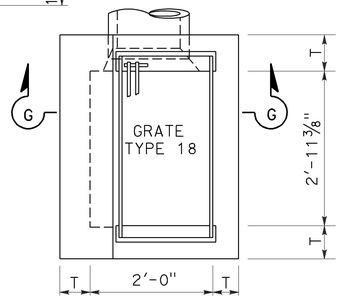

TYPE G6

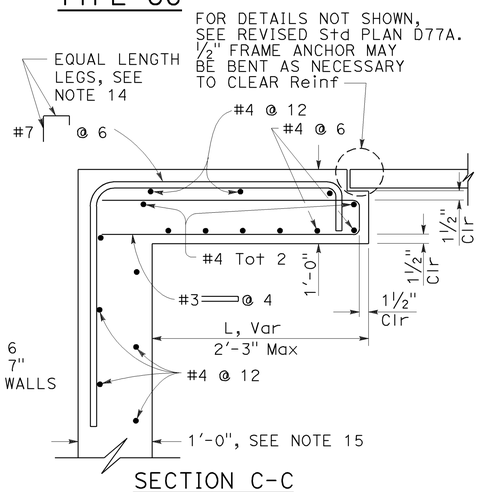

SECTION C-C

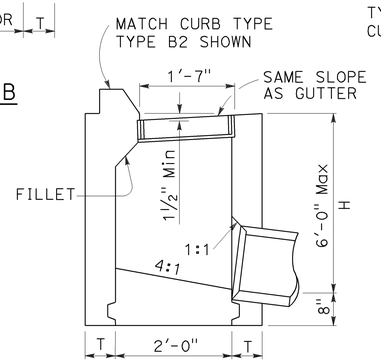

SECTION F-F

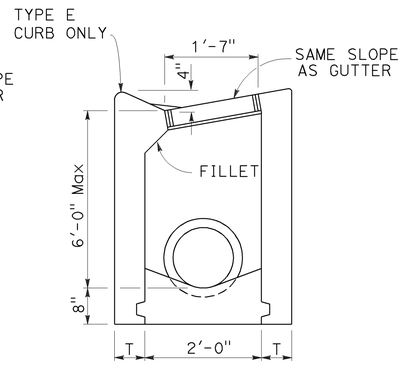

SECTION G-G

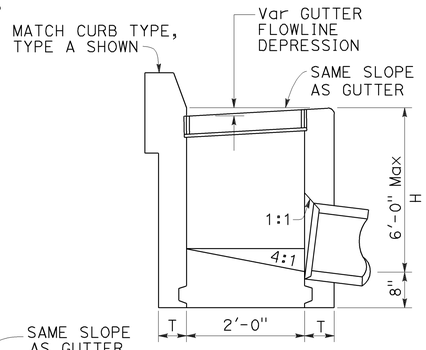

SECTION D-D

TO ACCOMPANY PLANS DATED 6-16-14

Dist	COUNTY	ROUTE	POST MILES TOTAL PROJECT	SHEET No.	TOTAL SHEETS
03	ED	89	13.8/18.0	159	164

Glenn DeCou
REGISTERED CIVIL ENGINEER

October 19, 2012
PLANS APPROVAL DATE

REGISTERED PROFESSIONAL ENGINEER
Glenn DeCou
No. C34547
Exp. 9-30-13
CIVIL
STATE OF CALIFORNIA

THE STATE OF CALIFORNIA OR ITS OFFICERS OR AGENTS SHALL NOT BE RESPONSIBLE FOR THE ACCURACY OR COMPLETENESS OF SCANNED COPIES OF THIS PLAN SHEET.

NOTES:

1. "H" is the difference in elevation between the outlet pipe flow line and the normal gutter grade line undepressed.
2. For "T" wall thickness, see Table A below.
3. Wall reinforcing not required when "H" is 8'-0" or less and the unsupported width or length is 7'-0" or less. Walls exceeding these limits shall be reinforced with #4 bars @ 1'-6" ± centers placed 1½" clear to inside of box unless otherwise shown.
4. Inlet bottom reinforcing not required. See Standard Plan D74C for alternative reinforced bottom and alternative half round bottom.
5. Steps-None required where "H" is less than 2'-6". Where "H" is 2'-6" or more, install steps with lowest rung 1'-0" above the floor and highest rung not more than 6" below top of inlet. The distance between steps shall not exceed 1'-0" and shall be uniform throughout the length of the wall. Place steps in the wall without an opening. Steps inserts may be substituted for the bar steps. Step inserts shall comply with State Industrial Safety requirements. See Standard Plan D74C for step details.
6. Details shown apply to both metal and concrete pipe.
7. Pipe(s) can be placed in any wall.
8. Curb section shall match adjacent curb.
9. Basin floors shall have wood trowel finish and a minimum slope of 12:3 from all directions toward outlet pipe.
10. Set inlet so that grate bars are parallel to direction of principal surface flow.
11. See Revised Standard Plans D77A and D77B for grate and frame details and weights of miscellaneous iron and steel.
12. See Standard Plan D78A for gutter depression details.
13. This dimenison will vary with different grates, curbs types, box width and wall thickness.
14. Bar may be rotated as necessary to clear opening. Where "L" is 6" or less, bar may be omitted.
15. Where "L" is 6" or less, wall thickness shall be as shown in Table A.
16. Cast-in-place inlets to be formed around all pipes/stubs intersecting the inlet, and concrete poured in one continuous operation. Precast inlets shall have mortared connections conforming to details for Type GCP Inlet shown on Standard Plan D75B. See Standard Specifications for mortar composition.

TABLE A

TYPE	CONCRETE QUANTITIES			
	H=3'-0" TO 8'-0" (T=6")		H=8'-1" TO 20'-0" (T=8")	
	H=3'-0" (CY)	ADDITIONAL PCC PER FOOT (CY)	H=8'-1" (CY)	ADDITIONAL PCC PER FOOT (CY)
G-1	0.95	0.220	See Note A	SEE NOTE A
G-2*	1.31	0.255	3.50	0.357
G-3	1.03	0.220	See Note A	SEE NOTE A
G-4* (TYPE 24)	1.27	0.255	3.48	0.357
G-4* (TYPE 18)	1.30	0.255	3.50	0.357
G-5	1.02	0.220	SEE NOTE A	SEE NOTE A
G-6	1.04	0.220	SEE NOTE A	SEE NOTE A

TABLE BASED ON 8" FLOOR SLAB. NO DEDUCTIONS ARE TO BE MADE TO THESE QUANTITIES BECAUSE OF PIPE OPENINGS, DIFFERENT FLOOR ALTERNATIVES OR DIFFERENT CURB TYPES. * QUANTITIES FOR TYPE G-2 AND G-4 INLETS BASED ON THE MINIMUM INTERIOR DIMENSIONS.

NOTE A:

Maximum allowable height 6'-0".

STATE OF CALIFORNIA
DEPARTMENT OF TRANSPORTATION

DRAINAGE INLETS

NO SCALE

RSP D73 DATED OCTOBER 19, 2012 SUPERSEDES STANDARD PLAN D73 DATED MAY 20, 2011 - PAGE 156 OF THE STANDARD PLANS BOOK DATED 2010.

REVISED STANDARD PLAN RSP D73

2010 REVISED STANDARD PLAN RSP D73

7-19-12

Dist	COUNTY	ROUTE	POST MILES TOTAL PROJECT	SHEET No.	TOTAL SHEETS
03	ED	89	13.8/18.0	160	164

Raymond Don Tsztoo
REGISTERED CIVIL ENGINEER

April 19, 2013
PLANS APPROVAL DATE

REGISTERED PROFESSIONAL ENGINEER — Raymond Don Tsztoo — No. C37332 — Exp. 6-30-14 — CIVIL — STATE OF CALIFORNIA

THE STATE OF CALIFORNIA OR ITS OFFICERS OR AGENTS SHALL NOT BE RESPONSIBLE FOR THE ACCURACY OR COMPLETENESS OF SCANNED COPIES OF THIS PLAN SHEET.

TO ACCOMPANY PLANS DATED 6-16-14

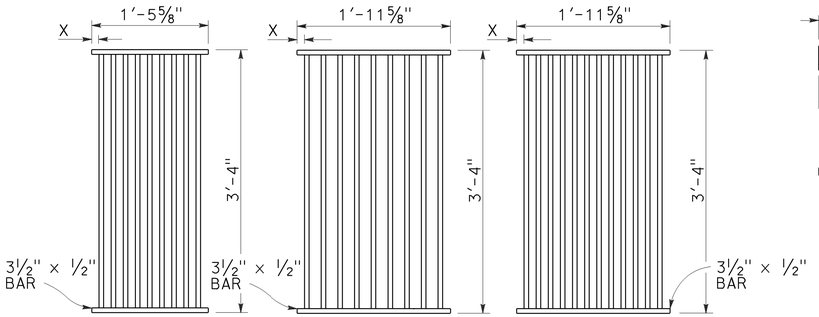

TYPE 18-9

1⅜" Clear spacing. Use within the roadbed on highways where bicycles and pedestrians are excluded.

TYPE 24-9

2" Clear spacing. Use in locations off the roadbed on all types of highways.

TYPE 24-12

1⅜" Clear spacing. Use within the roadbed on highways where bicycles and pedestrians are excluded.

RECTANGULAR GRATE DETAILS

(See table below)

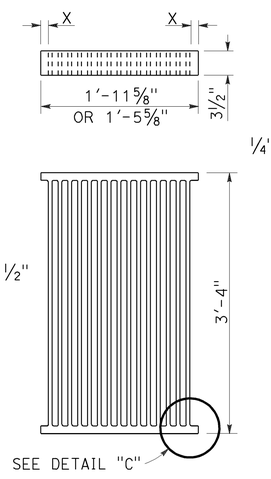

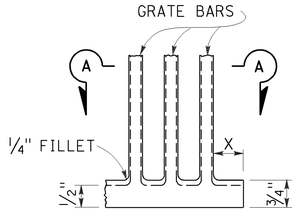

DETAIL "C"

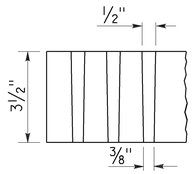

SECTION A-A

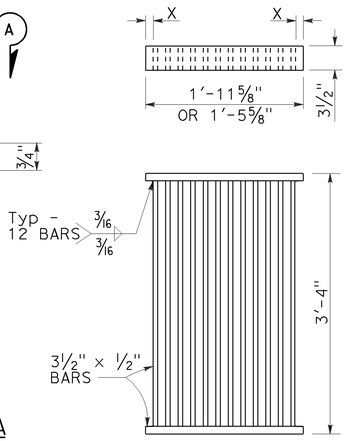

ALTERNATIVE CAST DUCTILE IRON GRATE OR CAST CARBON STEEL GRATE

ALTERNATIVE WELDED GRATE

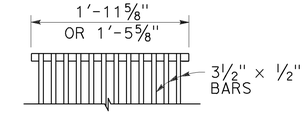

CAST END BLOCK

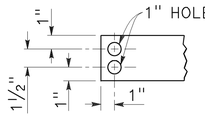

END OF BAR

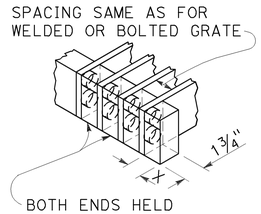

ALTERNATIVE CAST DUCTILE IRON OR CAST CARBON STEEL END BLOCK GRATE

NOTES:

1. Grate type numbers refer to approximate width of grate in inches and number of bars, respectively.
2. Contractor has the option of using cast ductile iron, cast carbon steel, welded, bolted, or cast end block grate.
3. Rounded top of bars optional on all grates.
4. Pipe inlets with a grate shall be placed so that bars parallel direction of principle surface flow.
5. Complete joint penetration butt welds may be substituted for the fillet welds on all anchors.
6. Standard square, hexagon, round or equivalent headed anchors may be substituted for the right angle hooks on the anchors shown on this plan.
7. Grate and frame weights are based on welded grates (weights of face angles, steps, protection bars, etc. are not included).
8. Connect chain to grate and frame only at locations shown on the plans. When chain is required, do not use cast ductile iron grates.

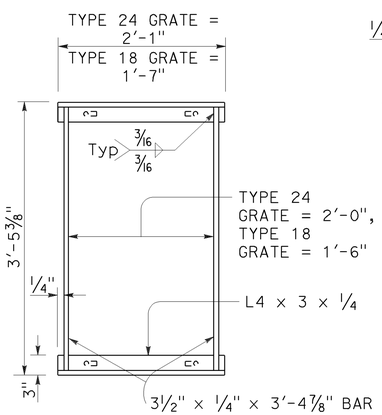

TYPICAL FRAME

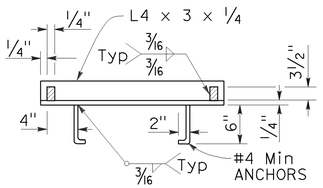

CROSS SECTION
(Thru frame)

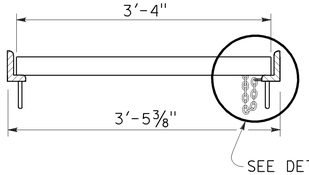

LONGITUDINAL SECTION
(Thru frame and grate)

RECTANGULAR FRAME DETAILS

(For all rectangular grates)

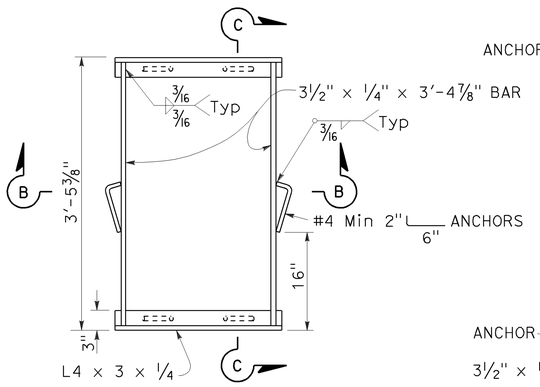

TYPICAL FRAME

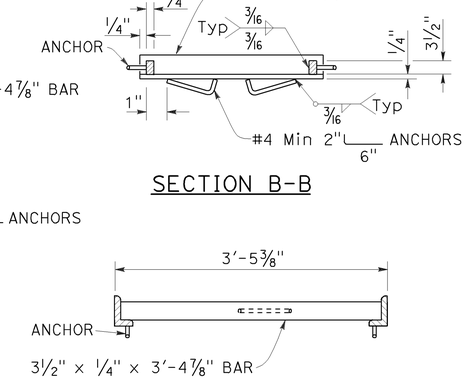

SECTION B-B

SECTION C-C

ALTERNATIVE ANCHOR FOR RECTANGULAR FRAME

(For details not shown, See Rectangular Frame Details)

INLET TYPE	GRATE TYPE	No. OF GRATES	WEIGHT LB
GDO	24-12	2	634
GOL-7	24-12	1	326
GOL-10	24-12	1	326
GO,G1,G2,G3,G4 (TYPE 24)	24-9	1	263
	24-12	1	326
G4 (TYPE 18),G5,G6	18-9	1	249
GT1	18-9	2	498
GT2	18-9	2	498
GT3	24-12	2	652
GT4	24-12	2	652
TRASH RACK			22
GRATE CHAIN			3

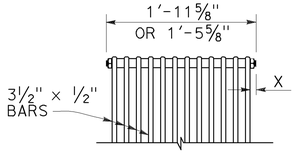

BOLTED END BLOCK

BOLTING DETAIL

ALTERNATIVE BOLTED GRATE

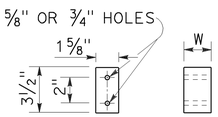

BAR SPACER

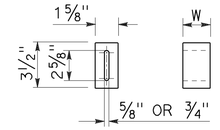

ALTERNATIVE SPACER
W = 1⅜" or 2"

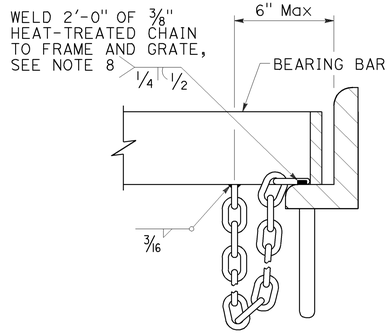

DETAIL "D"
(Steel grates only)

GRATE BAR SPACING TABLE

TYPE	No. OF BARS	CLEAR BAR SPACING	X
18-9	9	1⅜"	1 1/16"
24-9	9	2"	1 9/16"
24-12	12	1⅜"	1¼"

INLET TYPE	COVER TYPE	WEIGHT LB
OS	PLATE	174
OL-7	PLATE	170
OL-10	PLATE	170
OL-14	PLATE	170
OL-21	PLATE	170
OCP	PLATE	112
OCPI	PLATE	112
OCPI	REDWOOD	42
OMP	PLATE	177
OMPI	PLATE	177

BASIS FOR Misc IRON & STEEL FINAL PAY WEIGHTS FOR DRAINAGE INLETS

(See Note 7)

STATE OF CALIFORNIA
DEPARTMENT OF TRANSPORTATION

GRATE DETAILS No. 1

NO SCALE

RSP D77A DATED APRIL 19, 2013 SUPERSEDES RSP D77A DATED JULY 20, 2012 AND STANDARD PLAN D77A DATED MAY 20, 2011 - PAGE 164 OF THE STANDARD PLANS BOOK DATED 2010.

REVISED STANDARD PLAN RSP D77A

2010 REVISED STANDARD PLAN RSP D77A

4-4-13

Dist	COUNTY	ROUTE	POST MILES TOTAL PROJECT	SHEET No.	TOTAL SHEETS
03	ED	89	13.8/18.0	161	164

Raymond Don Tsztoo
REGISTERED CIVIL ENGINEER

April 19, 2013
PLANS APPROVAL DATE

Raymond Don Tsztoo No. C37332 Exp. 6-30-14 CIVIL — REGISTERED PROFESSIONAL ENGINEER — STATE OF CALIFORNIA

THE STATE OF CALIFORNIA OR ITS OFFICERS OR AGENTS SHALL NOT BE RESPONSIBLE FOR THE ACCURACY OR COMPLETENESS OF SCANNED COPIES OF THIS PLAN SHEET.

TO ACCOMPANY PLANS DATED 6-16-14

2010 REVISED STANDARD PLAN RSP D77B

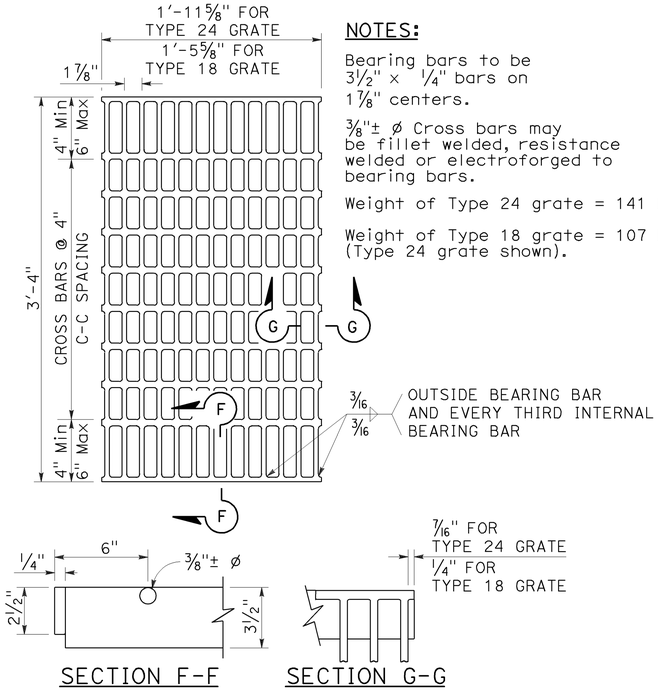

SECTION F-F SECTION G-G

NOTES:

Bearing bars to be 3½" × ¼" bars on 1⅞" centers.

⅜"± ø Cross bars may be fillet welded, resistance welded or electroforged to bearing bars.

Weight of Type 24 grate = 141 LBS.

Weight of Type 18 grate = 107 LBS. (Type 24 grate shown).

TYPE 18-10 AND 24-13 GRATE

(Welded Steel)

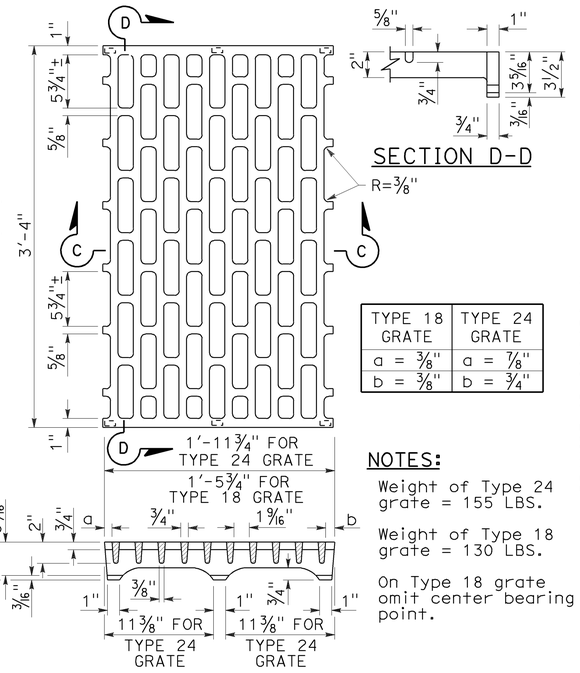

SECTION C-C

TYPE 18 GRATE	TYPE 24 GRATE
a = ⅜"	a = ⅞"
b = ⅜"	b = ¾"

SECTION D-D

NOTES:

Weight of Type 24 grate = 155 LBS.

Weight of Type 18 grate = 130 LBS.

On Type 18 grate omit center bearing point.

TYPE 18-8C AND 24-10C GRATE

(Cast ductile iron)

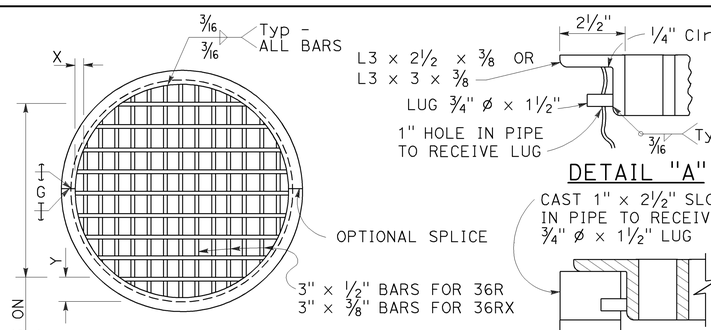

DETAIL "A"

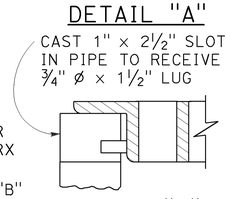

DETAIL "B"

TYPE 36R AND 36RX GRATE DETAILS

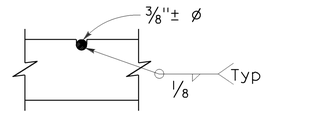

⅜"± ø Cross bars may be fillet welded, resistance welded or electroforged to bearing bars.

CROSS BAR DETAIL TYPE 36RX GRATE (WELDED STEEL)

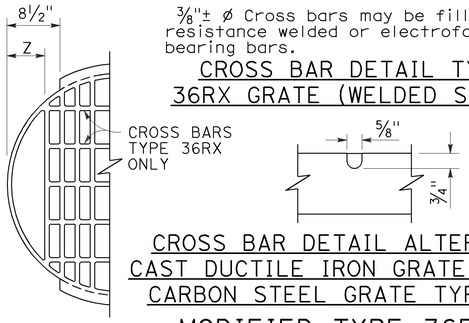

CROSS BAR DETAIL ALTERNATIVE CAST DUCTILE IRON GRATE OR CAST CARBON STEEL GRATE TYPE 36RX

MODIFIED TYPE 36R AND 36RX GRATE FOR ODI INLET

NOTES:

1. When alternative grates are allowed - Final pay based on alternative with the lesser weight.
2. Use frame shown on Standard Plan D74A, D74B or RSP D77A as appropriate.
3. When Type 24-10S, 24-12X or 24-13 grates are used with GDO Inlets, a ¼" × 3½" × 3'-4⅞" steel bar shall be welded across the center of inlet frame to separate the individual grates.
4. See Revised Standard Plan RSP D77A for connecting chain to welded grate and frame. When chain is required, do not use cast ductile iron grate.

GRATE BAR SPACING TABLE

TYPE	No. OF BARS	CLEAR BAR SPACING	X	Y		Z
				4" SPACING	6" SPACING	
36R	13	2"	2⅛"	-	-	-
36RX (STEEL)	15	2"	9/16"	3¾"	5¾"	-
36RX (CAST)	13	2"	2⅛"	3¾"	5¾"	-
36R Mod	12	2"	2⅛"	-	-	5"
36RX Mod (STEEL)	13	2"	9/16"	3¾"	5¾"	5 11/16"
36RX Mod (CAST)	12	2"	2⅛"	3¾"	5¾"	5"

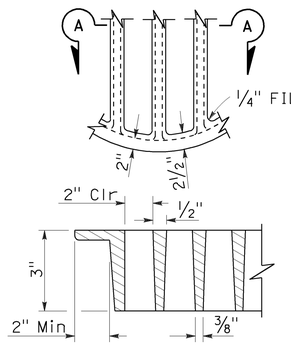

SECTION A-A

ALTERNATIVE CAST DUCTILE IRON GRATE OR CAST CARBON STEEL GRATE TYPE 36R AND 36RX

BASIS FOR Misc IRON AND STEEL FINAL PAY WEIGHTS FOR DRAINAGE INLETS

INLET TYPE	GRATE TYPE	No. OF GRATES	WEIGHT LB
GDO (SEE NOTE 4)	24-10C	2	391
	24-10S	2	456
	24-12X	2	473
	24-13	2	374
G0,G0L,G1,G2, G3,G4 (TYPE 24)	24-10C	1	202
	24-10S	1	229
	24-12X	1	239
	24-13	1	188
G4 (TYPE 18) G5,G6	18-8S	1	187
	18-9X	1	187
	18-10	1	149
GT1,GT2	18-8S	2	374
	18-9X	2	374
	18-10	2	298
GT3,GT4	24-10C	2	404
	24-10S	2	458
	24-12X	2	478
	24-13	2	376
ODI	36RX (Mod)	1	196
GMP,GCP,GCPI	36RX	1	215
ODI	36R (Mod)	1	220
GMP,GCP,GCPI	36R	1	236
TRASH RACK			22
GRATE CHAIN			3

STATE OF CALIFORNIA
DEPARTMENT OF TRANSPORTATION

GRATE DETAILS No. 2

NO SCALE

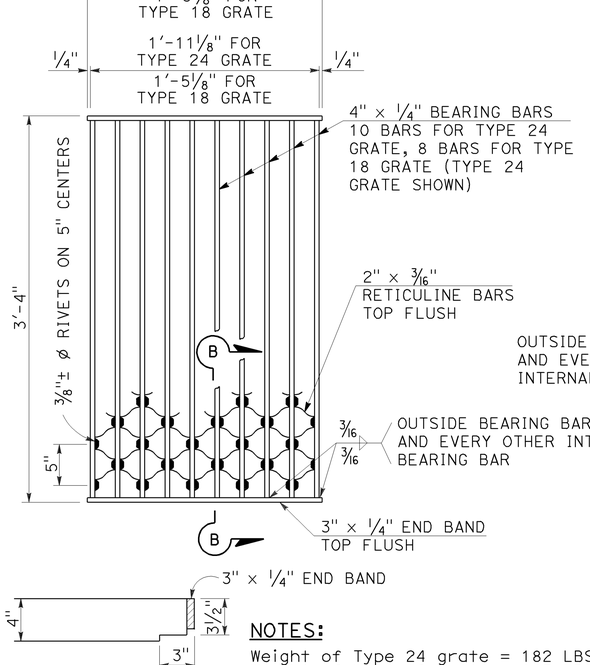

SECTION B-B

NOTES:

Weight of Type 24 grate = 182 LBS.
Weight of Type 18 grate = 145 LBS.

TYPE 18-8S AND 24-10S GRATE

(Welded Steel) Reticuline type

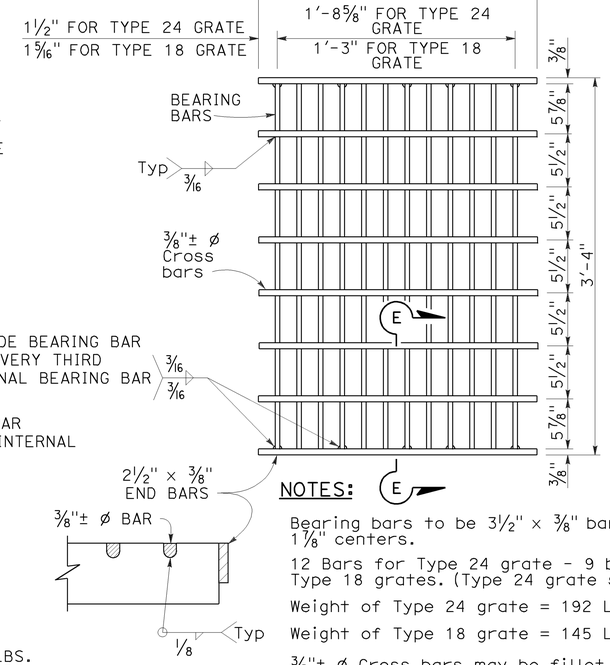

SECTION E-E

NOTES:

Bearing bars to be 3½" × ⅜" bars on 1⅛" centers.

12 Bars for Type 24 grate - 9 bars for Type 18 grates. (Type 24 grate shown).

Weight of Type 24 grate = 192 LBS.

Weight of Type 18 grate = 145 LBS.

⅜"± ø Cross bars may be fillet welded, resistance welded or electroforged to bearing bars.

TYPE 18-9X AND 24-12X GRATE

(Welded Steel)

RSP D77B DATED APRIL 19, 2013 SUPERSEDES RSP D77B DATED JULY 20, 2012 AND STANDARD PLAN D77B DATED MAY 20, 2011 - PAGE 165 OF THE STANDARD PLANS BOOK DATED 2010.

REVISED STANDARD PLAN RSP D77B

4-4-13

Dist	COUNTY	ROUTE	POST MILES TOTAL PROJECT	SHEET No.	TOTAL SHEETS
03	ED	89	13.8/18.0	162	164

REGISTERED CIVIL ENGINEER

July 19, 2013
PLANS APPROVAL DATE

REGISTERED PROFESSIONAL ENGINEER
Gurinderpal Bhullar
No. C48815
Exp. 9-30-14
CIVIL
STATE OF CALIFORNIA

THE STATE OF CALIFORNIA OR ITS OFFICERS OR AGENTS SHALL NOT BE RESPONSIBLE FOR THE ACCURACY OR COMPLETENESS OF SCANNED COPIES OF THIS PLAN SHEET.

TO ACCOMPANY PLANS DATED 6-16-14

TABLE 1

TAPER LENGTH CRITERIA AND CHANNELIZING DEVICE SPACING

SPEED (S)	MINIMUM TAPER LENGTH * FOR WIDTH OF OFFSET 12 FEET (W)				MAXIMUM CHANNELIZING DEVICE SPACING		
					X	Y	Z **
	TANGENT 2L	MERGING L	SHIFTING L/2	SHOULDER L/3	TAPER	TANGENT	CONFLICT
mph	ft	ft	ft	ft	ft	ft	ft
20	160	80	40	27	20	40	10
25	250	125	63	42	25	50	12
30	360	180	90	60	30	60	15
35	490	245	123	82	35	70	17
40	640	320	160	107	40	80	20
45	1080	540	270	180	45	90	22
50	1200	600	300	200	50	100	25
55	1320	660	330	220	55	110	27
60	1440	720	360	240	60	120	30
65	1560	780	390	260	65	130	32
70	1680	840	420	280	70	140	35

* - For other offsets, use the following merging taper length formula for L:
For speed of 40 mph or less, $L = WS^2/60$
For speed of 45 mph or more, $L = WS$

Where: L = Taper length in feet
W = Width of offset in feet
S = Posted speed limit, off-peak 85th-percentile speed prior to work starting, or the anticipated operating speed in mph

** - Use for taper and tangent sections where there are no pavement markings or where there is a conflict between existing pavement markings and channelizers (CA).

TABLE 2

LONGITUDINAL BUFFER SPACE AND FLAGGER STATION SPACING

SPEED *	Min D **	DOWNGRADE Min D ***		
		-3%	-6%	-9%
mph	ft	ft	ft	ft
20	115	116	120	126
25	155	158	165	173
30	200	205	215	227
35	250	257	271	287
40	305	315	333	354
45	360	378	400	427
50	425	446	474	507
55	495	520	553	593
60	570	598	638	686
65	645	682	728	785
70	730	771	825	891

* - Speed is posted speed limit, off-peak 85th-percentile speed prior to work starting, or the anticipated operating speed in mph

** - Longitudinal buffer space or flagger station spacing

*** - Use on sustained downgrade steeper than -3 percent and longer than 1 mile.

TABLE 3

ADVANCE WARNING SIGN SPACING

ROAD TYPE	DISTANCE BETWEEN SIGNS *		
	A	B	C
	ft	ft	ft
URBAN - 25 mph OR LESS	100	100	100
URBAN - MORE THAN 25 mph TO 40 mph	250	250	250
URBAN - MORE THAN 40 mph	350	350	350
RURAL	500	500	500
EXPRESSWAY / FREEWAY	1000	1500	2640

* - The distances are approximate, are intended for guidance purposes only, and should be applied with engineering judgment. These distances should be adjusted by the Engineer for field conditions, if necessary, by increasing or decreasing the recommmended distances.

2010 REVISED STANDARD PLAN RSP T9

STATE OF CALIFORNIA
DEPARTMENT OF TRANSPORTATION

TRAFFIC CONTROL SYSTEM TABLES FOR LANE AND RAMP CLOSURES

NO SCALE

RSP T9 DATED JULY 19, 2013 SUPERSEDES RSP T9 DATED APRIL 19, 2013 THAT SUPPLEMENTS THE STANDARD PLANS BOOK DATED 2010.

REVISED STANDARD PLAN RSP T9

4-30-13

Dist	COUNTY	ROUTE	POST MILES TOTAL PROJECT	SHEET No.	TOTAL SHEETS
03	ED	89	13.8/18.0	163	164

Devinder Singh
REGISTERED CIVIL ENGINEER

October 17, 2014
PLANS APPROVAL DATE

REGISTERED PROFESSIONAL ENGINEER — Devinder Singh — No. C50470 — Exp. 6-30-15 — CIVIL — STATE OF CALIFORNIA

THE STATE OF CALIFORNIA OR ITS OFFICERS OR AGENTS SHALL NOT BE RESPONSIBLE FOR THE ACCURACY OR COMPLETENESS OF SCANNED COPIES OF THIS PLAN SHEET.

TO ACCOMPANY PLANS DATED 6-16-14

NOTES:

See Revised Standard Plan RSP T9 for tables.

Use cone spacing X for taper segment, Y for tangent segment or Z for conflict situations, as approriate, per Table 1, unless X, Y, or Z cone spacing is shown on this sheet.

Unless otherwise specified in the special provisions, all temporary warning signs shall have black legend on fluorescent orange background.

California codes are designated by (CA). Otherwise, Federal (MUTCD) codes are shown.

TYPICAL LANE CLOSURE WITH REVERSIBLE CONTROL

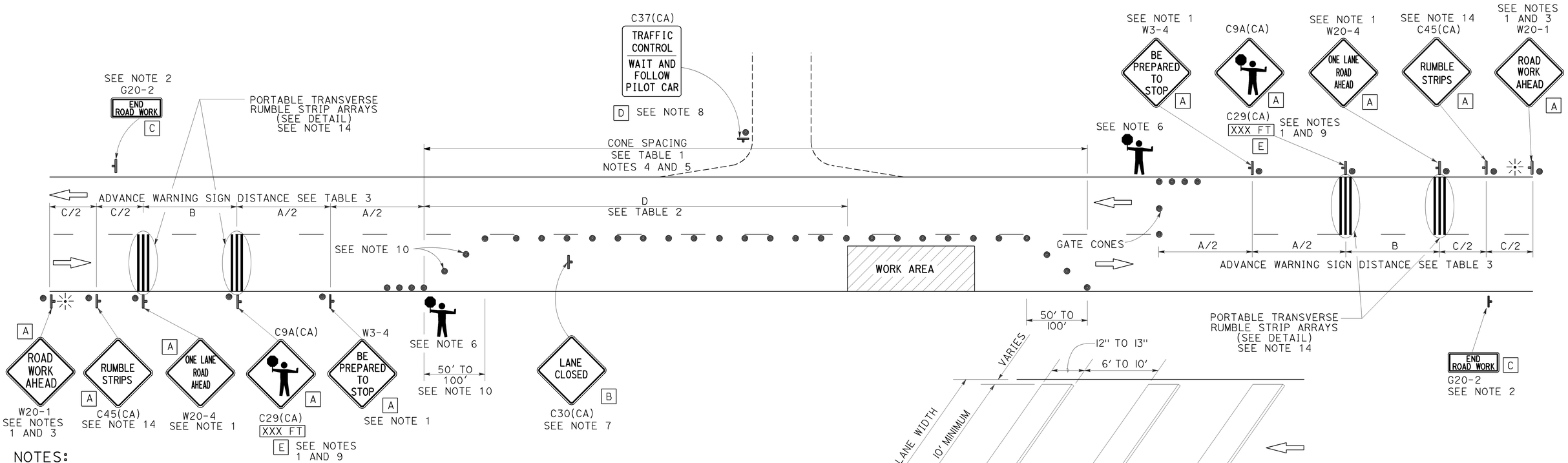

NOTES:

1. Each advance warning sign in each direction of travel shall be equipped with at least two flags for daytime closure. Each flag shall be at least 16" x 16" in size and shall be orange or fluorescent red-orange in color. Flashing beacons shall be placed at the locations indicated for lane closure during hours of darkness.
2. A G20-2 "END ROAD WORK" sign, as appropriate, shall be placed at the end of the lane control unless the end of work area is obvious, or ends within a larger project's limits.
3. If the W20-1 sign would follow within 2000' of a stationary W20-1 or G20-1 "ROAD WORK NEXT _____ MILES", use a W20-4 sign for the first advance warning sign.
4. All cones used for lane closures during the hours of darkness shall be fitted with retroreflective bands (or sleeves) as specified in the specifications.
5. Portable delineators, placed at one-half the spacing indicated for traffic cones, may be used instead of cones for daytime closures only.
6. Additional advance flaggers may be required. Flagger should stand in a conspicuous place, be visible to approaching traffic as well as approaching vehicles after the first vehicle has stopped. During the hours of darkness, the flagging-station and flagger shall be illuminated and clearly visible to approaching traffic. The illumination footprint of the lighting on the ground shall be at least 20' in diameter. Place a minimum of four cones at 50' intervals in advance of flagger station as shown.
7. Place C30(CA) "LANE CLOSED" sign at 500' to 1000' intervals throughout extended work areas. They are optional if the work area is visible from the flagger station.
8. When a pilot car is used, place a C37(CA) "TRAFFIC CONTROL-WAIT AND FOLLOW PILOT CAR" sign with black legend on white background at all intersections, driveways and alleys without a flagger within traffic control area. Signs shall be clean and visible at all times. Where traffic can not be effectively self-regulated, at least one flagger shall be used at each intersection within traffic control area.
9. An optional C29(CA) sign may be placed below the C9A(CA) sign.
10. Either traffic cones or barricades shall be placed on the taper. Barricades shall be Type I, II, or III.
11. The color of the portable transverse rumble strips shall be black or orange. Use 2 arrays, each array shall consist of 3 rumble strips.
12. Portable transverse rumble strips shall not be placed on sharp horizontal or vertical curves nor shall they be placed through pedestrian crossings.
13. If the portable transverse rumble strips become out of alignment (skewed) by more than 6 inches, measured from one end to the other, they shall be readjusted to bring the placement back to the original location.
14. Portable transverse rumble strips are not required if any one of the following conditions is satisfied:
    A. Work duration occupies a location for four hours or less
    B. Posted speed limit is below 45 MPH
    C. Work is of emergency nature
    D. Work zone is in snow or icy weather conditions

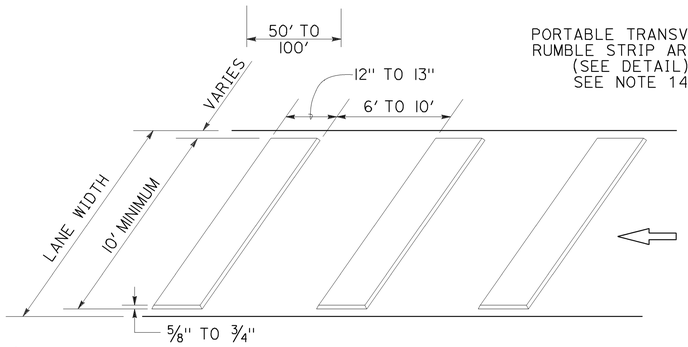

PORTABLE TRANSVERSE RUMBLE STRIP ARRAY DETAIL

LEGEND

- TRAFFIC CONE
- TEMPORARY TRAFFIC CONTROL SIGN
- PORTABLE FLASHING BEACON
- FLAGGER

SIGN PANEL SIZE (Min)

A	48" x 48"
B	30" x 30"
C	36" x 18"
D	36" x 42"
E	20" x 7"

STATE OF CALIFORNIA
DEPARTMENT OF TRANSPORTATION

TRAFFIC CONTROL SYSTEM FOR LANE CLOSURE ON TWO LANE CONVENTIONAL HIGHWAYS

NO SCALE

RSP T13 DATED OCTOBER 17, 2014 SUPERSEDES RSP T13 DATED JULY 18, 2014 AND RSP T13 DATED APRIL 19, 2013 AND STANDARD PLAN T13 DATED MAY 20, 2011 - PAGE 241 OF THE STANDARD PLANS BOOK DATED 2010.

REVISED STANDARD PLAN RSP T13

2010 REVISED STANDARD PLAN RSP T13

9-26-14

Dist	COUNTY	ROUTE	POST MILES TOTAL PROJECT	SHEET No.	TOTAL SHEETS
03	ED	89	13.8/18.0	164	164

REGISTERED CIVIL ENGINEER

April 19, 2013
PLANS APPROVAL DATE

REGISTERED PROFESSIONAL ENGINEER
Gurinderpal Bhullar
No. C48815
Exp. 9-30-14
CIVIL
STATE OF CALIFORNIA

THE STATE OF CALIFORNIA OR ITS OFFICERS OR AGENTS SHALL NOT BE RESPONSIBLE FOR THE ACCURACY OR COMPLETENESS OF SCANNED COPIES OF THIS PLAN SHEET.

TO ACCOMPANY PLANS DATED 6-16-14

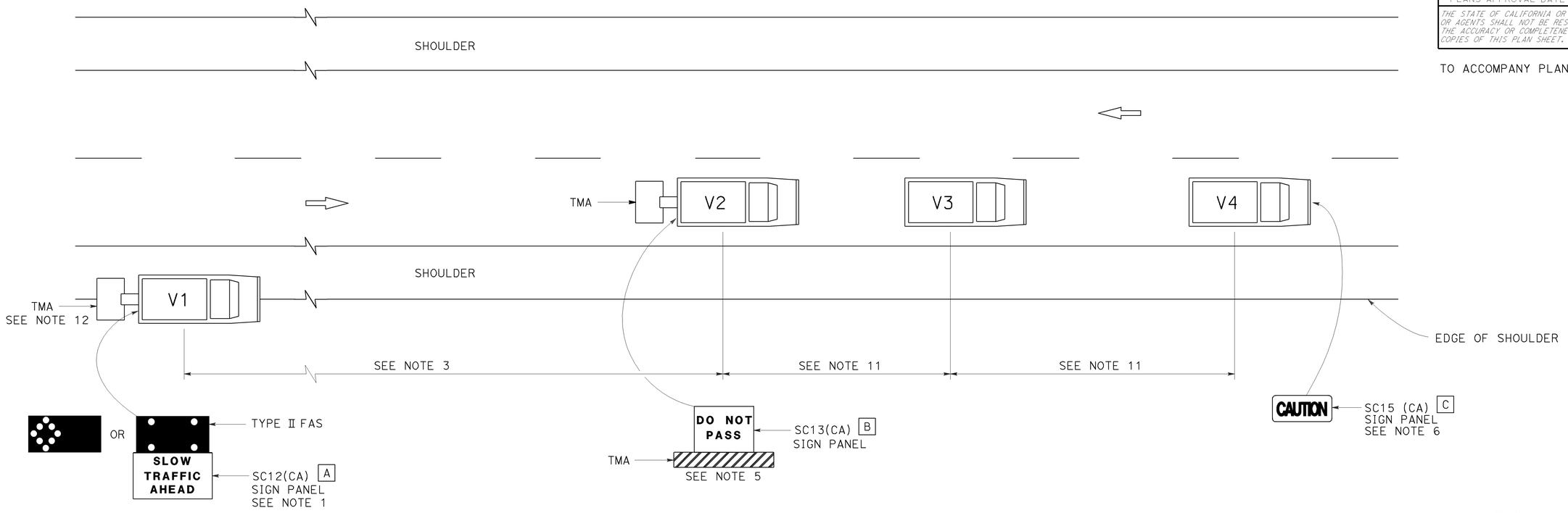

NOTES:

1. Either a changeable message sign or a SC12(CA) "SLOW TRAFFIC AHEAD" sign shall be mounted on the rear of sign vehicle V1. The changeable message sign shall be sequenced to show the "CAUTION" message first, follow by the "SLOW TRAFFIC AHEAD" message. A Type II flashing arrow sign may be used with the SC12(CA) sign panel.
2. Sign vehicle V1 should be positioned where highly visible when shoulders are not available.
3. If traffic queues develop, sign vehicle V1 should be positioned upstream from the end of queue.
4. Vehicle-mounted sign panels shall have Type III or above retroreflective sheeting, black on white, or black on fluorescent orange, with 6" minimum series D letters per Caltrans sign specifications.
5. Shadow vehicle shall be equipped with a truck-mounted attenuator. The sign panel shown shall be mounted on the rear of shadow vehicle V2. The message "LANE CLOSED" may be used in place of the "DO NOT PASS" message.
6. The sign panel shown shall be mounted on the front of sign vehicle V4, facing opposing traffic.
7. All vehicles shall be equipped with flashing or rotating amber lights.
8. Sign vehicle V4 will not be required when the work and vehicles V2 and V3 are 2′ or more from the centerline of the highway during the work or application operations.
9. All vehicles used for lane closures shall be equipped with two-way radios and the vehicle operators shall maintain communication during the work or application operation.
10. This plan shall not be used where workers would be on foot in the work area. Use a stationary type lane closure (Revised Standard Plan T13) for this condition.
11. Minimize spacing between vehicles V2 and V3 and vehicles V3 and V4 to deter road users from driving in between them.
12. If sign vehicle V1 encroaches into the traffic lane due to insufficient shoulder width, sign vehicle V1 shall be equipped with a truck-mounted attenuator. Sign vehicle V1 shall stay as close to the edge of shoulder as practicable.

LEGEND

V1	SIGN VEHICLE
V2	SHADOW VEHICLE
V3	WORK/APPLICATION VEHICLE
V4	SIGN VEHICLE
TMA	TRUCK-MOUNTED ATTENUATOR
	FLASHING ARROW SIGN (FAS) IN FLASHING CAUTION MODE
	FLASHING ARROW SIGN (FAS) IN ALTERNATING DIAMOND CAUTION

SIGN PANEL SIZE (Min)

A	72" x 42"
B	54" x 42"
C	54" x 24"

STATE OF CALIFORNIA
DEPARTMENT OF TRANSPORTATION

TRAFFIC CONTROL SYSTEM FOR MOVING LANE CLOSURE ON TWO LANE HIGHWAYS

NO SCALE

RSP T17 DATED APRIL 19, 2013 SUPERSEDES STANDARD PLAN T17
DATED MAY 20, 2011 - PAGE 245 OF THE STANDARD PLANS BOOK DATED 2010.

REVISED STANDARD PLAN RSP T17

2010 REVISED STANDARD PLAN RSP T17

12-18-12