Dist	COUNTY	ROUTE	POST MILES TOTAL PROJECT	SHEET No.	TOTAL SHEETS
03	Sac	50	R0.6/17.4	2	233

REGISTERED CIVIL ENGINEER DATE

1-4-10
PLANS APPROVAL DATE

REGISTERED PROFESSIONAL ENGINEER D. SIMMONS No. 70703 Exp. 6-30-11 CIVIL STATE OF CALIFORNIA

THE STATE OF CALIFORNIA OR ITS OFFICERS OR AGENTS SHALL NOT BE RESPONSIBLE FOR THE ACCURACY OR COMPLETENESS OF SCANNED COPIES OF THIS PLAN SHEET.

NOTES:

1. DIMENSIONS OF THE PAVEMENT STRUCTURES (STRUCTURAL SECTIONS) ARE SUBJECT TO TOLERANCES SPECIFIED IN THE STANDARD SPECIFICATIONS.
2. SUPERELEVATIONS AS SHOWN OR AS DIRECTED BY THE ENGINEER.
3. EXACT LOCATIONS AND TYPE OF HMA DIKE AND MBGR ARE SHOWN ON THE LAYOUTS AND SUMMARY OF QUANTITIES SHEETS.

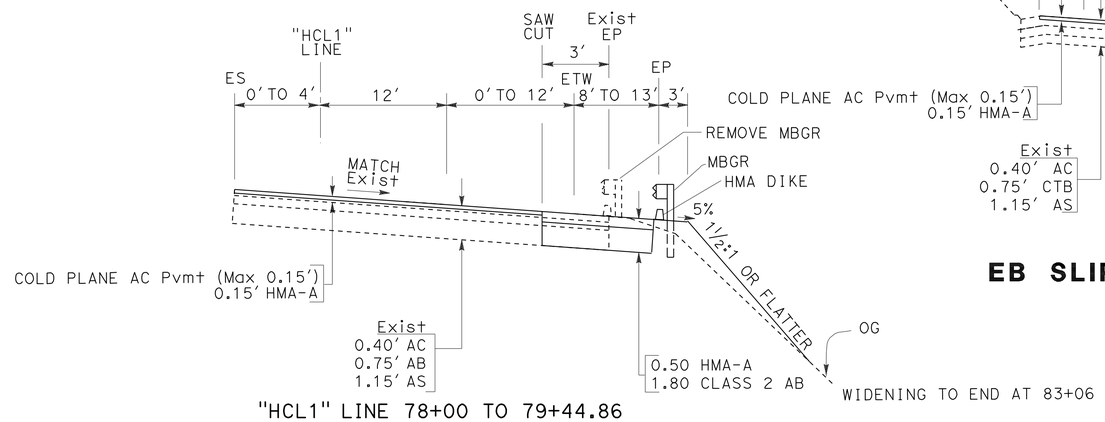

"HCL1" LINE 78+00 TO 79+44.86
"HCL1" LINE 81+09.54 TO 91+68.5

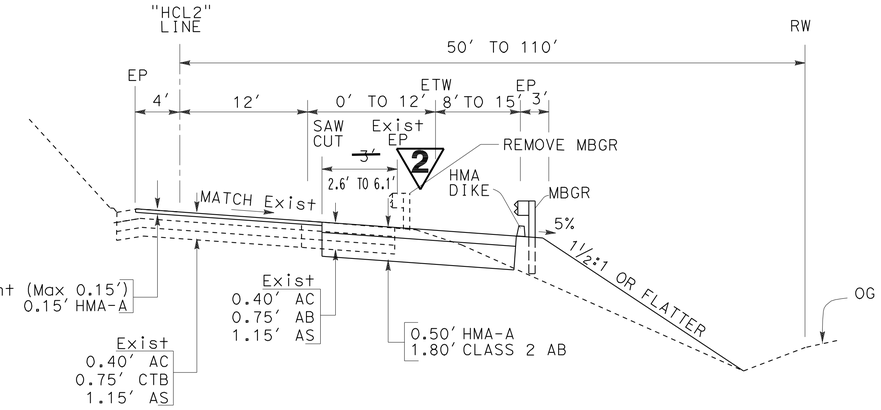

HCL2 RAMP
EB SLIP ON-RAMP AT 65th STREET

"HCL2" LINE 80+00 TO 91+51

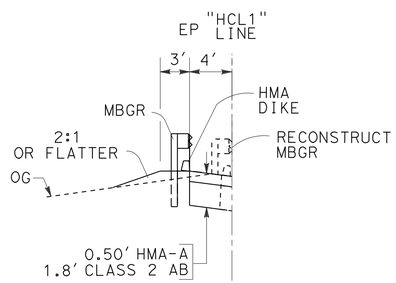

"HCL1" LINE 75+00 TO 78+00

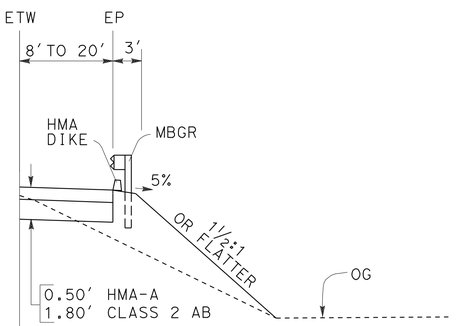

"HCL1" LINE 77+00 TO 78+00

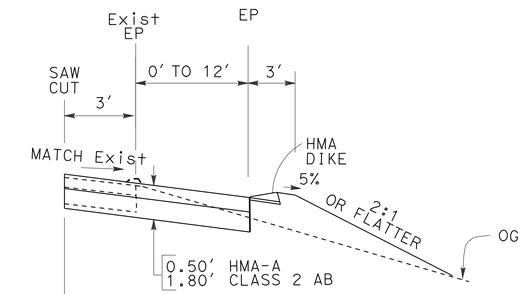

"NCL1" LINE 73+50.5 TO 74+25.5

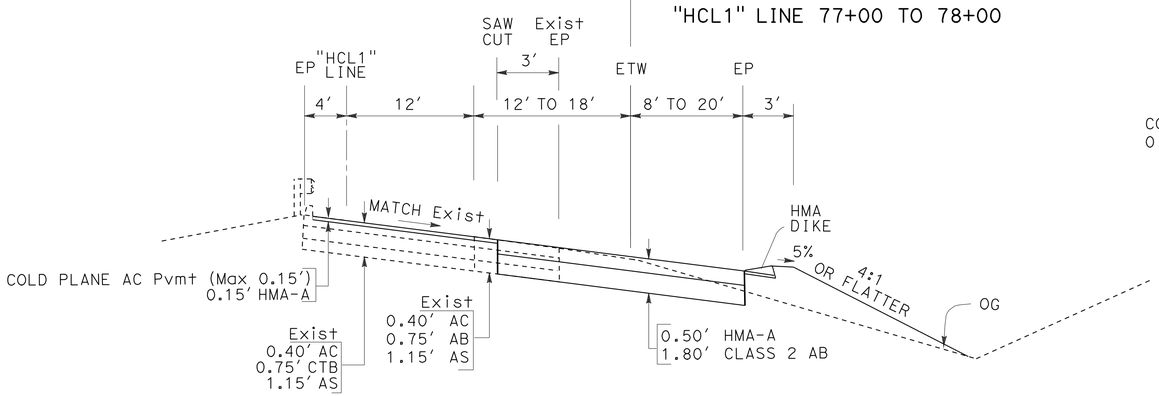

HCL1 RAMP
EB LOOP ON-RAMP AT 65th STREET

"HCL1" LINE 71+82 TO 78+00

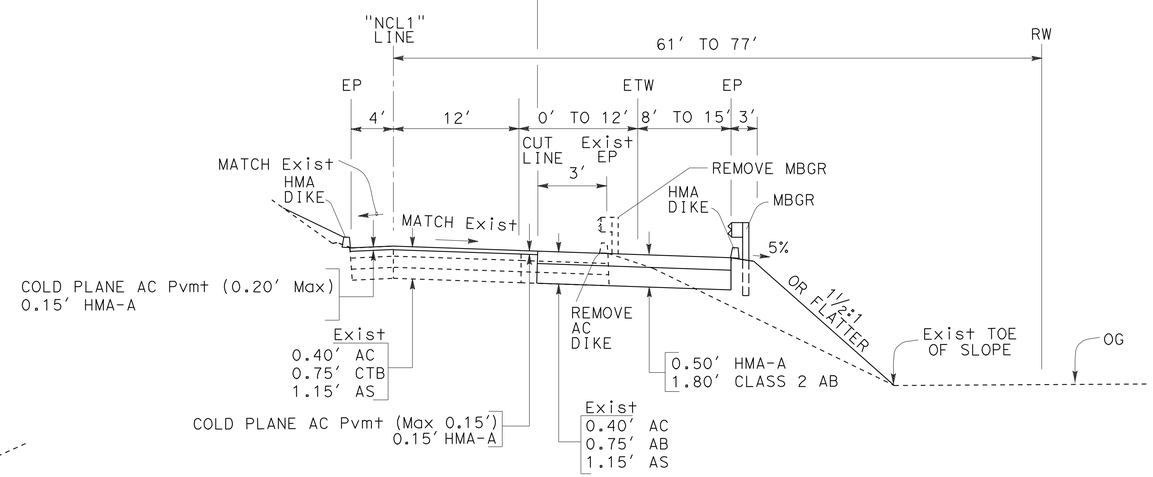

NCL1 RAMP
EB DIAGONAL ON-RAMP AT STOCKTON Blvd

"NCL1" LINE 72+43 TO 81+01

2 **REVISED PER ADDENDUM No. 2 DATED NOVEMBER 9, 2010**

TYPICAL CROSS SECTIONS

NO SCALE

X-1

STATE OF CALIFORNIA - DEPARTMENT OF TRANSPORTATION
NORTH REGION
OFFICE OF DESIGN, SOUTH
DESIGN BRANCH S13
Caltrans

FUNCTIONAL SUPERVISOR: OSCAR VASQUEZ
CALCULATED-DESIGNED BY: L. HERNANDEZ
CHECKED BY: D. SIMMONS
REVISED BY
DATE REVISED

LAST REVISION 00-00-00
DATE PLOTTED => 04-NOV-2010
TIME PLOTTED => 10:06

Dist	COUNTY	ROUTE	POST MILES TOTAL PROJECT	SHEET No.	TOTAL SHEETS
03	Sac	50	R0.6/17.4	9	233

REGISTERED CIVIL ENGINEER 8/11/09 DATE

1-4-10
PLANS APPROVAL DATE

REGISTERED PROFESSIONAL ENGINEER D. SIMMONS No. 70703 Exp. 6-30-11 CIVIL STATE OF CALIFORNIA

THE STATE OF CALIFORNIA OR ITS OFFICERS OR AGENTS SHALL NOT BE RESPONSIBLE FOR THE ACCURACY OR COMPLETENESS OF SCANNED COPIES OF THIS PLAN SHEET.

NOTE:

FOR COMPLETE RIGHT OF WAY AND ACCURATE ACCESS DATA, SEE RIGHT OF WAY RECORD MAPS AT DISTRICT OFFICE.

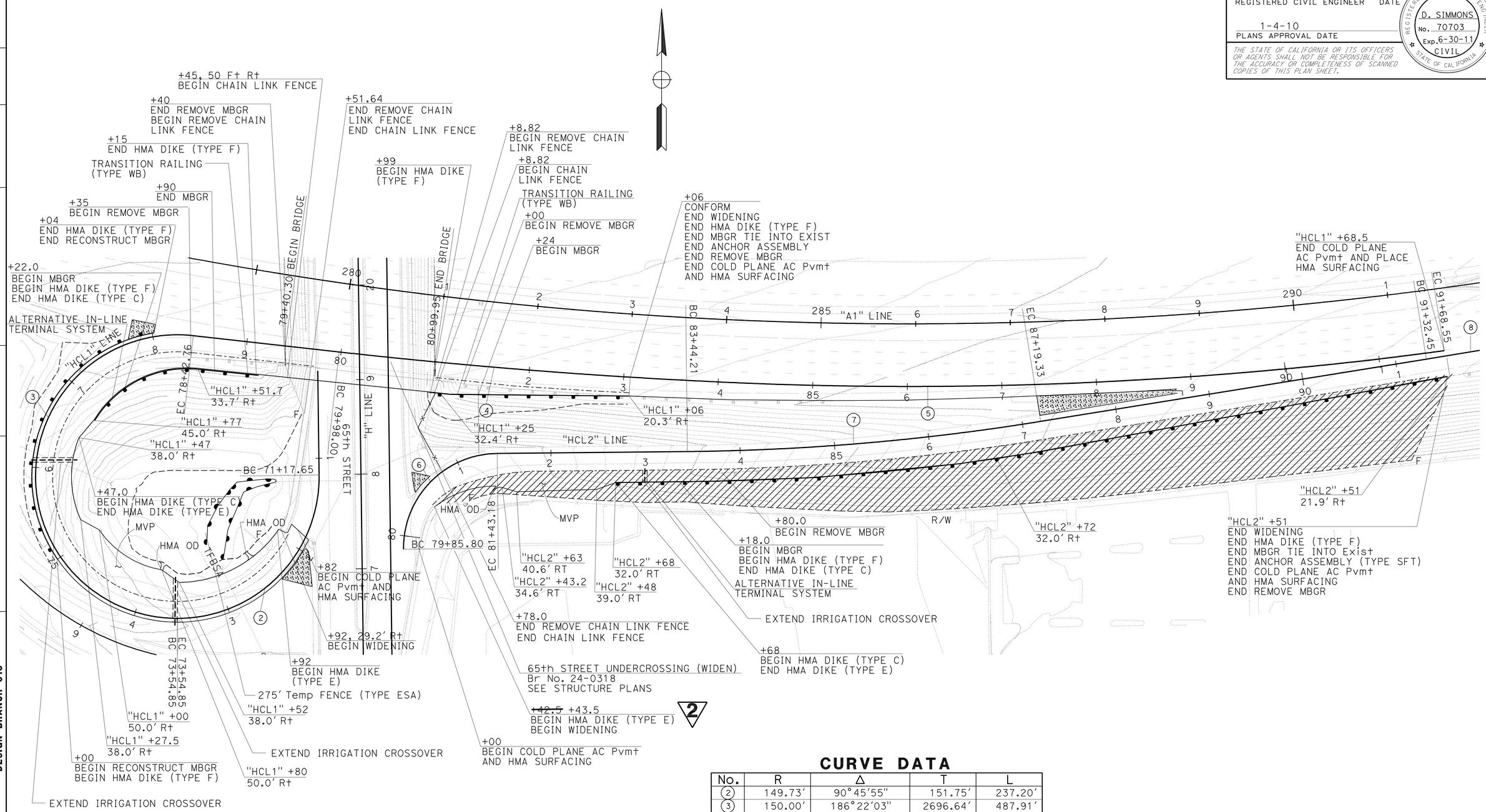

CURVE DATA

No.	R	Δ	T	L
2	149.73′	90°45′55"	151.75′	237.20′
3	150.00′	186°22′03"	2696.64′	487.91′
4	6191.21′	3°50′12"	207.37′	414.58′
5	4266.31′	9°26′21"	352.22′	702.85′
6	100.00′	90°10′19"	100.30′	157.38′
7	2499.98′	8°35′50"	187.91′	375.12′
8	6562.98′	0°51′50"	49.49′	98.97′

2 REVISED PER ADDENDUM No. 2 DATED NOVEMBER 9, 2010

65th STREET LAYOUT

SCALE: 1" = 50′

L-2

STATE OF CALIFORNIA - DEPARTMENT OF TRANSPORTATION
NORTH REGION
OFFICE OF DESIGN, SOUTH
DESIGN BRANCH S13

Caltrans

FUNCTIONAL SUPERVISOR: OSCAR VASQUEZ
CALCULATED-DESIGNED BY: D. SIMMONS
CHECKED BY: L. HERNANDEZ
REVISED BY
DATE REVISED

LAST REVISION 00-00-00
DATE PLOTTED => 04-NOV-2010
TIME PLOTTED => 10:07

BORDER LAST REVISED 4/11/2008
RELATIVE BORDER SCALE IS IN INCHES 0 1 2 3
USERNAME => trmikesl
DGN FILE => 31c12uea002.add
CU 03263
EA 1C12U1

Dist	COUNTY	ROUTE	POST MILES TOTAL PROJECT	SHEET No.	TOTAL SHEETS
03	Sac	50	R0.6/17.4	57	233

REGISTERED CIVIL ENGINEER 8/11/09 DATE

1-4-10
PLANS APPROVAL DATE

REGISTERED PROFESSIONAL ENGINEER D. SIMMONS No. 70703 Exp. 6-30-11 CIVIL STATE OF CALIFORNIA

THE STATE OF CALIFORNIA OR ITS OFFICERS OR AGENTS SHALL NOT BE RESPONSIBLE FOR THE ACCURACY OR COMPLETENESS OF SCANNED COPIES OF THIS PLAN SHEET.

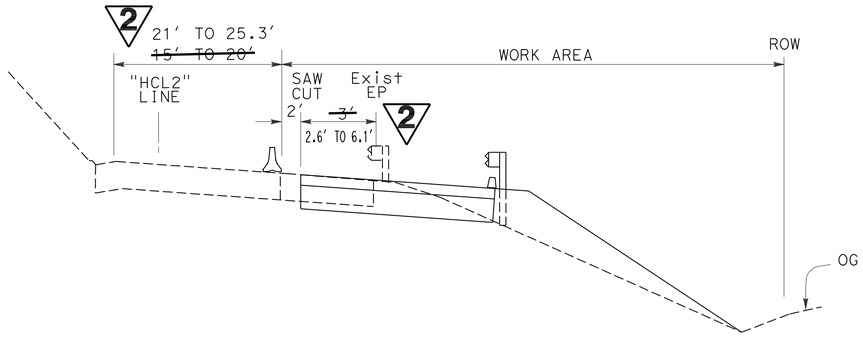

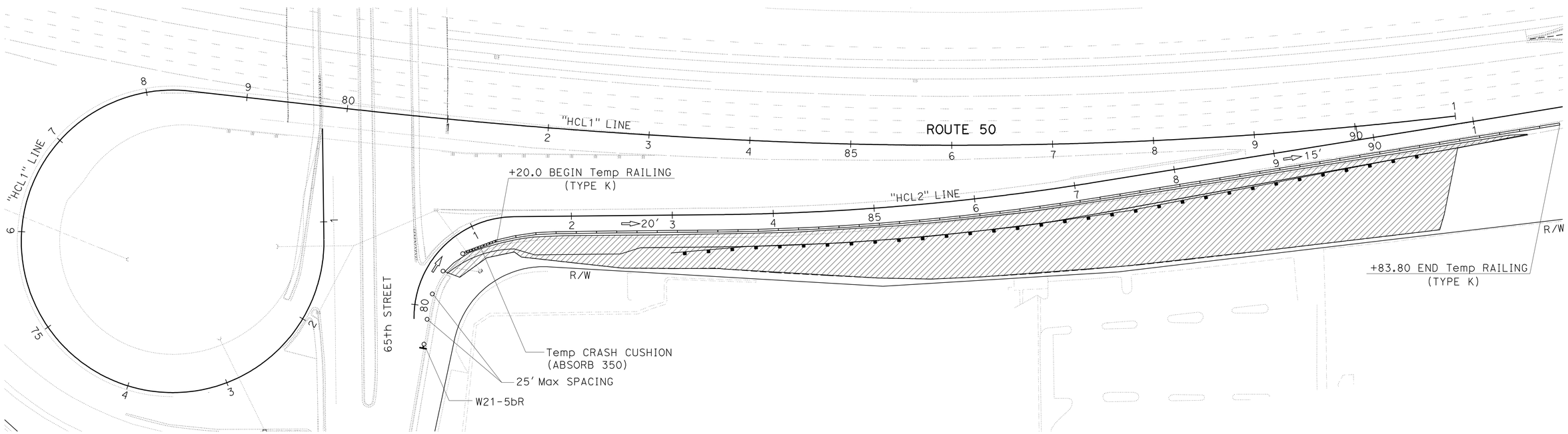

65TH SLIP
LOCATION 3

2 **REVISED PER ADDENDUM No. 2 DATED NOVEMBER 9, 2010**

THIS PLAN ACCURATE FOR STAGE CONSTRUCTION AND TRAFFIC HANDLING WORK ONLY.

STAGE 1
STAGE CONSTRUCTION AND TRAFFIC HANDLING PLAN

SCALE: 1" = 50′

SC-5

STATE OF CALIFORNIA - DEPARTMENT OF TRANSPORTATION
Caltrans
NORTH REGION
OFFICE OF DESIGN, SOUTH
DESIGN BRANCH S13

FUNCTIONAL SUPERVISOR: OSCAR VASQUEZ
CALCULATED-DESIGNED BY: L. HERNANDEZ
CHECKED BY: D. SIMMONS
REVISED BY
DATE REVISED

LAST REVISION 00-00-00
DATE PLOTTED => 04-NOV-2010
TIME PLOTTED => 12:46

Dist	COUNTY	ROUTE	POST MILES TOTAL PROJECT	SHEET No.	TOTAL SHEETS
03	Sac	50	R0.6/17.4	60	233

8/11/09
REGISTERED CIVIL ENGINEER DATE

1-4-10
PLANS APPROVAL DATE

REGISTERED PROFESSIONAL ENGINEER
D. SIMMONS
No. 70703
Exp. 6-30-11
CIVIL
STATE OF CALIFORNIA

THE STATE OF CALIFORNIA OR ITS OFFICERS OR AGENTS SHALL NOT BE RESPONSIBLE FOR THE ACCURACY OR COMPLETENESS OF SCANNED COPIES OF THIS PLAN SHEET.

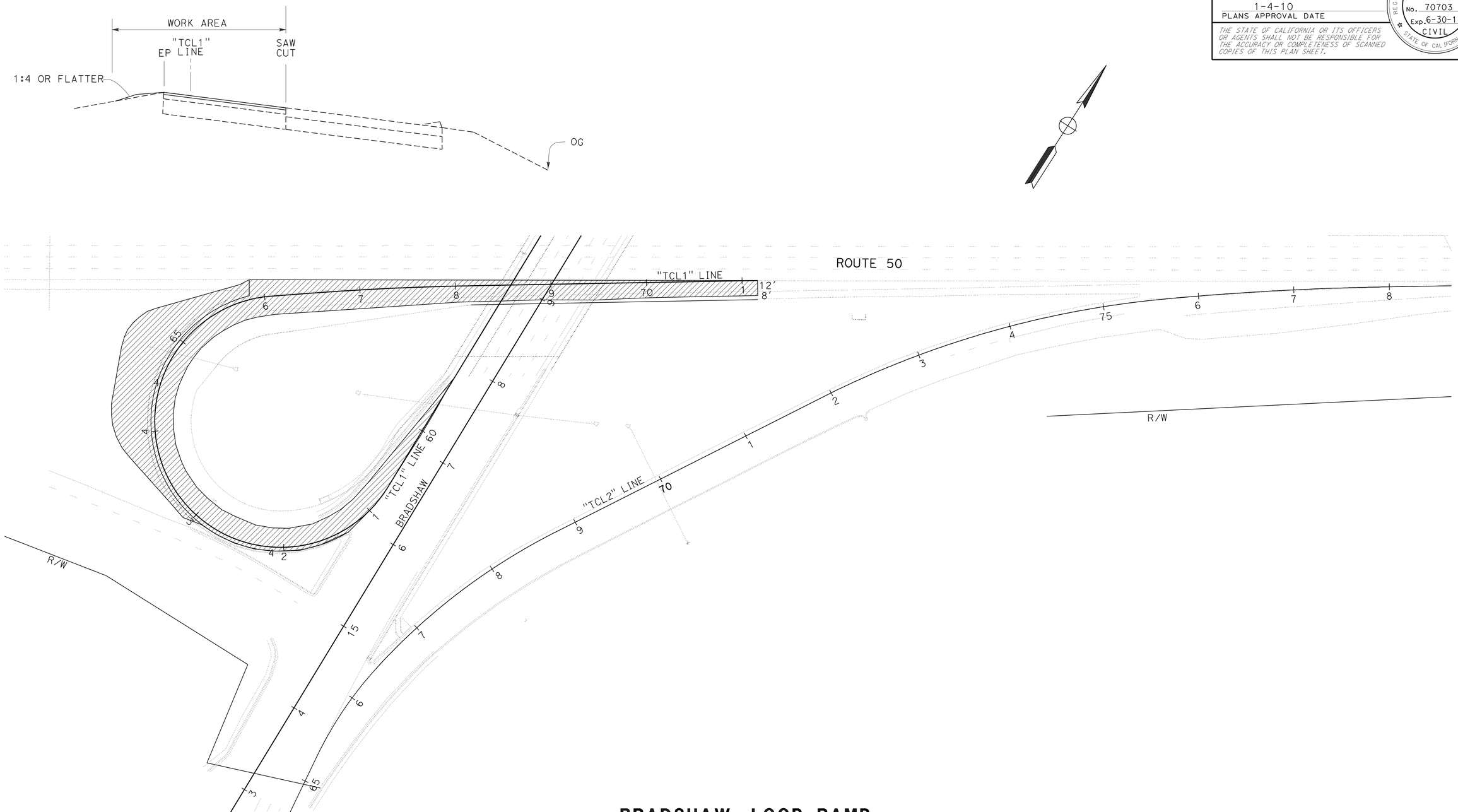

BRADSHAW LOOP RAMP
LOCATION 4

~~NOTE:~~
~~1. WEEKEND RAMP CLOSURE (55 Hr WINDOW)~~

REVISED PER ADDENDUM No. 2 DATED NOVEMBER 9, 2010

THIS PLAN ACCURATE FOR STAGE CONSTRUCTION AND TRAFFIC HANDLING WORK ONLY.

STAGE 2
STAGE CONSTRUCTION AND TRAFFIC HANDLING PLAN
SCALE: 1" = 50'

SC-8

STATE OF CALIFORNIA - DEPARTMENT OF TRANSPORTATION
NORTH REGION
OFFICE OF DESIGN, SOUTH
DESIGN BRANCH S13

FUNCTIONAL SUPERVISOR: OSCAR VASQUEZ
CALCULATED-DESIGNED BY: L. HERNANDEZ
CHECKED BY: D. SIMMONS
REVISED BY
DATE REVISED

LAST REVISION 00-00-00
DATE PLOTTED => 04-NOV-2010
TIME PLOTTED => 10:07

Dist	COUNTY	ROUTE	POST MILES TOTAL PROJECT	SHEET No.	TOTAL SHEETS
03	Sac	50	R0.6/17.4	95A	233

REGISTERED CIVIL ENGINEER DATE

1-4-10
PLANS APPROVAL DATE

REGISTERED PROFESSIONAL ENGINEER
ANDREW BUI
No. C63560
Exp. 9/30/10
CIVIL
STATE OF CALIFORNIA

THE STATE OF CALIFORNIA OR ITS OFFICERS OR AGENTS SHALL NOT BE RESPONSIBLE FOR THE ACCURACY OR COMPLETENESS OF ELECTRONIC COPIES OF THIS PLAN SHEET.

2

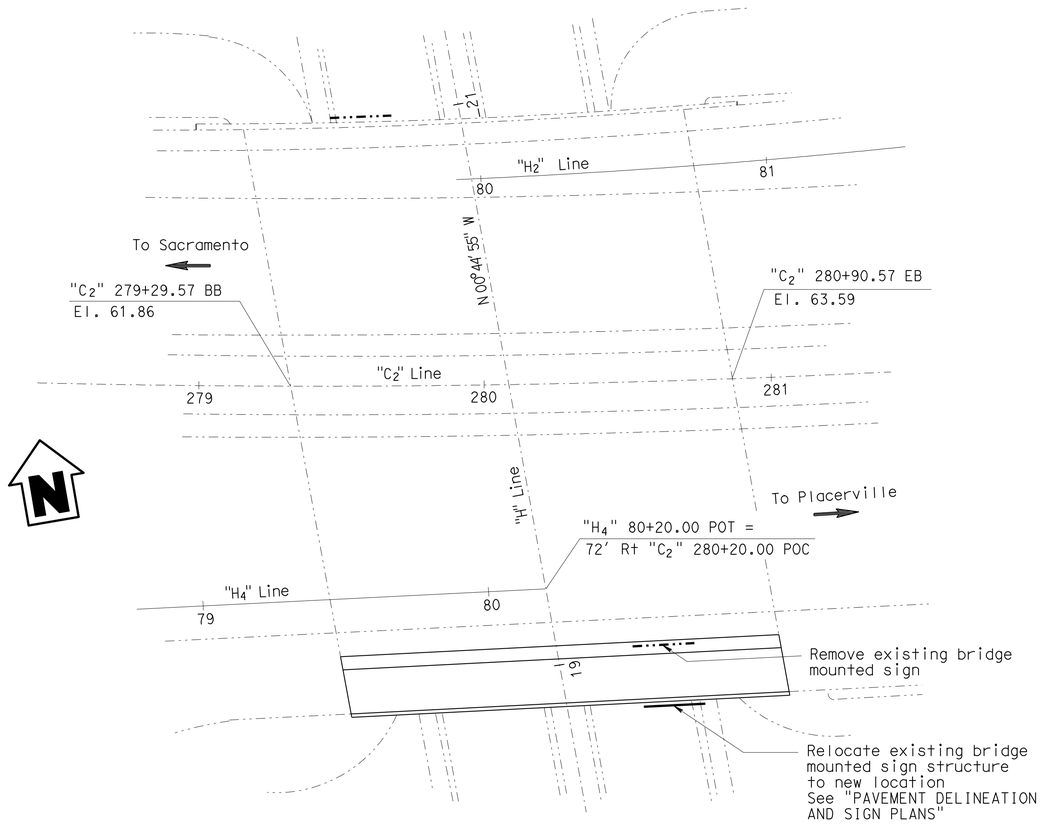

LOCATION PLAN

NOTES:

1. For details not shown, see 2006 "STANDARD PLANS".
2. All high strength (HS) bolts shall be snug tightened.
3. Structure shall be galvanized after fabrication.
4. For sign location, see "PAVEMENT DELINEATION AND SIGN PLANS".

LEGEND

Existing structure

New installations

STANDARD PLANS DATED MAY, 2006

A10A ACRONYMS AND ABBREVIATIONS (A-L)
A10B ACRONYMS AND ABBREVIATIONS (M-Z)

STANDARD PLAN SHEET NO.
DETAIL NO.

NOTE:
THE CONTRACTOR SHALL VERIFY ALL CONTROLLING FIELD DIMENSIONS BEFORE ORDERING OR FABRICATING ANY MATERIAL.

2 **ADDED PER ADDENDUM No. 2 DATED NOVEMBER 9, 2010**

65TH STREET UNDERCROSSING (WIDEN)
Bridge No. 24-0318 L
BRIDGE MOUNTED SIGN
LOCATION PLAN AND TYPICAL SECTION
NO SCALE
S-1

STATE OF CALIFORNIA - DEPARTMENT OF TRANSPORTATION
Caltrans SPECIAL DESIGNS BRANCH
FUNCTIONAL SUPERVISOR JEFF WOODY
CALCULATED-DESIGNED BY DEVANG VORA
CHECKED BY ARLENA GUTIERREZ
REVISED BY A R DUDSAK
DATE REVISED 8/3/09

LAST REVISION 1/4/08
DATE PLOTTED => 04-NOV-2010
TIME PLOTTED => 10:07

Dist	COUNTY	ROUTE	POST MILES TOTAL PROJECT	SHEET No.	TOTAL SHEETS
03	Sac	50	R0.6/17.4	95B	233

REGISTERED CIVIL ENGINEER DATE

1-4-10
PLANS APPROVAL DATE

REGISTERED PROFESSIONAL ENGINEER
ANDREW BUI
No. C63560
Exp. 9/30/10
CIVIL
STATE OF CALIFORNIA

THE STATE OF CALIFORNIA OR ITS OFFICERS OR AGENTS SHALL NOT BE RESPONSIBLE FOR THE ACCURACY OR COMPLETENESS OF ELECTRONIC COPIES OF THIS PLAN SHEET.

2

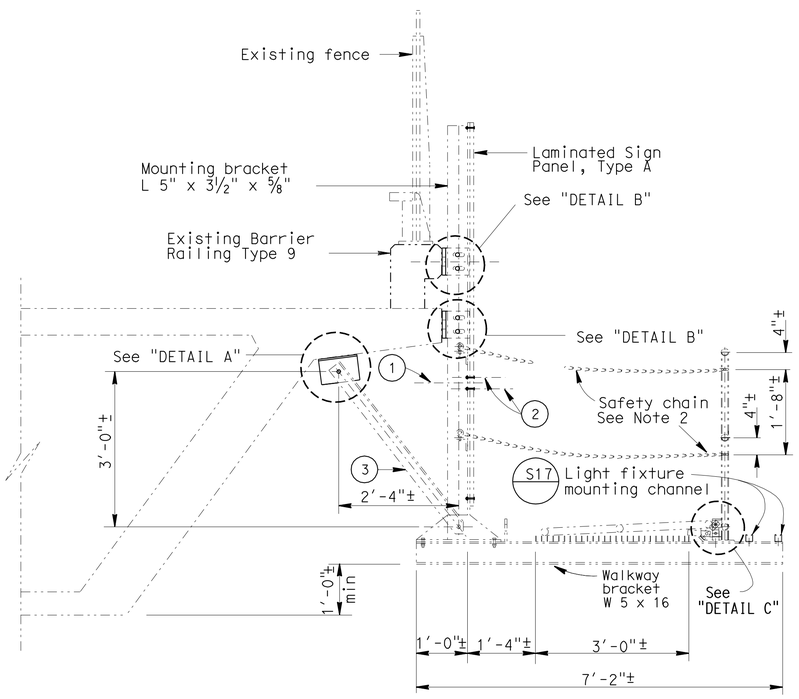

TYPICAL SECTION (Original Location)

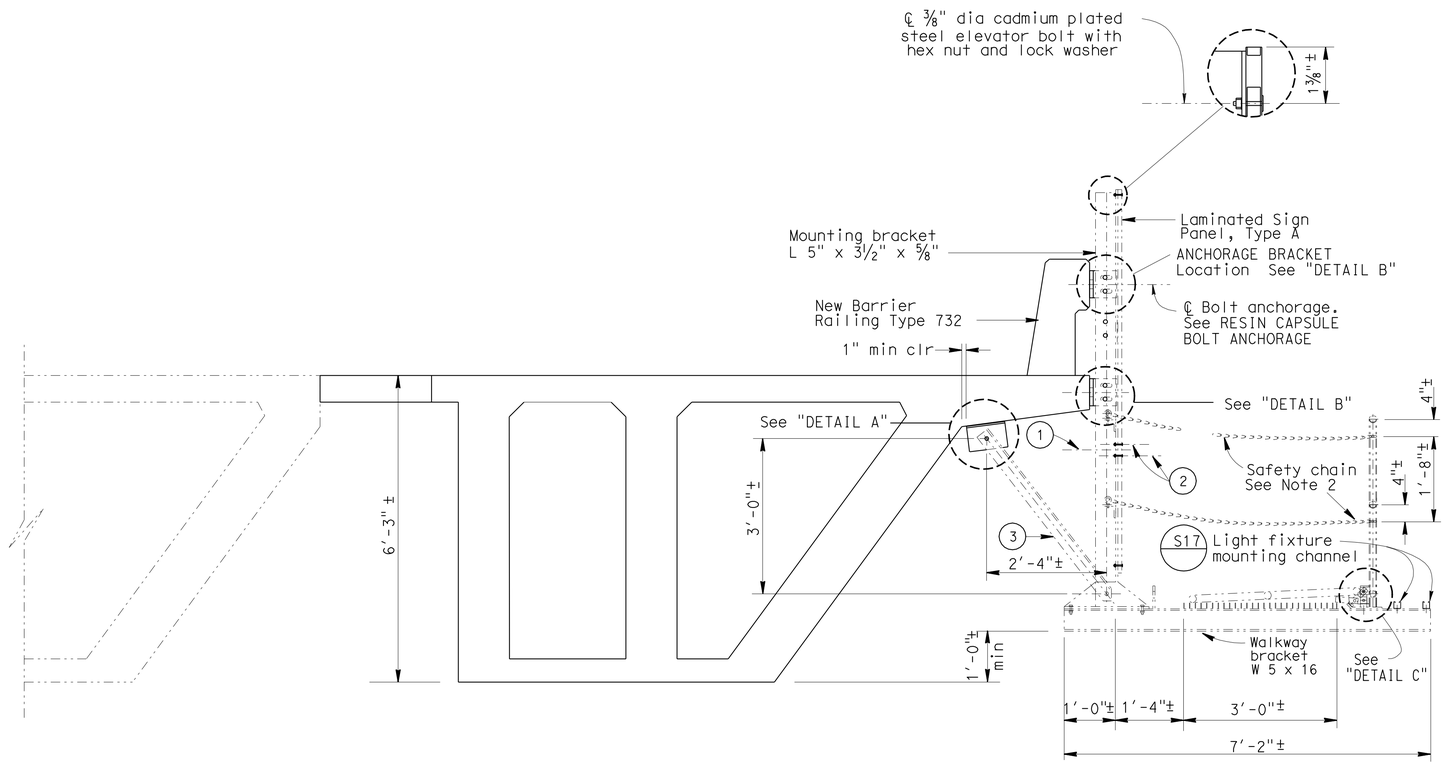

TYPICAL SECTION (New Location)

LEGEND

Existing structure

New installations

(1) ℄ Splice line. Contractor to determine location after sign delivery

(2) ℄ ⅜" dia elev head bolt

(3) L 3" x 3" x ⅜"

STANDARD PLAN SHEET NO.

DETAIL NO.

STANDARD PLANS DATED MAY, 2006

A10A ACRONYMS AND ABBREVIATIONS (A-L)
A10B

NOTE:
THE CONTRACTOR SHALL VERIFY ALL CONTROLLING FIELD DIMENSIONS BEFORE ORDERING OR FABRICATING ANY MATERIAL.

2 **ADDED PER ADDENDUM No. 2 DATED NOVEMBER 9, 2010**

65TH STREET UNDERCROSSING (WIDEN)

Bridge No. 24-0318 L

BRIDGE MOUNTED SIGN LOCATION PLAN AND TYPICAL SECTION

NO SCALE

S-2

STATE OF CALIFORNIA - DEPARTMENT OF TRANSPORTATION
Caltrans SPECIAL DESIGNS BRANCH

FUNCTIONAL SUPERVISOR: JEFF WOODY

CALCULATED-DESIGNED BY: DEVANG VORA
CHECKED BY: ARLENA GUTIERREZ

REVISED BY: A R DUDSAK
DATE REVISED: 8/3/09

LAST REVISION 8/18/09
DATE PLOTTED => 04-NOV-2010
TIME PLOTTED => 10:07

Dist	COUNTY	ROUTE	POST MILES TOTAL PROJECT	SHEET No.	TOTAL SHEETS
03	Sac	50	R0.6/17.4	95C	233

REGISTERED CIVIL ENGINEER DATE

1-4-10
PLANS APPROVAL DATE

REGISTERED PROFESSIONAL ENGINEER
ANDREW BUI
No. C63560
Exp 9/30/10
CIVIL
STATE OF CALIFORNIA

THE STATE OF CALIFORNIA OR ITS OFFICERS OR AGENTS SHALL NOT BE RESPONSIBLE FOR THE ACCURACY OR COMPLETENESS OF ELECTRONIC COPIES OF THIS PLAN SHEET.

2

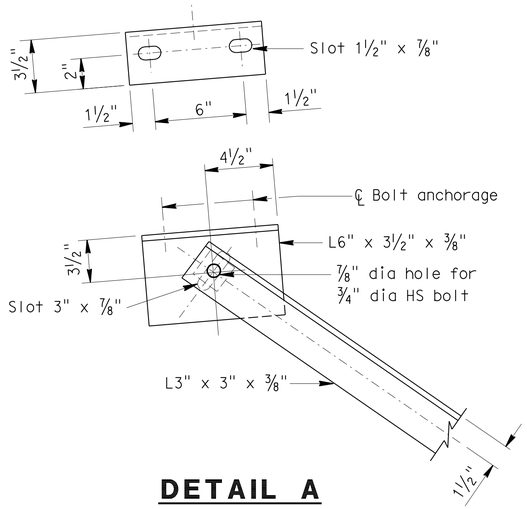

DETAIL A

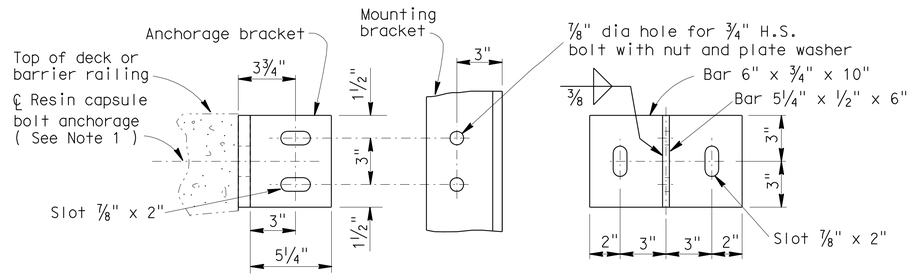

DETAIL B

NOTES:

1. Resin capsule bolts shall not interfere with existing railing anchorages.
2. Resin capsule anchorage is subject to approval of engineer. Installation procedure shall comply with manufacturer's instructions.
3. Unless otherwise shown all steel shall be galvanized after fabrication.
4. Resin capsule bolt anchors shall be installed in sound concrete free of cracks or delamination.

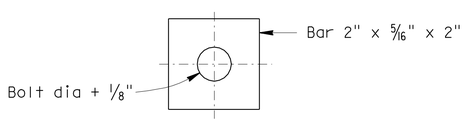

PLATE WASHER

FOR ALL SLOTTED HOLES

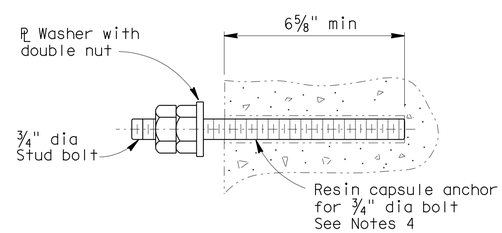

RESIN CAPSULE BOLT ANCHORAGE

NOTE:
THE CONTRACTOR SHALL VERIFY ALL CONTROLLING FIELD DIMENSIONS BEFORE ORDERING OR FABRICATING ANY MATERIAL.

2 **ADDED PER ADDENDUM No. 2 DATED NOVEMBER 9, 2010**

THIS SHEET IS FOR INSTALLATION INFORMATION PURPOSES ONLY

BRIDGE MOUNTED SIGN TYPICAL DETAILS NO. 2
NO SCALE

SD-1

STATE OF CALIFORNIA - DEPARTMENT OF TRANSPORTATION
Caltrans SPECIAL DESIGNS BRANCH

FUNCTIONAL SUPERVISOR: JEFF WOODY

CALCULATED-DESIGNED BY: DEVANG VORA
CHECKED BY: ARLENA GUTIERREZ

REVISED BY: A R DUDSAK
DATE REVISED: 8/3/09

LAST REVISION 8/18/09
DATE PLOTTED => 04-NOV-2010
TIME PLOTTED => 10:08

Dist	COUNTY	ROUTE	POST MILES TOTAL PROJECT	SHEET No.	TOTAL SHEETS
03	Sac	50	R0.6/17.4	104	233

REGISTERED CIVIL ENGINEER 8/11/09 DATE

1-4-10
PLANS APPROVAL DATE

REGISTERED PROFESSIONAL ENGINEER D. SIMMONS No. 70703 Exp. 6-30-11 CIVIL STATE OF CALIFORNIA

THE STATE OF CALIFORNIA OR ITS OFFICERS OR AGENTS SHALL NOT BE RESPONSIBLE FOR THE ACCURACY OR COMPLETENESS OF SCANNED COPIES OF THIS PLAN SHEET.

2

ROADWAY ITEMS

STATION LIMITS		HMA (TYPE A)	RUBBERIZED HOT MIX ASPHALT (OPEN GRADED)	CLASS 2 AGGREGATE BASE	COLD PLANE AC PAVEMENT (0.10 Max)	COLD PLANE AC PAVEMENT (0.15 Max)	COLD PLANE AC PAVEMENT (0.20 Max)	ROADWAY EXCAVATION	ROADWAY EXCAVATION (TYPE Y-1) (AERIALLY DEPOSTED LEAD)	IMPORTED BORROW	(N) EMBANKMENT	OBLITERATE SURFACING	GEOSYNTHETIC PAVEMENT INTERLAYER	PAVING ASPHALT (BINDER, GEOSYNTHETIC PAVEMENT INTERLAYER)	TACK COAT
	R†/L†	TON	TON	CY	SQYD	SQYD	SQYD	CY	CY	CY	CY	SQYD	SQYD	TON	TON
NCL1 72+43.00 TO NCL1 81+01.00	R†/L†	548		419		2,348	281		**435**	724	1,159		381	3.15	1.17
HCL1 71+82.00 TO HCL1 91+68.5	R†/L†	1,212		1,366		3,200		1,358		6,431	7,789		811	7.28	2.71
HCL2 80+00.00 TO HCL2 91+51.00	R†/L†	**887**		**933**		2,970			**855**	**2,752**	**3,607**		512	4.22	1.57
TCL1 59+33.00 TO TCL1 71+16.00	R†/L†	1,588		1,139		1,410		982			819		526	4.34	1.61
TCL2 64+67.00 TO TCL2 74+00.00	R†/L†	349		27		3,170		52					411	3.39	1.26
YCL1 83+55.00 TO YCL1 101+10	R†/L†	1,938		2,634		1,456		2,268			895		776	6.40	2.38
YCL2 93+00.00 TO YCL2 102+90.00	R†/L†	1,720		1,352		768		1,065			673		440	3.63	1.35
YCL1 92+69.65 TO YCL1 95+90.16	R†											323			
A1 754+90.00 TO A1 758+80.00	R†	267	196	399				520					173	1.43	0.53
A1 758+80.00 TO A1 762+45.80	R†	107	221					2,172			1,472		163	1.34	0.50
A1 762+45.80 TO A1 774+00.00	R†	1,448	678	2,163	6,027								513	4.23	1.57
R4 749+64.00 TO R4 758+75.00	R†	1,485		2,227	4,049			1,443		20,926	22,370		405	3.34	1.24
R4 753+00.00 TO R4 754+90.00	R†/L†											219			
Z1 23+75.00 TO Z1 25+40.00	L†	134	14		183								73	0.61	0.22
Z1 23+15.00 TO Z1 25+40.00	L†		66		900								100	0.83	0.31
Z1 28+65.00 TO Z1 29+65.00			1		11								44	0.37	0.14
HMA OVERSIDE DRAIN		4.41													
HMA DIKE		150.77													
GORE AREAS				612.20											
SUBTOTAL		**11,828.18**	1,176	**13,271.20**	11,170	15,322	281	9,860	**1,290**	**30,833**		542	5328	44.56	16.56
TOTAL		**11,828.18**	1,176	**13,271.20**		26,773		9,860	**1,290**	**30,833**		542	5328	44.56	16.56

(N) NOT A SEPARATE PAY ITEM, FOR INFORMATION ONLY.

SUMMARY OF QUANTITIES

2 **REVISED PER ADDENDUM No. 2 DATED NOVEMBER 9, 2010**

Q-1

STATE OF CALIFORNIA - DEPARTMENT OF TRANSPORTATION
NORTH REGION
OFFICE OF DESIGN, SOUTH
DESIGN BRANCH S13

FUNCTIONAL SUPERVISOR: OSCAR VASQUEZ
CALCULATED-DESIGNED BY: L. HERNANDEZ
CHECKED BY: D. SIMMONS
REVISED BY
DATE REVISED

LAST REVISION 00-00-00
DATE PLOTTED => 04-NOV-2010
TIME PLOTTED => 10:08

Dist	COUNTY	ROUTE	POST MILES TOTAL PROJECT	SHEET No.	TOTAL SHEETS
03	Sac	50	R0.6/17.4	107	233

Barbara Procissi
LICENSED LANDSCAPE ARCHITECT

1-4-10
PLANS APPROVAL DATE

LICENSED LANDSCAPE ARCHITECT — BARBARA PROCISSI No. 2435 — Barbara Procissi — Signature — 09-01-10 Renewal Date — Date — STATE OF CALIFORNIA

THE STATE OF CALIFORNIA OR ITS OFFICERS OR AGENTS SHALL NOT BE RESPONSIBLE FOR THE ACCURACY OR COMPLETENESS OF SCANNED COPIES OF THIS PLAN SHEET.

2

PLANT LIST AND PLANTING SPECIFICATIONS

PLANT GROUP	PLANT No.	SYMBOL	BOTANICAL NAME	COMMON NAME	SIZE	QUANTITY EACH	HOLE SIZE (INCH) Dia	HOLE SIZE (INCH) DEPTH	BASIN TYPE	IRON SULFATE ①	SOIL AMEND ①	COMMERCIAL FERTILIZER ① PLANTING	COMMERCIAL FERTILIZER ① PLT ESTB	BASIN MULCH	STAKING	PLANTING LIMITS MINIMUM DISTANCE (Ft) FROM TRVD WAY	PVMT	FENCE	WALL	PAVED DITCH	EARTH DITCH	ON CENTER (Ft)	REMARKS
A	1		ARCTOSTAPHYLOS 'EMERALD CARPET'	MANZANITA	NO. 1	73 ~~25~~	②	②	I	--	⑦	1 PKT	--	1 CU FT	--	--	8	--	--	8	10	8	GROUNDCOVER
	2		HEMEROCALLIS HYBRID 'SPELLBINDER'	DAY LILY	NO. 1	80	②	②	I	--	⑦	1 PKT	--	1 CU FT	--	--	3	--	--	3	5	3	SHRUB
	3		RHAPHIOLEPIS INDICA 'ENCHANTRESS'	INDIAN HAWTHORN	NO. 1	72 ~~26~~	②	②	I	--	⑦ ~~1 CU FT~~	1 PKT	--	1 CU FT	--	--	10	--	--	6	6	5	SHRUB
	4		ROSMARINUS OFFICINALIS 'HUNTINGTON CARPET'	ROSEMARY	NO. 1	600	②	②	I	--	⑦	1 PKT	--	1 CU FT	--	--	10	--	--	8	8	6	GROUNDCOVER
B	5		CERCIS OCCIDENTALIS	WESTERN REDBUD	NO. 5	18 ~~15~~	24"	18"	I	--	1 CU FT	3 PKT	--	2 CU FT	⑥	--	15	15	15	15	15	20	SHRUB
	6		PLATANUS ACERFOLIA 'COLUMBIA'	LONDON PLANE TREE	NO. 5	32	24"	18"	I	--	1 CU FT	3 PKT	--	2 CU FT	⑥	30	--	20	20	10	12	20	TREE
	7		QUERCUS WISLIZENII	INTERIOR LIVE OAK	NO. 5	62 ~~60~~	24"	18"	I	--	1 CU FT	3 PKT	--	2 CU FT	⑥	30	--	15	15	10	10	20	TREE

APPLICABLE WHEN CIRCLED:

① - Quantities shown are "per plant" unless shown as SQFT or SQYD application rates.
② - Sufficient to receive root ball.
3 - Does not apply to mulch areas.
4 - As shown on plans.
5 - Unless otherwise shown on plans.
⑥ - See detail.
⑦ - See Special Provisions.

MULCH AREA

VEGETATION REMOVAL (CLEARING AND GRUBBING)

NOTE:
Underlined portions of botanical name indicate abbreviations used on Planting Plans.

2 **REVISED PER ADDENDUM No. 2 DATED NOVEMBER 9, 2010**

PLANT LIST
PL-1

REVISED BY | DATE REVISED
GUY W. HOWE | BARBARA PROCISSI
CALCULATED-DESIGNED BY | CHECKED BY
SENIOR LANDSCAPE ARCHITECT | KENNETH MURRY
STATE OF CALIFORNIA - DEPARTMENT OF TRANSPORTATION
Caltrans® LANDSCAPE ARCHITECTURE

LAST REVISION 00-00-00 | DATE PLOTTED => 04-NOV-2010 | TIME PLOTTED => 10:08

Dist	COUNTY	ROUTE	POST MILES TOTAL PROJECT	SHEET No.	TOTAL SHEETS
03	Sac	50	R0.6/17.4	108	233

Barbara Procissi
LICENSED LANDSCAPE ARCHITECT

1-4-10
PLANS APPROVAL DATE

LICENSED LANDSCAPE ARCHITECT
BARBARA PROCISSI No. 2435
Barbara Procissi
Signature
09-01-10
Renewal Date
Date
STATE OF CALIFORNIA

THE STATE OF CALIFORNIA OR ITS OFFICERS OR AGENTS SHALL NOT BE RESPONSIBLE FOR THE ACCURACY OR COMPLETENESS OF SCANNED COPIES OF THIS PLAN SHEET.

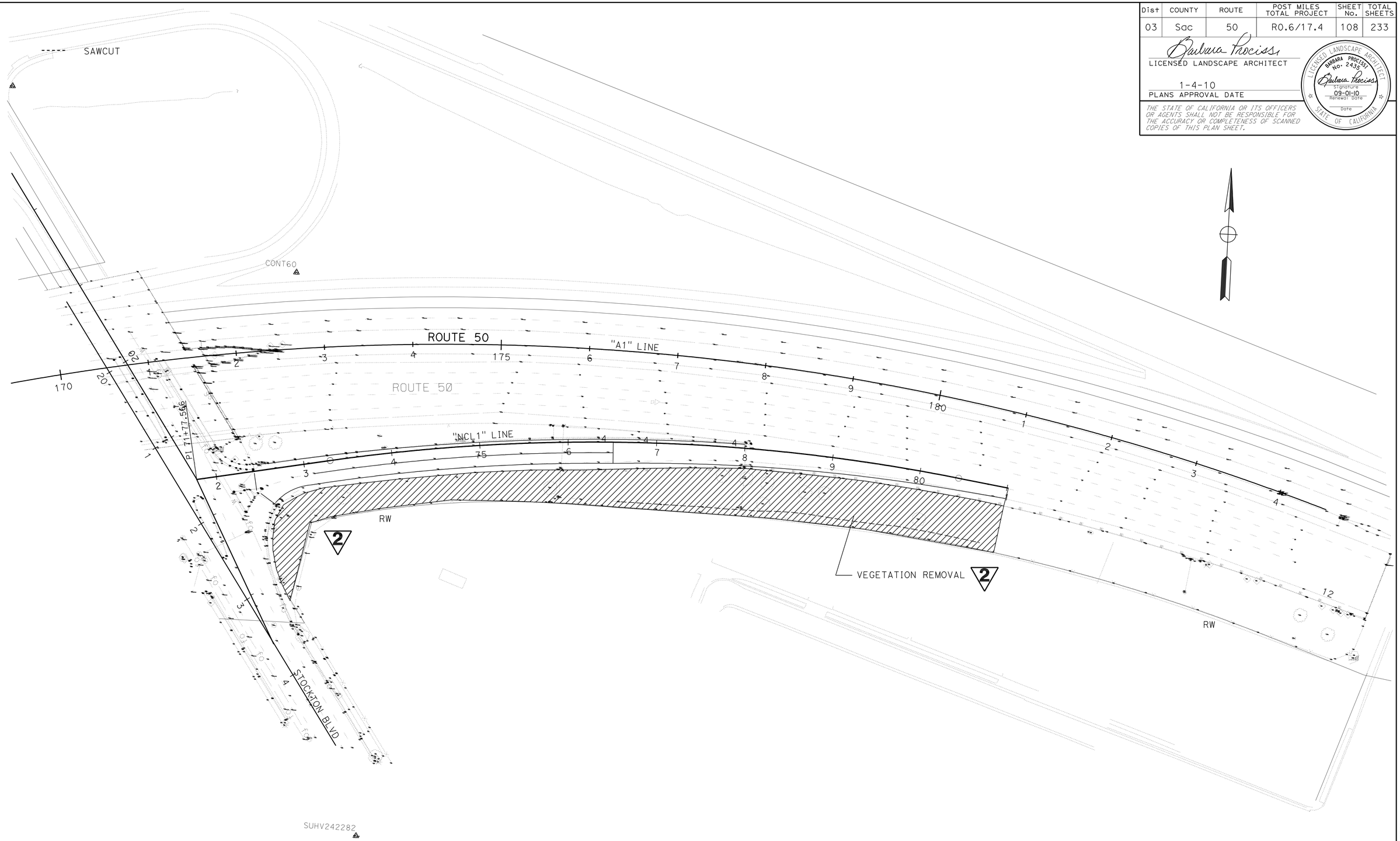

2 **REVISED PER ADDENDUM No. 2 DATED NOVEMBER 9, 2010**

THIS PLAN ACCURATE FOR PLANT REMOVAL WORK ONLY.

STOCKTON BLVD ON-RAMP PLANT REMOVAL PLAN

SCALE: 1" = 50′ **PR-1**

STATE OF CALIFORNIA - DEPARTMENT OF TRANSPORTATION
Caltrans® LANDSCAPE ARCHITECTURE

SENIOR LANDSCAPE ARCHITECT: KENNETH MURRY

CALCULATED-DESIGNED BY: GUY W. HOWE
CHECKED BY: BARBARA PROCISSI

REVISED BY
DATE REVISED

LAST REVISION 00-00-00
DATE PLOTTED => 04-NOV-2010
TIME PLOTTED => 10:08

Dist	COUNTY	ROUTE	POST MILES TOTAL PROJECT	SHEET No.	TOTAL SHEETS
03	Sac	50	R0.6/17.4	112	233

Barbara Procissi
LICENSED LANDSCAPE ARCHITECT

1-4-10
PLANS APPROVAL DATE

LICENSED LANDSCAPE ARCHITECT
BARBARA PROCISSI No. 2435
Barbara Procissi
Signature
09-01-10
Renewal Date
Date
STATE OF CALIFORNIA

THE STATE OF CALIFORNIA OR ITS OFFICERS OR AGENTS SHALL NOT BE RESPONSIBLE FOR THE ACCURACY OR COMPLETENESS OF SCANNED COPIES OF THIS PLAN SHEET.

2

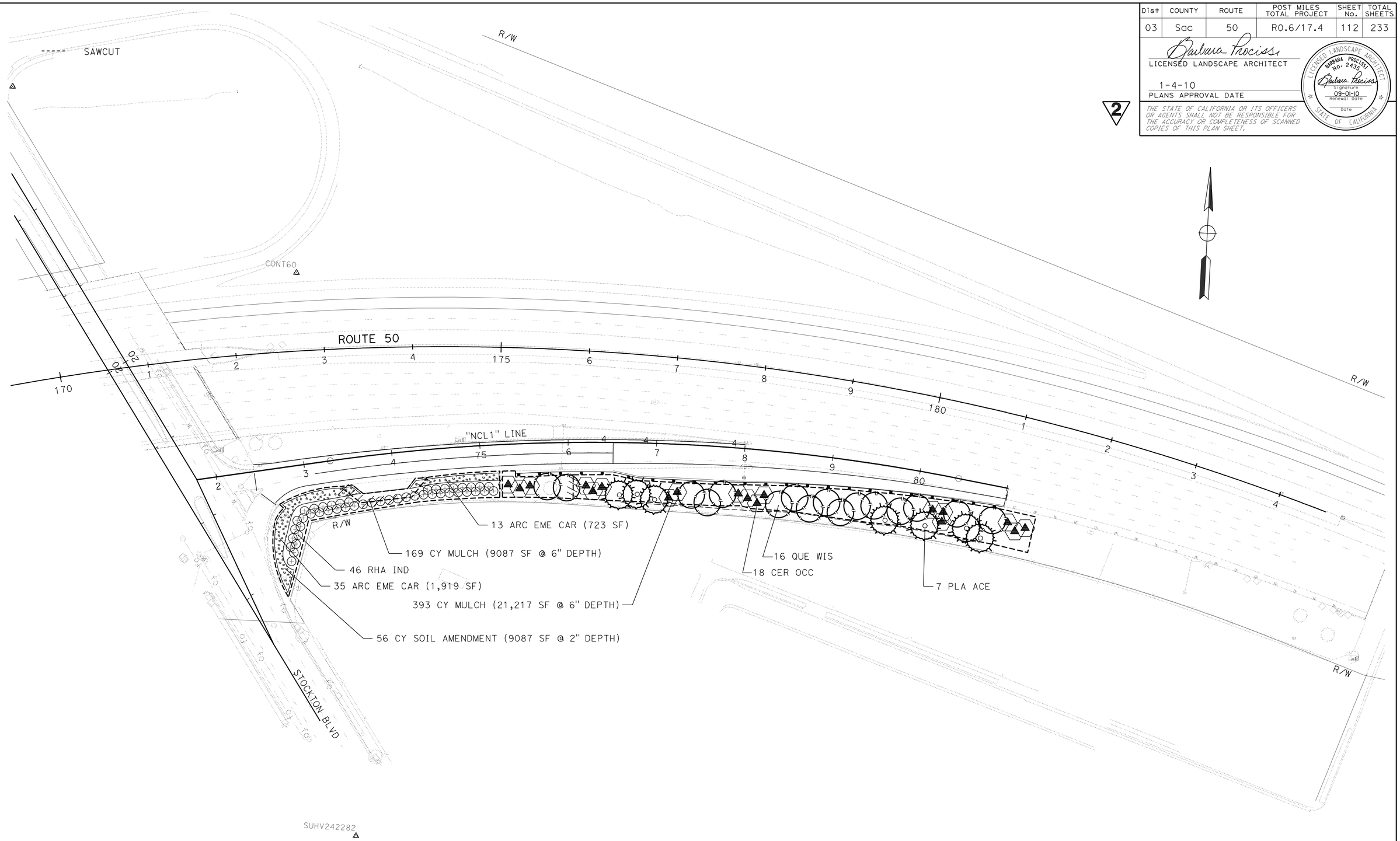

STOCKTON Blvd ON-RAMP PLANTING PLAN

SCALE: 1" = 50'

PP-1

2 **REVISED PER ADDENDUM No. 2 DATED NOVEMBER 9, 2010**

THIS PLAN ACCURATE FOR PLANTING WORK ONLY.

STATE OF CALIFORNIA - DEPARTMENT OF TRANSPORTATION
Caltrans® LANDSCAPE ARCHITECTURE

SENIOR LANDSCAPE ARCHITECT: KENNETH MURRY

CALCULATED-DESIGNED BY: GUY W. HOWE
CHECKED BY: BARBARA PROCISSI

REVISED BY
DATE REVISED

LAST REVISION 00-00-00
DATE PLOTTED => 04-NOV-2010
TIME PLOTTED => 10:08

Dist	COUNTY	ROUTE	POST MILES TOTAL PROJECT	SHEET No.	TOTAL SHEETS
03	Sac	50	R0.6/17.4	115	233

Barbara Procissi
LICENSED LANDSCAPE ARCHITECT

1-4-10
PLANS APPROVAL DATE

LICENSED LANDSCAPE ARCHITECT
BARBARA PROCISSI No. 2435
Barbara Procissi
Signature
09-01-10
Renewal Date
Date
STATE OF CALIFORNIA

THE STATE OF CALIFORNIA OR ITS OFFICERS OR AGENTS SHALL NOT BE RESPONSIBLE FOR THE ACCURACY OR COMPLETENESS OF SCANNED COPIES OF THIS PLAN SHEET.

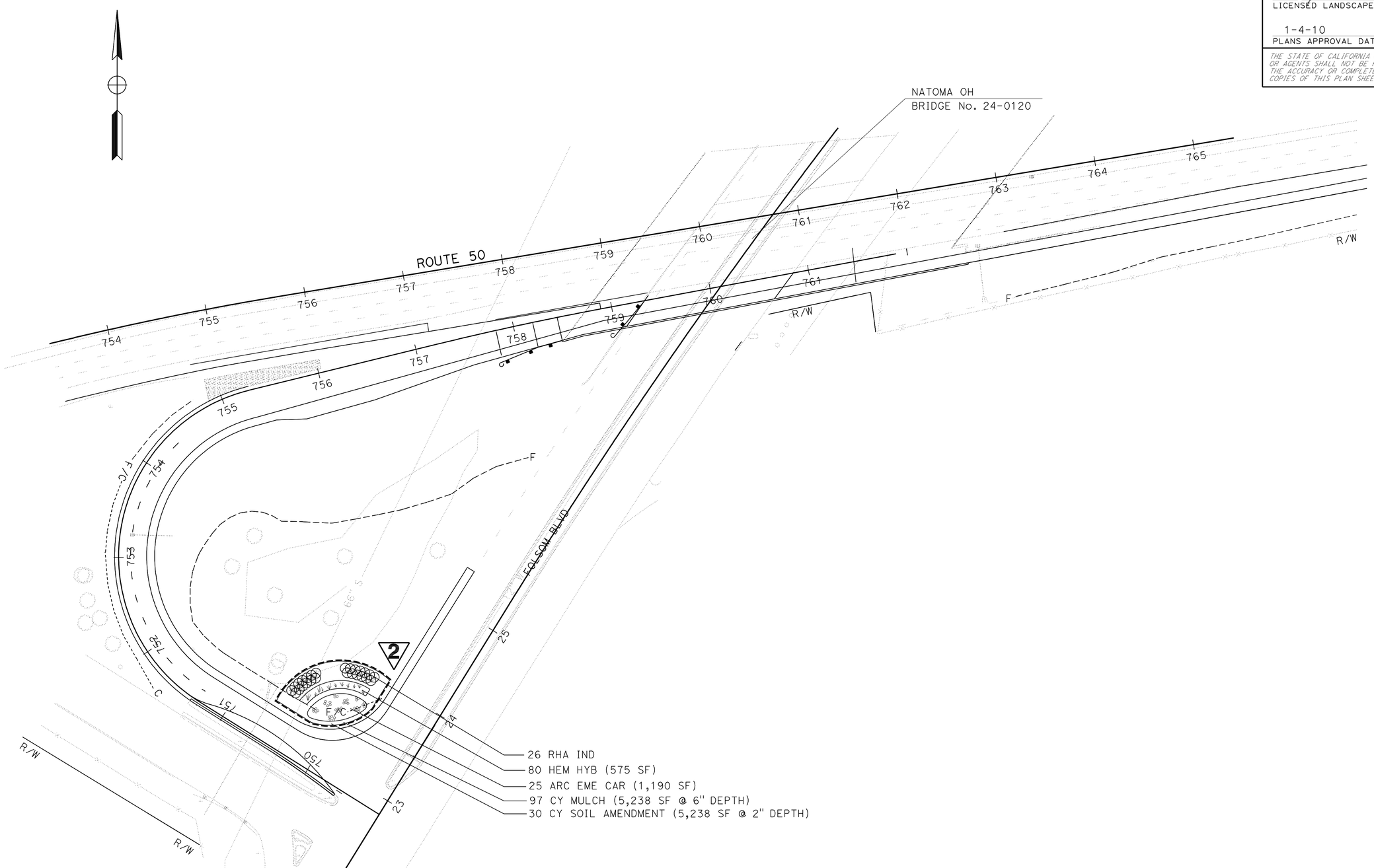

2 **REVISED PER ADDENDUM No. 2 DATED NOVEMBER 9, 2010**

THIS PLAN ACCURATE FOR PLANTING WORK ONLY.

FOLSOM Blvd ON-RAMP PLANTING PLAN

SCALE: 1" = 50'

PP-4

STATE OF CALIFORNIA - DEPARTMENT OF TRANSPORTATION
Caltrans® LANDSCAPE ARCHITECTURE

SENIOR LANDSCAPE ARCHITECT: KENNETH MURRY

CALCULATED-DESIGNED BY: GUY W. HOWE
CHECKED BY: BARBARA PROCISSI

REVISED BY
DATE REVISED

LAST REVISION 00-00-00
DATE PLOTTED => 04-NOV-2010
TIME PLOTTED => 10:08

Dist	COUNTY	ROUTE	POST MILES TOTAL PROJECT	SHEET No.	TOTAL SHEETS
03	Sac	50	R0.6/17.4	116	233

Barbara Procissi
LICENSED LANDSCAPE ARCHITECT

1-4-10
PLANS APPROVAL DATE

LICENSED LANDSCAPE ARCHITECT
BARBARA PROCISSI No. 2435
Barbara Procissi
Signature
09-01-10
Renewal Date
Date
STATE OF CALIFORNIA

THE STATE OF CALIFORNIA OR ITS OFFICERS OR AGENTS SHALL NOT BE RESPONSIBLE FOR THE ACCURACY OR COMPLETENESS OF SCANNED COPIES OF THIS PLAN SHEET.

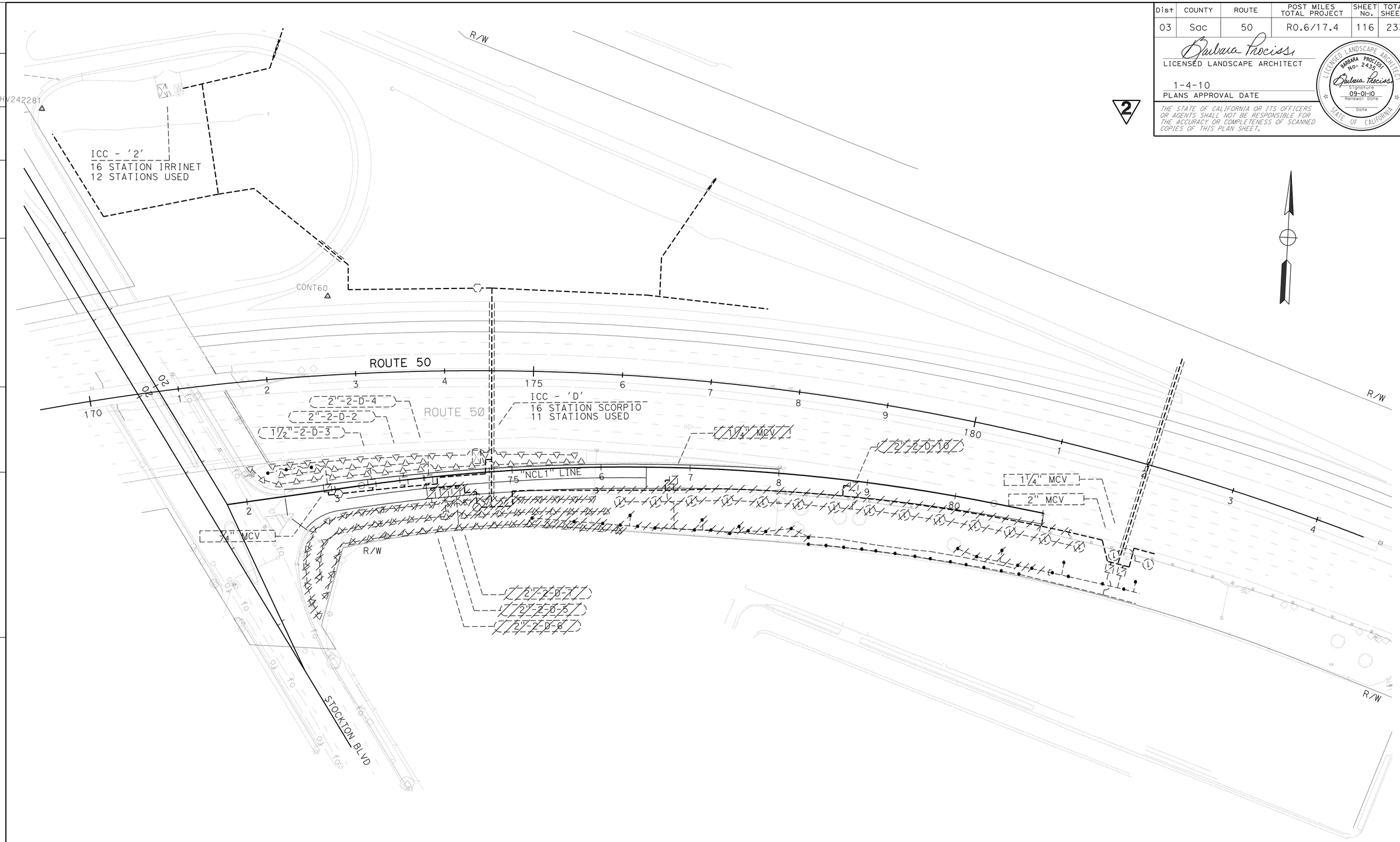

2 **REVISED PER ADDENDUM No. 2 DATED NOVEMBER 9, 2010**
THIS PLAN ACCURATE FOR IRRIGATION REMOVAL WORK ONLY.

STOCKTON Blvd ON-RAMP IRRIGATION REMOVAL PLAN

SCALE: 1" = 50'

IR-1

STATE OF CALIFORNIA - DEPARTMENT OF TRANSPORTATION
Caltrans® LANDSCAPE ARCHITECTURE

SENIOR LANDSCAPE ARCHITECT: KENNETH MURRY

CALCULATED-DESIGNED BY: GUY W. HOWE
CHECKED BY: BARBARA PROCISSI

REVISED BY
DATE REVISED

LAST REVISION 00-00-00
DATE PLOTTED => 04-NOV-2010
TIME PLOTTED => 10:09

Dist	COUNTY	ROUTE	POST MILES TOTAL PROJECT	SHEET No.	TOTAL SHEETS
03	Sac	50	R0.6/17.4	120	233

Barbara Procissi
LICENSED LANDSCAPE ARCHITECT

1-4-10
PLANS APPROVAL DATE

LICENSED LANDSCAPE ARCHITECT
BARBARA PROCISSI
No. 2435
Barbara Procissi
Signature
09-01-10
Renewal Date
Date
STATE OF CALIFORNIA

THE STATE OF CALIFORNIA OR ITS OFFICERS OR AGENTS SHALL NOT BE RESPONSIBLE FOR THE ACCURACY OR COMPLETENESS OF SCANNED COPIES OF THIS PLAN SHEET.

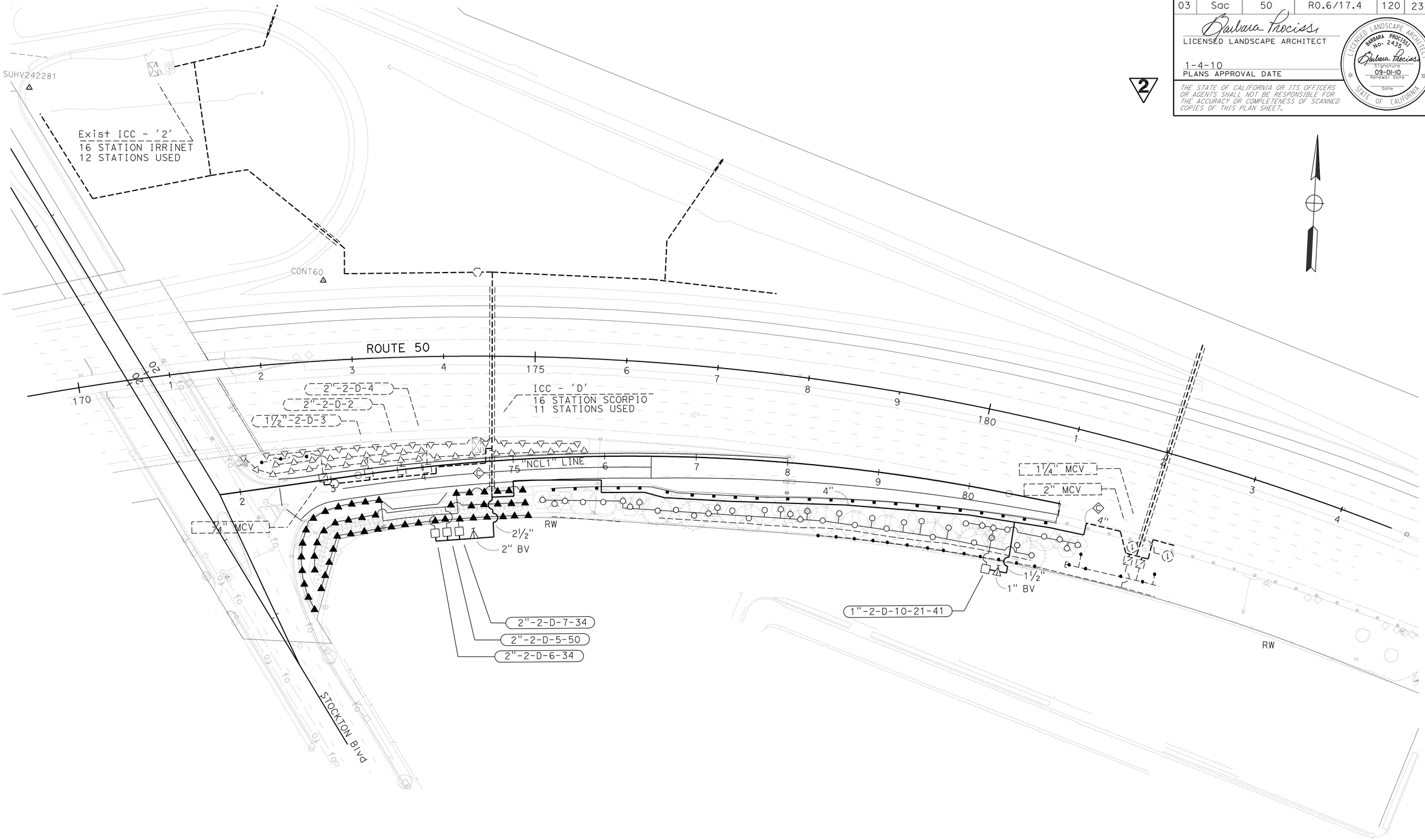

2 **REVISED PER ADDENDUM No. 2 DATED NOVEMBER 9, 2010**

THIS PLAN ACCURATE FOR IRRIGATION WORK ONLY.

STOCKTON Blvd ON-RAMP IRRIGATION PLAN

SCALE: 1" = 50' **IP-1**

STATE OF CALIFORNIA - DEPARTMENT OF TRANSPORTATION
Caltrans® LANDSCAPE ARCHITECTURE

SENIOR LANDSCAPE ARCHITECT: KENNETH MURRY

CALCULATED-DESIGNED BY: GUY W. HOWE
CHECKED BY: BARBARA PROCISSI

REVISED BY
DATE REVISED

LAST REVISION 00-00-00
DATE PLOTTED => 04-NOV-2010
TIME PLOTTED => 10:07

DIST	COUNTY	ROUTE	POST MILES TOTAL PROJECT	SHEET No	TOTAL SHEETS
03	Sac	50	R0.6/17.4	193	233

REGISTERED CIVIL ENGINEER — DATE 8-05-09

1-4-10
PLANS APPROVAL DATE

REGISTERED PROFESSIONAL ENGINEER — Jiffay Lee — No. 63599 — Exp. 9-30-10 — CIVIL — STATE OF CALIFORNIA

The State of California or its officers or agents shall not be responsible for the accuracy or completeness of electronic copies of this plan sheet.

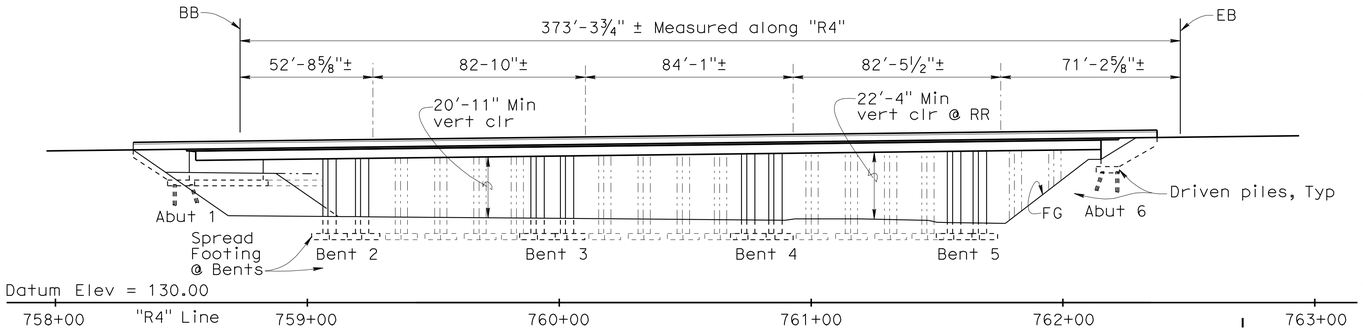

ELEVATION

1" = 30'

QUANTITIES

BRIDGE REMOVAL (PORTION), LOCATION B	LUMP	SUM
STRUCTURE EXCAVATION (BRIDGE)	707	CY
STRUCTURE BACKFILL (BRIDGE)	511	CY
FURNISH STEEL PILING (HP 10 X 57)	641	LF
DRIVE STEEL PILE (HP 10 X 57)	20	EA
STRUCTURAL CONCRETE, BRIDGE FOOTING	116	CY
STRUCTURAL CONCRETE, BRIDGE	787	CY
DRILL AND BOND DOWEL	49	LF
JOINT SEAL (ASPHALTIC PLUG)	69	LF
BAR REINFORCING STEEL (BRIDGE)	386,500	LB
BRIDGE DECK DRAINAGE SYSTEM	2,854	LB
CONCRETE BARRIER (TYPE 736)	406	LF

Notes:

1. Paint "Natoma Overhead Bridges"
2. Paint "Bridge No. 24-0120"
3. Metal beam guardrail, see "Road Plan"
4. Remove existing rail and overhang
5. AC overlay to match existing (See "Road Plan")
6. Cross slope to match existing
7. Deck drain, total 5
8. Deck elevations refer to concrete surface (2" below A.C. surface)
9. For electrical pull box locations, see "Electrical Plans"
10. See Roadway Plans for AC removal and replacement. 2

Legend:

- Closure pour
- Limits of bridge removal
- Existing Bridge
- Indicates point of minimum vertical clearance

INDEX TO PLANS

Sheet No.	Name
1	GENERAL PLAN
2	GENERAL NOTES
3	FOUNDATION PLAN
4	ABUTMENT 1 LAYOUT
5	ABUTMENT 6 LAYOUT
6	ABUTMENT DETAILS NO. 1
7	ABUTMENT DETAILS NO. 2
8	ABUTMENT DETAILS NO. 3
9	ABUTMENT DETAILS NO. 4
10	ABUTMENT DETAILS NO. 5
11	BENT DETAILS NO. 1
12	BENT DETAILS NO. 2
13	TYPICAL SECTION
14	GIRDER LAYOUT NO. 1
15	GIRDER LAYOUT NO. 2
16	GIRDER DETAILS
17	GIRDER REINFORCEMENT TOP
18	GIRDER REINFORCEMENT BOTTOM
19	ASPHALTIC PLUG JOINT SEAL DETAILS
20	DECK DRAIN DETAILS
21	LOG OF TEST BORINGS 1 OF 2
22	LOG OF TEST BORINGS 2 OF 2

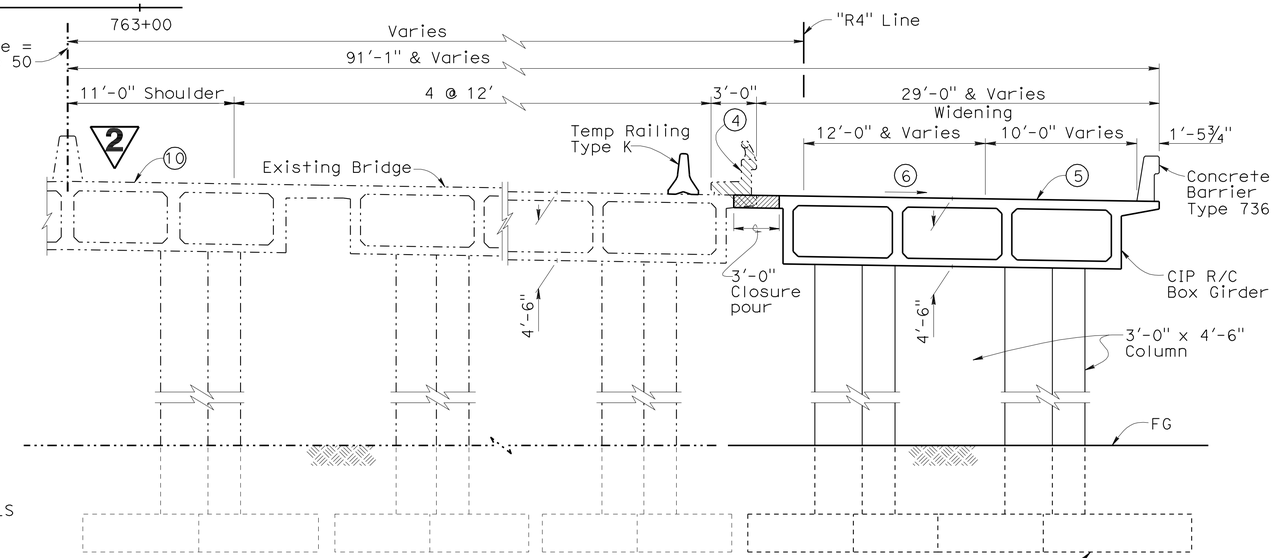

TYPICAL SECTION

1" = 5'

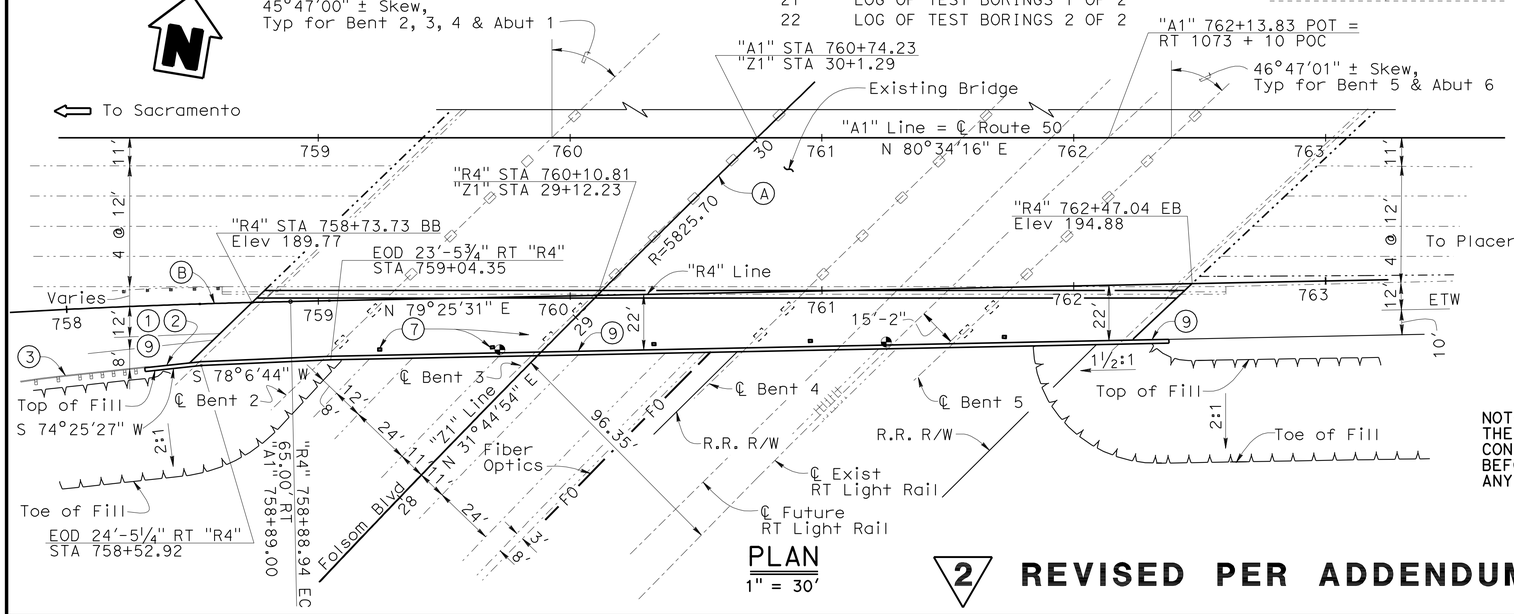

PLAN

1" = 30'

CURVE (A)	CURVE (B)
"Z1" Line	"R4" Line
R = 5825.7'	R = 3000.0'
Δ = 11°59'45"	Δ = 3°11'29"
L = 1219.70'	L = 167.10'

NOTE:
THE CONTRACTOR SHALL VERIFY ALL CONTROLLING FIELD DIMENSIONS BEFORE ORDERING OR FABRICATING ANY MATERIAL.

STANDARD PLANS DATED JULY 2006

	A10A	ACRONYMS AND ABBREVIATIONS (A-L)
	A10B	ACRONYMS AND ABBREVIATIONS (M-Z)
	A62-C	LIMITS OF PAYMENT FOR EXCAVATION AND BACKFILL BRIDGE
	B0-1	BRIDGE DETAILS
	B0-3	BRIDGE DETAILS
	B0-5	BRIDGE DETAILS
	B0-13	BRIDGE DETAILS
	B3-8	RETAINING WALL DETAILS NO. 1
	B3-9	RETAINING WALL DETAILS NO. 2
RSP	B6-21	JOINT SEALS (MAXIMUM MOVEMENT RATING=2")
	B7-1	BOX GIRDER DETAILS
	B7-6	DECK DRAINS
	B11-56	CONCRETE BARRIER TYPE 736
	B14-3	COMMUNICATION AND SPRINKLER CONTROL CONDUIT (CONDUIT LESS THAN 4")
	T3	TEMPORARY RAILING (TYPE K)

2 REVISED PER ADDENDUM No. 2 DATED NOVEMBER 9, 2010

G. Setberg
DESIGN ENGINEER

	BY	CHECKED
DESIGN	J. Lee	G. Slocum
DETAILS	C. Figuerres	G. Slocum
QUANTITIES	J. Lynch	G. Zuniga

LOAD & RESISTANCE FACTOR DESIGN — LIVE LOADING: HL93 AND P-15
LAYOUT — BY J. Lee — CHECKED G. Slocum
SPECIFICATIONS — BY D. Klein — PLANS AND SPECS COMPARED

STATE OF CALIFORNIA
DEPARTMENT OF TRANSPORTATION

DIVISION OF ENGINEERING SERVICES
STRUCTURE DESIGN
DESIGN BRANCH 2

BRIDGE NO. 24-0120R
POST MILE 17.01

NATOMA OVERHEAD (WIDEN)
GENERAL PLAN

CU 03
EA 1C12U4

ORIGINAL SCALE IN INCHES FOR REDUCED PLANS 0 1 2 3

DISREGARD PRINTS BEARING EARLIER REVISION DATES

REVISION DATES: 6-08-09 8-03-09 11-18-09 1-28-09 3-27-09 4-16-09 4-30-09 5-11-09 5-19-09

SHEET 1 OF 22

STRUCTURES DESIGN GENERAL PLAN SHEET (ENGLISH) (REV.07-24-06)

FILE => 24-0120r-a-gp01.add

USERNAME => trmikesl DATE PLOTTED => 04-NOV-2010 TIME PLOTTED => 10:09

DIST	COUNTY	ROUTE	POST MILES TOTAL PROJECT	SHEET No	TOTAL SHEETS
03	Sac	50	R0.6/17.4	205	233

REGISTERED CIVIL ENGINEER 8-05-09 DATE

1-4-10
PLANS APPROVAL DATE

REGISTERED PROFESSIONAL ENGINEER Jiffay Lee No. 63599 Exp. 9-30-10 CIVIL STATE OF CALIFORNIA

The State of California or its officers or agents shall not be responsible for the accuracy or completeness of electronic copies of this plan sheet.

FALSEWORK RELEASE

Legend:

Limits of bridge removal

Indicates existing structure

Alternative 1:

Falsework shall be released as soon as permitted by the specifications. Closure pour shall not be placed sooner than 60 days after the falsework has been released.

Alternative 2:

Falsework shall not be released less than 28 days after the last concrete has been placed. Closure pour shall not be placed sooner than 14 days after the falsework has been released.

When Falsework Release Alternative 2 is used, camber values are 0.75 times those shown.

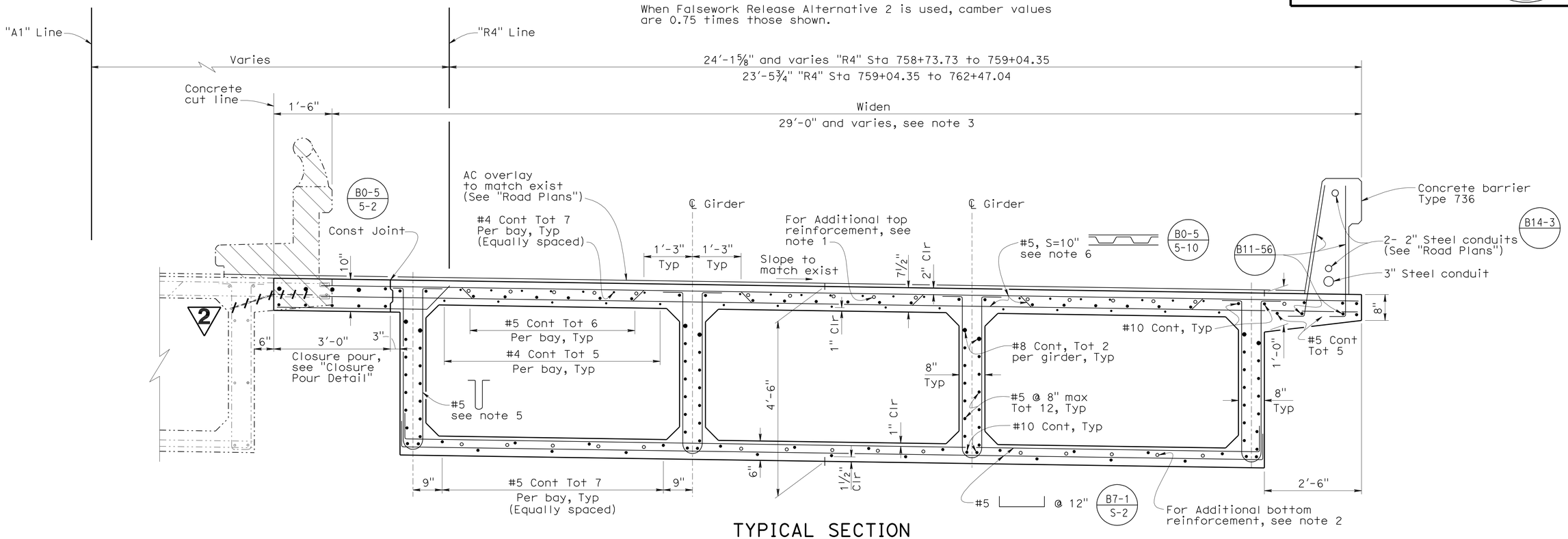

TYPICAL SECTION

¾" = 1'-0"

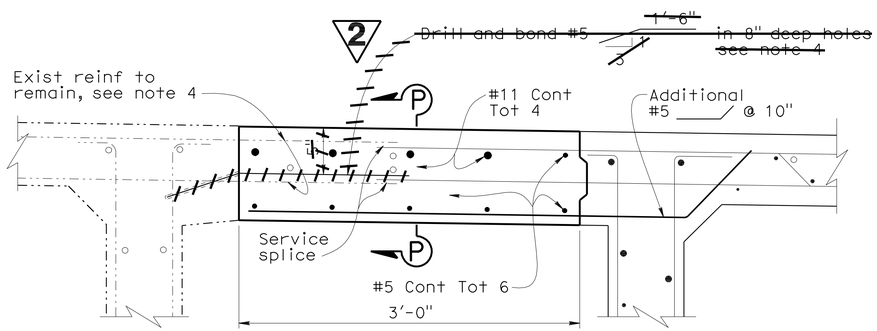

CLOSURE POUR DETAIL

1½" = 1'-0"

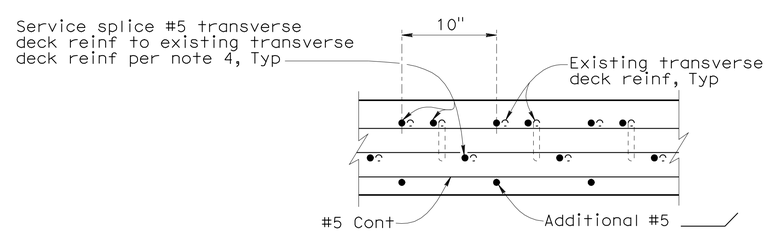

SERVICE SPLICE BAR LAYOUT

SECTION P-P

1½" = 1'-0"

Notes:

1. For Top Reinforcement, see "Girder Reinforcement Top" sheet.
2. For Bottom Reinforcement, see "Girder Reinforcement Bottom" sheet.
3. See "Girder layout" sheet.
4. Existing deck reinforcement that is to be service spliced to new deck reinforcement shall be protected during and after overhang demolition.
5. Lapped stirrups shall not be used indicated in B0-5 / 5-5
6. #5 bars. Place normal to and space along "A1" Line. Bars to be cut to fit and service spliced with every existing #5 except as shown on "Service Splice Bar Layout" detail.

NOTE:
THE CONTRACTOR SHALL VERIFY ALL CONTROLLING FIELD DIMENSIONS BEFORE ORDERING OR FABRICATING ANY MATERIAL.

2 REVISED PER ADDENDUM No. 2 DATED NOVEMBER 9, 2010

	BY	CHECKED
DESIGN	J. Lee	G. Slocum
DETAILS	C. Figuerres	G. Slocum
QUANTITIES	J. Lynch	G. Zuniga

STATE OF CALIFORNIA DEPARTMENT OF TRANSPORTATION

DIVISION OF ENGINEERING SERVICES STRUCTURE DESIGN DESIGN BRANCH 2

BRIDGE NO. 24-0120R
POST MILE 17.01

NATOMA OVERHEAD (WIDEN)

TYPICAL SECTION

STRUCTURES DESIGN DETAIL SHEET (ENGLISH) (REV. 10/25/05)

ORIGINAL SCALE IN INCHES FOR REDUCED PLANS 0 1 2 3

CU 03
EA 1C12U4

DISREGARD PRINTS BEARING EARLIER REVISION DATES

REVISION DATES: 1-30-09 4-28-09 4-30-09 5-08-09 5-14-09 6-03-09 7-28-09 8-03-09

SHEET 13 OF 22

FILE => 24-0120r-m-ts.add

USERNAME => trmikesl DATE PLOTTED => 04-NOV-2010 TIME PLOTTED => 10:09