Dist	COUNTY	ROUTE	POST MILES TOTAL PROJECT	SHEET No.	TOTAL SHEETS
03	Sac	50	R0.6/17.4	101	233

REGISTERED CIVIL ENGINEER 8/5/09 DATE

1-4-10
PLANS APPROVAL DATE

REGISTERED PROFESSIONAL ENGINEER JOSEPH C. ESTEPA No. 73684 Exp. 6-30-11 CIVIL STATE OF CALIFORNIA

THE STATE OF CALIFORNIA OR ITS OFFICERS OR AGENTS SHALL NOT BE RESPONSIBLE FOR THE ACCURACY OR COMPLETENESS OF SCANNED COPIES OF THIS PLAN SHEET.

ROADSIDE SIGN QUANTITIES (CONTINUED)

Sign Number (Sht-No)	Sign Code		Panel Size	"C" DIM in feet	Post Size and Length			Roadside Sign-One Post	Install Sign (SSBM)	Reset Roadside Sign	Remove Roadside Sign	Relocate Roadside Sign	Remove Roadside Sign (SSBM)	Remarks
	Federal	California	(Inches)		4" x 4"	4" x 6"	6" x 6"	(EA)	(EA)	(EA)	(EA)	(EA)	(EA)	
5-22	R2-1(65)	R2(65) R48-1									1			
5-23	R2-1(65)	R2(65) R48-1	48 x 60 48 x 24	5			18′	1						
5-24	W3-3	WSPEC	36 x 36 36 x 24						2					See Note 5.
6-1		S32 S32A S32-1								1				
6-2		SG49A									1			
6-3		SG49A	42 x 54	7			18′	1						
Sheet Total								2	2	1	2	0	0	
Sheet Total from SQ-1								14	8	1	7	1	0	
Sheet Total from SQ-2								10	1	2	7	1	1	
Sheet Total from SQ-3								10	3	2	9	4	3	
Sheet Total from SQ-4								10	2	0	7	0	1	
Sheet Total from SQ-5								6	3	6	3	0	7	
TOTAL								52	19	12	35	6	12	

OVERHEAD SIGN QUANTITIES

Sign Number	Relocate Sign Structure (Bridge-Mounted)
	(EA)
City #7	1
TOTAL	1

SIGN QUANTITIES

SQ-6

STATE OF CALIFORNIA - DEPARTMENT OF TRANSPORTATION
Caltrans
TRAFFIC DESIGN BRANCH SACRAMENTO

FUNCTIONAL SUPERVISOR: ERIC Y. WONG
CALCULATED-DESIGNED BY: JOSEPH C. ESTEPA
CHECKED BY:
REVISED BY:
DATE REVISED:

LAST REVISION 00-00-00
DATE PLOTTED => 04-JAN-2010
TIME PLOTTED => 17:18

Dist	COUNTY	ROUTE	POST MILES TOTAL PROJECT	SHEET No.	TOTAL SHEETS
03	Sac	50	R0.6/17.4	102	233

REGISTERED CIVIL ENGINEER 8/5/09 DATE

1-4-10
PLANS APPROVAL DATE

REGISTERED PROFESSIONAL ENGINEER JOSEPH C. ESTEPA No. 73684 Exp. 6-30-11 CIVIL STATE OF CALIFORNIA

THE STATE OF CALIFORNIA OR ITS OFFICERS OR AGENTS SHALL NOT BE RESPONSIBLE FOR THE ACCURACY OR COMPLETENESS OF SCANNED COPIES OF THIS PLAN SHEET.

Notes:

1. California Sign Codes are designated by <CA>. Otherwise, Federal Sign Codes are shown.
2. All sign panels shall be single faced.
3. Use 4"D series letters and ½" black border. See Sheet PD-5 for panel layout.

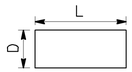

L = Length of Span
D= Depth of Span

ROADSIDE SIGN PANEL QUANTITIES (CONTRACTOR-FURNISHED)

Sign Code	Sign Message/Description	Sign Size L x D	Sign Area	Number of Signs	Background		Legend		Protective Overlay	Furnish Single Sheet Aluminum Sign		Remarks
					Sheeting Color	Retroreflective ASTM Type	Sheeting Color	Retroreflective ASTM Type	Premium	Unframed 0.063"	Unframed 0.080"	
		Inches	SQFT							SQFT	SQFT	
R2-1(65)	SPEED LIMIT 65	48 x 60	20	1	White	III	Black		X		20	
R3-1	NO RIGHT TURN (Symbol)	24 x 24	4	2	White	VII	Black Red	 VII	X	8		
R5-1	DO NOT ENTER	36 x 36	9	2	White Red	VII VII	White	VII	X	18		
R5-1a	WRONG WAY	36 x 24	6	2	Red	VII	White	VII	X	12		
R5-10a	PEDESTRIANS BICYCLES MOTOR-DRIVEN CYCLES PROHIBITED	30 x 36	8	6	White	III	Black		X	48		
R6-1L	ONE WAY (Left)	54 x 18	7	2	Black		White Black	III 	X		14	
R6-1R	ONE WAY (Right)	54 x 18	7	2	Black		White Black	III 	X		14	
R18B(Rt)<CA>	RIGHT LANE FREEWAY ONLY	36 x 36	9	1	White	III	Black		X	9		
R26S<CA>	NO STOPPING ANY TIME	12 x 18	2	2	Red White	III III	White Red	III III	X	4		
R26<CA>	NO PARKING ANY TIME	12 x 18	2	1	Red White	III III	White Red	III III	X	2		
R48-1<CA>	RADAR ENFORCED	48 x 24	8	1	White	III	Black		X		8	
R88<CA>	LEFT LANE DO NOT STOP	30 x 30	7	6	Black White	 III	White Black	III 	X	42		
R89(1)<CA>	1 CAR PER GREEN	36 x 9	3	6	White	III	Black		X	18		
R89-1(1)<CA>	1 CAR PER GREEN EACH LANE	36 x 16	4	2	White	III	Black		X	8		
R91-1<CA>	LEFT LANE CARPOOLS 2 OR MORE WHEN METERED	48 x 66	22	12	Black White	 III	White Black	III 	X		264	
							Sheet Total			169	320	

SIGN QUANTITIES

SQ-7

STATE OF CALIFORNIA - DEPARTMENT OF TRANSPORTATION
Caltrans
TRAFFIC DESIGN BRANCH SACRAMENTO

FUNCTIONAL SUPERVISOR: ERIC Y. WONG
CALCULATED-DESIGNED BY: JOSEPH C. ESTEPA
CHECKED BY: JOSEPH C. ESTEPA
REVISED BY
DATE REVISED

LAST REVISION 00-00-00
DATE PLOTTED => 04-JAN-2010
TIME PLOTTED => 17:18

Dist	COUNTY	ROUTE	POST MILES TOTAL PROJECT	SHEET No.	TOTAL SHEETS
03	Sac	50	R0.6/17.4	103	233

REGISTERED CIVIL ENGINEER 8/5/09 DATE

1-4-10
PLANS APPROVAL DATE

REGISTERED PROFESSIONAL ENGINEER JOSEPH C. ESTEPA No. 73684 Exp. 6-30-11 CIVIL STATE OF CALIFORNIA

THE STATE OF CALIFORNIA OR ITS OFFICERS OR AGENTS SHALL NOT BE RESPONSIBLE FOR THE ACCURACY OR COMPLETENESS OF SCANNED COPIES OF THIS PLAN SHEET.

ROADSIDE SIGN PANEL QUANTITIES (CONTRACTOR-FURNISHED)

Sign Code	Sign Message/Description	Sign Size L x D (Inches)	Sign Area (SQFT)	Number of Signs	Background Sheeting Color	Background Retroreflective ASTM Type	Legend Sheeting Color	Legend Retroreflective ASTM Type	Protective Overlay Premium	Furnish Single Sheet Aluminum Sign Unframed 0.063" (SQFT)	Furnish Single Sheet Aluminum Sign Unframed 0.080" (SQFT)	Remarks
W3-3	SIGNAL AHEAD (Symbol)	36 x 36	9	1	Yellow	VII	Black Red, Green	 VII	X	9		
W4-1R	MERGE (Symbol)	48 x 48	16	5	Yellow	III	Black		X		80	
W4-2R	RIGHT LANE ENDS (Symbol)	36 x 36	9	2	Yellow	III	Black		X	18		
W4-7L	THRU TRAFFIC MERGE LEFT	48 x 48	16	1	Yellow	III	Black		X		16	
W11-1	BICYCLE CROSSING (Symbol)	36 x 36	9	1	Yellow	III	Black		X	9		
W12-2(15'-2")	LOW CLEARANCE (Symbol) 15'-2"	48 x 48	16	1	Yellow	III	Black		X		16	
W1-7	TWO DIRECTIONAL ARROW (Symbol) ↔	48 x 24	8	1	Yellow	III	Black		X		8	
WSPEC<CA>	METERING WHEN FLASHING	36 x 24	6	1	Yellow	III	Black		X	6		See Note 3.
G26-2(50)<CA>	US 50 (Route Marker)	24 x 24	4	9	White	III	Black		X	36		
G26-2(50)<CA>	US 50 (Route Marker)	30 x 30	7	1	White	III	Black		X	7		
G92<CA>	FREEWAY ENTRANCE	48 x 30	10	9	Green	VII	White	VII	X		90	
M3-2	EAST	24 x 12	2	9	White	III	Black		X	18		
M3-2	EAST	30 x 15	4	1	White	III	Black		X	4		
G43<CA>	DIRECTIONAL ARROW (Symbol) ↘	21 x 15	3	5	White	III	Black		X	15		
M6-2	DIRECTIONAL ARROW (Symbol) ↙	21 x 15	3	4	White	III	Black		X	12		
SG49<CA>	TRAVEL INFO CALL 511	42 x 54	16	1	Blue	II	White	II	X	16		
Sheet Total										150	210	
Sheet Total SQ-7										169	320	
TOTAL										319	530	

SIGN QUANTITIES

SQ-8

STATE OF CALIFORNIA - DEPARTMENT OF TRANSPORTATION
Caltrans
TRAFFIC DESIGN BRANCH SACRAMENTO

FUNCTIONAL SUPERVISOR: ERIC Y. WONG
CALCULATED-DESIGNED BY: JOSEPH C. ESTEPA
CHECKED BY: JOSEPH C. ESTEPA
REVISED BY
DATE REVISED

LAST REVISION 00-00-00
DATE PLOTTED => 04-JAN-2010
TIME PLOTTED => 17:18

Dist	COUNTY	ROUTE	POST MILES TOTAL PROJECT	SHEET No.	TOTAL SHEETS
03	Sac	50	R0.6/17.4	104	233

REGISTERED CIVIL ENGINEER 8/11/09 DATE

1-4-10
PLANS APPROVAL DATE

REGISTERED PROFESSIONAL ENGINEER D. SIMMONS No. 70703 Exp. 6-30-11 CIVIL STATE OF CALIFORNIA

THE STATE OF CALIFORNIA OR ITS OFFICERS OR AGENTS SHALL NOT BE RESPONSIBLE FOR THE ACCURACY OR COMPLETENESS OF SCANNED COPIES OF THIS PLAN SHEET.

ROADWAY ITEMS

STATION LIMITS		HMA (TYPE A)	RUBBERIZED HOT MIX ASPHALT (OPEN GRADED)	CLASS 2 AGGREGATE BASE	COLD PLANE AC PAVEMENT (0.10 Max)	COLD PLANE AC PAVEMENT (0.15 Max)	COLD PLANE AC PAVEMENT (0.20 Max)	ROADWAY EXCAVATION	ROADWAY EXCAVATION (TYPE Y-1) (AERIALLY DEPOSTED LEAD)	IMPORTED BORROW	(N) EMBANKMENT	OBLITERATE SURFACING	GEOSYNTHETIC PAVEMENT INTERLAYER	PAVING ASPHALT (BINDER, GEOSYNTHETIC PAVEMENT INTERLAYER)	TACK COAT
	R†/L†	TON	TON	CY	SQYD	SQYD	SQYD	CY	CY	CY	CY	SQYD	SQYD	TON	TON
NCL1 72+43.00 TO NCL1 81+01.00	R†/L†	548		419		2,348	281		845	724	1,159		381	3.15	1.17
HCL1 71+82.00 TO HCL1 91+68.5	R†/L†	1,212		1,366		3,200		1,358		6,431	7,789		811	7.28	2.71
HCL2 80+00.00 TO HCL2 91+51.00	R†/L†	1,052		13,667		2,970			2,402	1,394	2,758		512	4.22	1.57
TCL1 59+33.00 TO TCL1 71+16.00	R†/L†	1,588		1,139		1,410		982			819		526	4.34	1.61
TCL2 64+67.00 TO TCL2 74+00.00	R†/L†	349		27		3,170		52					411	3.39	1.26
YCL1 83+55.00 TO YCL1 101+10	R†/L†	1,938		2,634		1,456		2,268			895		776	6.40	2.38
YCL2 93+00.00 TO YCL2 102+90.00	R†/L†	1,720		1,352		768		1,065			673		440	3.63	1.35
YCL1 92+69.65 TO YCL1 95+90.16	R†											323			
A1 754+90.00 TO A1 758+80.00	R†	267	196	399				520					173	1.43	0.53
A1 758+80.00 TO A1 762+45.80	R†	107	221					2,172			1,472		163	1.34	0.50
A1 762+45.80 TO A1 774+00.00	R†	1,448	678	2,163	6,027								513	4.23	1.57
R4 749+64.00 TO R4 758+75.00	R†	1,485		2,227	4,049			1,443		20,926	22,370		405	3.34	1.24
R4 753+00.00 TO R4 754+90.00	R†/L†											219			
Z1 23+75.00 TO Z1 25+40.00	L†	134	14		183								73	0.61	0.22
Z1 23+15.00 TO Z1 25+40.00	L†		66		900								100	0.83	0.31
Z1 28+65.00 TO Z1 29+65.00			1		11								44	0.37	0.14
HMA OVERSIDE DRAIN		4.41													
HMA DIKE		150.77													
GORE AREAS				612.20											
SUBTOTAL		12,003.18	1,176	26,005.20	11,170	15,322	281	9,860	3,247	29,475	37,935	542	5328	44.56	16.56
TOTAL		12,003.18	1,176	26,005.20	26,773			9,860	3,247	29,475	37,935	542	5328	44.56	16.56

(N) NOT A SEPARATE PAY ITEM, FOR INFORMATION ONLY.

SUMMARY OF QUANTITIES

Q-1

STATE OF CALIFORNIA - DEPARTMENT OF TRANSPORTATION
Caltrans
NORTH REGION
OFFICE OF DESIGN, SOUTH
DESIGN BRANCH S13

FUNCTIONAL SUPERVISOR: OSCAR VASQUEZ
CALCULATED-DESIGNED BY: L. HERNANDEZ
CHECKED BY: D. SIMMONS
REVISED BY
DATE REVISED

LAST REVISION 00-00-00
DATE PLOTTED => 11-JAN-2010
TIME PLOTTED => 12:20

Dist	COUNTY	ROUTE	POST MILES TOTAL PROJECT	SHEET No.	TOTAL SHEETS
03	Sac	50	R0.6/17.4	105	233

REGISTERED CIVIL ENGINEER 8/11/09 DATE

1-4-10
PLANS APPROVAL DATE

REGISTERED PROFESSIONAL ENGINEER D. SIMMONS No. 70703 Exp. 6-30-11 CIVIL STATE OF CALIFORNIA

THE STATE OF CALIFORNIA OR ITS OFFICERS OR AGENTS SHALL NOT BE RESPONSIBLE FOR THE ACCURACY OR COMPLETENESS OF SCANNED COPIES OF THIS PLAN SHEET.

METAL BEAM GUARD RAILING

STATION LIMITS	LOCATION	MBGR	REMOVE MBGR	TRANSITION RAILING (TYPE WB)	ALTERNATIVE FLARED TERMINAL SYSTEM	ALTERNATIVE IN-LINE TERMINAL SYSTEM	END ANCHOR ASSEMBLY (TYPE SFT)	RECONSTRUCT MBGR	VEGETATION CONTROL (MINOR Conc.)
	R†/L†	LF	LF	EA	EA	EA	EA	LF	SQYD
NCL1 75+40.00	R†					1	1		23.40
NCL1 75+90.00 TO NCL1 81+01.00	R†	511.00	500.00						189.07
HCL1 76+72.00	R†					1			
HCL1 77+22.00 TO HCL1 78+90.00	R†	168.00		1					70.46
HCL1 75+00.00 TO HCL1 78+04.00	R†							304.00	112.48
HCL1 78+35.00 TO HCL1 79+40.00	L†		105.00						
HCL1 80+99.00	R†			1					8.30
HCL1 81+24.00 TO HCL1 83+06.00	R†	182.00					1		67.34
HCL1 81+00.00 TO HCL1 83+06.00	R†		206.00						
HCL2 82+68.00	R†					1			23.40
HCL2 83+80.00 TO HCL2 91+51.00	R†		771.00						
HCL2 83+18.00 TO HCL2 91+51.00	R†	833.00							308.21
YCL2 93+40.00 TO YCL2 94+80.00	R†	140.00					2		51.8
A1 757+38.00	R†		126.00						
A1 757+82.00	R†				1				21.7
A1 758+20.00	R†			1					8.30
Z1 28+01.00 TO Z1 28+64.00	L†	63.00					1		23.31
Z1 28+65.00 TO Z1 29+65.00	R†							100.00	37.00
TOTAL		1897.00	1708.00	3	1	3	5	404.00	944.77

MINOR CONCRETE (STAMPED CONCRETE)

LOCATION	TYPE	MINOR CONCRETE (STAMPED CONCRETE)	CLASS 2 AB *
		CY	CY
NCL1 75+80.00	GORE	15.82	42.70
HCL1 72+00.00	ISLAND	7.85	21.19
HCL1 78+00.00	GORE	4.57	12.34
HCL2 80+50.00	ISLAND	2.37	6.40
HCL2 88+00.00	GORE	22.00	59.40
TCL1 65+75.00	GORE	4.28	11.57
TCL1 62+00.00	ISLAND	38.70	28.94
TCL2 66+00.00	ISLAND	15.00	61.15
TCL2 75+00.00	GORE	16.87	45.54
YCL1 86+00.00	ISLAND	77.17	208.36
YCL1 91+00.00	GORE	4.57	12.34
YCL2 96+00.00	GORE	18.25	49.27
R4 750+00.00	ISLAND	5.57	0.00
R4 755+00.00	GORE	19.63	53.00
TOTAL		252.65	612.20

* FOR TOTAL ITEMS SEE ROADWAY ITEMS

FENCE

STATION LIMITS	DIRECTION	CHAIN LINK FENCE (TYPE CL-4)	REMOVE CHAIN LINK FENCE
	R†/L†	LF	LF
HCL1 79+40.00 TO HCL1 79+51.64	R†	54.00	
HCL1 79+45.00 TO HCL1 79+51.64	R†		42.00
HCL1 81+08.82 TO HCL2 80+78.00	R†	93.00	87.00
TOTAL		147.00	129.00

TEMPORARY EROSION CONTROL

TEMPORARY FIBER ROLL	TEMPORARY SILT FENCE	TEMPORARY CONSTRUCTION ENTRANCE	TEMPORARY CHECK DAM	TEMPORARY DRAINAGE INLET PROTECTION	TEMPORARY HYDRAULIC MULCH (BONDED FIBER MATRIX)	TEMPORARY GRAVEL BAG BERM	TEMPORARY COVER
LF	LF	EA	LF	EA	SQYD	LF	SQYD
24521	2104	2	304	6	10261	691	5130

EXTEND IRRIGATION CROSSOVERS

LOCATION		SIDE		EXTEND CONDUIT		CB	OL	(N) WATER LINE CROSSOVER	(N) SPRINKLER CONTROL CROSSOVER
LINE	STATION	R†	L†	SIZE (INCH) 8				SIZE (INCH)	SIZE (INCH)
				LENGTH (LF)					
HCL1	73+60	X	X	21			X	4	*
HCL1	76+07	X	X	25			X	3	*
HCL2	83+08	X		10			X	2	
R4	750+29	X		20			X	2	*
R4	750+40	X		20			X	3	*
TOTAL				96					

(N) - NOT A SEPARATE PAY ITEM FOR INFORMATION ONLY
X - DENOTES REQUIREMENT
CB - COUPLING BAND
OL - OVERLAP
* - MATCH EXISTING CONTROL CROSSOVER, 2" MINIMUM

SUMMARY OF QUANTITIES

Q-2

STATE OF CALIFORNIA - DEPARTMENT OF TRANSPORTATION
Caltrans
NORTH REGION
OFFICE OF DESIGN, SOUTH
DESIGN BRANCH S13

FUNCTIONAL SUPERVISOR: OSCAR VASQUEZ
CALCULATED-DESIGNED BY: L. HERNANDEZ
CHECKED BY: D. SIMMONS
REVISED BY
DATE REVISED

LAST REVISION 00-00-00
DATE PLOTTED => 05-JAN-2010
TIME PLOTTED => 14:04

Dist	COUNTY	ROUTE	POST MILES TOTAL PROJECT	SHEET No.	TOTAL SHEETS
03	Sac	50	R0.6/17.4	106	233

REGISTERED CIVIL ENGINEER 8/11/09 DATE

1-4-10
PLANS APPROVAL DATE

REGISTERED PROFESSIONAL ENGINEER D. SIMMONS No. 70703 Exp. 6-30-11 CIVIL STATE OF CALIFORNIA

THE STATE OF CALIFORNIA OR ITS OFFICERS OR AGENTS SHALL NOT BE RESPONSIBLE FOR THE ACCURACY OR COMPLETENESS OF SCANNED COPIES OF THIS PLAN SHEET.

CONCRETE CURB, GUTTER, AND SIDEWALK

STATION LIMITS	LOCATION	MINOR CONCRETE (MISC CONSTRUCTION) CURB (TYPE A1-6)	CURB (TYPE D-4)	CURB (MODIFIED TYPE A2-8)	CURB (TYPE A2-8)	CURB RAMP (MODIFIED CASE F)	CURB RAMP (MODIFIED CASE C)	CONC SW	REMOVE CONC SW	REMOVE CONC (CURB AND GUTTER)
	R†/L†	CY	CY	CY	CY	CY	CY	CY	CY	LF
NCL1 75+80.00 TO NCL1 78+07.00	LT	5.87								
NCL1 75+81.70 TO NCL1 78+07.00	LT		9.20							
TCL1 59+33.00 TO TCL1 61+23.52	RT				12.38		1.16	11.86	11.86	194.00
TCL1 61+08.00 TO TCL1 63+00.00	RT/LT			12.25						
TCL1 61+08.70 TO TCL1 61+38.80	LT				2.23					
TCL1 61+31.41 TO TCL1 61+38.80	LT								7.39	7.39
TCL1 61+28.70 TO TCL1 63+00.00	LT									175.50
TCL1 61+28.70 TO TCL1 61+31.80	LT					0.49		0.73		12.00
TCL2 65+59.00 TO TCL2 66+42.00	RT/LT				5.42					
TCL2 65+59.00 TO TCL2 66+96.00	RT			8.87						
TCL2 66+42.00 TO TCL2 66+96.00	LT									61.34
TCL2 65+82.90 TO TCL2 66+93.30	LT						2.92	4.91		
TCL2 65+75.00 TO TCL2 65+86.50	RT						1.16		11.50	11.50
TCL2 66+12.58 TO TCL2 66+96.58	RT								84.00	84.00
YCL1 85+22.04 TO YCL1 88+07.12	LT			18.43						
YCL1 85+22.04 TO YCL1 85+50.53	LT				2.07					
YCL1 85+50.53 TO YCL1 88+07.12	LT									304.60
R4 749+65.00 TO R4 751+37.00	RT/LT			10.97					10.51	172.00
SUBTOTAL		5.87	9.20	50.52	22.10	0.49	5.24	17.50	125.26	1,022.33
TOTAL		110.92							125.26	1,022.33

HMA OVERSIDE DRAIN

STATION LIMITS	DIRECTION	PLACE HMA (Misc AREA)	HMA (TYPE A) *
	R†/L†	SQYD	TON
NCL1 73+50.50	RT	2.21	0.49
HCL1 72+60.00	RT	2.21	0.49
HCL1 73+80.00	RT	2.21	0.49
HCL2 81+43.00	RT	2.21	0.49
TCL1 64+25.00	RT	2.21	0.49
YCL1 86+85.00	RT	2.21	0.49
YCL2 96+00.00	RT	2.21	0.49
R4 750+80.00	RT	2.21	0.49
R4 768+80.00	RT	2.21	0.49
TOTAL		19.89	4.41

* FOR TOTAL ITEMS SEE ROADWAY ITEMS

TEMPORARY FENCE

STATION LIMITS	DIRECTION	TEMP FENCE (TYPE ESA)
	R†/L†	LF
HCL1 72+50.00	R†	275
TCL1 61+50.00	R†	330
TCL2 70+00.00	R†	30
YCL1 89+50.00	L†	200
R4 752+50.00	R†	350
Z1 25+50.00	L†	180
TOTAL		1,365

HMA DIKE

STATION LIMITS	TYPE	DIRECTION	HMA DIKE (TYPE F)	HMA DIKE (TYPE C)	HMA DIKE (TYPE E)	HMA DIKE (TYPE A)	HMA * (TYPE A)	REMOVE AC DIKE
		R†/L†	LF	LF	LF	LF	TON	LF
NCL1 73+50.50 TO NCL1 75+15.00	E	RT			171.50		4.90	
NCL1 72+60.00 TO NCL1 75+80.00	A	LT				320.00	9.50	
NCL1 74+25.00 TO NCL1 76+51.00	REMOVE	RT						226.00
NCL1 75+80.00 TO NCL1 78+06.00	REMOVE	LT						226.00
NCL1 72+60.00 TO NCL1 78+07.00	REMOVE	LT						547.00
NCL1 75+15.00 TO NCL1 75+90.00	C	RT		75.00			0.63	
NCL1 75+90.00 TO NCL1 81+01.00	F	RT	511.00				7.42	
HCL1 71+92.00 TO HCL1 76+47.00	E	RT			455.00		13.01	
HCL1 76+47.00 TO HCL1 77+22.00	C	RT		75.00			0.63	
HCL1 77+22.00 TO HCL1 79+15.00	F	RT	193.00				2.80	
HCL1 75+00.00 TO HCL1 78+04.00	F	LT	304.00				4.41	
HCL1 80+99.00 TO HCL1 83+06.00	F	RT	207.00				3.01	
HCL2 80+42.50 TO HCL2 82+68.00	E	RT			225.50		6.45	
HCL2 82+68.00 TO HCL2 91+51.00	F	RT	883.00				12.82	
TCL1 61+27.00 TO TCL1 64+25.00	E	RT	214.00				6.12	
TCL2 66+12.00 TO TCL2 66+96.00	E	RT			84.00		2.40	
YCL1 83+55.00 TO YCL1 87+12.00	E	RT			357.00		10.21	
YCL2 93+40.00 TO YCL2 94+80.00	F	RT	140.00				2.03	
YCL2 94+80.00 TO YCL2 96+25.00	E	RT			144.00		4.12	
Z1 23+85.00 TO Z1 25+40.00	E	LT			155.00		4.60	
R4 749+72.00 TO R4 757+57.00	E	RT			785.00		22.45	
R4 757+57.00 TO R4 758+20.00	C	RT		63.00			0.53	
R4 758+20.00 TO R4 758+45.00	F	RT	25.00				0.36	
R4 762+60.00 TO R4 774+00.00	E	RT			1,140.00		32.60	
TOTAL			2,477.00	213.00	3,516.50	320.00	151.02	999.00

* FOR TOTAL ITEMS SEE ROADWAY ITEMS.

SUMMARY OF QUANTITIES

Q-3

STATE OF CALIFORNIA - DEPARTMENT OF TRANSPORTATION
NORTH REGION
OFFICE OF DESIGN, SOUTH
DESIGN BRANCH S13

FUNCTIONAL SUPERVISOR: OSCAR VASQUEZ
CALCULATED-DESIGNED BY: L. HERNANDEZ
CHECKED BY: D. SIMMONS
REVISED BY / DATE REVISED

LAST REVISION 00-00-00 | DATE PLOTTED => 05-JAN-2010 | TIME PLOTTED => 14:04

Dist	COUNTY	ROUTE	POST MILES TOTAL PROJECT	SHEET No.	TOTAL SHEETS
03	Sac	50	R0.6/17.4	107	233

Barbara Procissi
LICENSED LANDSCAPE ARCHITECT

1-4-10
PLANS APPROVAL DATE

LICENSED LANDSCAPE ARCHITECT
BARBARA PROCISSI No. 2435
Barbara Procissi
Signature
09-01-10
Renewal Date
Date
STATE OF CALIFORNIA

THE STATE OF CALIFORNIA OR ITS OFFICERS OR AGENTS SHALL NOT BE RESPONSIBLE FOR THE ACCURACY OR COMPLETENESS OF SCANNED COPIES OF THIS PLAN SHEET.

PLANT LIST AND PLANTING SPECIFICATIONS

PLANT GROUP	PLANT No.	SYMBOL	BOTANICAL NAME	COMMON NAME	SIZE	QUANTITY EACH	HOLE SIZE (INCH) Dia	HOLE SIZE (INCH) DEPTH	BASIN TYPE	IRON SULFATE ①	SOIL AMEND ①	COMMERCIAL FERTILIZER ① PLANTING	COMMERCIAL FERTILIZER ① PLT ESTB	BASIN MULCH	STAKING	PLANTING LIMITS MINIMUM DISTANCE (Ft) FROM TRVD WAY	PVMT	FENCE	WALL	PAVED DITCH	EARTH DITCH	ON CENTER (Ft)	REMARKS
A	1		ARCTOSTAPHYLOS 'EMERALD CARPET'	MANZANITA	NO. 1	25	②	②	I	--	⑦	1 PKT	--	1 CU FT	--	--	8	--	--	8	10	8	GROUNDCOVER
	2		HEMEROCALLIS HYBRID 'SPELLBINDER'	DAY LILY	NO. 1	80	②	②	I	--	⑦	1 PKT	--	1 CU FT	--	--	3	--	--	3	5	3	SHRUB
	3		RHAPHIOLEPIS INDICA 'ENCHANTRESS'	INDIAN HAWTHORN	NO. 1	26	②	②	I	--	1 CU FT	1 PKT	--	1 CU FT	--	--	10	--	--	6	6	5	SHRUB
	4		ROSMARINUS OFFICINALIS 'HUNTINGTON CARPET'	ROSEMARY	NO. 1	600	②	②	I	--	⑦	1 PKT	--	1 CU FT	--	--	10	--	--	8	8	6	GROUNDCOVER
B	5		CERCIS OCCIDENTALIS	WESTERN REDBUD	NO. 5	15	24"	18"	I	--	1 CU FT	3 PKT	--	2 CU FT	⑥	--	15	15	15	15	15	20	SHRUB
	6		PLATANUS ACERFOLIA 'COLUMBIA'	LONDON PLANE TREE	NO. 5	32	24"	18"	I	--	1 CU FT	3 PKT	--	2 CU FT	⑥	30	--	20	20	10	12	20	TREE
	7		QUERCUS WISLIZENII	INTERIOR LIVE OAK	NO. 5	60	24"	18"	I	--	1 CU FT	3 PKT	--	2 CU FT	⑥	30	--	15	15	10	10	20	TREE

APPLICABLE WHEN CIRCLED:

① - Quantities shown are "per plant" unless shown as SQFT or SQYD application rates.
② - Sufficient to receive root ball.
3 - Does not apply to mulch areas.
4 - As shown on plans.
5 - Unless otherwise shown on plans.
⑥ - See detail.
⑦ - See Special Provisions.

MULCH AREA

VEGETATION REMOVAL (CLEARING AND GRUBBING)

NOTE:
Underlined portions of botanical name indicate abbreviations used on Planting Plans.

PLANT LIST
PL-1

REVISED BY | DATE REVISED
GUY W. HOWE | BARBARA PROCISSI
CALCULATED-DESIGNED BY | CHECKED BY
SENIOR LANDSCAPE ARCHITECT | KENNETH MURRY
STATE OF CALIFORNIA - DEPARTMENT OF TRANSPORTATION
Caltrans LANDSCAPE ARCHITECTURE

LAST REVISION 00-00-00 | DATE PLOTTED => 05-JAN-2010 | TIME PLOTTED => 14:04

Dist	COUNTY	ROUTE	POST MILES TOTAL PROJECT	SHEET No.	TOTAL SHEETS
03	Sac	50	R0.6/17.4	108	233

Barbara Procissi
LICENSED LANDSCAPE ARCHITECT

1-4-10
PLANS APPROVAL DATE

LICENSED LANDSCAPE ARCHITECT
BARBARA PROCISSI
No. 2435
Barbara Procissi
Signature
09-01-10
Renewal Date
Date
STATE OF CALIFORNIA

THE STATE OF CALIFORNIA OR ITS OFFICERS OR AGENTS SHALL NOT BE RESPONSIBLE FOR THE ACCURACY OR COMPLETENESS OF SCANNED COPIES OF THIS PLAN SHEET.

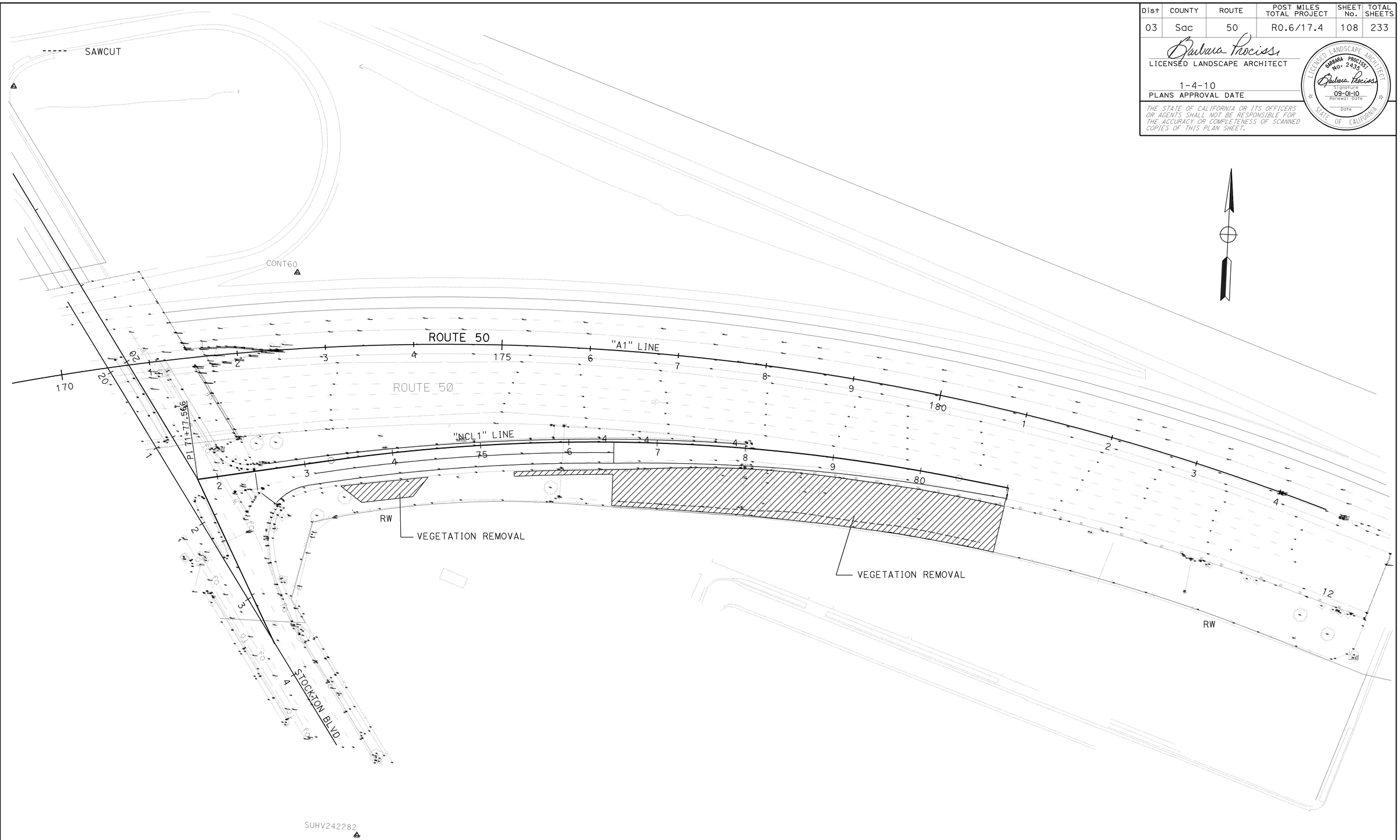

STOCKTON BLVD ON-RAMP PLANT REMOVAL PLAN

SCALE: 1" = 50′ **PR-1**

THIS PLAN ACCURATE FOR PLANT REMOVAL WORK ONLY.

STATE OF CALIFORNIA - DEPARTMENT OF TRANSPORTATION
Caltrans® LANDSCAPE ARCHITECTURE

SENIOR LANDSCAPE ARCHITECT: KENNETH MURRY

CALCULATED-DESIGNED BY: GUY W. HOWE
CHECKED BY: BARBARA PROCISSI

REVISED BY
DATE REVISED

LAST REVISION 00-00-00
DATE PLOTTED => 05-JAN-2010
TIME PLOTTED => 14:04

Dist	COUNTY	ROUTE	POST MILES TOTAL PROJECT	SHEET No.	TOTAL SHEETS
03	Sac	50	R0.6/17.4	109	233

Barbara Procissi
LICENSED LANDSCAPE ARCHITECT

1-4-10
PLANS APPROVAL DATE

LICENSED LANDSCAPE ARCHITECT
BARBARA PROCISSI No. 2435
Barbara Procissi
Signature
09-01-10
Renewal Date
Date
STATE OF CALIFORNIA

THE STATE OF CALIFORNIA OR ITS OFFICERS OR AGENTS SHALL NOT BE RESPONSIBLE FOR THE ACCURACY OR COMPLETENESS OF SCANNED COPIES OF THIS PLAN SHEET.

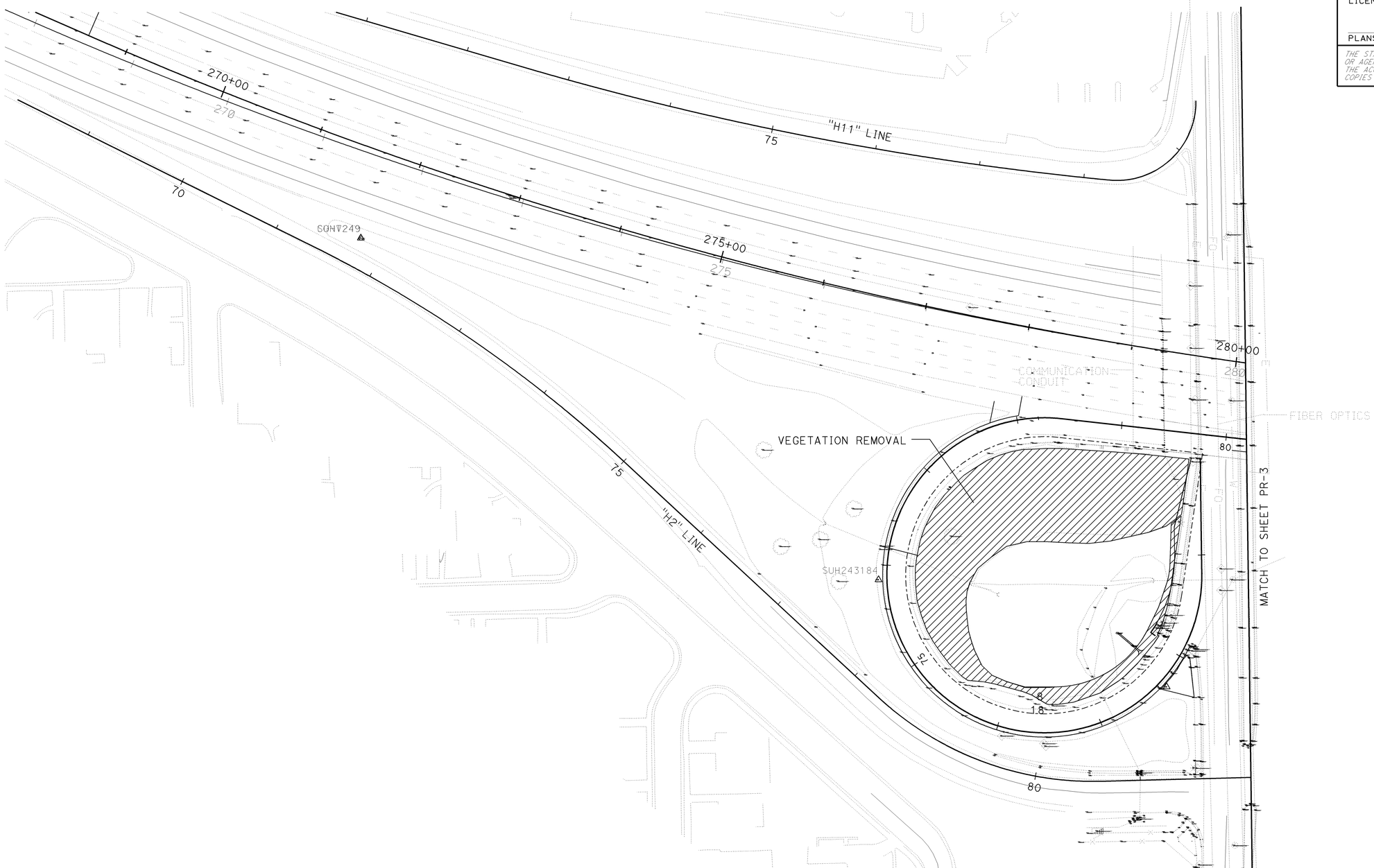

THIS PLAN ACCURATE FOR PLANT REMOVAL WORK ONLY.

65th STREET ON-RAMP PLANT REMOVAL PLAN

SCALE: 1" = 50'

PR-2

STATE OF CALIFORNIA - DEPARTMENT OF TRANSPORTATION
Caltrans® LANDSCAPE ARCHITECTURE

SENIOR LANDSCAPE ARCHITECT: KENNETH MURRY

CALCULATED-DESIGNED BY: GUY W. HOWE
CHECKED BY: BARBARA PROCISSI

REVISED BY
DATE REVISED

LAST REVISION: DATE PLOTTED => 05-JAN-2010
00-00-00 TIME PLOTTED => 14:05

Dist	COUNTY	ROUTE	POST MILES TOTAL PROJECT	SHEET No.	TOTAL SHEETS
03	Sac	50	R0.6/17.4	110	233

Barbara Procissi
LICENSED LANDSCAPE ARCHITECT

1-4-10
PLANS APPROVAL DATE

LICENSED LANDSCAPE ARCHITECT
BARBARA PROCISSI No. 2435
Barbara Procissi
Signature
09-01-10
Renewal Date
Date
STATE OF CALIFORNIA

THE STATE OF CALIFORNIA OR ITS OFFICERS OR AGENTS SHALL NOT BE RESPONSIBLE FOR THE ACCURACY OR COMPLETENESS OF SCANNED COPIES OF THIS PLAN SHEET.

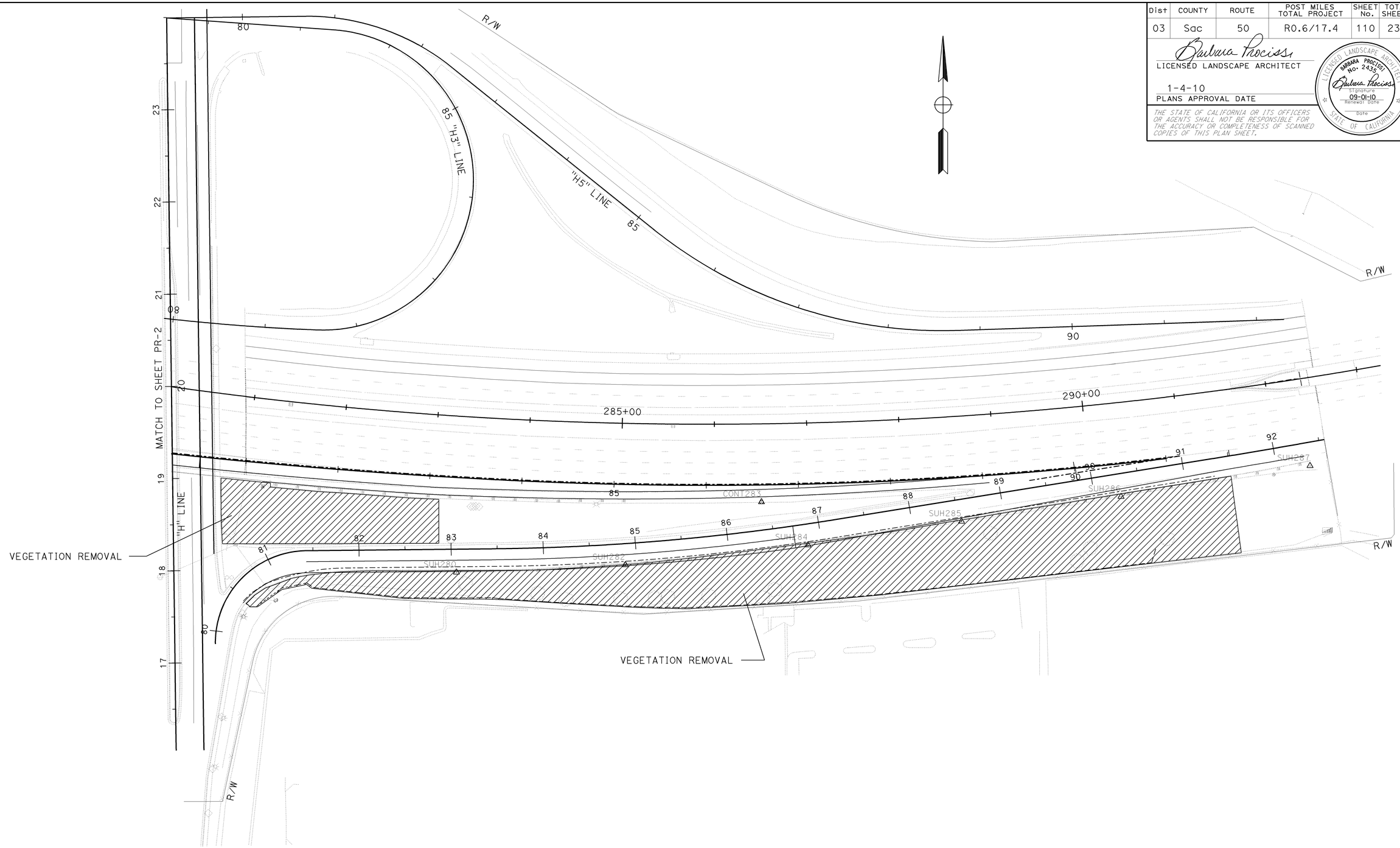

THIS PLAN ACCURATE FOR PLANT REMOVAL WORK ONLY.

65th STREET ON-RAMP PLANT REMOVAL PLAN

SCALE: 1" = 50'

PR-3

STATE OF CALIFORNIA - DEPARTMENT OF TRANSPORTATION
Caltrans® LANDSCAPE ARCHITECTURE

SENIOR LANDSCAPE ARCHITECT: KENNETH MURRY
CALCULATED-DESIGNED BY: GUY W. HOWE
CHECKED BY: BARBARA PROCISSI
REVISED BY
DATE REVISED

LAST REVISION 00-00-00
DATE PLOTTED => 05-JAN-2010
TIME PLOTTED => 14:05

Dist	COUNTY	ROUTE	POST MILES TOTAL PROJECT	SHEET No.	TOTAL SHEETS
03	Sac	50	R0.6/17.4	111	233

Barbara Procissi
LICENSED LANDSCAPE ARCHITECT

1-4-10
PLANS APPROVAL DATE

LICENSED LANDSCAPE ARCHITECT
BARBARA PROCISSI No. 2435
Barbara Procissi
Signature
09-01-10
Renewal Date
Date
STATE OF CALIFORNIA

THE STATE OF CALIFORNIA OR ITS OFFICERS OR AGENTS SHALL NOT BE RESPONSIBLE FOR THE ACCURACY OR COMPLETENESS OF SCANNED COPIES OF THIS PLAN SHEET.

THIS PLAN ACCURATE FOR PLANT REMOVAL ONLY.

FOLSOM Blvd ON-RAMP
PLANTING REMOVAL PLAN

SCALE: 1" = 50'

PR-4

STATE OF CALIFORNIA - DEPARTMENT OF TRANSPORTATION
Caltrans® LANDSCAPE ARCHITECTURE

SENIOR LANDSCAPE ARCHITECT: KENNETH MURRY
CALCULATED-DESIGNED BY: GUY W. HOWE
CHECKED BY: BARBARA PROCISSI
REVISED BY
DATE REVISED

LAST REVISION 00-00-00 | DATE PLOTTED => 05-JAN-2010 | TIME PLOTTED => 14:05

Dist	COUNTY	ROUTE	POST MILES TOTAL PROJECT	SHEET No.	TOTAL SHEETS
03	Sac	50	R0.6/17.4	112	233

Barbara Procissi
LICENSED LANDSCAPE ARCHITECT

1-4-10
PLANS APPROVAL DATE

LICENSED LANDSCAPE ARCHITECT
BARBARA PROCISSI
No. 2435
Barbara Procissi
Signature
09-01-10
Renewal Date
Date
STATE OF CALIFORNIA

THE STATE OF CALIFORNIA OR ITS OFFICERS OR AGENTS SHALL NOT BE RESPONSIBLE FOR THE ACCURACY OR COMPLETENESS OF SCANNED COPIES OF THIS PLAN SHEET.

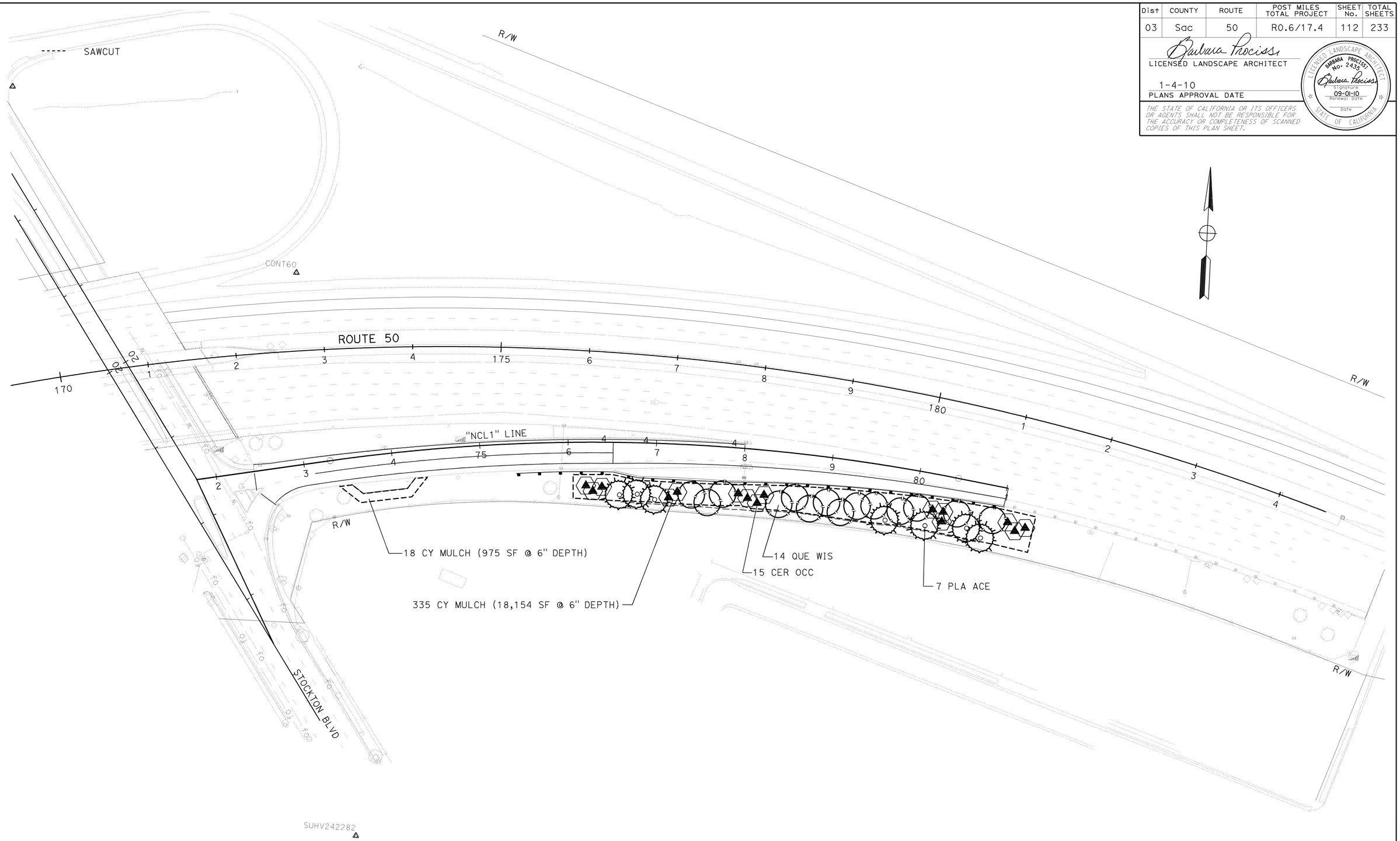

STOCKTON Blvd ON-RAMP PLANTING PLAN

SCALE: 1" = 50'

PP-1

THIS PLAN ACCURATE FOR PLANTING WORK ONLY.

STATE OF CALIFORNIA - DEPARTMENT OF TRANSPORTATION
Caltrans® LANDSCAPE ARCHITECTURE

SENIOR LANDSCAPE ARCHITECT: KENNETH MURRY

CALCULATED-DESIGNED BY: GUY W. HOWE
CHECKED BY: BARBARA PROCISSI

REVISED BY
DATE REVISED

LAST REVISION 00-00-00
DATE PLOTTED => 05-JAN-2010
TIME PLOTTED => 14:05

Dist	COUNTY	ROUTE	POST MILES TOTAL PROJECT	SHEET No.	TOTAL SHEETS
03	Sac	50	R0.6/17.4	113	233

Barbara Prociss
LICENSED LANDSCAPE ARCHITECT

1-4-10
PLANS APPROVAL DATE

LICENSED LANDSCAPE ARCHITECT
BARBARA PROCISSI
No. 2435
Barbara Prociss
Signature
09-01-10
Renewal Date
Date
STATE OF CALIFORNIA

THE STATE OF CALIFORNIA OR ITS OFFICERS OR AGENTS SHALL NOT BE RESPONSIBLE FOR THE ACCURACY OR COMPLETENESS OF SCANNED COPIES OF THIS PLAN SHEET.

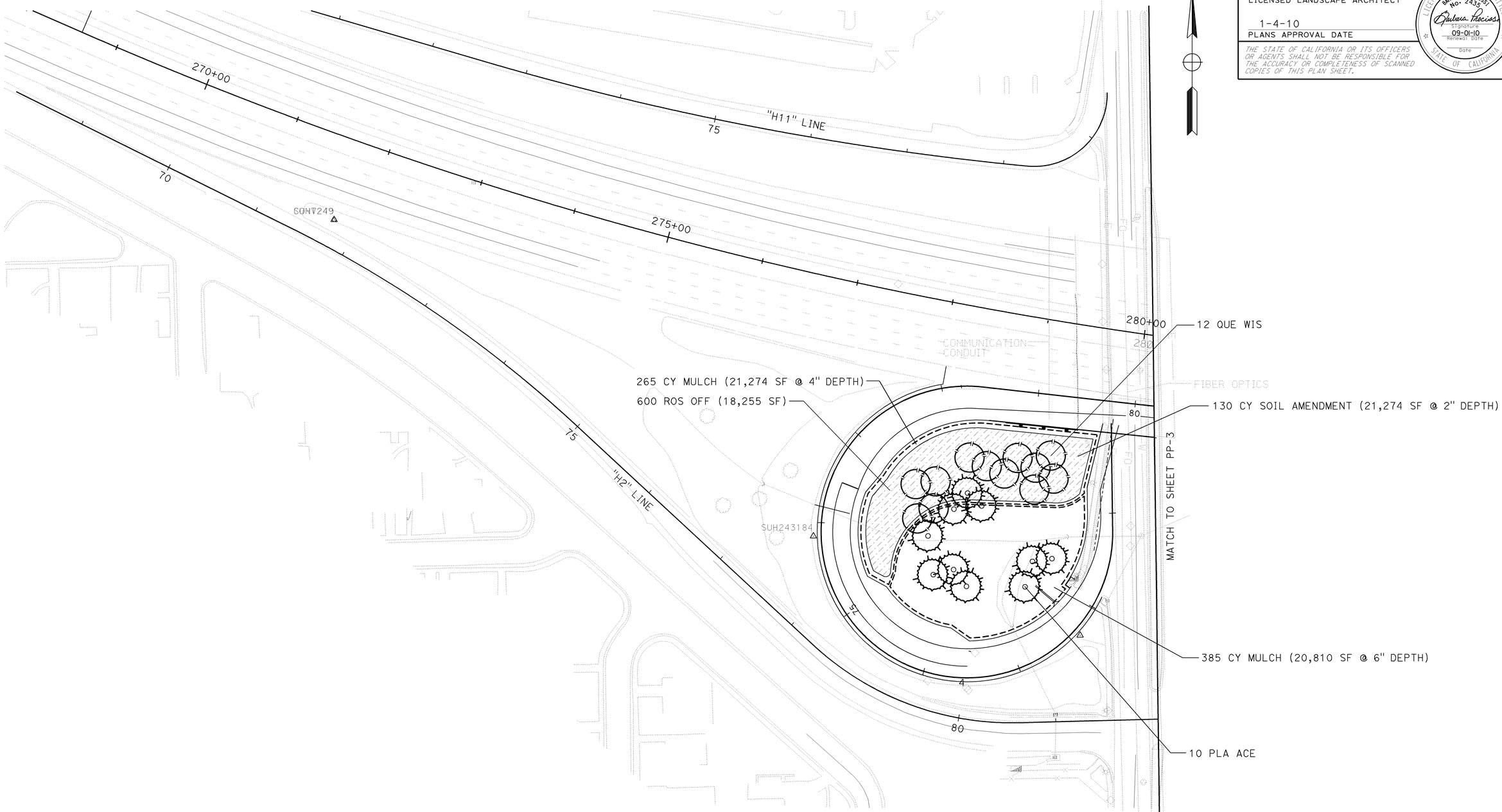

THIS PLAN ACCURATE FOR PLANTING WORK ONLY

65th STREET ON-RAMP PLANTING PLAN

SCALE: 1" = 50'

PP-2

STATE OF CALIFORNIA - DEPARTMENT OF TRANSPORTATION
Caltrans® LANDSCAPE ARCHITECTURE

SENIOR LANDSCAPE ARCHITECT: KENNETH MURRY
CALCULATED-DESIGNED BY: GUY W. HOWE
CHECKED BY: BARBARA PROCISSI
REVISED BY
DATE REVISED

LAST REVISION 00-00-00
DATE PLOTTED => 06-JAN-2010
TIME PLOTTED => 13:21

Dist	COUNTY	ROUTE	POST MILES TOTAL PROJECT	SHEET No.	TOTAL SHEETS
03	Sac	50	R0.6/17.4	114	233

Barbara Procissi
LICENSED LANDSCAPE ARCHITECT

1-4-10
PLANS APPROVAL DATE

LICENSED LANDSCAPE ARCHITECT
BARBARA PROCISSI No. 2435
Barbara Procissi
Signature
09-01-10
Renewal Date
Date
STATE OF CALIFORNIA

THE STATE OF CALIFORNIA OR ITS OFFICERS OR AGENTS SHALL NOT BE RESPONSIBLE FOR THE ACCURACY OR COMPLETENESS OF SCANNED COPIES OF THIS PLAN SHEET.

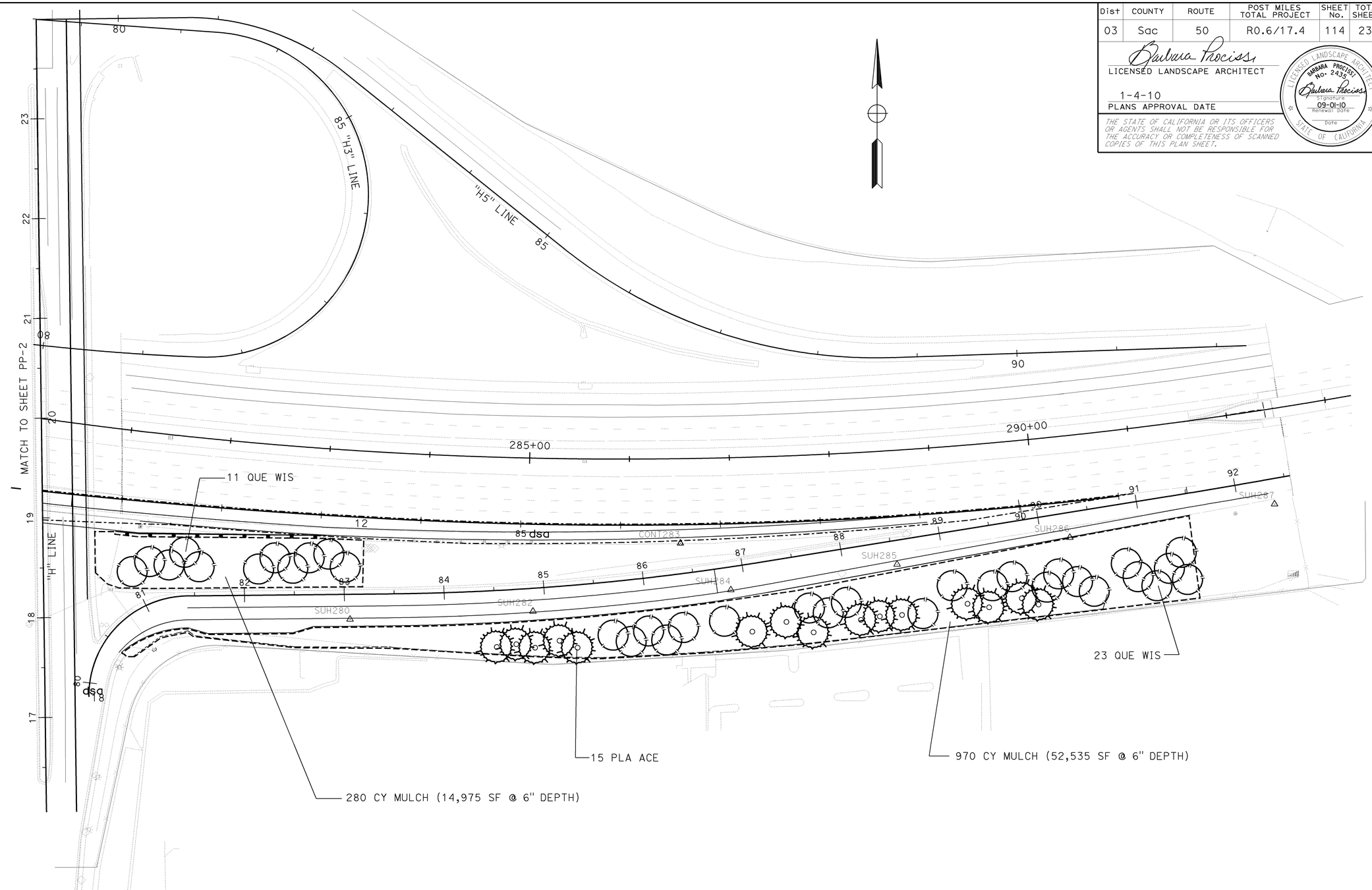

THIS PLAN ACCURATE FOR PLANTING WORK ONLY.

65th STREET ON-RAMP PLANTING PLAN

SCALE: 1" = 50'

PP-3

STATE OF CALIFORNIA - DEPARTMENT OF TRANSPORTATION
Caltrans LANDSCAPE ARCHITECTURE

SENIOR LANDSCAPE ARCHITECT: KENNETH MURRY

CALCULATED-DESIGNED BY: GUY W. HOWE
CHECKED BY: BARBARA PROCISSI

REVISED BY
DATE REVISED

LAST REVISION 00-00-00
DATE PLOTTED => 05-JAN-2010
TIME PLOTTED => 14:05

Dist	COUNTY	ROUTE	POST MILES TOTAL PROJECT	SHEET No.	TOTAL SHEETS
03	Sac	50	R0.6/17.4	115	233

Barbara Prociss
LICENSED LANDSCAPE ARCHITECT

1-4-10
PLANS APPROVAL DATE

LICENSED LANDSCAPE ARCHITECT
BARBARA PROCISS No. 2435
Barbara Prociss
Signature
09-01-10
Renewal Date
Date
STATE OF CALIFORNIA

THE STATE OF CALIFORNIA OR ITS OFFICERS OR AGENTS SHALL NOT BE RESPONSIBLE FOR THE ACCURACY OR COMPLETENESS OF SCANNED COPIES OF THIS PLAN SHEET.

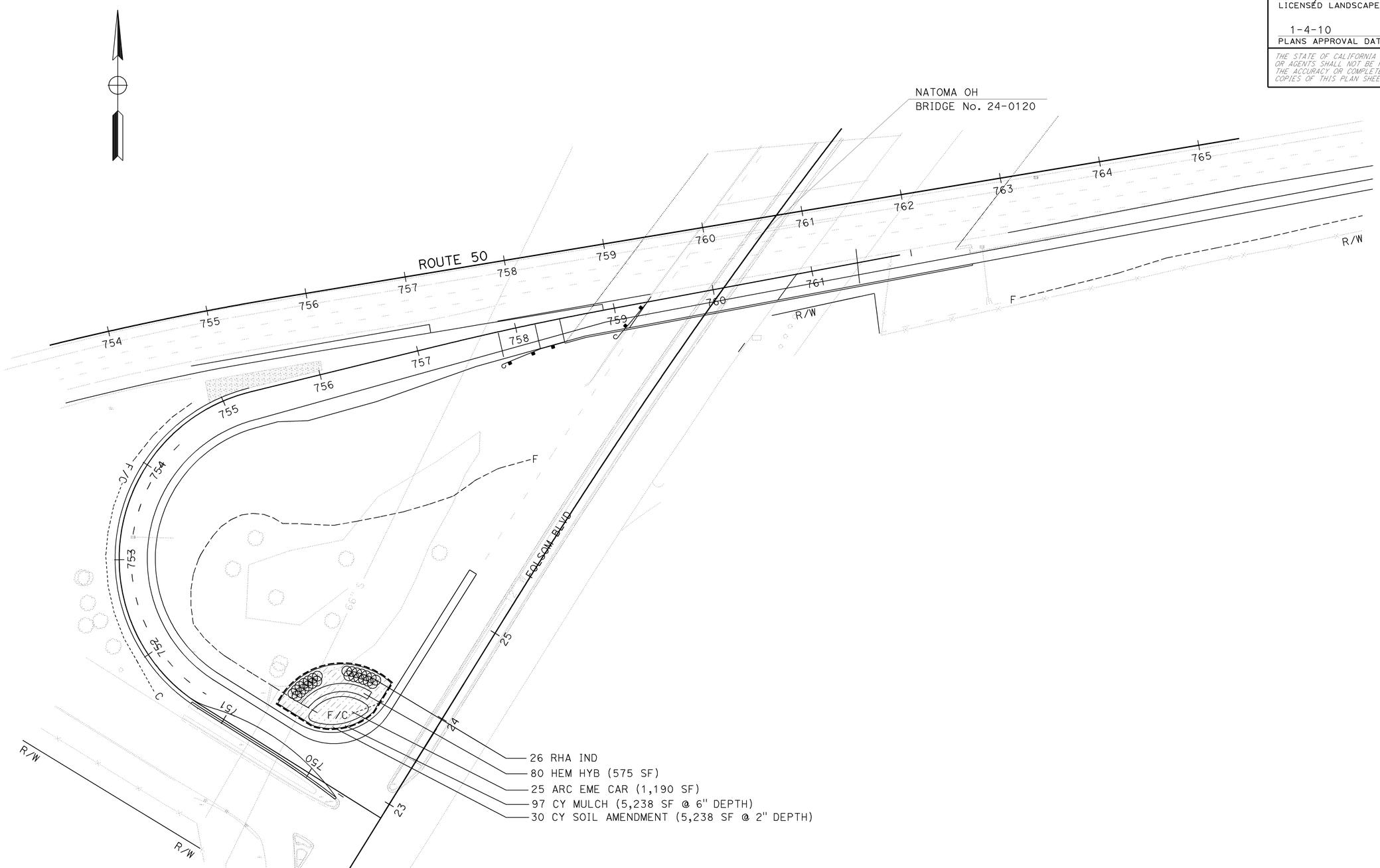

FOLSOM Blvd ON-RAMP
PLANTING PLAN

SCALE: 1" = 50'

PP-4

THIS PLAN ACCURATE FOR PLANTING WORK ONLY.

STATE OF CALIFORNIA - DEPARTMENT OF TRANSPORTATION
Caltrans® LANDSCAPE ARCHITECTURE

SENIOR LANDSCAPE ARCHITECT: KENNETH MURRY

CALCULATED-DESIGNED BY: GUY W. HOWE
CHECKED BY: BARBARA PROCISSI

REVISED BY
DATE REVISED

LAST REVISION 00-00-00
DATE PLOTTED => 05-JAN-2010
TIME PLOTTED => 14:05

Dist	COUNTY	ROUTE	POST MILES TOTAL PROJECT	SHEET No.	TOTAL SHEETS
03	Sac	50	R0.6/17.4	116	233

Barbara Procissi
LICENSED LANDSCAPE ARCHITECT

1-4-10
PLANS APPROVAL DATE

LICENSED LANDSCAPE ARCHITECT
BARBARA PROCISSI
No. 2435
Barbara Procissi
Signature
09-01-10
Renewal Date
Date
STATE OF CALIFORNIA

THE STATE OF CALIFORNIA OR ITS OFFICERS OR AGENTS SHALL NOT BE RESPONSIBLE FOR THE ACCURACY OR COMPLETENESS OF SCANNED COPIES OF THIS PLAN SHEET.

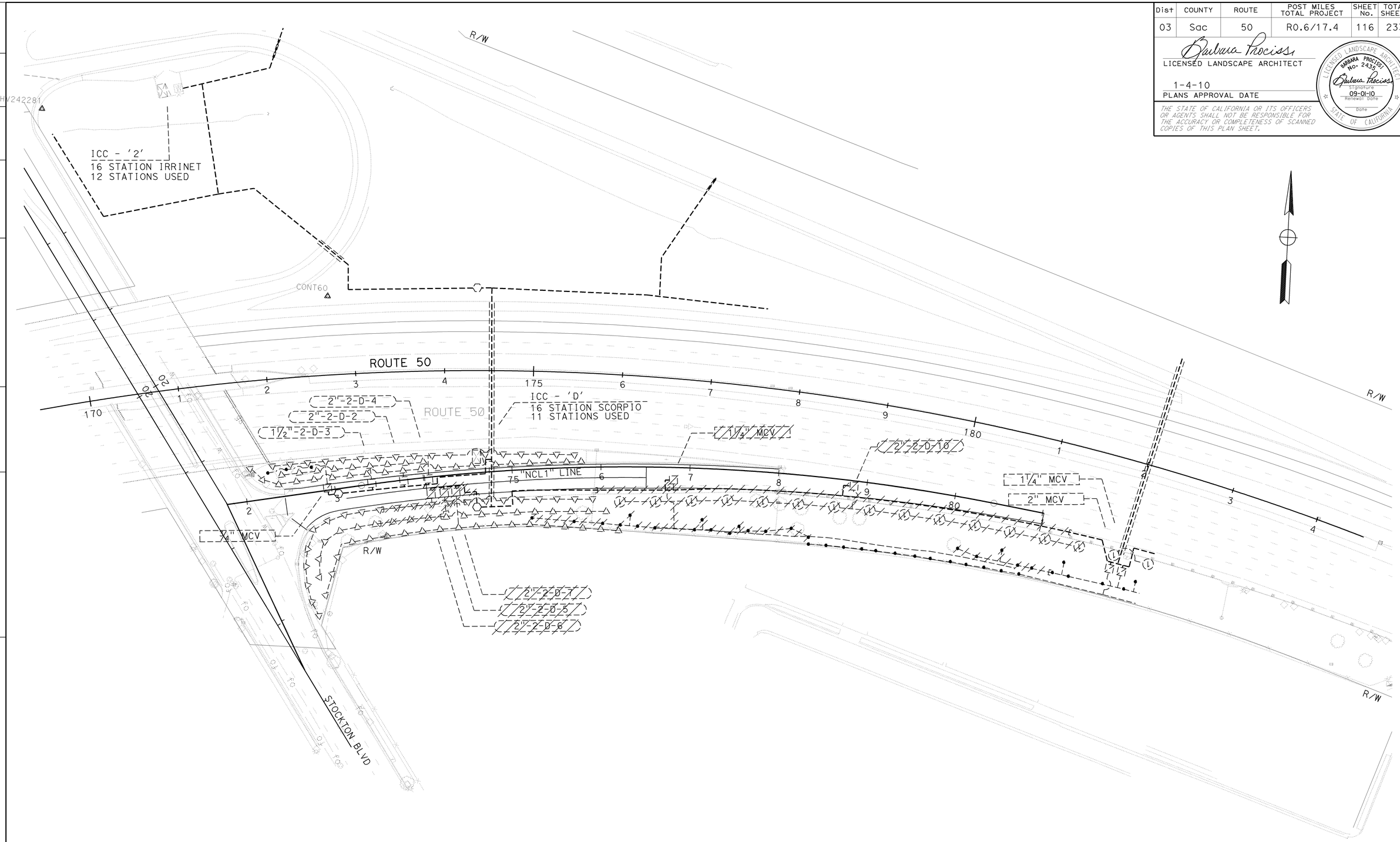

STOCKTON Blvd ON-RAMP IRRIGATION REMOVAL PLAN

SCALE: 1" = 50'

IR-1

THIS PLAN ACCURATE FOR IRRIGATION REMOVAL WORK ONLY.

STATE OF CALIFORNIA - DEPARTMENT OF TRANSPORTATION
Caltrans
LANDSCAPE ARCHITECTURE

SENIOR LANDSCAPE ARCHITECT: KENNETH MURRY

CALCULATED-DESIGNED BY: GUY W. HOWE
CHECKED BY: BARBARA PROCISSI

REVISED BY
DATE REVISED

LAST REVISION 00-00-00
DATE PLOTTED => 05-JAN-2010
TIME PLOTTED => 14:05

Dist	COUNTY	ROUTE	POST MILES TOTAL PROJECT	SHEET No.	TOTAL SHEETS
03	Sac	50	R0.6/17.4	117	233

Barbara Procissi
LICENSED LANDSCAPE ARCHITECT

1-4-10
PLANS APPROVAL DATE

LICENSED LANDSCAPE ARCHITECT
BARBARA PROCISSI No. 2435
Barbara Procissi
Signature
09-01-10
Renewal Date
Date
STATE OF CALIFORNIA

THE STATE OF CALIFORNIA OR ITS OFFICERS OR AGENTS SHALL NOT BE RESPONSIBLE FOR THE ACCURACY OR COMPLETENESS OF SCANNED COPIES OF THIS PLAN SHEET.

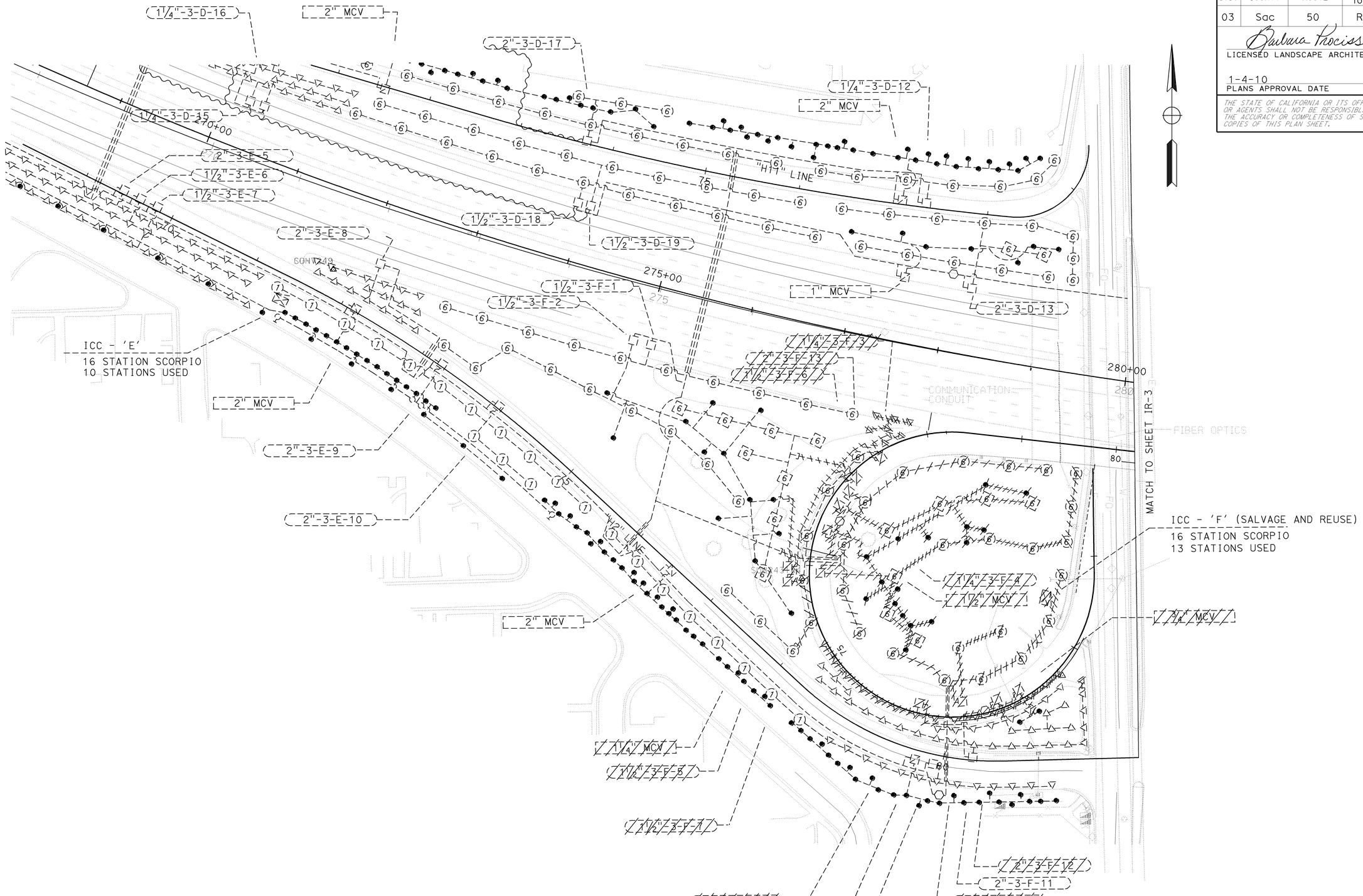

65th STREET ON-RAMP IRRIGATION REMOVAL PLAN

SCALE: 1" = 50' **IR-2**

THIS PLAN ACCURATE FOR IRRIGATION REMOVAL WORK ONLY.

STATE OF CALIFORNIA - DEPARTMENT OF TRANSPORTATION
Caltrans® LANDSCAPE ARCHITECTURE

SENIOR LANDSCAPE ARCHITECT: KENNETH MURRY

CALCULATED-DESIGNED BY: GUY W. HOWE
CHECKED BY: BARBARA PROCISSI

REVISED BY
DATE REVISED

LAST REVISION 00-00-00
DATE PLOTTED => 05-JAN-2010
TIME PLOTTED => 14:05

Dist	COUNTY	ROUTE	POST MILES TOTAL PROJECT	SHEET No.	TOTAL SHEETS
03	Sac	50	R0.6/17.4	118	233

Barbara Procissi
LICENSED LANDSCAPE ARCHITECT

1-4-10
PLANS APPROVAL DATE

LICENSED LANDSCAPE ARCHITECT
BARBARA PROCISSI No. 2435
Barbara Procissi
Signature
09-01-10
Renewal Date
Date
STATE OF CALIFORNIA

THE STATE OF CALIFORNIA OR ITS OFFICERS OR AGENTS SHALL NOT BE RESPONSIBLE FOR THE ACCURACY OR COMPLETENESS OF SCANNED COPIES OF THIS PLAN SHEET.

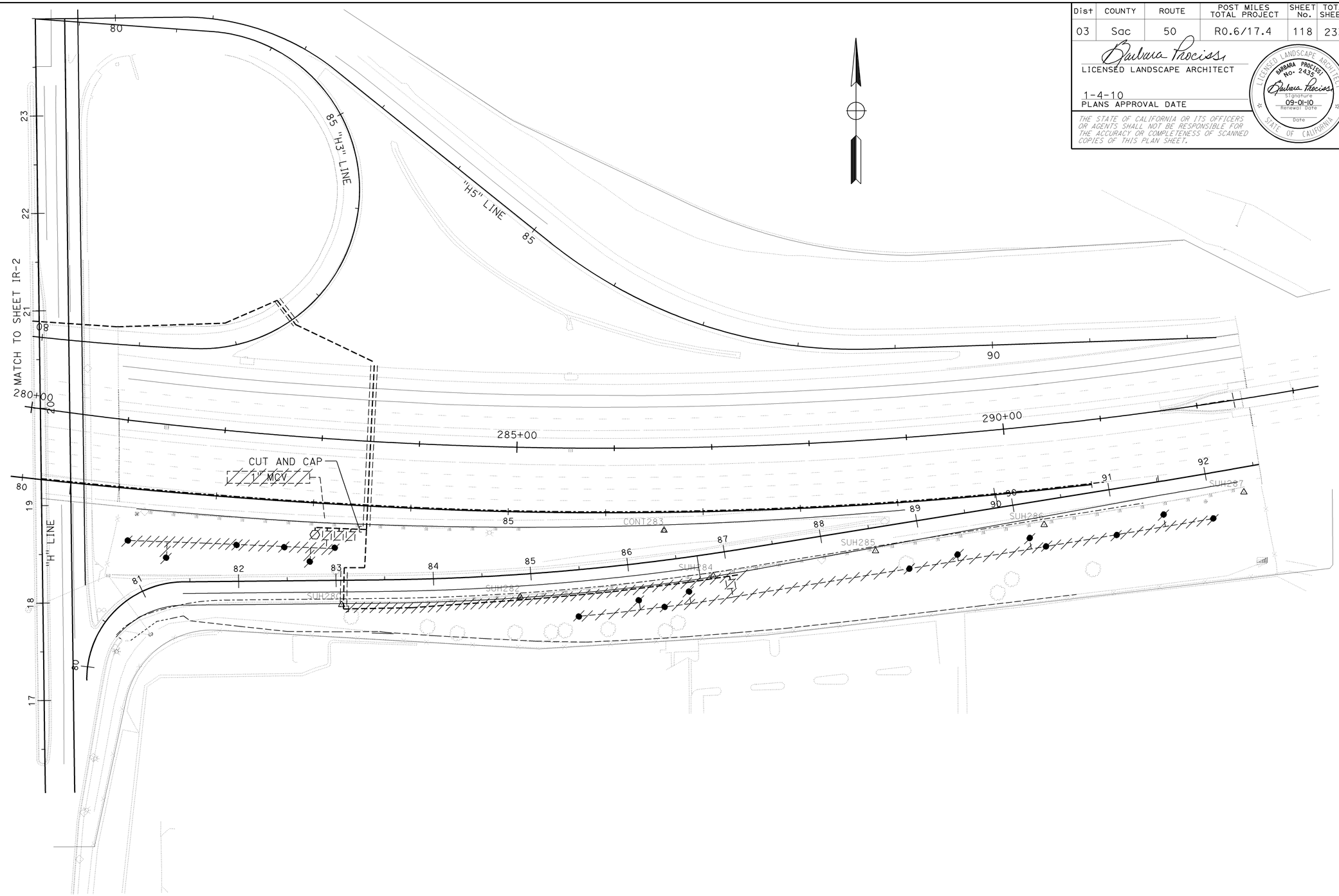

THIS PLAN ACCURATE FOR IRRIGATION REMOVAL WORK ONLY.

65th STREET ON-RAMP IRRIGATION REMOVAL PLAN

SCALE: 1" = 50' **IR-3**

STATE OF CALIFORNIA - DEPARTMENT OF TRANSPORTATION
Caltrans® LANDSCAPE ARCHITECTURE

SENIOR LANDSCAPE ARCHITECT: KENNETH MURRY
CALCULATED-DESIGNED BY: GUY W. HOWE
CHECKED BY: BARBARA PROCISSI
REVISED BY
DATE REVISED

LAST REVISION 00-00-00
DATE PLOTTED => 05-JAN-2010
TIME PLOTTED => 14:05

Dist	COUNTY	ROUTE	POST MILES TOTAL PROJECT	SHEET No.	TOTAL SHEETS
03	Sac	50	R0.6/17.4	119	233

Barbara Procissi
LICENSED LANDSCAPE ARCHITECT

1-4-10
PLANS APPROVAL DATE

LICENSED LANDSCAPE ARCHITECT
BARBARA PROCISSI No. 2435
Barbara Procissi
Signature
09-01-10
Renewal Date
Date
STATE OF CALIFORNIA

THE STATE OF CALIFORNIA OR ITS OFFICERS OR AGENTS SHALL NOT BE RESPONSIBLE FOR THE ACCURACY OR COMPLETENESS OF SCANNED COPIES OF THIS PLAN SHEET.

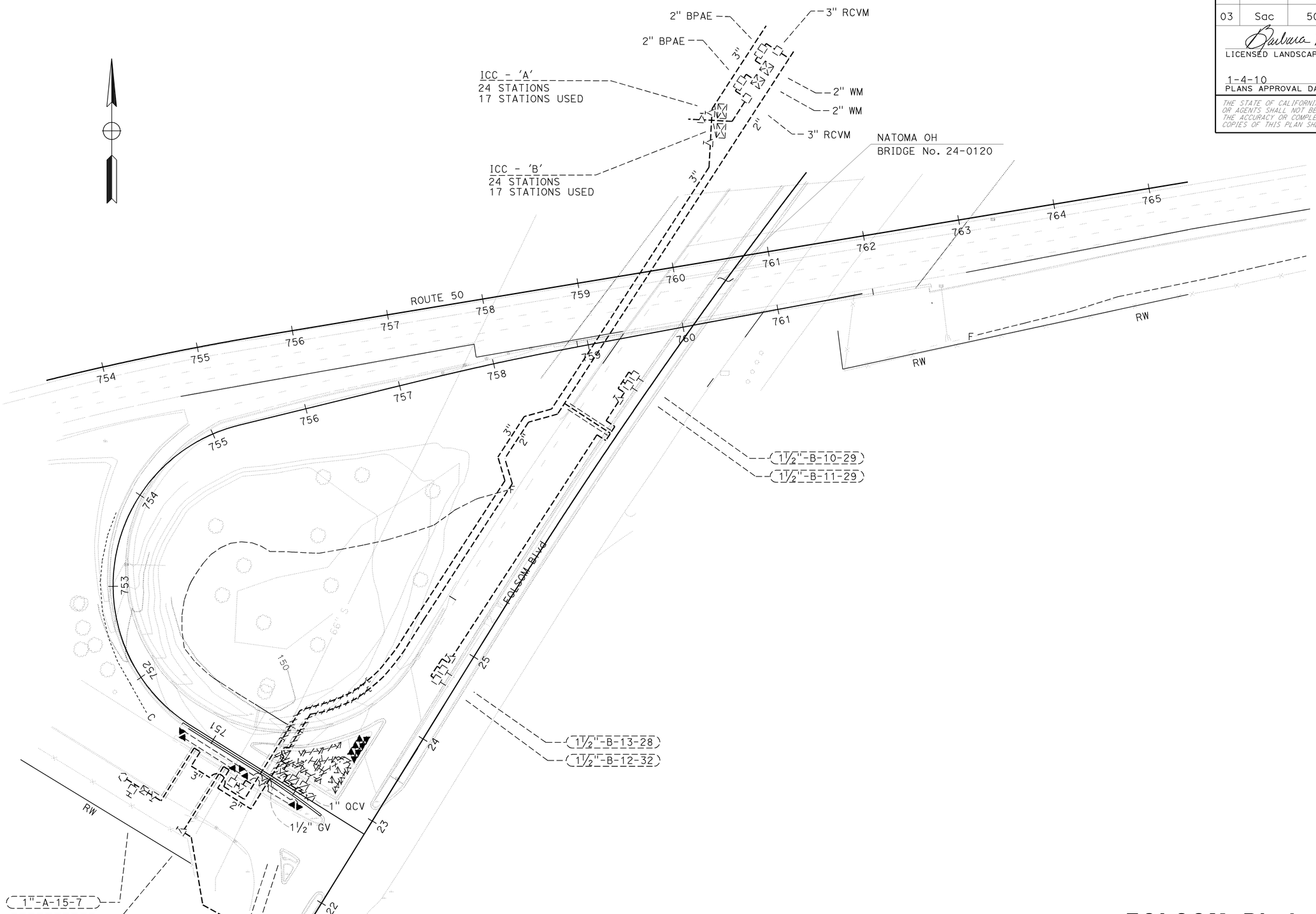

THIS PLAN ACCURATE FOR IRRIGATION REMOVAL ONLY

FOLSOM Blvd ON-RAMP IRRIGATION REMOVAL PLAN

SCALE: 1" = 50'

IR-4

STATE OF CALIFORNIA - DEPARTMENT OF TRANSPORTATION
Caltrans® LANDSCAPE ARCHITECTURE

SENIOR LANDSCAPE ARCHITECT: KENNETH MURRY
CALCULATED-DESIGNED BY: GUY W. HOWE
CHECKED BY: BARBARA PROCISSI
REVISED BY
DATE REVISED

LAST REVISION 00-00-00
DATE PLOTTED => 05-JAN-2010
TIME PLOTTED => 14:05

Dist	COUNTY	ROUTE	POST MILES TOTAL PROJECT	SHEET No.	TOTAL SHEETS
03	Sac	50	R0.6/17.4	120	233

Barbara Procissi
LICENSED LANDSCAPE ARCHITECT

1-4-10
PLANS APPROVAL DATE

LICENSED LANDSCAPE ARCHITECT
BARBARA PROCISSI
No. 2435
Barbara Procissi
Signature
09-01-10
Renewal Date
Date
STATE OF CALIFORNIA

THE STATE OF CALIFORNIA OR ITS OFFICERS OR AGENTS SHALL NOT BE RESPONSIBLE FOR THE ACCURACY OR COMPLETENESS OF SCANNED COPIES OF THIS PLAN SHEET.

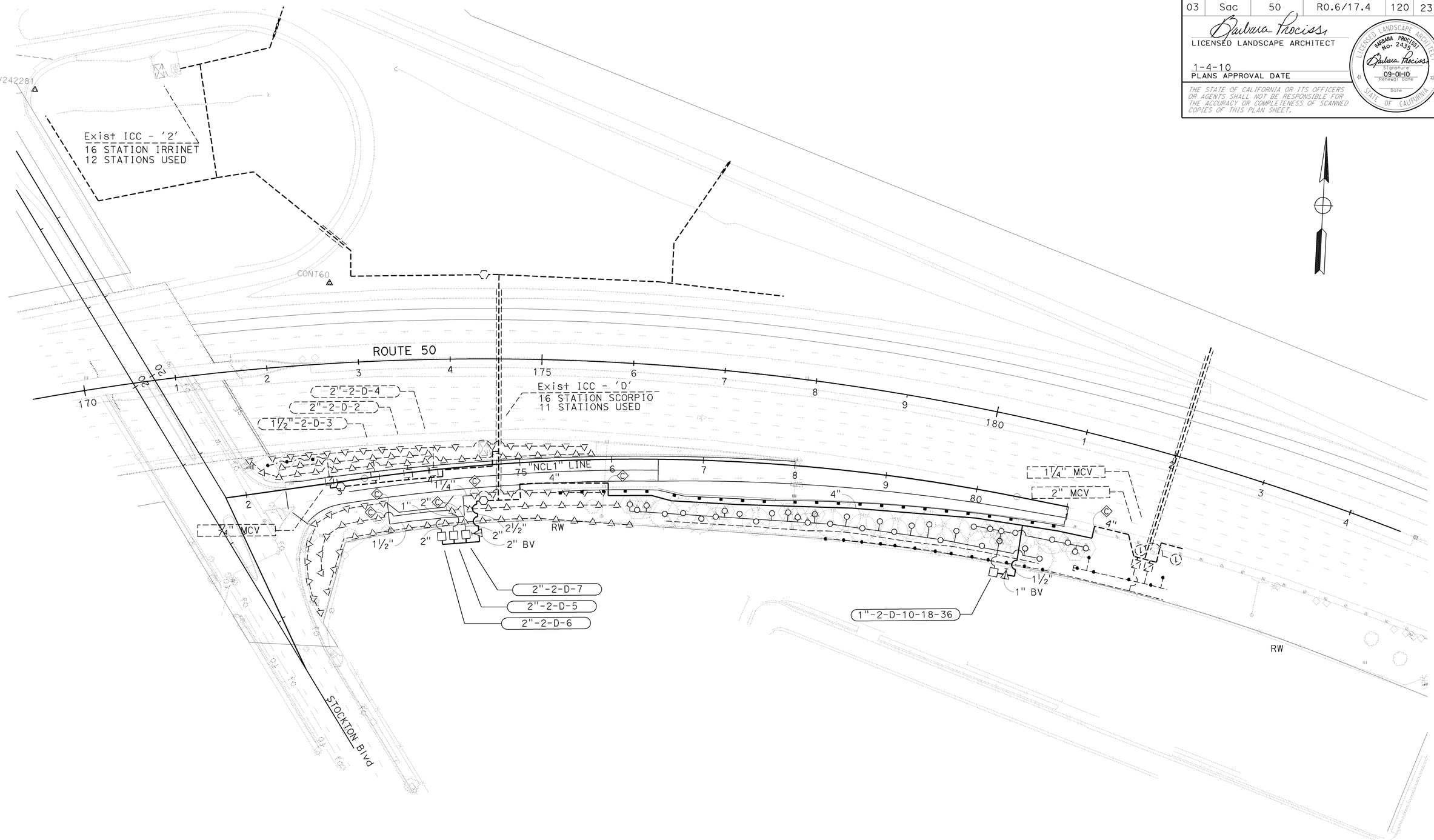

STOCKTON Blvd ON-RAMP IRRIGATION PLAN

SCALE: 1" = 50' **IP-1**

THIS PLAN ACCURATE FOR IRRIGATION WORK ONLY.

STATE OF CALIFORNIA - DEPARTMENT OF TRANSPORTATION
Caltrans® LANDSCAPE ARCHITECTURE

SENIOR LANDSCAPE ARCHITECT: KENNETH MURRY

CALCULATED-DESIGNED BY: GUY W. HOWE
CHECKED BY: BARBARA PROCISSI

REVISED BY / DATE REVISED

LAST REVISION 00-00-00
DATE PLOTTED => 05-JAN-2010
TIME PLOTTED => 14:05

Dist	COUNTY	ROUTE	POST MILES TOTAL PROJECT	SHEET No.	TOTAL SHEETS
03	Sac	50	R0.6/17.4	121	233

Barbara Procissi
LICENSED LANDSCAPE ARCHITECT

1-4-10
PLANS APPROVAL DATE

LICENSED LANDSCAPE ARCHITECT
BARBARA PROCISSI
No. 2435
Barbara Procissi
Signature
09-01-10
Renewal Date
Date
STATE OF CALIFORNIA

THE STATE OF CALIFORNIA OR ITS OFFICERS OR AGENTS SHALL NOT BE RESPONSIBLE FOR THE ACCURACY OR COMPLETENESS OF SCANNED COPIES OF THIS PLAN SHEET.

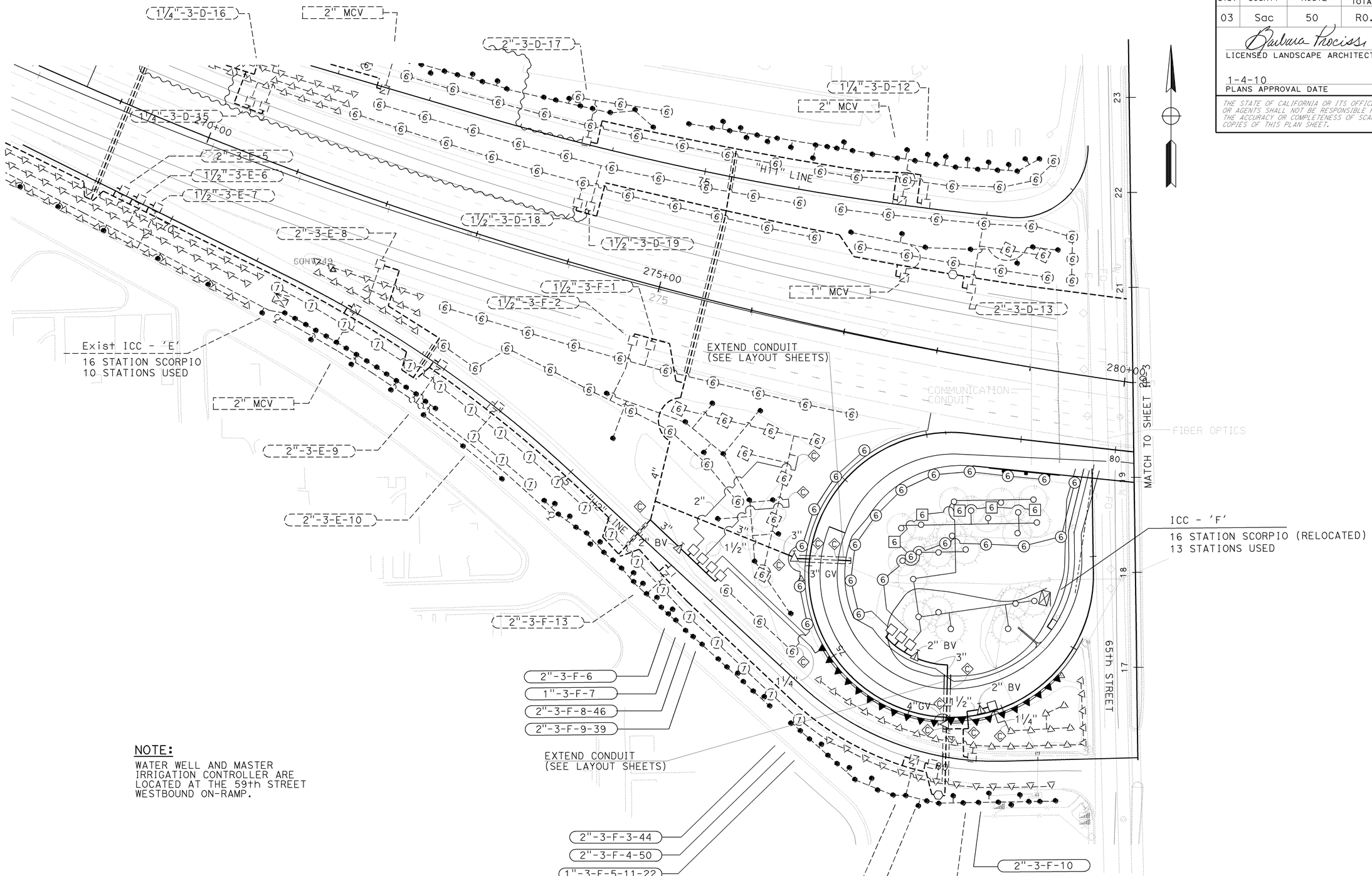

NOTE:
WATER WELL AND MASTER IRRIGATION CONTROLLER ARE LOCATED AT THE 59th STREET WESTBOUND ON-RAMP.

THIS PLAN ACCURATE FOR IRRIGATION WORK ONLY.

65th STREET ON-RAMP IRRIGATION PLAN

SCALE: 1" = 50' **IP-2**

STATE OF CALIFORNIA - DEPARTMENT OF TRANSPORTATION
Caltrans® LANDSCAPE ARCHITECTURE

SENIOR LANDSCAPE ARCHITECT: KENNETH MURRY
CALCULATED-DESIGNED BY: GUY W. HOWE
CHECKED BY: BARBARA PROCISSI
REVISED BY / DATE REVISED

LAST REVISION 00-00-00
DATE PLOTTED => 06-JAN-2010
TIME PLOTTED => 13:21

Dist	COUNTY	ROUTE	POST MILES TOTAL PROJECT	SHEET No.	TOTAL SHEETS
03	Sac	50	R0.6/17.4	122	233

Barbara Procissi
LICENSED LANDSCAPE ARCHITECT

1-4-10
PLANS APPROVAL DATE

LICENSED LANDSCAPE ARCHITECT
BARBARA PROCISSI No. 2435
Barbara Procissi
Signature
09-01-10
Renewal Date
Date
STATE OF CALIFORNIA

THE STATE OF CALIFORNIA OR ITS OFFICERS OR AGENTS SHALL NOT BE RESPONSIBLE FOR THE ACCURACY OR COMPLETENESS OF SCANNED COPIES OF THIS PLAN SHEET.

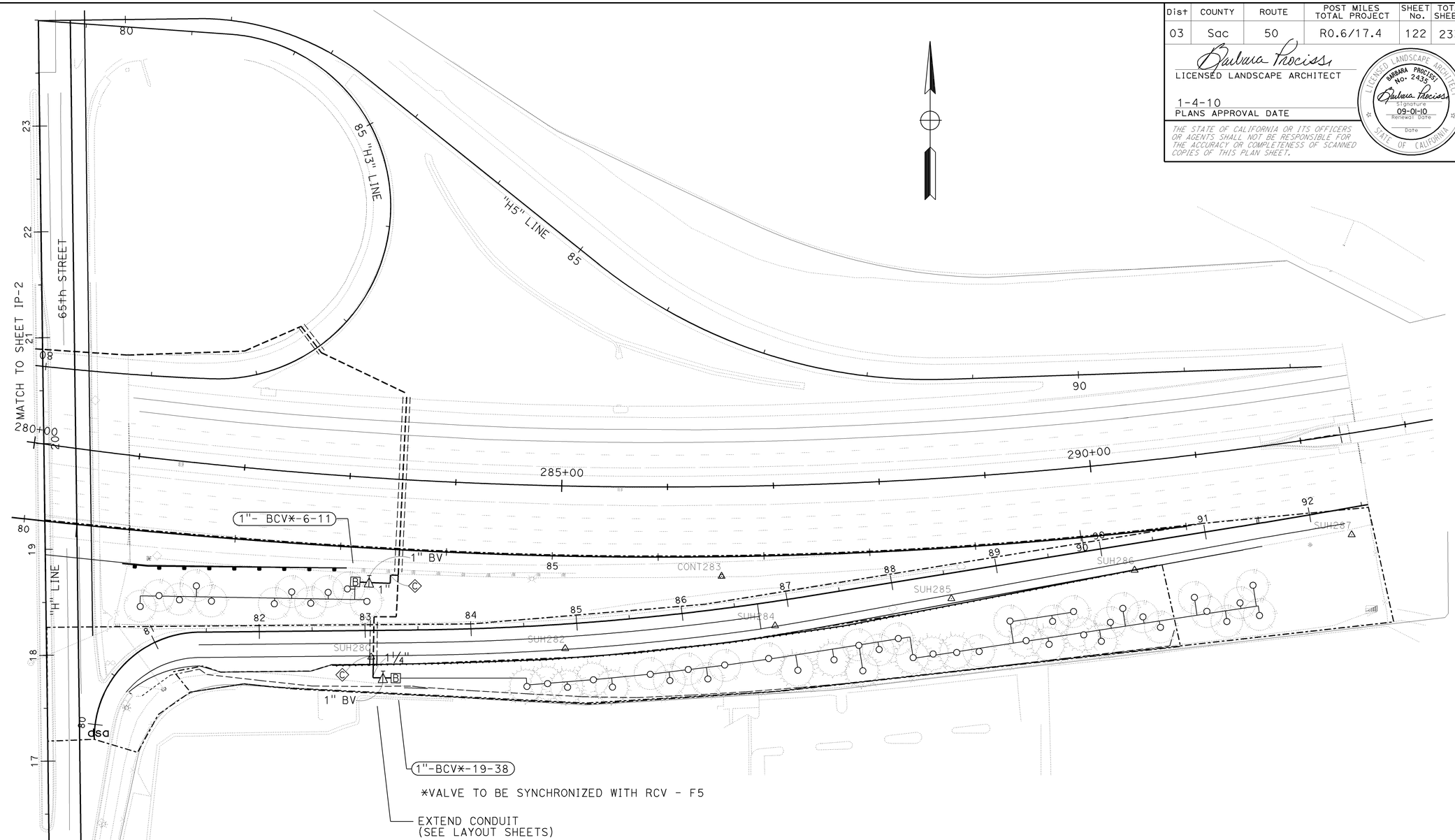

NOTE:
WATER WELL AND MASTER IRRIGATION CONTROLLER ARE LOCATED AT THE 59th STREET WESTBOUND ON-RAMP.

THIS PLAN ACCURATE FOR IRRIGATION WORK ONLY.

65th STREET ON-RAMP IRRIGATION PLAN

SCALE: 1" = 50′ **IP-3**

STATE OF CALIFORNIA - DEPARTMENT OF TRANSPORTATION
Caltrans® LANDSCAPE ARCHITECTURE

SENIOR LANDSCAPE ARCHITECT: KENNETH MURRY
CALCULATED-DESIGNED BY: GUY W. HOWE
CHECKED BY: BARBARA PROCISSI
REVISED BY
DATE REVISED

LAST REVISION 00-00-00
DATE PLOTTED => 06-JAN-2010
TIME PLOTTED => 13:21

Dist	COUNTY	ROUTE	POST MILES TOTAL PROJECT	SHEET No.	TOTAL SHEETS
03	Sac	50	R0.6/17.4	123	233

Barbara Procissi
LICENSED LANDSCAPE ARCHITECT

1-4-10
PLANS APPROVAL DATE

LICENSED LANDSCAPE ARCHITECT
BARBARA PROCISSI No. 2435
Barbara Procissi
Signature
09-01-10
Renewal Date
Date
STATE OF CALIFORNIA

THE STATE OF CALIFORNIA OR ITS OFFICERS OR AGENTS SHALL NOT BE RESPONSIBLE FOR THE ACCURACY OR COMPLETENESS OF SCANNED COPIES OF THIS PLAN SHEET.

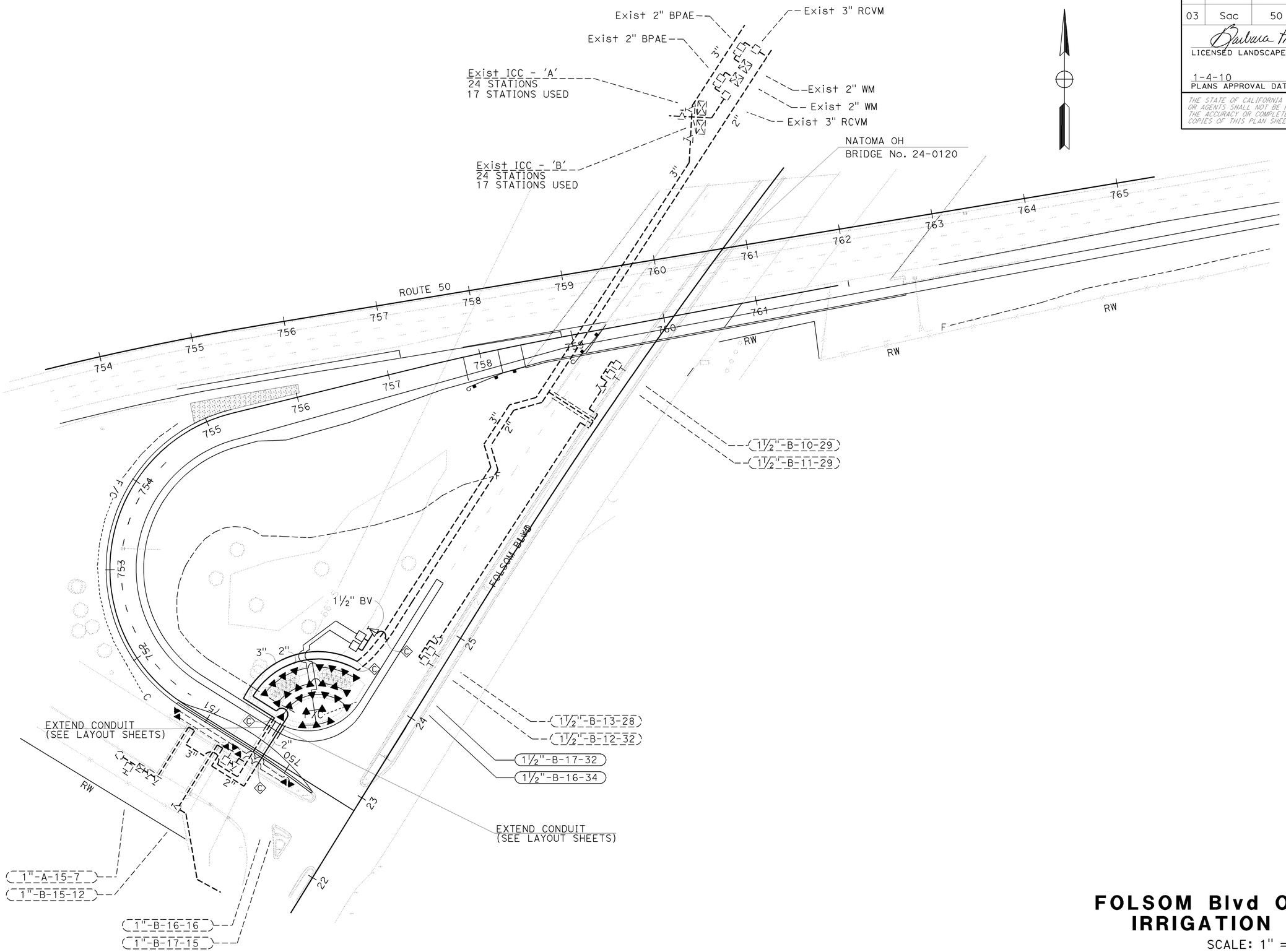

FOLSOM Blvd ON-RAMP IRRIGATION PLAN

SCALE: 1" = 50'

IP-4

THIS PLAN ACCURATE FOR IRRIGATION WORK ONLY.

STATE OF CALIFORNIA - DEPARTMENT OF TRANSPORTATION
Caltrans
LANDSCAPE ARCHITECTURE

SENIOR LANDSCAPE ARCHITECT: KENNETH MURRY

CALCULATED-DESIGNED BY: GUY W. HOWE
CHECKED BY: BARBARA PROCISSI

REVISED BY
DATE REVISED

LAST REVISION 00-00-00
DATE PLOTTED => 06-JAN-2010
TIME PLOTTED => 13:57

Dist	COUNTY	ROUTE	POST MILES TOTAL PROJECT	SHEET No.	TOTAL SHEETS
03	Sac	50	R0.6/17.4	124	233

Barbara Procissi
LICENSED LANDSCAPE ARCHITECT

1-4-10
PLANS APPROVAL DATE

LICENSED LANDSCAPE ARCHITECT
BARBARA PROCISSI No. 2435
Barbara Procissi
Signature
09-01-10
Renewal Date
Date
STATE OF CALIFORNIA

THE STATE OF CALIFORNIA OR ITS OFFICERS OR AGENTS SHALL NOT BE RESPONSIBLE FOR THE ACCURACY OR COMPLETENESS OF ELECTRONIC COPIES OF THIS PLAN SHEET.

SPRINKLER SCHEDULE

SYMBOL	TYPE	DESCRIPTION	SPRAY PATTERN	OPERATING PRESSURE (PSI)	PRESSURE COMPENSATING	PLUS/MINUS 5% ② DISCHARGE GALLONS PER MINUTE (GPM)	DISCHARGE GALLONS PER HOUR (GPH)	RADIUS (Ft)	WIDTH × LENGTH (Ft)	MATERIAL	INLET CONNECTION (NPT INCH)	POSITIVE-LOCKING ADJ ARC STOP	BACKSPLASH PREVENTER	DIFFUSER PIN	DISTANCE CONTROL FLAP	ADJ DISCHARGE	RISER TYPE	RISER MATERIAL PLASTIC	RISER MATERIAL GALVANIZED	RISER SIZE (IPS INCH)	RISER HEIGHT (INCH)	RISER FLOW SHUTOFF DEVICE	⑤ SWING JOINT (TYPE)	RISER SUPPORT	SPRINKLER PROTECTOR (TYPE)	REMARKS
⑥	A-6	GEAR DRIVEN	P	40	--	4.9	--	40	--	PL	¾	--	--	--	--	--	VI	X	--	¾	--	--	--	--	I	12" POP-UP
6	A-6	GEAR DRIVEN	F	40	--	4.9	--	40	--	PL	¾	--	--	--	--	--	VI	X	--	¾	--	--	--	--	I	12" POP-UP
▲	B-2	SHRUB SPRAY	P/F	30	--	1.8/3.7	--	15	--	PL	½	--	--	--	--	--	VI	X	--	½	--	--	--	--	I	12" POP-UP
○	C-2	FLOOD BUBBLER	--	25	X	0.5	--	--	--	PL	½	--	--	--	--	--	V	X	--	½	--	--	--	--	--	ONE BUBBLER PER PLANT

X IN BOX DENOTES REQUIREMENT

APPLICABLE WHEN CIRCLED BELOW:

1 - See Special Provisions.
2 - If a pressure compensating device is specified, the discharge and radii shown reflect its use.
3 - Arc Stop shall be fitted with a nut and bolt.
4 - Vinyl-coated cast iron housing.
5 - Swing Joints required adjacent to shoulders, curbs, sidewalks, and dikes.
6 - Unless otherwise shown on plans.

ABBREVIATIONS

F	full circle	Ft	feet/foot
P	part circle	GPM	gallons per minute
F/P	full/part circle	GPH	gallons per hour
Q	quarter circle	Adj	adjustable
T	third circle	PL	plastic
H	half circle	B/B	brass/bronze
TT	two third circle	B/PL	brass/plastic
TQ	three quarter circle	B/B/PL	brass/bronze/plastic
CST	center strip	NPT	national pipe thread
SST	side strip	IPS	iron pipe size
EST	end strip	PSI	pounds per square inch

NOTES:

SPRINKLERS TYPE A-6 SHALL BE PLACED A MINIMUM OF 8 FEET FROM EDGE OF PAVEMENT, 2 FEET FROM CURBS, DIKES AND FENCES AND A MINIMUM OF 1.5 FEET FROM SIDEWALKS AND PAVED AREAS

SPRINKLERS TYPE B-2 SHALL BE PLACED A MINIMUM OF 6 FEET FROM EDGE OF PAVEMENT, 2 FEET FROM CURBS, DIKES, METAL BEAM GUARD RAILS, AND FENCES AND A MINIMUM OF 1.5 FEET FROM SIDEWALKS AND PAVED AREAS

NEW SUPPLY LINE (MAIN) SHALL BE PLACED A MINIMUM OF 6 FEET FROM THE ROOT BALL OF TYPE B PLANTS

NEW SUPPLY LINE (LATERAL) SHALL BE PLACED A MINIMUM OF 3 FEET FROM THE ROOT BALL OF TYPE B PLANTS

NEW REMOTE CONTROL VALVES ON SLOPES LESS THAN 3:1 SHALL BE PLACED A MINIMUM OF 15 FEET FROM THE EDGE OF PAVEMENT, UNLESS BEHIND CURBS, SIDEWALKS OR GUARD RAILS. WHERE SPACE IS LIMITED VALVES SHALL BE PLACED A MINIMUM OF 3 FEET FROM THE R/W FENCE.

PIPE SIZING CHART

PIPE SIZING FOR TYPE A SPRINKLERS

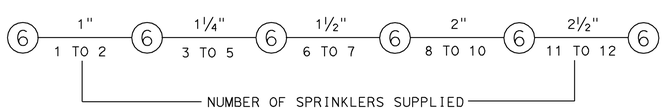

PIPE SIZING FOR TYPE B-2 SPRINKLERS

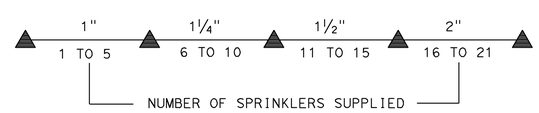

PIPE SIZING FOR TYPE C SPRINKLERS

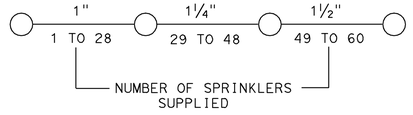

LANDSCAPE DETAILS

NO SCALE

LD-1

REVISED BY	DATE REVISED

GUY W. HOWE — BARBARA PROCISSI
CALCULATED-DESIGNED BY — CHECKED BY
SENIOR LANDSCAPE ARCHITECT — KENNETH MURRY

STATE OF CALIFORNIA - DEPARTMENT OF TRANSPORTATION
Caltrans® LANDSCAPE ARCHITECTURE

LAST REVISION 00-00-00
DATE PLOTTED => 05-JAN-2010
TIME PLOTTED => 14:06

Dist	COUNTY	ROUTE	POST MILES TOTAL PROJECT	SHEET No.	TOTAL SHEETS
03	Sac	50	R0.6/17.4	125	233

REGISTERED ELECTRICAL ENGINEER 8-18-09

1-4-10
PLANS APPROVAL DATE

REGISTERED PROFESSIONAL ENGINEER JAGTAR S. DHALIWAL No. E16915 Exp. 06/30/11 ELECTRICAL STATE OF CALIFORNIA

THE STATE OF CALIFORNIA OR ITS OFFICERS OR AGENTS SHALL NOT BE RESPONSIBLE FOR THE ACCURACY OR COMPLETENESS OF ELECTRONIC COPIES OF THIS PLAN SHEET.

NOTE:
FOR COMPLETE RIGHT OF WAY AND ACCURATE ACCESS DATA, SEE RIGHT OF WAY RECORD MAPS AT DISTRICT OFFICE.

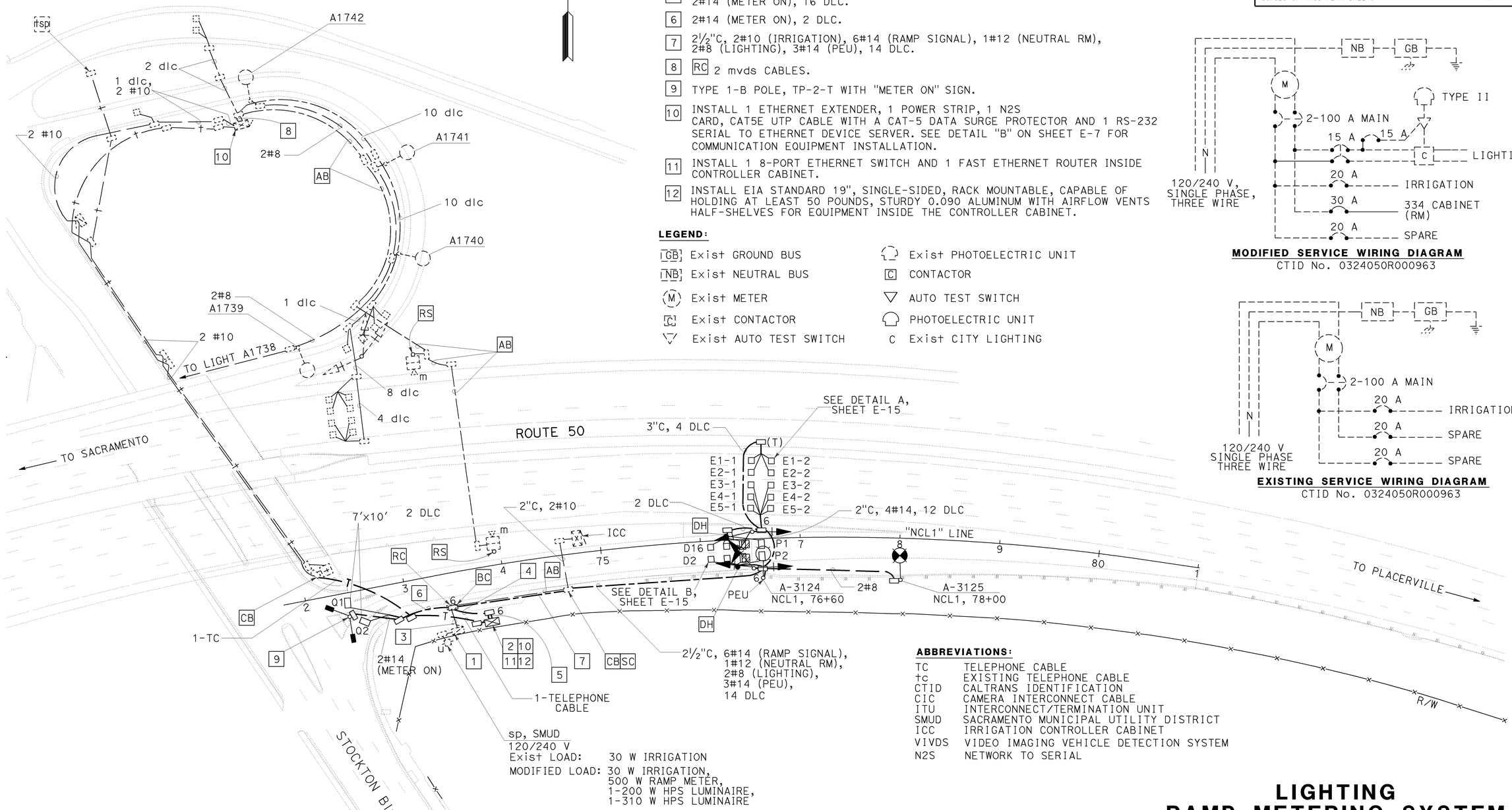

sp, SMUD
120/240 V
Exist LOAD: 30 W IRRIGATION
MODIFIED LOAD: 30 W IRRIGATION, 500 W RAMP METER, 1-200 W HPS LUMINAIRE, 1-310 W HPS LUMINAIRE

PROJECT NOTES (THIS SHEET ONLY):

1. Exist TYPE III-AR SERVICE EQUIPMENT ENCLOSURE CTID No. 0324050R000963, FOR SERVICE WIRING DIAGRAM SEE THIS SHEET.
2. INSTALL STATE-FURNISHED 334 CONTROLLER CABINET AND 2070 CONTROLLER WITH 6A MODEM.
3. Exist 2"C, 2#10 (IRRIGATION), ADD 2#8 (334 CABINET), 2#8 (LIGHTING), 3#14 (PEU).
4. 3"C, 2#8 (334 CABINET), 6#14, (RAMP SIGNAL), 1#12 (NEUTRAL RM), 2#14 (METER ON), 16 DLC.
5. 2-3"C, 2#8 (334 CABINET), 6#14 (RAMP SIGNAL), 1#12 (NEUTRAL RM), 2#14 (METER ON), 16 DLC.
6. 2#14 (METER ON), 2 DLC.
7. 2½"C, 2#10 (IRRIGATION), 6#14 (RAMP SIGNAL), 1#12 (NEUTRAL RM), 2#8 (LIGHTING), 3#14 (PEU), 14 DLC.
8. RC 2 mvds CABLES.
9. TYPE 1-B POLE, TP-2-T WITH "METER ON" SIGN.
10. INSTALL 1 ETHERNET EXTENDER, 1 POWER STRIP, 1 N2S CARD, CAT5E UTP CABLE WITH A CAT-5 DATA SURGE PROTECTOR AND 1 RS-232 SERIAL TO ETHERNET DEVICE SERVER. SEE DETAIL "B" ON SHEET E-7 FOR COMMUNICATION EQUIPMENT INSTALLATION.
11. INSTALL 1 8-PORT ETHERNET SWITCH AND 1 FAST ETHERNET ROUTER INSIDE CONTROLLER CABINET.
12. INSTALL EIA STANDARD 19", SINGLE-SIDED, RACK MOUNTABLE, CAPABLE OF HOLDING AT LEAST 50 POUNDS, STURDY 0.090 ALUMINUM WITH AIRFLOW VENTS HALF-SHELVES FOR EQUIPMENT INSIDE THE CONTROLLER CABINET.

LEGEND:

- GB Exist GROUND BUS
- NB Exist NEUTRAL BUS
- M Exist METER
- C Exist CONTACTOR
- Exist AUTO TEST SWITCH
- Exist PHOTOELECTRIC UNIT
- C CONTACTOR
- AUTO TEST SWITCH
- PHOTOELECTRIC UNIT
- C Exist CITY LIGHTING

MODIFIED SERVICE WIRING DIAGRAM
CTID No. 0324050R000963

EXISTING SERVICE WIRING DIAGRAM
CTID No. 0324050R000963

ABBREVIATIONS:

TC	TELEPHONE CABLE
tc	EXISTING TELEPHONE CABLE
CTID	CALTRANS IDENTIFICATION
CIC	CAMERA INTERCONNECT CABLE
ITU	INTERCONNECT/TERMINATION UNIT
SMUD	SACRAMENTO MUNICIPAL UTILITY DISTRICT
ICC	IRRIGATION CONTROLLER CABINET
VIVDS	VIDEO IMAGING VEHICLE DETECTION SYSTEM
N2S	NETWORK TO SERIAL

LIGHTING RAMP METERING SYSTEM COMMUNICATIONS SYSTEM (STOCKTON Blvd)

SCALE: 1" = 50'

E-1

THIS PLAN IS ACCURATE FOR ELECTRICAL WORK ONLY.

STATE OF CALIFORNIA - DEPARTMENT OF TRANSPORTATION
Caltrans OFFICE OF ELECTRICAL DESIGN SACRAMENTO

FUNCTIONAL SUPERVISOR: NELSON LEE
CALCULATED-DESIGNED BY: JAMIE KOJAK
CHECKED BY: JAGTAR DHALIWAL
REVISED BY / DATE REVISED

LAST REVISION 08-14-09 | DATE PLOTTED => 11-JAN-2010 | TIME PLOTTED => 09:22

Dist	COUNTY	ROUTE	POST MILES TOTAL PROJECT	SHEET No.	TOTAL SHEETS
03	Sac	50	R0.6/17.4	126	233

REGISTERED ELECTRICAL ENGINEER 8-18-09

1-4-10
PLANS APPROVAL DATE

REGISTERED PROFESSIONAL ENGINEER JAGTAR S. DHALIWAL No. E16915 Exp. 06/30/11 ELECTRICAL STATE OF CALIFORNIA

THE STATE OF CALIFORNIA OR ITS OFFICERS OR AGENTS SHALL NOT BE RESPONSIBLE FOR THE ACCURACY OR COMPLETENESS OF ELECTRONIC COPIES OF THIS PLAN SHEET.

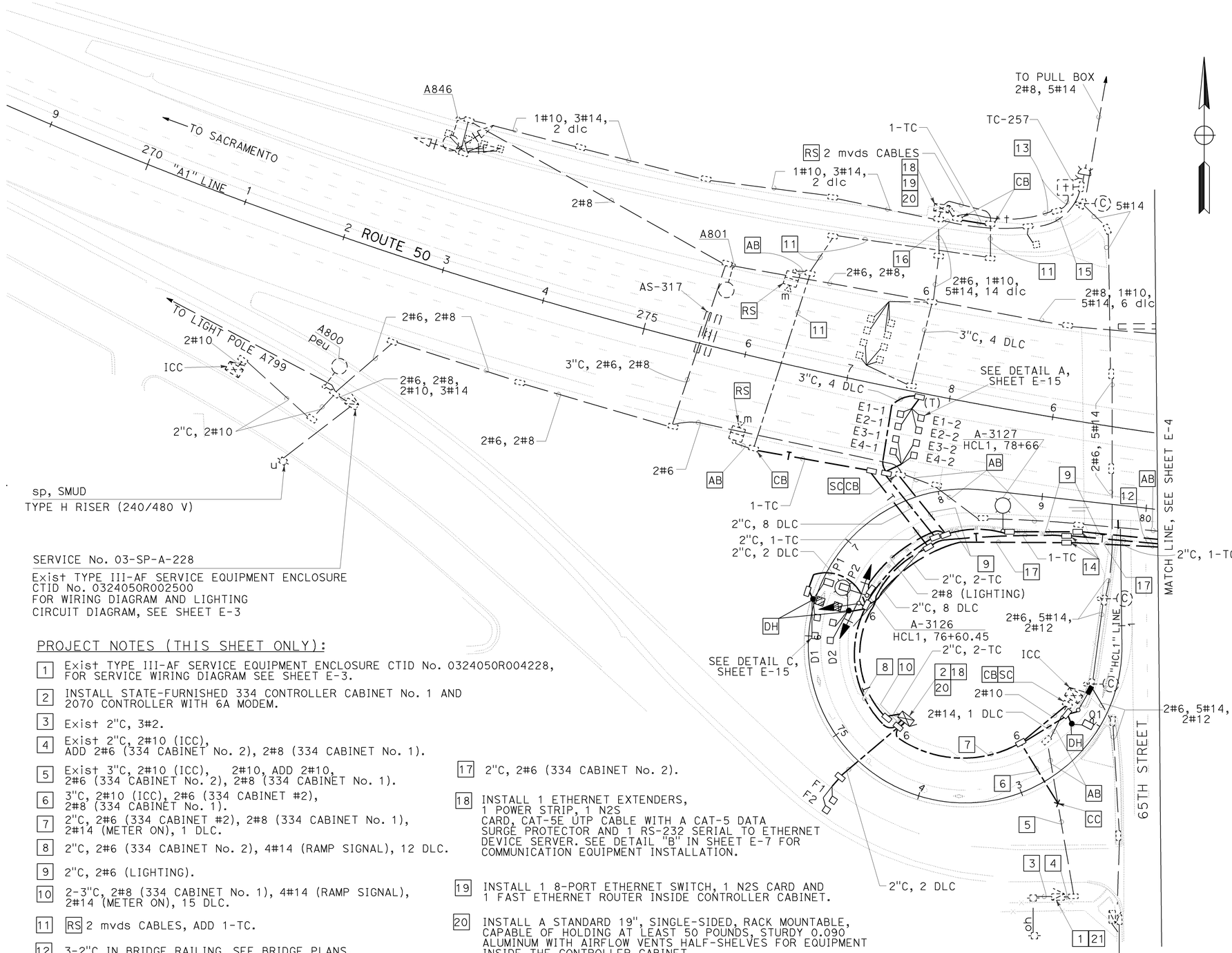

PROJECT NOTES (THIS SHEET ONLY):

1. Exist TYPE III-AF SERVICE EQUIPMENT ENCLOSURE CTID No. 0324050R004228, FOR SERVICE WIRING DIAGRAM SEE SHEET E-3.
2. INSTALL STATE-FURNISHED 334 CONTROLLER CABINET No. 1 AND 2070 CONTROLLER WITH 6A MODEM.
3. Exist 2"C, 3#2.
4. Exist 2"C, 2#10 (ICC), ADD 2#6 (334 CABINET No. 2), 2#8 (334 CABINET No. 1).
5. Exist 3"C, 2#10 (ICC), 2#10, ADD 2#10, 2#6 (334 CABINET No. 2), 2#8 (334 CABINET No. 1).
6. 3"C, 2#10 (ICC), 2#6 (334 CABINET #2), 2#8 (334 CABINET No. 1).
7. 2"C, 2#6 (334 CABINET #2), 2#8 (334 CABINET No. 1), 2#14 (METER ON), 1 DLC.
8. 2"C, 2#6 (334 CABINET No. 2), 4#14 (RAMP SIGNAL), 12 DLC.
9. 2"C, 2#6 (LIGHTING).
10. 2-3"C, 2#8 (334 CABINET No. 1), 4#14 (RAMP SIGNAL), 2#14 (METER ON), 15 DLC.
11. RS 2 mvds CABLES, ADD 1-TC.
12. 3-2"C IN BRIDGE RAILING, SEE BRIDGE PLANS.
13. ADD 1-TC (6-PAIRS).
14. SEE RSP ES-9A DETAIL I.
15. 2#10, 2#14.
16. 2#10, 2#14, 1 dlc.
17. 2"C, 2#6 (334 CABINET No. 2).
18. INSTALL 1 ETHERNET EXTENDERS, 1 POWER STRIP, 1 N2S CARD, CAT-5E UTP CABLE WITH A CAT-5 DATA SURGE PROTECTOR AND 1 RS-232 SERIAL TO ETHERNET DEVICE SERVER. SEE DETAIL "B" IN SHEET E-7 FOR COMMUNICATION EQUIPMENT INSTALLATION.
19. INSTALL 1 8-PORT ETHERNET SWITCH, 1 N2S CARD AND 1 FAST ETHERNET ROUTER INSIDE CONTROLLER CABINET.
20. INSTALL A STANDARD 19", SINGLE-SIDED, RACK MOUNTABLE, CAPABLE OF HOLDING AT LEAST 50 POUNDS, STURDY 0.090 ALUMINUM WITH AIRFLOW VENTS HALF-SHELVES FOR EQUIPMENT INSIDE THE CONTROLLER CABINET.
21. REPLACE 30 A, 240 V, 2 POLE, CB WITH 2-30 A, 120 V, I POLE, CB.

THIS PLAN IS ACCURATE FOR ELECTRICAL WORK ONLY.

MODIFY LIGHTING
RAMP METERING SYSTEM
COMMUNICATIONS SYSTEM
(65TH STREET)

SCALE 1" = 50'

E-2

STATE OF CALIFORNIA - DEPARTMENT OF TRANSPORTATION
Caltrans® OFFICE OF ELECTRICAL DESIGN SACRAMENTO

FUNCTIONAL SUPERVISOR: NELSON LEE
CALCULATED-DESIGNED BY: JAMIE KOJAK
CHECKED BY: JAGTAR DHALIWAL
REVISED BY / DATE REVISED

LAST REVISION 08-14-09 | DATE PLOTTED => 11-JAN-2010 | TIME PLOTTED => 09:22

Dist	COUNTY	ROUTE	POST MILES TOTAL PROJECT	SHEET No.	TOTAL SHEETS
03	Sac	50	R0.6/17.4	127	233

REGISTERED ELECTRICAL ENGINEER 8-18-09

1-4-10
PLANS APPROVAL DATE

REGISTERED PROFESSIONAL ENGINEER JAGTAR S. DHALIWAL No. E16915 Exp. 06/30/11 ELECTRICAL STATE OF CALIFORNIA

THE STATE OF CALIFORNIA OR ITS OFFICERS OR AGENTS SHALL NOT BE RESPONSIBLE FOR THE ACCURACY OR COMPLETENESS OF ELECTRONIC COPIES OF THIS PLAN SHEET.

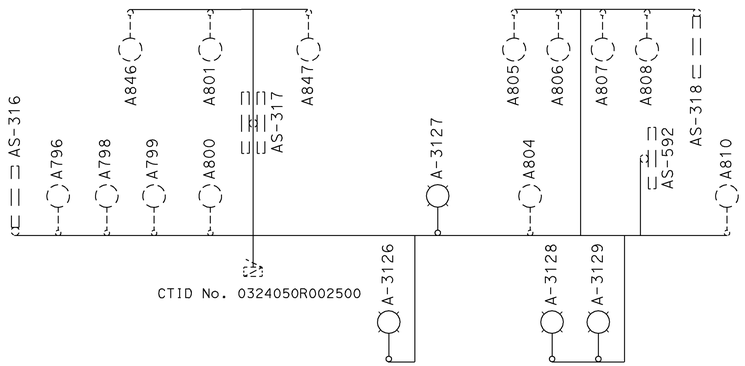

LIGHTING CIRCUIT DIAGRAM
CTID No. 0324050R002500

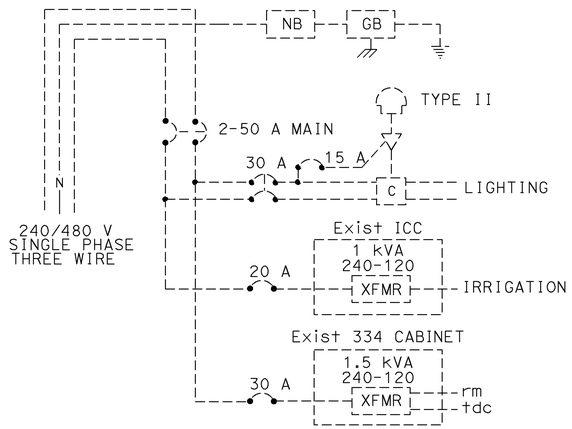

SERVICE WIRING DIAGRAM
CTID No. 0324050R002500

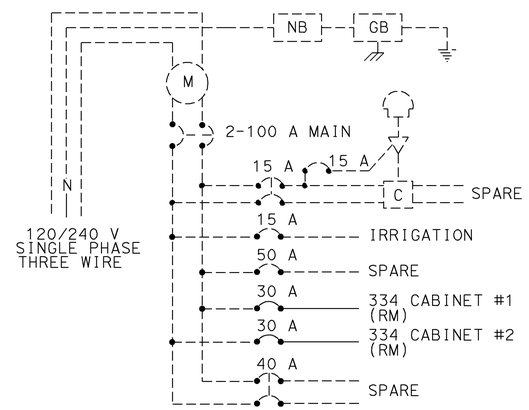

MODIFIED SERVICE WIRING DIAGRAM
CTID No. 0324050R004228

ELECTRICAL DETAILS

NO SCALE

E-3

THIS PLAN IS ACCURATE FOR ELECTRICAL WORK ONLY.

REVISED BY	DATE REVISED

CALCULATED-DESIGNED BY: JAMIE KOJAK
CHECKED BY: JAGTAR DHALIWAL
FUNCTIONAL SUPERVISOR: NELSON LEE

STATE OF CALIFORNIA - DEPARTMENT OF TRANSPORTATION
Caltrans® OFFICE OF ELECTRICAL DESIGN
SACRAMENTO

LAST REVISION 08-14-09
DATE PLOTTED => 11-JAN-2010
TIME PLOTTED => 13:18

Dist	COUNTY	ROUTE	POST MILES TOTAL PROJECT	SHEET No.	TOTAL SHEETS
03	Sac	50	R0.6/17.4	128	233

REGISTERED ELECTRICAL ENGINEER 8-18-09

1-4-10
PLANS APPROVAL DATE

REGISTERED PROFESSIONAL ENGINEER JAGTAR S. DHALIWAL No. E16915 Exp. 06/30/11 ELECTRICAL STATE OF CALIFORNIA

THE STATE OF CALIFORNIA OR ITS OFFICERS OR AGENTS SHALL NOT BE RESPONSIBLE FOR THE ACCURACY OR COMPLETENESS OF ELECTRONIC COPIES OF THIS PLAN SHEET.

NOTE:
FOR COMPLETE RIGHT OF WAY AND ACCURATE ACCESS DATA, SEE RIGHT OF WAY RECORD MAPS AT DISTRICT OFFICE.

PROJECT NOTES (THIS SHEET ONLY):

1. INSTALL STATE-FURNISHED 334 CONTROLLER CABINET #2 AND 2070 CONTROLLER WITH 6A MODEM.
2. 2"C, 2#6 (LIGHTING).
3. SEE RSP ES-9A DETAIL I.
4. 3-2"C IN BRIDGE RAILING.
5. 2"C, 2#6 (334 CABINET #2).
6. TO UNDERCROSSING SOFFIT FIXTURE.
7. CC IN BRIDGE SLAB, RC 9A PULL BOX IN RAILING, SC 2#12 (SIGN LIGHTING), SD LOCATED ON SW CORNER OF EB OFF-RAMP, SERVICE No. 03-SP-A-T-67.
8. INSTALL 1 ETHERNET EXTENDER, CAT-5E UTP CABLE WITH CAT-5 DATA SURGE PROTECTION AND 1 POWER STRIP INSIDE THE CONTROLLER CABINET. SEE DETAIL "B" ON SHEET E-7 FOR COMMUNICATION EQUIPMENT INSTALLATION.
9. INSTALL EIA STANDARD 19", SINGLE-SIDED, RACK MOUNTABLE, CAPABLE OF HOLDING AT LEAST 50 POUNDS, STURDY 0.090 ALUMINUM WITH AIRFLOW VENTS AND HALF-SHELVES FOR EQUIPMENT INSIDE THE CONTROLLER CABINET.

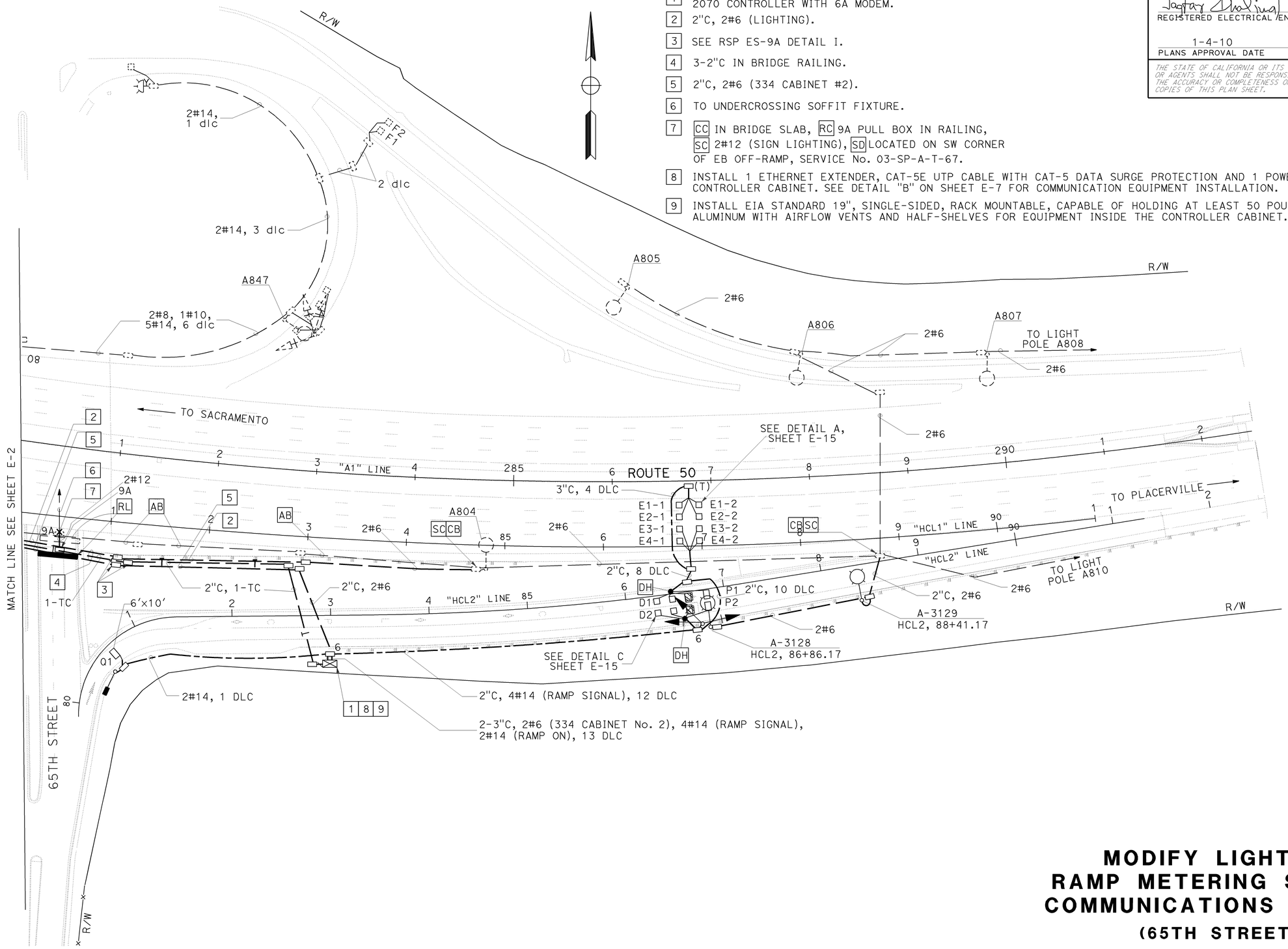

MODIFY LIGHTING
RAMP METERING SYSTEM
COMMUNICATIONS SYSTEM
(65TH STREET)

SCALE: 1" = 50'

E-4

THIS PLAN ACCURATE FOR ELECTRICAL WORK ONLY.

STATE OF CALIFORNIA - DEPARTMENT OF TRANSPORTATION
Caltrans® OFFICE OF ELECTRICAL DESIGN SACRAMENTO

FUNCTIONAL SUPERVISOR: NELSON LEE
CALCULATED-DESIGNED BY: JAMIE KOJAK
CHECKED BY: JAGTAR DHALIWAL
REVISED BY / DATE REVISED

LAST REVISION 08-06-09 | DATE PLOTTED => 11-JAN-2010 | TIME PLOTTED => 11:12

Dist	COUNTY	ROUTE	POST MILES TOTAL PROJECT	SHEET No.	TOTAL SHEETS
03	Sac	50	R0.6/17.4	129	233

REGISTERED ELECTRICAL ENGINEER 8-18-09

1-4-10
PLANS APPROVAL DATE

REGISTERED PROFESSIONAL ENGINEER JAGTAR S. DHALIWAL No. E16915 Exp. 06/30/11 ELECTRICAL STATE OF CALIFORNIA

THE STATE OF CALIFORNIA OR ITS OFFICERS OR AGENTS SHALL NOT BE RESPONSIBLE FOR THE ACCURACY OR COMPLETENESS OF ELECTRONIC COPIES OF THIS PLAN SHEET.

NOTE: FOR COMPLETE RIGHT OF WAY AND ACCURATE ACCESS DATA, SEE RIGHT OF WAY RECORD MAPS AT DISTRICT OFFICE.

PROJECT NOTES (THIS SHEET ONLY):

1. TYPE III-AF SERVICE EQUIPMENT ENCLOSURE, CTID No. 0324050R007760.
2. RL 334 CABINET (rm), 334 CABINET (cctv), 334 CABINET (har), SEE SHEET E-6.
3. Exist 2#8 (rm1), 2#8 (cctv), 2#8 (har).
4. AB CONDUIT, RR CONDUCTORS AND CABLE.
5. Exist 1-CIC, PULL 1-CIC AND COIL CONDUCTOR. REINSTALL AS SHOWN ON SHEET E-6.
6. Exist 1-tc (rm1, cctv, har).
7. FOR NEW CONDUIT CONNECTION AND RUN, SEE SHEET E-6.
8. Exist 2#8, mt, 6 dlc. RC 6 dlc.
9. RC 6 dlc.
10. Exist 1-sic, 1-fo CABLE, RC 1 sic, PULL fo CABLE AND COIL. REINSTALL AS SHOWN ON SHEET E-6.
11. Exist 1-fo CABLE, PULL fo CABLE AND COIL FIBER OPTIC CABLE, REINSTALL AS SHOWN ON SHEET E-6.
12. Exist 1-tc (rm1, cctv, har), 1-tc (rm2), 1-tc (334 CONTROLLER CABINET).
13. AB CONDUIT, PULL fo CABLE AND COIL IN PULL BOX "B", REINSTALL AS SHOWN ON SHEET E-6.

NOTE:

PER COUNTY REQUEST, sic AND fo CABLE REPLACEMENT AND INSTALLATION SHALL BE PERFORMED AT NIGHT OR ON THE WEEKEND, CONTACT SACRAMENTO DEPARTMENT OF TRANSPORTATION (916-875-5824) AT LEAST 3 WORKING DAYS PRIOR TO ACCESSING THE CONTROLLER CABINETS.

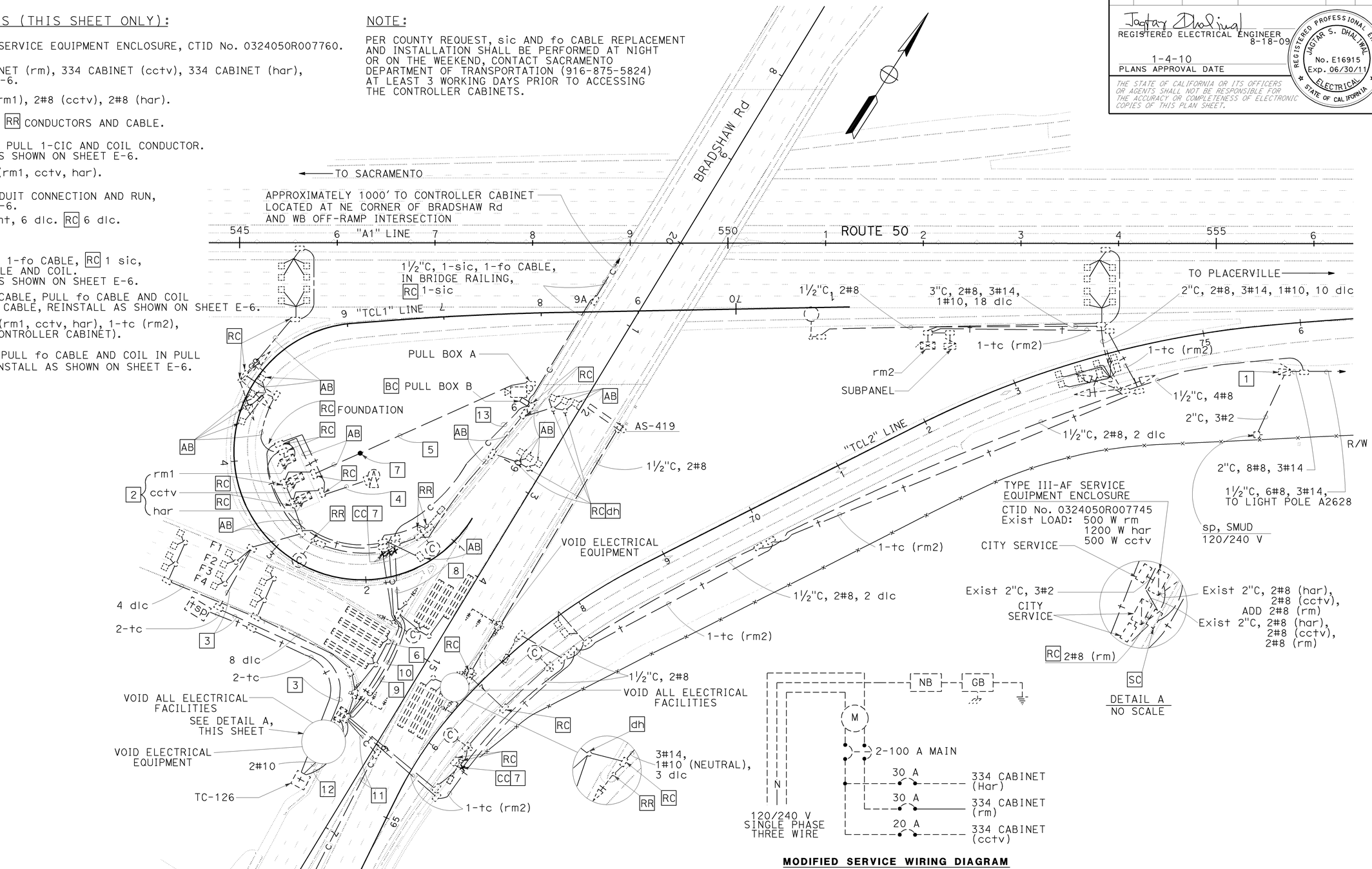

MODIFIED SERVICE WIRING DIAGRAM
CTID No. 0324050R007745

THIS PLAN IS ACCURATE FOR ELECTRICAL WORK ONLY.

MODIFY RAMP METERING SYSTEM
(BRADSHAW Rd)

SCALE: 1" = 50'

E-5

STATE OF CALIFORNIA - DEPARTMENT OF TRANSPORTATION
OFFICE OF ELECTRICAL DESIGN
SACRAMENTO

FUNCTIONAL SUPERVISOR: NELSON LEE
CALCULATED-DESIGNED BY: JAMIE KOJAK
CHECKED BY: JAGTAR DHALIWAL
REVISED BY / DATE REVISED

LAST REVISION 08-14-09 | DATE PLOTTED => 11-JAN-2010 | TIME PLOTTED => 09:23

Dist	COUNTY	ROUTE	POST MILES TOTAL PROJECT	SHEET No.	TOTAL SHEETS
03	Sac	50	R0.6/17.4	130	233

REGISTERED ELECTRICAL ENGINEER 8-18-09

1-4-10
PLANS APPROVAL DATE

REGISTERED PROFESSIONAL ENGINEER JAGTAR S. DHALIWAL No. E16915 Exp. 06/30/11 ELECTRICAL STATE OF CALIFORNIA

THE STATE OF CALIFORNIA OR ITS OFFICERS OR AGENTS SHALL NOT BE RESPONSIBLE FOR THE ACCURACY OR COMPLETENESS OF ELECTRONIC COPIES OF THIS PLAN SHEET.

NOTE: FOR COMPLETE RIGHT OF WAY AND ACCURATE ACCESS DATA, SEE RIGHT OF WAY RECORD MAPS AT DISTRICT OFFICE.

PROJECT NOTES (THIS SHEET ONLY):

1. Exist 1-tc (rm1, cctv, har), 1-tc (rm2), 1-tc (334 CONTROLLER CABINET).
2. REINSTALL 1-fo CABLE.
3. Exist 2#8 (rm1), 2#8 (cctv), 2#8 (har).
4. ADD 6 DLC.
5. REINSTALL 1-fo CABLE, ADD 1 SIC.
6. 1-tc (RM1, CCTV, HAR).
7. ADD 6 DLC, 2#8.
8. 1-3"C, 3-TC, 1-3"C, 2#8, 9#14, 7 DLC.
9. 2-2"C, 1#6 (BARE COPPER), 1-ANTENNA COAXIAL CABLE, 2#8.
10. 1-2"C, 2#8 (RM1), 5 DLC.
11. 2"C, 1-SIC, 1-FO CABLE.
12. 2"C, 1#6 (BARE COPPER), 1-ANTENNA COAXIAL CABLE.
13. 2"C, 1 CIC.
14. TYPE III-AF SERVICE EQUIPMENT ENCLOSURE, CTID No. 0324050R007760.
15. 3"C, 2#8, 3#14, 1#10, 18 dlc, ADD 7#14.
16. INSTALL 1 8-PORT MANAGED ETHERNET EXTENDER, 6 POWER STRIPS, 3 8-PORT ETHERNET SWITCHES, 1 FAST ETHERNET ROUTER, 4 RS-232 SERIAL TO ETHERNET DEVICE SERVERS, 3 ETHERNET POWER CONTROLLERS AND 6 CAT5E UTP CABLES.
17. 2#8 (CCTV), 2#8 (HAR).
18. INSTALL 1 8-PORT MANAGED ETHERNET EXTENDER, 1 FAST ETHERNET ROUTER, CAT5E UTP CABLE WITH CAT-5 DATA SURGE PROTECTION, 1 8-PORT ETHERNET SWITCH AND 1 POWER STRIP IN EXISTING rm2 (Sta 550+40).
19. INSTALL 1 ETHERNET EXTENDER, 1 POWER STRIP, 1 N2S CARD AND 1 ETHERNET POWER CONTROLLER. SEE DETAIL B ON SHEET E-7 FOR COMMUNICATION EQUIPMENT INSTALLATION.
20. INSTALL EIA STANDARD 19" HALF-SHELVES, SINGLE-SIDED, RACK-MOUNTABLE, CAPABLE OF HOLDING AT LEAST 50 POUNDS, STURDY 0.090 ALUMINUM WITH AIRFLOW VENTS FOR EQUIPMENT INSIDE THE CONTROLLER CABINET.

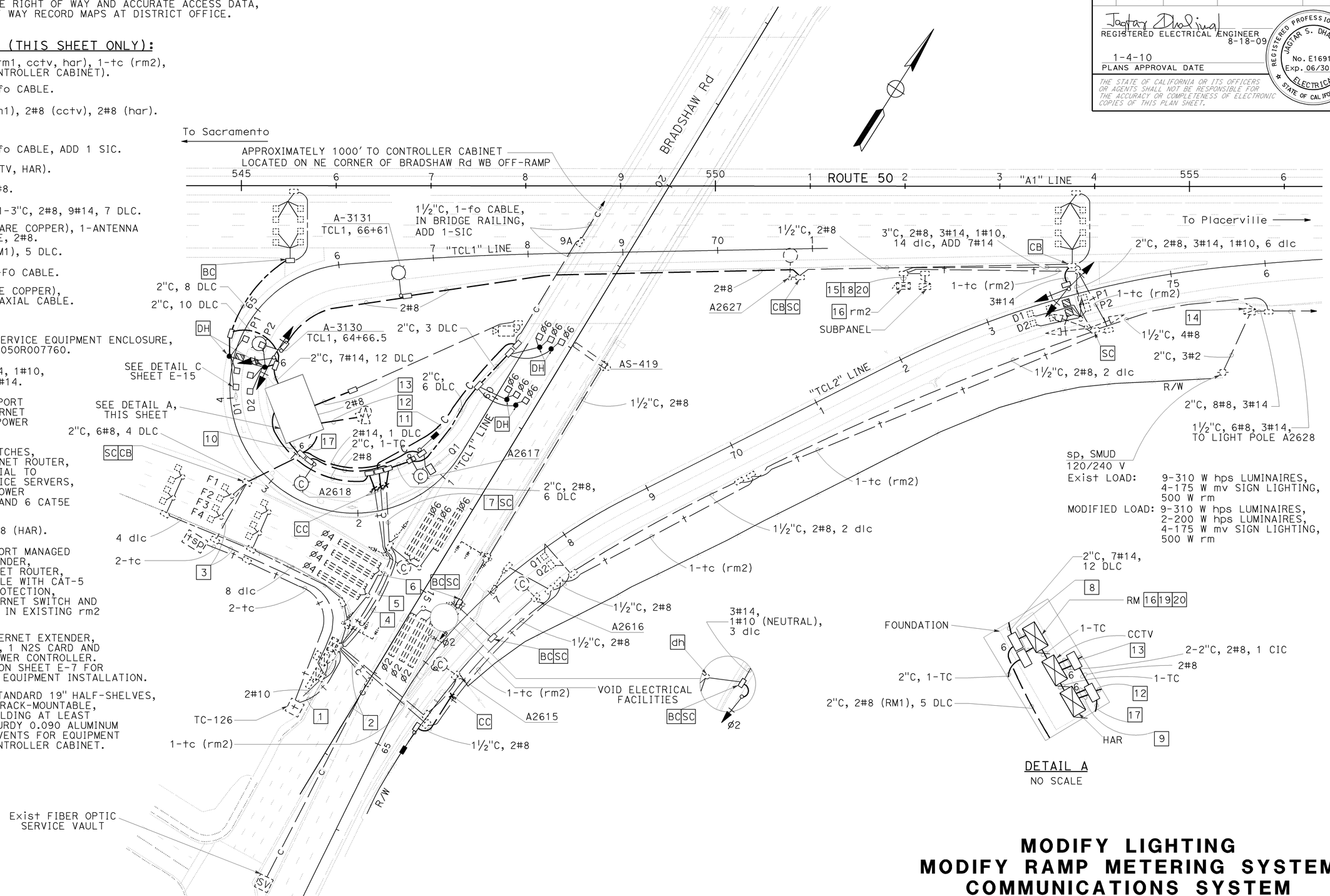

DETAIL A
NO SCALE

MODIFY LIGHTING
MODIFY RAMP METERING SYSTEM
COMMUNICATIONS SYSTEM
(BRADSHAW Rd)

SCALE: 1" = 50'

THIS PLAN IS ACCURATE FOR ELECTRICAL WORK ONLY.

E-6

STATE OF CALIFORNIA - DEPARTMENT OF TRANSPORTATION
OFFICE OF ELECTRICAL DESIGN
SACRAMENTO

FUNCTIONAL SUPERVISOR: NELSON LEE
CALCULATED-DESIGNED BY: JAMIE KOJAK
CHECKED BY: JAGTAR DHALIWAL
REVISED BY / DATE REVISED

LAST REVISION 08-14-09 | DATE PLOTTED => 11-JAN-2010 | TIME PLOTTED => 11:12

Dist	COUNTY	ROUTE	POST MILES TOTAL PROJECT	SHEET No.	TOTAL SHEETS
03	Sac	50	R0.6/17.4	131	233

REGISTERED ELECTRICAL ENGINEER 8-18-09

1-4-10
PLANS APPROVAL DATE

REGISTERED PROFESSIONAL ENGINEER JAGTAR S. DHALIWAL No. E16915 Exp. 06/30/11 ELECTRICAL STATE OF CALIFORNIA

THE STATE OF CALIFORNIA OR ITS OFFICERS OR AGENTS SHALL NOT BE RESPONSIBLE FOR THE ACCURACY OR COMPLETENESS OF ELECTRONIC COPIES OF THIS PLAN SHEET.

NOTE:

FOR COMPLETE RIGHT OF WAY AND ACCURATE ACCESS DATA, SEE RIGHT OF WAY RECORD MAPS AT DISTRICT OFFICE.

PROJECT NOTES (THIS SHEET ONLY):

1. TYPE III-AF METERED SERVICE EQUIPMENT ENCLOSURE, CTID No. 03240500015760.
2. RR Exist RAMP METERING CONTROLLER ASSEMBLY. SEE PROJECT NOTE #2 ON SHEET E-8 FOR NEW LOCATION.
3. RR Exist SUBPANEL WITH 1 kVA STEP-DOWN TRANSFORMER 240-120 V. SEE PROJECT NOTE #3 ON SHEET E-8 FOR NEW LOCATION.
4. RR ELECTROLIER AND RC FOUNDATION. SEE SHEET E-8 FOR NEW LOCATION.
5. RR "METER ON" SIGN AND TYPE 1-B POLE, SEE SHEET E-8 FOR NEW LOCATION.
6. RR SIGNAL HEADS AND TYPE 1-B POLE, SEE SHEET E-8 FOR NEW LOCATION.
7. RC ELECTROLIER.
8. RR Exist RAMP METERING CONTROLLER ASSEMBLY AND ANTENNA. SEE PROJECT NOTE #11 ON SHEET E-8 FOR NEW LOCATION.
9. THE CONTRACTOR SHALL INSTALL 12" DIN RAIL AS SHOWN IN DETAIL "B" THIS SHEET. THE DIN RAIL SHALL BE INSTALLED WITHIN INCHES ABOVE THE TBO ON THE SERVICE PANEL IN THE CONTROLLER CABINET.

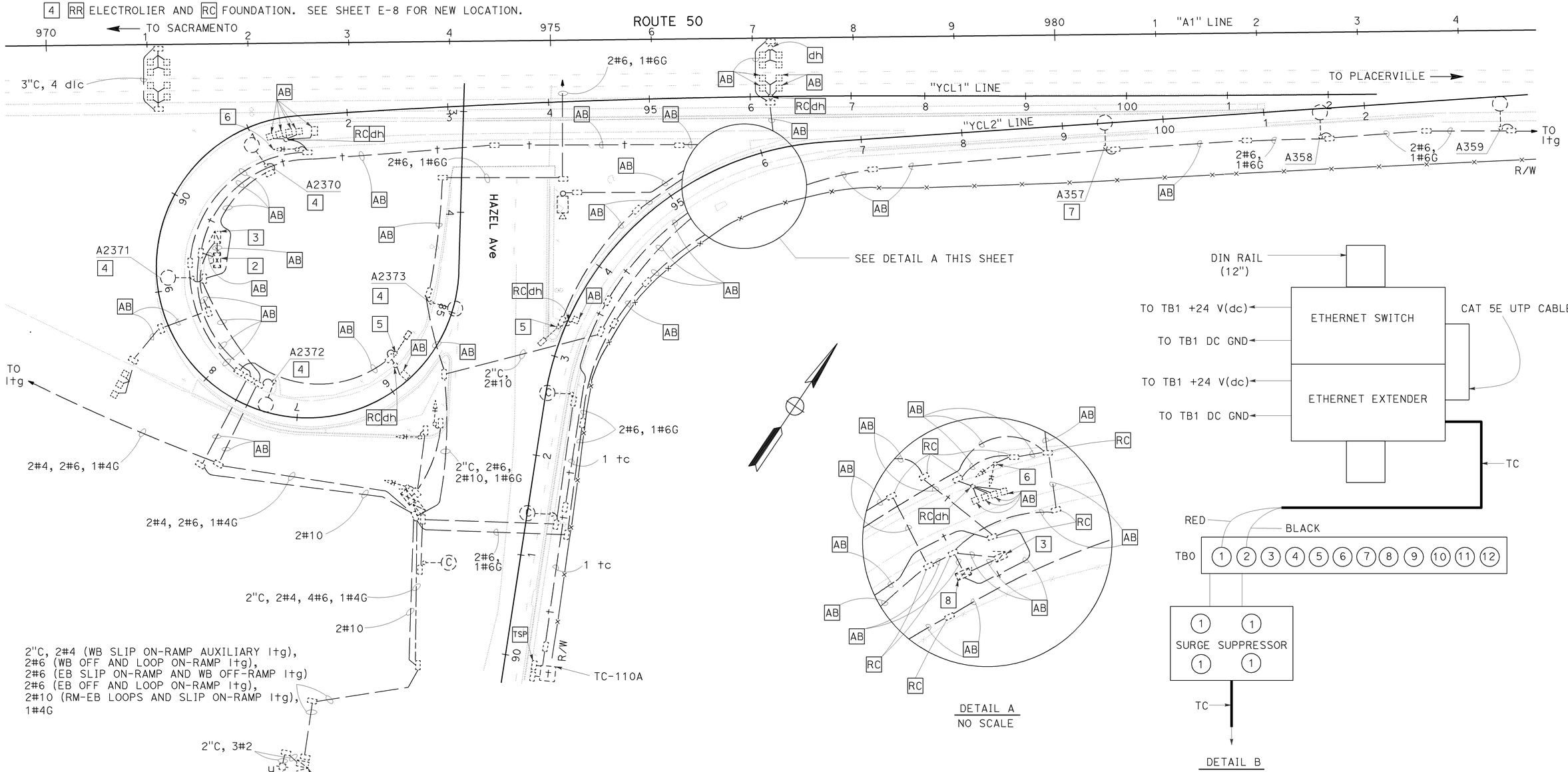

THIS PLAN IS ACCURATE FOR ELECTRICAL WORK ONLY.

MODIFY RAMP METERING SYSTEM
MODIFY LIGHTING

SCALE: 1" = 50'

E-7

STATE OF CALIFORNIA - DEPARTMENT OF TRANSPORTATION
OFFICE OF ELECTRICAL DESIGN
SACRAMENTO

FUNCTIONAL SUPERVISOR: NELSON LEE
CALCULATED-DESIGNED BY: JAGTAR DHALIWAL
CHECKED BY: BRIAN CHOW
REVISED BY / DATE REVISED

LAST REVISION 08-14-09 | DATE PLOTTED => 11-JAN-2010 | TIME PLOTTED => 09:23

NOTE: FOR COMPLETE RIGHT OF WAY AND ACCURATE ACCESS DATA, SEE RIGHT OF WAY RECORD MAPS AT DISTRICT OFFICE.

Dist	COUNTY	ROUTE	POST MILES TOTAL PROJECT	SHEET No.	TOTAL SHEETS
03	Sac	50	R0.6/17.4	132	233

REGISTERED ELECTRICAL ENGINEER 8-18-09

1-4-10
PLANS APPROVAL DATE

REGISTERED PROFESSIONAL ENGINEER JAGTAR S. DHALIWAL No. E16915 Exp. 06/30/11 ELECTRICAL STATE OF CALIFORNIA

THE STATE OF CALIFORNIA OR ITS OFFICERS OR AGENTS SHALL NOT BE RESPONSIBLE FOR THE ACCURACY OR COMPLETENESS OF ELECTRONIC COPIES OF THIS PLAN SHEET.

PROJECT NOTES (THIS SHEET ONLY):

1. TYPE III-AF METERED SERVICE EQUIPMENT ENCLOSURE, CTID No. 03240500015760. FOR SERVICE WIRING DIAGRAM, SEE THIS SHEET. FOR LIGHTING CIRCUIT DIAGRAM, SEE SHEET E-14.
2. INSTALL RAMP METERING CONTROLLER ASSEMBLY. INSTALL ITU IN CONTROLLER CABINET.
3. RL SUBPANEL WITH 1 kVA STEP-DOWN TRANSFORMER 240-120 V. INSTALL 10 A FUSE ON SECONDARY SIDE OF TRANSFORMER. RC 20 A CB AND 15 A CB. FOR WIRING DIAGRAM, SEE THIS SHEET.
4. 2"C, 4#14, 2 DLC.
5. 3"C, 4#14, 15 DLC.
6. 2-3"C, 2#10, 6#14, 17 DLC.
7. RC PULL BOX AND INSTALL NEW PULL BOX AS SHOWN.
8. 3"C, 4#14, 1 CIC, 13 DLC.
9. 2-3"C, 2#10, 6#14, 1 CIC, 15 DLC.
10. 2"C, 2#14, 1 CIC, 1 DLC.
11. INSTALL RAMP METERING CONTROLLER ASSEMBLY AND ANTENNA.
12. 1-ORANGE, 1¼"C, MT.
13. INSTALL 1 ETHERNET EXTENDER, 1 POWER STRIP, 1 8-PORT ETHERNET SWITCH, 1 FAST ETHERNET ROUTER, 1 N2S CARD, CAT5E UTP CABLE WITH CAT-5 DATA SURGE PROTECTION AND 1 RS-232 SERIAL TO ETHERNET DEVICE SERVER INSIDE THE CONTROLLER CABINET. SEE DETAIL B ON SHEET E-7 FOR COMMUNICATION EQUIPMENT INSTALLATION.
14. INSTALL 1 ETHERNET EXTENDER, 1 POWER STRIP, 1 N2S CARD AND 1 RS-232 SERIAL TO ETHERNET DEVICE SERVER INSIDE THE CONTROLLER CABINET. SEE DETAIL B ON SHEET E-7 FOR COMMUNICATION EQUIPMENT INSTALLATION.
15. INSTALL EIA STANDARD 19", SINGLE-SIDED, RACK MOUNTABLE, CAPABLE OF HOLDING AT LEAST 50 POUNDS, STURDY 0.090 ALUMINUM WITH AIRFLOW VENTS HALF-SHELVES FOR EQUIPMENT INSTALLATION.

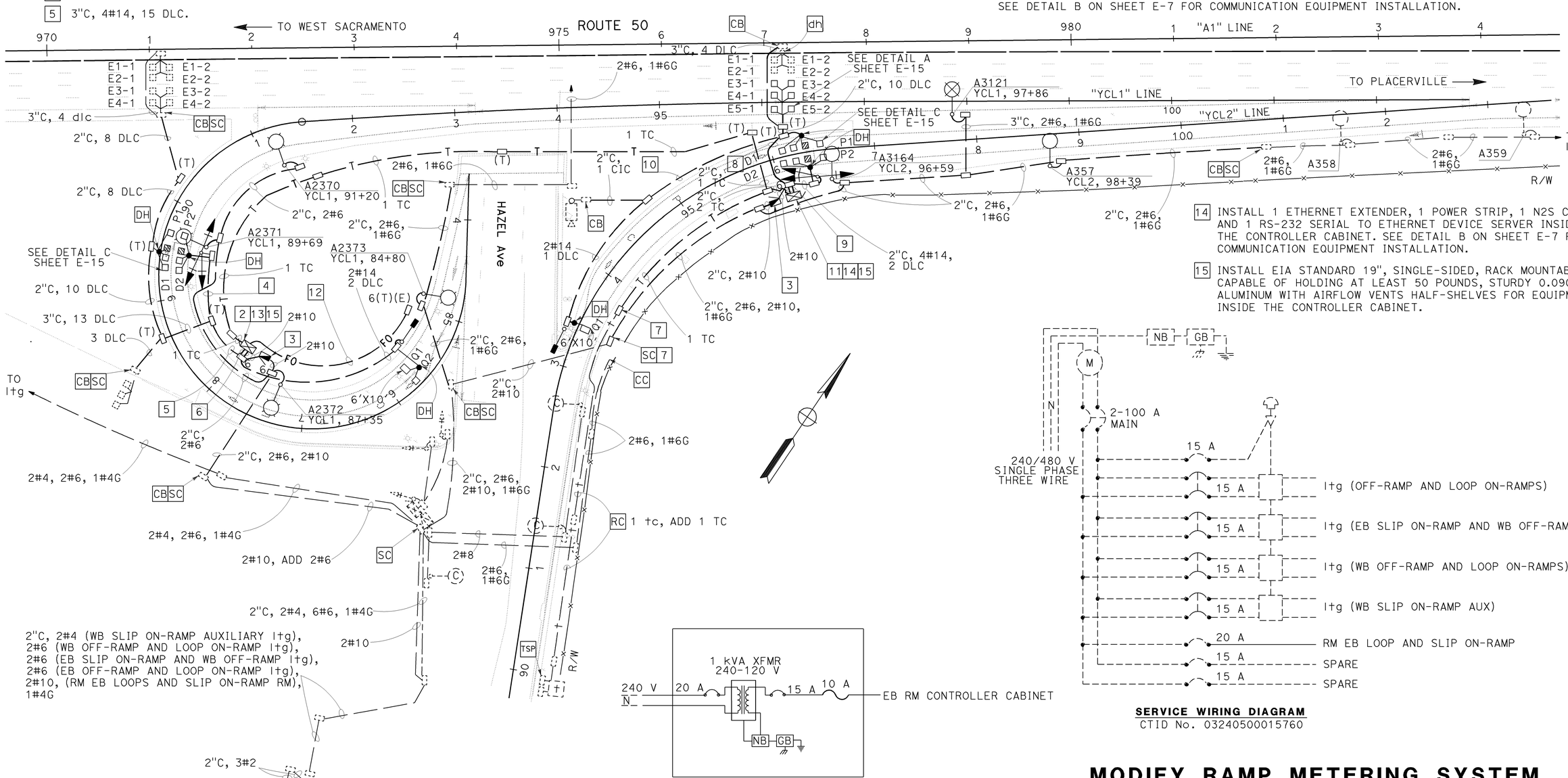

MODIFIED SUBPANEL WIRING DIAGRAM

SERVICE WIRING DIAGRAM
CTID No. 03240500015760

THIS PLAN IS ACCURATE FOR ELECTRICAL WORK ONLY.

MODIFY RAMP METERING SYSTEM
MODIFY LIGHTING
FIBER OPTIC SYSTEM
COMMUNICATIONS SYSTEM

SCALE: 1" = 50'

E-8

STATE OF CALIFORNIA - DEPARTMENT OF TRANSPORTATION
Caltrans® OFFICE OF ELECTRICAL DESIGN
SACRAMENTO

FUNCTIONAL SUPERVISOR: NELSON LEE
CALCULATED-DESIGNED BY: JAGTAR DHALIWAL
CHECKED BY: BRIAN CHOW
REVISED BY / DATE REVISED

LAST REVISION 08-14-09 | DATE PLOTTED => 11-JAN-2010 | TIME PLOTTED => 11:25

Dist	COUNTY	ROUTE	POST MILES TOTAL PROJECT	SHEET No.	TOTAL SHEETS
03	Sac	50	R0.6/17.4	133	233

REGISTERED ELECTRICAL ENGINEER 8-18-09

1-4-10
PLANS APPROVAL DATE

REGISTERED PROFESSIONAL ENGINEER JAGTAR S. DHALIWAL No. E16915 Exp. 06/30/11 ELECTRICAL STATE OF CALIFORNIA

THE STATE OF CALIFORNIA OR ITS OFFICERS OR AGENTS SHALL NOT BE RESPONSIBLE FOR THE ACCURACY OR COMPLETENESS OF ELECTRONIC COPIES OF THIS PLAN SHEET.

NOTE:

FOR COMPLETE RIGHT OF WAY AND ACCURATE ACCESS DATA, SEE RIGHT OF WAY RECORD MAPS AT DISTRICT OFFICE.

PROJECT NOTES (THIS SHEET ONLY):

1. RC ELECTROLIER.
2. TYPE III-AF SERVICE EQUIPMENT ENCLOSURE, CTID No. 03240500017011.
3. TYPE III-AF SERVICE EQUIPMENT ENCLOSURE, CTID No. 03240500017010.
4. 2"C, 2#4, 2#6, 2#10.

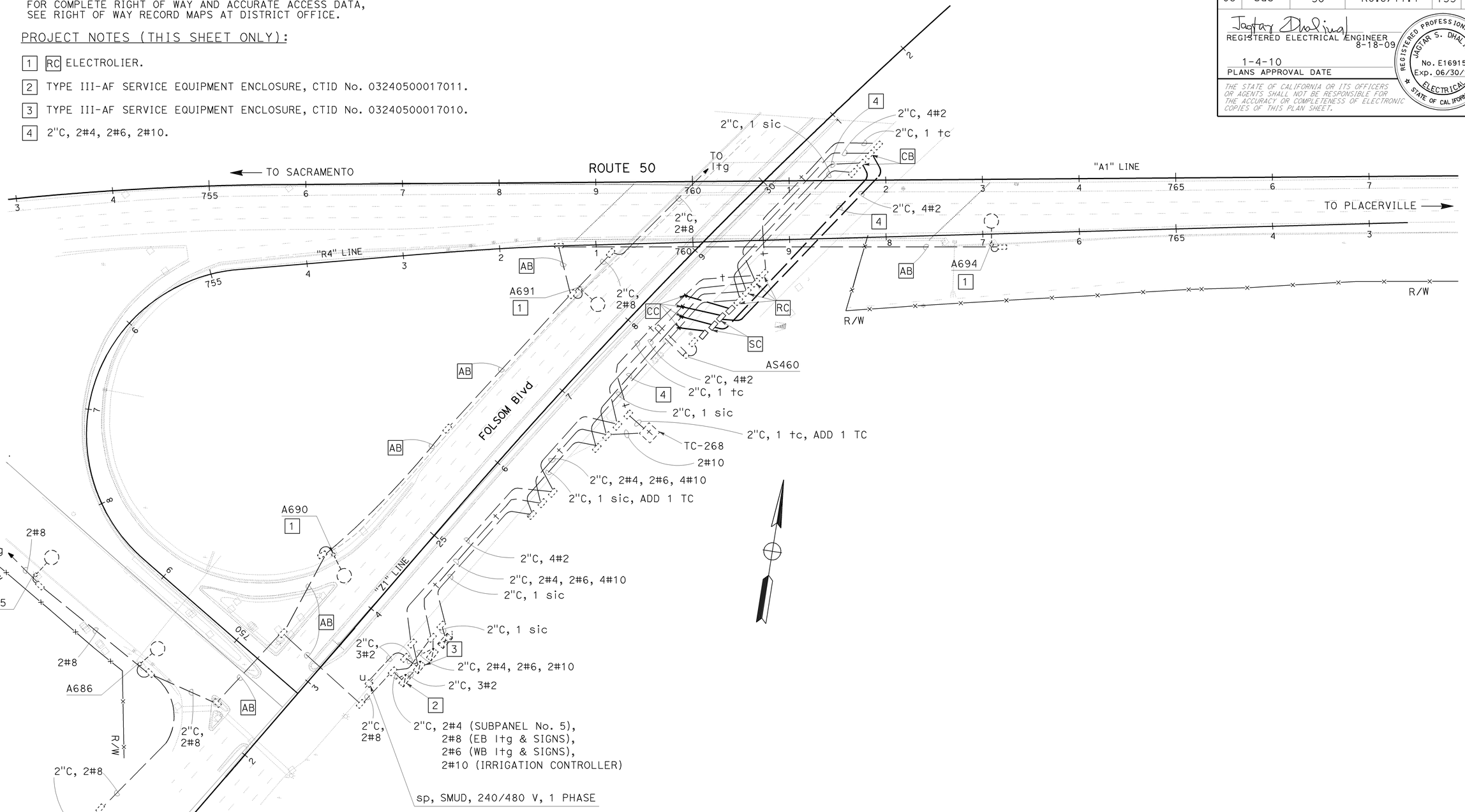

THIS PLAN IS ACCURATE FOR ELECTRICAL WORK ONLY.

MODIFY LIGHTING

SCALE: 1" = 50'

E-9

STATE OF CALIFORNIA - DEPARTMENT OF TRANSPORTATION
Caltrans
OFFICE OF ELECTRICAL DESIGN
SACRAMENTO

FUNCTIONAL SUPERVISOR: NELSON LEE
CALCULATED-DESIGNED BY: BRIAN CHOW
CHECKED BY: JAGTAR DHALIWAL
REVISED BY
DATE REVISED

LAST REVISION 08-14-09 | DATE PLOTTED => 05-JAN-2010 | TIME PLOTTED => 13:01

Dist	COUNTY	ROUTE	POST MILES TOTAL PROJECT	SHEET No.	TOTAL SHEETS
03	Sac	50	0.6/17.4	134	233

REGISTERED ELECTRICAL ENGINEER 8-18-09

1-4-10
PLANS APPROVAL DATE

REGISTERED PROFESSIONAL ENGINEER JAGTAR S. DHALIWAL No. E16915 Exp. 06/30/11 ELECTRICAL STATE OF CALIFORNIA

THE STATE OF CALIFORNIA OR ITS OFFICERS OR AGENTS SHALL NOT BE RESPONSIBLE FOR THE ACCURACY OR COMPLETENESS OF ELECTRONIC COPIES OF THIS PLAN SHEET.

NOTE:

FOR COMPLETE RIGHT OF WAY AND ACCURATE ACCESS DATA, SEE RIGHT OF WAY RECORD MAPS AT DISTRICT OFFICE.

PROJECT NOTES (THIS SHEET ONLY):

1. INSTALL STATE-FURNISHED 334 CONTROLLER CABINET AND 2070 CONTROLLER WITH 6A MODEM.
2. INSTALL NEMA TYPE 3R ENCLOSURE, SUBPANEL No. 8 (EB RM) WITH 5 kVA STEP-DOWN TRANSFORMER 480-120 V. FOR WIRING DIAGRAM, SEE THIS SHEET.
3. TYPE III-AF SERVICE EQUIPMENT ENCLOSURE, CTID No. 03240500017011. FOR SERVICE WIRING DIAGRAM, SEE THIS SHEET. FOR LIGHTING CIRCUIT DIAGRAM, SEE SHEET E-14.
4. 2"C, 2 dlc, RC 2 dlc, ADD 2 DLC AND SPLICE TO EXISTING LOOP DETECTORS AT ABOUT 300'.
5. 2-3"C, 2#8, 2#12, 4#14, 11 DLC.
6. CHANGE NAMEPLATE TO "480 V WB RAMP METER (SUBPANEL No. 5)".
7. TYPE III-AF SERVICE EQUIPMENT ENCLOSURE, CTID No. 03240500017010.
8. RC 1 mv, RC SC4A, INSTALL 1 ISL, SC3A
9. Exist SIGNAL CONTROLLER CABINET.
10. SEE DETAIL E ON SHEET E-15. FOR QUANTITIES, SEE PAVEMENT DELINEATION AND SIGN PLANS.
11. INSTALL 1 ETHERNET EXTENDER, 1 POWER STRIP, 1 8-PORT ETHERNET SWITCH, 1 FAST ETHERNET ROUTER, CAT-5E UTP CABLE WITH CAT-5 DATA SURGE PROTECTION AND 1 RS-232 SERIAL TO ETHERNET DEVICE SERVER INSIDE CONTROLLER CABINET. SEE DETAIL ON SHEET E-7 FOR COMMUNICATION INSTALLATION.
12. 2"C, 2#4, 2#6, 2#10.
13. INSTALL 1 ETHERNET EXTENDER IN TDC.
14. INSTALL EIA STANDARD 19", SINGLE-SIDED, RACK MOUNTABLE HALF-SHELVES FOR EQUIPMENT INSIDE THE CONTROLLER CABINET.

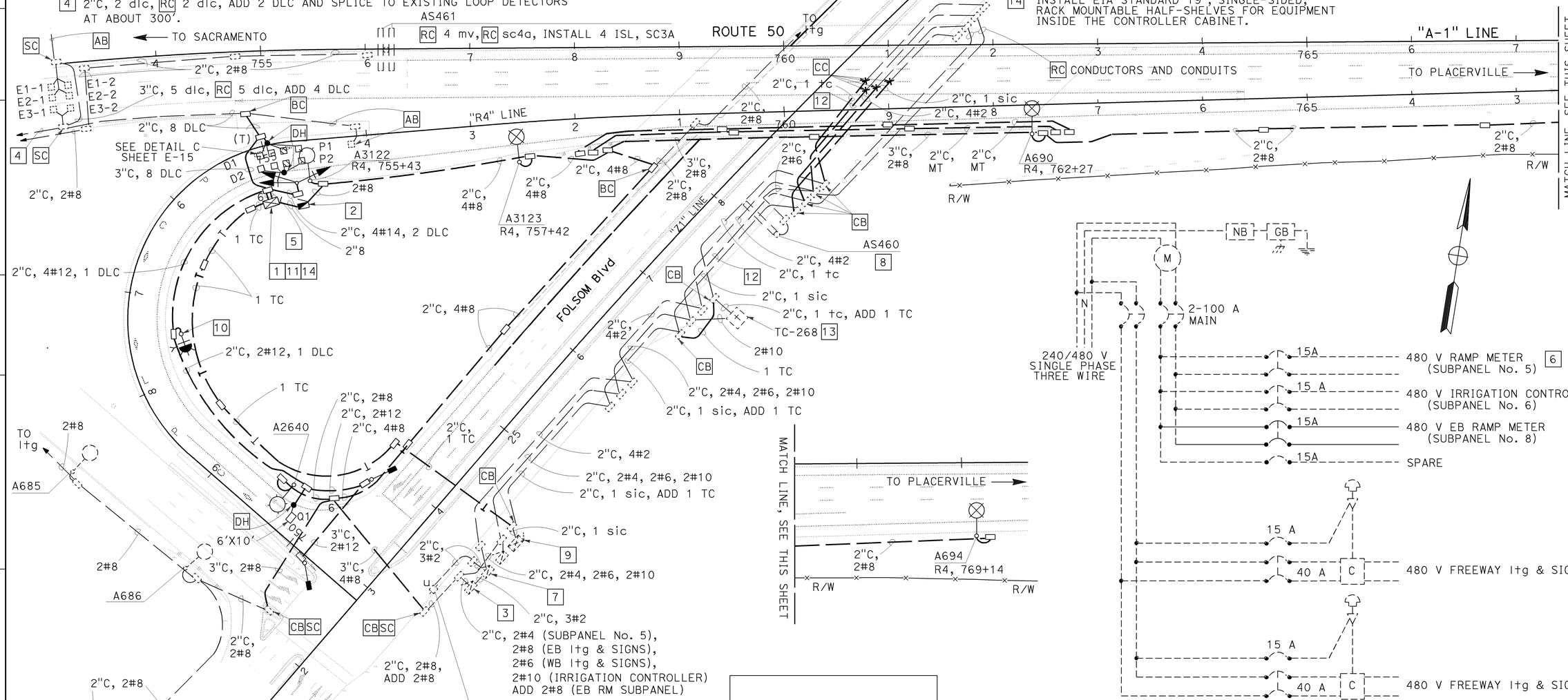

SERVICE WIRING DIAGRAM
CTID No. 03240500017011

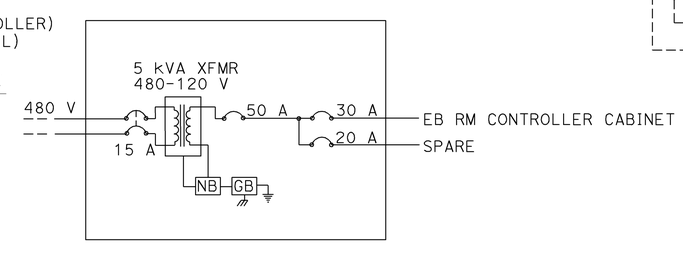

SUBPANEL No. 8 (EB RM) WIRING DIAGRAM

RAMP METERING SYSTEM MODIFY LIGHTING COMMUNICATIONS SYSTEM

SCALE: 1" = 50'

E-10

THIS PLAN IS ACCURATE FOR ELECTRICAL WORK ONLY.

STATE OF CALIFORNIA - DEPARTMENT OF TRANSPORTATION
OFFICE OF ELECTRICAL DESIGN SACRAMENTO

FUNCTIONAL SUPERVISOR: NELSON LEE
CALCULATED-DESIGNED BY: BRIAN CHOW
CHECKED BY: JAGTAR DHALIWAL
REVISED BY / DATE REVISED

LAST REVISION 08-14-09 | DATE PLOTTED => 11-JAN-2010 | TIME PLOTTED => 11:25

Dist	COUNTY	ROUTE	POST MILES TOTAL PROJECT	SHEET No.	TOTAL SHEETS
03	Sac	50	R0.6/17.4	135	233

REGISTERED ELECTRICAL ENGINEER 8-18-09

1-4-10
PLANS APPROVAL DATE

REGISTERED PROFESSIONAL ENGINEER JAGTAR S. DHALIWAL No. E16915 Exp. 06/30/11 ELECTRICAL STATE OF CALIFORNIA

THE STATE OF CALIFORNIA OR ITS OFFICERS OR AGENTS SHALL NOT BE RESPONSIBLE FOR THE ACCURACY OR COMPLETENESS OF ELECTRONIC COPIES OF THIS PLAN SHEET.

NOTE:

FOR COMPLETE RIGHT OF WAY AND ACCURATE ACCESS DATA, SEE RIGHT OF WAY RECORD MAPS AT DISTRICT OFFICE.

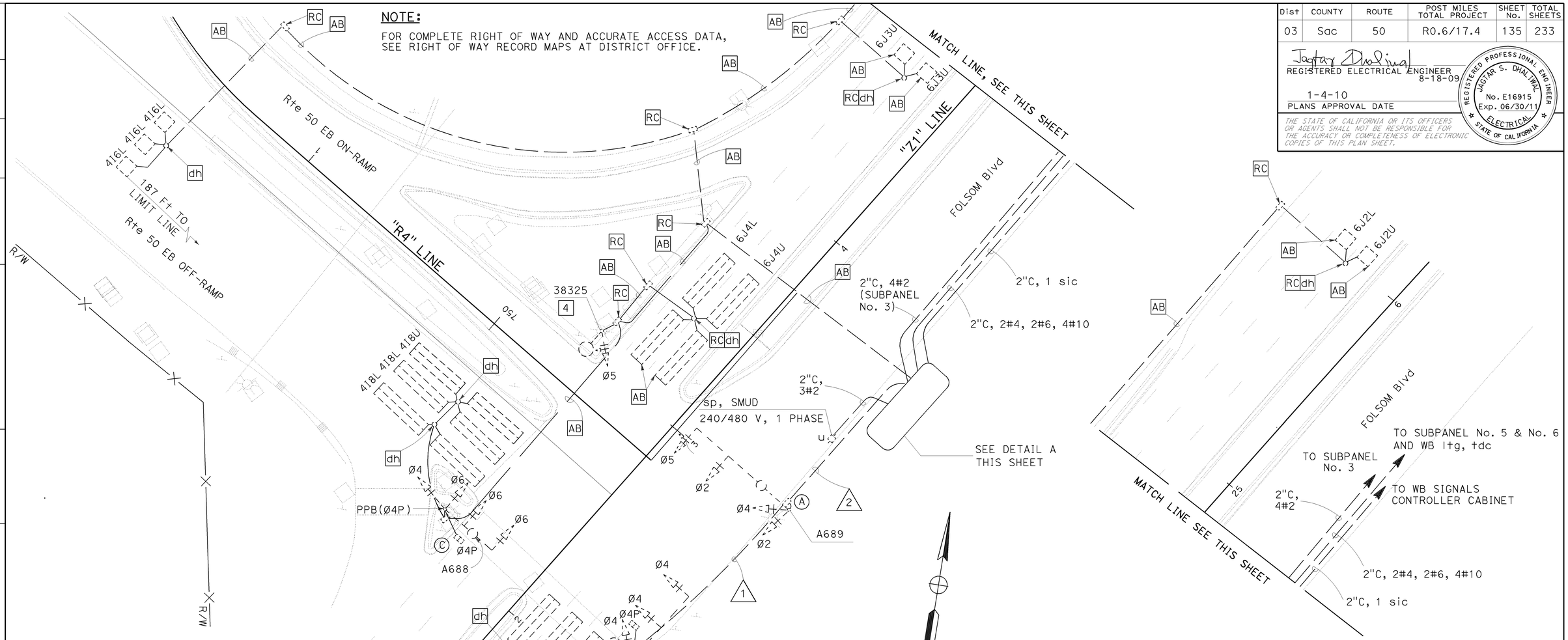

Exist PHASE DIAGRAM
MODEL 170 CONTROLLER ASSEMBLY

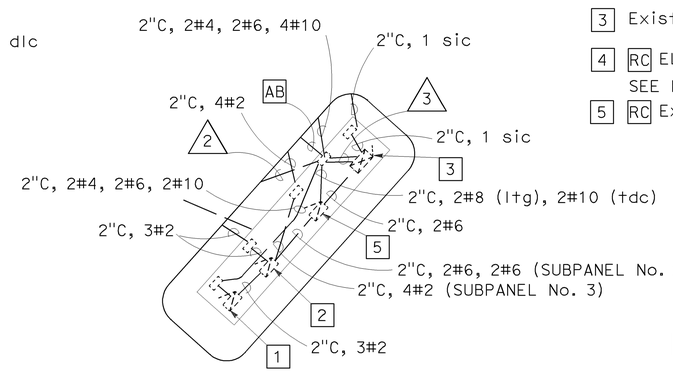

DETAIL A
NO SCALE

PROJECT NOTES (THIS SHEET ONLY):

1. TYPE III-AF METERED SERVICE EQUIPMENT ENCLOSURE, CTID No. 03240500017011.
2. TYPE III-AF METERED SERVICE EQUIPMENT ENCLOSURE, CTID No. 03240500017010.
3. Exist CONTROLLER CABINET.
4. RC ELECTROLIER AND FOUNDATION. RR SIGNAL HEAD. SEE POLE D ON SHEET E-12 FOR NEW LOCATION OF SIGNAL HEAD.
5. RC Exist SUBPANEL No. 2.

THIS PLAN IS ACCURATE FOR ELECTRICAL WORK ONLY.

MODIFY SIGNAL AND LIGHTING
(FOLSOM Blvd/Rte 50 EB OFF-RAMP)

SCALE: 1" = 20'

E-11

STATE OF CALIFORNIA - DEPARTMENT OF TRANSPORTATION
OFFICE OF ELECTRICAL DESIGN
SACRAMENTO

FUNCTIONAL SUPERVISOR: NELSON LEE
CALCULATED-DESIGNED BY: JAGTAR DHALIWAL
CHECKED BY: BRIAN CHOW
REVISED BY
DATE REVISED

LAST REVISION 08-15-09 | DATE PLOTTED => 11-JAN-2010 | TIME PLOTTED => 09:23

Dist	COUNTY	ROUTE	POST MILES TOTAL PROJECT	SHEET No.	TOTAL SHEETS
03	Sac	50	R0.6/17.4	136	233

REGISTERED ELECTRICAL ENGINEER 8-18-09

1-4-10
PLANS APPROVAL DATE

REGISTERED PROFESSIONAL ENGINEER JAGTAR S. DHALIWAL No. E16915 Exp. 06/30/11 ELECTRICAL STATE OF CALIFORNIA

THE STATE OF CALIFORNIA OR ITS OFFICERS OR AGENTS SHALL NOT BE RESPONSIBLE FOR THE ACCURACY OR COMPLETENESS OF ELECTRONIC COPIES OF THIS PLAN SHEET.

NOTE:

FOR COMPLETE RIGHT OF WAY AND ACCURATE ACCESS DATA, SEE RIGHT OF WAY RECORD MAPS AT DISTRICT OFFICE.

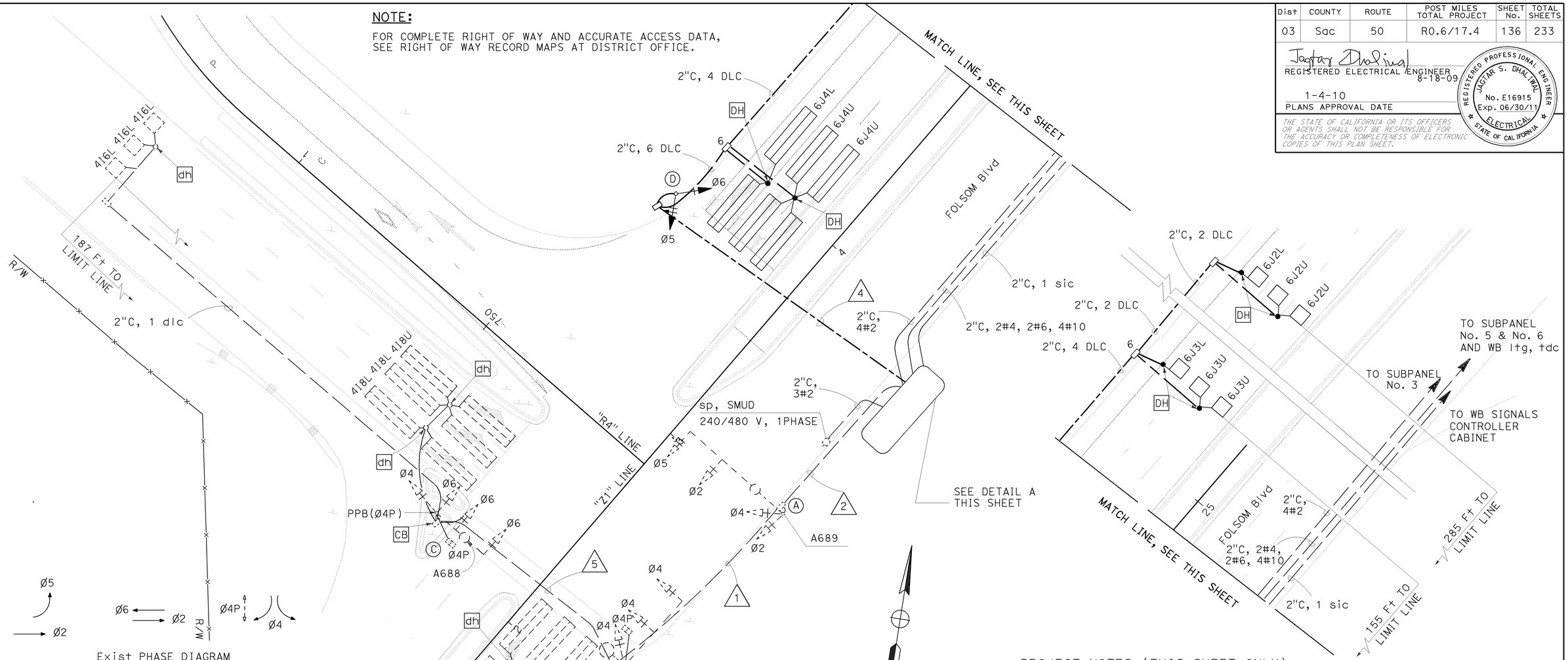

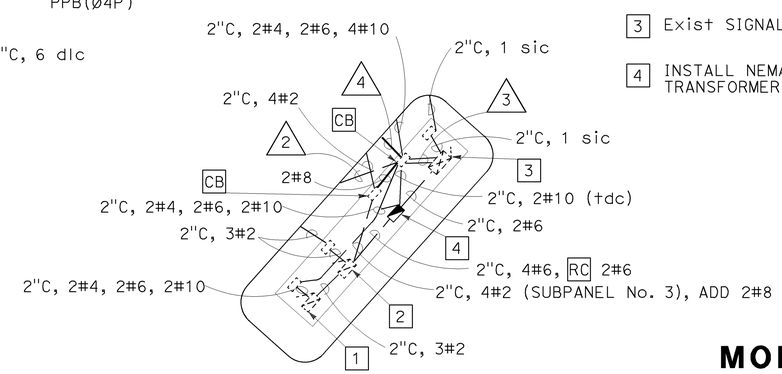

DETAIL A
NO SCALE

PROJECT NOTES (THIS SHEET ONLY):

1. TYPE III-AF METERED SERVICE EQUIPMENT ENCLOSURE, CTID No. 03240500017011.
2. TYPE III-AF METERED SERVICE EQUIPMENT ENCLOSURE, CTID No. 03240500017010. FOR SERVICE WIRING DIAGRAM, SEE SHEET E-13.
3. Exist SIGNAL CONTROLLER CABINET.
4. INSTALL NEMA TYPE 3R ENCLOSURE, SUBPANEL No. 2 WITH A 5 kVA STEP-DOWN TRANSFORMER 480-120 V. FOR WIRING DIAGRAM, SEE SHEET E-13.

THIS PLAN IS ACCURATE FOR ELECTRICAL WORK ONLY.

MODIFY SIGNAL AND LIGHTING

(FOLSOM Blvd/Rte 50 EB OFF-RAMP)

SCALE: 1" = 20'

E-12

REVISED BY	DATE REVISED

CALCULATED-DESIGNED BY: BRIAN CHOW
CHECKED BY: JAGTAR DHALIWAL
FUNCTIONAL SUPERVISOR: NELSON LEE

STATE OF CALIFORNIA - DEPARTMENT OF TRANSPORTATION
Caltrans® OFFICE OF ELECTRICAL DESIGN
SACRAMENTO

LAST REVISION 08-15-09 | DATE PLOTTED => 11-JAN-2010 | TIME PLOTTED => 09:23

Dist	COUNTY	ROUTE	POST MILES TOTAL PROJECT	SHEET No.	TOTAL SHEETS
03	Sac	50	R0.6/17.4	137	233

REGISTERED ELECTRICAL ENGINEER 8-18-09

1-4-10
PLANS APPROVAL DATE

REGISTERED PROFESSIONAL ENGINEER JAGTAR S. DHALIWAL No. E16915 Exp. 06/30/11 ELECTRICAL STATE OF CALIFORNIA

THE STATE OF CALIFORNIA OR ITS OFFICERS OR AGENTS SHALL NOT BE RESPONSIBLE FOR THE ACCURACY OR COMPLETENESS OF ELECTRONIC COPIES OF THIS PLAN SHEET.

CONDUCTOR SCHEDULE

AWG	CIRCUIT	CONDUIT RUN NUMBER AND SIZE				
		1*	2*	3*	4	5
		4"C	4"C	2-4"C	4"C	3"C
No. 14	Ø2	3	3	3		
	Ø4	3	3	3		3
	Ø5		3	6	3	
	Ø6	3***	3***	6	3	3
	Ø4P	2	2	2		2
	PPB (Ø4P)	1	1	1		1
	PPB COMMON	1	1	1		1
	SPARES	3	3	6	3	3
	TOTAL CONDUCTORS	16	19	28	9	13
No. 8	SIGNAL COMMON	1	1	2	1	1
	LIGHTING (240 V)	2	2		2	2
	TOTAL	3	3	2	3	3
DLC	Ø2	5	5	5		
	Ø4	3***	3***	3**		3
	Ø5	1	1	1		
	Ø6			6**	6	
	TOTAL	9	9	15	6	3

* Exist CONDUIT AND CONDUCTORS
** RC Exist dlc, INSTALL NEW DLC AS NOTED.
*** INSTALL NEW CONDUCTORS AS NOTED.

PROPOSED POLE AND EQUIPMENT SCHEDULE

Std	STANDARDS			VEH SIG MTG		PED SIGNAL MTG	PPB		HPS LUMINAIRE (WATTS)
	TYPE	SMA (feet)	LMA (feet)	MAST ARM	POLE		Ø	ARROW	
Ⓐ	29-5-100	50	15	MAS MAS	SV-2-TA				200
Ⓑ	24-4-100	35	12	MAS MAS	SV-1-T	SP-1-T	4P	→	200
Ⓒ	19-3-100	25	12	MAS MAS	SV-2-TA	SP-1-T	4P	←	200
**** Ⓓ	1-B				TV-2-T				

**** NEW STANDARD

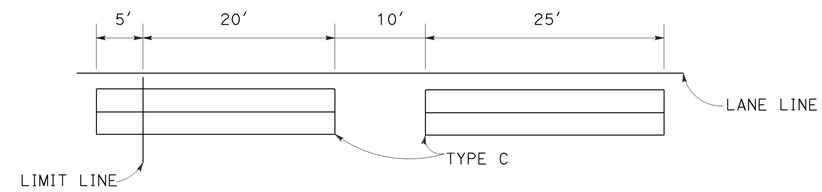

TYPICAL LOOP DETAIL

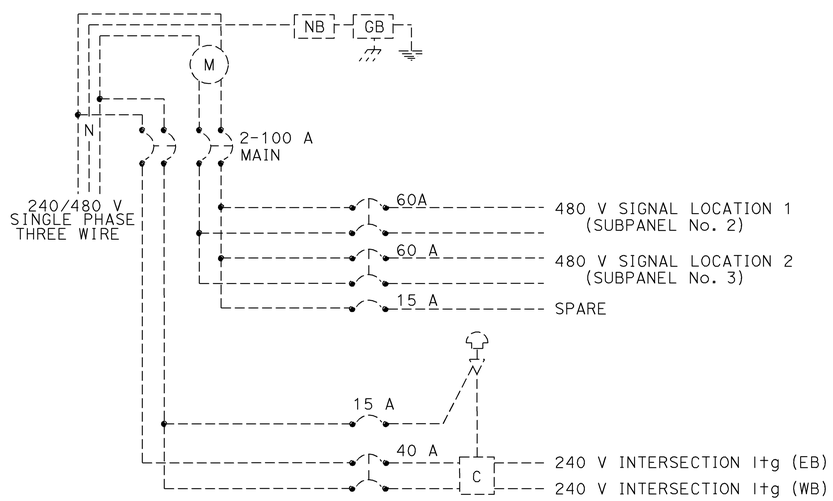

SERVICE WIRING DIAGRAM
CTID No. 03240500017010

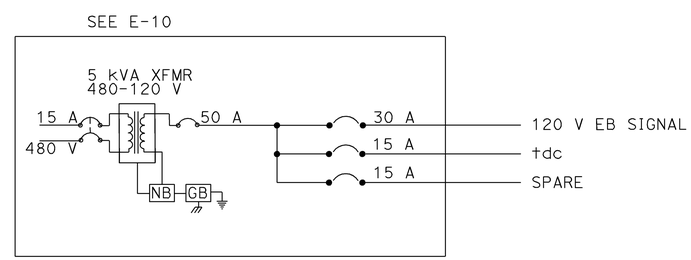

SUBPANEL No. 2 WIRING DIAGRAM

THIS PLAN IS ACCURATE FOR ELECTRICAL WORK ONLY.

MODIFY SIGNAL AND LIGHTING

(CONDUCTOR, POLE AND EQUIPMENT SCHEDULES)
(FOLSOM Blvd/Rte 50 EB OFF-RAMP)
NO SCALE

E-13

STATE OF CALIFORNIA - DEPARTMENT OF TRANSPORTATION
Caltrans OFFICE OF ELECTRICAL DESIGN SACRAMENTO

FUNCTIONAL SUPERVISOR: NELSON LEE
CALCULATED-DESIGNED BY: BRIAN CHOW
CHECKED BY: JAGTAR DHALIWAL
REVISED BY / DATE REVISED

LAST REVISION 08-15-09 | DATE PLOTTED => 11-JAN-2010 | TIME PLOTTED => 11:12

Dist	COUNTY	ROUTE	POST MILES TOTAL PROJECT	SHEET No.	TOTAL SHEETS
03	Sac	50	R0.6/17.4	138	233

REGISTERED ELECTRICAL ENGINEER 8-18-09

1-4-10
PLANS APPROVAL DATE

REGISTERED PROFESSIONAL ENGINEER JAGTAR S. DHALIWAL No. E16915 Exp. 06/30/11 ELECTRICAL STATE OF CALIFORNIA

THE STATE OF CALIFORNIA OR ITS OFFICERS OR AGENTS SHALL NOT BE RESPONSIBLE FOR THE ACCURACY OR COMPLETENESS OF ELECTRONIC COPIES OF THIS PLAN SHEET.

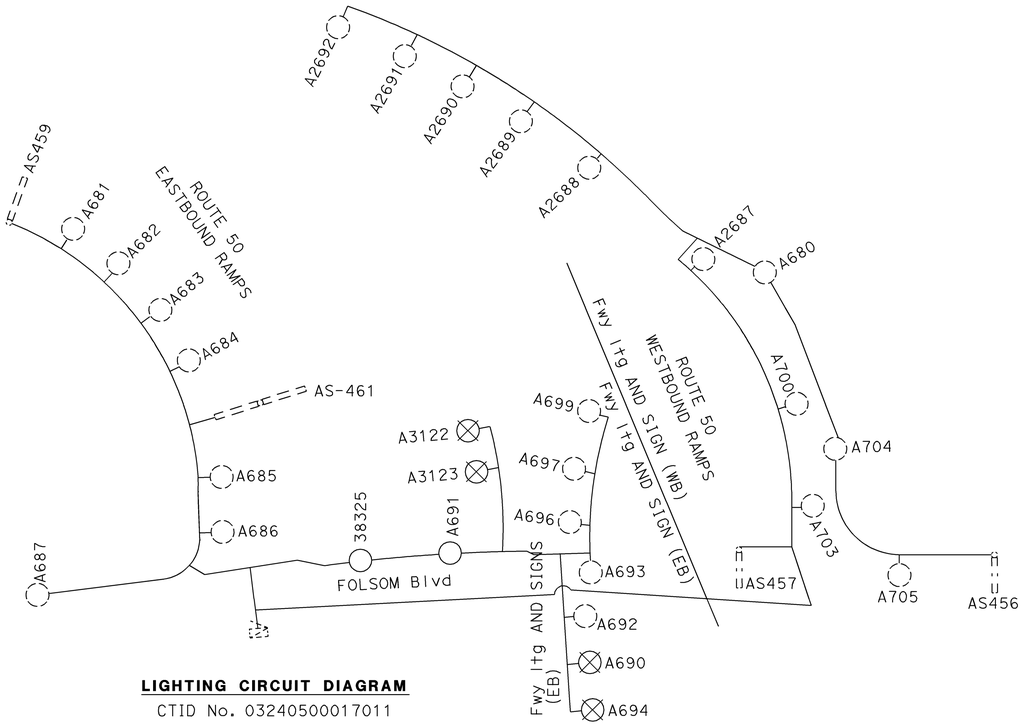

LIGHTING CIRCUIT DIAGRAM
CTID No. 03240500017011

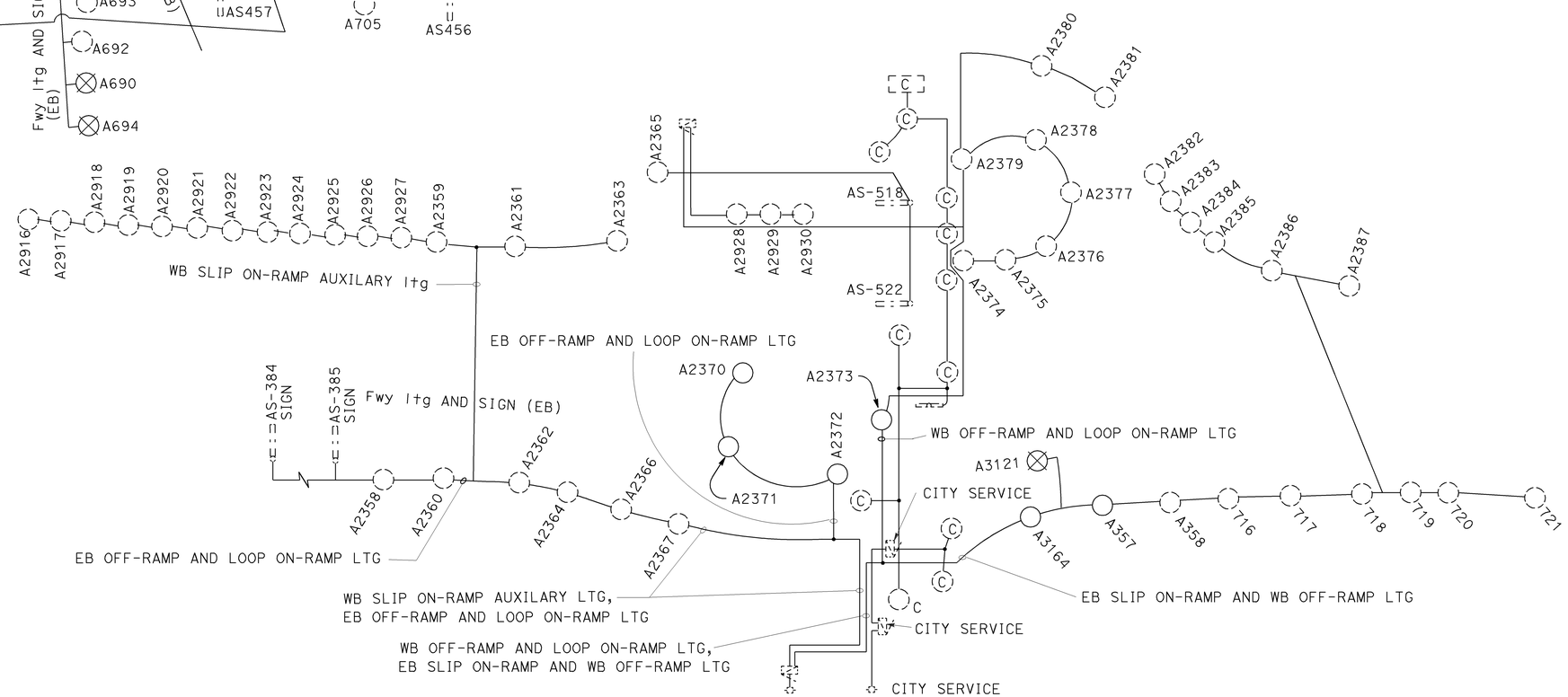

LIGHTING CIRCUIT DIAGRAM
CTID No. 03240500015760

ELECTRICAL DETAILS

NO SCALE

THIS PLAN IS ACCURATE FOR ELECTRICAL WORK ONLY.

E-14

REVISED BY	DATE REVISED

CALCULATED-DESIGNED BY: BRIAN CHOW
CHECKED BY: JAGTAR DHALIWAL
FUNCTIONAL SUPERVISOR: NELSON LEE

STATE OF CALIFORNIA - DEPARTMENT OF TRANSPORTATION
Caltrans OFFICE OF ELECTRICAL DESIGN SACRAMENTO

LAST REVISION 08-14-09 | DATE PLOTTED => 11-JAN-2010 | TIME PLOTTED => 11:12

Dist	COUNTY	ROUTE	POST MILES TOTAL PROJECT	SHEET No.	TOTAL SHEETS
03	Sac	50	R0.6/17.4	139	233

REGISTERED ELECTRICAL ENGINEER 8-18-09

1-4-10
PLANS APPROVAL DATE

REGISTERED PROFESSIONAL ENGINEER JAGTAR S. DHALIWAL No. E16915 Exp. 06/30/11 ELECTRICAL STATE OF CALIFORNIA

THE STATE OF CALIFORNIA OR ITS OFFICERS OR AGENTS SHALL NOT BE RESPONSIBLE FOR THE ACCURACY OR COMPLETENESS OF ELECTRONIC COPIES OF THIS PLAN SHEET.

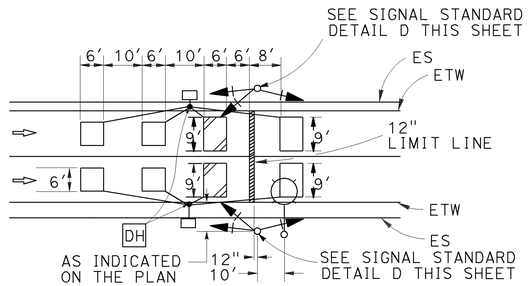

2-LANE RAMP METERING DETECTORS
DETAIL B

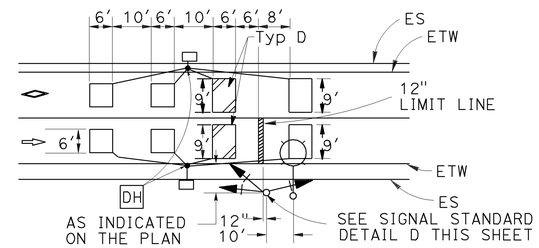

2-LANE RAMP METERING DETECTORS
DETAIL C

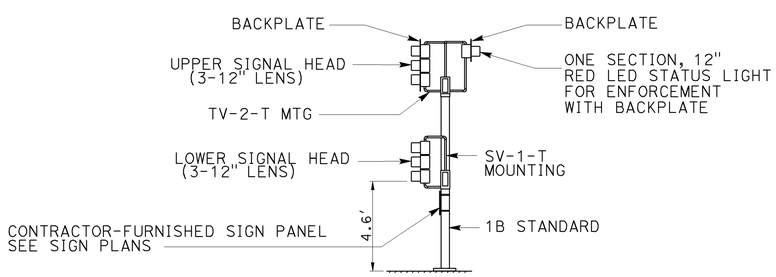

SIGNAL STANDARD
DETAIL D

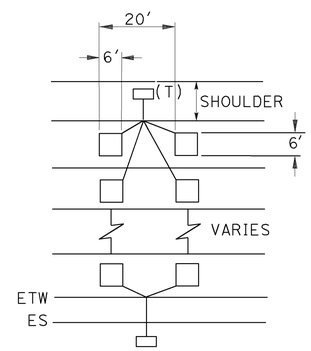

MAINLINE DETECTORS
DETAIL A

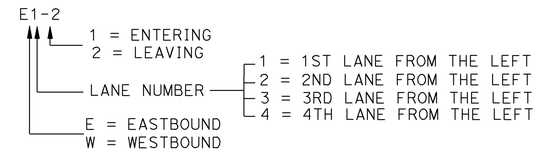

FREEWAY MAINLINE DETECTORS

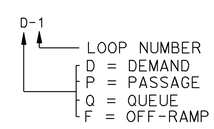

RAMP DETECTORS

DETECTOR IDENTIFICATION

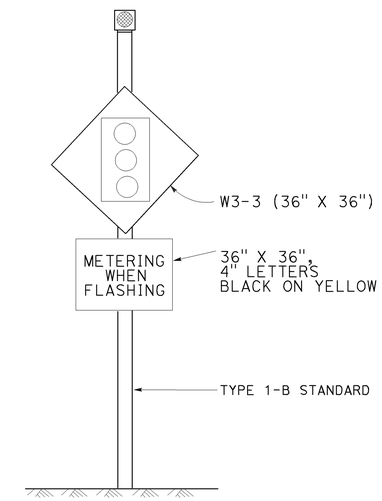

ADVANCE FLASHING BEACON INSTALLATION
DETAIL E

FOR DETAILS NOT SHOWN, SEE STANDARD PLAN ES-7J.

RAMP METERING SYSTEM (DETAILS)

NO SCALE

E-15

THIS PLAN IS ACCURATE FOR ELECTRICAL WORK ONLY.

STATE OF CALIFORNIA - DEPARTMENT OF TRANSPORTATION
Caltrans® OFFICE OF ELECTRICAL DESIGN SACRAMENTO

FUNCTIONAL SUPERVISOR: NELSON LEE
CALCULATED-DESIGNED BY: JAMIE KOJAK
CHECKED BY: JAGTAR DHALIWAL
REVISED BY
DATE REVISED

LAST REVISION 08-03-09 | DATE PLOTTED => 11-JAN-2010 | TIME PLOTTED => 11:12

Dist	COUNTY	ROUTE	POST MILES TOTAL PROJECT	SHEET No.	TOTAL SHEETS
03	Sac	50	R0.6/17.4	140	233

REGISTERED ELECTRICAL ENGINEER 8-18-09

1-4-10
PLANS APPROVAL DATE

REGISTERED PROFESSIONAL ENGINEER JAGTAR S. DHALIWAL No. E16915 Exp. 06/30/11 ELECTRICAL STATE OF CALIFORNIA

THE STATE OF CALIFORNIA OR ITS OFFICERS OR AGENTS SHALL NOT BE RESPONSIBLE FOR THE ACCURACY OR COMPLETENESS OF ELECTRONIC COPIES OF THIS PLAN SHEET.

NOTE:

FOR COMPLETE RIGHT OF WAY AND ACCURATE ACCESS DATA, SEE RIGHT OF WAY RECORD MAPS AT DISTRICT OFFICE.

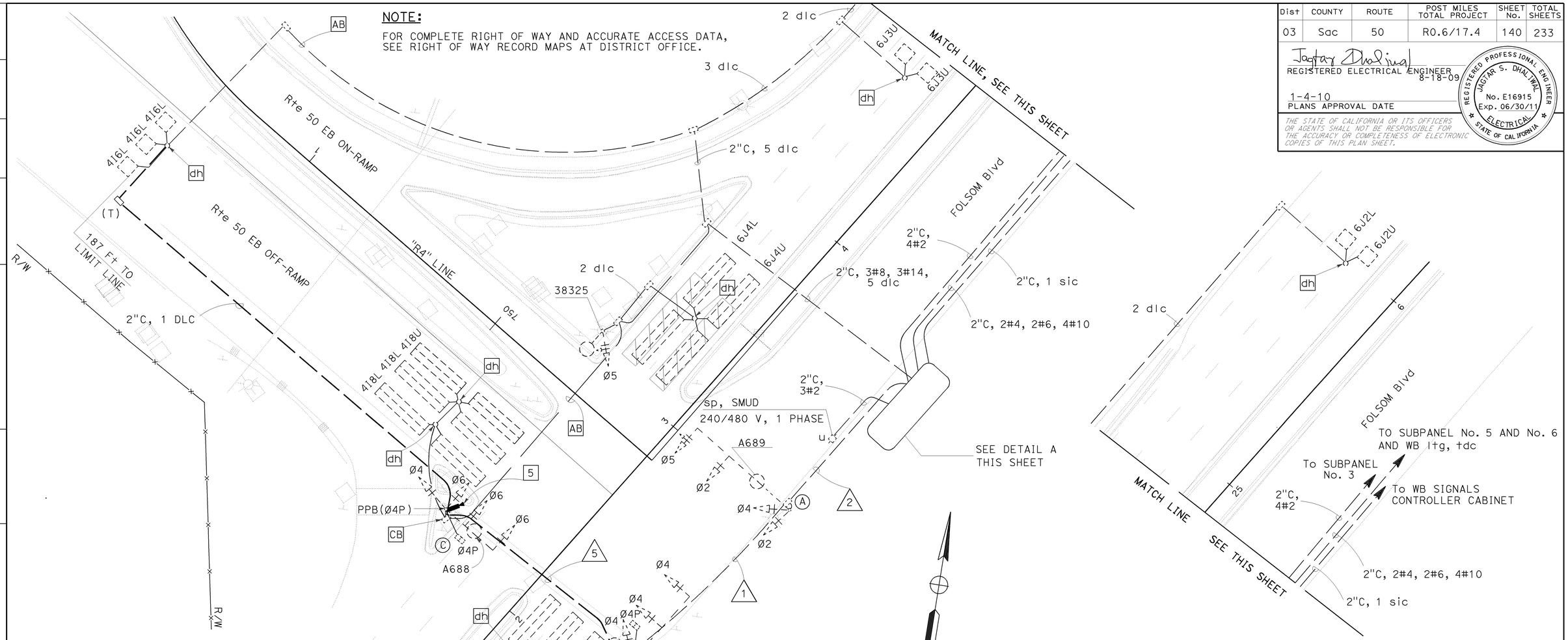

Exist PHASE DIAGRAM
MODEL 170 CONTROLLER ASSEMBLY

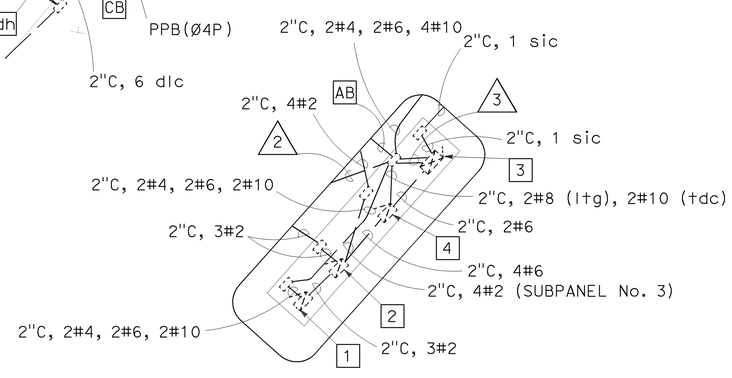

DETAIL A
NO SCALE

THIS PLAN IS ACCURATE FOR ELECTRICAL WORK ONLY.

PROJECT NOTES (THIS SHEET ONLY):

1. TYPE III-AF METERED SERVICE EQUIPMENT ENCLOSURE, CTID No. 03240500017011.
2. TYPE III-AF METERED SERVICE EQUIPMENT ENCLOSURE, CTID No. 03240500017010.
3. Exist CONTROLLER CABINET.
4. Exist SUBPANEL No. 2.
5. INSTALL VIVDS ON POLE C, FOR DETAIL SEE SHEET E-17. THE VIVDS ANGLE SHALL BE DETERMINED BY THE CONTRACTOR IN THE FIELD.
6. INSTALL 1 VIVDS CABLE IN CONDUIT RUN NUMBER 1, 2, 3, AND 5. SEE SHEET E-13 FOR CONDUCTOR SCHEDULE FOR OTHER CONDUCTORS.

STAGE 1
SIGNAL AND LIGHTING (TEMPORARY)
(FOLSOM Blvd AND Rte 50 EB OFF-RAMP)

SCALE: 1" = 20'

E-16

STATE OF CALIFORNIA - DEPARTMENT OF TRANSPORTATION
OFFICE OF ELECTRICAL DESIGN
SACRAMENTO

FUNCTIONAL SUPERVISOR: NELSON LEE
CALCULATED-DESIGNED BY: JAGTAR DHALIWAL
CHECKED BY: BRIAN CHOW
REVISED BY
DATE REVISED

LAST REVISION DATE PLOTTED => 11-JAN-2010
TIME PLOTTED => 11:12
08-15-09

Dist	COUNTY	ROUTE	POST MILES TOTAL PROJECT	SHEET No.	TOTAL SHEETS
03	Sac	50	R0.6/17.4	141	233

REGISTERED ELECTRICAL ENGINEER 8-18-09

1-4-10
PLANS APPROVAL DATE

REGISTERED PROFESSIONAL ENGINEER JAGTAR S. DHALIWAL No. E16915 Exp. 06/30/11 ELECTRICAL STATE OF CALIFORNIA

THE STATE OF CALIFORNIA OR ITS OFFICERS OR AGENTS SHALL NOT BE RESPONSIBLE FOR THE ACCURACY OR COMPLETENESS OF ELECTRONIC COPIES OF THIS PLAN SHEET.

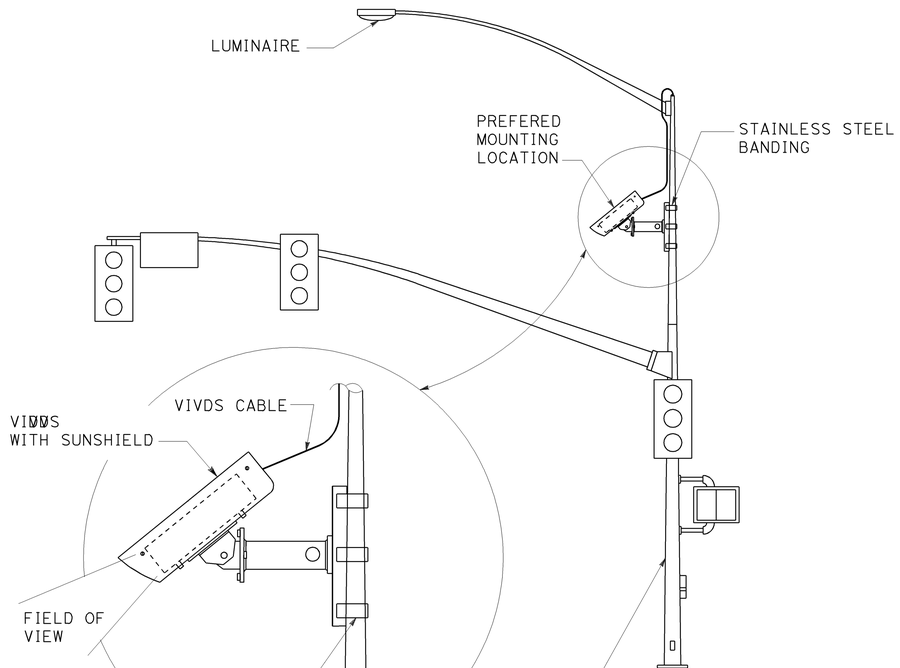

TEMPORARY VIVDS MOUNTING DETAIL

THIS PLAN IS ACCURATE FOR ELECTRICAL WORK ONLY.

STAGE 1
SIGNAL AND LIGHTING (TEMPORARY)
(FOLSOM Blvd AND Rte 50 EB OFF-RAMP)

NO SCALE

E-17

REVISED BY	DATE REVISED

CALCULATED-DESIGNED BY: BRIAN CHOW
CHECKED BY: JAGTAR DHALIWAL
FUNCTIONAL SUPERVISOR: NELSON LEE

STATE OF CALIFORNIA - DEPARTMENT OF TRANSPORTATION
Caltrans OFFICE OF ELECTRICAL DESIGN SACRAMENTO

LAST REVISION 08-14-09 | DATE PLOTTED => 11-JAN-2010 | TIME PLOTTED => 09:24

DIST	COUNTY	ROUTE	POST MILES TOTAL PROJECT	SHEET NO.	TOTAL SHEETS
03	Sac	50	R0.6/17.4	142	233

REGISTERED CIVIL ENGINEER

June 6, 2008
PLANS APPROVAL DATE

REGISTERED PROFESSIONAL ENGINEER
Donald E. Howe
No. C46402
Exp. 3-31-09
CIVIL
STATE OF CALIFORNIA

The State of California or its officers or agents shall not be responsible for the accuracy or completeness of electronic copies of this plan sheet.

To accompany plans dated 1-4-10

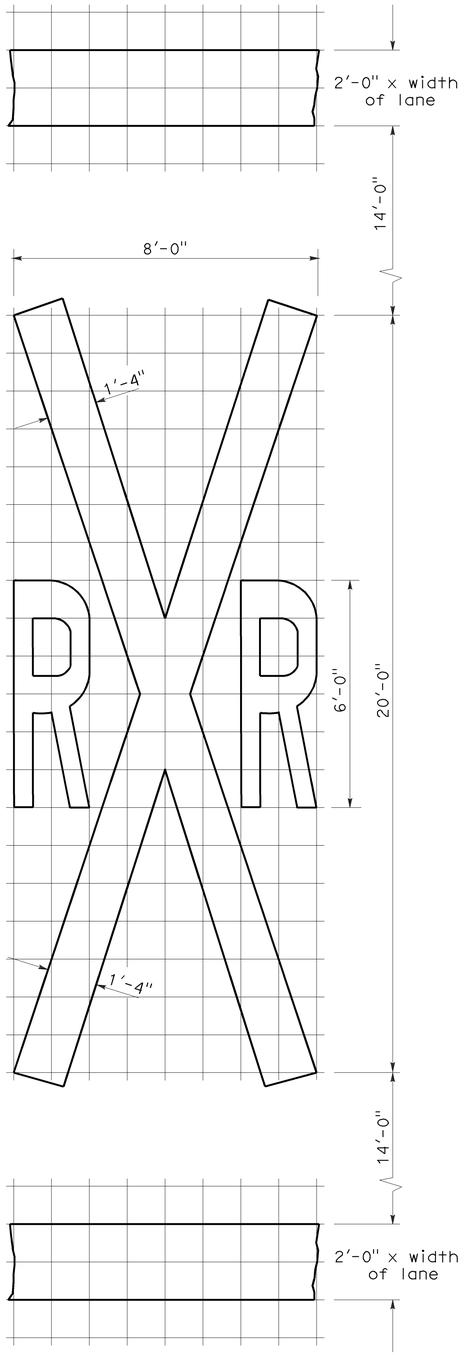

RAILROAD CROSSING SYMBOL

✳70 sq ft DOES NOT INCLUDE THE 2'-0" x VARIABLE WIDTH TRANSVERSE LINES.

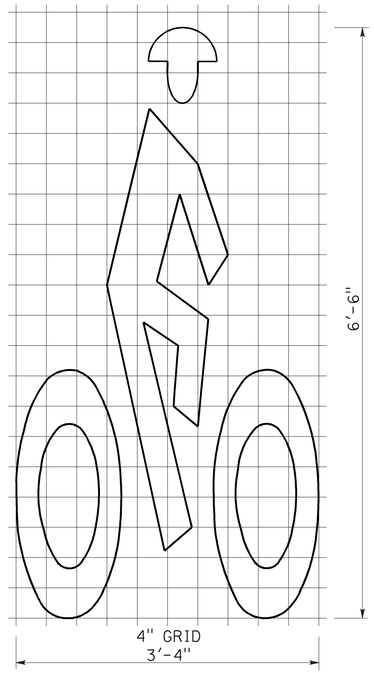

A=7 sq ft

BIKE LANE SYMBOL

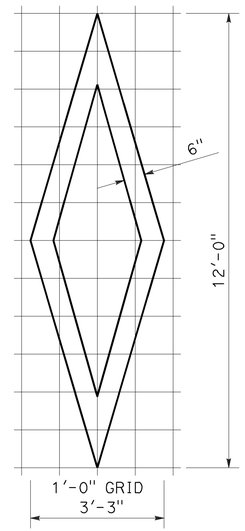

A=11 sq ft

DIAMOND SYMBOL

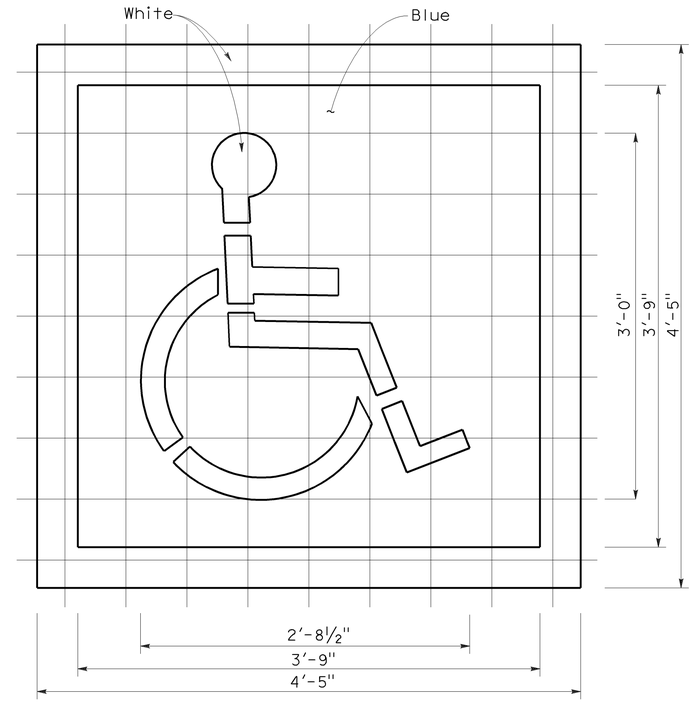

6" GRID
A (White) =9 sq ft
A (Blue) =14 sq ft

INTERNATIONAL SYMBOL OF ACCESSIBILITY MARKING

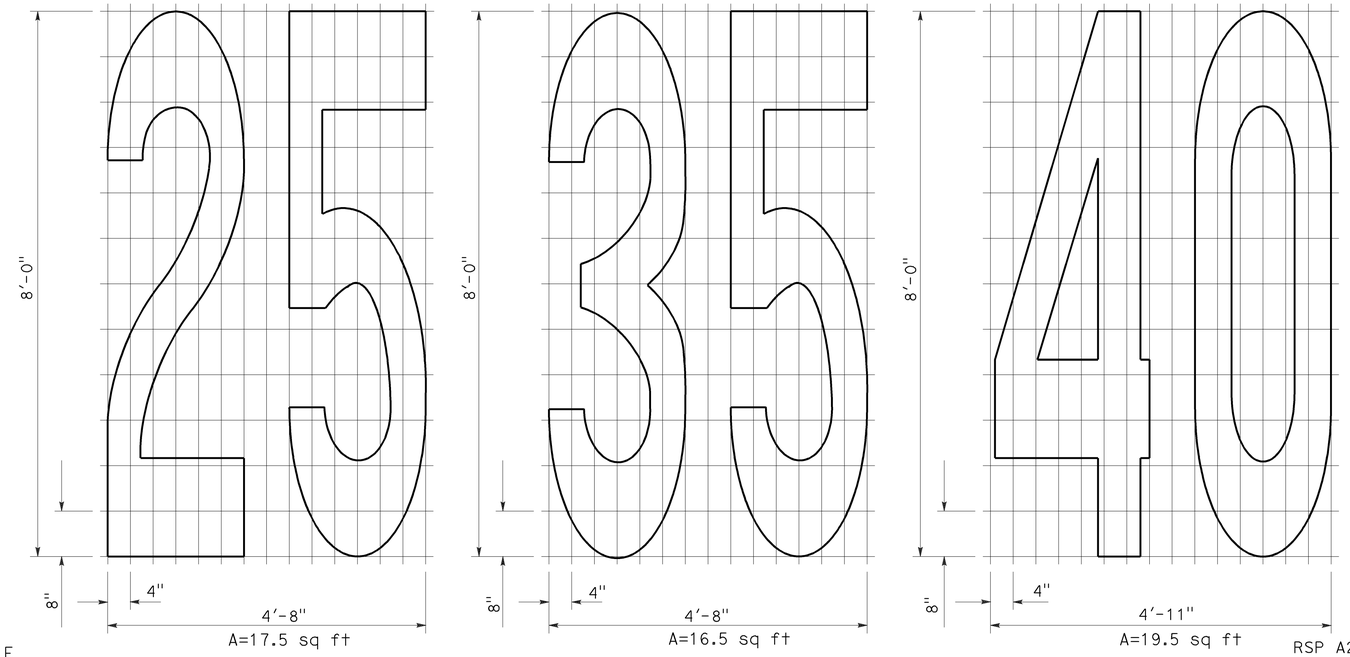

A=17.5 sq ft
A=16.5 sq ft
A=19.5 sq ft

NUMERALS

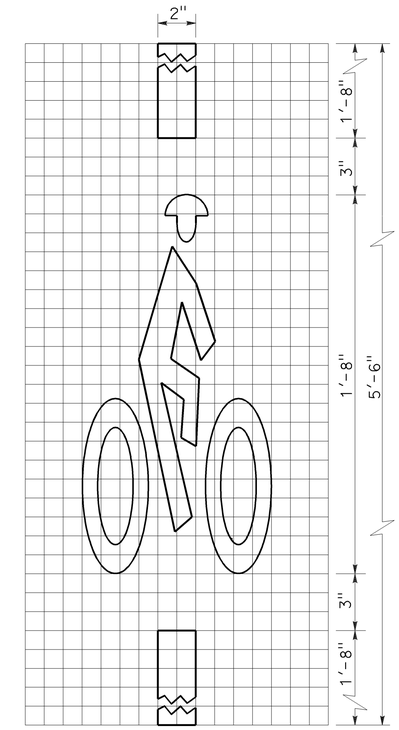

A=2 sq ft

BICYCLE LOOP DETECTOR SYMBOL

NOTE:

1. Minor variations in dimensions may be accepted by the Engineer.

STATE OF CALIFORNIA
DEPARTMENT OF TRANSPORTATION

PAVEMENT MARKINGS SYMBOLS AND NUMERALS

NO SCALE

RSP A24C DATED JUNE 6, 2008 SUPERSEDES STANDARD PLAN A24C DATED MAY 1, 2006 - PAGE 11 OF THE STANDARD PLANS BOOK DATED MAY 2006.

REVISED STANDARD PLAN RSP A24C

2006 REVISED STANDARD PLAN RSP A24C

5-27-08

DIST	COUNTY	ROUTE	POST MILES TOTAL PROJECT	SHEET NO.	TOTAL SHEETS
03	Sac	50	R0.6/17.4	143	233

REGISTERED CIVIL ENGINEER

November 17, 2006
PLANS APPROVAL DATE

REGISTERED PROFESSIONAL ENGINEER Dallas Forester No. C37765 Exp. 12-31-06 CIVIL STATE OF CALIFORNIA

The State of California or its officers or agents shall not be responsible for the accuracy or completeness of electronic copies of this plan sheet.

To accompany plans dated 1-4-10

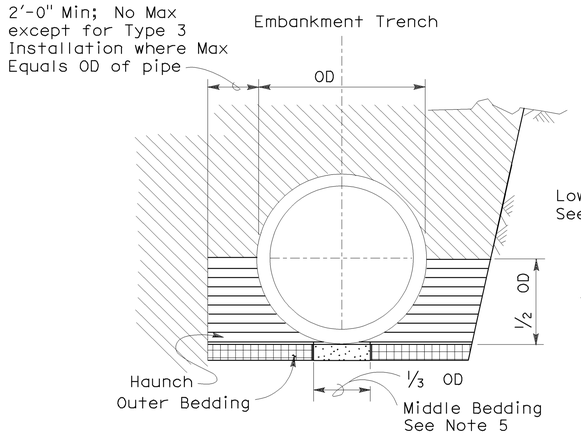

BACKFILL

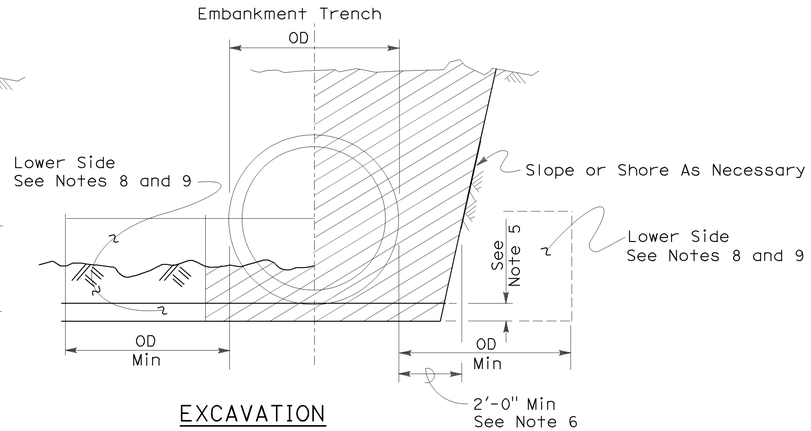

EXCAVATION

Roadway Embankment

Structure Backfill (Culvert) See Note 6

Structure Backfill (Culvert) See Note 6

Loose Backfill

Excavation Structure (Culvert)

TYPE 1 INSTALLATION:

The haunch and outer bedding shall be compacted to a minimum 90 percent relative compaction. In addition, the minimum sand equivalent in these areas shall be 30 and the maximum percentage passing the 75 μm sieve size shall be 12.

TYPE 2 INSTALLATION:

The haunch and outer bedding shall be compacted to a minimum 90 percent relative compaction. In addition, the minimum sand equivalent in these areas shall be 25.

TYPE 3 INSTALLATION:

The haunch and outer bedding shall be compacted to a minimum 85 percent relative compaction. 90 percent relative compaction will be required where the fill over the pipe is less than 4'-0" or 1/2 OD.

NOTES:

1. Unless otherwise shown on the plans or specified in the special provision, the Contractor shall have the option of selecting the class of RCP and the type of installation to be used, provided the height of cover does not exceed the value shown for the RCP selected.
   Example: 24" RCP culvert with maximum cover of 19'-0" the options are:
   a) Class III or stronger with Installation Type 1.
   b) Class III Special or stronger with Installation Type 2.
   c) Class IV Special or stronger with Installation Type 3.
   Cover is defined as the maximum vertical distance from top of the pipe to finished grade within the length of any given culvert.
2. The class of RCP and Installation Type selected shall be the same throughout the length of any given culvert.
3. The "length of any culvert" is defined as the culvert between:
   a) Successive drainage structure (inlets, junction boxes, headwalls, etc.).
   b) A drainage structure and the inlet or outlet end of the culvert.
   c) The inlet and outlet end of the culvert when there are no intervening drainage structures.
4. Oval and arch shaped RCP shall not be used.
5. 1/25 OD Min, not less than 3".
6. Slurry cement backfill may be substituted for backfill in the outer bedding and haunch areas. If slurry is used the outer and middle beddings shall be omitted. Prior to installation the soil under the middle 1/3 of the outside diameter of the pipe shall be softened by scarifying or other means to a minimum depth of 1/25 OD, but not less than 3". Where slurry cement backfill is used clear distance to trench wall may be reduced as set forth in Section 19-3.062 of the Standard Specifications.
7. Backfill shall be placed full width of excavation except where dimensions are shown for backfill width or thickness. Dimensions shown are minimums.
8. Lower side shall be suitable material as determined by the Engineer. Otherwise it shall be considered unsuitable as set forth in Section 19-2.02 of the Standard Specifications. See Note 9.
9. Where the pipe is placed in a trench, if the trench walls are sloped at 5 vertical to 1 horizontal or steeper for at least 90 percent of the trench height or up to not less than 12" from the grading plane, the firmness of the soil in the lower side need not be considered.
10. Non-reinforced precast concrete pipe sizes 3'-0" or smaller may be placed under installation Types 1, 2 or 3.

INSTALLATION TYPE 1

MINIMUM CLASS AND D-LOAD	COVER	
	108" Dia AND SMALLER	OVER 108" Dia
Class II 1000D	14.9'	12.9'
Class III 1350D	15.0' - 20.9'	13.0' - 18.9'
Class III Special 1700D	21.0' - 26.9'	19.0' - 24.9'
Class IV 2000D	27.0' - 31.9'	25.0' - 29.9'
Class IV Special 2500D	32.0' - 40.9'	30.0' - 38.9'
Class V 3000D	41.0' - 49.9'	39.0' - 46.9'
Class V Special 3600D	50.0' - 59.0'	47.0' - 58.0'

INSTALLATION TYPE 2

MINIMUM CLASS AND D-LOAD	COVER
Class II 1000D	9.9'
Class III 1350D	10.0'- 14.9'
Class III Special 1700D	15.0' - 19.9'
Class IV 2000D	20.0' - 24.9'
Class IV Special 2500D	25.0' - 31.9'
Class V 3000D	32.0' - 38.9'
Class V Special 3600D	39.0' - 47.0'

INSTALLATION TYPE 3

MINIMUM CLASS AND D-LOAD	COVER	
	48" Dia AND SMALLER	OVER 48" Dia
Class II 1000D	7.9'	5.9'
Class III 1350D	8.0' - 10.9'	6.0' - 8.9'
Class III Special 1700D	11.0' - 14.9'	9.0' - 12.9'
Class IV 2000D	15.0' - 17.9'	13.0' - 15.9'
Class IV Special 2500D	18.0' - 21.9'	16.0' - 19.9'
Class V 3000D	22.0' - 26.9'	20.0' - 24.9'
Class V Special 3600D	30.0' - 33.0'	25.0' - 31.0'

STATE OF CALIFORNIA
DEPARTMENT OF TRANSPORTATION

EXCAVATION AND BACKFILL CONCRETE PIPE CULVERTS

NO SCALE

RSP A62DA DATED NOVEMBER 17, 2006 SUPERSEDES STANDARD PLAN A62DA DATED MAY 1, 2006 - PAGE 20 OF THE STANDARD PLANS BOOK DATED MAY 2006.

REVISED STANDARD PLAN RSP A62DA

2006 REVISED STANDARD PLAN RSP A62DA

10-26-06

DIST	COUNTY	ROUTE	POST MILES TOTAL PROJECT	SHEET NO.	TOTAL SHEETS
03	Sac	50	R0.6/17.4	144	233

Randell D. Hiatt
REGISTERED CIVIL ENGINEER

June 6, 2008
PLANS APPROVAL DATE

REGISTERED PROFESSIONAL ENGINEER
Randell D. Hiatt
No. C50200
Exp. 6-30-09
CIVIL
STATE OF CALIFORNIA

The State of California or its officers or agents shall not be responsible for the accuracy or completeness of electronic copies of this plan sheet.

To accompany plans dated 1-4-10

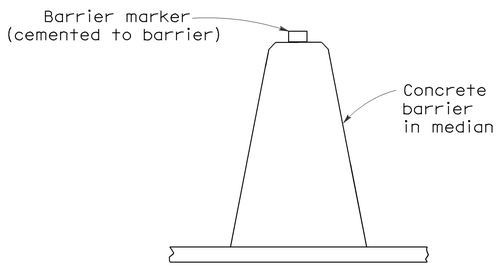

CONCRETE BARRIER TYPE 60 DELINEATION

See Notes 7 and 8

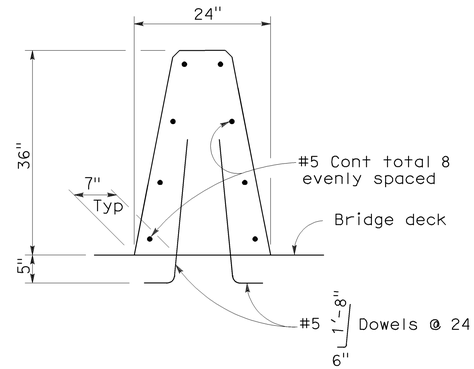

CONCRETE BARRIER TYPE 60A

Details similar to Type 60 except as noted.

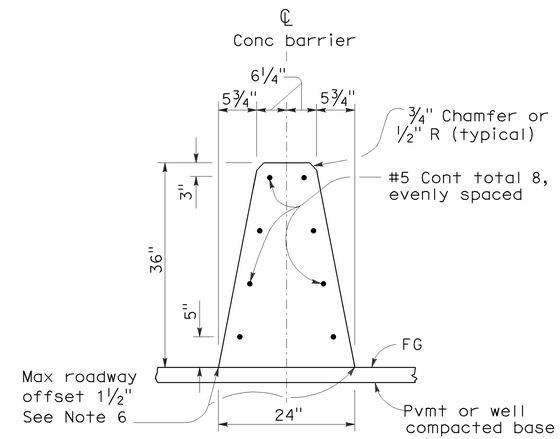

CONCRETE BARRIER TYPE 60

NOTES:

1. See Standard Plan A76B for details of Concrete Barrier Type 60 end anchors, connection to structures and transitions to Concrete Barrier Type 50 and Concrete Barrier Type 60S.
2. See Standard Plan A76C for Concrete Barrier Type 60 transitions at bridge column and sign pedestals.
3. Where glare screen is required on Concrete Barrier Type 60, use Concrete Barrier Type 60G.
4. Where the concrete barrier is added to the face of existing concrete structure, match existing weep holes.
5. Expansion joints in concrete barrier shall be located at all deck, pavement and principal wall joints. Expansion joint filler material shall be the same size as joint or ½" minimum.
6. Where roadway offset is greater than 1½", see Concrete Barrier Type 60C.
7. Barrier delineation to be used when required by the Special Provisions.
8. Spacing of barrier markers to match spacing of raised pavement markers on the adjacent median edgeline pavement delineation.
9. Reinforcing stirrup not required for roadway offsets less than 1'-0".
10. For roadway surfaces offset greater than 1½" to 3", no rebars required. For roadway surfaces offset greater than 3" to 8" use two #4 rebars at 3" above the lower roadway surface. For roadway surfaces offset greater than 8" to 12", use two #4 rebars at 3" above the lower roadway surface and two #4 rebars at 8" above the lower roadway surface. For roadway surfaces offset greater than 12" to 36", use two #4 rebars at 3" above the lower roadway surface and two #4 rebars at every 8" increment vertical spacing above the first two #4 rebars.

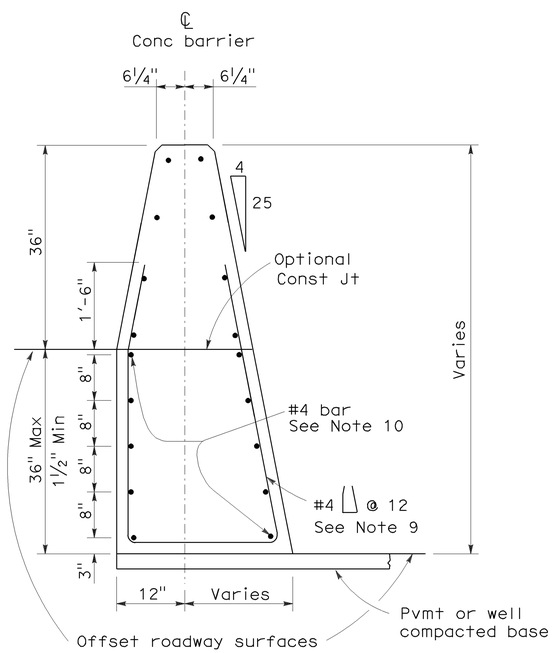

CONCRETE BARRIER TYPE 60C

Details similar to Type 60 except as noted.
Concrete barrier end anchor when necessary.
36" roadway surfaces offset shown.

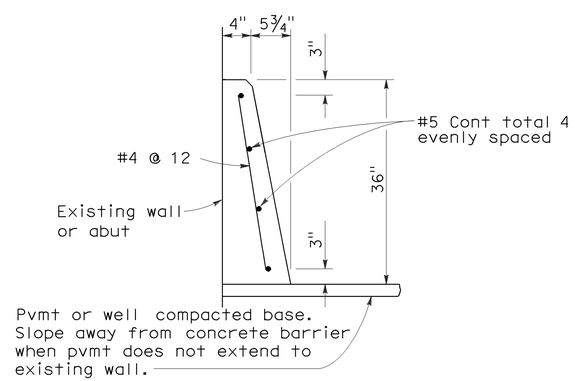

CONCRETE BARRIER TYPE 60D

STATE OF CALIFORNIA
DEPARTMENT OF TRANSPORTATION

CONCRETE BARRIER TYPE 60

NO SCALE

RSP A76A DATED JUNE 6, 2008 SUPERSEDES STANDARD PLAN A76A
DATED MAY 1, 2006 - PAGE 29 OF THE STANDARD PLANS BOOK DATED MAY 2006.

REVISED STANDARD PLAN RSP A76A

2006 REVISED STANDARD PLAN RSP A76A

5-21-08

DIST	COUNTY	ROUTE	POST MILES TOTAL PROJECT	SHEET NO.	TOTAL SHEETS
03	Sac	50	R0.6/17.4	145	233

Randell D. Hiatt
REGISTERED CIVIL ENGINEER

June 6, 2008
PLANS APPROVAL DATE

REGISTERED PROFESSIONAL ENGINEER
Randell D. Hiatt
No. C50200
Exp. 6-30-09
CIVIL
STATE OF CALIFORNIA

The State of California or its officers or agents shall not be responsible for the accuracy or completeness of electronic copies of this plan sheet.

To accompany plans dated 1-4-10

NOTES:

1. When necessary to place dike in front of face of guard railing, only Type C dike may be used. For dike details, see Standard Plan A87B.
2. For standard railing post embedment, see Standard Plans A77C3.
3. Guard railing delineation to be used where shown on the Project Plans.
4. When dike or curb is placed under guard railing, the maximum height of the dike or curb shall be 4". Mountable dike should not be used. For dike and curb details, see Revised Standard Plans RSP A87A and Standard Plan A87B.
5. For details of typical distance between the face of rail and hinge point, see Standard Plan A77C3.

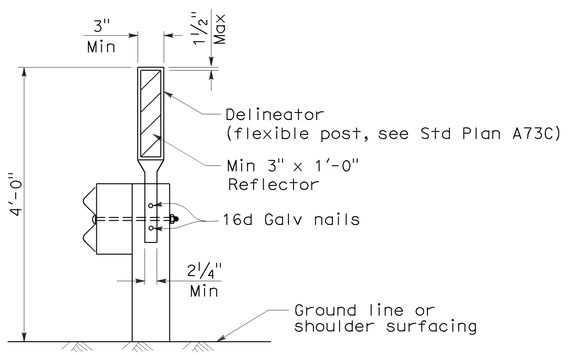

GUARD RAILING DELINEATION

See Note 3

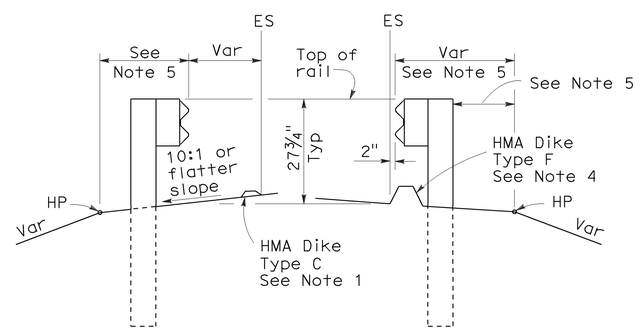

DIKE POSITIONING

See Note 1

STATE OF CALIFORNIA
DEPARTMENT OF TRANSPORTATION

METAL BEAM GUARD RAILING TYPICAL RAILING DELINEATION AND DIKE POSITIONING DETAILS

NO SCALE

RSP A77C4 DATED JUNE 6, 2008 SUPERSEDES STANDARD PLAN A77C4
DATED MAY 1, 2006 - PAGE 47 OF THE STANDARD PLANS BOOK DATED MAY 2006.

REVISED STANDARD PLAN RSP A77C4

2006 REVISED STANDARD PLAN RSP A77C4

12-10-07

DIST	COUNTY	ROUTE	POST MILES TOTAL PROJECT	SHEET NO.	TOTAL SHEETS
03	Sac	50	R0.6/17.4	146	233

Randell D. Hiatt
REGISTERED CIVIL ENGINEER

October 20, 2006
PLANS APPROVAL DATE

REGISTERED PROFESSIONAL ENGINEER
Randell D. Hiatt
No. C50200
Exp. 6-30-07
CIVIL
STATE OF CALIFORNIA

The State of California or its officers or agents shall not be responsible for the accuracy or completeness of electronic copies of this plan sheet.

To accompany plans dated 1-4-10

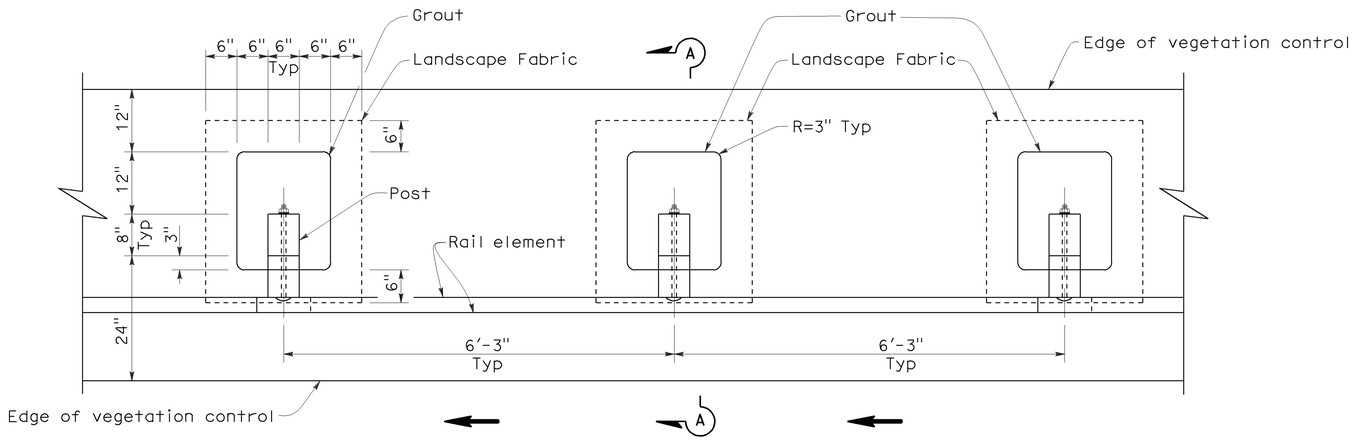

PLAN

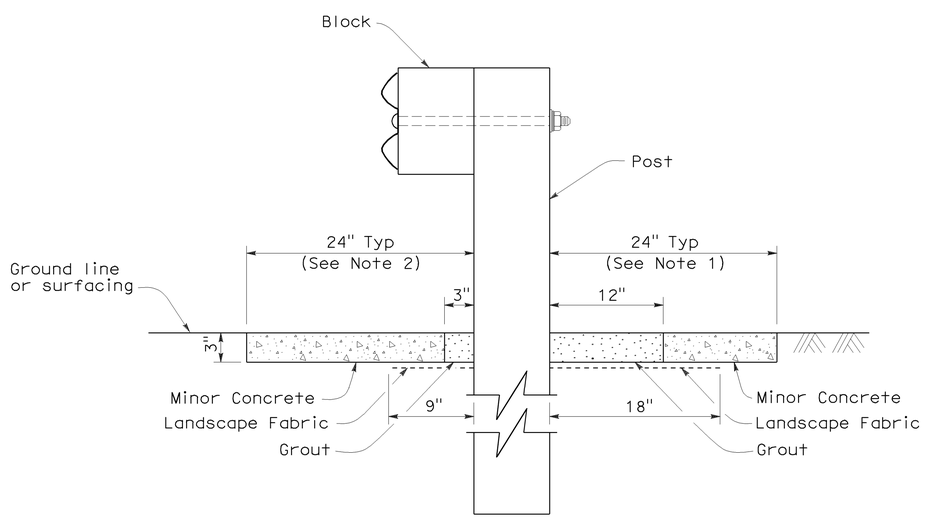

SECTION A-A

NOTES:

1. Where the distance between back of post and hinge point is less than 24", vegetation control to be constructed flush with the back edge of the post.
2. Where dike is constructed under railing, construct vegetation control to back edge of dike. Where paved shoulder is constructed within 24" in front of the post, construct vegetation control to the edge of paved shoulder.
3. Direction of adjacent traffic indicated by ← .

STATE OF CALIFORNIA
DEPARTMENT OF TRANSPORTATION

METAL BEAM GUARD RAILING TYPICAL VEGETATION CONTROL STANDARD RAILING SECTION

NO SCALE

NSP A77C5 DATED OCTOBER 20, 2006 SUPPLEMENTS THE STANDARD PLANS BOOK DATED MAY 2006.

NEW STANDARD PLAN NSP A77C5

2006 NEW STANDARD PLAN NSP A77C5

7-17-06

DIST	COUNTY	ROUTE	POST MILES TOTAL PROJECT	SHEET NO.	TOTAL SHEETS
03	Sac	50	R0.6/17.4	147	233

Randell D. Hiatt
REGISTERED CIVIL ENGINEER

October 20, 2006
PLANS APPROVAL DATE

REGISTERED PROFESSIONAL ENGINEER
Randell D. Hiatt
No. C50200
Exp. 6-30-07
CIVIL
STATE OF CALIFORNIA

The State of California or its officers or agents shall not be responsible for the accuracy or completeness of electronic copies of this plan sheet.

To accompany plans dated 1-4-10

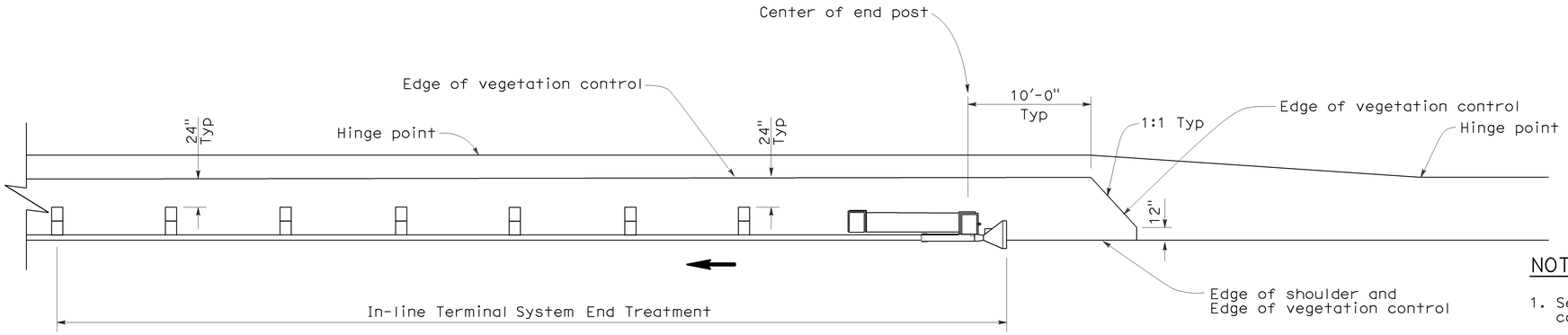

PLAN

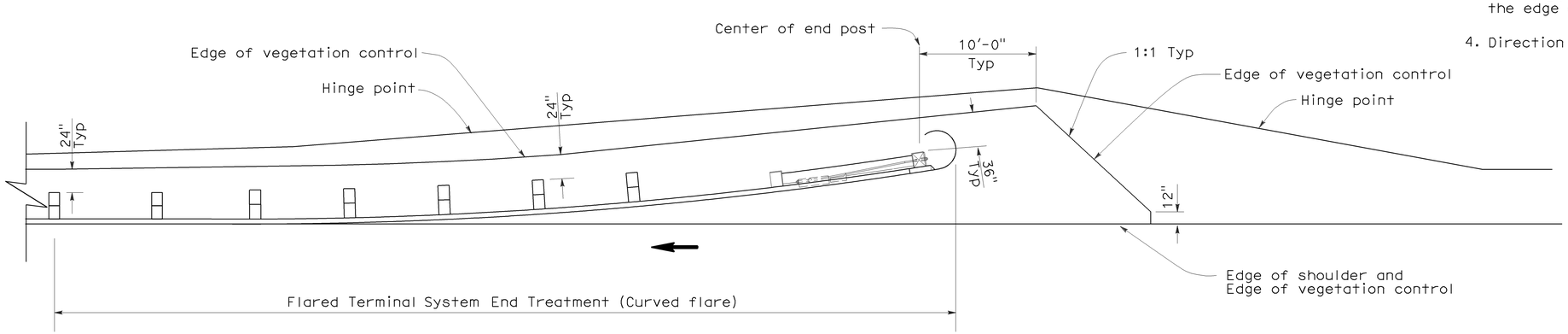

PLAN

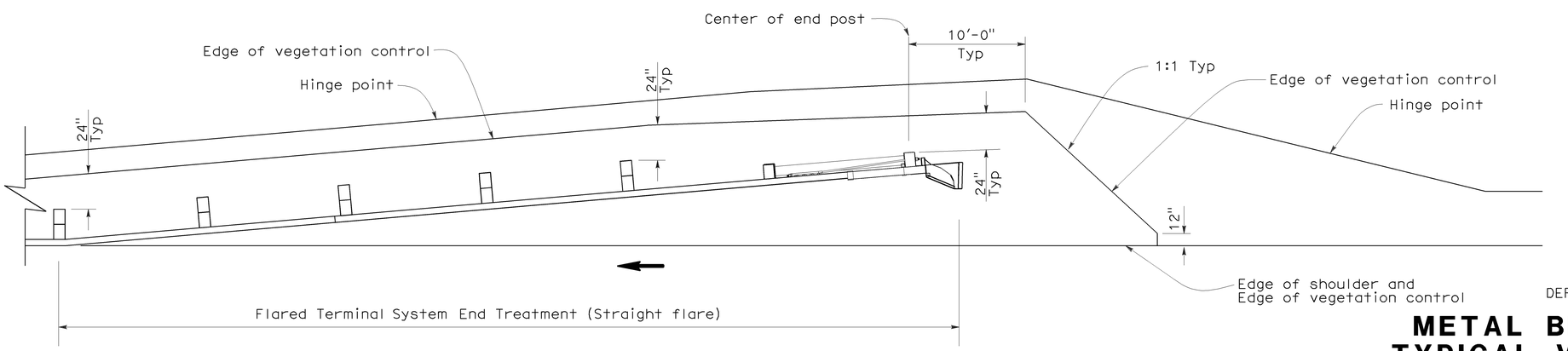

PLAN

NOTES:

1. See New Standard Plan NSP A77C5 for additional vegetation control details.
2. Where the distance between back of post and hinge point is less than 24", vegetation control to be constructed flush with the back edge of the post.
3. Where dike is constructed under railing, construct vegetation control to back edge of dike. Where paved shoulder is constructed within 24" in front of the post, construct vegetation control to the edge of paved shoulder.
4. Direction of adjacent traffic indicated by ←.

STATE OF CALIFORNIA
DEPARTMENT OF TRANSPORTATION

METAL BEAM GUARD RAILING TYPICAL VEGETATION CONTROL FOR TERMINAL SYSTEM END TREATMENTS

NO SCALE

NSP A77C6 DATED OCTOBER 20, 2006 SUPPLEMENTS THE STANDARD PLANS BOOK DATED MAY 2006.

NEW STANDARD PLAN NSP A77C6

2006 NEW STANDARD PLAN NSP A77C6

7-17-06

DIST	COUNTY	ROUTE	POST MILES TOTAL PROJECT	SHEET NO.	TOTAL SHEETS
03	Sac	50	R0.6/17.4	148	233

Randell D. Hiatt
REGISTERED CIVIL ENGINEER

October 20, 2006
PLANS APPROVAL DATE

REGISTERED PROFESSIONAL ENGINEER
Randell D. Hiatt
No. C50200
Exp. 6-30-07
CIVIL
STATE OF CALIFORNIA

The State of California or its officers or agents shall not be responsible for the accuracy or completeness of electronic copies of this plan sheet.

To accompany plans dated 1-4-10

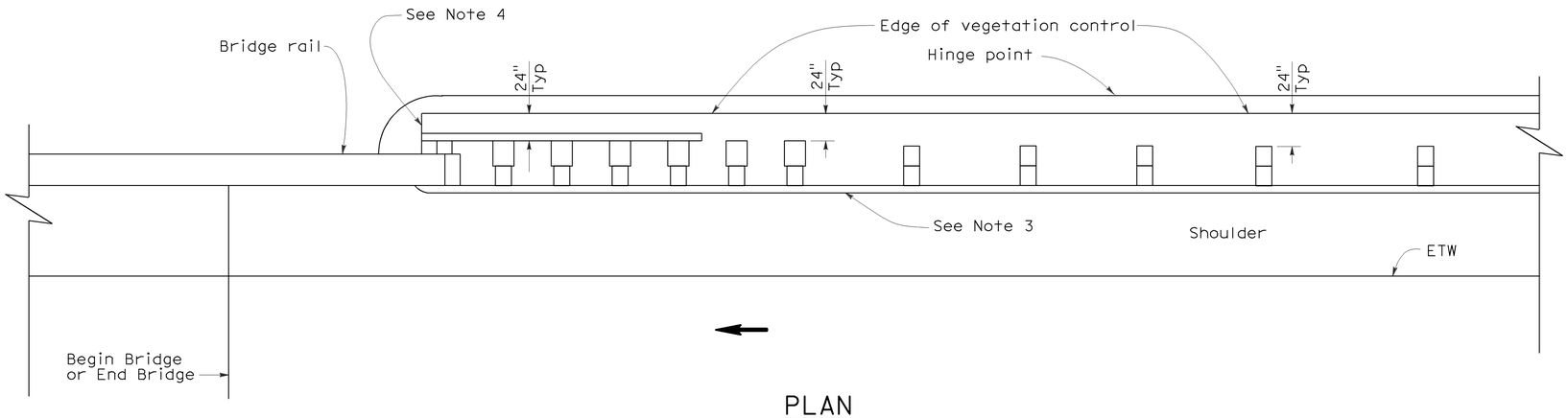

PLAN

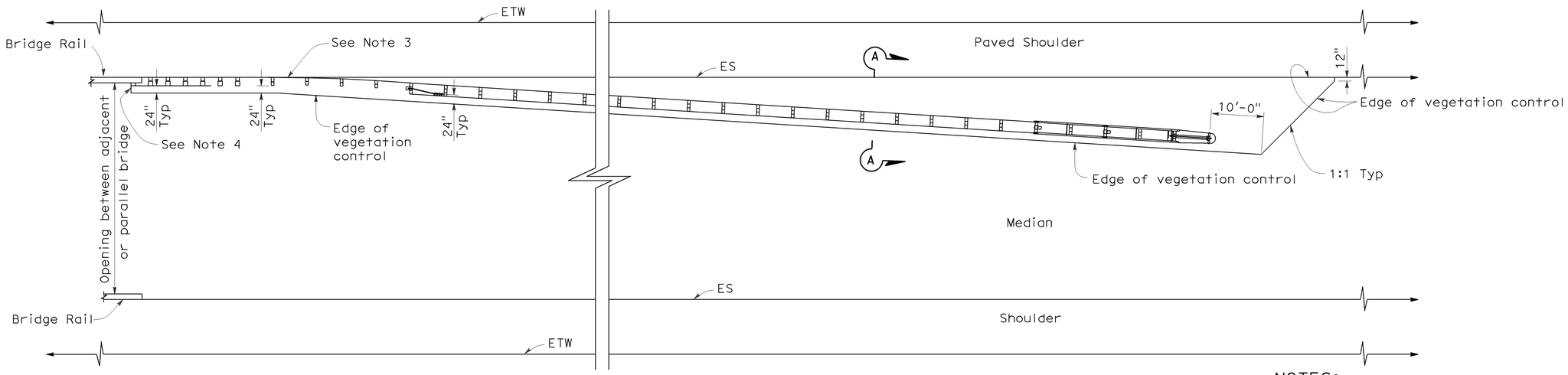

PLAN

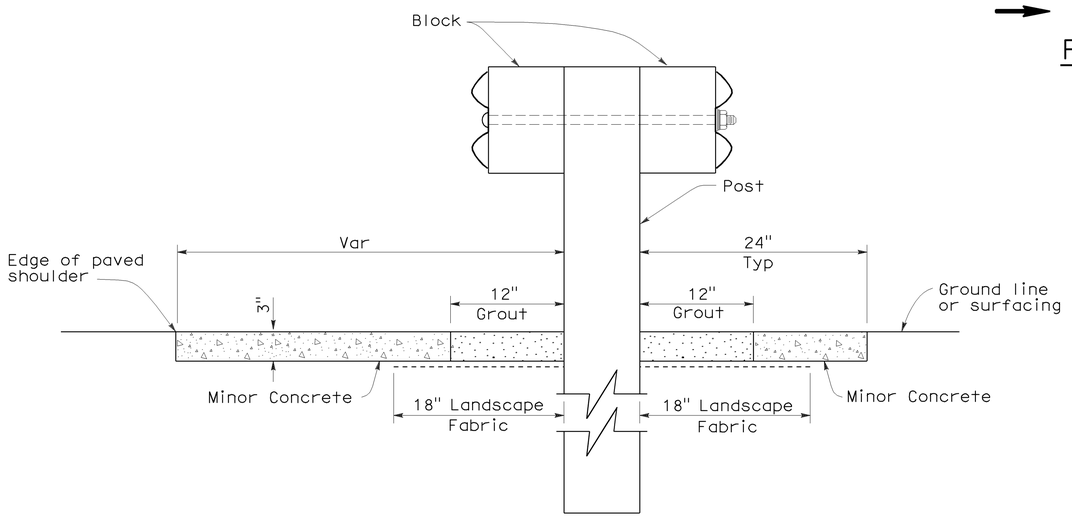

SECTION A-A

NOTES:

1. See New Standard Plan NSP A77C5 for additional vegetation control details.
2. Where the distance between back of post and hinge point is less than 24", vegetation control to be constructed flush with the back edge of the post.
3. Where dike is constructed under railing, construct vegetation control to back edge of dike. Where paved shoulder is constructed within 24" in front of the post, construct vegetation control to the edge of paved shoulder.
4. End vegetation control at end of backside rail element.
5. Direction of adjacent traffic indicated by ←.

STATE OF CALIFORNIA
DEPARTMENT OF TRANSPORTATION

METAL BEAM GUARD RAILING TYPICAL VEGETATION CONTROL AT STRUCTURE APPROACH AND DEPARTURE

NO SCALE

NSP A77C7 DATED OCTOBER 20, 2006 SUPPLEMENTS THE STANDARD PLANS BOOK DATED MAY 2006.

NEW STANDARD PLAN NSP A77C7

2006 NEW STANDARD PLAN NSP A77C7

7-17-06

DIST	COUNTY	ROUTE	POST MILES TOTAL PROJECT	SHEET NO.	TOTAL SHEETS
03	Sac	50	R0.6/17.4	149	233

Randell D. Hiatt
REGISTERED CIVIL ENGINEER

June 6, 2008
PLANS APPROVAL DATE

REGISTERED PROFESSIONAL ENGINEER Randell D. Hiatt No. C50200 Exp. 6-30-09 CIVIL STATE OF CALIFORNIA

The State of California or its officers or agents shall not be responsible for the accuracy or completeness of electronic copies of this plan sheet.

To accompany plans dated 1-4-10

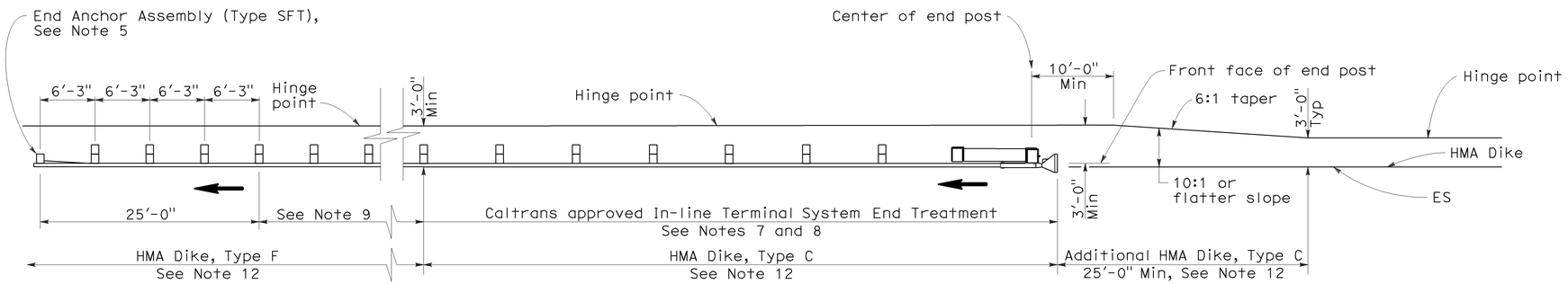

TYPE 11A LAYOUT

(EMBANKMENT GUARD INSTALLATION WITH IN-LINE END TREATMENT AT TRAFFIC APPROACH END OF RAILING)
See Note 6

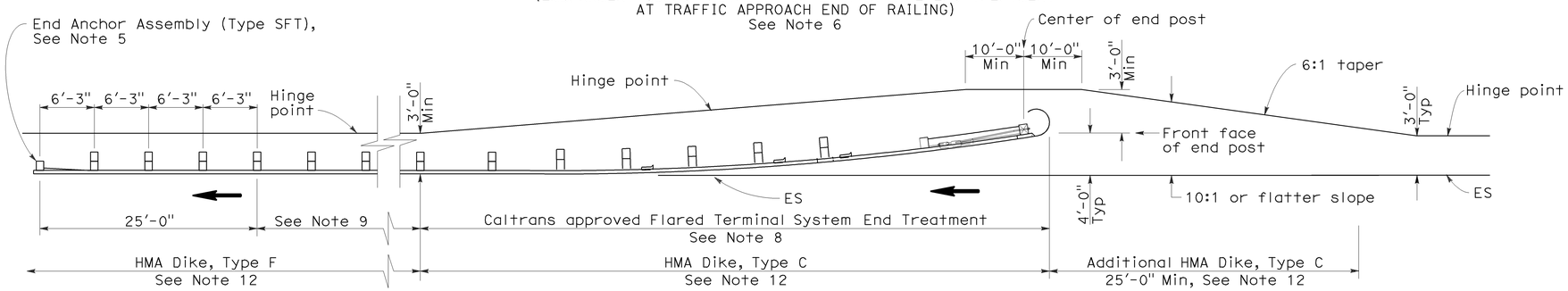

TYPE 11B LAYOUT

(EMBANKMENT GUARD RAILING INSTALLATION WITH FLARED END TREATMENT AT TRAFFIC APPROACH END OF RAILING)
See Note 6

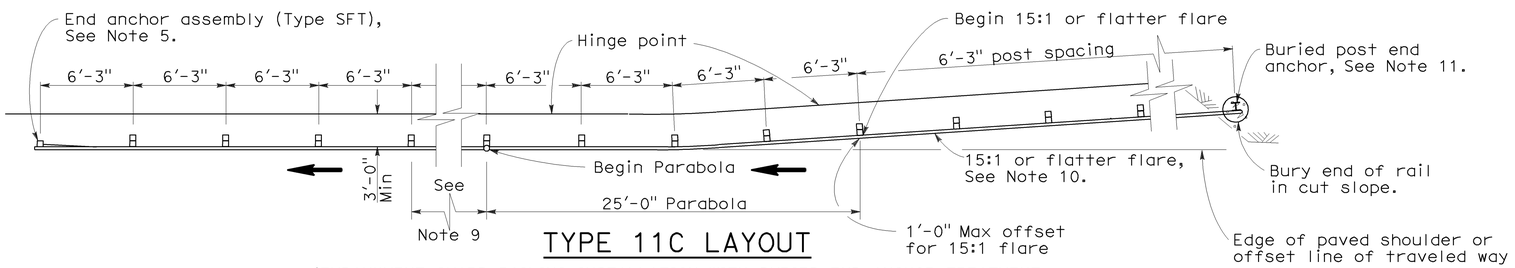

TYPE 11C LAYOUT

(EMBANKMENT GUARD RAILING INSTALLATION WITH BURIED END ANCHOR TREATMENT AT TRAFFIC APPROACH END OF RAILING)
See Notes 6 and 12

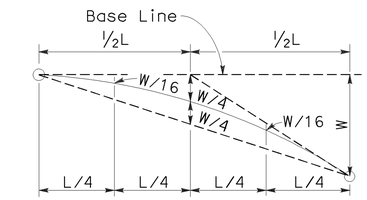

TYPICAL PARABOLIC LAYOUT

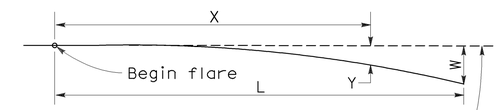

Base Line (Edge of paved shoulder or offset line of edge of traveled way)

$$Y = \frac{WX^2}{L^2}$$

Y = Offset from base line
W = Maximum offset
X = Distance along base line
L = Length of flare

PARABOLIC FLARE OFFSETS

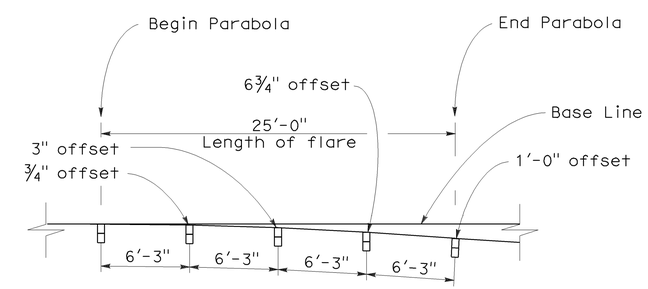

TYPICAL FLARE OFFSETS FOR 1 FOOT MAX END OFFSET

NOTES:

1. Line post, blocks and hardware to be used are shown on Standard Plans A77A1, A77A2, A77B1, A77C1, and A77C2.
2. Guard rail post spacing to be 6'-3" center to center, except as otherwise noted.
3. Except as noted, line posts are 6" x 8" x 6'-0" wood with 6" x 8" x 1'-2" wood blocks. W6 x 9 steel posts, 6'-0" in length, with 6" x 8" x 1'-2" notched wood blocks or recycled plastic blocks may be used for 6" x 8" x 6'-0" wood post with 6" x 8" x 1'-2" wood blocks where applicable and when specified.
4. Direction of adjacent traffic indicated by ⟶.
5. For End Anchor Assembly (Type SFT) details, see Standard Plan A77H1.
6. Layout Types 11A, 11B or 11C are typically used where guard railing is recommended to shield embankment slopes and a crashworthy end treatment is required for only one direction of traffic.
7. In-line Terminal System End Treatments are used where site conditions will not accommodate a flared end treatment.
8. The type of terminal system end treatment to be used will be shown on the Project Plans.
9. Dependent on site conditions (embankment height and side slope), construction of additional guard railing (length equal to multiples of 12'-6" with 6'-3" post spacing) may be advisable.
10. The 15:1 or flatter flare used with buried end anchors is based on the edge of the paved shoulder or offset line of edge of the traveled way. The length of guard railing within the 15:1 or flatter flare is based on site conditions and should be a length equal to multiples of 12'-6".
11. For details of the buried post end anchor used with Type 11C Layout, see Standard Plan A77I2.
12. Where placement of dike is required with guard railing installations, see Revised Standard Plan RSP A77C4 for dike positioning details.

STATE OF CALIFORNIA
DEPARTMENT OF TRANSPORTATION

METAL BEAM GUARD RAILING TYPICAL LAYOUTS FOR EMBANKMENTS

NO SCALE

RSP A77E1 DATED JUNE 6, 2008 SUPERSEDES STANDARD PLAN A77E1 DATED MAY 1, 2006 - PAGE 48 OF THE STANDARD PLANS BOOK DATED MAY 2006.

REVISED STANDARD PLAN RSP A77E1

2006 REVISED STANDARD PLAN RSP A77E1

12-10-07

DIST	COUNTY	ROUTE	POST MILES TOTAL PROJECT	SHEET NO.	TOTAL SHEETS
03	Sac	50	R0.6/17.4	150	233

Randell D. Hiatt
REGISTERED CIVIL ENGINEER

June 6, 2008
PLANS APPROVAL DATE

REGISTERED PROFESSIONAL ENGINEER
Randell D. Hiatt
No. C50200
Exp. 6-30-09
CIVIL
STATE OF CALIFORNIA

The State of California or its officers or agents shall not be responsible for the accuracy or completeness of electronic copies of this plan sheet.

To accompany plans dated 1-4-10

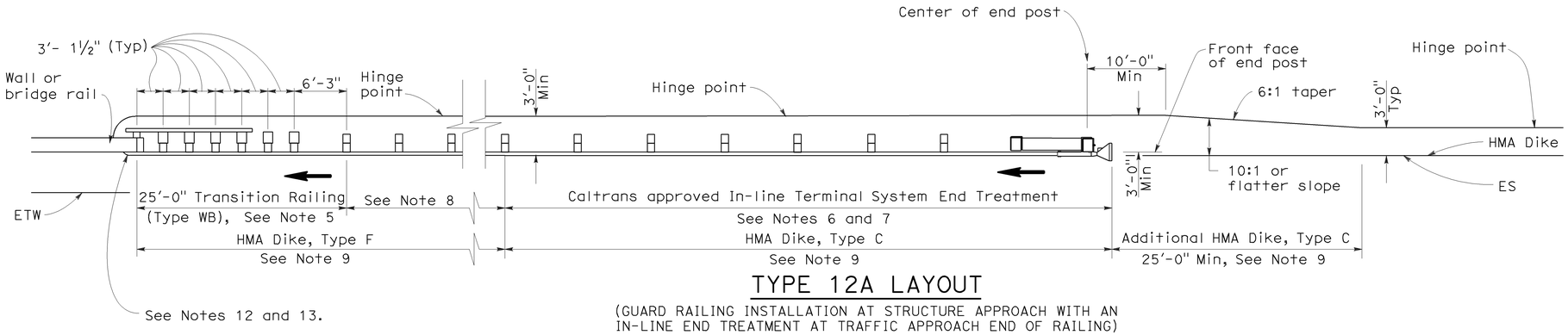

TYPE 12A LAYOUT

(GUARD RAILING INSTALLATION AT STRUCTURE APPROACH WITH AN IN-LINE END TREATMENT AT TRAFFIC APPROACH END OF RAILING)
See Notes 10

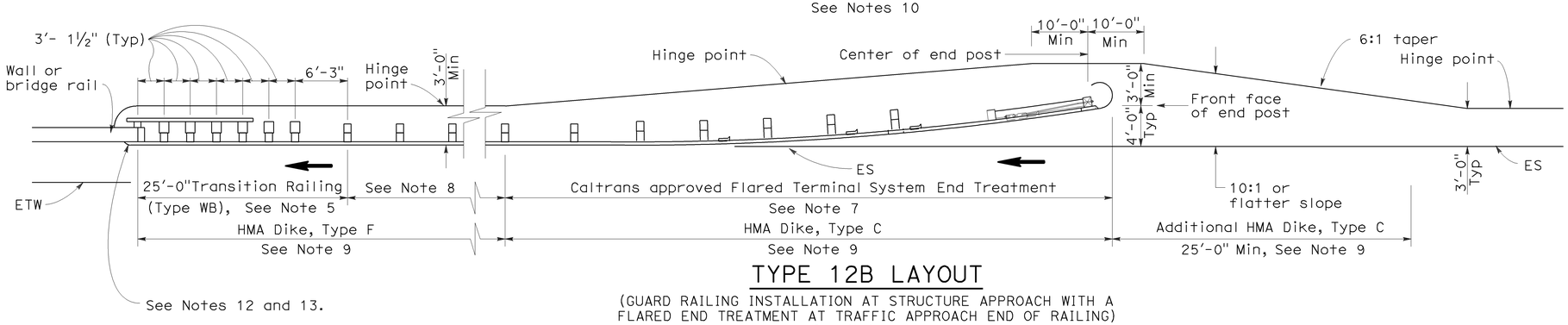

TYPE 12B LAYOUT

(GUARD RAILING INSTALLATION AT STRUCTURE APPROACH WITH A FLARED END TREATMENT AT TRAFFIC APPROACH END OF RAILING)
See Notes 10

NOTES:

1. Line post, blocks and hardware to be used are shown on Standard Plans A77A1, A77A2, A77B1, A77C1 and A77C2.
2. Guard rail post spacing to be 6'-3" center to center, except as otherwise noted.
3. Except as noted, line posts are 6" x 8" x 6'-0" wood with 6" x 8" x 1'-2" wood blocks. W6 x 9 steel posts, 6'-0" in length, with 6" x 8" x 1'-2" notched wood blocks or plastic blocks may be used for 6" x 8" x 6'-0" wood posts with 6" x 8" x 1'-2" wood blocks where applicable and when specified.
4. Direction of adjacent traffic indicated by ➡.
5. For Transition Railing (Type WB) details for Types 12A and 12B Layouts, see Standard Plan A77J4.
6. In-line Terminal System End Treatments are used where site conditions will not accommodate a flared end treatment.
7. The type of terminal system end treatment to be used will be shown on the Project Plans.
8. Dependent on site conditions (embankment height, side slopes, or other fixed objects), it may be advisable to construct additional guard railing (a length equal to multiples of 12'-6" with 6'-3" post spacing) between the transition railing and end treatment.
9. Where placement of dike is required with guard railing installations, see Revised Standard Plan RSP A77C4 for dike positioning details.
10. Type 12A or Type 12B Layouts are typically used:
    a. To the right of approaching traffic, at the end of a structure, on two-lane conventional highway where the roadbed width across the structure is less than 40 feet.
    b. To the left of approaching traffic, at the end of a structure, on two-lane conventional highway where the roadbed width across the structure is less than 40 feet.
    c. To the right of approaching traffic at the end of each structure on multilane freeways or expressways with separate adjacent or parallel bridges.
    d. To the right of approaching traffic at the end of the structure on multilane freeways or expressways with decked median on the bridge.
11. See Revised Standard Plan RSP A77F3 for typical layout used left of approaching traffic at the ends of each structure on multilane freeways or expressways with separate adjacent or parallel bridges.
12. For additional details of typical connections to bridge rail, see Connection Detail AA on Revised Standard Plans RSP A77J1 and RSP A77J2 and Connection Detail FF on Standard Plans A77K1 and A77K2.
13. For additional details of a typical connection to walls or abutments, see Standard Plan A77J3.

STATE OF CALIFORNIA
DEPARTMENT OF TRANSPORTATION

METAL BEAM GUARD RAILING TYPICAL LAYOUTS FOR STRUCTURE APPROACH

NO SCALE

RSP A77F1 DATED JUNE 6, 2008 SUPERSEDES STANDARD PLAN A77F1
DATED MAY 1, 2006 - PAGE 54 OF THE STANDARD PLANS BOOK DATED MAY 2006.

REVISED STANDARD PLAN RSP A77F1

2006 REVISED STANDARD PLAN RSP A77F1

12-10-07

DIST	COUNTY	ROUTE	POST MILES TOTAL PROJECT	SHEET NO.	TOTAL SHEETS
03	Sac	50	R0.6/17.4	151	233

Randell D. Hiatt
REGISTERED CIVIL ENGINEER

June 6, 2008
PLANS APPROVAL DATE

REGISTERED PROFESSIONAL ENGINEER
Randell D. Hiatt
No. C50200
Exp. 6-30-09
CIVIL
STATE OF CALIFORNIA

The State of California or its officers or agents shall not be responsible for the accuracy or completeness of electronic copies of this plan sheet.

To accompany plans dated 1-4-10

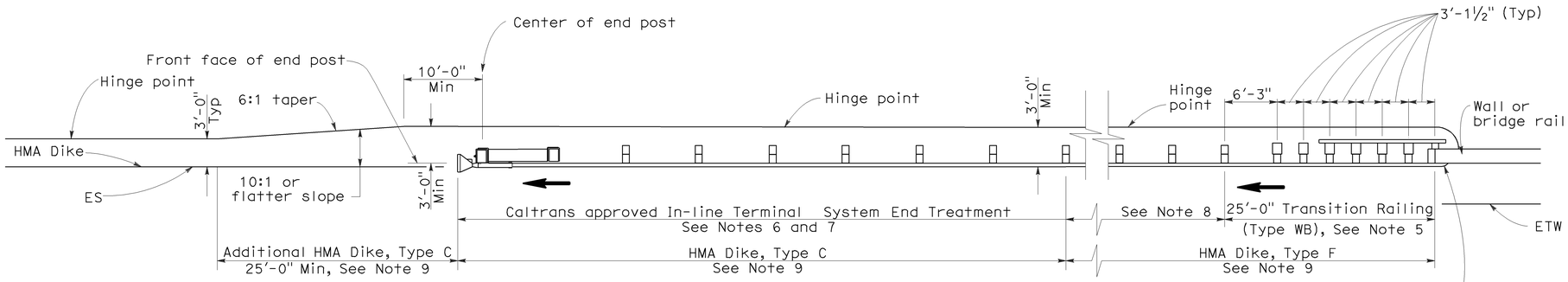

TYPE 12AA LAYOUT

(GUARD RAILING INSTALLATION AT STRUCTURE DEPARTURE WITH AN IN-LINE END TREATMENT AT TRAILING END OF RAILING)
See Notes 9 and 10

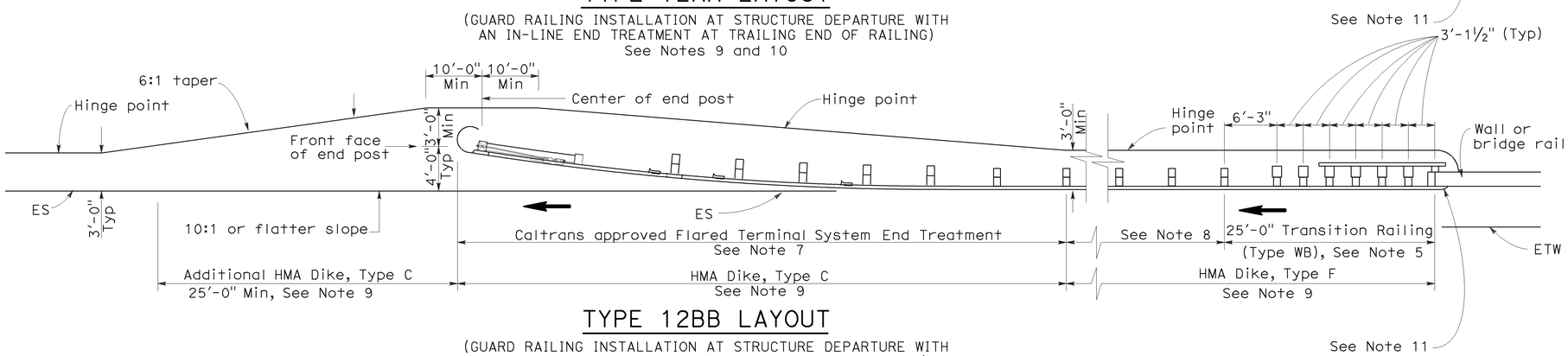

TYPE 12BB LAYOUT

(GUARD RAILING INSTALLATION AT STRUCTURE DEPARTURE WITH A FLARED END TREATMENT AT TRAILING END OF RAILING)
See Notes 9 and 10

NOTES:

1. Line post, blocks and hardware to be used are shown on Standard Plans A77A1, A77A2, A77B1, A77C1 and A77C2.
2. Guard rail post spacing to be 6'-3" center to center, except as otherwise noted.
3. Except as noted, line posts are 6" x 8" x 6'-0" wood with 6" x 8" x 1'-2" wood blocks. W6 x 9 steel posts, 6'-0" in length, with 6" x 8" x 1-2" notched wood blocks or notched recycled plastic blocks may be used for 6" x 8" x 6'-0" wood posts with 6" x 8" x 1'-2" wood blocks where applicable and when specified.
4. Direction of adjacent traffic indicated by ➡.
5. For Transition Railing (Type WB) details for Types 12AA and 12BB Layouts, see Standard Plan A77J4.
6. In-line Terminal System Treatments are used where site conditions will not accommodate a flared end treatment.
7. The type of terminal system to be used will be shown on the Project Plans.
8. Dependent on site conditions (embankment height, side slopes, other fixed objects), it may be advisable to construct additional guard railing (a length equal to multiples of 12'-6" with 6'-3" post spacing) between the transition railing and end treatments.
9. Where placement of dike is required with guard railing installations, see Revised Standard Plan RSP A77C4 for dike positioning details.
10. Type 12AA or Type 12BB Layouts are typically used to the right of traffic departing a structure on two-way conventional highways where the roadbed width across the structure is less than 40 feet.
11. For additional details of typical connections to bridge rail, see Connection Detail CC on Revised Standard Plan RSP A77J2 and Connection Detail HH on Standard Plans A77k2.

STATE OF CALIFORNIA
DEPARTMENT OF TRANSPORTATION

METAL BEAM GUARD RAILING TYPICAL LAYOUTS FOR STRUCTURE DEPARTURE

NO SCALE

RSP A77F4 DATED JUNE 6, 2008 SUPERSEDES STANDARD PLAN A77F4
DATED MAY 1, 2006 - PAGE 57 OF THE STANDARD PLANS BOOK DATED MAY 2006.

REVISED STANDARD PLAN RSP A77F4

2006 REVISED STANDARD PLAN RSP A77F4

12-10-07

DIST	COUNTY	ROUTE	POST MILES TOTAL PROJECT	SHEET NO.	TOTAL SHEETS
03	Sac	50	R0.6/17.4	152	233

Randell D. Hiatt
REGISTERED CIVIL ENGINEER

June 6, 2008
PLANS APPROVAL DATE

REGISTERED PROFESSIONAL ENGINEER
Randell D. Hiatt
No. C50200
Exp. 6-30-09
CIVIL
STATE OF CALIFORNIA

The State of California or its officers or agents shall not be responsible for the accuracy or completeness of electronic copies of this plan sheet.

To accompany plans dated 1-4-10

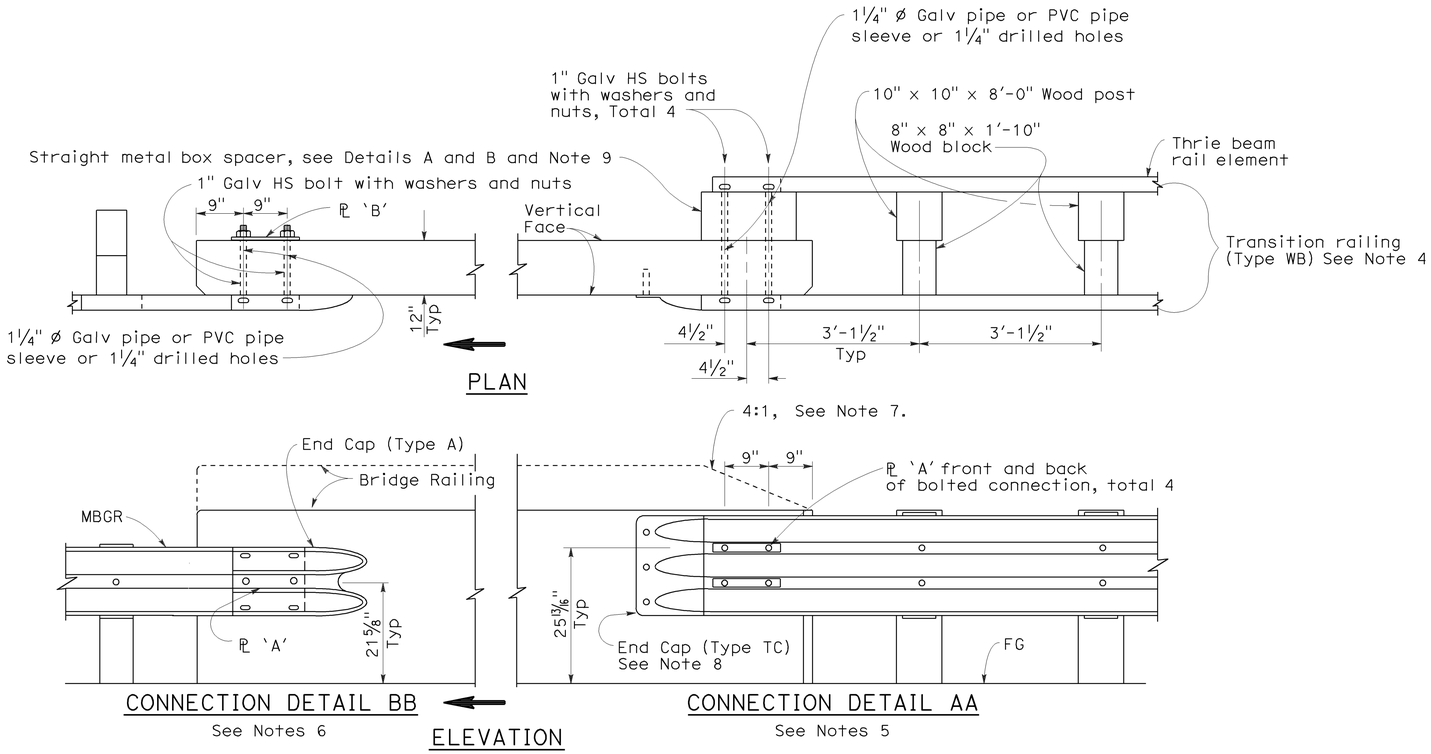

GUARD RAILING CONNECTION TO BRIDGE RAILING WITHOUT SIDEWALK

NOTES:

1. See Revised Standard Plan RSP A77J2 for additional connection details to bridges without sidewalks.
2. Additional details of posts, blocks and hardware are shown on Standard Plan A77B1, A77C1 and A77C2.
3. Direction of adjacent traffic indicated by ➡.
4. For additional details of Transition Railing (Type WB), see Standard Plan A77J4. Transition Railing (Type WB) transitions the 12 gage w-beam standard railing section of guard railing to a heavier gage nested thrie beam railing section which is connected to the concrete bridge railing.
5. For typical use of Connection Detail AA, see Layout Types 12A and 12B on Revised Standard Plan RSP A77F1, Layout Types 12C and 12D on Standard Plan A77F2, and Layout Type 12E on Revised Standard Plan RSP A77F3.
6. For typical use of Connection Detail BB, see Layout Type 12D (structure departure railing connection) on Standard Plan A77F2 and Layout Type 12DD on Standard Plan A77F5.
7. Where the height of the bridge railing exceeds the height of the thrie beam railing by more than 1" at Connection Detail AA, taper the top of the end of the bridge railing at 4:1 to match the top elevation of the thrie beam rail.
8. For details of End Cap (Type TC), see Standard Plan A77J4.
9. See Standard Plan A77J4 for additional details regarding depth dimension for straight metal box spacer.

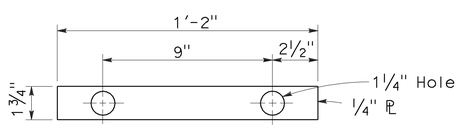

PLATE 'A'

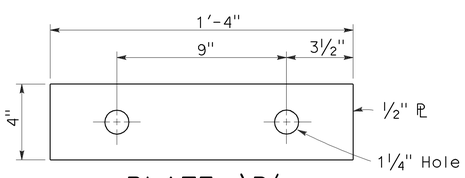

PLATE 'B'
(For backside of connection BB)

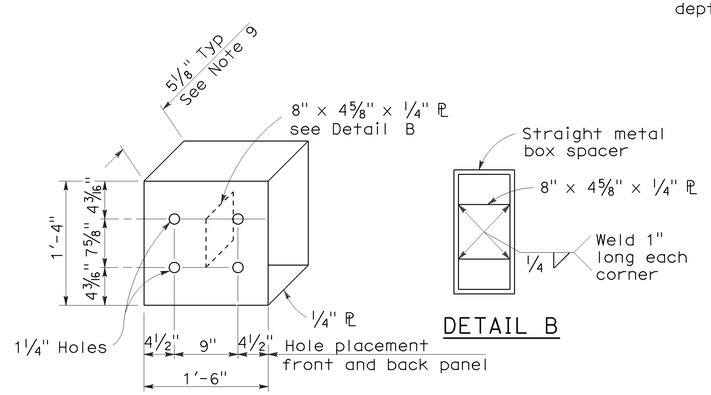

DETAIL B

DETAIL A

STRAIGHT METAL BOX SPACER

STATE OF CALIFORNIA
DEPARTMENT OF TRANSPORTATION

METAL BEAM GUARD RAILING CONNECTIONS TO BRIDGE RAILINGS WITHOUT SIDEWALKS DETAILS No.1

NO SCALE

RSP A77J1 DATED JUNE 6, 2008 SUPERSEDES STANDARD PLAN A77J1 DATED MAY 1, 2006 - PAGE 72 OF THE STANDARD PLANS BOOK DATED MAY 2006.

REVISED STANDARD PLAN RSP A77J1

2006 REVISED STANDARD PLAN RSP A77J1

12-10-07

DIST	COUNTY	ROUTE	POST MILES TOTAL PROJECT	SHEET NO.	TOTAL SHEETS
03	Sac	50	R0.6/17.4	153	233

Randell D. Hiatt
REGISTERED CIVIL ENGINEER

June 6, 2008
PLANS APPROVAL DATE

REGISTERED PROFESSIONAL ENGINEER
Randell D. Hiatt
No. C50200
Exp. 6-30-09
CIVIL
STATE OF CALIFORNIA

The State of California or its officers or agents shall not be responsible for the accuracy or completeness of electronic copies of this plan sheet.

To accompany plans dated 1-4-10

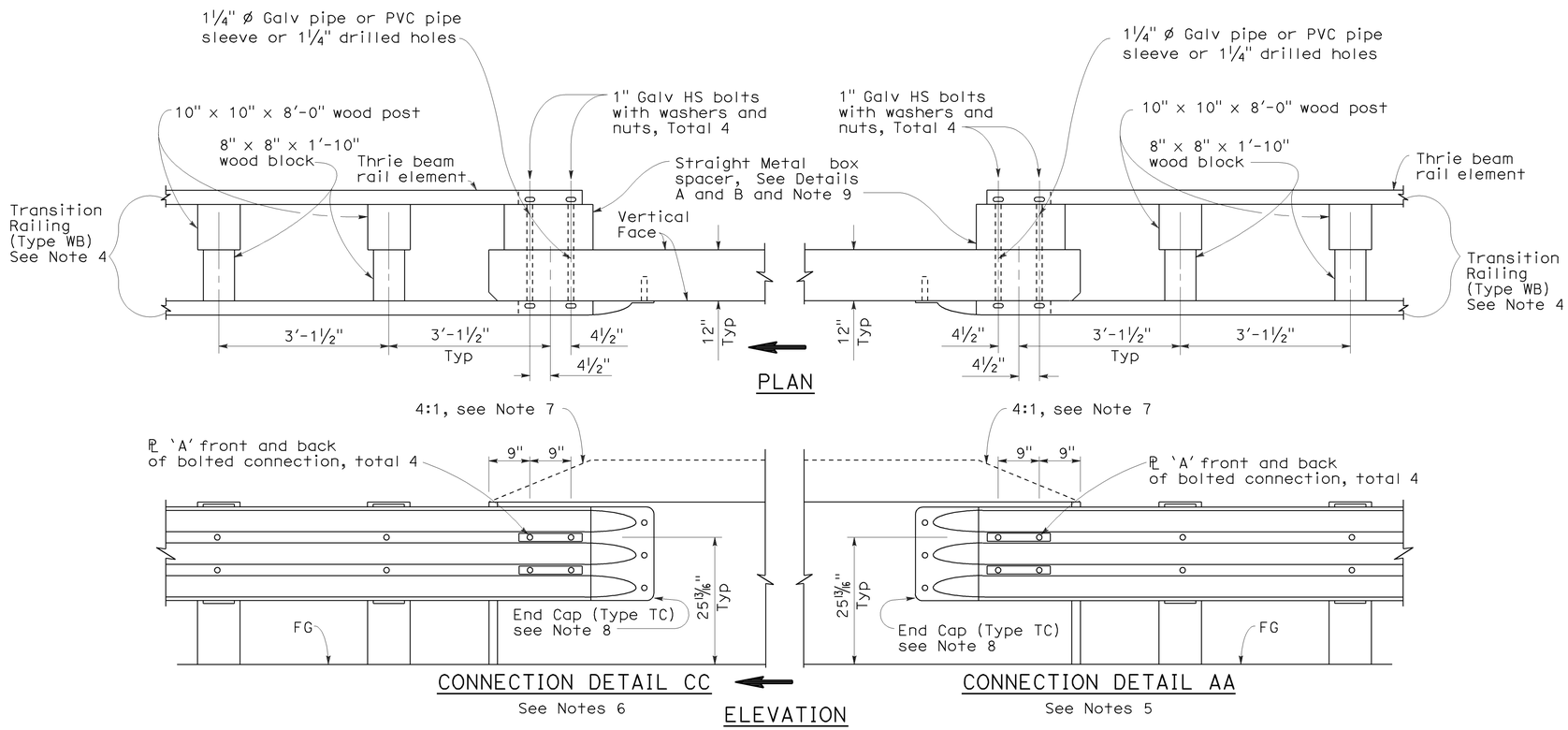

GUARD RAILING CONNECTION TO BRIDGE RAILING WITHOUT SIDEWALK

NOTES:

1. See Revised Standard Plan RSP A77J1 for additional connection details to bridges without sidewalks.
2. Additional details of posts, blocks and hardware are shown on Standard Plan A77B1, A77C1 and A77C2.
3. Direction of adjacent traffic indicated by ⟹.
4. For additional details of Transition Railing (Type WB), see Standard Plan A77J4. Transition Railing (Type WB) transitions the 12 gage w-beam standard railing section of guard railing to a heavier gage nested thrie beam railing section which is connected to the concrete bridge railing.
5. For typical use of Connection Detail AA, see Layout Types 12A and 12B on Revised Standard Plan RSP A77F1, Layout Types 12C and 12D on Standard Plan A77F2, and Layout Type 12E on Revised Standard Plan RSP A77F3.
6. For typical use of Connection Detail CC, see Layout Types 12AA and 12BB on Standard Plan A77F4 and Layout Type 12CC on Standard Plan A77F5.
7. Where the height of the bridge railing exceeds the height of the thrie beam railing by more than 1" at Connection Detail AA and connection Detail CC, taper the top of the end of the bridge railing at 4:1 to match the top elevation of the thrie beam railing.
8. For details of End Cap (Type TC), see Standard Plans A77J4.
9. See Standard Plans A77J4 for additional details regarding depth dimension for straight metal box spacer.

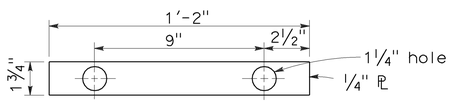

PLATE 'A'

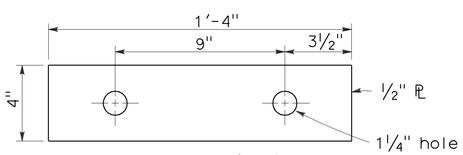

PLATE 'B'
(For backside of connection BB)

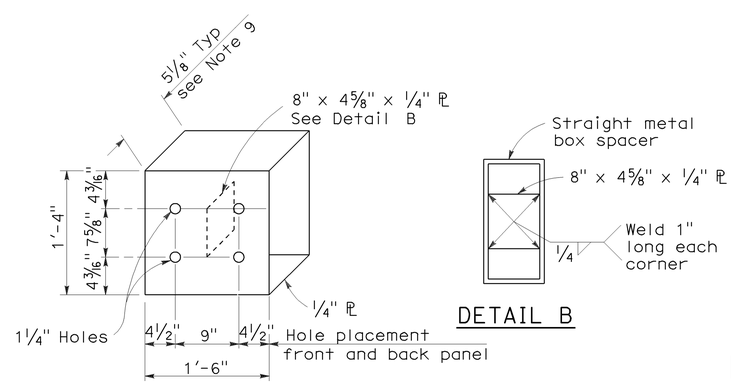

DETAIL A

DETAIL B

STRAIGHT METAL BOX SPACER

STATE OF CALIFORNIA
DEPARTMENT OF TRANSPORTATION

METAL BEAM GUARD RAILING CONNECTIONS TO BRIDGE RAILINGS WITHOUT SIDEWALKS DETAILS No.2

NO SCALE

RSP A77J2 DATED JUNE 6, 2008 SUPERSEDES STANDARD PLAN A77J2 DATED MAY 1, 2006 - PAGE 73 OF THE STANDARD PLANS BOOK DATED MAY 2006.

REVISED STANDARD PLAN RSP A77J2

2006 REVISED STANDARD PLAN RSP A77J2

12-10-07

DIST	COUNTY	ROUTE	POST MILES TOTAL PROJECT	SHEET NO.	TOTAL SHEETS
03	Sac	50	R0.6/17.4	154	233

Randell D. Hiatt
REGISTERED CIVIL ENGINEER

June 5, 2009
PLANS APPROVAL DATE

REGISTERED PROFESSIONAL ENGINEER
Randell D. Hiatt
No. C50200
Exp. 6-30-09
CIVIL
STATE OF CALIFORNIA

The State of California or its officers or agents shall not be responsible for the accuracy or completeness of electronic copies of this plan sheet.

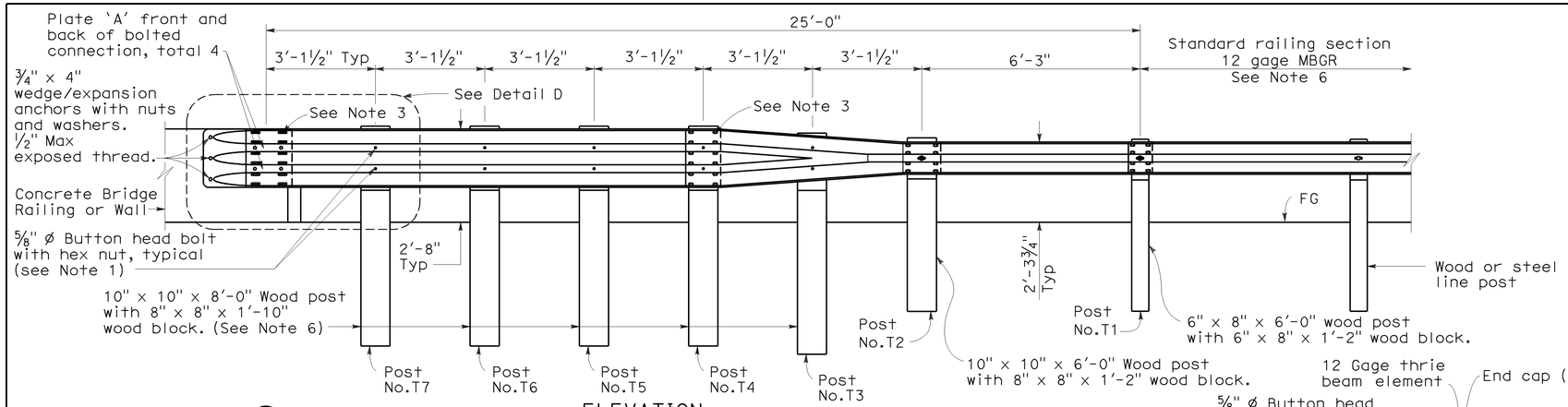

ELEVATION

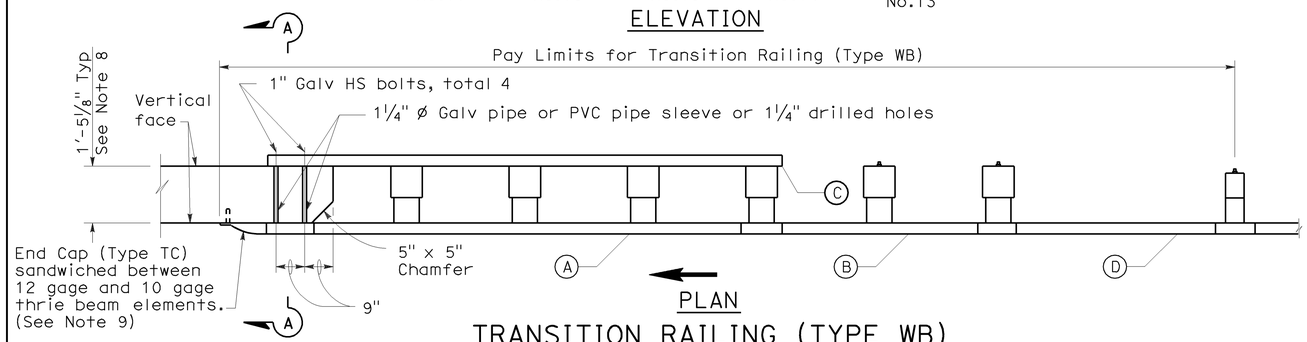

PLAN

TRANSITION RAILING (TYPE WB)

(No Blockout Attachment)

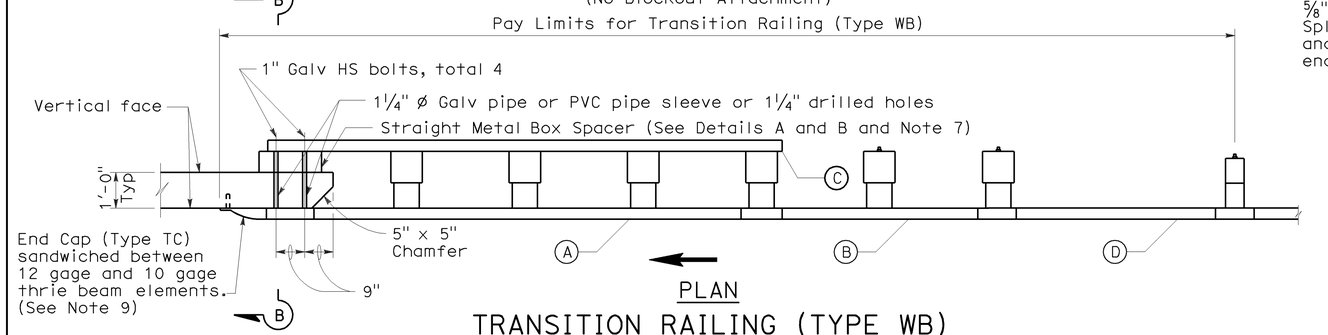

PLAN

TRANSITION RAILING (TYPE WB)

(Blockout Attachment)

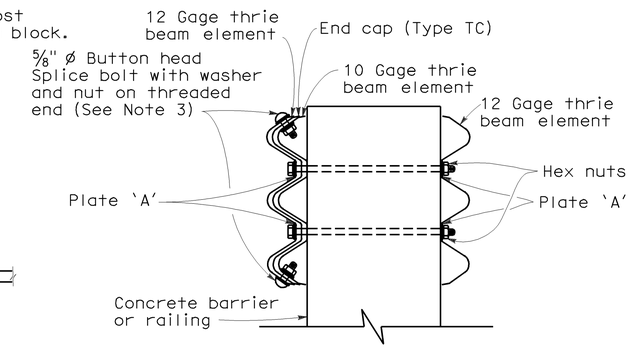

SECTION A-A

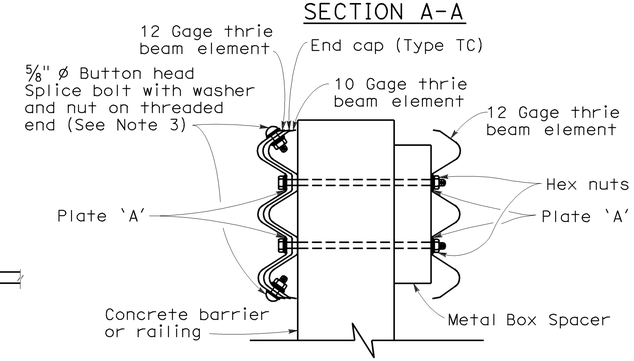

SECTION B-B

NOTES:

To accompany plans dated 1-4-10

1. Use 5/8 " ø Button head bolts and hex nuts for connections to posts. No washer on rail face for bolted connections to post.
2. The nested rail elements, end cap, and 'W' beam to thrie beam element may be spliced together prior to bolting the elements to the wood post and concrete barrier or railing.
3. Exterior splice bolt holes for rail element splices at Post No.T4 and the connection to the concrete barrier or railing shall be the standard 29/32 " x 1 1/8 " slot size. Interior splice bolt holes at these locations may be increased up to 1 1/4 " ø. Only the top 2 and the bottom 2 splice bolts with washers and nuts are required for rail splices at Post No.T4 and the connection to the concrete barrier or railing.
4. Direction of adjacent traffic indicated by →.
5. The top elevation of Post Nos.T2 through T7 shall not project more than 1" above the top elevation of the rail element.
6. Typically, the railing connected to Transition Railing (Type WB) will be either standard railing section of metal beam guard railing or an approved Caltrans end treatment attached to Post No.T1.
7. The depth of the metal box spacer varies from the 5 1/8 " to 1 1/2 " and is dependent on the width of the concrete railing or wall. The combined dimension for the depth of the metal box spacer plus the width of railing or wall is typically 17 1/8 ". Where the space between the backside of the concrete railing or wall and the rear thrie beam element is less than 1 1/2 ", metal plates similar to Plate 'A' are to be used as spacers.
8. Where the width of the concrete railing or wall is greater than 17 1/8 ", wood blocks are to be used to fill the space created between the backside of Posts No.4 through No.7 and the rear thrie beam element. These wood blocks shall be 8" in width and 1'-2" in length. The dimension between the front thrie beam element and the rear thrie beam element is to match the width of the concrete railing or wall.
9. End cap may be installed over 12 gage and 10 gage thrie beam elements where transition railing is installed on the departure end of bridge railing.

LEGEND

(A) Nested thrie beam elements (one 12 gage element nested over one 10 gage element).

(B) One 10 gage "W" beam to thrie beam element.

(C) One 12 gage thrie beam element.

(D) One 10 gage "W" beam rail element (7'-3½" length)

10 gage = 0.135" thick

12 gage = 0.108" thick

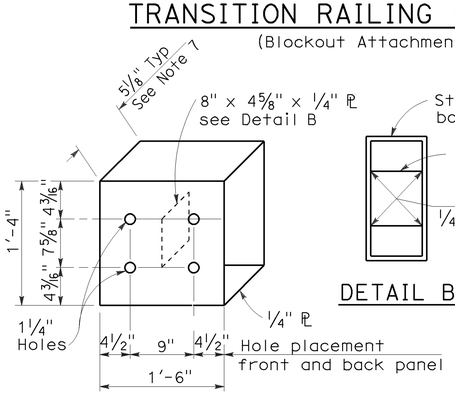

DETAIL A

STRAIGHT METAL BOX SPACER

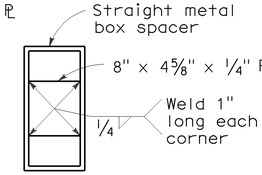

DETAIL B

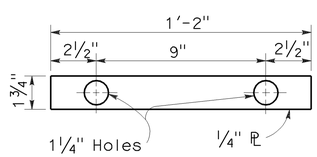

DETAIL C

PLATE 'A'

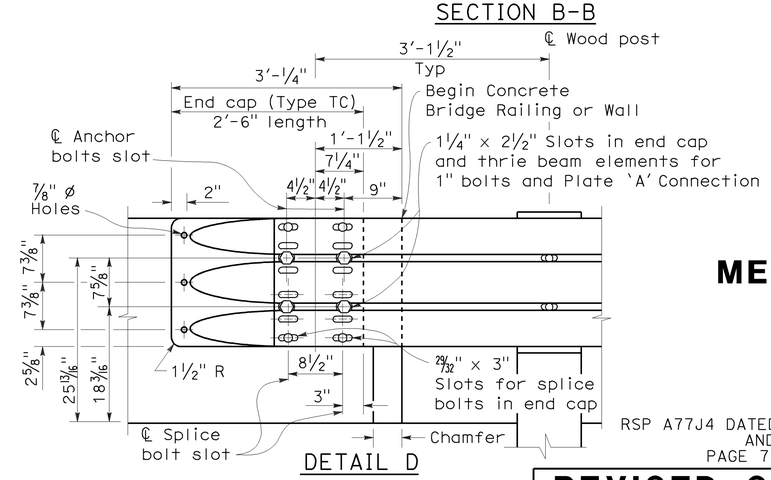

DETAIL D

STATE OF CALIFORNIA
DEPARTMENT OF TRANSPORTATION

METAL BEAM GUARD RAILING TRANSITION RAILING (TYPE WB)

NO SCALE

RSP A77J4 DATED JUNE 5, 2009 SUPERSEDES RSP A77J4 DATED JUNE 6, 2008 AND STANDARD PLAN A77J4 DATED MAY 1, 2006 - PAGE 75 OF THE STANDARD PLANS BOOK DATED MAY 2006.

REVISED STANDARD PLAN RSP A77J4

2006 REVISED STANDARD PLAN RSP A77J4

5-14-09

DIST	COUNTY	ROUTE	POST MILES TOTAL PROJECT	SHEET NO.	TOTAL SHEETS
03	Sac	50	R0.6/17.4	155	233

REGISTERED CIVIL ENGINEER

June 5, 2009
PLANS APPROVAL DATE

REGISTERED PROFESSIONAL ENGINEER Glenn DeCou No. C34547 Exp. 9-30-09 CIVIL STATE OF CALIFORNIA

The State of California or its officers or agents shall not be responsible for the accuracy or completeness of electronic copies of this plan sheet.

To accompany plans dated 1-4-10

2006 REVISED STANDARD PLAN RSP A85

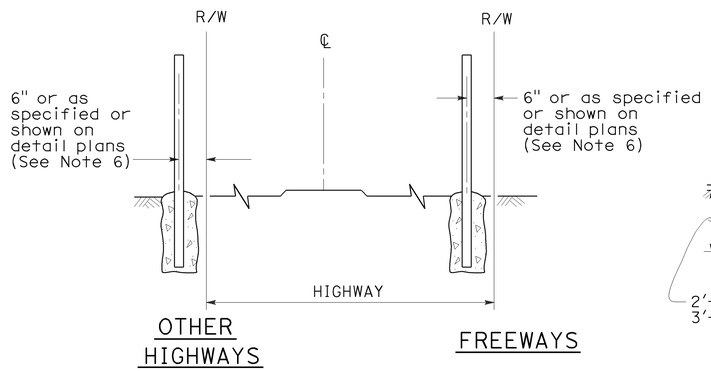

FENCE LOCATION

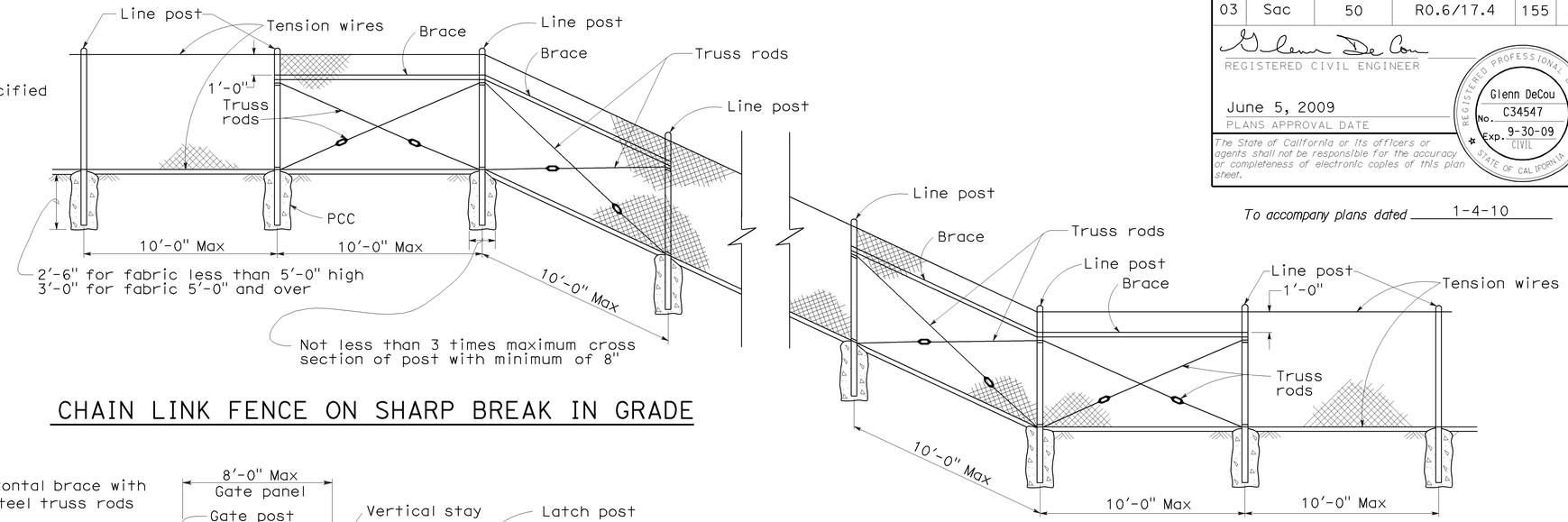

CHAIN LINK FENCE ON SHARP BREAK IN GRADE

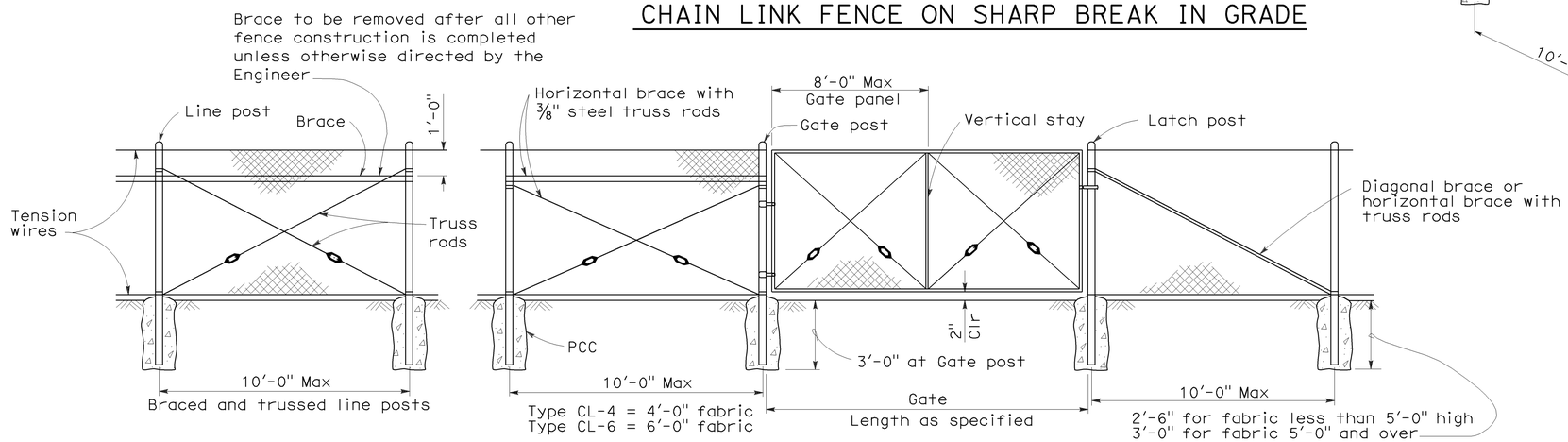

CHAIN LINK GATE INSTALLATION

GATE POST			
FENCE HEIGHT	GATE WIDTHS	NOMINAL ID	WEIGHT PER FOOT
6'-0" and Less	Up thru 6'-0"	2½"	4.95 LB
	Over 6'-0" thru 12'-0"	4"	10.79 LB
	Over 12'-0" thru 18'-0"	5"	14.62 LB
	Over 18'-0" to 24'-0" Max	6"	18.97 LB
Over 6'-0"	Up thru 6'-0"	3"	7.58 LB
	Over 6'-0" thru 12'-0"	5"	14.62 LB
	Over 12'-0" thru 18'-0"	6"	18.97 LB
	Over 18'-0" to 24'-0" Max	8"	28.55 LB

Above post dimensions and weights are minimums. Larger sizes may be used on approval of the Engineer.

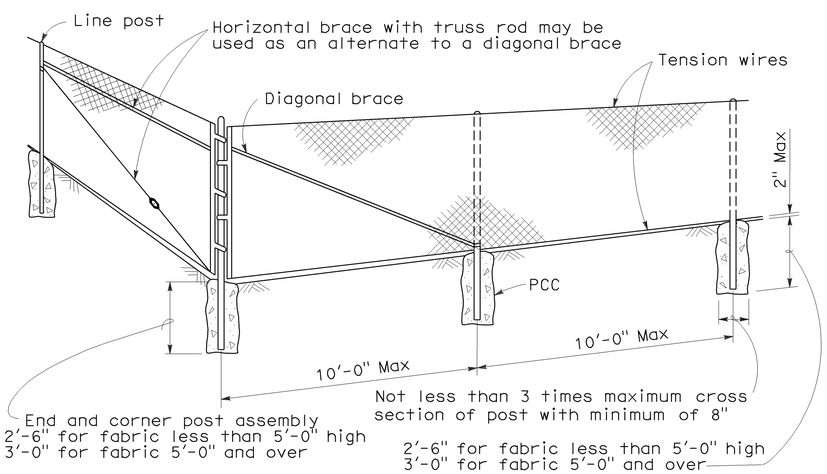

CORNER POST

NOTES:

1. The below table shows examples of post and brace sections which may comply with the Specifications.
2. Sections shown in the tables must also comply with the strength requirements and other provisions of the Specifications.
3. Other sections which comply with the strength requirements and other provisions of the Specifications may be used on approval of the Engineer.
4. Options exercised shall be uniform on any one project.
5. Dimensions shown are nominal.
6. Offset to be 2'-0" at monument locations, measured at right angles to R/W lines. Taper to achieve offset to be at least 20'-0" long.

TYPICAL MEMBER DIMENSIONS (See Notes)											
FENCE HEIGHT	LINE POSTS			END, LATCH & CORNER POSTS				BRACES			
	ROUND ID	H	ROLL FORMED	ROUND ID	ROLL FORMED			ROUND ID	H	ROLL FORMED	
6' & less	1½"	1⅞" × 1⅝"	1⅞" × 1⅝"	2"	3½" × 3½"	2" × 1¾"		1¼"	1½" × 1 5/16"	1⅝" × 1¼"	1¾" × 1¼"
Over 6'	2"	2¼" × 2"	2" × 1¾"	2½"	3½" × 3½"	2½" × 2½"		1¼"	1½" × 1 5/16"	1⅝" × 1¼"	1¾" × 1¼"

STATE OF CALIFORNIA
DEPARTMENT OF TRANSPORTATION

CHAIN LINK FENCE

NO SCALE

RSP A85 DATED JUNE 5, 2009 SUPERSEDES STANDARD PLAN A85
DATED MAY 1, 2006 - PAGE 111 OF THE STANDARD PLANS BOOK DATED MAY 2006.

REVISED STANDARD PLAN RSP A85

5-7-09

DIST	COUNTY	ROUTE	POST MILES TOTAL PROJECT	SHEET NO.	TOTAL SHEETS
03	Sac	50	R0.6/17.4	156	233

REGISTERED CIVIL ENGINEER

November 17, 2006
PLANS APPROVAL DATE

REGISTERED PROFESSIONAL ENGINEER Michael Janzen No. 44788 Exp. 03-31-08 CIVIL STATE OF CALIFORNIA

The State of California or its officers or agents shall not be responsible for the accuracy or completeness of electronic copies of this plan sheet.

To accompany plans dated 1-4-10

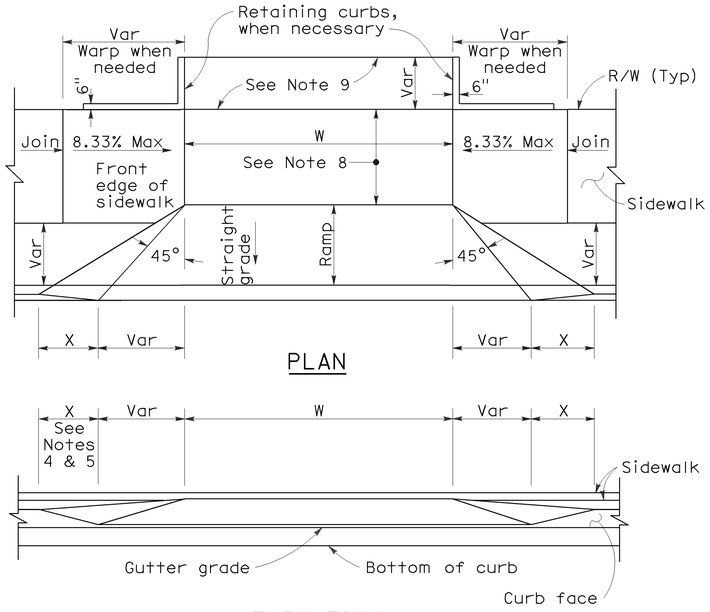

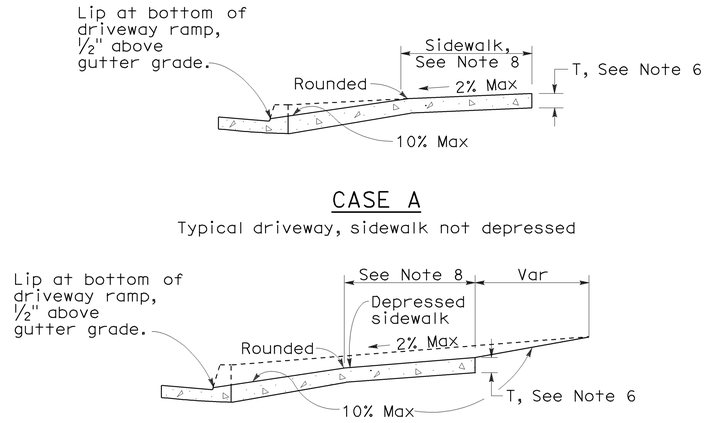

CURB QUANTITIES

TYPE	CUBIC YARDS PER LINEAR FOOT
A1-6	0.02585
A1-8	0.03084
A2-6	0.05903
A2-8	0.06379
A3-6	0.01036
A3-8	0.01435
B1-4	0.02185
B1-6	0.02930
B2-4	0.05515
B2-6	0.06171
B3-4	0.00641
B3-6	0.01074
B4	0.05709
D-4	0.04083
D-6	0.06804
E	0.06661

TABLE A

CURB TYPE	DIMENSIONS "H1"	"H2"	"W1"	"W2"
A1-6	1'-2"	6"	7½"	1½"
A1-8	1'-4"	8"	8"	2"
A2-6	1'-0"	6"	2'-7½"	1½"
A2-8	1'-2"	8"	2'-8"	2"
A3-6	6"	5"	7¼"	1¼"
A3-8	8"	7"	7¾"	1¾"
B1-4	1'-0"	4"	7½"	2½"
B1-6	1'-2"	6"	9"	4"
B2-4	10"	4"	2'-7½"	2½"
B2-6	1'-0"	6"	2'-9"	4"
B3-4	4"	3"	7"	2"
B3-6	6"	5"	8½"	3½"
D-4	10"	4"	1'-6"	1'-1"
D-6	1'-0"	6"	2'-2"	1'-8"

DRIVEWAYS

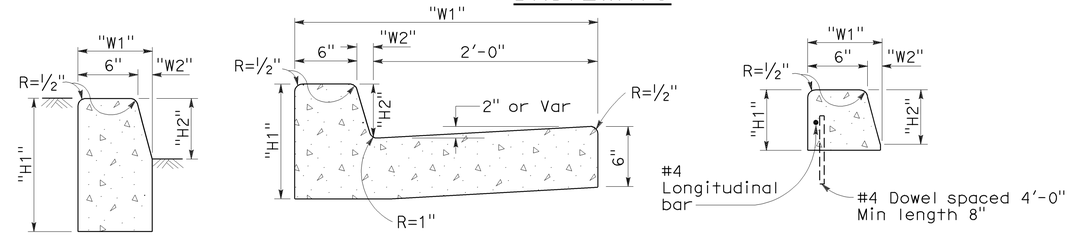

TYPE A1 CURBS
See Table A

TYPE A2 CURBS
See Table A

TYPE A3 CURBS
Superimposed on existing pavement
See Table A

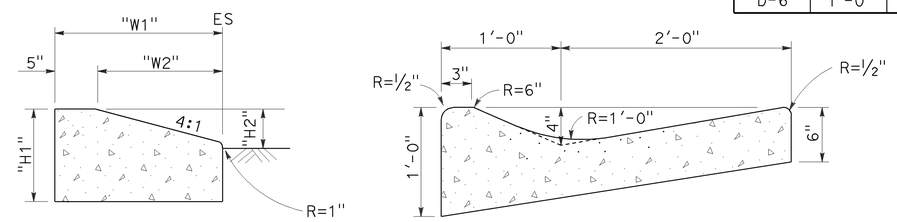

TYPE D CURBS
See Table A

TYPE E CURB

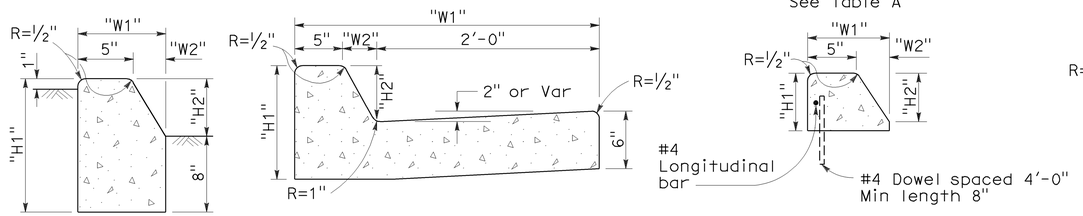

TYPE B1 CURBS
See Table A

TYPE B2 CURBS
See Table A

TYPE B3 CURBS
Superimposed on existing pavement
See Table A

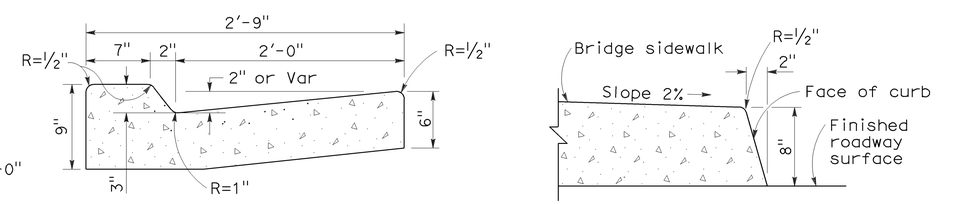

TYPE B4 CURBS

TYPE H CURB
On Bridges

CURBS

NOTES:

1. Case A driveway section typically applies.
2. Use Case B driveway section when ramp slopes would exceed 10% in Case A.
3. Use Case B driveway section when sidewalk cross slope would exceed 2% in Case A.
4. X=3'-0" except for curb heights over 10" where 4:1 slopes shall be used on curb slope.
5. X is a variable when sidewalk is located where wheelchairs may traverse the surface. Slopes shall not exceed 8.33%.
6. Sidewalk and ramp thickness "T" at driveway shall be 4" for residental and 6" for commercial.
7. Difference in slope of the driveway ramp and the slope of a line between the gutter and a point on the roadway 5'-0" from gutter line shall not exceed 15%. Reduce driveway ramp slope, not gutter slope, where required.
8. Minimum width of clear passageway for sidewalk shall be 4'-0".
9. Retaining curbs and acquisition of construction easement may be necessary for narrow sidewalks or curb heights in excess of 6".
10. Across the pedestrian route at curb ramp locations, the gutter pan slope shall not exceed 1" of depth for each 2'-0" of width.

STATE OF CALIFORNIA
DEPARTMENT OF TRANSPORTATION

CURBS AND DRIVEWAYS

NO SCALE

RSP A87A DATED NOVEMBER 17, 2006 SUPERSEDES STANDARD PLAN A87A DATED MAY 1, 2006 - PAGE 113 OF THE STANDARD PLANS BOOK DATED MAY 2006.

REVISED STANDARD PLAN RSP A87A

2006 REVISED STANDARD PLAN RSP A87A

10-25-06

DIST	COUNTY	ROUTE	POST MILES TOTAL PROJECT	SHEET NO.	TOTAL SHEETS
03	Sac	50	R0.6/17.4	157	233

REGISTERED CIVIL ENGINEER

September 1, 2006
PLANS APPROVAL DATE

REGISTERED PROFESSIONAL ENGINEER — Hector David Cordova — No. C41957 — Exp. 3-31-08 — CIVIL — STATE OF CALIFORNIA

The State of California or its officers or agents shall not be responsible for the accuracy or completeness of electronic copies of this plan sheet.

To accompany plans dated 1-4-10

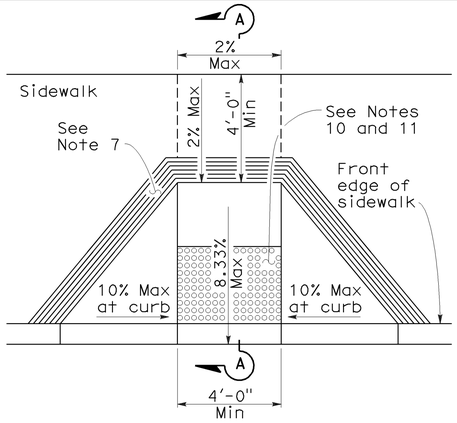

CASE A

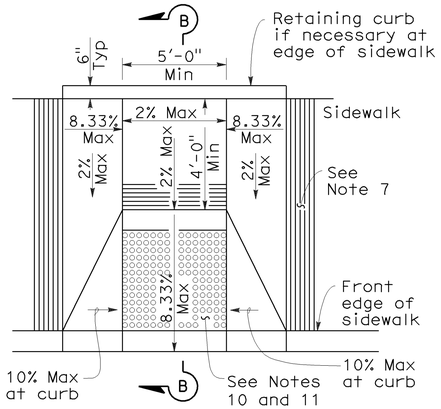

CASE B

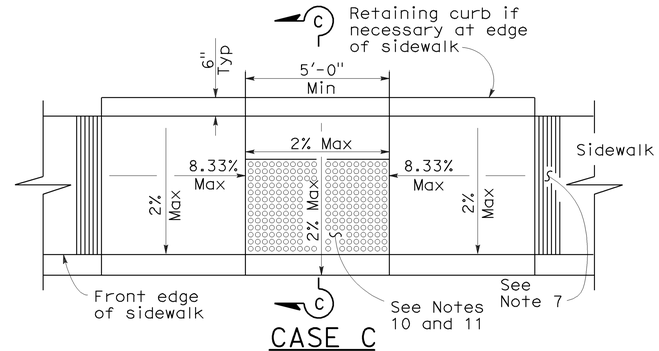

CASE C

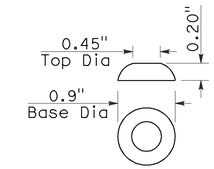

RAISED TRUNCATED DOME

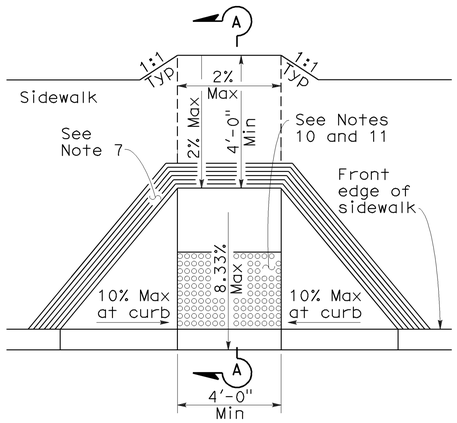

CASE D

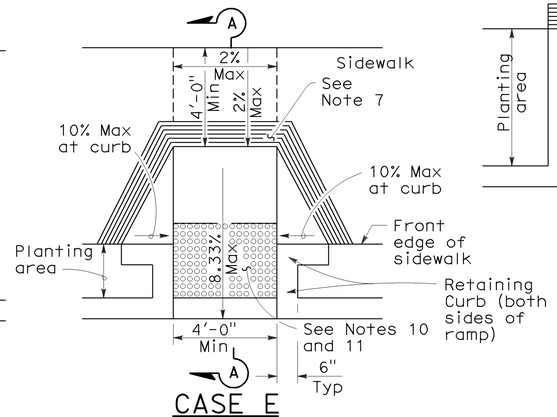

CASE E

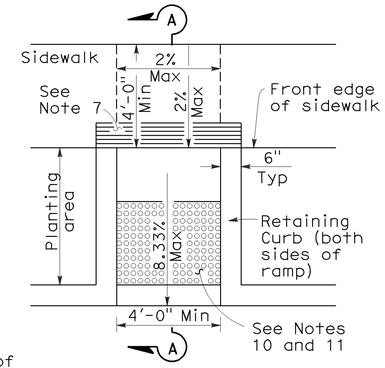

CASE F

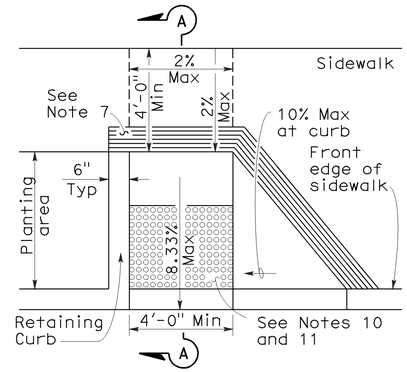

CASE G

See Note 4

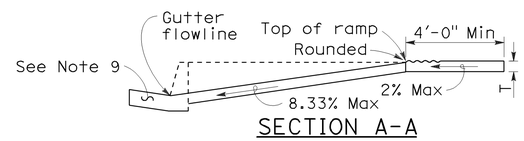

SECTION A-A

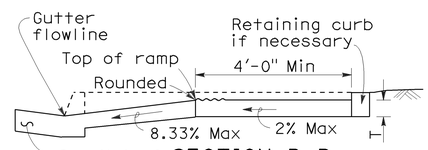

SECTION B-B

Depress entire sidewalk as required

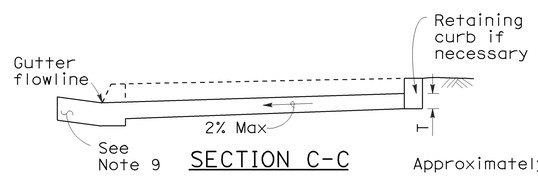

SECTION C-C

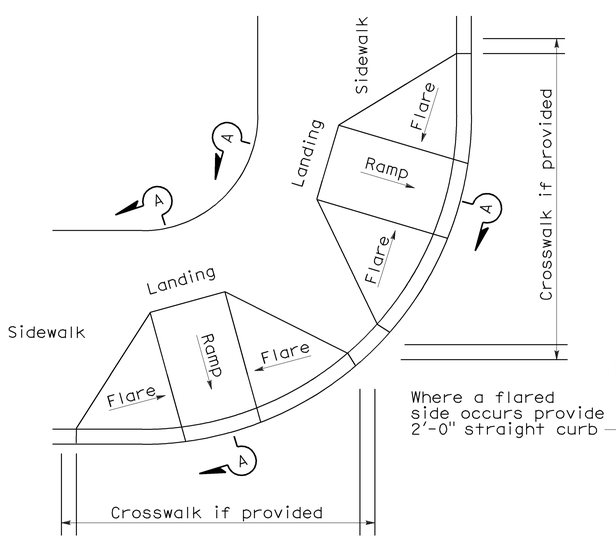

DETAIL A

TYPICAL TWO-RAMP CORNER INSTALLATION

See Note 1

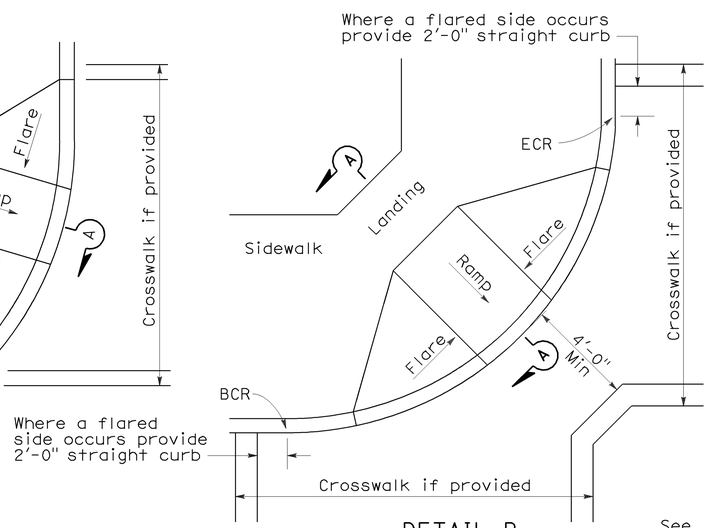

DETAIL B

TYPICAL ONE-RAMP CORNER INSTALLATION

See Notes 1 and 3

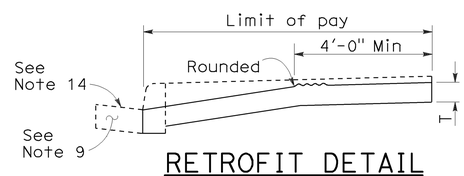

RETROFIT DETAIL

Existing curb and sidewalk

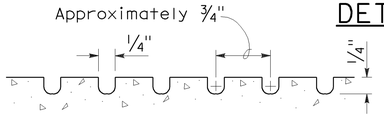

GROOVING DETAIL

NOTES:

1. As site conditions dictate, Case A through Case G curb ramps may be used for corner installations similar to those shown in Detail A and Detail B. The case of curb ramps used in Detail A do not have to be the same. Case A through Case G curb ramps also may be used at mid block locations, as site conditions dictate.
2. If distance from curb to back of sidewalk is too short to accommodate ramp and 4'-0" platform (landing) as shown in Case A, the sidewalk may be depressed longitudinally as in Case B, or C or may be widened as in Case D.
3. When ramp is located in center of curb return, crosswalk configuration must be similar to that shown for Detail B.
4. As site conditions dictate, the retaining curb side and the flared side of the Case G ramp shall be constructed in reversed position.
5. If located on a curve, the sides of the ramp need not be parallel, but the minimum width of the ramp shall be 4'-0".
6. Side slope of ramp flares vary uniformly from a maximum of 10% at curb to conform with longitudinal sidewalk slope adjacent to top of the ramp, except in Case C and Case F.
7. The curb ramp shall be outlined, as shown, with a 1'-0" wide border with 1/4" grooves approximately 3/4" on center. See grooving detail.
8. Transitions from ramps and landing to walks, gutters or streets shall be flush and free of abrupt changes.
9. Maximum slopes of adjoining gutters, the road surface immediately adjacent to the curb ramp or accessible route shall not exceed 5 percent within 4'-0" of the top and bottom of the curb ramp.
10. Curb ramps shall have a detectable warning surface that extends the full width and 3'-0" depth of the ramp. Detectable Warning Surfaces shall conform to the details on this plan and the requirements in the Special Provisions.
11. The edge of the detectable warning surface nearest the street shall be between 6" and 8" from the gutter flowline.
12. Sidewalk and ramp thickness, "T", shall be 3 1/2" minimum.
13. Utility pull boxes, manholes, vaults and all other utility facilities within the boundaries of the curb ramp will be relocated or adjusted to grade by the owner prior to, or in conjunction with, curb ramp construction.
14. For retrofit conditions, removal and replacement of curb apron will be at the Contractor's option, unless otherwise shown on project plans.

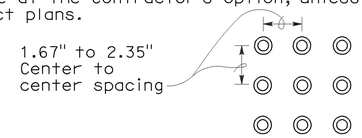

RAISED TRUNCATED DOME PATTERN (IN-LINE)

DETECTABLE WARNING SURFACE

See Note 10

STATE OF CALIFORNIA
DEPARTMENT OF TRANSPORTATION

CURB RAMP DETAILS

NO SCALE

RSP A88A DATED SEPTEMBER 1, 2006 SUPERSEDES STANDARD PLAN A88A DATED MAY 1, 2006 - PAGE 115 OF THE STANDARD PLANS BOOK DATED MAY 2006.

REVISED STANDARD PLAN RSP A88A

2006 REVISED STANDARD PLAN RSP A88A

8-3-06

DIST	COUNTY	ROUTE	POST MILES TOTAL PROJECT	SHEET NO.	TOTAL SHEETS
03	Sac	50	R0.6/17.4	158	233

LICENSED LANDSCAPE ARCHITECT

April 3, 2009
PLANS APPROVAL DATE

The State of California or its officers or agents shall not be responsible for the accuracy or completeness of electronic copies of this plan sheet.

LICENSED LANDSCAPE ARCHITECT — Robert B. Schott — Signature — 11-30-10 Renewal date — 2-25-09 Date — STATE OF CALIFORNIA

To accompany plans dated 1-4-10

2006 NEW STANDARD PLAN NSP D71

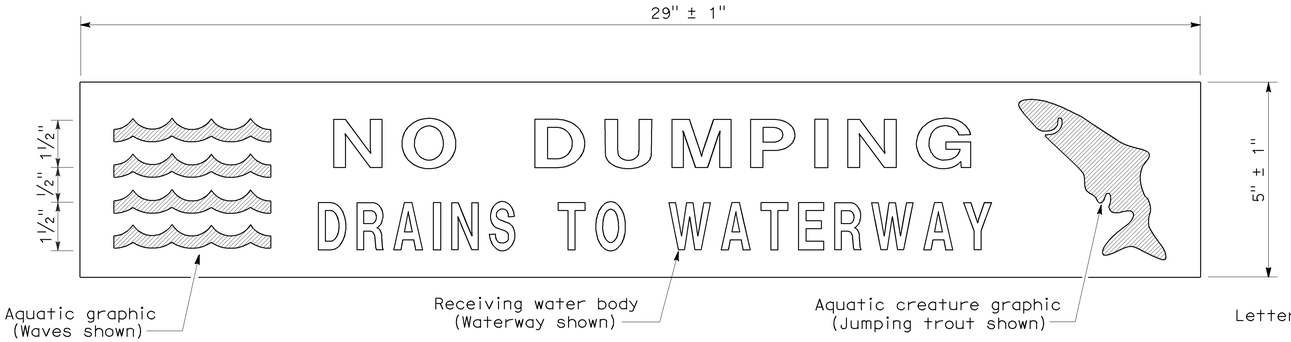

PLAN
DRAINAGE INLET MARKER
(PREFABRICATED THERMOPLASTIC)

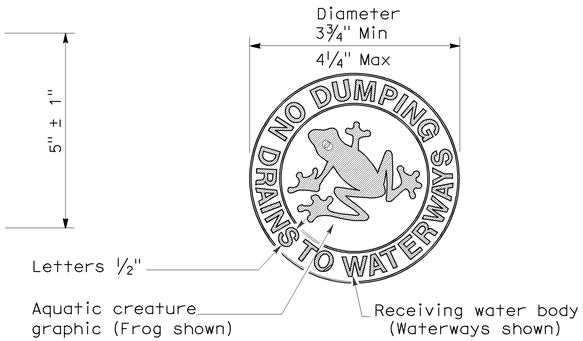

PLAN
DRAINAGE INLET MARKER
(MEDALLION)

PLAN
DRAINAGE INLET MARKER
(STAMPED CONCRETE IMPRINT)

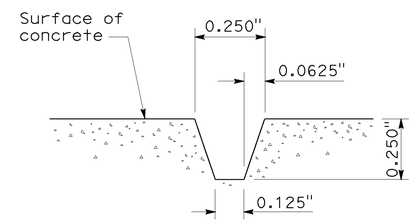

SECTION A-A
STAMPED CONCRETE
IMPRINT DETAIL

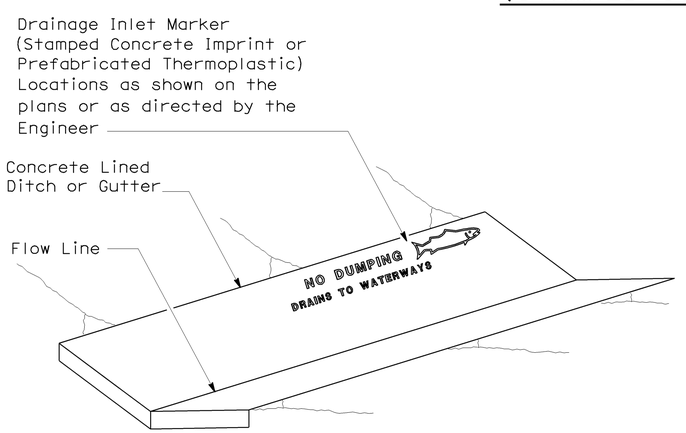

PERSPECTIVE
DRAINAGE INLET MARKER ON
CONCRETE LINED DITCH

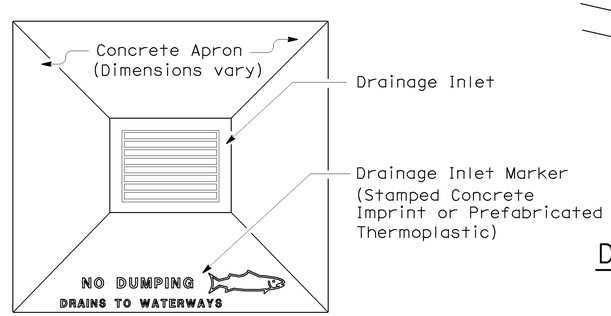

PLAN
DRAINAGE INLET MARKER ON
DRAINAGE INLET APRON

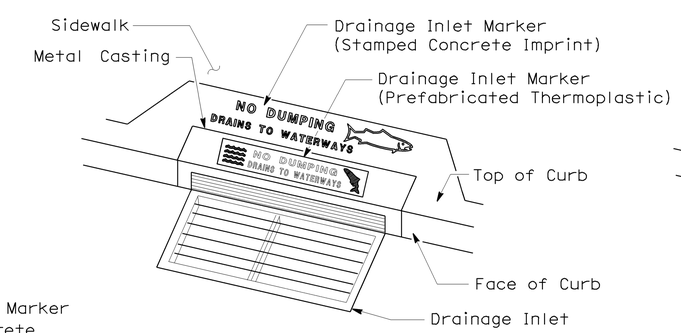

PERSPECTIVE
DRAINAGE INLET MARKER ON
DRAINAGE INLET

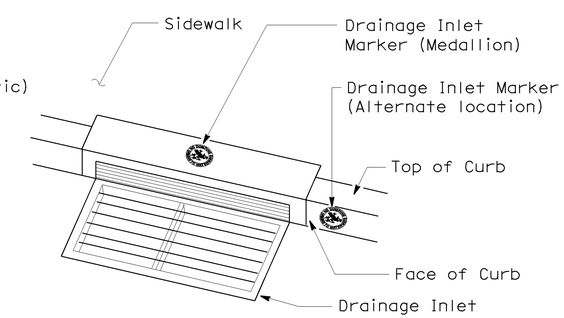

PERSPECTIVE
DRAINAGE INLET MARKER (MEDALLION)
ON DRAINAGE INLET

STATE OF CALIFORNIA
DEPARTMENT OF TRANSPORTATION

DRAINAGE INLET MARKERS

NO SCALE

NSP D71 DATED APRIL 3, 2009 SUPPLEMENTS
THE STANDARD PLANS BOOK DATED MAY 2006.

NEW STANDARD PLAN NSP D71

7-24-08

DIST	COUNTY	ROUTE	POST MILES TOTAL PROJECT	SHEET NO.	TOTAL SHEETS
03	Sac	50	R0.6/17.4	159	233

Raymond Don Tsztoo
REGISTERED CIVIL ENGINEER

January 18, 2008
PLANS APPROVAL DATE

REGISTERED PROFESSIONAL ENGINEER
Raymond Don Tsztoo
No. C37332
Exp. 6-30-08
CIVIL
STATE OF CALIFORNIA

The State of California or its officers or agents shall not be responsible for the accuracy or completeness of electronic copies of this plan sheet.

To accompany plans dated 1-4-10

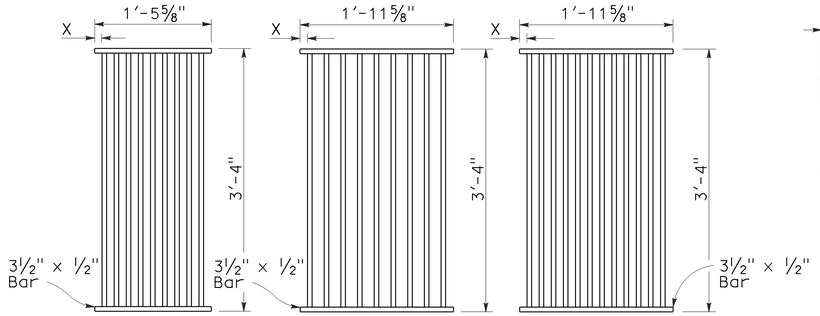

TYPE 18-9

1⅜" Clear spacing. Use within the roadbed on highways where bicycles and pedestrians are excluded.

TYPE 24-9

2" Clear spacing. Use in locations off the roadbed on all types of highways.

TYPE 24-12

1⅜" Clear spacing. Use within the roadbed on highways where bicycles and pedestrians are excluded.

RECTANGULAR GRATE DETAILS

(See table below)

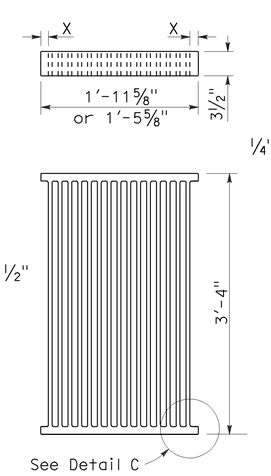

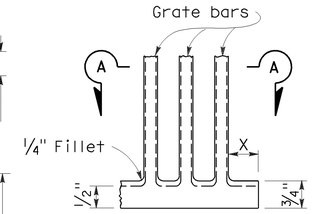

DETAIL C

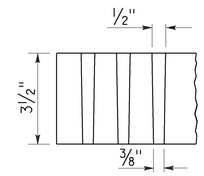

SECTION A-A

ALTERNATIVE CAST NODULAR IRON GRATE OR CAST STEEL GRATE

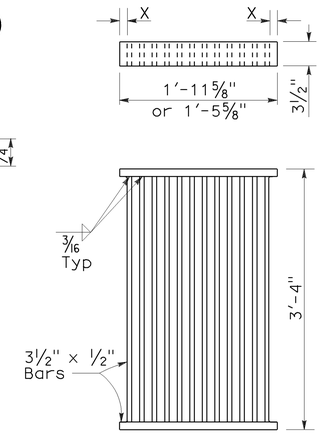

ALTERNATIVE WELDED GRATE

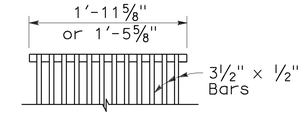

CAST END BLOCK

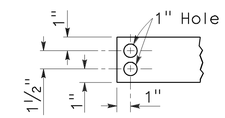

END OF BAR

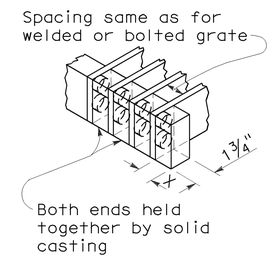

ALTERNATIVE CAST NODULAR IRON OR CAST STEEL END BLOCK GRATE

NOTES:

1. Grate type numbers refer to approximate width of grate in inches and number of bars, respectively.
2. Contractor has the option of using cast nodular iron, cast steel, welded, bolted, or cast end block grate.
3. See Special Provisions for requirements pertaining to galvanizing or asphalt dipping of grates and frames.
4. Rounded top of bars optional on all grates.
5. Pipe inlets with a grate shall be placed so that bars parallel direction of principle surface flow.
6. Full penetration butt welds may be substituted for the fillet welds on all anchors.
7. Standard square, hexagon, round or equivalent headed anchors may be substituted for the right angle hooks on the anchors shown on this plan.
8. Grate and frame weights are based on welded grates (weights of face angles, steps, protection bars, etc. are not included).

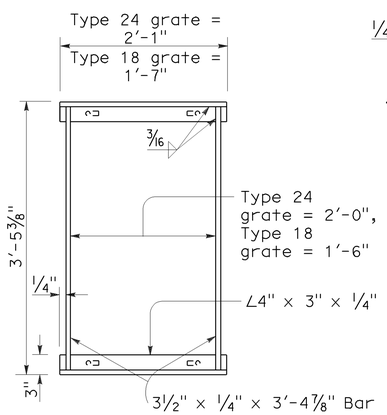

TYPICAL FRAME

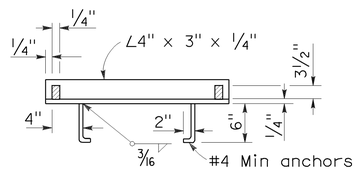

CROSS SECTION

(Thru frame)

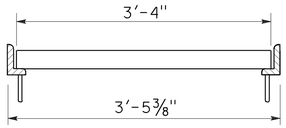

LONGITUDINAL SECTION

(Thru frame and grate)

RECTANGULAR FRAME DETAILS

(For all rectangular grates)

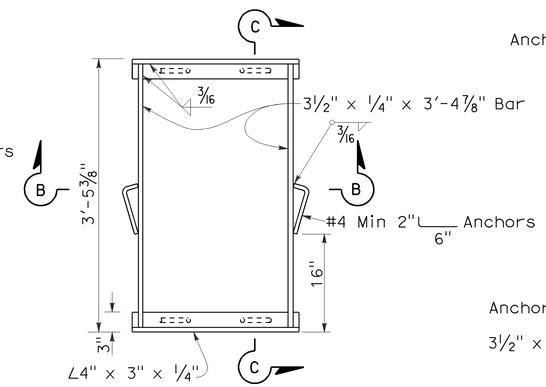

TYPICAL FRAME

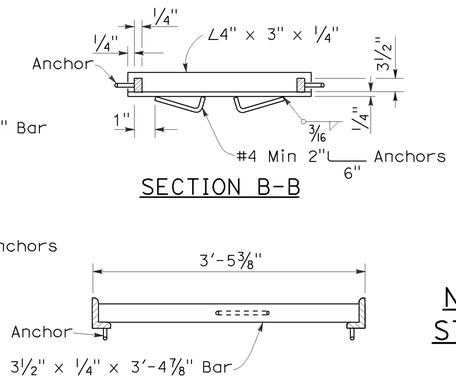

SECTION B-B

SECTION C-C

ALTERNATIVE ANCHOR FOR RECTANGULAR FRAME

(For details not shown, See Rectangular Frame Details)

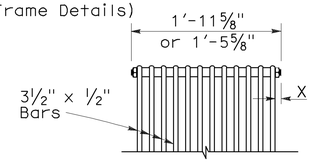

BOLTED END BLOCK

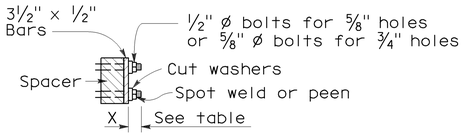

BOLTING DETAIL

ALTERNATIVE BOLTED GRATE

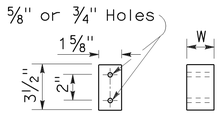

BAR SPACER

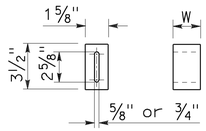

ALTERNATIVE SPACER

W = 1⅜" or 2"

GRATE BAR SPACING TABLE

TYPE	No. OF BARS	CLEAR BAR SPACING	X
18-9	9	1⅜"	1 1/16"
24-9	9	2"	1 9/16"
24-12	12	1⅜"	1¼"

INLET TYPE	COVER TYPE	WEIGHT LB
OS	PLATE	174
OL-7	PLATE	170
OL-10	PLATE	170
OL-14	PLATE	170
OL-21	PLATE	170
OCP	PLATE	112
OCPI	PLATE	112
OCPI	REDWOOD	42
OMP	PLATE	177
OMPI	PLATE	177

INLET TYPE	GRATE TYPE	No. OF GRATES	WEIGHT LB
GDO	24-12	2	634
GOL-7	24-12	1	326
GOL-10	24-12	1	326
GO,G1,G2,G3,G4 (TYPE 24)	24-9	1	263
	24-12	1	326
G4 (TYPE 18),G5,G6	18-9	1	249
GT1	18-9	2	498
GT2	18-9	2	498
GT3	24-12	2	652
GT4	24-12	2	652
TRASH RACK			22

BASIS FOR MISC IRON & STEEL FINAL PAY WEIGHTS FOR DRAINAGE INLETS

(See General Notes, No 8)

STATE OF CALIFORNIA
DEPARTMENT OF TRANSPORTATION

GRATE DETAILS

NO SCALE

RSP D77A DATED JANUARY 18, 2008 SUPERSEDES STANDARD PLAN D77A
DATED MAY 1, 2006 - PAGE 155 OF THE STANDARD PLANS BOOK DATED MAY 2006.

REVISED STANDARD PLAN RSP D77A

2006 REVISED STANDARD PLAN RSP D77A

12-14-07

DIST	COUNTY	ROUTE	POST MILES TOTAL PROJECT	SHEET NO.	TOTAL SHEETS
03	Sac	50	R0.6/17.4	160	233

Raymond Don Tsztoo
REGISTERED CIVIL ENGINEER

June 6, 2008
PLANS APPROVAL DATE

REGISTERED PROFESSIONAL ENGINEER
Raymond Don Tsztoo
No. C37332
Exp. 6-30-08
CIVIL
STATE OF CALIFORNIA

The State of California or its officers or agents shall not be responsible for the accuracy or completeness of electronic copies of this plan sheet.

To accompany plans dated 1-4-10

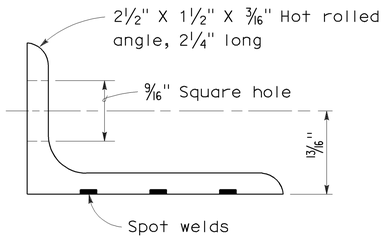

ANGLE

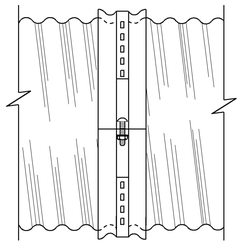

SIDE VIEW
ANGLE

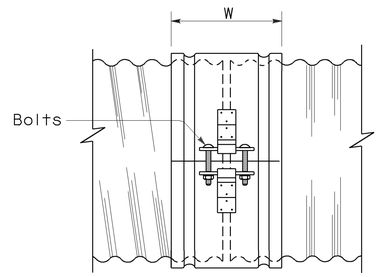

SIDE VIEW
SINGLE BAR AND STRAP

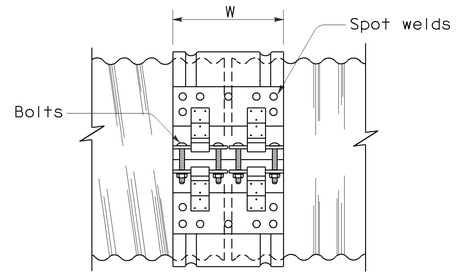

SIDE VIEW
DOUBLE BAR AND STRAP

NOTES:

1. All ferrous metal coupling band connection hardware shall be galvanized or electroplated in accordance with the Standard Specifications.
2. Dimensions and thicknesses shown are minimum.
3. Spot welds shall develop minimum required strength of strap.
4. Fillet welds of equivalent strength may be substituted for spot welds or rivets.
5. Dimension depends upon whether end condition is lips up or lips down.

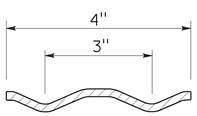

SECTION

H-4 HUGGER BAND

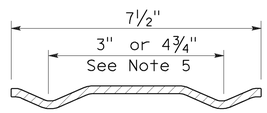

SECTION

H-7 HUGGER BAND

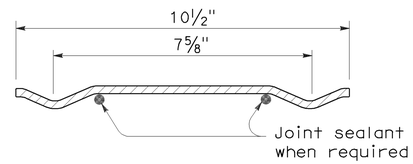

SECTION

H-10 HUGGER BAND

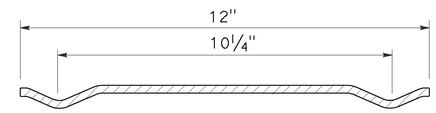

SECTION

H-12 HUGGER BAND

HUGGER COUPLING BANDS

STATE OF CALIFORNIA
DEPARTMENT OF TRANSPORTATION

CORRUGATED METAL PIPE COUPLING DETAILS No. 4 HUGGER COUPLING BANDS

NO SCALE

RSP D97D DATED JUNE 6, 2008 SUPERSEDES STANDARD PLAN D97D
DATED MAY 1, 2006 - PAGE 186 OF THE STANDARD PLANS BOOK DATED MAY 2006.

REVISED STANDARD PLAN RSP D97D

2006 REVISED STANDARD PLAN RSP D97D

3-24-08

DIST	COUNTY	ROUTE	POST MILES TOTAL PROJECT	SHEET NO.	TOTAL SHEETS
03	Sac	50	R0.6/17.4	161	233

Raymond Don Tsztoo
REGISTERED CIVIL ENGINEER

June 6, 2008
PLANS APPROVAL DATE

REGISTERED PROFESSIONAL ENGINEER
Raymond Don Tsztoo
No. C37332
Exp. 6-30-08
CIVIL
STATE OF CALIFORNIA

The State of California or its officers or agents shall not be responsible for the accuracy or completeness of electronic copies of this plan sheet.

ANNULAR AND HELICAL PROFILE

COUPLING TYPE	PIPE CORRUGATION	PIPE SIZE	W OR A	PIPE WALL THICKNESS CSP	PIPE WALL THICKNESS CAP	BAND THICKNESS CSP	BAND THICKNESS CAP	BAR AND STRAP (CSP ONLY) STRAP THICKNESS	BOLTS Dia	BAR Dia	BAR YIELD STRENGTH	ANGLE DIMENSIONS CSP	ANGLE DIMENSIONS CAP	BOLTS (No.- Dia) CSP	BOLTS (No.- Dia) CAP	RIVETS ANGLE TO BAND CSP	RIVETS ANGLE TO BAND CAP	SPOT WELDS ANGLE TO BAND CSP
TWO PIECE INTEGRAL FLANGE	1½′ × ¼"	6"-10"	7"	0.052"-0.079"	0.048"-0.060"	0.052"	0.060"							2-⅜"	2-⅜"			
		12"-18"	7"	0.052"-0.079"		0.064"								2-½"				
	2⅔" × ½"	12"-24"	7"	0.052"-0.079"	0.060"-0.105"	0.064"	0.060"							2-½"	2-½"			
UNIVERSAL	2⅔" × ½"	THROUGH 36"	12"	0.052"-0.138"	0.060"-0.135"	0.052"	0.060"					2" × 2" × 3/16"	2" × 2" × 3/16"	3-½"	3-½"	3-⅜"	3-⅜"	3-½"
		42"-60"	12"	0.052"-0.168"	0.075"-0.164"	0.052"	0.060"					2" × 2" × 3/16"	2" × 2" × 3/16"	3-½"	3-½"	3-⅜"	3-⅜"	5-½"
		THROUGH 72"	12"	0.052"-0.168"	0.164"	0.052"	0.105"	0.079"	½"	⅞"	32 ksi	2" × 2" × 3/16"	2" × 2" × 3/16"	3-½"	3-½"	3-⅜"	3-⅜"	5-½"
		78"-84"	16¼"	0.168"		0.079"		DOUBLE 0.079"	½"	⅞"	32 ksi							
ANNULAR	2⅔" × ½"	THROUGH 36"	7"	0.064"-0.138"	0.060"-0.135"	0.052"	0.060"	0.079"	½"	⅞"	32 ksi	2" × 2" × 3/16"	2" × 2" × 3/16"	2-½"	2-½"	3-⅜"	3-⅜"	3-½"
		42"-72"	12"	0.064"-0.168"	0.075"-0.164"	0.052"	0.105"	0.079"	½"	⅞"	32 ksi	2" × 2" × 3/16"	2" × 2" × 3/16"	3-½"	3-½"	3-⅜"	3-⅜"	5-½"
		78"-84"	12"	0.168"		0.079"		0.109"	½"	⅞"	45 ksi	2" × 2" × 3/16"		3-½"		3-⅜"		5-½"
	3" × 1"	48"-90"	14"	0.064"-0.109"		0.052"		0.079"	½"	⅞"	32 ksi	2" × 2" × 3/16"		3-½"		3-⅜"		5-½"
		96"-120"	14"	0.079"-0.109"		0.052"		0.109"	½"	⅞"	45 ksi	2" × 2" × 3/16"		3-½"		4-⅜"		
		42"-108"	14"		0.060"-0.135"		0.060"						2" × 2" × 3/16"		3-½"		3-⅜"	
HELICAL	2⅔" × ½"	THROUGH 36"	12"	0.052"-0.138"	0.060"-0.135"	0.052"	0.060"	0.079"	½"	⅞"	32 ksi	2" × 2" × 3/16"	2" × 2" × 3/16"	3-½"	3-½"	3-⅜"	3-⅜"	3-½"
		42"-72"	12"	0.052"-0.168"	0.075"-0.164"	0.052"	0.060"	0.079"	½"	⅞"	32 ksi	2" × 2" × 3/16"	2" × 2" × 3/16"	3-½"	3-½"	3-⅜"	3-⅜"	5-½"
		78"-84"	12"	0.168"		0.079"		0.109"	½"	⅞"	45 ksi	2" × 2" × 3/16"		3-½"		3-⅜"		5-½"
	3" × 1"	48"-90"	14"	0.064"-0.109"		0.052"		0.079"	½"	⅞"	32 ksi	2" × 2" × 3/16"		3-½"		3-⅜"		5-½"
		96"-120"	14"	0.079"-0.109"		0.052"		0.109"	½"	⅞"	45 ksi	2" × 2" × 3/16"		3-½"		4-⅜"		
		42"-108"	14"		0.060"-0.135"		0.060"						2" × 2" × 3/16"		3-½"		3-⅜"	
HUGGER	2⅔" × ½" REROLLED END	12"-54"	4"	0.052"-0.109"		0.052"						2½" × 1½" × 3/16"	2½" × 1½" × 3/16"	1-½"				3-½"
		60"-66"	4"	0.109"		0.064"						2½" × 1½" × 3/16"	2½" × 1½" × 3/16"	1-½"				3-½"
		36"-48"	4"	0.138"		0.064"						2½" × 1½" × 3/16"	2½" × 1½" × 3/16"	1-½"				3-½"
		THROUGH 72"	10½"	0.052"-0.168"		0.052"		0.079"	½"	⅞"	32 ksi							
		78"-84"	10½"	0.168"		0.079"		0.109"	½"	⅞"	45 ksi							
	3" × 1" REROLLED END	48"-90"	10½"	0.064"-0.109"		0.052"		0.079"	½"	⅞"	32 ksi							
		96"-120"	10½"	0.079"-0.109"		0.052"		0.109"	½"	⅞"	45 ksi							
	5" × 1" REROLLED END	48"-66"	7½"	0.064"-0.109"		0.064"		0.079"	½"	⅞"	32 ksi	2½" × 1½" × 3/16"	2½" × 1½" × 3/16"	1-½"				3-½"
		72"-90"	7½"	0.064"-0.079"		0.064"		0.079"	½"	⅞"	32 ksi	2½" × 1½" × 3/16"	2½" × 1½" × 3/16"	1-½"				3-½"
		48"-90"	7½"	0.064"-0.138"		0.064"		0.079"	½"	⅞"	32 ksi							
		48"-120"	12" SEE	0.064"-0.109"		0.064"		0.079"	½"	⅞"	32 ksi							
		48"-84"	12" NOTE	0.138"		0.064"		0.079"	½"	⅞"	32 ksi							
		90"-120"	12" 11	0.138"		0.064"		DOUBLE 0.079"	½"	⅞"	32 ksi							

SPIRAL RIB PROFILE

COUPLING TYPE	PIPE CORRUGATION	PIPE SIZE	W	PIPE WALL THICKNESS SSRP	PIPE WALL THICKNESS ASRP	BAND THICKNESS SSRP	BAND THICKNESS ASRP	BAR AND STRAP (SSRP ONLY) STRAP THICKNESS	BOLTS Dia	BAR Dia	BAR YIELD STRENGTH	ANGLE DIMENSIONS SSRP	ANGLE DIMENSIONS ASRP	BOLTS (No.- Dia) SSRP	BOLTS (No.- Dia) ASRP	RIVETS ANGLE TO BAND SSRP	RIVETS ANGLE TO BAND ASRP	SPOT WELDS ANGLE TO BAND SSRP
ANNULAR	2⅔" × ½" * REROLLED END	24"-36"	12"	0.064"-0.109"	0.060"-0.105"	0.052"	0.060"	0.079"	½"	⅞"	32 ksi	2" × 2" × 3/16"	2" × 2" × 3/16"	3-½"	3-½"	3-⅜"	3-⅜"	5-½"
		42"-60"	12"	0.064"-0.109"	0.075"-0.105"	0.052"	0.105"	0.079"	½"	⅞"	32 ksi	2" × 2" × 3/16"	2" × 2" × 3/16"	3-½"	3-½"	3-⅜"	3-⅜"	5-½"
		66"-72"	12"	0.064"-0.109"		0.052"		0.079"	½"	⅞"	32 ksi	2" × 2" × 3/16"	2" × 2" × 3/16"	3-½"	3-½"	3-⅜"	3-⅜"	5-½"
		78"-114"	12"	0.079"-0.109"		0.079"		0.109"	½"	⅞"	45 ksi	2" × 2" × 3/16"	2" × 2" × 3/16"	3-½"	3-½"	3-⅜"	3-⅜"	5-½"
HUGGER	2⅔" × ½" * REROLLED END	24"-72"	10½"	0.064"-0.109"		0.052"		0.079"	½"	⅞"	32 ksi							
		78"-84"	10½"	0.109"		0.079"		0.109"	½"	⅞"	45 ksi							

* See Note 14.

14. All profiles of Spiral Rib Pipe (¾" × ¾" ribs at 7½" pitch and ¾" × 1" ribs at 11½" pitch in both steel and aluminum and ¾" × 1" ribs at 8½" pitch in steel only) shall be manufactured with rerolled ends. Corrugation profile of the rerolled ends shall be 2⅔" × ½" annual corrugations with a minimum of two full corrugations at each end.

NOTES:

To accompany plans dated 1-4-10

1. All ferrous metal coupling band connection hardware shall be galvanized or electro-plated in accordance with the Standard Specifications.
2. For helically corrugated coupling bands, the connection angles may be oriented parallel to the pipe axis, provided connecting holes are slotted lengthwise sufficiently to allow adjustment for the helix angle.
3. Tension strap may be connected to band with either spot welds or fillet welds that develop minimum required strength of strap.
4. Use 1¼" gage line dimension on attached angle leg for rivets and spot welds.
5. Band thickness shall not be less than:
   a. 3 standard thicknesses lighter than the thickness of the pipe for Corrugated Steel Pipe.
   b. 2 standard thicknesses lighter than the thickness of the pipe and in no case lighter than 0.060" for Corrugated Aluminum Pipe.
6. Dimensions, thicknesses and strengths shown are minimum.
7. For pipe arches use same width band as for round pipe of equal periphery.
8. Fillet welds of equivalent strenght may be substituted for spot welds or rivets.
9. Spot welds shall develop minimum required strength of strap.
10. Pipe with rerolled ends having at least two 2⅔" × ½" annular corrugations at each end with or without an upturned flange may be connected with any of the annular coupling bands shown for pipe of the same diameter and wall thickness and having 2⅔" × ½" corrugations.
11. In the case of H-12 huggerbands, two piece bands are required for diameters through 96" and three piece bands are required for diameters 102" through 120".
12. Two piece bands are required for pipes greater than 42" diameter.
13. The 2¼" × 2" × 0.109" thick galvanized die-formed angle connector may be used in lieu of the 2" × 2" × 3/16" angle connector for standard joints only on pipes through 72" diameter.

STATE OF CALIFORNIA
DEPARTMENT OF TRANSPORTATION

CORRUGATED METAL PIPE COUPLING DETAILS No. 5 STANDARD JOINT

NO SCALE

RSP D97E DATED JUNE 6, 2008 SUPERSEDES STANDARD PLAN D97E DATED MAY 1, 2006 - PAGE 187 OF THE STANDARD PLANS BOOK DATED MAY 2006.

REVISED STANDARD PLAN RSP D97E

2006 REVISED STANDARD PLAN RSP D97E

4-2-08

DIST	COUNTY	ROUTE	POST MILES TOTAL PROJECT	SHEET NO.	TOTAL SHEETS
03	Sac	50	R0.6/17.4	162	233

Raymond Don Tsztoo
REGISTERED CIVIL ENGINEER

June 6, 2008
PLANS APPROVAL DATE

REGISTERED PROFESSIONAL ENGINEER Raymond Don Tsztoo No. C37332 Exp. 6-30-08 CIVIL STATE OF CALIFORNIA

The State of California or its officers or agents shall not be responsible for the accuracy or completeness of electronic copies of this plan sheet.

To accompany plans dated 1-4-10

ANNULAR AND HELICAL PROFILE

COUPLING TYPE	PIPE CORRUGATION	PIPE SIZE	W OR A	PIPE WALL THICKNESS CSP	PIPE WALL THICKNESS CAP	BAND THICKNESS CSP	BAND THICKNESS CAP	BAR AND STRAP (CSP ONLY) STRAP THICKNESS	BOLTS Dia	BAR Dia	BAR YIELD STRENGTH	ANGLE DIMENSIONS CSP	ANGLE DIMENSIONS CAP	BOLTS (No. - Dia) CSP	BOLTS (No. - Dia) CAP	RIVETS ANGLE TO BAND CSP	RIVETS ANGLE TO BAND CAP	SPOT WELDS ANGLE TO BAND CSP
TWO PIECE INTEGRAL FLANGE	1½" × ¼"	6"-10"	7"	0.064"-0.079"	0.060"	0.064"	0.060"							2-⅜"	2-⅜"			
	2⅔" × ½"	12"-24"	12"		0.060"-0.105"		0.060"								3-½"			
UNIVERSAL	2⅔" × ½"	THROUGH 36"	12"	0.064"-0.138"	0.060"-0.135"	0.064"	0.060"	0.079"	½"	⅞"	32 ksi	2" × 2" × 3/16"	2" × 2" × 3/16"	3-½"	3-½"	3-⅜"	3-⅜"	5-½"
		42"-60"	16¼"	0.064"-0.168"	0.060"-0.164"	0.064"	0.060"	DOUBLE 0.079"	½"	⅞"	32 ksi	2" × 2" × ¼"	2" × 2" × ¼"	4-½"	4-½"	5-⅜"	5-⅜"	
ANNULAR	2⅔" × ½"	THROUGH 36"	12"	0.064"-0.138"	0.060"-0.135"	0.064"	0.060"					2" × 2" × 3/16"	2" × 2" × 3/16"	3-½"	3-½"	3-⅜"	3-⅜"	5-½"
		42"-60"	12"	0.064"-0.079"		0.064"						2" × 2" × 3/16"		3-½"		3-⅜"		5-½"
		42"-60"	12"	0.109"-0.168"	0.135"-0.164"	0.064"	0.075"					2" × 2" × ¼"	2" × 2" × ¼"	3-½"	3-½"	5-⅜"	5-⅜"	
		66"-72"	24"		0.164"		0.105"						2" × 2" × ¼"		5-½"		5-½"	
		66"-84"	24"	0.109"-0.168"		0.064"						2" × 2" × ¼"		5-½"		7-⅜"		
		42"-54"	12"		0.060"-0.105"		0.060"						2" × 2" × 3/16"		3-½"		3-⅜"	
	3" × 1"	48"-60"	14"	0.064"-0.079"		0.064"						2" × 2" × 3/16"		3-½"		3-⅜"		5-½"
		48"-60"	14"	0.109"		0.064"						2" × 2" × 3/16"		3-½"		5-⅜"		
		66"-120"	25"	0.064"-0.109"		0.064"						2" × 2" × 3/16"		5-½"		9-⅜"		
		42"-60"	14"		0.060"-0.105"		0.060"						2" × 2" × 3/16"		3-½"		5-⅜"	
		42"-60"	14"		0.135"		0.075"						2" × 2" × ¼"		3-½"		5-⅜"	
		66"-96"	25"		0.060"-0.135"		0.060"						2" × 2" × ¼"		5-½"		7-⅜"	
		96"-108"	25"		0.135"		0.075"						2" × 2" × ¼"		5-½"		7-⅜"	
HELICAL	2⅔" × ½"	THROUGH 36"	12"	0.064"-0.138"	0.060"-0.135"	0.064"	0.060"					2" × 2" × 3/16"	2" × 2" × 3/16"	3-½"	3-½"	3-⅜"	3-⅜"	5-½"
		42"-54"	12"		0.060"-0.105"		0.060"						2" × 2" × 3/16"		3-½"		3-⅜"	
		42"-60"	12"	0.064"-0.079"		0.064"						2" × 2" × 3/16"		3-½"		3-⅜"		5-½"
		42"-60"	12"	0.109"-0.168"	0.135"-0.164"	0.064"	0.075"					2" × 2" × ¼"	2" × 2" × ¼"	3-½"	3-½"	5-⅜"	5-⅜"	
		66'-84"	24"	0.109"-0.168"		0.064"						2" × 2" × ¼"		5-½"		7-⅜"		
		66"-72"	24"		0.164"		0.105"						2" × 2" × ¼"		5-½"		5-⅜"	
	3" × 1"	48"-60"	14"	0.064"-0.079"		0.064"						2" × 2" × 3/16"		3-½"		3-⅜"		5-½"
		48"-60"	14"	0.109"		0.064"						2" × 2" × 3/16"		3-½"		5-⅜"		
		66"-120"	25"	0.064"-0.109"		0.064"						2" × 2" × 3/16"		5-½"		9-⅜"		
		42"-60"	14"		0.060"-0.105"		0.060"						2" × 2" × 3/16"		3-½"		5-⅜"	
		42"-60"	14"		0.135"		0.075"						2" × 2" × ¼"		3-½"		5-⅜"	
		66"-96"	25"		0.060"-0.135"		0.060"						2" × 2" × ¼"		5-½"		7-⅜"	
		96"-108"	25"		0.135"		0.075"						2" × 2" × ¼"		5-½"		7-⅜"	
HUGGER	2⅔" × ½" REROLLED END	THROUGH 48"	10½"	0.109"		0.064"		0.079"	½"	⅞"	32 ksi							
		54"- 66"	10½"	0.109"		0.064"		DOUBLE 0.079"	½"	⅞"	32 ksi							
		THROUGH 54"	10½"	0.064"-0.079"		0.064"		0.079"	½"	⅞"	32 ksi							
		THROUGH 60"	10½"	0.138"		0.079"		DOUBLE 0.079"	½"	⅞"	32 ksi							
		66"-72"	10½"	0.138"		0.109"		DOUBLE 0.079"	½"	⅞"	32 ksi							
		THROUGH 72"	10½"	0.168"		0.109"		DOUBLE 0.109"	½"	⅞"	45 ksi							
	3" × 1" REROLLED END	48"-84"	10½"	0.109"		0.079"		DOUBLE 0.079"	½"	⅞"	32 ksi							
		48"-90"	10½"	0.064"-0.079"		0.064"		DOUBLE 0.079"	½"	⅞"	32 ksi							
		96"-102"	10½"	0.079"		0.079"		DOUBLE 0.079"	½"	⅞"	32 ksi							
		90"-120"	10½"	0.109"		0.109"		DOUBLE 0.109"	½"	⅞"	45 ksi							

SPIRAL RIB PROFILE

COUPLING TYPE	PIPE CORRUGATION	PIPE SIZE	W	PIPE WALL THICKNESS SSRP	PIPE WALL THICKNESS ASRP	BAND THICKNESS SSRP	BAND THICKNESS ASRP	BAR AND STRAP (SSRP ONLY) STRAP THICKNESS	BOLTS Dia	BAR Dia	BAR YIELD STRENGTH	ANGLE DIMENSIONS SSRP	ANGLE DIMENSIONS ASRP	BOLTS (No.- Dia) SSRP	BOLTS (No.- Dia) ASRP	RIVETS ANGLE TO BAND SSRP	RIVETS ANGLE TO BAND ASRP	SPOT WELDS ANGLE TO BAND SSRP
ANNULAR	2⅔" × ½" * REROLLED END	24"-36"	12"	0.064"-0.109"	0.060"-0.105"	0.064"	0.060"	0.079"	½"	⅞"	32 ksi	2" × 2" × 3/16"	2" × 2" × 3/16"	3-½"	3-½"	3-⅜"	3-⅜"	5-½"
		42"-60"	12"	0.064"-0.079"	0.075"-0.105"	0.064"	0.075"	0.079"	½"	⅞"	32 ksi	2" × 2" × 3/16"	2" × 2" × 3/16"	3-½"	3-½"	3-⅜"	3-⅜"	5-½"
		42"-60"	12"	0.109"		0.064"		0.079"	½"	⅞"	32 ksi	2" × 2" × ¼"		3-½"		5-⅜"		
		66"-84"	24"	0.109"		0.064"		0.079"	½"	⅞"	32 ksi	2" × 2" × ¼"		5-½"		7-⅜"		
HUGGER	2⅔" × ½" * REROLLED END	24"-54"	10½"	0.064"-0.079"		0.064"		0.079"	½"	⅞"	32 ksi							
		24"-48"	10½"	0.109"		0.064"		0.079"	½"	⅞"	32 ksi							
		54"-66"	10½"	0.109"		0.064"		Double 0.079"	½"	⅞"	32 ksi							

* See Note 13.

NOTES:

1. All ferrous metal coupling band connection hardware shall be galvanized or electroplated in accordance with the Standard Specifications.
2. For helically corrugated coupling bands, the connection angles may be oriented parallel to the pipe axis, provided connecting holes are slotted lengthwise sufficiently to allow adjustment for the helix angle.
3. Tension strap may be connected to band with either spot welds or fillet welds that develop minimum required strength of strap.
4. Use 1¼" gage line dimension on attached angle leg for rivets and spot welds.
5. Band thickness shall not be less than:
   a. 3 standard thicknesses lighter than the thickness of the pipe for Corrugated Steel Pipe.
   b. 2 standard thicknesses lighter than the thickness of the pipe and in no case lighter than 0.060" for Corrugated Aluminum Pipe.
6. Dimensions, thicknesses and strengths shown are minimum.
7. For pipe arches use same width band as for round pipe of equal periphery.
8. Fillet welds of equivalent strength may be substituted for spot welds or rivets.
9. Spot welds shall develop minimum required strength of strap.
10. Pipe with rerolled ends having at least two 2⅔" × ½" annular corrugations at each end with or without an upturned flange may be connected with any of the annular coupling bands shown for pipe of the same diameter and wall thickness and having 2⅔" × ½" corrugations.
11. In the case of H-12 huggerbands, two piece bands are required for diameters through 96" and three piece bands are required for diameters 102" through 120".
12. Two piece bands are required for pipes greater than 42" diameter.
13. All profiles of Spiral Rib Pipe (¾" × ¾" ribs at 7½" pitch and ¾" × 1" ribs at 11½" pitch in both steel and aluminum and ¾" × 1" ribs at 8½" pitch in steel only) shall be manufactured with rerolled ends. Corrugation profile of the rerolled ends shall be 2⅔" × ½" annual corrugations with a minimum of two full corrugations at each end.

STATE OF CALIFORNIA
DEPARTMENT OF TRANSPORTATION

CORRUGATED METAL PIPE COUPLING DETAILS No. 6 POSITIVE JOINT

NO SCALE

RSP D97F DATED JUNE 6, 2008 SUPERSEDES STANDARD PLAN D97F
DATED MAY 1, 2006 - PAGE 188 OF THE STANDARD PLANS BOOK DATED MAY 2006.

REVISED STANDARD PLAN RSP D97F

2006 REVISED STANDARD PLAN RSP D97F

4-2-08

DIST	COUNTY	ROUTE	POST MILES TOTAL PROJECT	SHEET NO.	TOTAL SHEETS
03	Sac	50	R0.6/17.4	163	233

Raymond Don Tsztoo
REGISTERED CIVIL ENGINEER

June 6, 2008
PLANS APPROVAL DATE

REGISTERED PROFESSIONAL ENGINEER
Raymond Don Tsztoo
No. C37332
Exp. 6-30-08
CIVIL
STATE OF CALIFORNIA

The State of California or its officers or agents shall not be responsible for the accuracy or completeness of electronic copies of this plan sheet.

To accompany plans dated 1-4-10

ANNULAR AND HELICAL PROFILE

COUPLING TYPE	PIPE CORRUGATION	PIPE SIZE	W OR A	PIPE WALL THICKNESS		BAND THICKNESS		BAR AND STRAP (CSP ONLY)			ANGLE						
											DIMENSIONS		BOLTS (No.- Dia)		RIVETS ANGLE TO BAND		SPOT WELDS ANGLE TO BAND
				CSP	CAP	CSP	CAP	STRAP THICKNESS	BOLTS Dia	BAR Dia	CSP	CAP	CSP	CAP	CSP	CAP	CSP
TWO PIECE INTEGRAL FLANGE	1½′ × ¼″	6″	7″	0.064″-0.168″		0.052″							3-⅜″				
	1½′ × ¼″	8″-10″	7″	0.064″-0.168″	0.060″-0.164″	0.064″	0.060″						3-⅜″	3-⅜″			
ANNULAR	2⅔″ × ½″	THROUGH 24″	12″	0.064″-0.168″	0.060″-0.164″	0.064″	0.060″				2″ × 2″ × 3⁄16″	2″ × 2″ × 3⁄16″	3-½″	3-½″	3-⅜″	3-⅜″	3-½″
HUGGER	2⅔″ × ½″ REROLLED END	THROUGH 24″	10½″	0.064″-0.168″		0.064″		0.079″	½″	⅞″							

SPIRAL RIB PROFILE

COUPLING TYPE	PIPE CORRUGATION	PIPE SIZE	W	PIPE WALL THICKNESS		BAND THICKNESS		BAR AND STRAP (SSRP ONLY)			ANGLE						
											DIMENSIONS		BOLTS (No.- Dia)		RIVETS ANGLE TO BAND		SPOT WELDS ANGLE TO BAND
				SSRP	ASRP	SSRP	ASRP	STRAP THICKNESS	BOLTS Dia	BAR Dia	SSRP	ASRP	SSRP	ASRP	SSRP	ASRP	SSRP
ANNULAR	2⅔″ × ½″ * REROLLED END	24″	12″	0.064″-0.168″	0.060″-0.164″	0.064″	0.060″				2″ × 2″ × 3⁄16″	2″ × 2″ × 3⁄16″	3-½″	3-½″	3-⅜″	3-⅜″	3-½″
HUGGER	2⅔″ × ½″ * REROLLED END	24″	10½″	0.064″-0.168″		0.064″		0.079″	½″	⅞″							

* See Note 12.

12. All profiles of Spiral Rib Pipe (¾″ × ¾″ ribs at 7½″ pitch and ¾″ × 1″ ribs at 11½″ pitch in both steel and aluminum and ¾″ × 1″ ribs at 8½″ pitch in steel only) shall be manufactured with rerolled ends. Corrugation profile of the rerolled ends shall be 2⅔″ × ½″ annual corrugations with a minimum of two full corrugations at each end.

NOTES:

1. All ferrous metal coupling band connection hardware shall be galvanized or electro-plated in accordance with the Standard Specifications.
2. For helically corrugated coupling bands, the connection angles may be oriented parallel to the pipe axis, provided connecting holes are slotted lengthwise sufficiently to allow adjustment for the helix angle.
3. Tension strap may be connected to band with either spot welds or fillet welds that develop minimum required strength of strap.
4. Use 1¼″ gage line dimension on attached angle leg for rivets and spot welds.
5. Band thickness shall not be less than:
   a. 3 standard thicknesses lighter than the thickness of the pipe for Corrugated Steel Pipe.
   b. 2 standard thicknesses lighter than the thickness of the pipe and in no case lighter than 0.060″ for Corrugated Aluminum Pipe.
6. Dimensions, thicknesses and strengths shown are minimum.
7. For pipe arches use same width band as for round pipe of equal periphery.
8. Fillet welds of equivalent strenght may be substituted for spot welds or rivets.
9. Spot welds shall develop minimum required strength of strap.
10. Pipe with rerolled ends having at least two 2⅔″ × ½″ annular corrugations at each end with or without an upturned flange may be connected with any of the annular coupling bands shown for pipe of the same diameter and wall thickness and having 2⅔″ × ½″ corrugations.
11. For downdrain applications, two piece integral flange couplers shall have factory applied sleeve type rubber gaskets with a minimum length of 7″ measured along the length of the pipe.

STATE OF CALIFORNIA
DEPARTMENT OF TRANSPORTATION

CORRUGATED METAL PIPE COUPLING DETAILS No. 7 DOWNDRAIN

NO SCALE

RSP D97G DATED JUNE 6, 2008 SUPERSEDES STANDARD PLAN D97G
DATED MAY 1, 2006 - PAGE 189 OF THE STANDARD PLANS BOOK DATED MAY 2006.

REVISED STANDARD PLAN RSP D97G

2006 REVISED STANDARD PLAN RSP D97G

4-4-08

DIST	COUNTY	ROUTE	POST MILES TOTAL PROJECT	SHEET NO.	TOTAL SHEETS
03	Sac	50	R0.6/17.4	164	233

Raymond Don Tsztoo
REGISTERED CIVIL ENGINEER

March 7, 2008
PLANS APPROVAL DATE

REGISTERED PROFESSIONAL ENGINEER
Raymond Don Tsztoo
No. C37332
Exp. 6-30-08
CIVIL
STATE OF CALIFORNIA

The State of California or its officers or agents shall not be responsible for the accuracy or completeness of electronic copies of this plan sheet.

To accompany plans dated 1-4-10

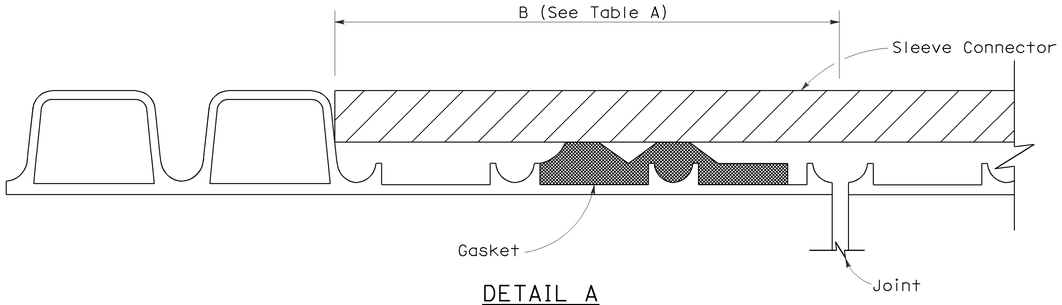

DETAIL A

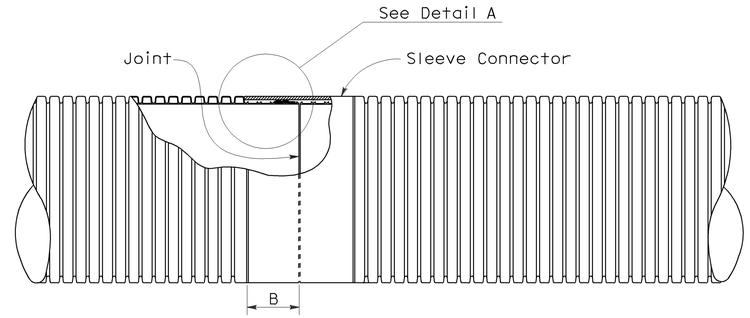

PLAN VIEW
Liner Insert
See Note 4

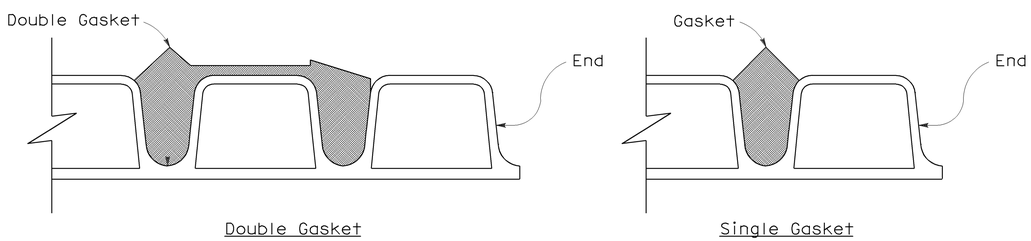

DETAIL B

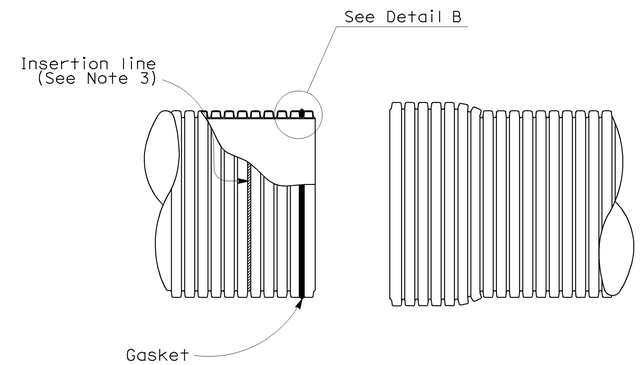

SPIGOT BELL

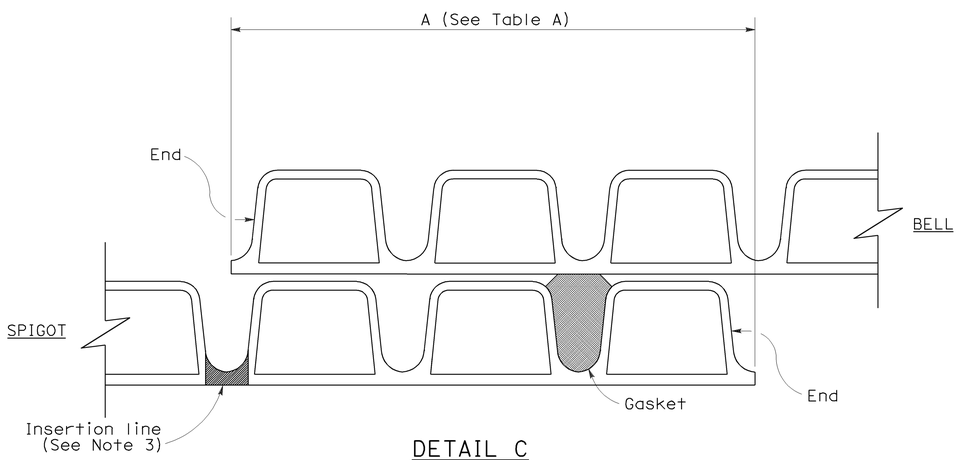

DETAIL C
(Single gasket shown)

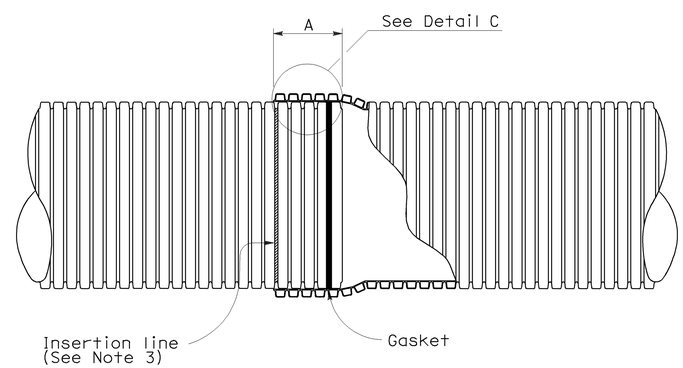

BELL AND SPIGOT JOINT

NOTES:

1. For pipe sections installed on straight alignment, the pipe sections shall be joined to achieve maxium joint overlap at all points on the periphery as indicated in Table A where the plans call for positive or watertight joints. Maxium joint overlap is recommended where the plans call for standard joints, but in no case shall the joint overlap be less than 3½".
2. For pipe sections installed on curved alignment, the maxium angle of deflection from straight alignment at any joint shall not exceed two degrees. Where the plans call for watertightness, field testing for compliance is required. Where plans call for positive joints, the pipe sections shall be joined to achieve Table A Dimensions on one side of the joint. Joints classified as standard shall have no less than 3½" joint overlap at any point on the periphery.
3. Factory applied insertion line limit shall be placed on spigot.
4. Liner insert to be used inside of existing pipe.

TABLE A

JOINT OVERLAP DIMENSIONS		
PIPE Dia (NOMINAL)	A	B
12"	5¾"	4¼"
15"	6¾"	5⅝"
18"	6¾"	5⅝"
21"	8½"	5⅝"
24"	8½"	6⅛"
30"	8½"	7⅛"
36"	8½"	8⅛"

STATE OF CALIFORNIA
DEPARTMENT OF TRANSPORTATION

CORRUGATED POLYVINYL CHLORIDE PIPE WITH SMOOTH INTERIOR STANDARD AND POSITIVE JOINTS

NO SCALE

NSP D97I DATED MARCH 7, 2008 SUPPLEMENTS THE STANDARD PLANS BOOK DATED MAY 2006.

NEW STANDARD PLAN NSP D97I

2006 NEW STANDARD PLAN NSP D97I

2-13-08

DIST	COUNTY	ROUTE	POST MILES TOTAL PROJECT	SHEET NO.	TOTAL SHEETS
03	Sac	50	R0.6/17.4	165	233

Raymond Don Tsztoo
REGISTERED CIVIL ENGINEER

June 6, 2008
PLANS APPROVAL DATE

REGISTERED PROFESSIONAL ENGINEER
Raymond Don Tsztoo
No. C37332
Exp. 6-30-08
CIVIL
STATE OF CALIFORNIA

The State of California or its officers or agents shall not be responsible for the accuracy or completeness of electronic copies of this plan sheet.

To accompany plans dated 1-4-10

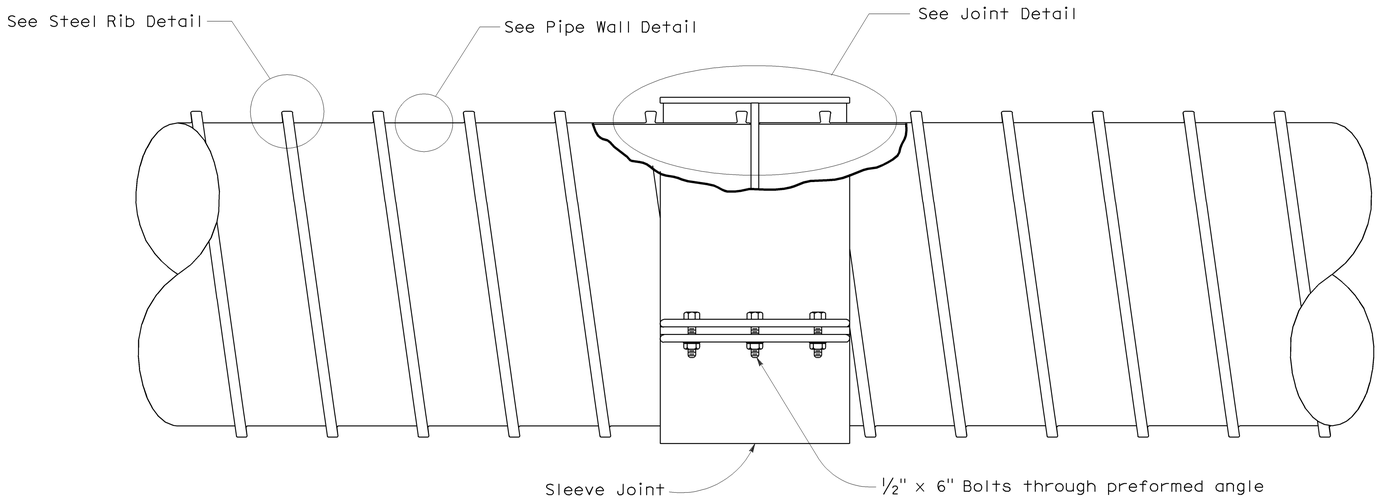

COMPOSITE STEEL SPIRAL RIB PIPE

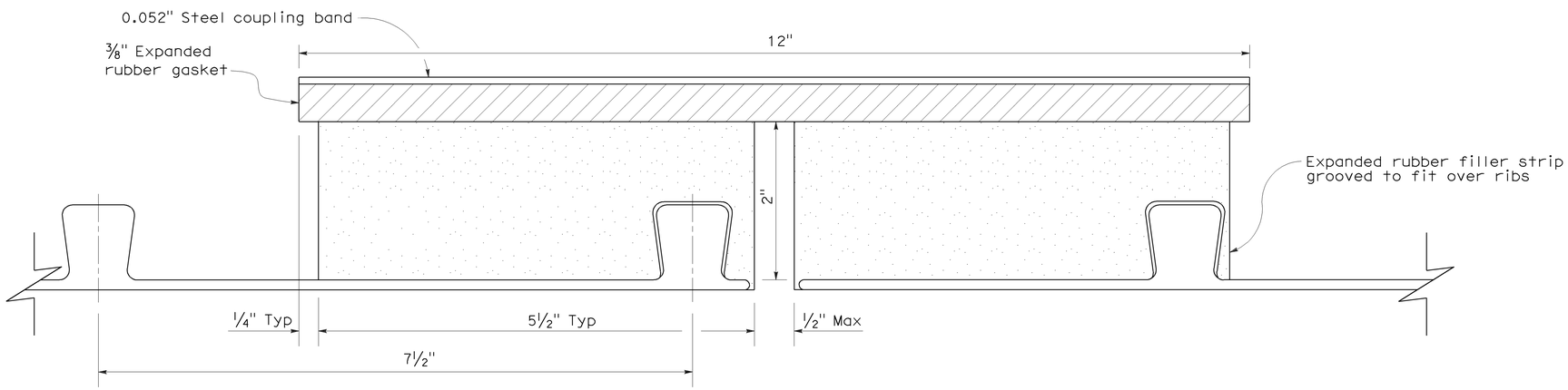

JOINT DETAIL

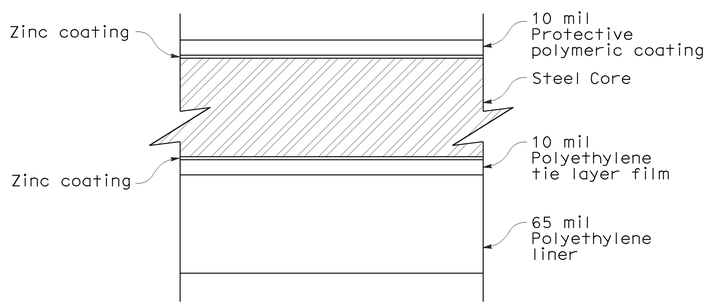

PIPE WALL DETAIL

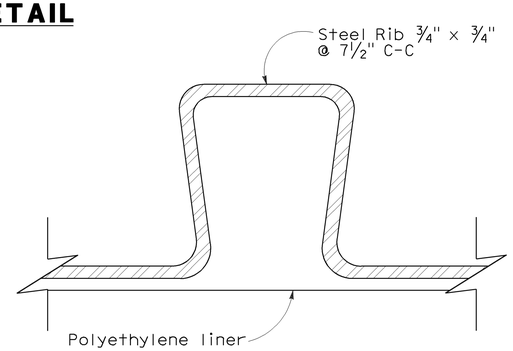

STEEL RIB DETAIL

NOTES:

1. Pipe to conform to ASTM A 978.
2. See Standard Plan A62F for backfill details.
3. Protective polymer film to conform to ASTM A 742 and AASHTO M 246.
4. See Standard Plan D97C for Universal Coupling details.
5. Strap joint connection shall consist of 2 separate bolted preformed connectors joined to form one strap when pipe inside diameter is greater than or equal to 60".

STATE OF CALIFORNIA
DEPARTMENT OF TRANSPORTATION

COMPOSITE STEEL SPIRAL RIB PIPE WITH SMOOTH INTERIOR STANDARD JOINT

NO SCALE

NSP D97J DATED JUNE 6, 2008 SUPPLEMENTS THE STANDARD PLANS BOOK DATED MAY 2006.

NEW STANDARD PLAN NSP D97J

2006 NEW STANDARD PLAN NSP D97J

4-24-08

DIST	COUNTY	ROUTE	POST MILES TOTAL PROJECT	SHEET NO.	TOTAL SHEETS
03	Sac	50	R0.6/17.4	166	233

Gregory A. Balzer
LICENSED LANDSCAPE ARCHITECT

June 5, 2009
PLANS APPROVAL DATE

The State of California or its officers or agents shall not be responsible for the accuracy or completeness of electronic copies of this plan sheet.

LICENSED LANDSCAPE ARCHITECT
Gregory A. Balzer 2576
Gregory A. Balzer
03-09
Renewal Date
2-28-11
Renewal Date
5-14-09
Date
STATE OF CALIFORNIA

To accompany plans dated 1-4-10

A

AB	aggregate base
ABS	acrylonitrile-butadiene-styrene
AC	asphalt concrete
Adj	adjacent/adjustable
AIC	auxiliary irrigation controller
Alt	alternative
AMEND	amendment
ARV	air release valve
AUTO	automatic
AUX	auxiliary
AVB	atmospheric vacuum breaker

B

B&B	balled and burlapped
B/B	brass/bronze
B/B/PL	brass/bronze/plastic
B/PL	brass/plastic
BFM	bonded fiber matrix
Bit Ctd	bituminous coated
BP	booster pump
BPA	backflow preventer assembly
BPAE	backflow preventer assembly in enclosure
BPE	backflow preventer enclosure
BV	ball valve

C

CAP	corrugated aluminum pipe
CARV	combination air release valve
CCA	cam coupler assembly
CEC	controller enclosure cabinet
CHDPE	corrugated high density polyethylene
CL	chain link
CNC	control and neutral conductors
Conc	concrete
Cond	conduit
CSP	corrugated steel pipe
CST	center strip
CV	check valve

D

Dia	diameter
DIP	ductile iron pipe
DN	diameter nominal

E

EA	each
Elect	electric/electrical
Elev	elevation
ENCL	enclosure
EP	edge of pavement
ES	edge of shoulder
EST	end strip
ESTB	establishment
ETW	edge of traveled way

F

F	full circle
F/P	full/part circle
FAU	filter assembly unit
FCV	flow control valve
FERT	fertilizer
FG	finished grade
FIPT	female iron pipe thread
FIS	fertilizer injector system
FL	flow line
FM	flow monitor
FS	flow sensor
Ft	foot/feet
FV	flush valve

G

GAL	Gallon(s)
Galv	galvanized
GARV	garden valve
GPH	gallons per hour
GPM	gallons per minute
GSP	galvanized steel pipe
GV	gate valve

H

H	half circle
HB	hose bib
HDPE	high density polyethylene
HP	horsepower/hinge point
HPL	high pressure line
Hwy	highway

I

IC	irrigation controller
ICC	irrigation controller(s) in controller enclosure cabinet
ID	inside diameter
In	inches
IFS	irrigation filtration system
IPS	iron pipe size
IPT	iron pipe thread
Irr	irrigation

L

L	length
LF	linear foot

M

Max	maximum
MBGR	metal beam guard railing
MCV	manual control valve
MIC	master irrigation controller
Min	minimum
MIPT	male iron pipe thread
Misc	miscellaneous
Mtl	material
MVP	maintenance vehicle pullout

N

NCN	no common name
NL	nozzle line
No.	number
NPT	national pipe thread

O

O/C	on center
OD	outside diameter
Oz	ounce

P

P	part circle
PB	pull box
PCC	portland cement concrete
PE	polyethylene
Pkt	packet
PL	plastic
PLT	plant/planting
PLT ESTB	plant establishment
PM	post mile
PR	pressure rated
PRLV	pressure relief valve
PSFM	polymer stabilized fiber matrix
PSI	pounds per square inch
PRV	pressure reducing valve
PVC	polyvinyl chloride
Pvmt	pavement

Q

Q	quarter circle
QCV	quick coupling valve

R

R	radius
RCP	reinforced concrete pipe
RCV	remote control valve
RCVM	remote control valve (master)
RCVMF	remote control valve (master) w/ flow meter
RCW	recycled/reclaimed water
RECP	rolled erosion control product
REQ	required
R/W	right of way

S

S	slip
SCC	sprinkler control conduit
SCH	schedule
SF	state-furnished
Shld	shoulder
SQFT	square foot/feet
SQYD	square yard(s)
SST	side strip
Sta	station
Std	standard
SW	sidewalk/sound wall

T

T	third circle/thread
TLS	truck loading standpipe
TQ	three quarter circle
TRM	turf reinforcement mat
TRVD	traveled
TT	two third circle
Typ	typical

U

UG	underground

V

VAU	valve assembly unit

W

W	width
W/	with
WM	water meter
WS	wye strainer
WSP	welded steel pipe
WWM	welded wire mesh

NOTE:

FOR ADDITIONAL ABBREVIATIONS, SEE STANDARD PLANS A10A AND A10B.

STATE OF CALIFORNIA
DEPARTMENT OF TRANSPORTATION

PLANTING AND IRRIGATION ABBREVIATIONS

NO SCALE

RSP H1 DATED JUNE 5, 2009 SUPERSEDES STANDARD PLAN H1
DATED MAY 1, 2006 - PAGE 201 OF THE STANDARD PLANS BOOK DATED MAY 2006.

REVISED STANDARD PLAN RSP H1

2006 REVISED STANDARD PLAN RSP H1

DIST	COUNTY	ROUTE	POST MILES TOTAL PROJECT	SHEET NO.	TOTAL SHEETS
03	Sac	50	R0.6/17.4	167	233

LICENSED LANDSCAPE ARCHITECT

June 5, 2009
PLANS APPROVAL DATE

Gregory A. Balzer 2576 — 10-09 Expiration Date — 2-28-11 Renewal Date — 5-14-09 Date — LICENSED LANDSCAPE ARCHITECT — STATE OF CALIFORNIA

The State of California or its officers or agents shall not be responsible for the accuracy or completeness of electronic copies of this plan sheet.

To accompany plans dated 1-4-10

EXISTING	PROPOSED	ITEM DESCRIPTION
		WATER METER (WM)
		BACKFLOW PREVENTER ASSEMBLY (BPA)
		BACKFLOW PREVENTER ASSEMBLY IN ENCLOSURE (BPAE)
		BACKFLOW PREVENTER ENCLOSURE (BPE)
		BOOSTER PUMP (BP)
		TRUCK LOADING STANDPIPE (TLS)
FS	FS	FLOW SENSOR (FS)
X	X	MASTER IRRIGATION CONTROLLER (MIC)
		AUXILIARY IRRIGATION CONTROLLER (AIC)
		IRRIGATION CONTROLLER (IC)/ IRRIGATION CONTROLLER (IC) (BATTERY) IRRIGATION CONTROLLER (IC) (SOLAR)
		IRRIGATION CONTROLLER(S) IN CONTROLLER ENCLOSURE CABINET (ICC)
		CONTROL AND NEUTRAL CONDUCTORS (CNC)
SCC	SCC	SPRINKLER CONTROL CONDUIT (SCC)
		IRRIGATION CROSSOVER
		EXTEND IRRIGATION CROSSOVER
		IRRIGATION SLEEVE
dip	DIP	DUCTILE IRON PIPE (SUPPLY LINE) (MAIN) (DIP)
		GALVANIZED STEEL PIPE (SUPPLY LINE) (MAIN) (GSP)
		GALVANIZED STEEL PIPE (SUPPLY LINE) (LATERAL) (GSP)
		PLASTIC PIPE (PR 200) (SUPPLY LINE) (MAIN)
		PLASTIC PIPE (PR 200) (SUPPLY LINE) (LATERAL)
		PLASTIC PIPE (IRRIGATION LINE)
		REMOTE CONTROL VALVE (RCV) REMOTE CONTROL VALVE (MASTER) (RCVM) REMOTE CONTROL VALVE (MASTER) W/FLOW METER (RCVMF)
		MANUAL CONTROL VALVE (MCV)
		VALVE ASSEMBLY UNIT (VAU)
		WYE STRAINER (WS)
		FILTER ASSEMBLY UNIT (FAU)
		GATE VALVE (GV)
		BALL VALVE (BV)

EXISTING	PROPOSED	ITEM DESCRIPTION
		QUICK COUPLING VALVE (QCV)
		CAM COUPLER ASSEMBLY (CCA)
		PRESSURE REDUCING VALVE (PRV)
		PRESSURE RELIEF VALVE (PRLV)
		FLOW CONTROL VALVE (FCV)
		COMBINATION AIR RELEASE VALVE (CARV)
		CHECK VALVE (CV)
		FLUSH VALVE (FV)
		NOZZLE LINE W/TURNING UNION
		IRRIGATION SYSTEM
		IRRIGATION SYSTEM TO BE REMOVED
		CHAIN LINK GATE
		QUICK COUPLING VALVE W/SPRINKLER PROTECTOR
3	3	SPRINKLER W/SPRINKLER PROTECTOR
	C	CONNECT TO EXISTING SYSTEM
		CAP
		CAP EXISTING

VALVE CODE

RCV SIZE
IRRIGATION CONTROLLER
CONTROLLER STATION
VALVE IN PARALLEL (IF APPLICABLE)
GPM
QUANTITY OF SPRINKLERS (WHEN SHOWN)

* 2½"-A-2b-40 -60

MCV SIZE
VALVE NUMBER
GPM
QUANTITY OF TYPE SPRINKLERS (WHEN SHOWN)

* 2"-3-30 -50

* VALVE CODES FOR EXISTING VALVES ARE SHOWN IN A DASHED ENCLOSURE.

STATE OF CALIFORNIA
DEPARTMENT OF TRANSPORTATION

PLANTING AND IRRIGATION SYMBOLS

NO SCALE

RSP H2 DATED JUNE 5, 2009 SUPERSEDES RSP H2 DATED MARCH 7, 2008 AND STANDARD PLAN H2 DATED MAY 1, 2006 - PAGE 202 OF THE STANDARD PLANS BOOK DATED MAY 2006.

REVISED STANDARD PLAN RSP H2

2006 REVISED STANDARD PLAN RSP H2

5-11-09

DIST	COUNTY	ROUTE	POST MILES TOTAL PROJECT	SHEET NO.	TOTAL SHEETS
03	Sac	50	R0.6/17.4	168	233

LICENSED LANDSCAPE ARCHITECT

June 5, 2009
PLANS APPROVAL DATE

LICENSED LANDSCAPE ARCHITECT — Gregory A. Balzer 2576 — 10-01-09 Expiration Date — 2-28-11 Renewal Date — 5-14-09 Date — STATE OF CALIFORNIA

The State of California or its officers or agents shall not be responsible for the accuracy or completeness of electronic copies of this plan sheet.

To accompany plans dated 1-4-10

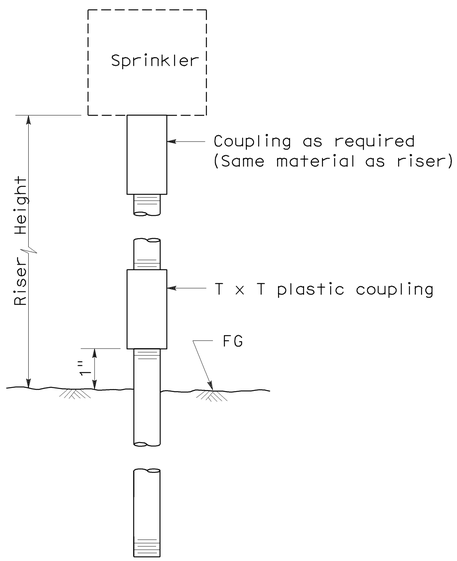

ELEVATION
RISER TYPE I

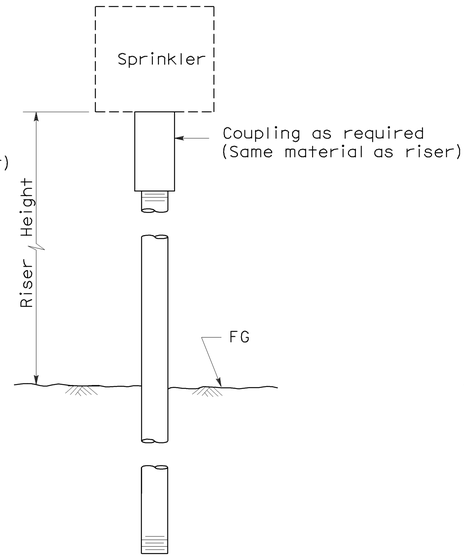

ELEVATION
RISER TYPE II

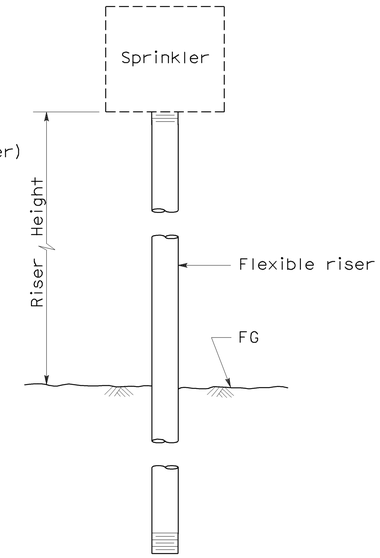

ELEVATION
RISER TYPE III

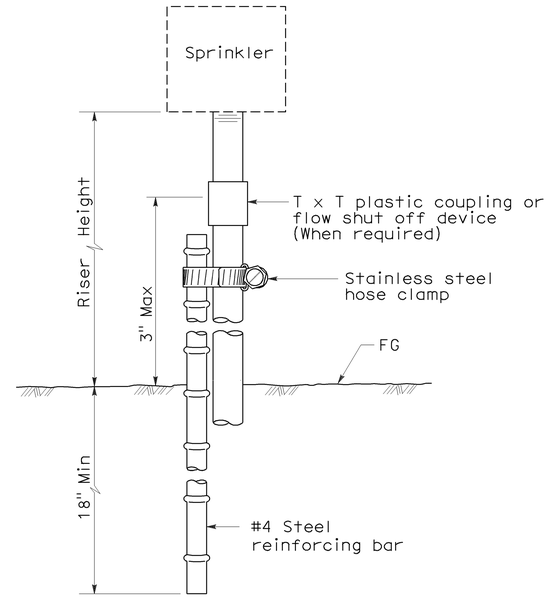

ELEVATION
RISER TYPE IV

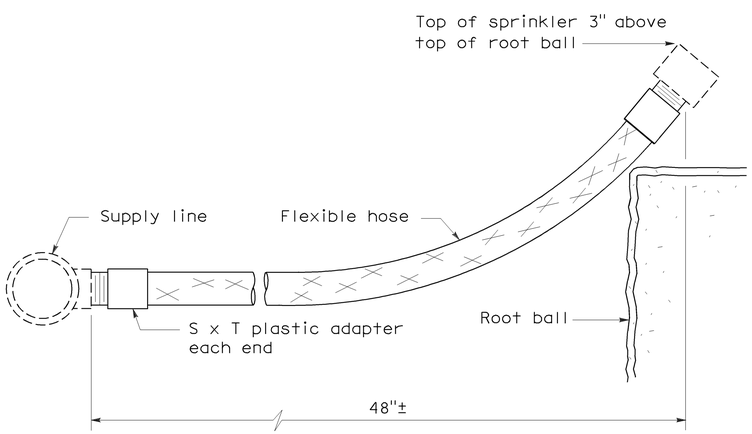

ELEVATION
RISER TYPE V

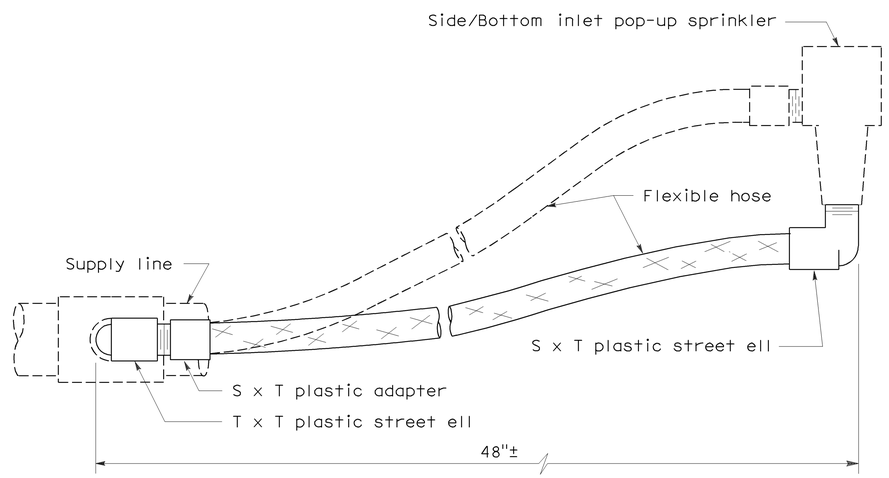

ELEVATION
RISER TYPE VI

STATE OF CALIFORNIA
DEPARTMENT OF TRANSPORTATION

PLANTING AND IRRIGATION DETAILS

NO SCALE

RSP H5 DATED JUNE 5, 2009 SUPERSEDES STANDARD PLAN H5
DATED MAY 1, 2006 - PAGE 205 OF THE STANDARD PLANS BOOK DATED MAY 2006.

REVISED STANDARD PLAN RSP H5

2006 REVISED STANDARD PLAN RSP H5

5-28-09

DIST	COUNTY	ROUTE	POST MILES TOTAL PROJECT	SHEET NO.	TOTAL SHEETS
03	Sac	50	R0.6/17.4	169	233

LICENSED LANDSCAPE ARCHITECT

June 5, 2009
PLANS APPROVAL DATE

The State of California or its officers or agents shall not be responsible for the accuracy or completeness of electronic copies of this plan sheet.

LICENSED LANDSCAPE ARCHITECT — Gregory A. Balzer — 2576 — 2-28-11 — 5-14-09 — STATE OF CALIFORNIA

To accompany plans dated 1-4-10

2006 REVISED STANDARD PLAN RSP H7

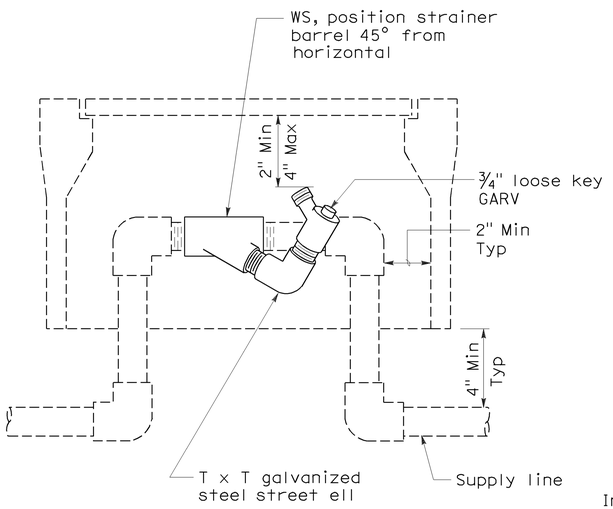

ELEVATION
WYE STRAINER

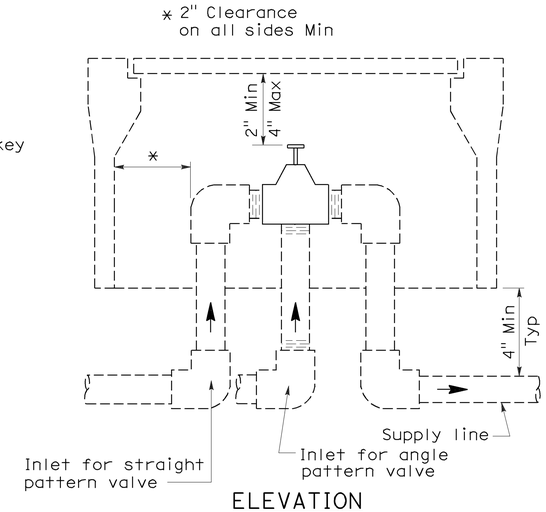

ELEVATION
VALVE

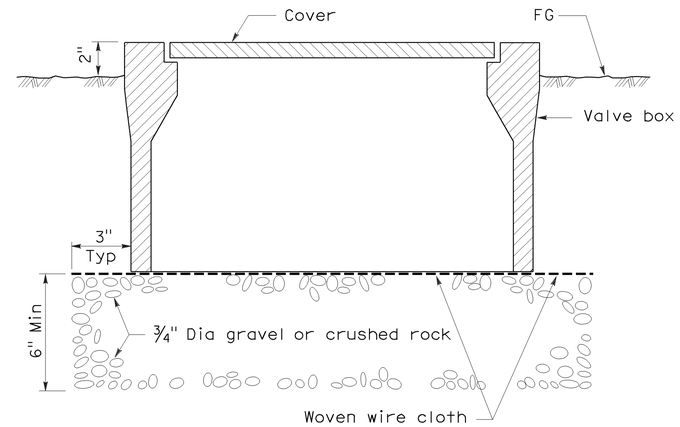

SECTION
VALVE BOX

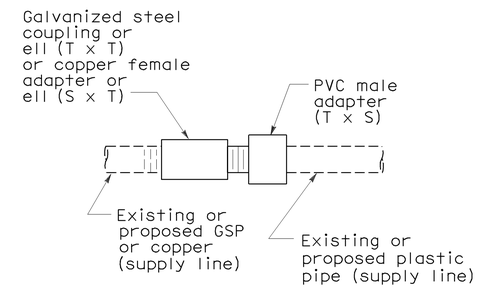

PLAN
GALVANIZED OR COPPER PIPE CONNECTION TO PLASTIC PIPE

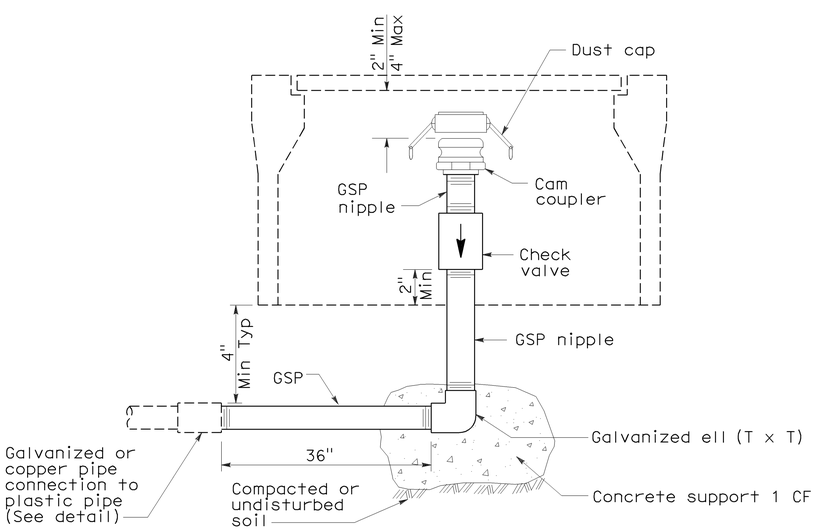

ELEVATION
CAM COUPLER ASSEMBLY

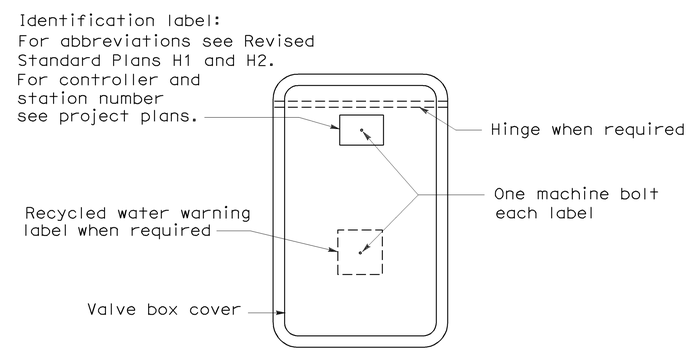

PLAN

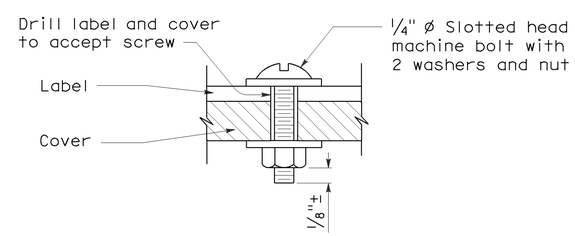

SECTION
VALVE BOX IDENTIFICATION

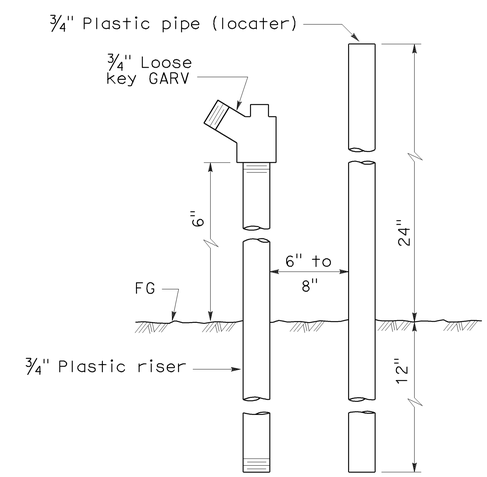

ELEVATION
FLUSH VALVE

STATE OF CALIFORNIA
DEPARTMENT OF TRANSPORTATION

PLANTING AND IRRIGATION DETAILS

NO SCALE

RSP H7 DATED JUNE 5, 2009 SUPERSEDES STANDARD PLAN H7
DATED MAY 1, 2006 - PAGE 207 OF THE STANDARD PLANS BOOK DATED MAY 2006.

REVISED STANDARD PLAN RSP H7

5-28-09

DIST	COUNTY	ROUTE	POST MILES TOTAL PROJECT	SHEET NO.	TOTAL SHEETS
03	Sac	50	R0.6/17.4	170	233

Randell D. Hiatt
REGISTERED CIVIL ENGINEER

June 6, 2008
PLANS APPROVAL DATE

REGISTERED PROFESSIONAL ENGINEER
Randell D. Hiatt
No. C50200
Exp. 6-30-09
CIVIL
STATE OF CALIFORNIA

The State of California or its officers or agents shall not be responsible for the accuracy or completeness of electronic copies of this plan sheet.

To accompany plans dated 1-4-10

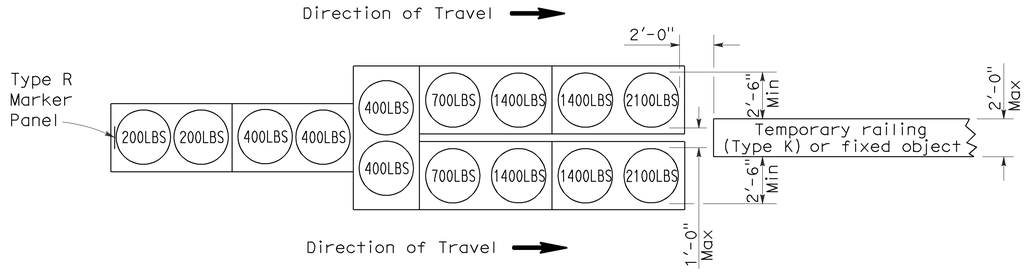

ARRAY 'TU14'

Approach speed 45 mph or more

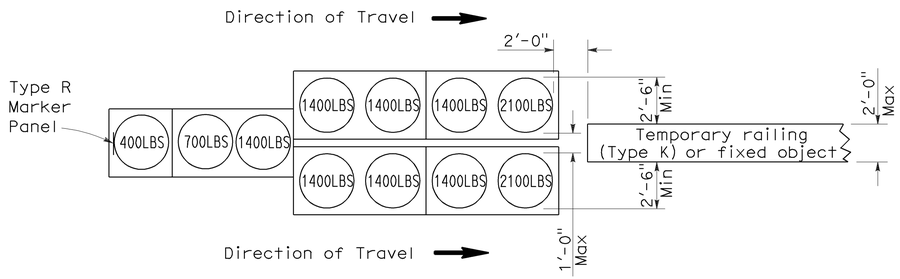

ARRAY 'TU11'

Approach speed less than 45 mph

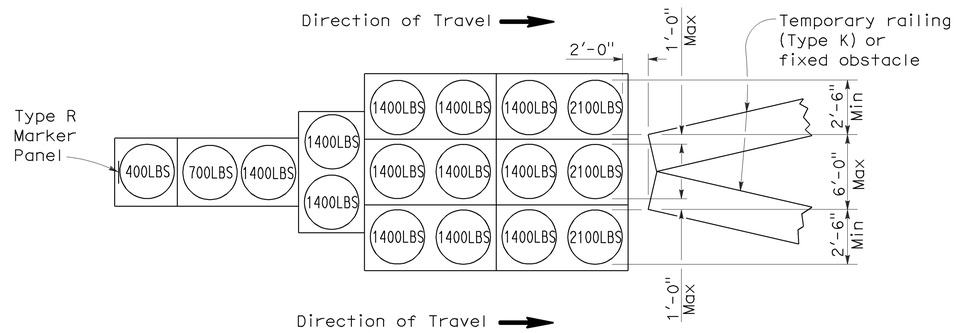

ARRAY 'TU17'

Approach speed less than 45 mph

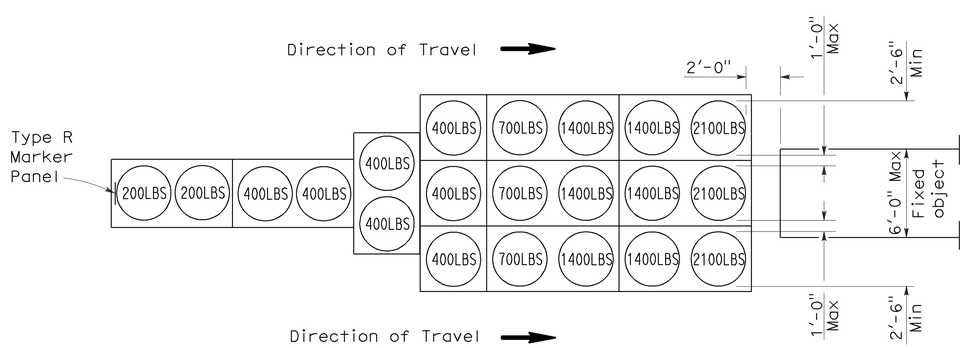

ARRAY 'TU21'

Approach speed 45 mph or more

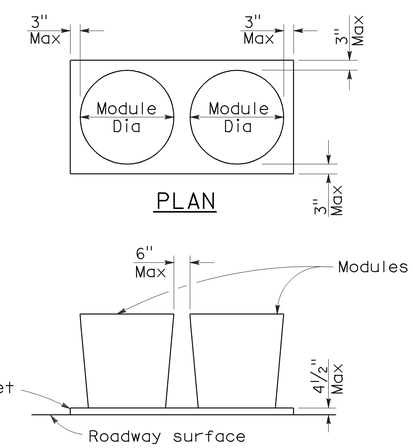

PLAN

ELEVATION

CRASH CUSHION PALLET DETAIL

See Note 7

NOTES:

1. (XXX) Indicates sand filled module location and weight of sand in pounds for each module. Module spacing is based on the greater diameter of the module.
2. All sand weights are nominal.
3. Temporary crash cushion arrays shall not encroach on the traveled way.
4. Place the top of Type R marker panel 1" below the module lid.
5. Refer to Standard Plan A73B for marker details.
6. Approach speeds indicated conform to NCHRP 350 Report criteria.
7. Use of pallets is optional.

STATE OF CALIFORNIA
DEPARTMENT OF TRANSPORTATION

TEMPORARY CRASH CUSHION, SAND FILLED (UNIDIRECTIONAL)

NO SCALE

RSP T1A DATED JUNE 6, 2008 SUPERSEDES STANDARD PLAN T1A
DATED MAY 1, 2006 - PAGE 211 OF THE STANDARD PLANS BOOK DATED MAY 2006.

REVISED STANDARD PLAN RSP T1A

2006 REVISED STANDARD PLAN RSP T1A

DIST	COUNTY	ROUTE	POST MILES TOTAL PROJECT	SHEET NO.	TOTAL SHEETS
03	Sac	50	R0.6/17.4	171	233

Randell D. Hiatt
REGISTERED CIVIL ENGINEER

June 6, 2008
PLANS APPROVAL DATE

REGISTERED PROFESSIONAL ENGINEER
Randell D. Hiatt
No. C50200
Exp. 6-30-09
CIVIL
STATE OF CALIFORNIA

The State of California or its officers or agents shall not be responsible for the accuracy or completeness of electronic copies of this plan sheet.

To accompany plans dated 1-4-10

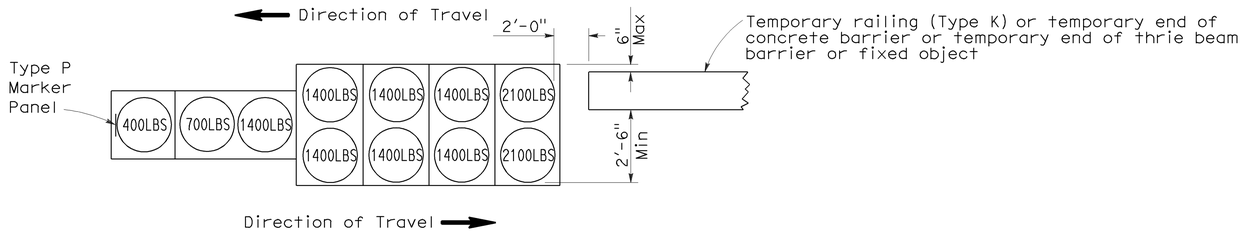

ARRAY 'TB11'

Approach speed less than 45 mph

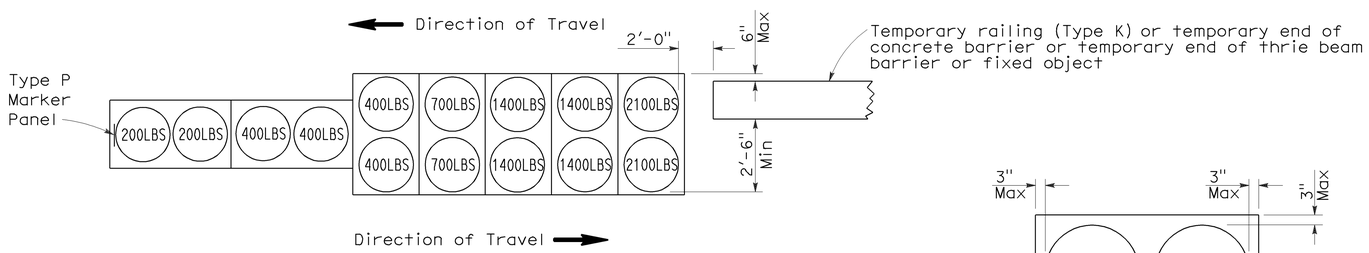

ARRAY 'TB14'

Approach speed 45 mph or more

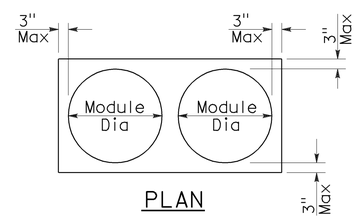

PLAN

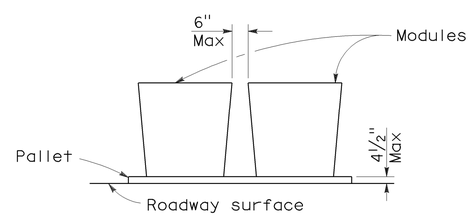

ELEVATION

CRASH CUSHION PALLET DETAIL

See Note 7

NOTES:

1. (XXX) Indicates sand filled module location and weight of sand in pounds for each module. Module spacing is based on the greater diameter of the module.
2. All sand weights are nominal.
3. Temporary crash cushion arrays shall not encroach on the traveled way.
4. Place the Type P marker panel so that the bottom of the panel rests upon the pallet.
5. Refer to Standard Plan A73B for marker details.
6. Approach speeds indicated conform to NCHRP 350 Report criteria.
7. Use of pallets is optional.

STATE OF CALIFORNIA
DEPARTMENT OF TRANSPORTATION

TEMPORARY CRASH CUSHION, SAND FILLED (BIDIRECTIONAL)

NO SCALE

RSP T1B DATED JUNE 6, 2008 SUPERSEDES STANDARD PLAN T1B
DATED MAY 1, 2006 - PAGE 212 OF THE STANDARD PLANS BOOK DATED MAY 2006.

REVISED STANDARD PLAN RSP T1B

2006 REVISED STANDARD PLAN RSP T1B

5-15-08

DIST	COUNTY	ROUTE	POST MILES TOTAL PROJECT	SHEET NO.	TOTAL SHEETS
03	Sac	50	R0.6/17.4	172	233

Randell D. Hiatt
REGISTERED CIVIL ENGINEER

June 6, 2008
PLANS APPROVAL DATE

REGISTERED PROFESSIONAL ENGINEER
Randell D. Hiatt
No. C50200
Exp. 6-30-09
CIVIL
STATE OF CALIFORNIA

The State of California or its officers or agents shall not be responsible for the accuracy or completeness of electronic copies of this plan sheet.

To accompany plans dated 1-4-10

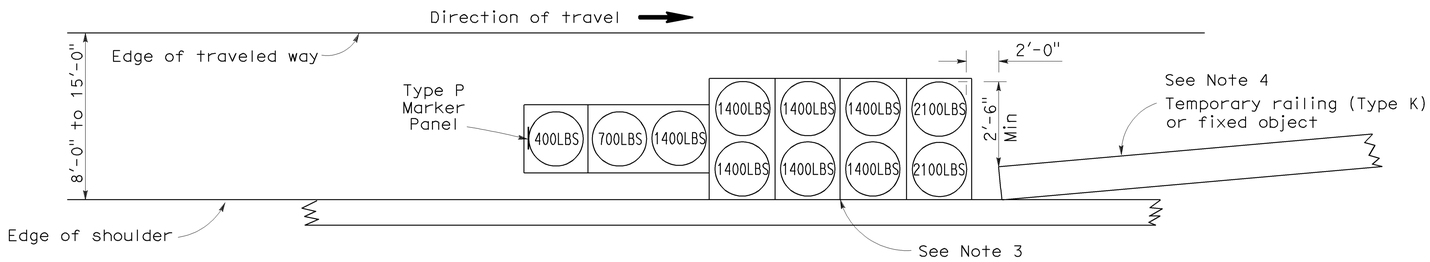

ARRAY 'TS11'

Approach speed less than 45 mph
See Note 9

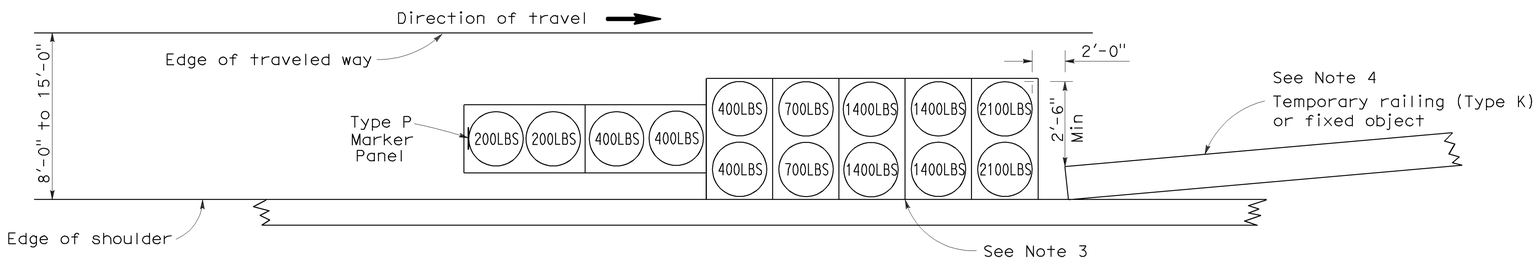

ARRAY 'TS14'

Approach speed 45 mph or more
See Note 9

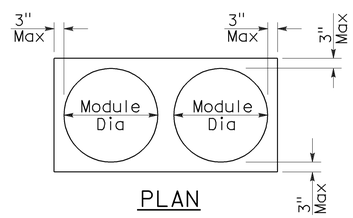

PLAN

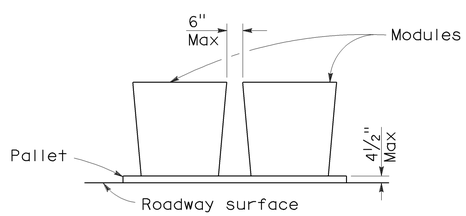

ELEVATION

CRASH CUSHION PALLET DETAIL

See Note 11

NOTES:

1. (XXX) Indicates sand filled module location and weight of sand in pounds for each module. Module spacing is based on the greater diameter of the module.
2. All sand weights are nominal.
3. The temporary crash cushion arrays shown on this plan shall be used only in locations where there will be traffic on one side of the temporary crash cushion array.
4. If the fixed object or approach end of the temporary railing is less than 15'-0" from the edge of traveled way, a temporary crash cushion is required in a construction or work zone.
5. Temporary crash cushion arrays shall not encroach on the traveled way.
6. Arrays for median shoulders shall conform to details shown on this plan for outside shoulders.
7. Place the Type P marker panel so that the bottom of the panel rests upon the pallet and faces traffic.
8. Refer to Standard Plan A73B for marker details.
9. For shoulder widths less than 8'-0", appropriate approved crash cushion protection, other than sand filled modules, shall be provided at fixed objects and at approach ends of temporary railing. The specific type of crash cushion shall be as shown on the project plans or as specified in the Special Provisions, or if not shown on the project plans or specified in the Special Provisions, shall be as approved by the Engineer.
10. Approach speeds indicated conform to NCHRP 350 Report criteria.
11. Use of pallets is optional.

STATE OF CALIFORNIA
DEPARTMENT OF TRANSPORTATION

TEMPORARY CRASH CUSHION, SAND FILLED (SHOULDER INSTALLATIONS)

NO SCALE

RSP T2 DATED JUNE 6, 2008 SUPERSEDES STANDARD PLAN T2
DATED MAY 1, 2006 - PAGE 213 OF THE STANDARD PLANS BOOK DATED MAY 2006.

REVISED STANDARD PLAN RSP T2

2006 REVISED STANDARD PLAN RSP T2

5-15-08

DIST	COUNTY	ROUTE	POST MILES TOTAL PROJECT	SHEET NO.	TOTAL SHEETS
03	Sac	50	R0.6/17.4	173	233

LICENSED LANDSCAPE ARCHITECT

April 3, 2009
PLANS APPROVAL DATE

LICENSED LANDSCAPE ARCHITECT — Robert B. Schott 3625 — Registration Expiration 11-30-10 Renewal Date — 2-25-09 Date — STATE OF CALIFORNIA

The State of California or its officers or agents shall not be responsible for the accuracy or completeness of electronic copies of this plan sheet.

To accompany plans dated 1-4-10

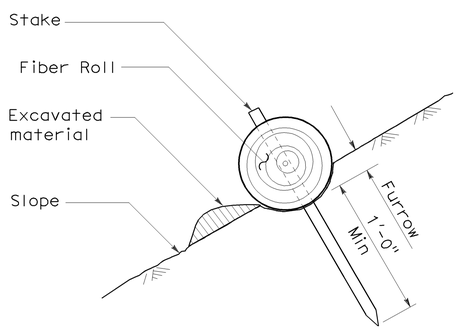

SECTION

TEMPORARY FIBER ROLL (TYPE 1)

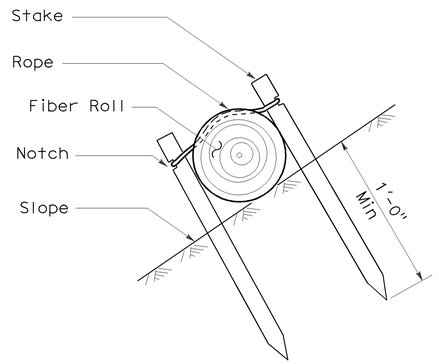

SECTION

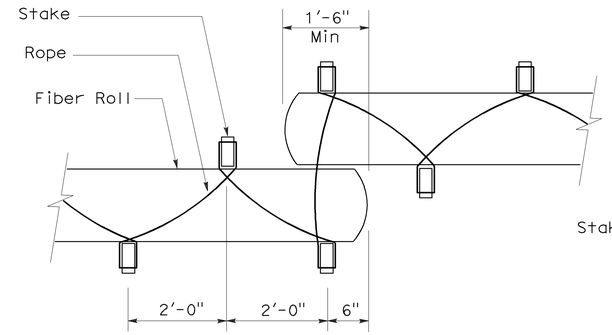

PLAN

TEMPORARY FIBER ROLL (TYPE 2)

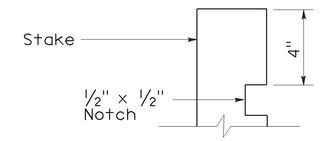

ELEVATION

STAKE NOTCH DETAIL

NOTES:

1. Temporary fiber roll spacing varies depending upon slope inclination.
2. Installations shown in the perspectives are for slope inclination of 10:1 and steeper.

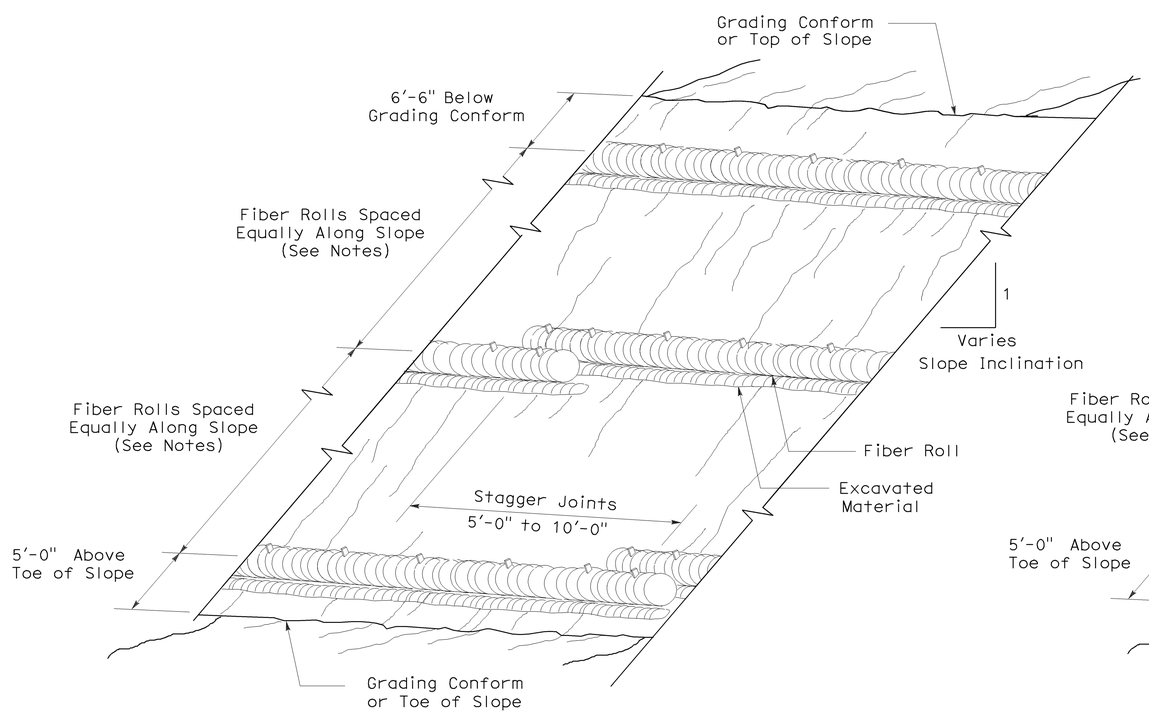

PERSPECTIVE

TEMPORARY FIBER ROLL (TYPE 1)

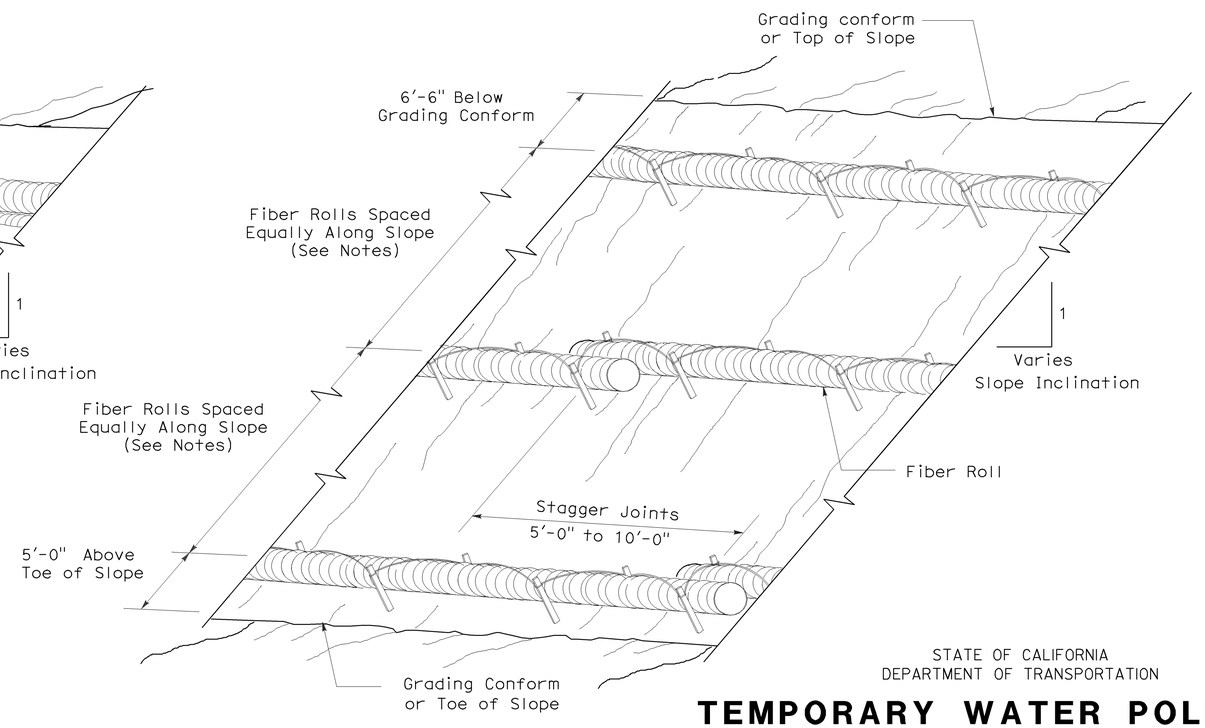

PERSPECTIVE

TEMPORARY FIBER ROLL (TYPE 2)

STATE OF CALIFORNIA
DEPARTMENT OF TRANSPORTATION

TEMPORARY WATER POLLUTION CONTROL DETAILS (TEMPORARY FIBER ROLL)

NO SCALE

RSP T56 DATED APRIL 3, 2009 SUPERSEDES STANDARD PLAN T56
DATED MAY 1, 2006 - PAGE 232 OF THE STANDARD PLANS BOOK DATED MAY 2006.

REVISED STANDARD PLAN RSP T56

2006 REVISED STANDARD PLAN RSP T56

2-23-09

DIST	COUNTY	ROUTE	POST MILES TOTAL PROJECT	SHEET NO.	TOTAL SHEETS
03	Sac	50	R0.6/17.4	174	233

Robert B Schott
LICENSED LANDSCAPE ARCHITECT

August 15, 2008
PLANS Approval DATE

The State of California or its officers or agents shall not be responsible for the accuracy or completeness of electronic copies of this plan sheet.

LICENSED LANDSCAPE ARCHITECT
Robert B. Schott 3625
Signature
11-04-08
Renewal Date
08-11-08
Date
STATE OF CALIFORNIA

To accompany plans dated 1-4-10

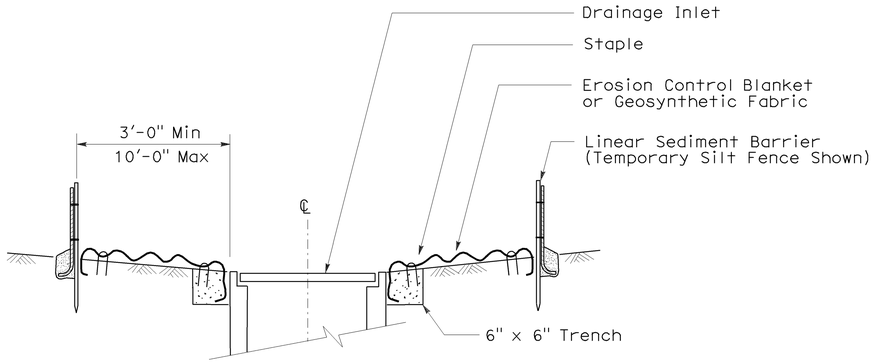

SECTION A-A

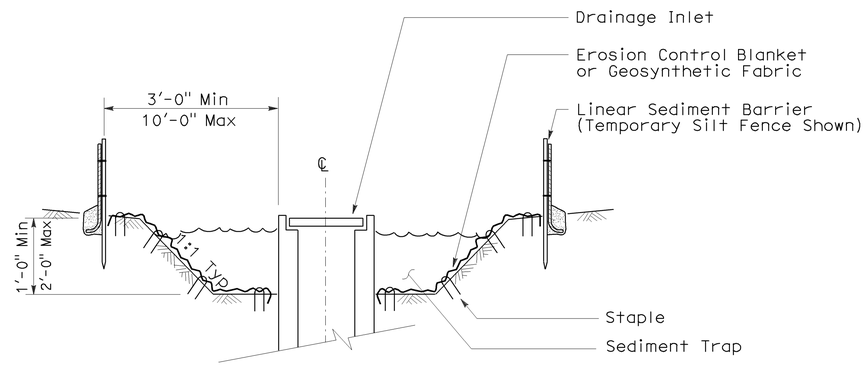

SECTION B-B

NOTES:

1. See Standard Plan T51 for Temporary Silt Fence.
2. Dimensions may vary to fit field conditions.

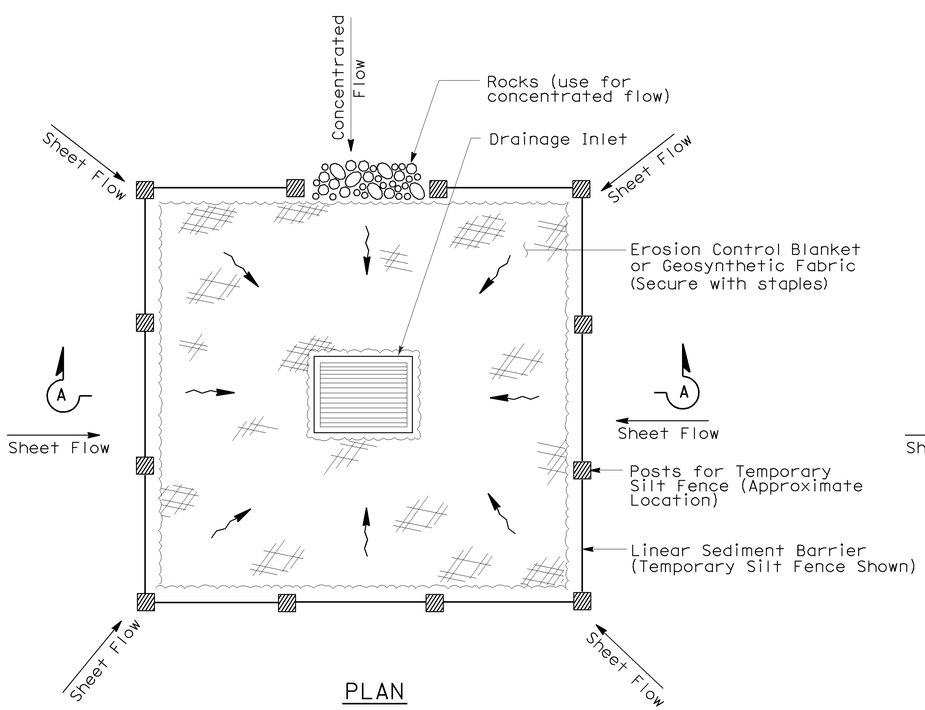

PLAN

TEMPORARY DRAINAGE INLET PROTECTION (TYPE 1)

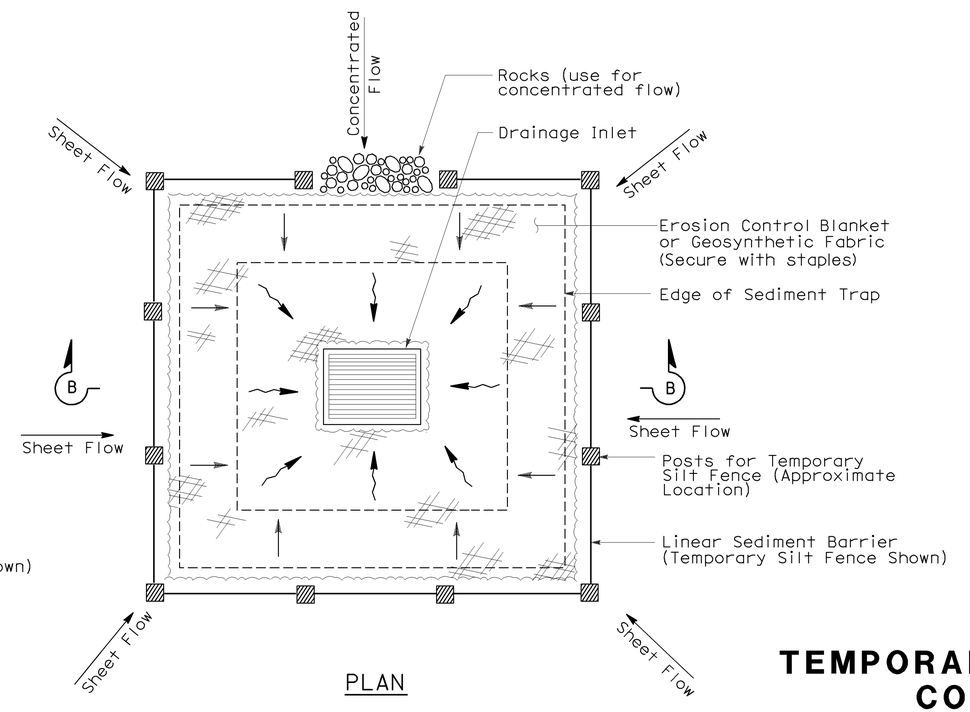

PLAN

TEMPORARY DRAINAGE INLET PROTECTION (TYPE 2) (EXCAVATED SEDIMENT TRAP)

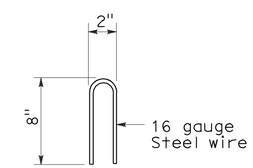

STAPLE DETAIL

STATE OF CALIFORNIA
DEPARTMENT OF TRANSPORTATION

TEMPORARY WATER POLLUTION CONTROL DETAILS (TEMPORARY DRAINAGE INLET PROTECTION)

NO SCALE

NSP T61 DATED AUGUST 15, 2008 SUPPLEMENTS THE STANDARD PLANS BOOK DATED MAY 2006.

NEW STANDARD PLAN NSP T61

2006 NEW STANDARD PLAN NSP T61

7-11-08

DIST	COUNTY	ROUTE	POST MILES TOTAL PROJECT	SHEET NO.	TOTAL SHEETS
03	Sac	50	R0.6/17.4	175	233

LICENSED LANDSCAPE ARCHITECT

August 15, 2008
PLANS APPROVAL DATE

The State of California or its officers or agents shall not be responsible for the accuracy or completeness of electronic copies of this plan sheet.

LICENSED LANDSCAPE ARCHITECT — Robert B. Schott — Signature — 11-04-08 Renewal Date — 08-11-08 Date — STATE OF CALIFORNIA

To accompany plans dated 1-4-10

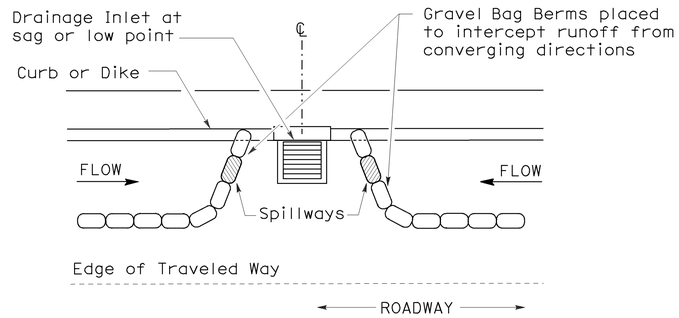

PLAN

CONFIGURATION FOR SAG POINT INLET (GRAVEL BAG BERM)

GRAVEL BAG BERM (TYPE 3A) SPACING TABLE

SLOPE OF ROADWAY (PERCENT)	1 to 3.9	4 to 5.9	6 to 7.9	8 to 10	10+
INTERVAL BETWEEN BERM	100′	75′	50′	25′	12′

For slope of less than 1%, install barriers only if erosion/sediment is prevalent

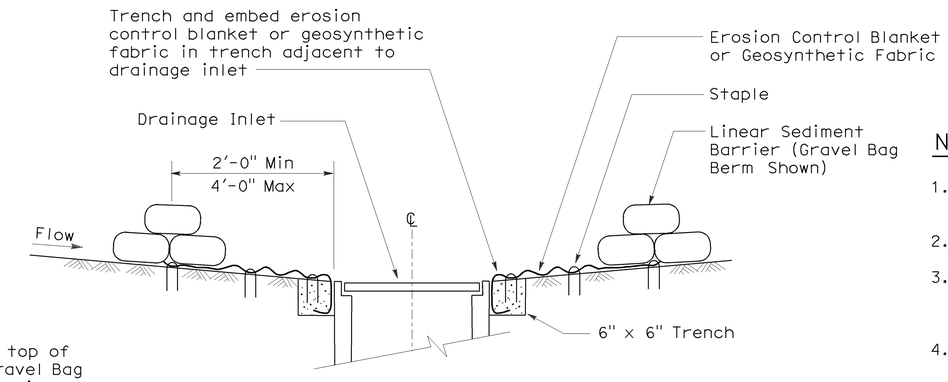

SECTION A-A

NOTES:

1. Place safety cones adjacent to drainage inlet protection.
2. Dimensions may vary to fit field conditions.
3. Install a minimum of 3 gravel bag berms upstream of each drainage inlet to be protected.
4. Position erosion control blanket or geosynthetic fabric at edge of concrete apron and secure in trench.
5. Erosion control blanket or geosynthetic fabric is not required if the area adjacent to the drainage inlet is vegetated or paved.

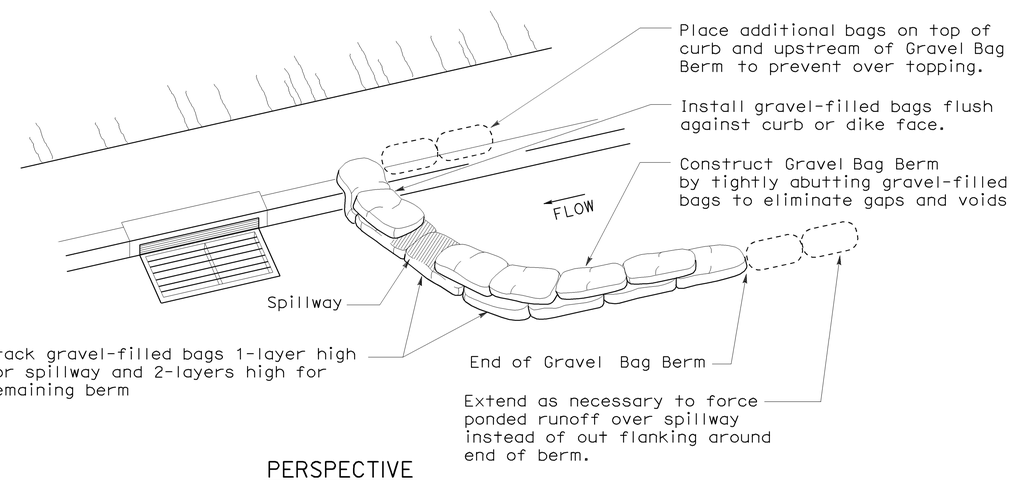

PERSPECTIVE

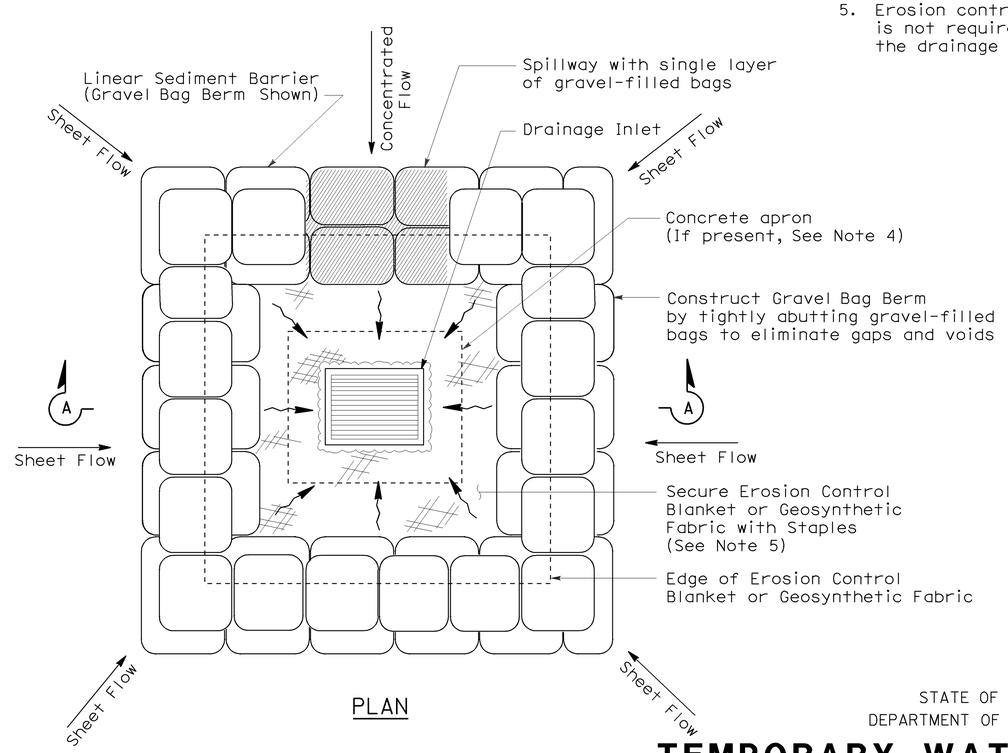

PLAN

TEMPORARY DRAINAGE INLET PROTECTION (TYPE 3B)

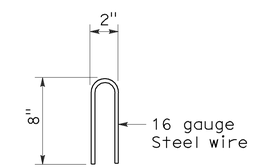

STAPLE DETAIL

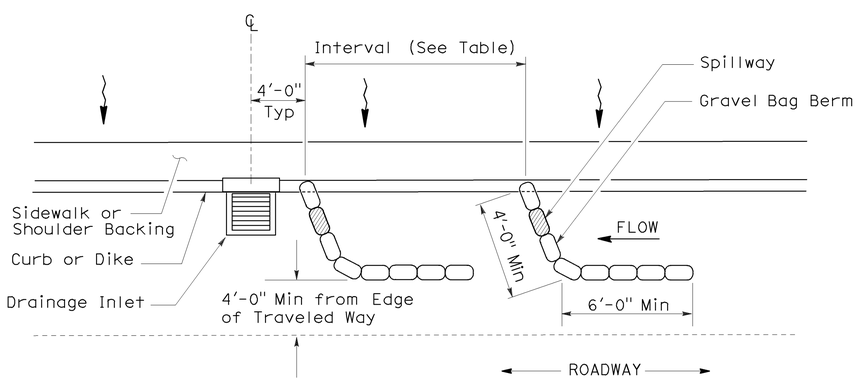

PLAN

TEMPORARY DRAINAGE INLET PROTECTION (TYPE 3A) (GRAVEL BAG BERM)

STATE OF CALIFORNIA
DEPARTMENT OF TRANSPORTATION

TEMPORARY WATER POLLUTION CONTROL DETAILS (TEMPORARY DRAINAGE INLET PROTECTION)

NO SCALE

NSP T62 DATED AUGUST 15, 2008 SUPPLEMENTS THE STANDARD PLANS BOOK DATED MAY 2006.

NEW STANDARD PLAN NSP T62

2006 NEW STANDARD PLAN NSP T62

7-11-08

DIST	COUNTY	ROUTE	POST MILES TOTAL PROJECT	SHEET NO.	TOTAL SHEETS
03	Sac	50	R0.6/17.4	176	233

LICENSED LANDSCAPE ARCHITECT

August 15, 2008
PLANS APPROVAL DATE

The State of California or its officers or agents shall not be responsible for the accuracy or completeness of electronic copies of this plan sheet.

LICENSED LANDSCAPE ARCHITECT — Robert B. Schott — Signature — 11-04-08 Renewal Date — 08-11-08 Date — STATE OF CALIFORNIA

To accompany plans dated 1-4-10

FLEXIBLE SEDIMENT BARRIER SPACING TABLE

SLOPE OF ROADWAY (PERCENT)	0 to 0.9	1 to 1.9	2 to 2.9	3 to 4	5+
INTERVAL BETWEEN BARRIERS	50′	35′	30′	25′	20′
ANGLE FROM FACE OF CURB	70°	70°	70°	45°	45°
SUGGESTED BARRIER LENGTH	6′	6′	6′	6′	6′

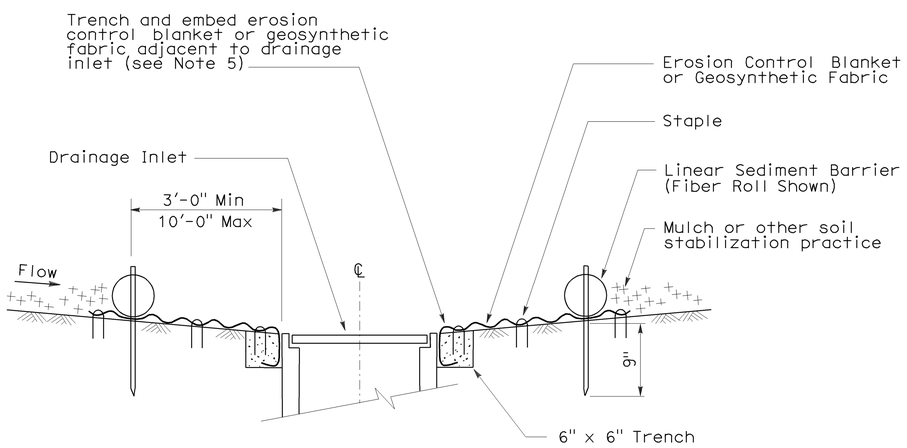

SECTION A-A

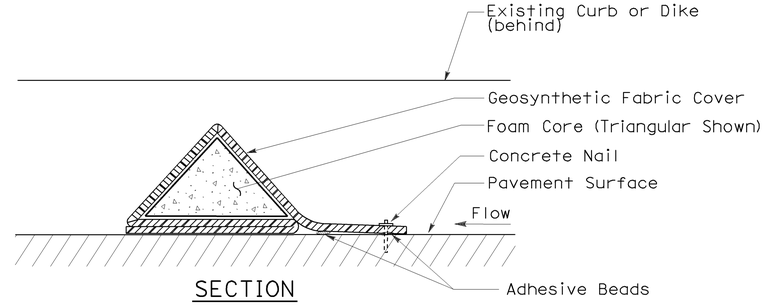

SECTION

FLEXIBLE SEDIMENT BARRIER DETAIL (FOAM BARRIER SHOWN)

NOTES:

1. See Standard Plan T51 for Temporary Silt Fence.
2. Dimensions may vary to fit field conditions.
3. Install a minimum of 3 flexible sediment barriers upstream of each drainage inlet to be protected.
4. Position erosion control blanket or geosynthetic fabric at edge of concrete apron and secure in trench.
5. Erosion control blanket or geosynthetic fabric is not required if the area adjacent to the drainage inlet is vegetated.

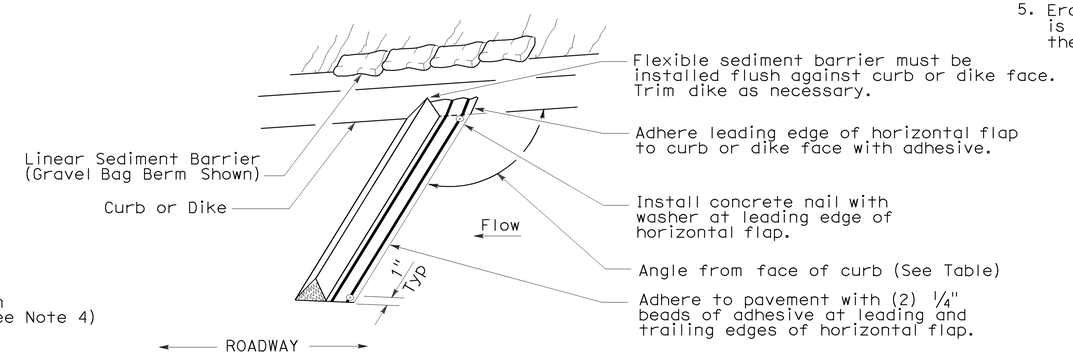

PERSPECTIVE

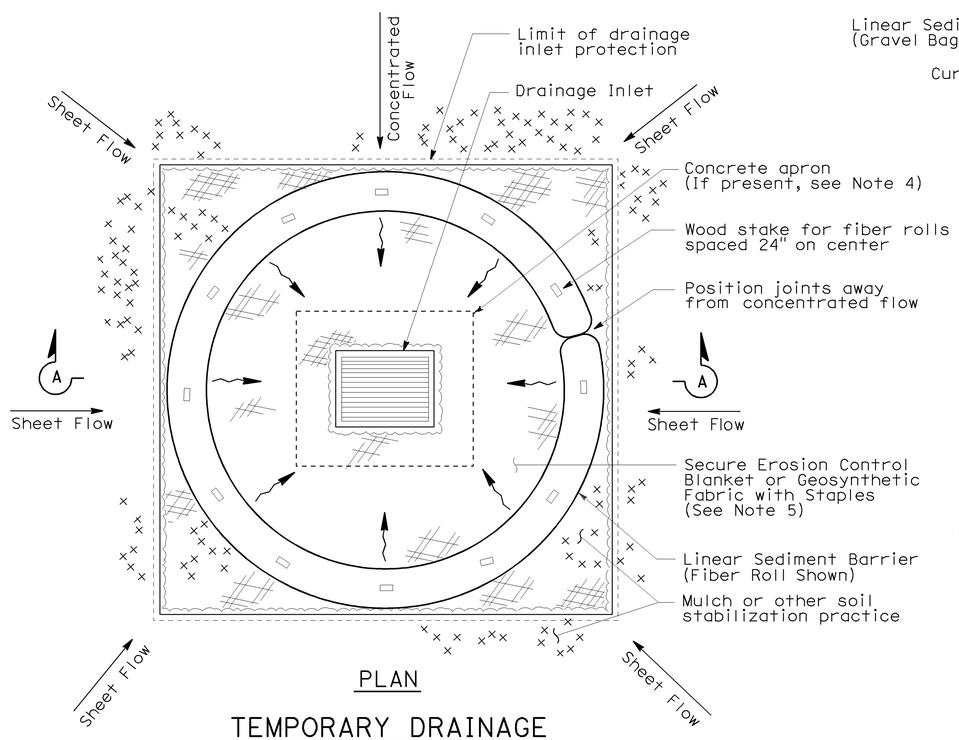

PLAN

TEMPORARY DRAINAGE INLET PROTECTION (TYPE 4A)

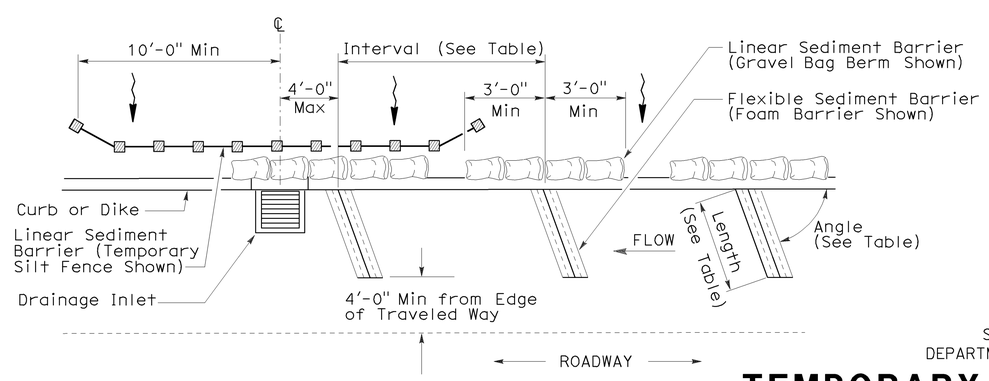

PLAN

TEMPORARY DRAINAGE INLET PROTECTION (TYPE 4B) FLEXIBLE SEDIMENT BARRIER

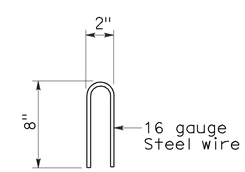

STAPLE DETAIL

STATE OF CALIFORNIA
DEPARTMENT OF TRANSPORTATION

TEMPORARY WATER POLLUTION CONTROL DETAILS (TEMPORARY DRAINAGE INLET PROTECTION)

NO SCALE

NSP T63 DATED AUGUST 15, 2008 SUPPLEMENTS THE STANDARD PLANS BOOK DATED MAY 2006.

NEW STANDARD PLAN NSP T63

2006 NEW STANDARD PLAN NSP T63

DIST	COUNTY	ROUTE	POST MILES TOTAL PROJECT	SHEET NO.	TOTAL SHEETS
03	Sac	50	R0.6/17.4	177	233

LICENSED LANDSCAPE ARCHITECT

August 15, 2008
PLANS APPROVAL DATE

LICENSED LANDSCAPE ARCHITECT — Robert B. Schott 3625 — Signature — 11-04-08 Renewal Date — 08-11-08 Date — STATE OF CALIFORNIA

The State of California or its officers or agents shall not be responsible for the accuracy or completeness of electronic copies of this plan sheet.

To accompany plans dated 1-4-10

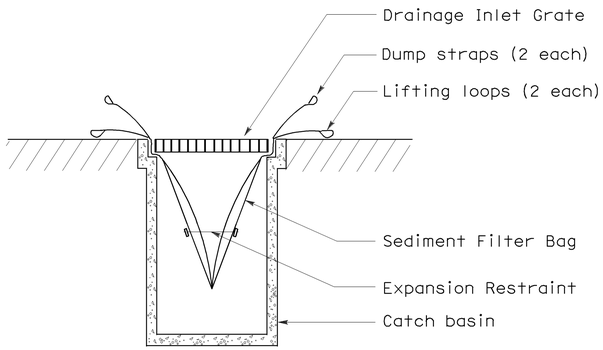

SECTION B-B

SEDIMENT FILTER BAG DETAIL

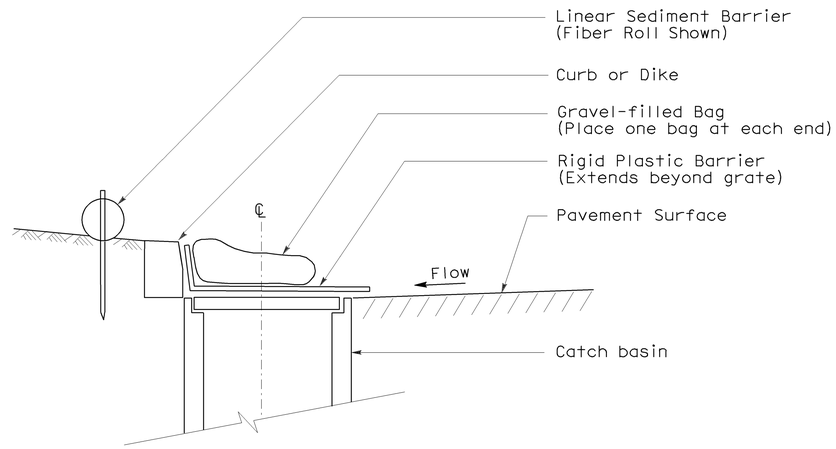

SECTION

TEMPORARY DRAINAGE INLET PROTECTION (TYPE 6A) (CATCH BASIN WITH GRATE)

NOTES:

1. See Standard Plan T51 for Temporary Silt Fence.
2. Dimensions may vary to fit field conditions.

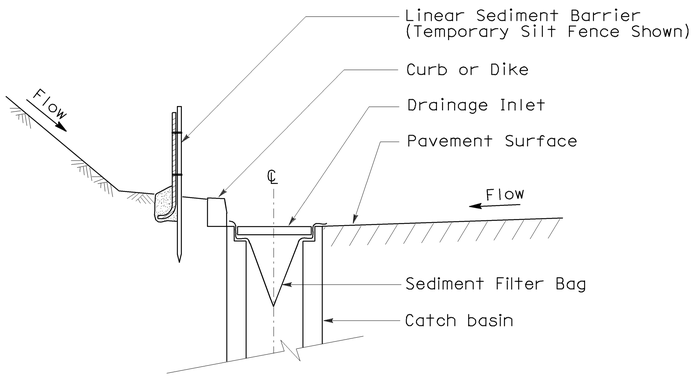

SECTION A-A

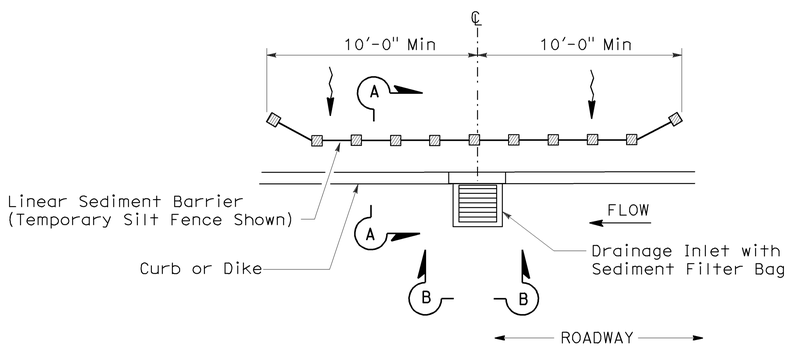

PLAN

TEMPORARY DRAINAGE INLET PROTECTION (TYPE 5) (SEDIMENT FILTER BAG)

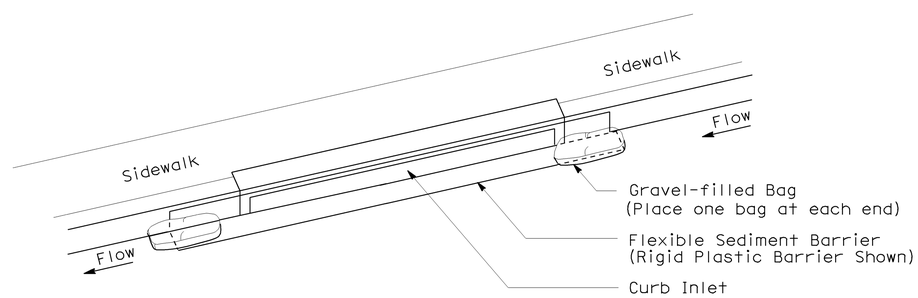

PERSPECTIVE

TEMPORARY DRAINAGE INLET PROTECTION (TYPE 6B) (CURB INLET WITHOUT GRATE)

STATE OF CALIFORNIA
DEPARTMENT OF TRANSPORTATION

TEMPORARY WATER POLLUTION CONTROL DETAILS (TEMPORARY DRAINAGE INLET PROTECTION)

NO SCALE

NSP T64 DATED AUGUST 15, 2008 SUPPLEMENTS
THE STANDARD PLANS BOOK DATED MAY 2006.

NEW STANDARD PLAN NSP T64

2006 NEW STANDARD PLAN NSP T64

7-11-08

DIST	COUNTY	ROUTE	POST MILES TOTAL PROJECT	SHEET NO.	TOTAL SHEETS
03	Sac	50	R0.6/17.4	178	233

REGISTERED CIVIL ENGINEER

October 5, 2007
PLANS APPROVAL DATE

REGISTERED PROFESSIONAL ENGINEER Efthymios Delis No. C51434 Exp. 6-30-08 CIVIL STATE OF CALIFORNIA

The State of California or its officers or agents shall not be responsible for the accuracy or completeness of electronic copies of this plan sheet.

To accompany plans dated 1-4-10

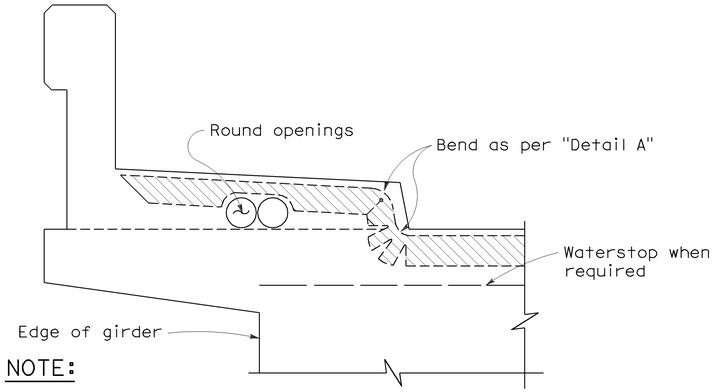

NOTE:

Type "B" seal shown. Type "A" seals to comform to the general path of seal shown, cuts for bending not required. Bend Type "A" seals 3" up into curb or barrier rail on only the low end of the seal.

CONCRETE BARRIER AND SIDEWALK

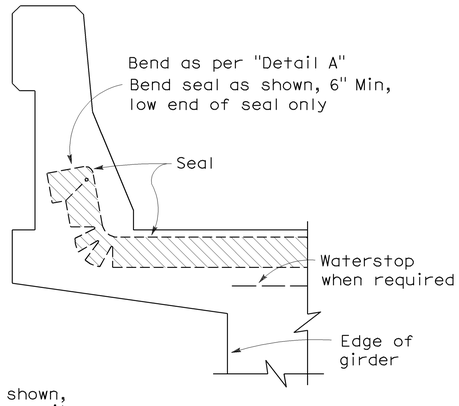

CONCRETE BARRIER

JOINT SEALS DETAILS

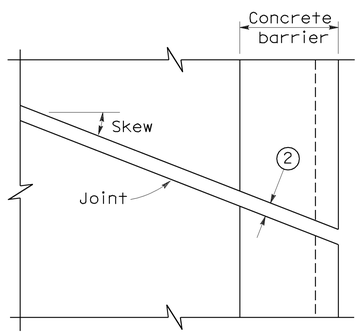

PLAN OF JOINT (SKEW ≤ 20°)

Min ℄ radius to be 4 times uncompressed width of seal or as recommended by the manufacturer, whichever is greater

In lieu of saw cutting, this area may be blocked out and reconstructed to match saw cutting on both sides.

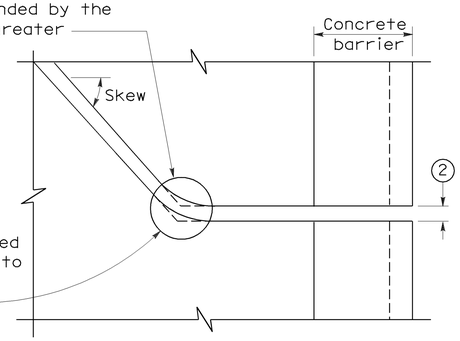

PLAN OF JOINT (SKEW > 20°)

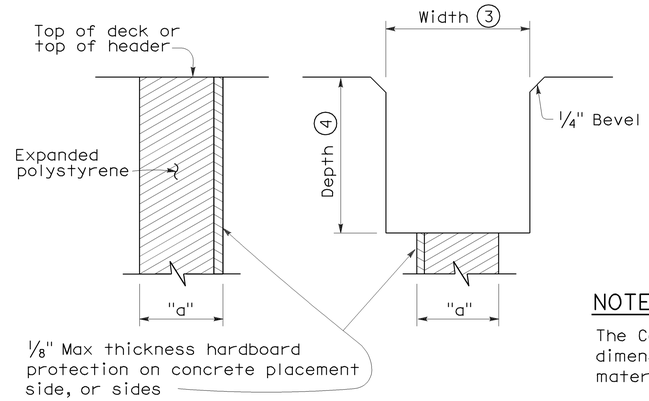

FORMING DETAIL SAWCUT DETAIL

NOTE:

The Contractor shall verify all controlling field dimensions before ordering or fabricatiing any material.

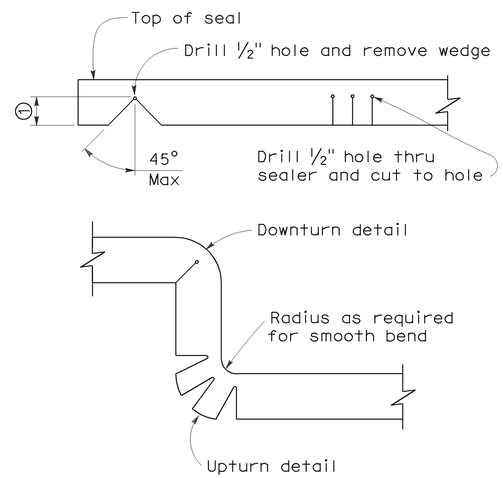

DETAIL A

NOTES:

1. Make smooth cuts from the bottom of seal to 1½" clear of top leaving at least one complete cell between the top of the cut and top of the seal. When necessary cut back of seal to clear conduit and round openings.
2. Opening in barrier to match width of sawn deck joint.
3. Sawcut groove widths shall be as ordered by the Engineer.
4. Depth of sawcut: Type A - Depth to be 2" minimum.
   Type B - Depth to be equal to or greater than the depth of seal measured along the contact surface, when compressed to minimum width position (W_2) plus dimensions shown.
5. MR (movement rating) as shown on other plan sheets.
6. Other depths must be approved by the Engineer.

DIMENSIONS "a" OF JOINT REQUIRED

Movement Rating (MR) 5	Bridge Type	"a" Dimension Deck Concrete Placed		
		Winter	Fall-Spring	Summer
2"	All except CIP/PS	1½"	1¼"	¾"
	CIP/PS	1¼"	1"	½"
1½"	All except CIP/PS	1¼"	1"	½"
	CIP/PS	1"	¾"	½"
1"	All except CIP/PS	1"	¾"	½"
	CIP/PS	¾"	½"	½"
½"	All except CIP/PS	¾"	¾"	½"
	CIP/PS	½"	½"	½"

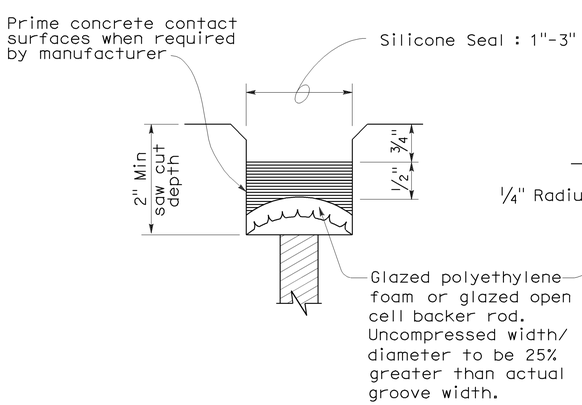

TYPE A SEAL

Movement rating : Silicone = 1" Max

TYPE AL SEAL

Longitudinal joints only

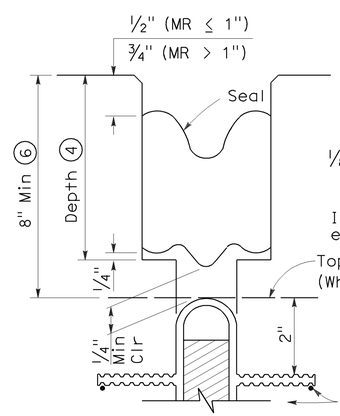

TYPE B JOINT SEAL IN MINIMUM WIDTH POSITION (W_2)

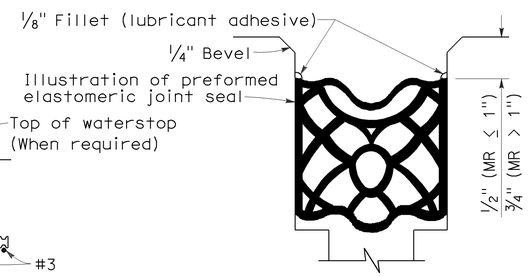

TYPE B SEAL

Movement Rating ≤ 2"

STATE OF CALIFORNIA
DEPARTMENT OF TRANSPORTATION

JOINT SEALS (MAXIMUM MOVEMENT RATING = 2")

NO SCALE

RSP B6-21 DATED OCTOBER 5, 2007 SUPERSEDES STANDARD PLAN B6-21 DATED MAY 1, 2006 - PAGE 258 OF THE STANDARD PLANS BOOK DATED MAY 2006.

REVISED STANDARD PLAN RSP B6-21

2006 REVISED STANDARD PLAN RSP B6-21

5-8-07

DIST	COUNTY	ROUTE	POST MILES TOTAL PROJECT	SHEET NO.	TOTAL SHEETS
03	Sac	50	R0.6/17.4	179	233

REGISTERED ELECTRICAL ENGINEER

October 5, 2007
PLANS APPROVAL DATE

REGISTERED PROFESSIONAL ENGINEER
Jeffery G. McRae
No. E14512
Exp. 6-30-08
ELECTRICAL
STATE OF CALIFORNIA

The State of California or its officers or agents shall not be responsible for the accuracy or completeness of electronic copies of this plan sheet.

To accompany plans dated 1-4-10

ELECTROLIERS

STANDARD TYPES
15, 15D
15 STRUCTURE
21, 21D STRUCTURE
30
31
32
35
36-20A

High mast light pole

Double Arm lighting standard

Existing electrolier

Electrolier foundation (Future installation)

NOTES:

1. Luminaires shall be 310 W HPS when installed on Type 21, 21D, 30, 31, 32, 35 and 36-20A Standards, unless otherwise specified. Luminaires shall be 200 W HPS when installed on other type standards or poles, unless otherwise specified.
2. Luminaires shall be the cutoff type, ANSI Type Ⅲ medium cutoff lighting distribution, unless otherwise specified.
3. Variations noted adjacent to symbol on project plans.

Electrolier (see project notes or project plans)

Luminaire on wood pole

STANDARD NOTES:

- AB — Abandon. If applied to conduit, remove conductors.
- BC — Install pull box in existing conduit run.
- BP — Pedestrian barricade, type as indicated on plan.
- CB — Install conduit into existing pull box.
- CC — Connect new and existing conduit. Remove existing conductors and install conductors as indicated.
- CF — Conduit to remain for future use. Remove conductors. Install pull wire or rope.
- DH — Detector handhole.
- FA — Foundation to be abandoned.
- IS — Install sign on signal mast arm.
- NS — No slip base on standard.
- PEC — Photoelectric control.
- PEU — Photoelectric unit.
- RC — Equipment or material to be removed and become the property of the Contractor.
- RE — Remove electrolier, fuses and ballast. Tape ends of conductors.
- RL — Relocate equipment.
- RR — Remove and reuse equipment.
- RS — Remove and salvage equipment.
- SC — Splice new to existing conductors.
- SD — Service disconnect.
- SF — Standard to remain for future use. Remove luminaire, pole conductors, fuses and ballast.
- TSP — Telephone service point.

ABBREVIATIONS AND EQUIPMENT DESIGNATIONS

PROPOSED	EXISTING	
BBS	bbs	Battery backup system
BC	bc	Bolt circle
C	C	Conduit
CCTV	cctv	Closed circuit television
CKT	ckt	Circuit
CMS	cms	Changeable message sign
DLC	dlc	Loop detector lead-in cable
EMS	ems	Extinguishable message sign
EVC	evc	Emergency vehicle cable
EVD	evd	Emergency vehicle detector
FB	fb	Flashing beacon
FBCA	fbca	Flashing beacon control assembly
FBS	fbs	Flashing beacon with slip base
FO	fo	Fiber optic
G	G	Ground (Equipment Grounding Conductor)
GFCI	GFCI	Ground fault circuit interrupt
HAR	har	Highway advisory radio
HEX	hex	Hexagonal
HPS	hps	High pressure sodium
IISNS	iisns	Internally illuminated street name sign
ISL	isl	Induction sign lighting
LED	led	Light emitting diode
LMA	lma	Luminaire mast arm
LPS	lps	Low pressure sodium
LTG	ltg	Lighting
LUM	lum	Luminaire
MAT	mat	Mast arm mounting vehicle signal faces, top attachment
MAS	mas	Mast arm mounting vehicle signal faces, side attachment
MAS-4A	mas-4A	Mast arm mounting vehicle signal faces, side attachment - 4 signal section
MAS-4B	mas-4B	
MAS-4C	mas-4C	
MAS-5A	mas-5A	Mast arm mounting vehicle signal faces, side attachment - 5 signal section
MAS-5B	mas-5B	
MC	mc	Mercury contactor
M/M	m/m	Multiple to multiple transformer
MT	mt	Conduit with pull wire or rope only
MTG	mtg	Mounting
	mv	Mercury vapor lighting fixture
N	N	Neutral (Grounded Conductor)
NC	NC	Normally closed
NO	NO	Normally open
PB	pb	Pull box
PEC	pec	Photoelectric control (Type Ⅰ, Ⅱ, Ⅲ, Ⅳ or Ⅴ as shown)
PED	ped	Pedestrian
PEU	peu	Photoelectric unit
PPB	ppb	Pedestrian push button
RL		Relocated equipment
RM	rm	Ramp metering
SB	sb	Slip base
SIC	sic	Signal interconnect cable
SIG	sig	Signal
SMA	sma	Signal mast arm
SNS	sns	Street name sign
SP	sp	Service point
TDC	tdc	Telephone demarcation cabinet
TMS	tms	Traffic monitoring station
TOS	tos	Traffic Operations System
VEH	veh	Vehicle
XFMR	xfmr	Transformer
COMM	comm	Communication
RWIS	rwis	Roadway weather information system

SOFFIT AND WALL MOUNTED LUMINAIRES

Pendant, 70 W HPS unless otherwise specified.

Flush, 70 W HPS unless otherwise specified.

Wall surface, 70 W HPS unless otherwise specified.

Existing soffit or wall luminaire to remain unmodified.

Existing soffit or wall luminaire to be modified as specified.

NOTE:

Arrow indicates "street side" of luminaire.

STATE OF CALIFORNIA
DEPARTMENT OF TRANSPORTATION

ELECTRICAL SYSTEMS (SYMBOLS AND ABBREVIATIONS)

NO SCALE

RSP ES-1A DATED OCTOBER 5, 2007 SUPERSEDES STANDARD PLAN ES-1A
DATED MAY 1, 2006 - PAGE 400 OF THE STANDARD PLANS BOOK DATED MAY 2006.

REVISED STANDARD PLAN RSP ES-1A

2006 REVISED STANDARD PLAN RSP ES-1A

DIST	COUNTY	ROUTE	POST MILES TOTAL PROJECT	SHEET NO.	TOTAL SHEETS
03	Sac	50	R0.6/17.4	180	233

REGISTERED ELECTRICAL ENGINEER

October 5, 2007
PLANS APPROVAL DATE

REGISTERED PROFESSIONAL ENGINEER Jeffery G. McRae No. E14512 Exp. 6-30-08 ELECTRICAL STATE OF CALIFORNIA

The State of California or its officers or agents shall not be responsible for the accuracy or completeness of electronic copies of this plan sheet.

To accompany plans dated 1-4-10

CONDUIT

PROPOSED	EXISTING	
		Lighting Conduit, unless otherwise indicated or noted
		Traffic signal conduit
C	c	Communication conduit
T	t	Telephone conduit
F	f	Fire alarm conduit
FO	fo	Fiber optic conduit
		Conduit termination (RSP ES-9A C)
R	r	Conduit riser in/on structure or service pole

SERVICE EQUIPMENT

PROPOSED	EXISTING	
OH	oh	Overhead lines
U	U	Wood pole "U" indicates utility owned
		Pole guy with anchor
		Utility transformer - ground mounted
III		Service equipment enclosure type
		Service equipment enclosure door indicates front of enclosure
T	t	Telephone demarcation cabinet

POLE-MOUNTED SERVICE DESIGNATION

Type of installation

TYPE H SERVICE - 28'-10" ← Pole height above grade

ILLUMINATED OVERHEAD SIGN

PROPOSED	EXISTING	
		Overhead sign - Single post
		Overhead sign - Two post
		Overhead sign - Mounted on structure
		Overhead sign with electrolier

SIGNAL EQUIPMENT

PROPOSED	EXISTING	
		Pedestrian signal face
		Pedestrian push button post
		Pedestrian barricade
		Vehicle signal face (with backplate, 3-Section: red, yellow and green)
		Vehicle signal face with angle visors
PV	PV	Modifications of basic symbols: "L" indicates all non-arrow sections louvered "LG" indicates louvered green section only "PV" indicates 12" programmed visibility sections "8" indicates all 8" sections (only when specified)
		Type 15TS and Vehicle signal face
		Vehicle signal face with red, yellow and green left arrow sections
		Vehicle signal face with red and yellow sections and up green arrow
		Vehicle signal face (5 Section) with red, yellow and green sections and yellow and green right arrows
		Type 1 Standard and attached vehicle signal faces
		Standard with signal mast arm only and attached vehicle signal faces and internally illuminated street name sign
		Type 33 Standard, Left-turn vehicle signal face and sign
		Standard with luminaire and signal mast arms and attached vehicle signal faces
		Cantilever flashing beacon Type 9 Frame, with a sign unless otherwise specified or indicated
		Type 15-FBS Standard with two vehicle signal face sections with lens, backplate and visor with a sign
R	Y	Flashing beacon. One vehicle signal face section with lens, backplate and visor. "R" indicates red indication, "Y" indicates yellow indication
		Controller assembly. Door indicates front of cabinet

SIGNAL EQUIPMENT Cont

PROPOSED	EXISTING	
		Guard post
		Type 1 Standard with "Meter On" sign
		Emergency Vehicle detector

NOTES:

1. All signal sections shall be 12" unless shown otherwise.
2. Signal heads shall be provided with backplates unless shown otherwise.
3. Signal indication shall be LED.

STATE OF CALIFORNIA
DEPARTMENT OF TRANSPORTATION

ELECTRICAL SYSTEMS (SYMBOLS AND ABBREVIATIONS)

NO SCALE

RSP ES-1B DATED OCTOBER 5, 2007 SUPERCEDES STANDARD PLAN ES-1B DATED MAY 1, 2006 - PAGE 401 OF THE STANDARD PLANS BOOK DATED MAY 2006.

REVISED STANDARD PLAN RSP ES-1B

2006 REVISED STANDARD PLAN RSP ES-1B

7-10-07

DIST	COUNTY	ROUTE	POST MILES TOTAL PROJECT	SHEET NO.	TOTAL SHEETS
03	Sac	50	R0.6/17.4	181	233

REGISTERED ELECTRICAL ENGINEER

October 5, 2007
PLANS APPROVAL DATE

REGISTERED PROFESSIONAL ENGINEER Jeffery G. McRae No. E14512 Exp. 6-30-08 ELECTRICAL STATE OF CALIFORNIA

The State of California or its officers or agents shall not be responsible for the accuracy or completeness of electronic copies of this plan sheet.

To accompany plans dated 1-4-10

2006 REVISED STANDARD PLAN RSP ES-1C

EQUIPMENT IDENTIFICATION

ILLUMINATED SIGN IDENTIFICATION NUMBER:

Sign No. 12345 — Sign number - Place on post or structure

10 ISL SCI 1.0

- 1.0 — Transformer rating (kVA)
- SCI — Lighting control type
- ISL — Number and type of fixtures

Do NOT place on standard or structure

ELECTROLIER OR EQUIPMENT IDENTIFICATION NUMBER:

12345 - 15'-0"

- 15'-0" — Mast arm length, if shown. Do not place on standard or structure.
- 12345 — Equipment number - Place on standard or structure. Existing equipment numbers are shown in parenthesis

CONDUIT AND CONDUCTOR IDENTIFICATION:

1½"C, 2#10, 15#14, 2 DLC

- 2#10, 15#14, 2 DLC — Number and size of conductors and cables
- 1½"C — Size of conduit in inches

Ø1, Ø2, Ø2P, etc.	Traffic phase identification for signal faces, detectors and phase diagrams
1 2 3	Project note numbers
A B C	Equipment description, installation or item numbers
1 2 3	Conduit run numbers

SIGNAL AND LIGHTING STANDARD (TYPICAL DESIGNATION):

19A - 3 - 100

- 100 — Wind velocity = 100 mph
- 3 — Case 3 arm loading
- 19A — Standard type
- Standard Plan sheet number
- Detail number or letter

MISCELLANEOUS EQUIPMENT

PROPOSED	EXISTING	
CMS	cms	Changeable message sign
		Closed circuit television camera
		Highway advisory radio pole and antenna
EMS	ems	Extinguishable message sign
M V	m v	Detection device M = Microwave sensor V = Video image sensor

WIRING DIAGRAM LEGEND

P	Pole
CB	Circuit breaker
A	Ampere
V	Volt
M	Metered
UM	Unmetered
NB	Neutral bus
GB	Ground bus
G	Equipment grounding conductor
N	Grounded conductor (Neutral)

- External conductor
- Conductor or bus
- Tie point
- Contactor coil
- Contactor, Contact NO
- Terminal blocks
- Contactor, Contact NC
- Enclosure bond
- Grounding electrode
- Circuit breaker
- Receptacle

PULL BOXES

PROPOSED EXISTING

Pull box-No. 5 unless otherwise indicated or noted.

3 — 9A(21)

Pull box-Additional designations or descriptions

- 3 = No. 3½ pull box
- 5 = No. 5 pull box
- 6 = No. 6 pull box
- 7 = No. 7 (Ceiling pull box)
- 8 = No. 8 (Pendant soffit pull box)
- 9 = No. 9 pull box
- 9A = No. 9A pull box

- (C) = Communications pull box
- (E) = Pull box with extension
- (S) = Sprinkler control pull box
- (21) = Anchor bolts and conduit for future installation of Type 21 Standard
- (T) = Traffic pull box

VEHICLE DETECTORS

5 J 9 U

- U — U = Upper, L = Lower
- 9 — Slot number in input file
- J — Input file (I or J)
- 5 — Phase

PROPOSED EXISTING

- Type A detector loop. Outline of sawcut shown.
- Type B detector loop. Outline of sawcut shown.
- Type C detector loop. Outline of sawcut shown.
- Type D detector loop. Outline of sawcut shown.
- Type E detector loop. Outline of sawcut shown.
- Type Q detector loop. Outline of sawcut shown.
- Magnetic detector
- DH / dh — Detector handhole
- Microwave or video detection zone

STATE OF CALIFORNIA
DEPARTMENT OF TRANSPORTATION

ELECTRICAL SYSTEMS (SYMBOLS AND ABBREVIATIONS)

NO SCALE

RSP ES-1C DATED OCTOBER 5, 2007 SUPERCEDES STANDARD PLAN ES-1C DATED MAY 1, 2006 - PAGE 402 OF THE STANDARD PLANS BOOK DATED MAY 2006.

REVISED STANDARD PLAN RSP ES-1C

DIST	COUNTY	ROUTE	POST MILES TOTAL PROJECT	SHEET NO.	TOTAL SHEETS
03	Sac	50	R0.6/17.4	182	233

REGISTERED ELECTRICAL ENGINEER

October 5, 2007
PLANS APPROVAL DATE

REGISTERED PROFESSIONAL ENGINEER
Jeffery G. McRae
No. E14512
Exp. 6-30-08
ELECTRICAL
STATE OF CALIFORNIA

The State of California or its officers or agents shall not be responsible for the accuracy or completeness of electronic copies of this plan sheet.

To accompany plans dated 1-4-10

2006 REVISED STANDARD PLAN RSP ES-2C

NOTES-TYPE III SERVICE EQUIPMENT ENCLOSURES:

1. Service equipment enclosure and metering equipment shall meet the requirements of the service utility. The meter area shall have a sealable, lockable, weathertight cover that can be removed without the use of tools.

2. Service equipment enclosures shall be factory wired and conform to NEMA standards.

3. Dimensions of service equipment enclosures shall meet the requirements of the service utility.

4. The dead front panels on Type III service equipment enclosures shall have a continuous stainless steel or aluminum piano hinge. The panel in front of the breakers shall be secured with a latch or captive screws. No live parts shall be mounted on the dead front panel.

5. The exterior door shall have provisions for padlocking. The padlock hole shall be a minimum diameter of 7/16".

6. Enclosures housing transformers of more than one kVA shall have effective screened ventilation louver of not less than 50 square inches. Screen shall be stainless steel No. 304, with a No. 10 size mesh. Framed screen shall be secured with at least four bolts.

7. Fasteners on the exterior of the enclosure shall be vandal-resistant and shall not be removable from the exterior. Exterior screws, nuts, bolts and washers shall be stainless steel.

8. Landing lugs for incoming service conductors shall be compatible with either copper or aluminum conductors sized to suit the conductors shown on the plan. Landing lugs shall be copper or tin-plated aluminum. Neutral bus shall be rated for 125 A and be suitable for copper or aluminum conductors unless otherwise specified. The terminal shall include but not be limited to:

   a) Incoming terminals (landing lugs)
   b) Neutral lugs
   c) Solid neutral terminal strip

9. At least 6 standard single pole circuit breaker spaces, 3/4" nominal, shall be provided for branch circuits. Circuit breaker interiors shall be copper. Interiors of enclosure shall accept plug-in or cable-in/cable-out circuit breakers.

10. Control wiring shall be 600 V, 14 stranded machine tool wire. Where subject to flexing, 19 strand wire shall be used.

11. Main bus shall be rated for 125 A and shall be tin-plated copper.

12. A plastic laminated wiring diagram shall be provided with brass mounting eyelets and attached to the inside of the enclosure and the wiring diagram shall be affixed to the interior with a UL or ETL approved method.

13. An engraved phenolic nameplate on the dead front panel indicating the function of each circuit or device shall be installed with stainless steel rivets or stainless steel screws:

    a) Adjacent to the breaker or device with character size a minimum of 1/8".

    b) At the top of the exterior door panel indicating State system number, voltage level and number of phases with character size a minimum of 3/16".

14. The plan shows the approximate location of devices within the enclosure. Components may be rearranged, however, the "working" clearances within the service equipment enclosure shall be maintained.

15. In unpaved areas a raised portland cement concrete pad 2'-0" x 4" x width of foundation shall be constructed in front of new service equipment enclosure installation. Pad shall be set to elevation of foundation.

16. Foundation shall extend 2" minimum beyond edge of service equipment enclosure.

17. Internal bus, where shown, is typical only. Alternative design of proposed service equipment enclosure shall be submitted to the Engineer for approval.

18. Plug-in circuit breakers may be mounted in the vertical or horizontal position. Cable-in/cable-out circuit breakers shall be mounted in the vertical position.

19. Type III-AF and Type III-BF service equipment enclosures shall have the meter viewing windows located on the front side of the service equipment enclosures.

20. Type III-AR and Type III-BR service equipment enclosures shall be similarly constructed as Type III-AF and Type III-BF respectively, except the meter viewing windows shall be located on the back side of the service equipment enclosures.

21. Minimum clearance shall be required for front and back of service equipment enclosure per National Electrical Code, Article 110.26, "Spaces About Electric Equipment (600 Volts, Nominal, or Less)."

STATE OF CALIFORNIA
DEPARTMENT OF TRANSPORTATION

ELECTRICAL SYSTEMS (SERVICE EQUIPMENT NOTES TYPE III SERIES)

NO SCALE

RSP ES-2C DATED OCTOBER 5, 2007 SUPERCEDES STANDARD PLAN ES-2C
DATED MAY 1, 2006 - PAGE 405 OF THE STANDARD PLANS BOOK DATED MAY 2006.

REVISED STANDARD PLAN RSP ES-2C

DIST	COUNTY	ROUTE	POST MILES TOTAL PROJECT	SHEET NO.	TOTAL SHEETS
03	Sac	50	R0.6/17.4	183	233

REGISTERED ELECTRICAL ENGINEER

October 5, 2007
PLANS APPROVAL DATE

REGISTERED PROFESSIONAL ENGINEER Jeffery G. McRae No. E14512 Exp. 6-30-08 ELECTRICAL STATE OF CALIFORNIA

The State of California or its officers or agents shall not be responsible for the accuracy or completeness of electronic copies of this plan sheet.

To accompany plans dated 1-4-10

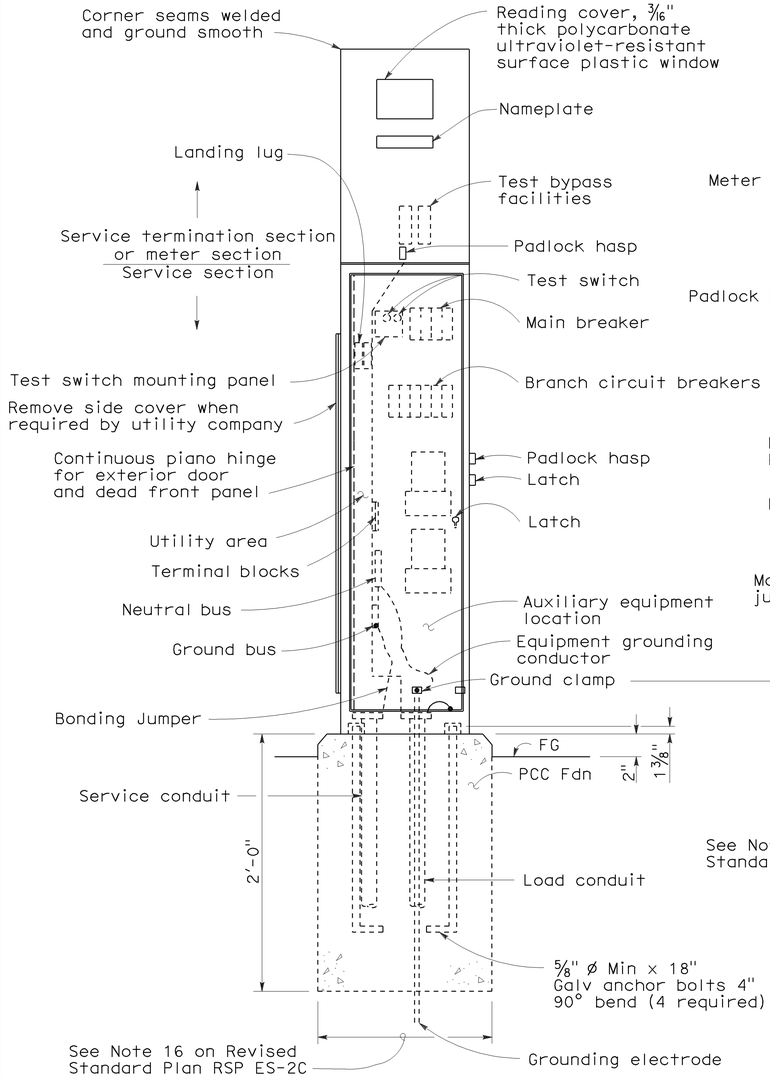

FRONT VIEW

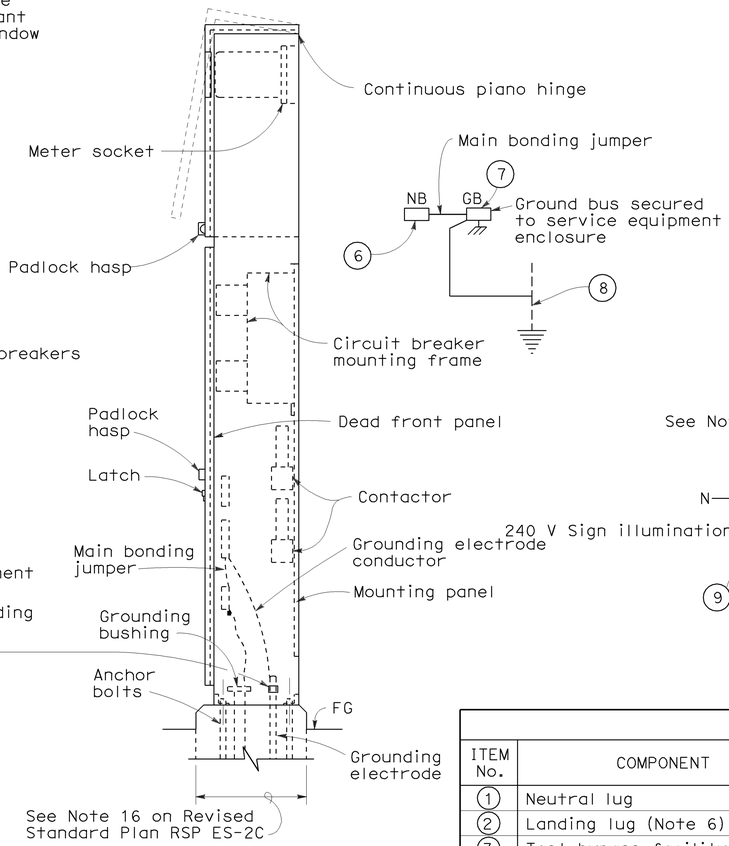

SIDE VIEW

TYPE III-AF SERVICE EQUIPMENT ENCLOSURE (TYPICAL)

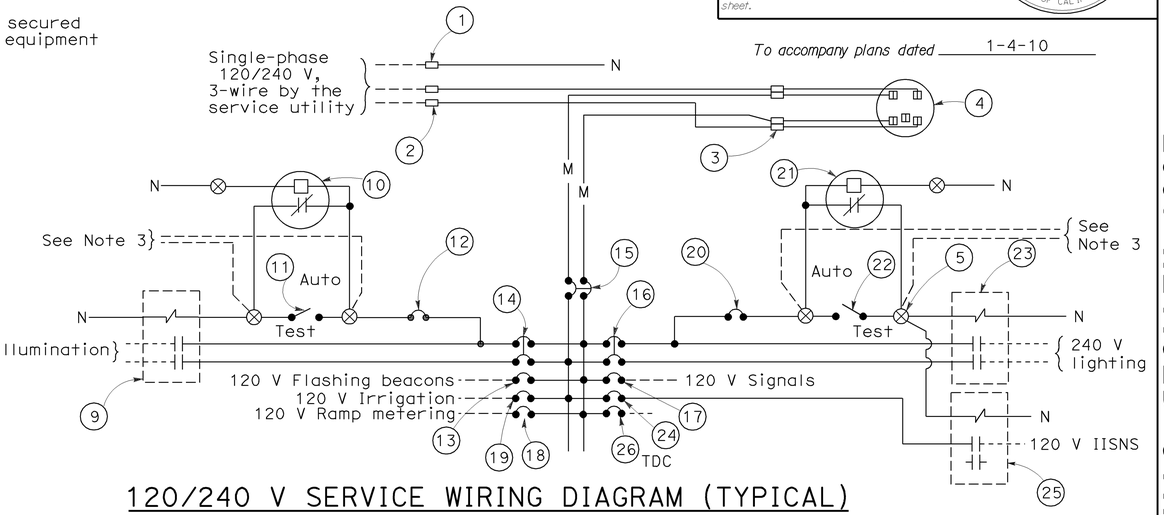

120/240 V SERVICE WIRING DIAGRAM (TYPICAL)

TYPE III-A SERVICE (120/240 V) EQUIPMENT LEGEND

ITEM No.	COMPONENT	NAME PLATE DESCRIPTION	ITEM No.	COMPONENT	NAME PLATE DESCRIPTION
1	Neutral lug		14	30 A, 240 V, 2P, CB	Sign Illumination
2	Landing lug (Note 6)		15	100 A, 240 V, 2P, CB	Main Breaker
3	Test bypass facility		16	30 A, 240 V, 2P, CB	Lighting
4	Meter socket and support		17	50 A, 120 V, 1P, CB	Signals
5	Terminal blocks		18	30 A, 120 V, 1P, CB	Ramp Metering
6	Neutral bus		19	20 A, 120 V, 1P, CB	Irrigation
7	Ground bus		20	15 A, 120 V, 1P, CB	Lighting Control
8	Grounding electrode		21	Photoelectric unit (Note 7)	
9	30 A, 2PNO Contactor	Sign Illumination	22	15 A, 1P, Test switch	Lighting Test Switch
10	Photoelectric unit (Note 7)		23	60 A, 2PNO Contactor	Lighting
11	15 A, 1P, Test switch	Sign Illumination Test Switch	24	15 A, 120 V, 1P, CB	IISNS
12	15 A, 120 V, 1P, CB	Sign Illumination Control	25	30 A, 2PNO Contactor	IISNS
13	15 A, 120 V, 1P, CB	Flashing Beacon	26	20 A, 120 V, 1P, CB	Telephone Demarcation Cabinet

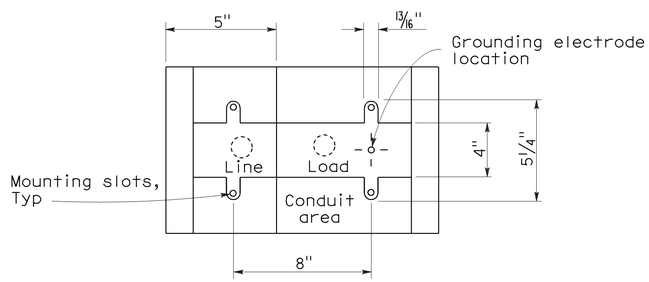

BASE FOR TYPE III-A SERVICE EQUIPMENT ENCLOSURE

NOTES: (FOR SERVICE EQUIPMENT ENCLOSURE)

1. Voltage ratings of service equipment shall conform to the service voltages indicated on the plans.
2. Unless otherwise indicated on the plans, service equipment items shall be provided for each service equipment enclosure as shown.
3. Connect to remote test switch mounted on lighting standards, sign post or structure when required.
4. Items No. 1 and 6 shall be isolated from the service equipment enclosure.
5. Meter sockets shall be 5 clip type.
6. The landing lug shall be suitable for multiple conductors.
7. Type V photoelectric control shall be used unless otherwise indicated on the plans.

STATE OF CALIFORNIA
DEPARTMENT OF TRANSPORTATION

ELECTRICAL SYSTEMS (SERVICE EQUIPMENT AND TYPICAL WIRING DIAGRAM, TYPE III-A SERIES)

NO SCALE

RSP ES-2D DATED OCTOBER 5, 2007 SUPERCEDES STANDARD PLAN ES-2D DATED MAY 1, 2006 - PAGE 406 OF THE STANDARD PLANS BOOK DATED MAY 2006.

REVISED STANDARD PLAN RSP ES-2D

2006 REVISED STANDARD PLAN RSP ES-2D

7-10-07

DIST	COUNTY	ROUTE	POST MILES TOTAL PROJECT	SHEET NO.	TOTAL SHEETS
03	Sac	50	R0.6/17.4	184	233

REGISTERED ELECTRICAL ENGINEER

June 6, 2008
PLANS APPROVAL DATE

REGISTERED PROFESSIONAL ENGINEER
Jeffery G. McRae
No. E14512
Exp. 6-30-10
ELECTRICAL
STATE OF CALIFORNIA

The State of California or its officers or agents shall not be responsible for the accuracy or completeness of electronic copies of this plan sheet.

To accompany plans dated 1-4-10

VISORS

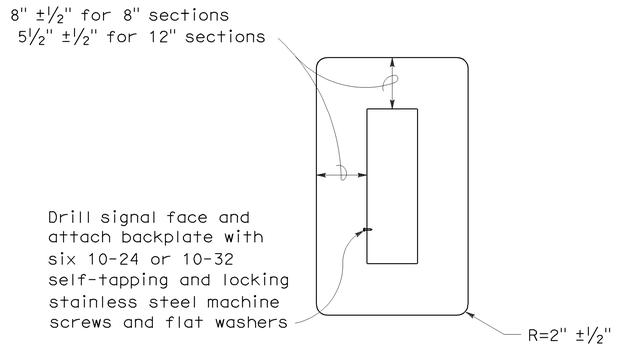

8" AND 12" SECTIONS

BACKPLATE

1/16" minimum thickness
3001-14 aluminum, or plastic when specified

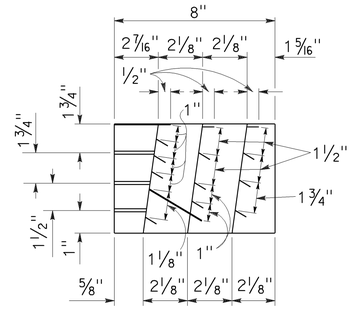

SECTION A-A

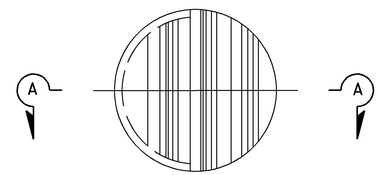

FRONT VIEW

DIRECTIONAL LOUVER

Directional louvers shall be oriented as directed by the Engineer and secured in place with one plated brass machine screw and nut.

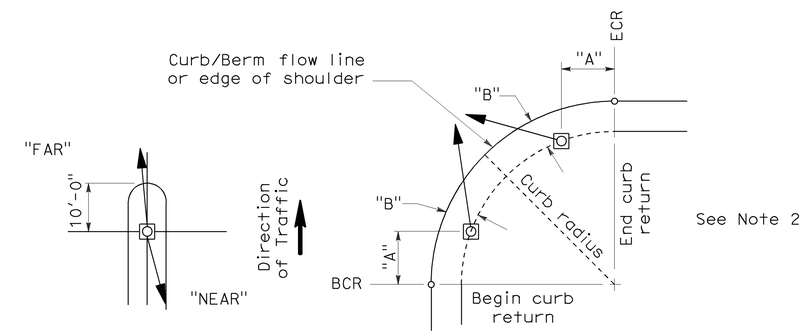

NOTES:

1. Typical signal pole placement unless dimensioned on plans.
2. For "A" and "B" dimensions, see Pole Schedule, or as directed by the Engineer.

SIGNAL STANDARD PLACEMENT DIMENSIONS AND EQUIPMENT LOCATIONS

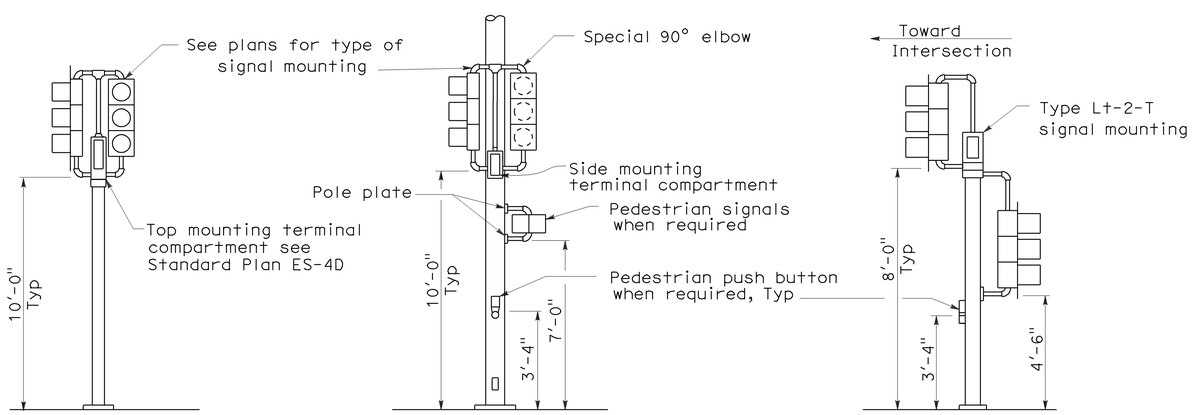

TOP MOUNTED SIGNALS (TV)

Type 1-A, 1-B, 1-C and 1-D standard as indicated on the plans

SIDE MOUNTED SIGNALS (SV AND SP)

Normally used on standards with luminaire or signal mast arm

LEFT TURN LANE SIGNAL

Type 1-A, 1-B, 1-C and 1-D standard as indicated on plans

TYPICAL SIGNAL INSTALLATIONS

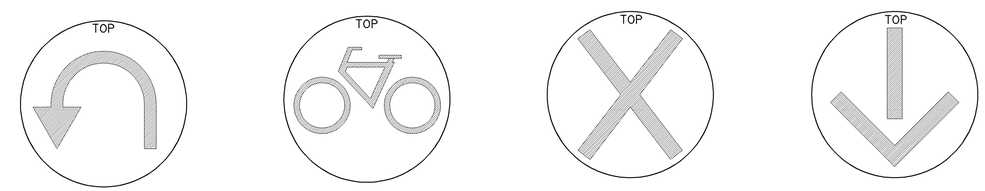

U-TURN SIGNAL FACE

BICYCLE SIGNAL FACE

LANE CONTROL SIGNAL FACE

LANE CONTROL SIGNAL FACE

STATE OF CALIFORNIA
DEPARTMENT OF TRANSPORTATION

ELECTRICAL SYSTEMS (SIGNAL HEADS AND MOUNTINGS)

NO SCALE

RSP ES-4C DATED JUNE 6, 2008 SUPERSEDES STANDARD PLAN ES-4C DATED MAY 1, 2006 - PAGE 420 OF THE STANDARD PLANS BOOK DATED MAY 2006.

REVISED STANDARD PLAN RSP ES-4C

2006 REVISED STANDARD PLAN RSP ES-4C

5-19-08

DIST	COUNTY	ROUTE	POST MILES TOTAL PROJECT	SHEET NO.	TOTAL SHEETS
03	Sac	50	R0.6/17.4	185	233

REGISTERED ELECTRICAL ENGINEER

June 6, 2008
PLANS APPROVAL DATE

REGISTERED PROFESSIONAL ENGINEER Jeffery G. McRae No. E14512 Exp. 6-30-10 ELECTRICAL STATE OF CALIFORNIA

The State of California or its officers or agents shall not be responsible for the accuracy or completeness of electronic copies of this plan sheet.

To accompany plans dated 1-4-10

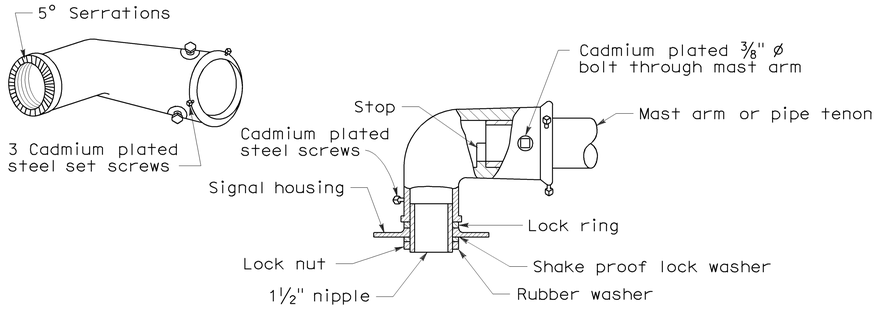

MAST ARM MOUNTING - TYPE "MAT"

For 2 NPS pipe, see Note 1.

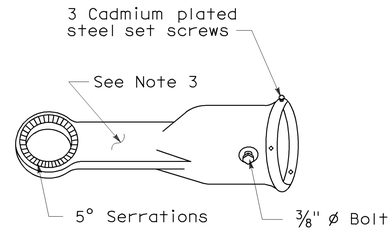

MAST ARM MOUNTING - TYPE "MAS"

For 2 NPS pipe. See Note 1.

SIGNAL SLIP FITTERS

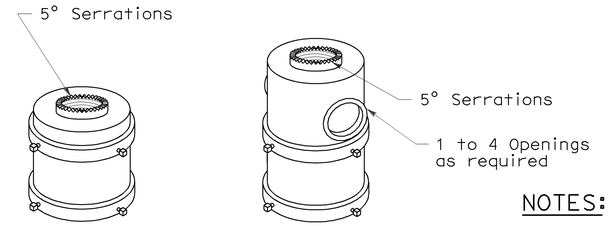

For one mounting For mulitiple mountings

TOP MOUNTINGS

For 4 NPS pipe, see Note 2.

NOTES:

1. After mast arm signal has been plumbed and secured, drill 7/16" hole through mast arm tenon in line with slip fitter hole. Place a cadmium plated 3/8" ø galvanized bolt with washer under bolt head through hole and secure with washer, nut, and locknut. Seal openings between mast arm mountings and mast arm with mastic.
2. (a) Threaded top mounted slip fitter openings shall be 1½ NPS.
   (b) Serrations in fittings shall match those on bottom of signal heads or in lock ring.
   (c) Top opening shall be offset when backplate is used.
3. Wireway shall have a cross section area of 0.95 square inch minimum. Minimum width of ½".

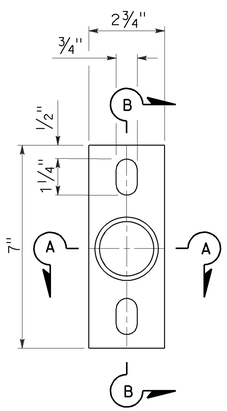

POLE PLATE

For side mountings

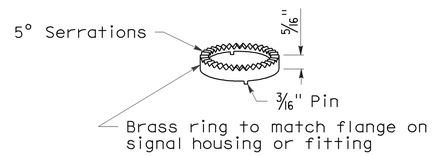

LOCK RING

Use where locking ring is not integral with signal housing or fitting.

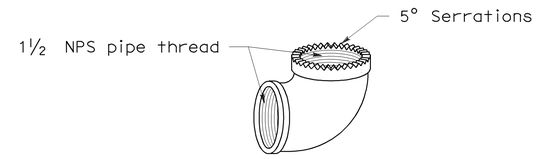

SPECIAL 90° ELBOW

One for each signal head, except those with special slip fitter mounting

MISCELLANEOUS MOUNTING HARDWARE

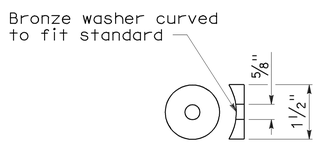

DETAIL "C"

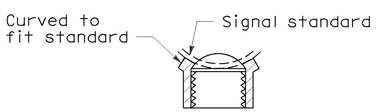

SECTION A-A

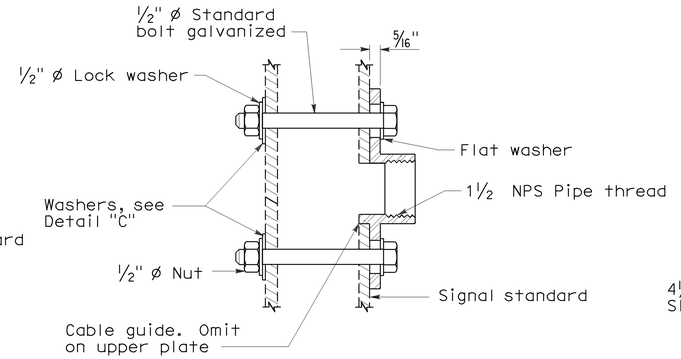

SECTION B-B

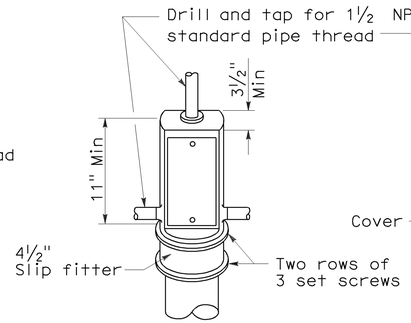

TOP MOUNTING

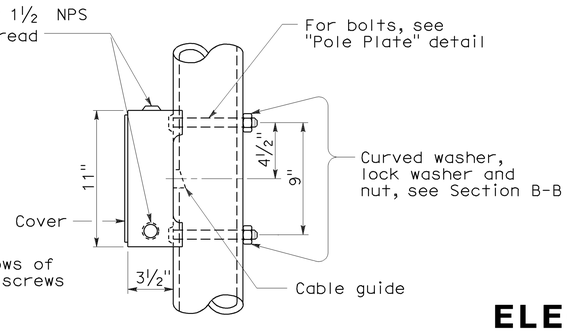

SIDE MOUNTING

TERMINAL COMPARTMENTS

STATE OF CALIFORNIA
DEPARTMENT OF TRANSPORTATION

ELECTRICAL SYSTEMS (SIGNAL HEADS AND MOUNTINGS)

NO SCALE

RSP ES-4D DATED June 6, 2008 SUPERSEDES STANDARD PLAN ES-4D
DATED MAY 1, 2006 - PAGE 421 OF THE STANDARD PLANS BOOK DATED MAY 2006.

REVISED STANDARD PLAN RSP ES-4D

2006 REVISED STANDARD PLAN RSP ES-4D

5-19-08

DIST	COUNTY	ROUTE	POST MILES TOTAL PROJECT	SHEET NO.	TOTAL SHEETS
03	Sac	50	R0.6/17.4	186	233

REGISTERED ELECTRICAL ENGINEER

October 5, 2007
PLANS APPROVAL DATE

REGISTERED PROFESSIONAL ENGINEER Jeffery G. McRae No. E14512 Exp. 6-30-08 ELECTRICAL STATE OF CALIFORNIA

The State of California or its officers or agents shall not be responsible for the accuracy or completeness of electronic copies of this plan sheet.

To accompany plans dated 1-4-10

LOOP INSTALLATION PROCEDURE

1. Loops shall be centered in lanes.
2. Saw slots in pavement for loop conductors as shown in details.
3. Distance between side of loop and a lead-in saw cut from adjacent detectors shall be 2'-0" minimum. Distance between lead-in saw cuts shall be 6" minimum.
4. Bottom of saw slot shall be smooth with no sharp edges.
5. Slots shall be washed until clean, blown out and thoroughly dried before installing loop conductors.
6. Adjacent loops on the same sensor unit channel shall be wound in opposite directions.
7. Identify and tag loop circuit pairs in the pull box with loop number, start (S) and finish (F) of conductor. Identify and tag lead-in-cable with sensor number and phase.
8. Install loop conductor in slot using a 3/16" to 1/4" thick wood paddle. Hold loop conductors with wood paddles (at the bottom of the sawed slot) during sealant placement.
9. No more than 2 twisted pairs shall be installed in one sawed slot.
10. Allow additional 5'-0" of slack length of conductor for the lead-in run to pull box.
11. The additional length of each conductor for each loop shall be twisted together into a pair (6 turns per 3'-4" minimum) before being placed in the slot and conduit leading to pull box.
12. Test each loop circuit for continuity, circuit resistance and insulation resistance at the pull box before filling slots.
13. Fill slots as shown in details.
14. Splice loop conductors to lead-in-cable. Splices shall be soldered.
15. End of lead-in-cable and Type 2 loop conductor shall be waterproofed prior to installing in conduit to prevent moisture from entering the cable.
16. Lead-in-cable shall not be spliced between the pull box and the controller cabinet terminals.
17. Test each loop circuit for continuity, circuit resistance and insulation resistance at the controller cabinet location.
18. Where loop conductors are not to be spliced to a lead-in-cable, the ends of the conductors shall be taped and waterproofed with electrical insulating coating.

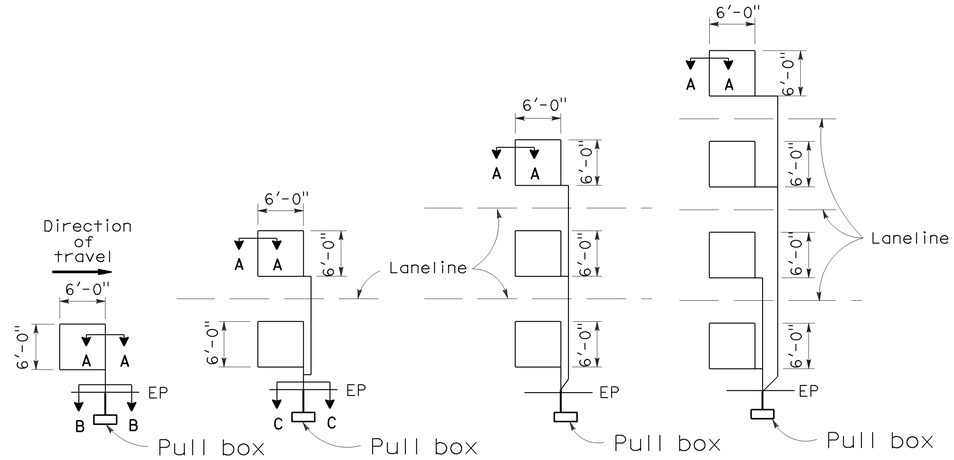

TYPE 1A INSTALLATION | TYPE 2A INSTALLATION | TYPE 3A INSTALLATION | TYPE 4A INSTALLATION

SAWCUT DETAILS

(Type A loop detector configurations illustrated)

1. 1A thru 4A = 1 Type A loop configuration in each lane.
2. 1B thru 4B = 1 Type B loop configuration in each lane.
3. 1C = 1 Type C loop configuration entering lanes as required.
4. 1D thru 4D = 1 Type D loop configuration in each lane.
5. 1E thru 4E = 1 Type E loop configuration in each lane.
6. 1Q thru 4Q = 1 Type Q loop configuration in each lane. (Use Type A, B, C, D, E or Q loop detector configurations only when specified or shown on plans)

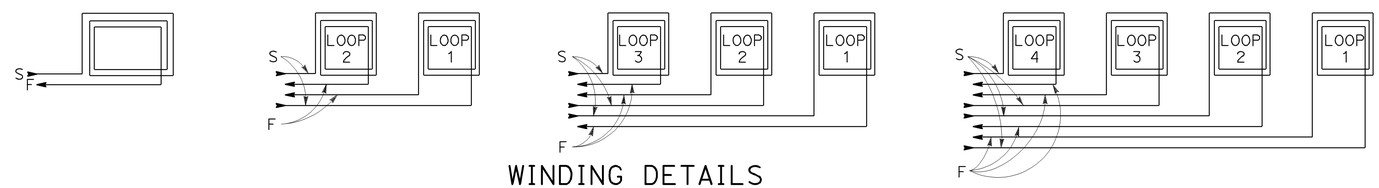

WINDING DETAILS

See Notes 6 and 7

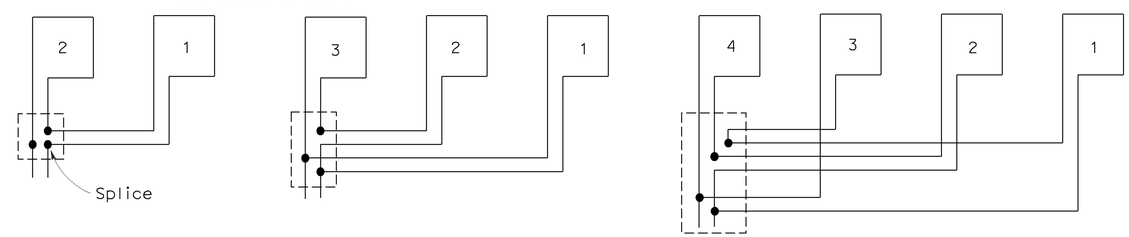

TYPICAL LOOP CONNECTIONS

(Dashed lines represent the pull box)

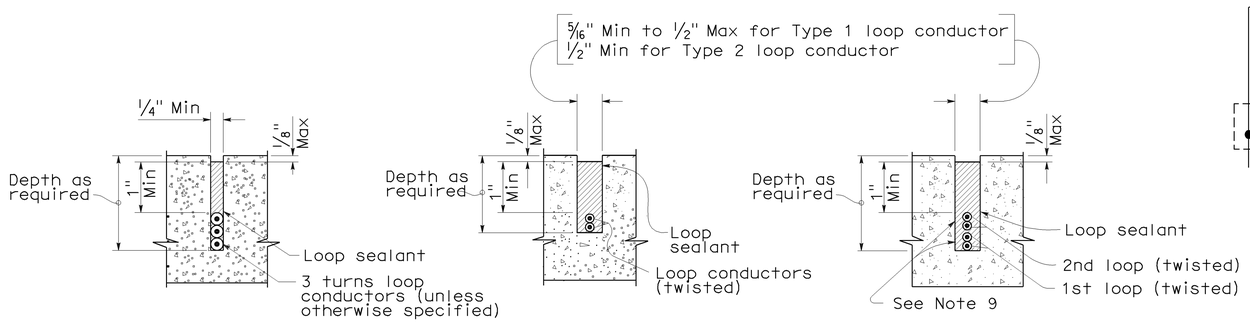

SECTION A-A | SECTION B-B | SECTION C-C

SLOT DETAILS - TYPE 1 AND TYPE 2 LOOP CONDUCTOR

STATE OF CALIFORNIA
DEPARTMENT OF TRANSPORTATION

ELECTRICAL SYSTEMS (DETECTORS)

NO SCALE

RSP ES-5A DATED OCTOBER 5, 2007 SUPERCEDES STANDARD PLAN ES-5A DATED MAY 1, 2006 - PAGE 423 OF THE STANDARD PLANS BOOK DATED MAY 2006.

REVISED STANDARD PLAN RSP ES-5A

2006 REVISED STANDARD PLAN RSP ES-5A

8-17-07

DIST	COUNTY	ROUTE	POST MILES TOTAL PROJECT	SHEET NO.	TOTAL SHEETS
03	Sac	50	R0.6/17.4	187	233

REGISTERED CIVIL ENGINEER

October 5, 2007
PLANS APPROVAL DATE

REGISTERED PROFESSIONAL ENGINEER
Stanley P. Johnson
No. C57793
Exp. 3-31-08
CIVIL
STATE OF CALIFORNIA

The State of California or its officers or agents shall not be responsible for the accuracy or completeness of electronic copies of this plan sheet.

To accompany plans dated 1-4-10

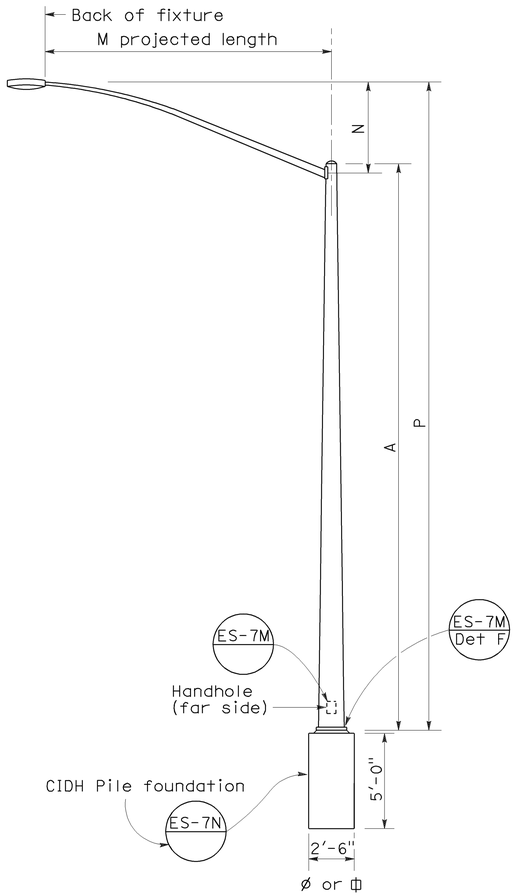

ELEVATION
TYPE 15 AND TYPE 21

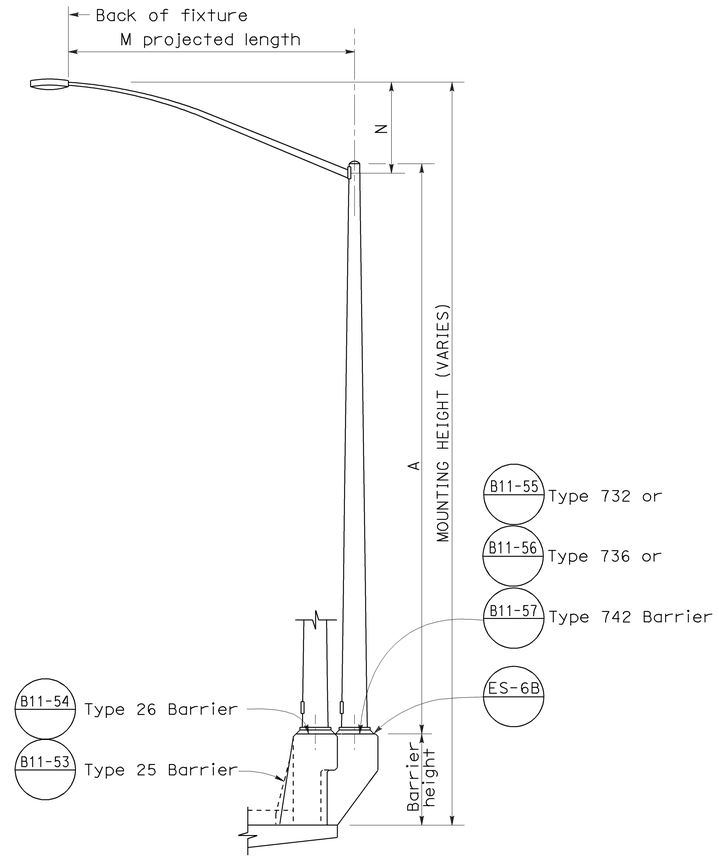

ELEVATION
TYPE 15 AND TYPE 21 BARRIER RAIL MOUNTED

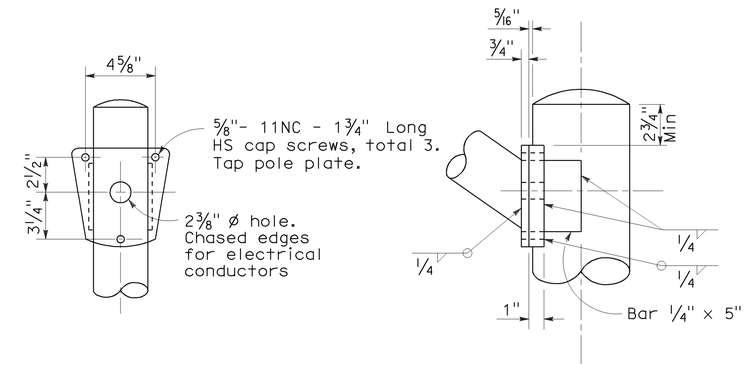

DETAIL R
LUMINAIRE ARM CONNECTION

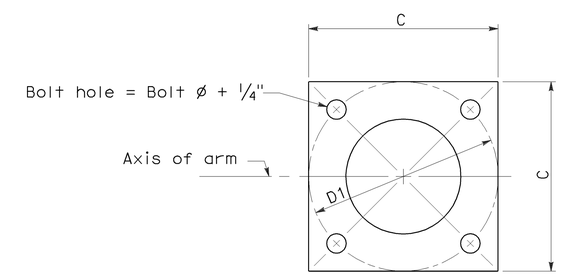

BASE PLATE

POLE TYPE	POLE DATA				BASE PLATE DATA				LUMINAIRE ARM
	A Height	Min OD Base	Min OD Top	Wall Thickness	C	D1 Bolt Circle	Thickness	Anchor Bolts Size	
15	30′	8"	3 7/8"	0.1196"	1′-0"	1′-0"	1"	1" ø x 3′-0" x 4"*	6′ - 15′ [12′]
21	35′	8 5/8"	3 7/8"	0.1196"	1′-0"	1′-0"	1"	1 1/4"ø x 3′-0" x 4"*	6′ - 15′ [12′]

* For barrier rail bolts, see Standard Plan ES-6B.

LUMINAIRE ARM DATA					
M Projected Length	N Rise	Min OD At Pole	Nominal Thickness	P Type 15	P Type 21
6′-0"	2′-0"±	3 1/4"	0.1196"	31′-6"±	36′-6"±
8′-0"	2′-6"±	3 1/2"	0.1196"	32′-0"±	37′-0"±
10′-0"	3′-3"±	3 7/8"	0.1196"	32′-9"±	37′-9"±
12′-0"	4′-3"±	3 7/8"	0.1196"	33′-9"±	38′-9"±
15′-0"	4′-9"±	4 1/4"	0.1196"	34′-3"±	39′-3"±

NOTES:

1. ☐ Indicates arm length to be used unless otherwise noted on the plans.
2. For Type 15-SB, use Type 15 standard with Type 30 slip base plate details, see Standard Plan ES-6F.
3. For additional notes, see Standard Plan ES-7M and ES-7N.

STATE OF CALIFORNIA
DEPARTMENT OF TRANSPORTATION

ELECTRICAL SYSTEMS (LIGHTING STANDARD TYPES 15 AND 21)

NO SCALE

RSP ES-6A DATED OCTOBER 5, 2007 SUPERCEDES STANDARD PLAN ES-6A
DATED MAY 1, 2006 - PAGE 427 OF THE STANDARD PLANS BOOK DATED MAY 2006.

REVISED STANDARD PLAN RSP ES-6A

2006 REVISED STANDARD PLAN RSP ES-6A

7-10-07

DIST	COUNTY	ROUTE	POST MILES TOTAL PROJECT	SHEET NO.	TOTAL SHEETS
03	Sac	50	R0.6/17.4	188	233

REGISTERED CIVIL ENGINEER

January 18, 2008
PLANS APPROVAL DATE

REGISTERED PROFESSIONAL ENGINEER
Stanley P. Johnson
No. C57793
Exp. 03-31-08
CIVIL
STATE OF CALIFORNIA

The State of California or its officers or agents shall not be responsible for the accuracy or completeness of electronic copies of this plan sheet.

To accompany plans dated 1-4-10

LUMINAIRE ARM DATA

PROJECTED LENGTH	THICKNESS	MINIMUM OD @ POLE	MOUNTING HEIGHT
* 6'-0"	0.1196"	3¼"	36'-9"±
8'-0"		3½"	37'-3"±
10'-0"		3¾"	38'-0"±
12'-0"		3¾"	39'-0"±
15'-0"		4¼"	39'-6"±
** 20'-0"	0.1793"	5"	37'-0"±

* Type 30 - arm length 6'-0" - 15'-0" maximum
** Type 31 - arm lengths 20'-0"

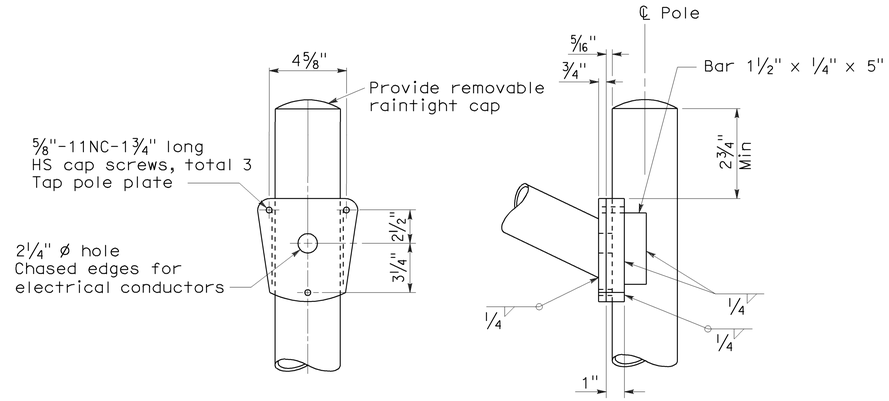

DETAIL A - TYPE 30

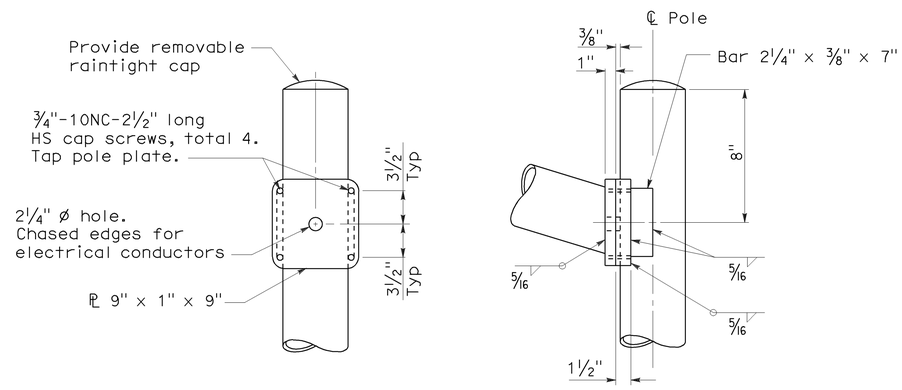

DETAIL A - TYPE 31

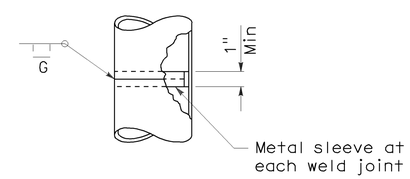

POLE SPLICE

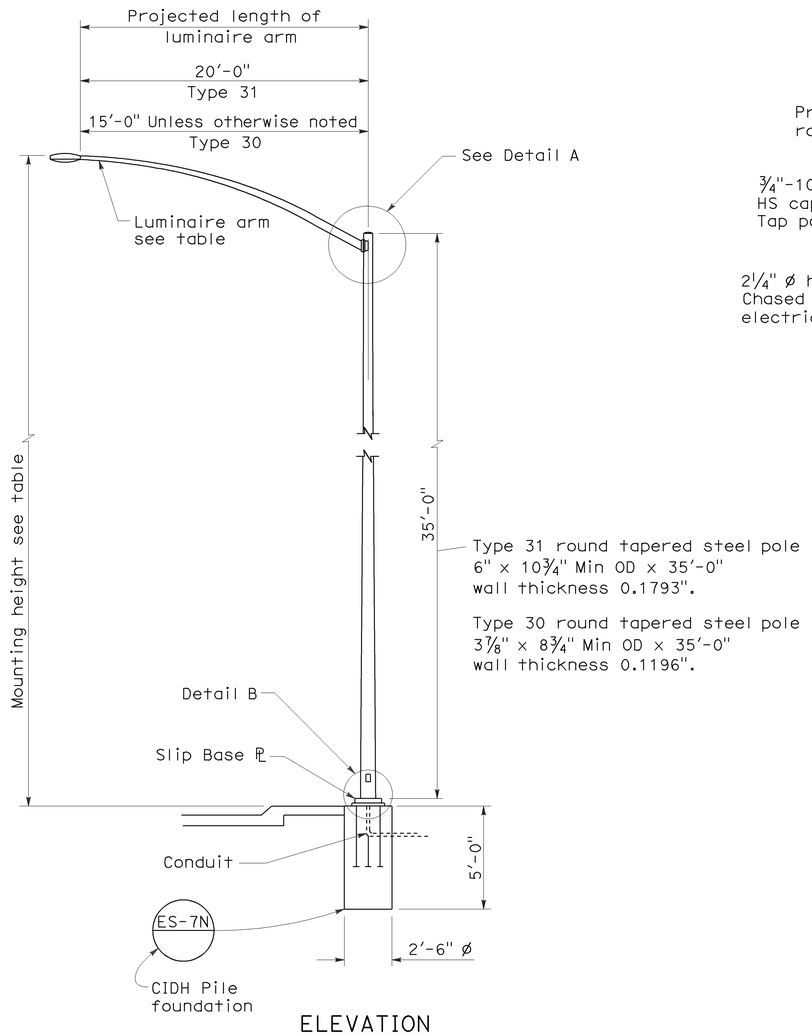

ELEVATION

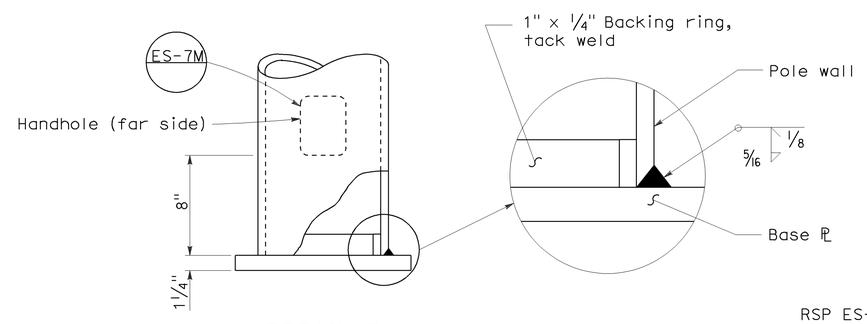

DETAIL B

NOTES:

1. Sheet steel shall have a minimum yield of 48,000 psi.
2. For slip base details see Standard Plan ES-6F.
3. For Type 30 fixed base use Type 15 base plate, and foundation shown on Revised Standard Plan RSP ES-6A. Use 1¼" Dia x 3'-6" x 4" anchor bolts.
4. For Type 31 fixed base use Type 32 base plate, anchor bolts and foundation on Standard Plan ES-6G.
5. Handhole shall be located on downstream side of traffic unless noted otherwise on plans.
6. For additional general notes refer to Standard Plan ES-7M.

STATE OF CALIFORNIA
DEPARTMENT OF TRANSPORTATION

ELECTRICAL SYSTEMS (LIGHTING STANDARD TYPES 30 AND 31)

NO SCALE

RSP ES-6E DATED JANUARY 18, 2008 SUPERCEDES STANDARD PLAN ES-6E DATED MAY 1, 2006 - PAGE 430 OF THE STANDARD PLANS BOOK DATED MAY 2006.

REVISED STANDARD PLAN RSP ES-6E

2006 REVISED STANDARD PLAN RSP ES-6E

11-19-07

DIST	COUNTY	ROUTE	POST MILES TOTAL PROJECT	SHEET NO.	TOTAL SHEETS
03	Sac	50	R0.6/17.4	189	233

REGISTERED CIVIL ENGINEER

October 5, 2007
PLANS APPROVAL DATE

REGISTERED PROFESSIONAL ENGINEER
Stanley P. Johnson
No. C57793
Exp. 3-31-08
CIVIL
STATE OF CALIFORNIA

The State of California or its officers or agents shall not be responsible for the accuracy or completeness of electronic copies of this plan sheet.

To accompany plans dated 1-4-10

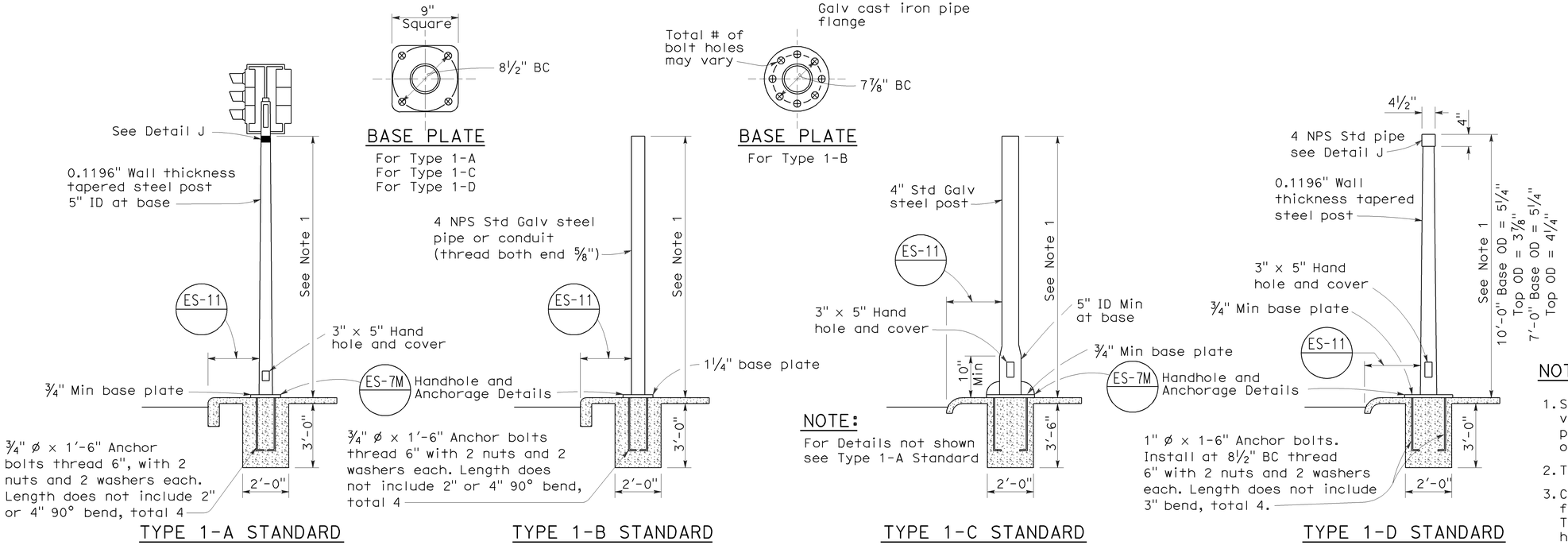

TYPE 1 SIGNAL STANDARDS

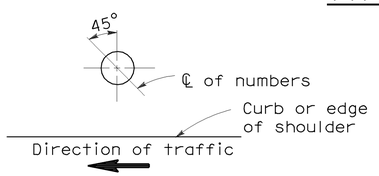

PLAN

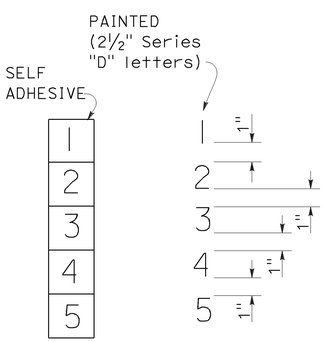

NUMBER DETAIL

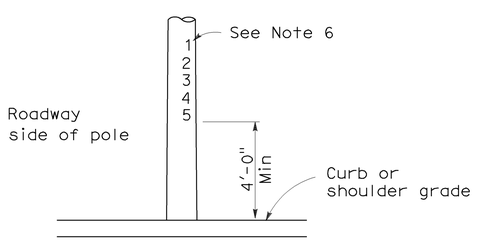

TYPIC NUMBER FORMAT

LOCATION OF EQUIPMENT NUMBERS ON STANDARDS AND POSTS

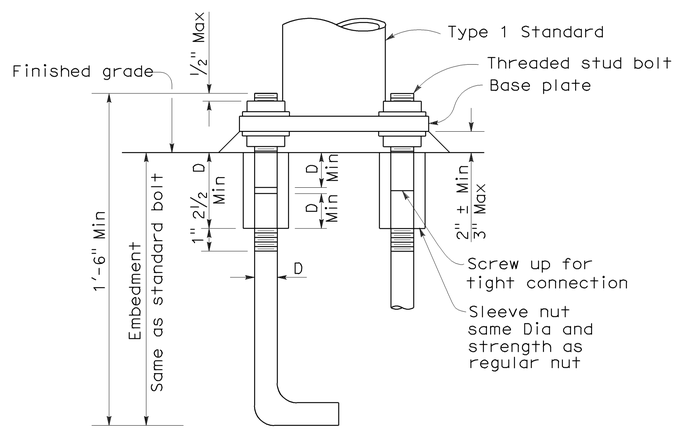

ANCHOR BOLTS WITH SLEEVE NUTS

Sleeve nuts to be used only when shown or specified on Project Plans

D = Diameter of anchor bolt

NOTES:

1. Standards shall be 10'-0" ± 2" for vehicle signals and 7'-0" ± 2" for pedestrian signals unless otherwise noted on plans.
2. Top of standards shall be 4½" OD.
3. Conduits shall extend 2" maximum above finished surface of foundation and for Types 1-A, 1-C and 1-D shall be sloped toward handhole.
4. Anchor bolts shall be bonded to conduit or grounding conductor.
5. Conduit between standard and adjacent pull box shall be 2" minimum.
6. Paint numbers on roadway side facing traffic when electrolier or post is left of direction of traffic.

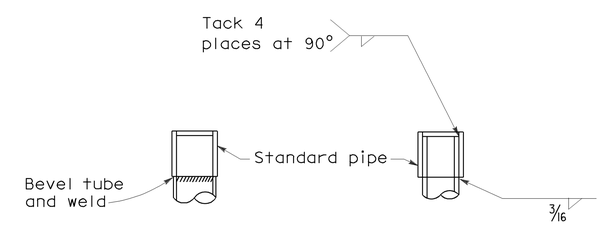

DETAIL J

Tube may be inserted into pipe or butted as required

STATE OF CALIFORNIA
DEPARTMENT OF TRANSPORTATION

ELECTRICAL SYSTEMS (SIGNAL AND LIGHTING STANDARD TYPE 1 STANDARD AND EQUIPMENT NUMBERING)

NO SCALE

RSP ES-7B DATED OCTOBER 5, 2007 SUPERCEDES STANDARD PLAN ES-7B DATED MAY 1, 2006 - PAGE 438 OF THE STANDARD PLANS BOOK DATED MAY 2006.

REVISED STANDARD PLAN RSP ES-7B

2006 REVISED STANDARD PLAN RSP ES-7B

7-10-07

DIST	COUNTY	ROUTE	POST MILES TOTAL PROJECT	SHEET NO.	TOTAL SHEETS
03	Sac	50	R0.6/17.4	190	233

REGISTERED ELECTRICAL ENGINEER

October 5, 2007
PLANS APPROVAL DATE

REGISTERED PROFESSIONAL ENGINEER
Jeffery G. McRae
No. E14512
Exp. 6-30-08
ELECTRICAL
STATE OF CALIFORNIA

The State of California or its officers or agents shall not be responsible for the accuracy or completeness of electronic copies of this plan sheet.

To accompany plans dated 1-4-10

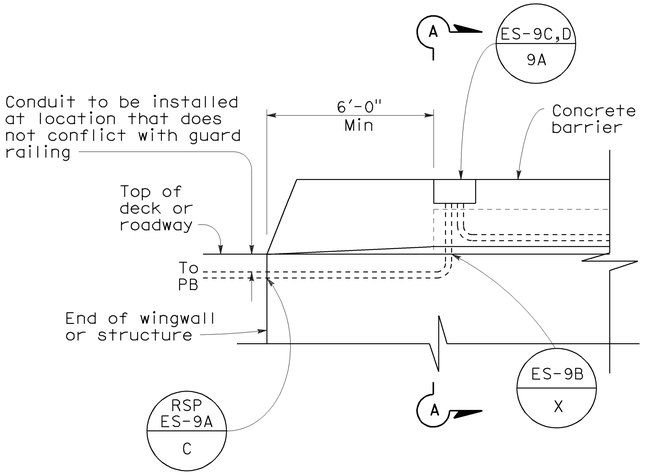

SIDEVIEW

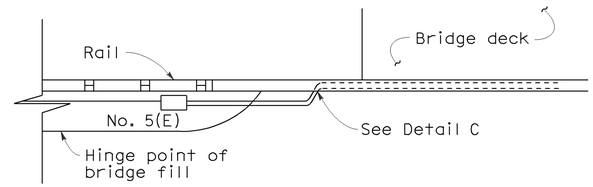

TOP VIEW

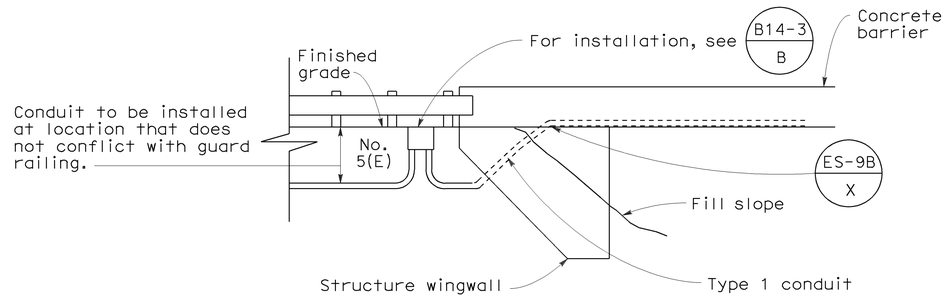

SIDE VIEW
DETAIL I
CONDUIT TERMINATION

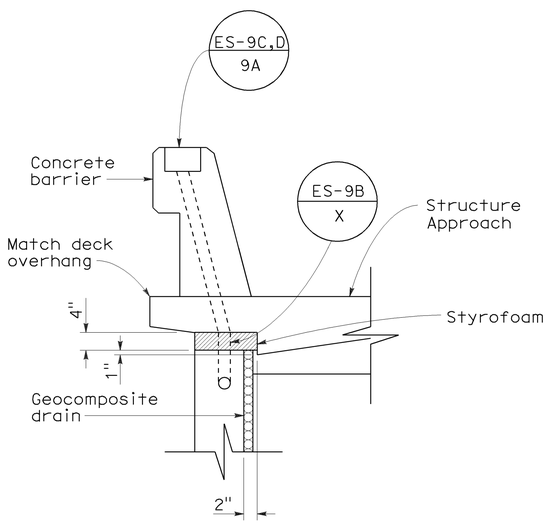

SECTION A-A

DETAIL A
CONDUIT TERMINATION

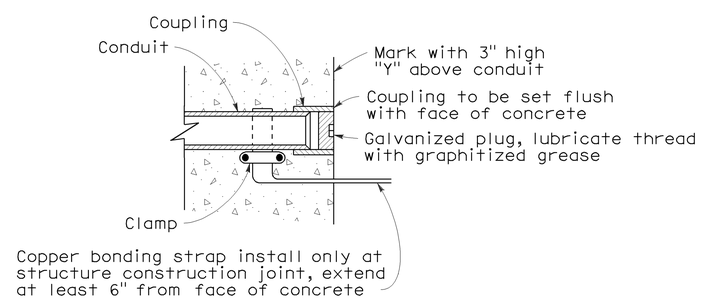

DETAIL C
CONDUIT TERMINATION

STATE OF CALIFORNIA
DEPARTMENT OF TRANSPORTATION

ELECTRICAL SYSTEMS (ELECTRICAL DETAILS STRUCTURE INSTALLATIONS)

NO SCALE

RSP ES-9A DATED OCTOBER 5, 2007 SUPERCEDES STANDARD PLAN ES-9A
DATED MAY 1, 2006 - PAGE 454 OF THE STANDARD PLANS BOOK DATED MAY 2006.

REVISED STANDARD PLAN RSP ES-9A

2006 REVISED STANDARD PLAN RSP ES-9A

7-11-07

DIST	COUNTY	ROUTE	POST MILES TOTAL PROJECT	SHEET NO.	TOTAL SHEETS
03	Sac	50	R0.6/17.4	191	233

REGISTERED ELECTRICAL ENGINEER

October 5, 2007
PLANS APPROVAL DATE

REGISTERED PROFESSIONAL ENGINEER Jeffery G. McRae No. E14512 Exp. 6-30-08 ELECTRICAL STATE OF CALIFORNIA

The State of California or its officers or agents shall not be responsible for the accuracy or completeness of electronic copies of this plan sheet.

To accompany plans dated 1-4-10

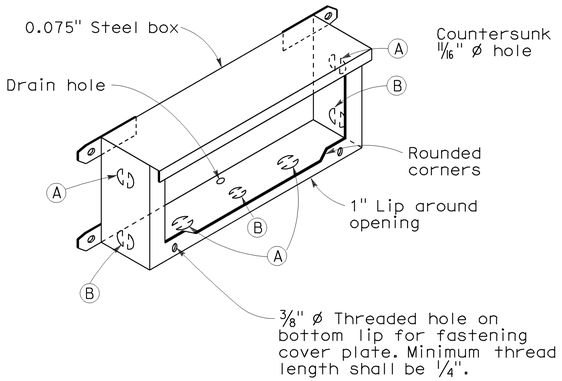

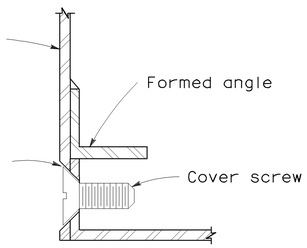

DETAIL J

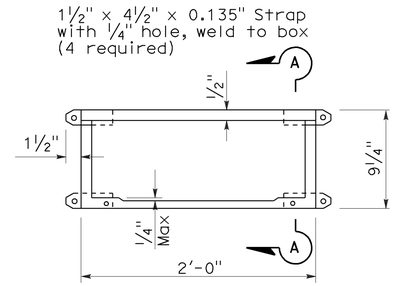

PLAN

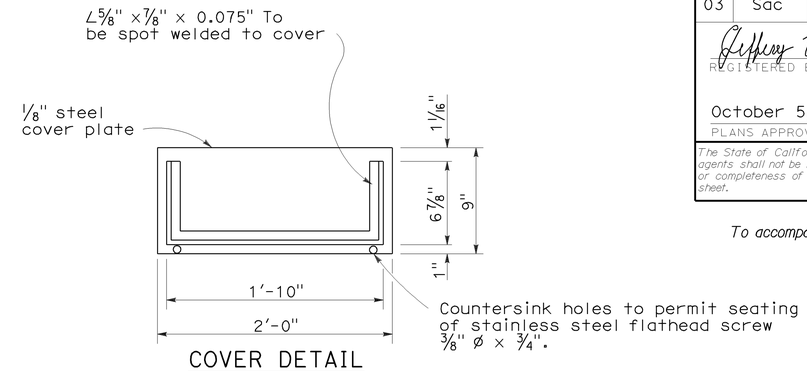

COVER DETAIL

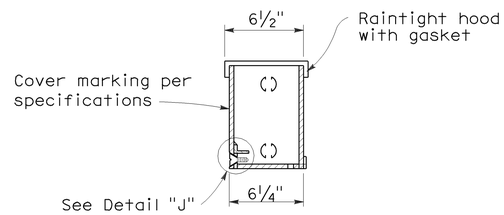

SECTION A-A

INSTALLATION NOTE:

Box shall be parallel to top of railing. Close cover box during pouring with 1/4" plywood of sufficient size to provide 1:1 chamfer on 3 sides of cover. Upper edge of plywood shall fit against lower edge of raintight hood.

No. 9 STRUCTURE PULL BOX

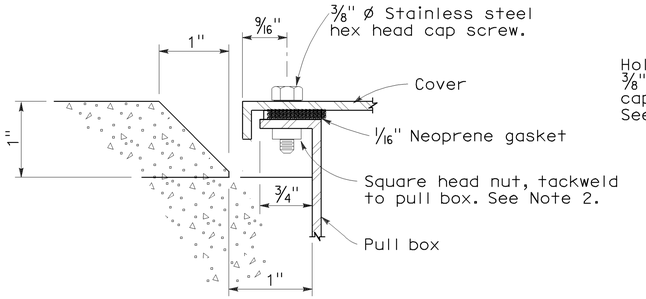

SECTION C-C

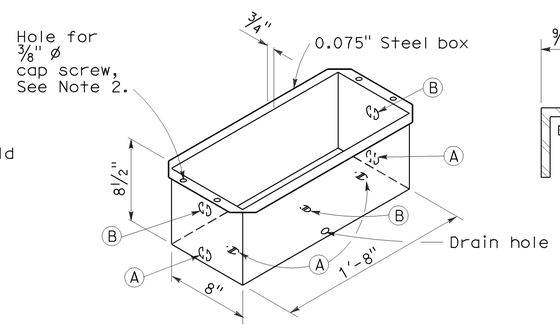

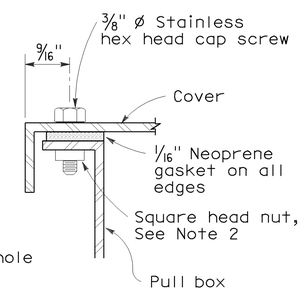

DETAIL A

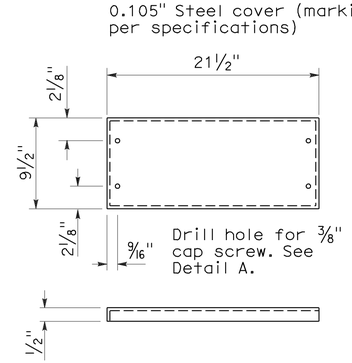

COVER DETAIL

NOTES: No. 9 and 9A Pull Box

1. Corner joints shall be lapped and secured by spot welding or riveting.
2. Where cap screws are used to attach cover to box, either of the following methods of providing adequate threading may be used:
   a. Tack weld square nut to bottom of flange (Total 4), or
   b. Tack weld a 1/4" x 5/8" x 8" bar beneath flange (Total 2).
3. Pound knockouts flat after punching.
4. Multiple size knockouts shall not be permitted.
5. Pull box covers shall be marked as shown on Standard Plan ES-8.

No. 9A STRUCTURE PULL BOX

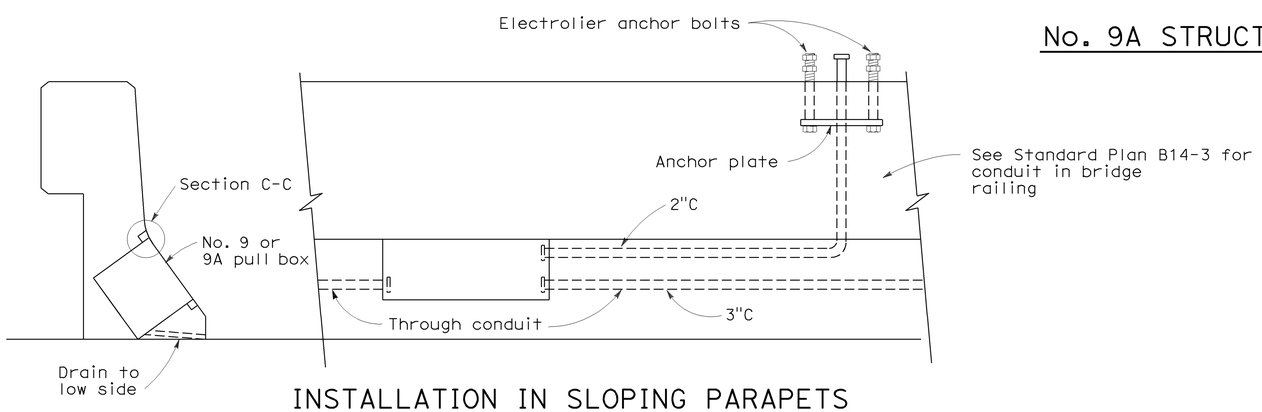

INSTALLATION IN SLOPING PARAPETS

For reinforcement in area of electrolier, see railing sheets. For electrolier anchor bolts, see Standard Plan ES-6B.

KNOCKOUT SCHEDULE
No. 9 AND 9A PULL BOX

(A) 2"C, 1 each end, 2 on bottom.

(B) 3"C, 1 each end, 1 on bottom.

STATE OF CALIFORNIA
DEPARTMENT OF TRANSPORTATION

ELECTRICAL SYSTEMS (ELECTRICAL DETAILS STRUCTURE INSTALLATIONS)

NO SCALE

RSP ES-9C DATED OCTOBER 5, 2007 SUPERCEDES STANDARD PLAN ES-9C DATED MAY 1, 2006 - PAGE 456 OF THE STANDARD PLANS BOOK DATED MAY 2006.

REVISED STANDARD PLAN RSP ES-9C

2006 REVISED STANDARD PLAN RSP ES-9C

7-26-07

DIST	COUNTY	ROUTE	POST MILES TOTAL PROJECT	SHEET NO.	TOTAL SHEETS
03	Sac	50	R0.6/17.4	192	233

REGISTERED ELECTRICAL ENGINEER

October 5, 2007
PLANS APPROVAL DATE

REGISTERED PROFESSIONAL ENGINEER
Jeffery G. McRae
No. E14512
Exp. 6-30-08
ELECTRICAL
STATE OF CALIFORNIA

The State of California or its officers or agents shall not be responsible for the accuracy or completeness of electronic copies of this plan sheet.

To accompany plans dated 1-4-10

2006 REVISED STANDARD PLAN RSP ES-15D

NOTES: (FOR LIGHTING AND SIGN ILLUMINATION CONTROL)

1. The ballast voltages of lighting fixtures and luminaires shall match line service voltages.
2. Voltage rating of photoelectric controls shall conform to the service voltage indicated on the plans.
3. Terminal strip shall be provided for wiring to fixtures.
4. Type SC1A, SC2A, SC3A controls are similar to Types SC1, SC2 and SC3 controls respectively except test switch and wiring are not required.

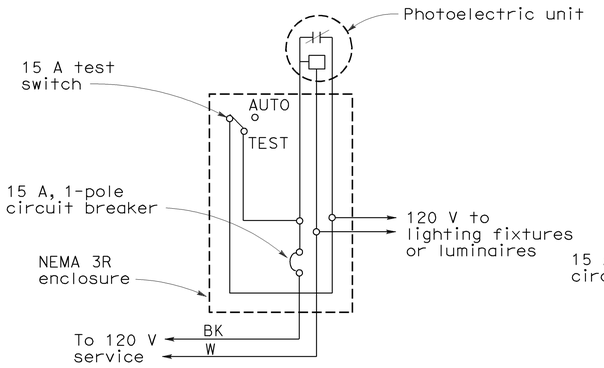

TYPE LC1 CONTROL

For 120 V unswitched circuit with no more than 800 W load.

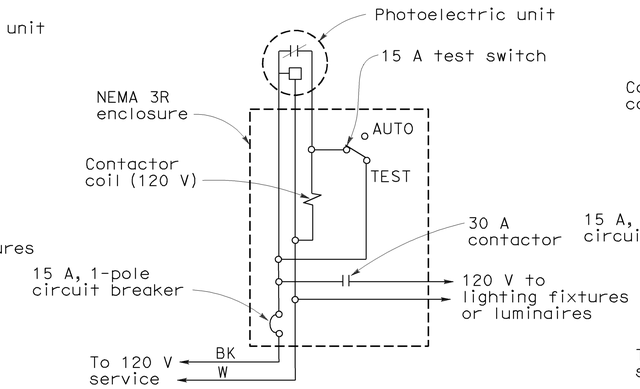

TYPE LC2 CONTROL

For 120 V unswitched circuit

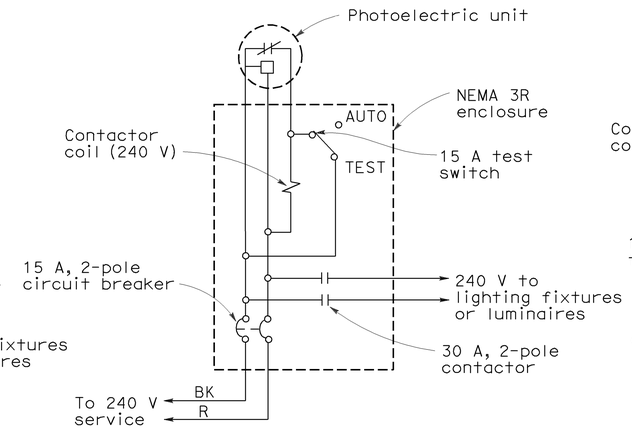

TYPE LC3 CONTROL

For 240 V and 480 V unswitched circuits

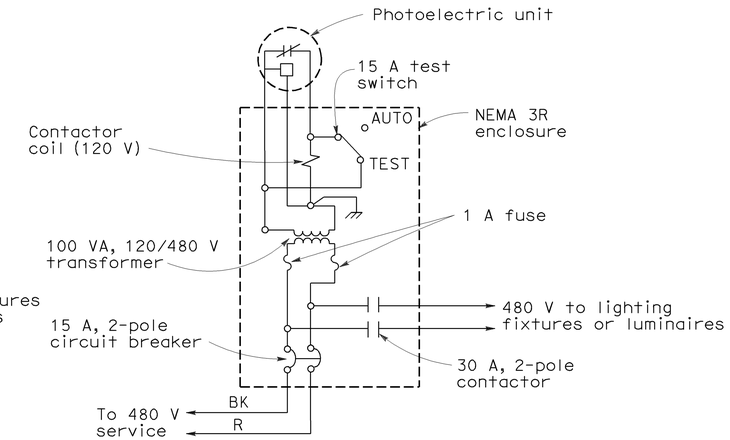

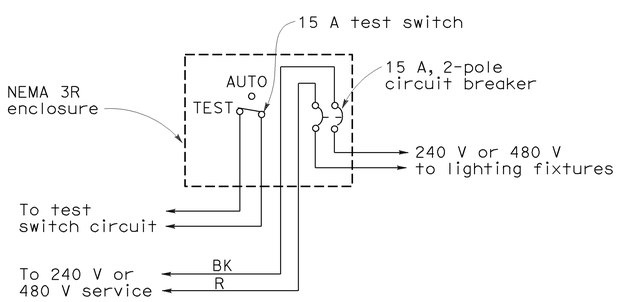

TYPE SC1 CONTROL

For 240 V or 480 V switched circuit, see Note 4 for Type SC1A

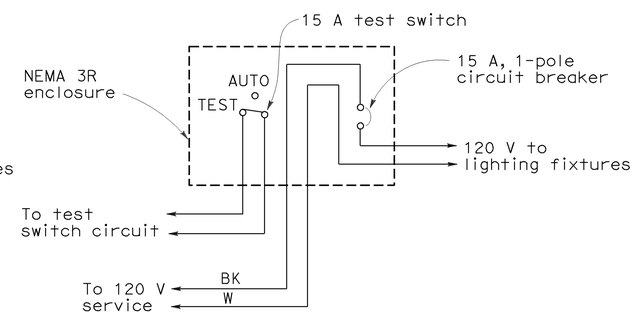

TYPE SC2 CONTROL

For 120 V switched circuit, see Note 4 for Type SC2A

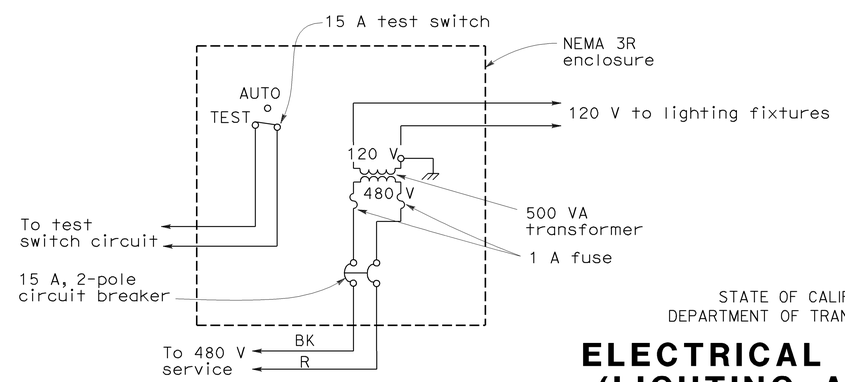

TYPE SC3 CONTROL

For 480 V switched sign circuit, see Note 4 for Type SC3A

STATE OF CALIFORNIA
DEPARTMENT OF TRANSPORTATION

ELECTRICAL SYSTEMS (LIGHTING AND SIGN ILLUMINATION CONTROL)

NO SCALE

RSP ES-15D DATED OCTOBER 5, 2007 SUPERCEDES STANDARD PLAN ES-15D DATED MAY 1, 2006 - PAGE 472 OF THE STANDARD PLANS BOOK DATED MAY 2006.

REVISED STANDARD PLAN RSP ES-15D

9-10-07

DIST	COUNTY	ROUTE	POST MILES TOTAL PROJECT	SHEET No	TOTAL SHEETS
03	Sac	50	R0.6/17.4	193	233

REGISTERED CIVIL ENGINEER — DATE 8-05-09

1-4-10
PLANS APPROVAL DATE

REGISTERED PROFESSIONAL ENGINEER — Jiffay Lee — No. 63599 — Exp. 9-30-10 — CIVIL — STATE OF CALIFORNIA

The State of California or its officers or agents shall not be responsible for the accuracy or completeness of electronic copies of this plan sheet.

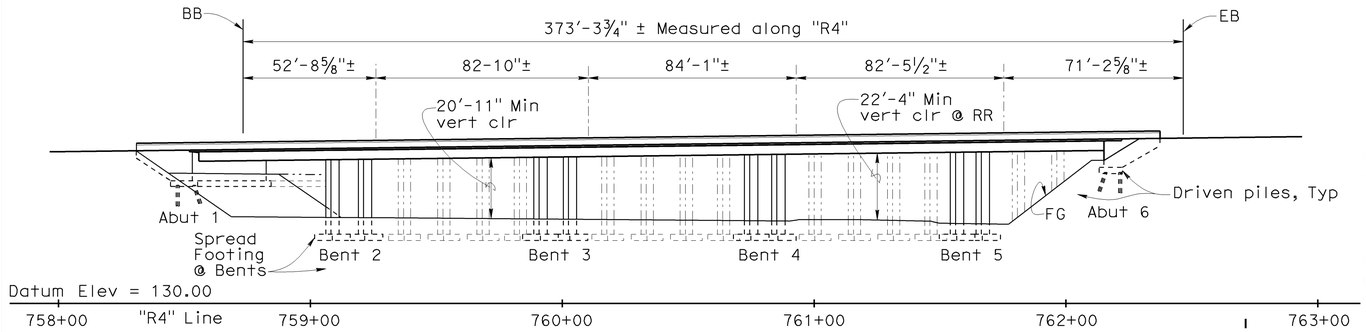

ELEVATION

1" = 30'

QUANTITIES

BRIDGE REMOVAL (PORTION), LOCATION B	LUMP	SUM
STRUCTURE EXCAVATION (BRIDGE)	707	CY
STRUCTURE BACKFILL (BRIDGE)	511	CY
FURNISH STEEL PILING (HP 10 X 57)	641	LF
DRIVE STEEL PILE (HP 10 X 57)	20	EA
STRUCTURAL CONCRETE, BRIDGE FOOTING	116	CY
STRUCTURAL CONCRETE, BRIDGE	787	CY
DRILL AND BOND DOWEL	49	LF
JOINT SEAL (ASPHALTIC PLUG)	69	LF
BAR REINFORCING STEEL (BRIDGE)	386,500	LB
BRIDGE DECK DRAINAGE SYSTEM	2,854	LB
CONCRETE BARRIER (TYPE 736)	406	LF

Notes:

1. Paint "Natoma Overhead Bridges"
2. Paint "Bridge No. 24-0120"
3. Metal beam guardrail, see "Road Plan"
4. Remove existing rail and overhang
5. AC overlay to match existing (See "Road Plan")
6. Cross slope to match existing
7. Deck drain, total 5
8. Deck elevations refer to concrete surface (2" below A.C. surface)
9. For electrical pull box locations, see "Electrical Plans"

Legend:

- Closure pour
- Limits of bridge removal
- Existing Bridge
- Indicates point of minimum vertical clearance

INDEX TO PLANS

Sheet No.	Name
1	GENERAL PLAN
2	GENERAL NOTES
3	FOUNDATION PLAN
4	ABUTMENT 1 LAYOUT
5	ABUTMENT 6 LAYOUT
6	ABUTMENT DETAILS NO. 1
7	ABUTMENT DETAILS NO. 2
8	ABUTMENT DETAILS NO. 3
9	ABUTMENT DETAILS NO. 4
10	ABUTMENT DETAILS NO. 5
11	BENT DETAILS NO. 1
12	BENT DETAILS NO. 2
13	TYPICAL SECTION
14	GIRDER LAYOUT NO. 1
15	GIRDER LAYOUT NO. 2
16	GIRDER DETAILS
17	GIRDER REINFORCEMENT TOP
18	GIRDER REINFORCEMENT BOTTOM
19	ASPHALTIC PLUG JOINT SEAL DETAILS
20	DECK DRAIN DETAILS
21	LOG OF TEST BORINGS 1 OF 2
22	LOG OF TEST BORINGS 2 OF 2

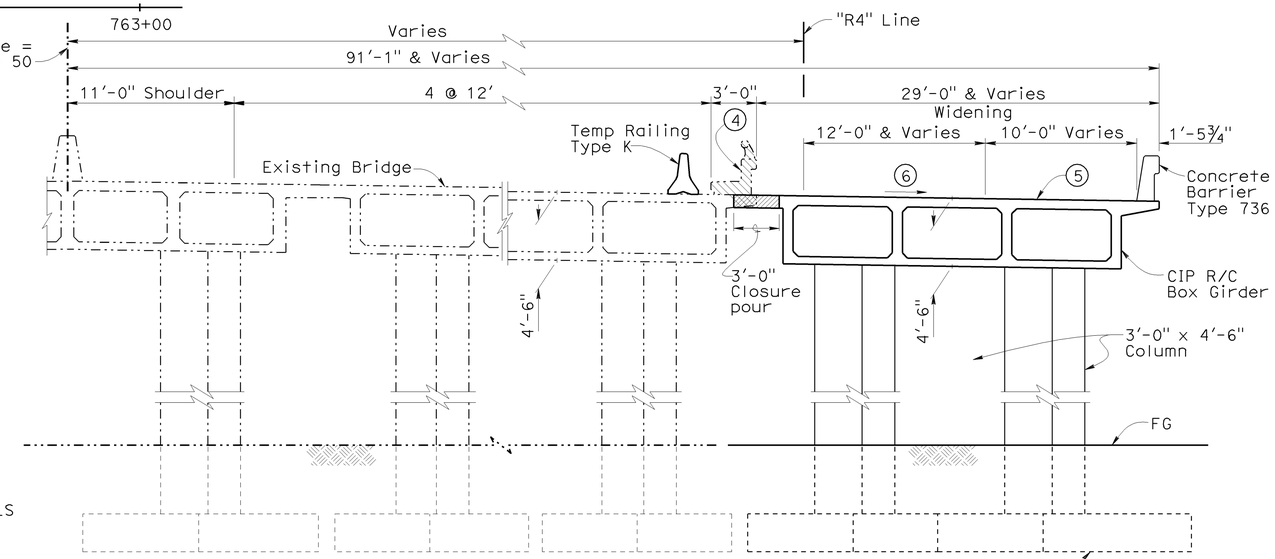

TYPICAL SECTION

1" = 5'

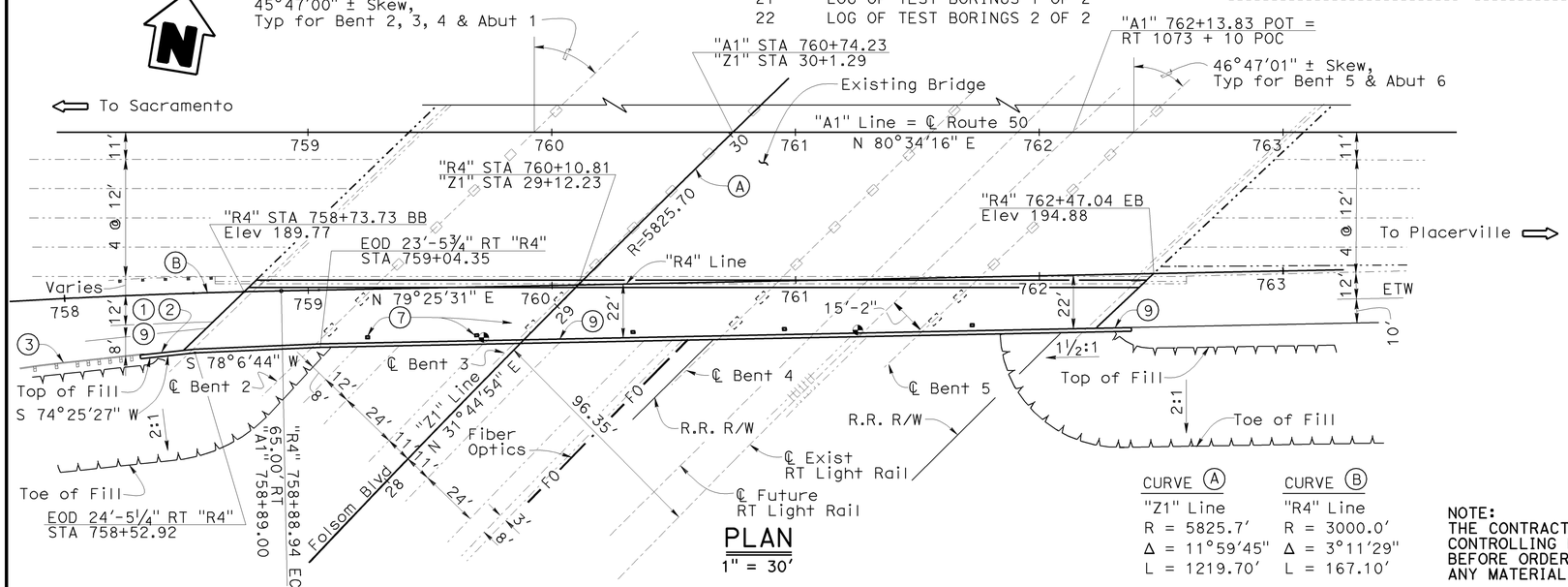

PLAN

1" = 30'

CURVE (A)	CURVE (B)
"Z1" Line	"R4" Line
R = 5825.7'	R = 3000.0'
Δ = 11°59'45"	Δ = 3°11'29"
L = 1219.70'	L = 167.10'

NOTE:
THE CONTRACTOR SHALL VERIFY ALL CONTROLLING FIELD DIMENSIONS BEFORE ORDERING OR FABRICATING ANY MATERIAL.

STANDARD PLANS DATED JULY 2006

	A10A	ACRONYMS AND ABBREVIATIONS (A-L)
	A10B	ACRONYMS AND ABBREVIATIONS (M-Z)
	A62-C	LIMITS OF PAYMENT FOR EXCAVATION AND BACKFILL BRIDGE
	B0-1	BRIDGE DETAILS
	B0-3	BRIDGE DETAILS
	B0-5	BRIDGE DETAILS
	B0-13	BRIDGE DETAILS
	B3-8	RETAINING WALL DETAILS NO. 1
	B3-9	RETAINING WALL DETAILS NO. 2
RSP	B6-21	JOINT SEALS (MAXIMUM MOVEMENT RATING=2")
	B7-1	BOX GIRDER DETAILS
	B7-6	DECK DRAINS
	B11-56	CONCRETE BARRIER TYPE 736
	B14-3	COMMUNICATION AND SPRINKLER CONTROL CONDUIT (CONDUIT LESS THAN 4")
	T3	TEMPORARY RAILING (TYPE K)

G. Setberg
DESIGN ENGINEER

	BY	CHECKED
DESIGN	J. Lee	G. Slocum
DETAILS	C. Figuerres	G. Slocum
QUANTITIES	J. Lynch	G. Zuniga

LOAD & RESISTANCE FACTOR DESIGN — LIVE LOADING: HL93 AND P-15
LAYOUT — J. Lee — CHECKED G. Slocum
SPECIFICATIONS — D. Klein — PLANS AND SPECS COMPARED

STATE OF CALIFORNIA
DEPARTMENT OF TRANSPORTATION

DIVISION OF ENGINEERING SERVICES
STRUCTURE DESIGN
DESIGN BRANCH 2

BRIDGE NO. 24-0120R
POST MILE 17.01

NATOMA OVERHEAD (WIDEN)
GENERAL PLAN

CU 03
EA 1C12U4

ORIGINAL SCALE IN INCHES FOR REDUCED PLANS 0 1 2 3

DISREGARD PRINTS BEARING EARLIER REVISION DATES

REVISION DATES: 6-08-09 | 8-03-09 | 11-14-08 | 1-28-09 | 3-27-09 | 4-16-09 | 4-30-09 | 5-11-09 | 5-12-09

SHEET 1 OF 22

STRUCTURES DESIGN GENERAL PLAN SHEET (ENGLISH) (REV.07-24-06)

FILE => 24-0120r-a-gp01.dgn

USERNAME => trcarol DATE PLOTTED => 05-JAN-2010 TIME PLOTTED => 12:36

DIST	COUNTY	ROUTE	POST MILES TOTAL PROJECT	SHEET No	TOTAL SHEETS
03	Sac	50	R0.6/17.4	194	233

REGISTERED CIVIL ENGINEER 8-05-09 DATE

1-4-10
PLANS APPROVAL DATE

REGISTERED PROFESSIONAL ENGINEER Jiffay Lee No. 63599 Exp. 9-30-10 CIVIL STATE OF CALIFORNIA

The State of California or its officers or agents shall not be responsible for the accuracy or completeness of electronic copies of this plan sheet.

SPREAD FOOTING DATA

Support Location	Working Stress Design (WSD)		Load and Resistance Factor Design (LRFD)		
			Service	Strength	Extreme
	Permissible Gross Contact Stress (Settlement)	Allowable Gross Bearing Capacity	Permissible Net Contact Stress	Factored Gross Nominal Bearing Resistance $\Phi b = 0.45$	Factored Gross Nominal Bearing Resistance $\Phi b = 1.0$
	ksf	ksf	ksf	ksf	ksf
Bent 2 to 5	N/A	N/A	10.5	12.6	28.1

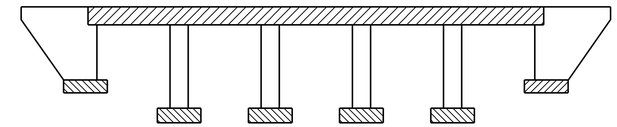

Structural Concrete, Bridge

Structural Concrete, Bridge Footing

Structural Concrete, Bridge (4 ksi at 28 days)

CONCRETE STRENGTH AND TYPE LIMITS

No Scale

PILE DATA TABLE

Support Location	Pile Type	Nominal Resistance Compression	Nominal Resistance Tension	Design Tip Elevation	Specified Tip Elevation	Nominal Driving Resistance Required
	ft	kips	kips	ft	ft	kips
Abutment 1	HP 10 x 57	200	N/A	148.0 (a)	148.8	200
Abutment 6	HP 10 x 57	200	N/A	148.0 (a)	148.8	200

Note:
(a) Design tip elevations are controlled by compression.

GENERAL NOTES (LOAD AND RESISTANCE FACTOR DESIGN)

DESIGN: AASHTO LRFD Bridge Design Specifications, Fourth Edition with Caltrans amendments (December 2008); except that Standard Plans and Standard Drawings are designed using Bridge Design Specifications (1996 AASHTO with Revisions by Caltrans).

SEISMIC DESIGN: Caltrans Seismic Design Criteria (SDC) Version 1.4, June 2006

DEAD LOAD: Includes 35 psf for wearing surface.

LIVE LOADING: HL-93 and P-15 Permit Design Load.

SEISMIC LOADING: Site Specific ARS Curve

CONCRETE: f_y = 60 ksi

f'_c = 3.6 ksi

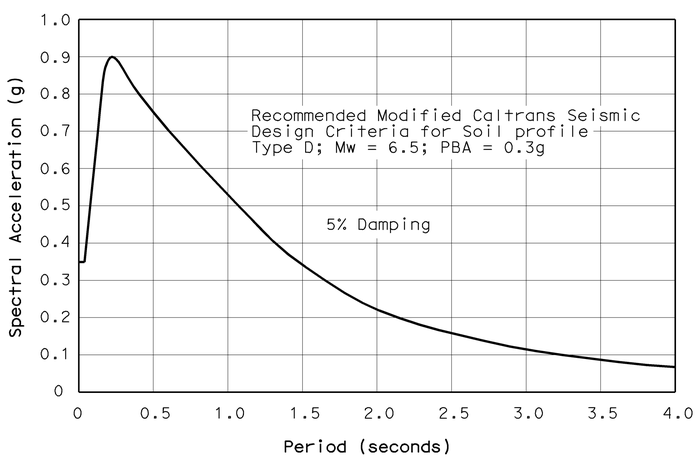

ACCELERATION RESPONSE SPECTRA

No Scale

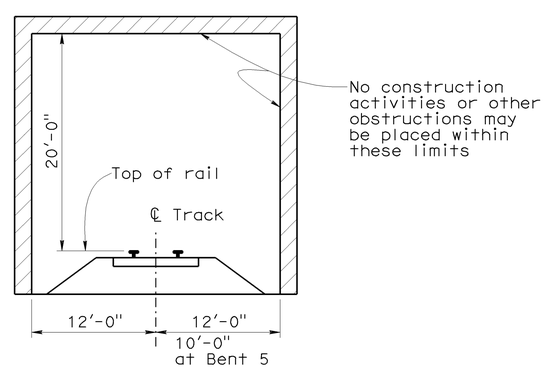

MINIMUM TEMPORARY CONSTRUCTION CLEARANCES

No Scale

(NORMAL TO RAILROAD)

NOTE:
THE CONTRACTOR SHALL VERIFY ALL CONTROLLING FIELD DIMENSIONS BEFORE ORDERING OR FABRICATING ANY MATERIAL.

	BY	CHECKED
DESIGN	J. Lee	G. Slocum
DETAILS	C. Figuerres	G. Slocum
QUANTITIES	J. Lynch	G. Zuniga

STATE OF CALIFORNIA DEPARTMENT OF TRANSPORTATION

DIVISION OF ENGINEERING SERVICES STRUCTURE DESIGN DESIGN BRANCH 2

BRIDGE NO. 24-0120R

POST MILE 17.01

NATOMA OVERHEAD (WIDEN)

GENERAL NOTES

STRUCTURES DESIGN DETAIL SHEET (ENGLISH) (REV. 10/25/05)

ORIGINAL SCALE IN INCHES FOR REDUCED PLANS 0 1 2 3

CU 03
EA 1C12U4

DISREGARD PRINTS BEARING EARLIER REVISION DATES

REVISION DATES 2-13-09 4-17-09 5-14-09 6-02-09

SHEET 2 OF 22

FILE => 24-0120r-a-itp.dgn

USERNAME => trcarol DATE PLOTTED => 05-JAN-2010 TIME PLOTTED => 12:37

DIST	COUNTY	ROUTE	POST MILES TOTAL PROJECT	SHEET No	TOTAL SHEETS
03	Sac	50	R0.6/17.4	195	233

REGISTERED CIVIL ENGINEER 8-05-09 DATE

1-4-10
PLANS APPROVAL DATE

REGISTERED PROFESSIONAL ENGINEER Jiffay Lee No. 63599 Exp. 9-30-10 CIVIL STATE OF CALIFORNIA

The State of California or its officers or agents shall not be responsible for the accuracy or completeness of electronic copies of this plan sheet.

CURVE DATA

No.	R	Δ	T	L
(A)	5825.70	11°59'45"	612.09	1219.70
(B)	3000.00	3°11'29"	83.57	167.10

Notes:

1. Sewer Line (5.50 ø), Sewer Line (1.64 ø), Water Line (1.00 ø), AT&T Fiber Optic Line, Elec. Line, TV Line, Tele. Line is layouted per Utility Map
2. Concrete Barrier on median per picture

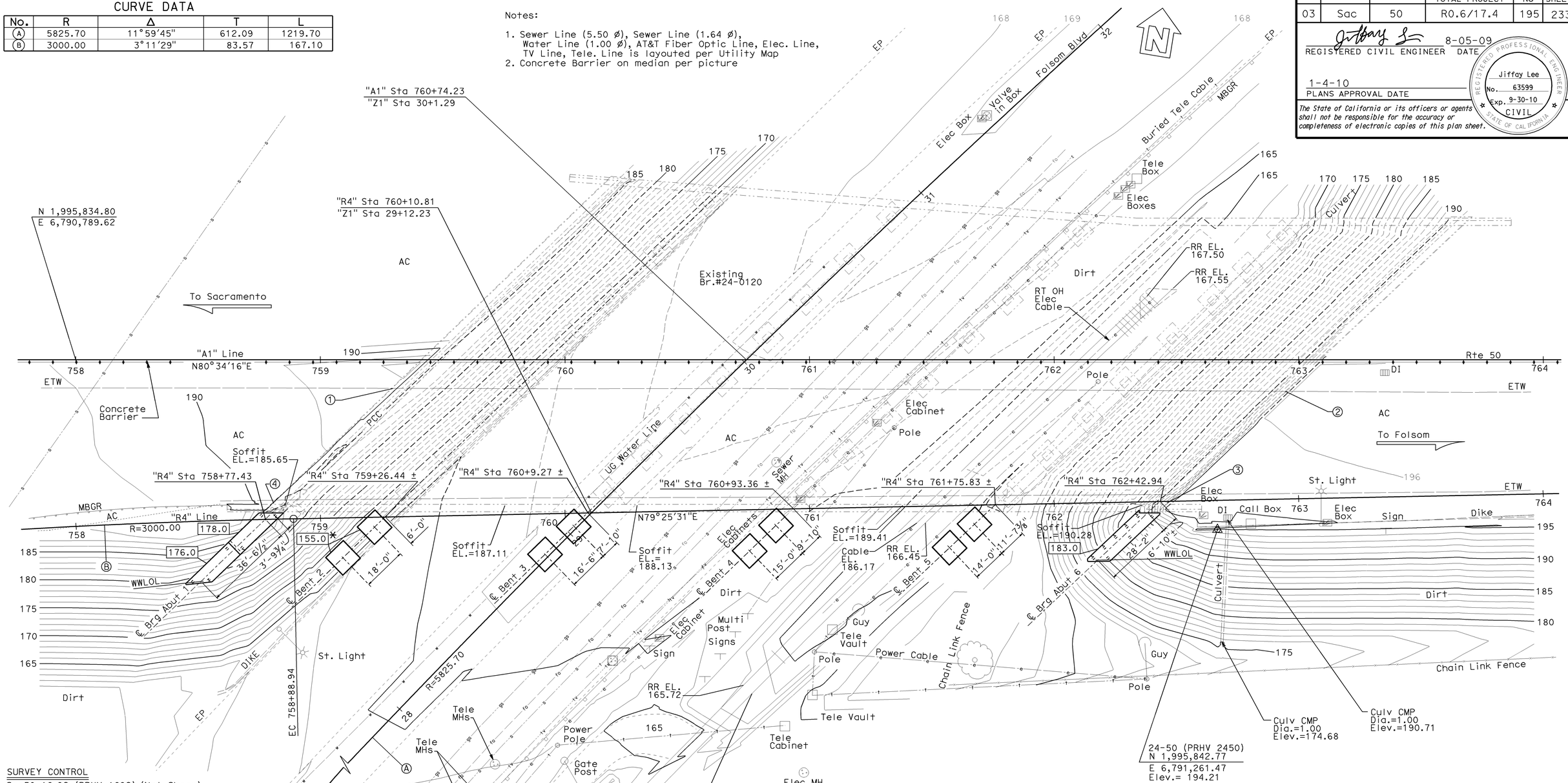

SURVEY CONTROL

Sac50 16.92 (PRHV 1692) (Not Shown)
Fnd CADT Brass Disk Set in Concrete
58.47 Lt. "A1" Line ℄ Rte 50
Sta. 753+61.01
N 1,995,812.33
E 6,790,344.35
Elev.=175.76

24-50 (PRHV 2450)
Fnd CADT Brass Disk Set in Concrete
69.43 Rt. "A1" line ℄ Rte 50
Sta. 762+66.78
N 1,995,842.77
E 6,791,261.47
Elev.= 194.21

Bridge Location (PI Calculated PN Points)

① - 11.68 Rt. "A1" Line Sta.759+29.65, Elev.=191.72± (AC Overlay)
② - 12.92 Rt. "A1" Line Sta.762+94.54, Elev.=196.21± (AC Overlay)
③ - 58.50 Rt. "A1" Line Sta.762+46.09, Elev.=195.03± (AC Overlay)
④ - 58.69 Rt. "A1" Line Sta.758+80.93, Elev.=190.22± (AC Overlay)

LEGEND:

Indicates bottom of footing elevation.

* Indicates typical footing elevation, except as noted.

Note: Not all piles shown.

PRELIMINARY INVESTIGATION SECTION								
SCALE	VERT.DATUM NGVD29	PHOTOGRAMMETRY AS OF: X						
1"=20'	HORZ.DATUM NAD83 (91.35)	SURVEYED	BY	District/PI North	CHECKED	BY	Tim Mason	06/2008
ALIGNMENT TIES Dist. Traverse Sheet		DRAFTED	BY	Sharon Zheng 06/2008	CHECKED	BY	T.Zolnikova	06/2008

DESIGN	BY J. Lee	CHECKED G. Slocum	
DETAILS	BY C. Figuerres	CHECKED G. Slocum	
QUANTITIES	BY J. Lynch	CHECKED G. Zuniga	

STATE OF CALIFORNIA
DEPARTMENT OF TRANSPORTATION

DIVISION OF ENGINEERING SERVICES
STRUCTURE DESIGN
DESIGN BRANCH 02

BRIDGE NO. 24-0120R
POST MILE 17.01

NATOMA OH (WIDEN)
FOUNDATION PLAN

STRUCTURES FOUNDATION PLAN SHEET (ENGLISH) (REV. 10/25/05)

ORIGINAL SCALE IN INCHES FOR REDUCED PLANS 0 1 2 3

CU 03
EA 1C12U4

DISREGARD PRINTS BEARING EARLIER REVISION DATES

REVISION DATES: 6-19-08 3-25-09 5-07-09

SHEET 3 OF 22

FILE => 24-0120r-e-fp101.dgn

USERNAME => trcarol DATE PLOTTED => 05-JAN-2010 TIME PLOTTED => 12:37

DIST	COUNTY	ROUTE	POST MILES TOTAL PROJECT	SHEET No	TOTAL SHEETS
03	Sac	50	R0.6/17.4	196	233

REGISTERED CIVIL ENGINEER 8-05-09 DATE

1-4-10
PLANS APPROVAL DATE

The State of California or its officers or agents shall not be responsible for the accuracy or completeness of electronic copies of this plan sheet.

REGISTERED PROFESSIONAL ENGINEER Jiffay Lee No. 63599 Exp. 9-30-10 CIVIL STATE OF CALIFORNIA

Notes:

1. For Section A-A, see "Abutment Details No. 1" sheet.
2. For Bearing Pad Detail, see "Abutment Details No. 3" sheet.
3. For Backwall Base Detail, see "Abutment Details No. 3" sheet.
4. For Steel Pile Anchor Detail, see "Abutment Details No. 3" sheet.
5. For Wingwall removal, see "Abutment Detials No. 4" sheet.
6. For Detail 1, see "Abutment Details No. 4" sheet.
7. Interior faces of left and right shear keys to be parallel.
8. For Section Q-Q, see "Abutment Details No. 1" sheet.
9. Place abutment seat ties normal to ℄ Brg, and space along ℄ Brg from one end of abut to the other.
10. Section S-S typical for Abutments 1 and 6.
11. Asphaltic joint seal on widening only. Existing joint seal to remain.

Legend:

- Indicates vertical piles
- Indicates 1:3 battered piles
- Indicates existing structure
- Indicates bridge and barrier removal (Portion)

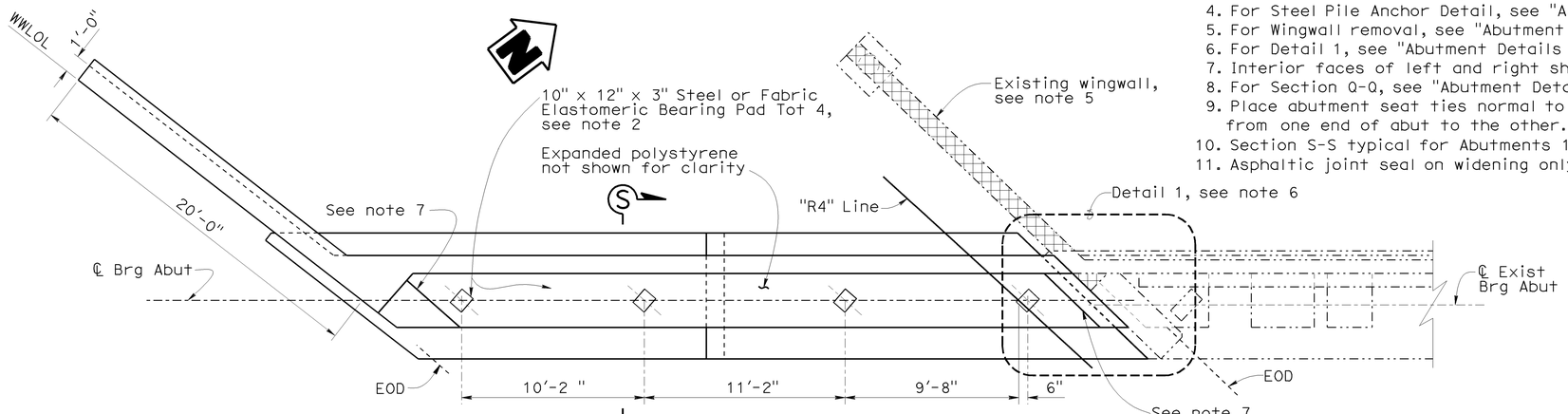

PLAN
1/4" = 1'-0"

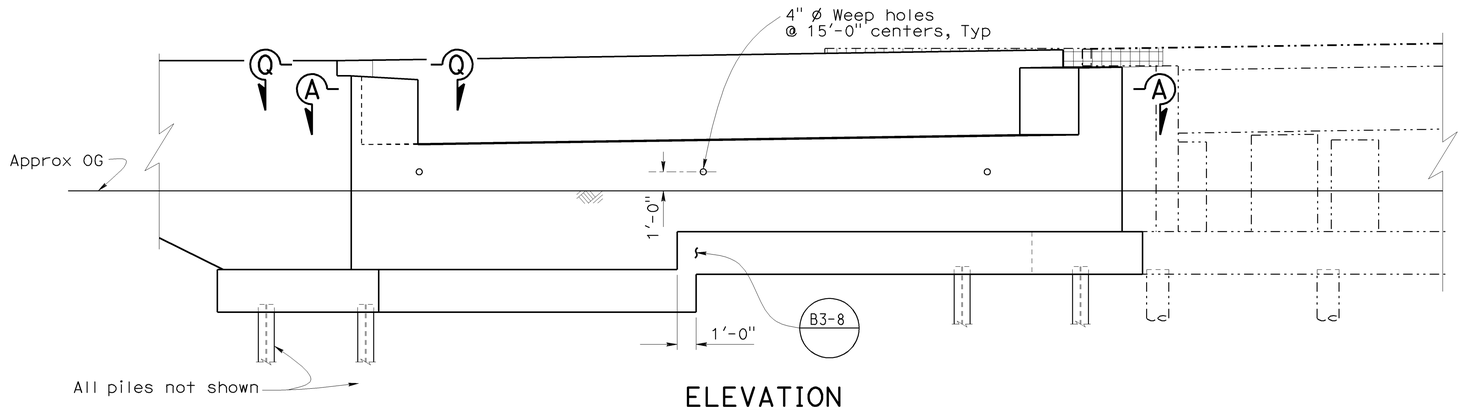

ELEVATION
1/4" = 1'-0"

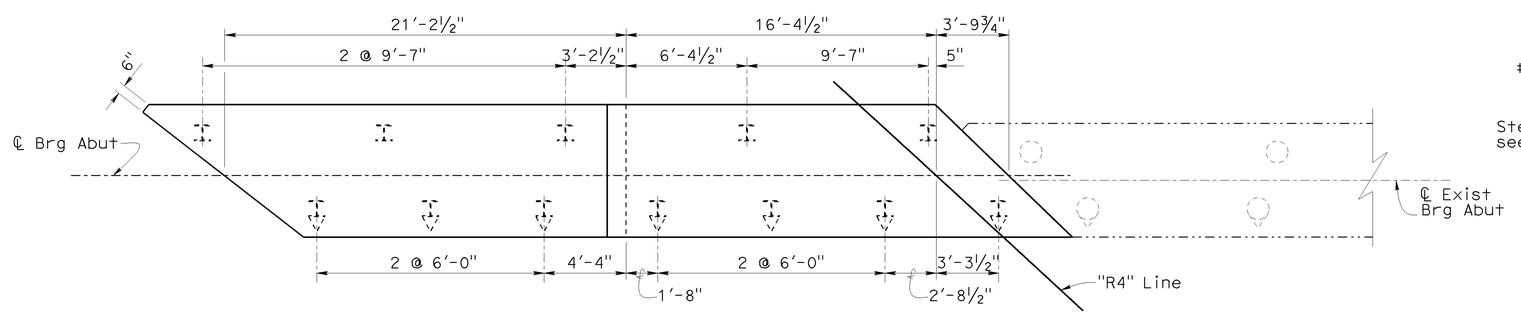

PILE LAYOUT
1/4" = 1'-0"

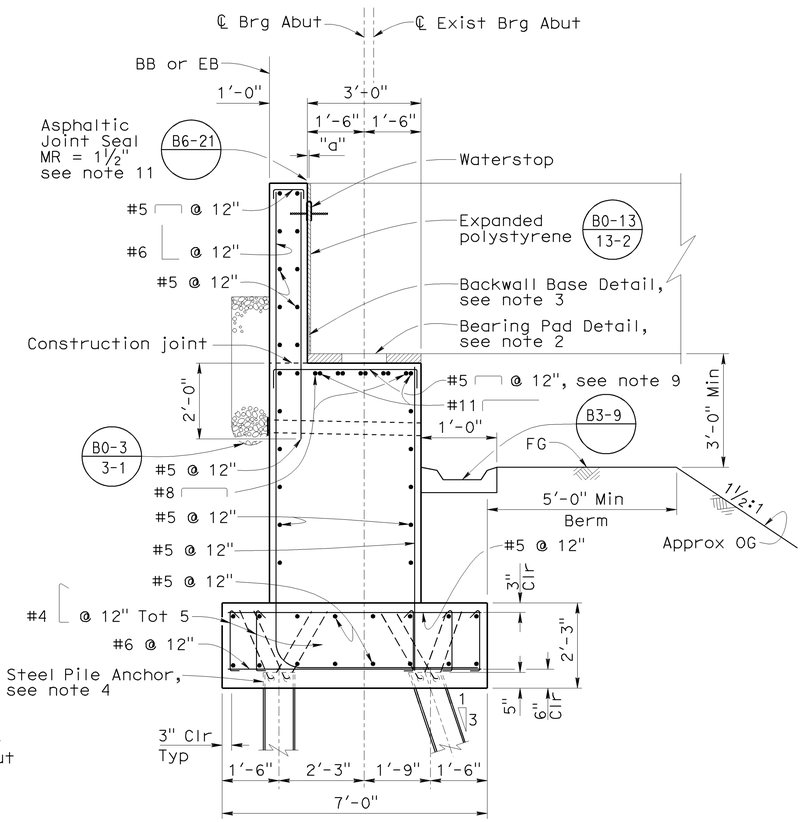

SECTION S-S
1/2" = 1'-0"
See note 10

NOTE:
THE CONTRACTOR SHALL VERIFY ALL CONTROLLING FIELD DIMENSIONS BEFORE ORDERING OR FABRICATING ANY MATERIAL.

	BY	CHECKED
DESIGN	J. Lee	G. Slocum
DETAILS	C. Figuerres	G. Slocum
QUANTITIES	J. Lynch	G. Zuniga

STATE OF CALIFORNIA
DEPARTMENT OF TRANSPORTATION

DIVISION OF ENGINEERING SERVICES
STRUCTURE DESIGN
DESIGN BRANCH 2

BRIDGE NO. 24-0120R
POST MILE 17.01

NATOMA OVERHEAD (WIDEN)
ABUTMENT 1 LAYOUT

STRUCTURES DESIGN DETAIL SHEET (ENGLISH) (REV. 10/25/05)

ORIGINAL SCALE IN INCHES FOR REDUCED PLANS 0 1 2 3

CU 03
EA 1C12U4

DISREGARD PRINTS BEARING EARLIER REVISION DATES

REVISION DATES: 2-04-09 5-04-09 5-08-09 6-08-09 6-11-09

SHEET 4 OF 22

FILE => 24-0120r-h-abut1o01.dgn

USERNAME => rrcarol DATE PLOTTED => 05-JAN-2010 TIME PLOTTED => 12:37

DIST	COUNTY	ROUTE	POST MILES TOTAL PROJECT	SHEET No	TOTAL SHEETS
03	Sac	50	R0.6/17.4	197	233

REGISTERED CIVIL ENGINEER 8-05-09 DATE

1-4-10
PLANS APPROVAL DATE

REGISTERED PROFESSIONAL ENGINEER Jiffay Lee No. 63599 Exp. 9-30-10 CIVIL STATE OF CALIFORNIA

The State of California or its officers or agents shall not be responsible for the accuracy or completeness of electronic copies of this plan sheet.

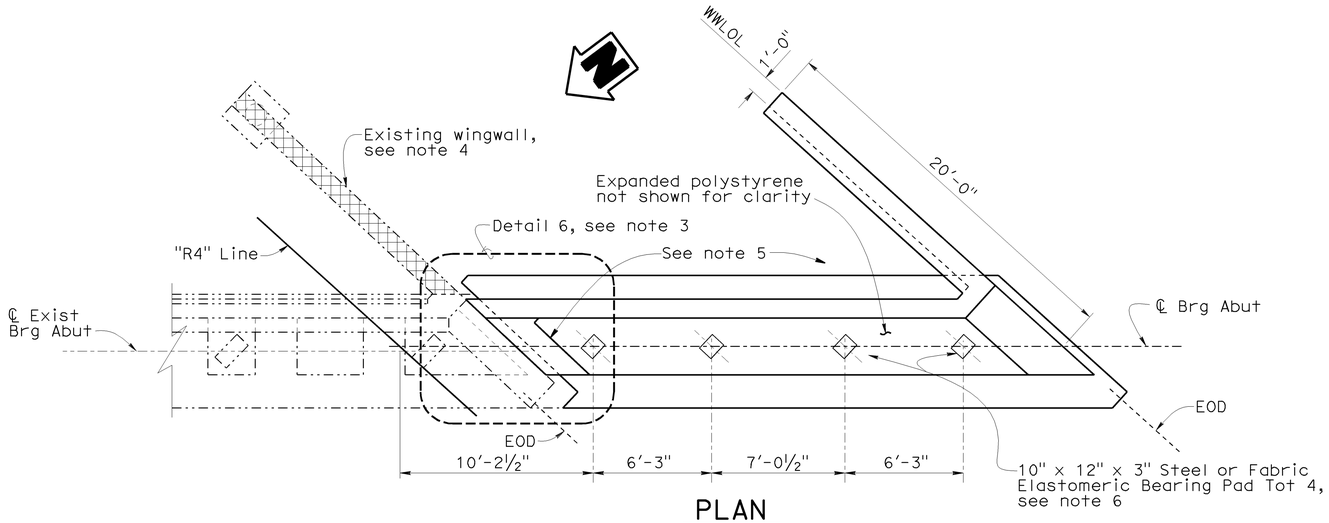

PLAN
¼" = 1'-0"

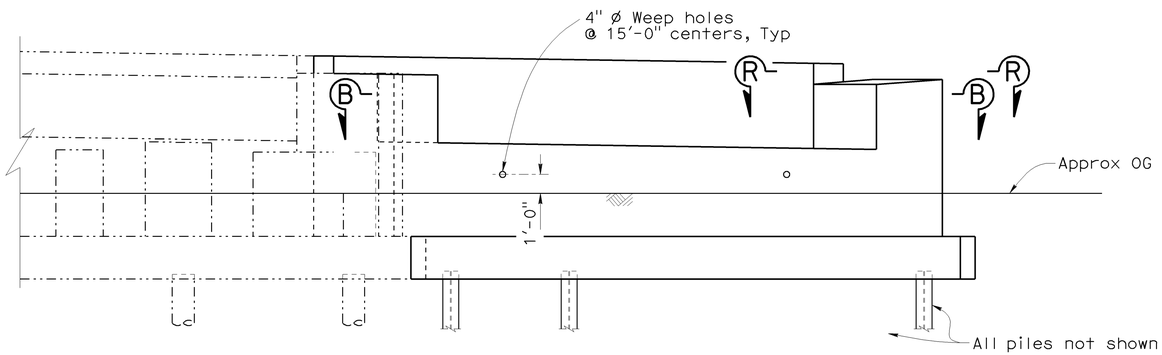

ELEVATION
¼" = 1'-0"

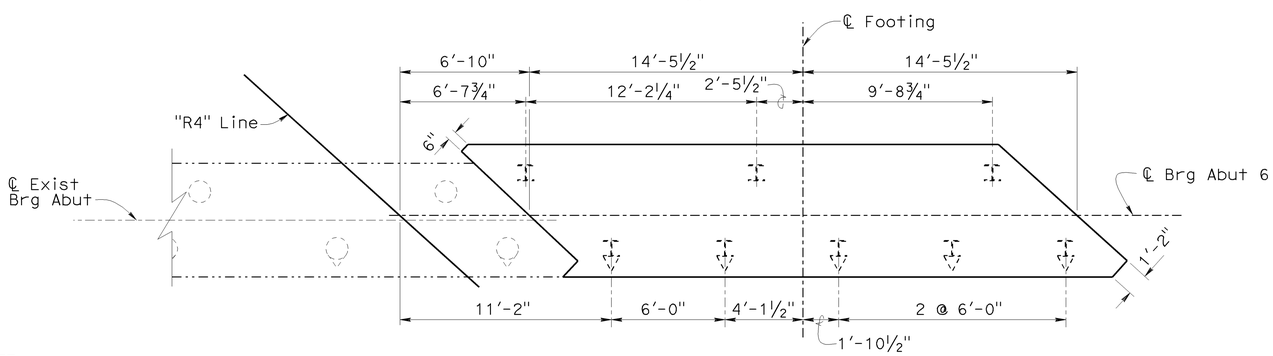

PILE LAYOUT
¼" = 1'-0"

NOTE:
THE CONTRACTOR SHALL VERIFY ALL CONTROLLING FIELD DIMENSIONS BEFORE ORDERING OR FABRICATING ANY MATERIAL.

Notes:

1. For typical Abutment Section, see "Abutment 1 Layout" sheet.
2. For Section B-B, see "Abutment Details No. 1" sheet.
3. For Detail 6, see "Abutment Details No. 5" sheet.
4. For Wingwall removal, see "Abutment Details No. 4" sheet.
5. Interior faces of left and right shear keys to be parallel.
6. For Bearing Pad Details, see "Abutment Details No. 3" sheet.
7. For Section R-R, see "Abutment Details No. 1" sheet.

Legend:

- Indicates vertical piles
- Indicates 1:3 battered piles
- Indicates existing structure
- Indicates bridge removal (Portion)

	BY	CHECKED
DESIGN	J. Lee	G. Slocum
DETAILS	C. Figuerres	G. Slocum
QUANTITIES	J. Lynch	G. Zuniga

STATE OF CALIFORNIA
DEPARTMENT OF TRANSPORTATION

DIVISION OF ENGINEERING SERVICES
STRUCTURE DESIGN
DESIGN BRANCH 2

BRIDGE NO. 24-0120R
POST MILE 17.01

NATOMA OVERHEAD (WIDEN)
ABUTMENT 6 LAYOUT

STRUCTURES DESIGN DETAIL SHEET (ENGLISH) (REV. 10/25/05)

ORIGINAL SCALE IN INCHES FOR REDUCED PLANS 0 1 2 3

CU 03
EA 1C12U4

DISREGARD PRINTS BEARING EARLIER REVISION DATES

REVISION DATES: 4-16-09 4-30-09 5-04-09 6-02-09

SHEET 5 OF 22

FILE => 24-0120r-h-abut1o02.dgn

USERNAME => trcarol DATE PLOTTED => 05-JAN-2010 TIME PLOTTED => 12:37

DIST	COUNTY	ROUTE	POST MILES TOTAL PROJECT	SHEET No	TOTAL SHEETS
03	Sac	50	R0.6/17.4	198	233

REGISTERED CIVIL ENGINEER 8-05-09 DATE

1-4-10
PLANS APPROVAL DATE

REGISTERED PROFESSIONAL ENGINEER Jiffay Lee No. 63599 Exp. 9-30-10 CIVIL STATE OF CALIFORNIA

The State of California or its officers or agents shall not be responsible for the accuracy or completeness of electronic copies of this plan sheet.

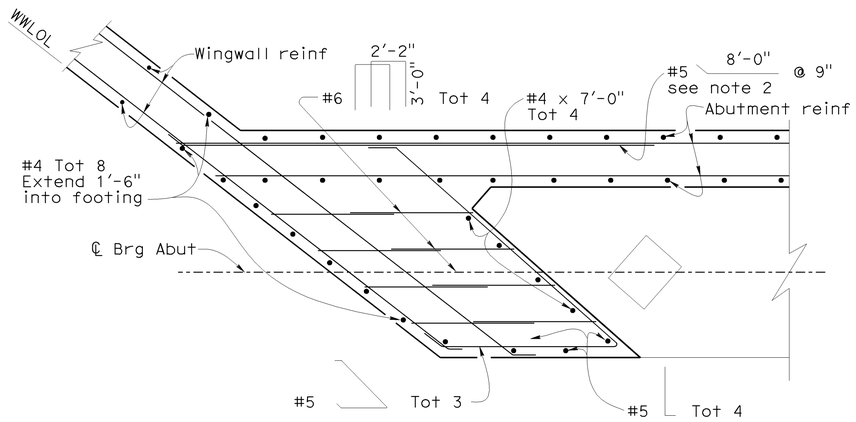

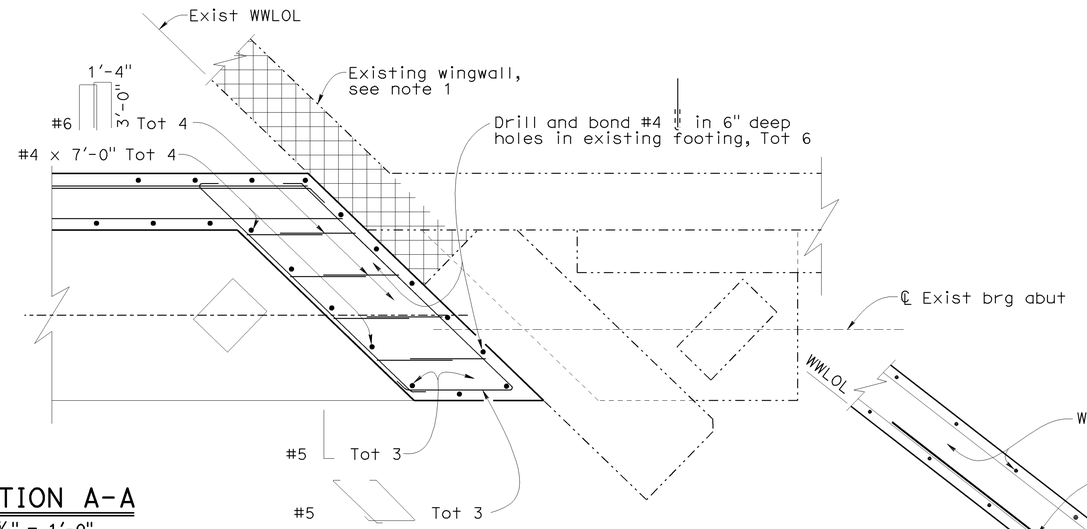

SECTION A-A

3/4" = 1'-0"

(ABUTMENT 1)

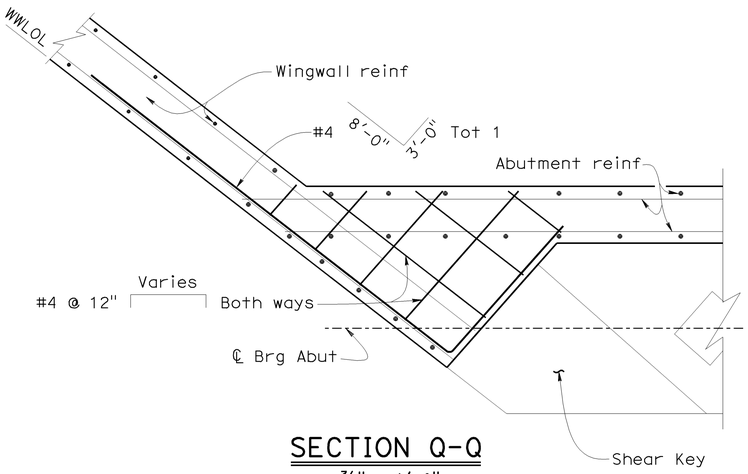

SECTION Q-Q

3/4" = 1'-0"

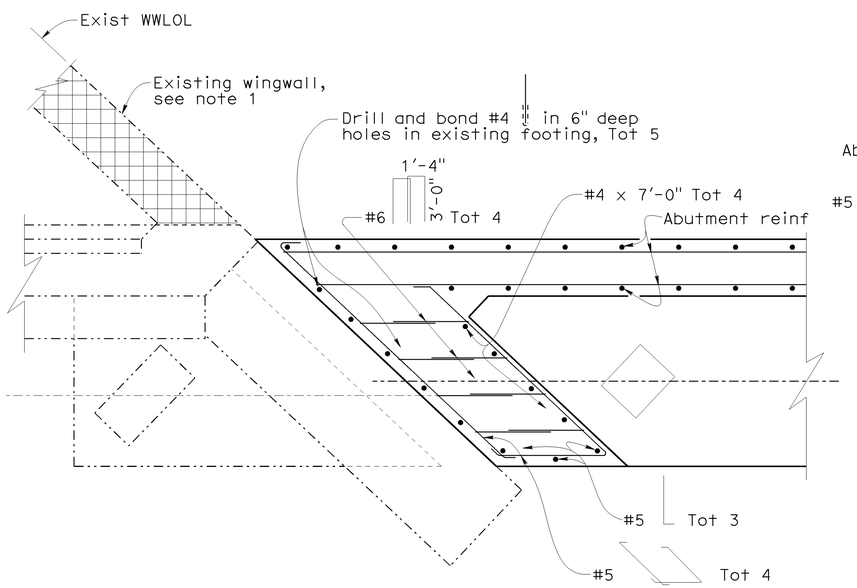

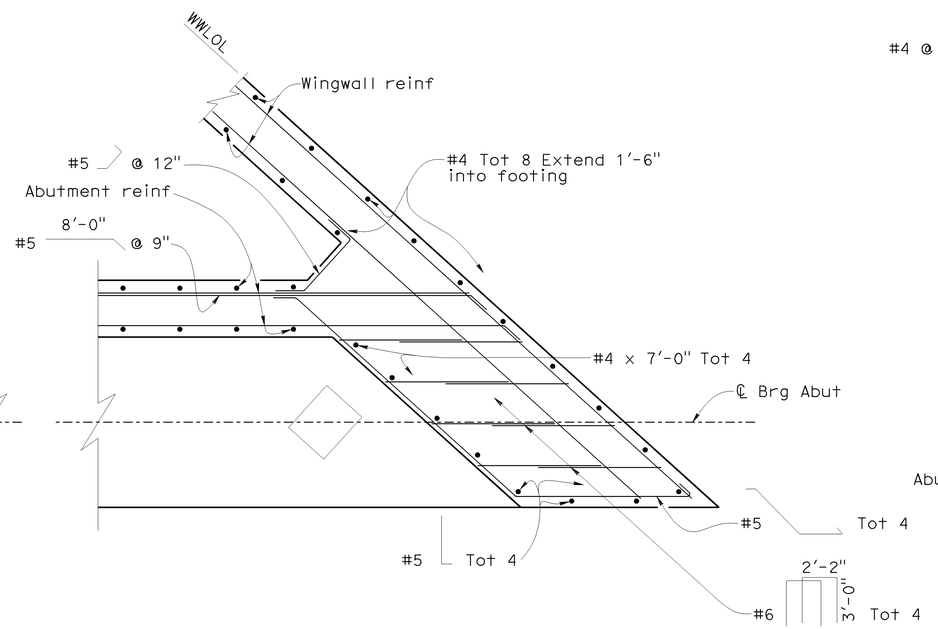

SECTION B-B

3/4" = 1'-0"

(ABUTMENT 6)

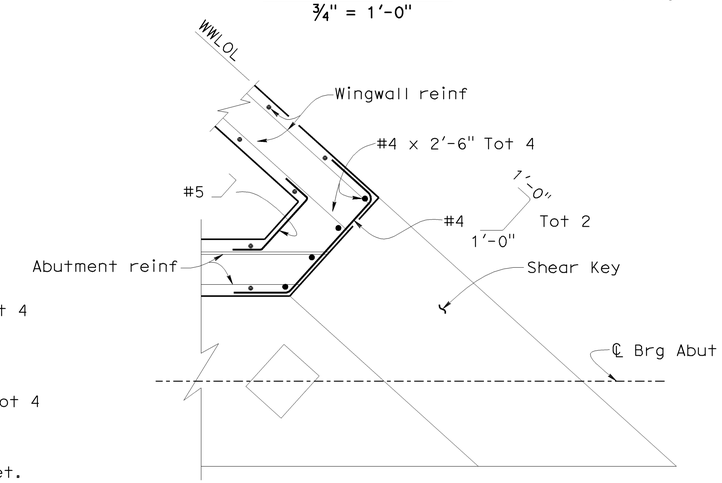

SECTION R-R

3/4" = 1'-0"

NOTE:
THE CONTRACTOR SHALL VERIFY ALL CONTROLLING FIELD DIMENSIONS BEFORE ORDERING OR FABRICATING ANY MATERIAL.

Notes:

1. For Wingwall removal, see "Abutment Detials No. 4" sheet.
2. Horizontal backwall bars equally spaced from top of backwall to the top of abutment footing.

Legend:

-·-·- Indicates existing structure

Indicates bridge removal (Portion)

	BY	CHECKED
DESIGN	J. Lee	G. Slocum
DETAILS	C. Figuerres	G. Slocum
QUANTITIES	J. Lynch	G. Zuniga

STATE OF CALIFORNIA
DEPARTMENT OF TRANSPORTATION

DIVISION OF ENGINEERING SERVICES
STRUCTURE DESIGN
DESIGN BRANCH 2

BRIDGE NO. 24-0120R
POST MILE 17.01

NATOMA OVERHEAD (WIDEN)
ABUTMENT DETAILS NO. 1

STRUCTURES DESIGN DETAIL SHEET (ENGLISH) (REV. 10/25/05)

ORIGINAL SCALE IN INCHES FOR REDUCED PLANS 0 1 2 3

CU 03
EA 1C12U4

DISREGARD PRINTS BEARING EARLIER REVISION DATES

REVISION DATES: 4-16-09 5-05-09 5-11-09 5-12-09 5-18-09 6-02-09

SHEET 6 OF 22

FILE => 24-0120r-h-adet01.dgn

USERNAME => trcarol DATE PLOTTED => 05-JAN-2010 TIME PLOTTED => 12:37

DIST	COUNTY	ROUTE	POST MILES TOTAL PROJECT	SHEET No	TOTAL SHEETS
03	Sac	50	R0.6/17.4	199	233

REGISTERED CIVIL ENGINEER 8-05-09 DATE

1-4-10
PLANS APPROVAL DATE

REGISTERED PROFESSIONAL ENGINEER Jiffay Lee No. 63599 Exp. 9-30-10 CIVIL STATE OF CALIFORNIA

The State of California or its officers or agents shall not be responsible for the accuracy or completeness of electronic copies of this plan sheet.

Notes:

1. Shear Key Detail for Abutment 1 shown, Abutment 6 similar.
2. Wingwall Elevation and Abutment Footing for Abutment 1 shown, Abutment 6 similar.
3. Footing Reinforcement Detail for Abutment 1 shown, Abutment 6 similar.

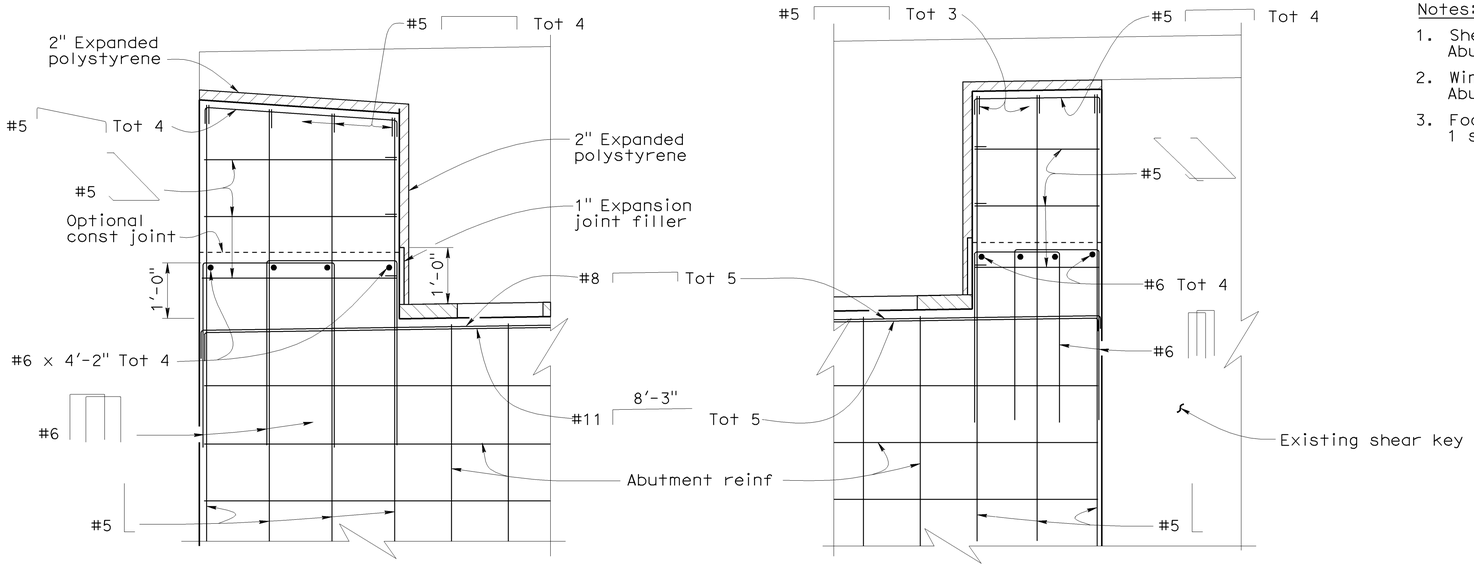

SHEAR KEY DETAIL

3/4" = 1'-0"
See note 1

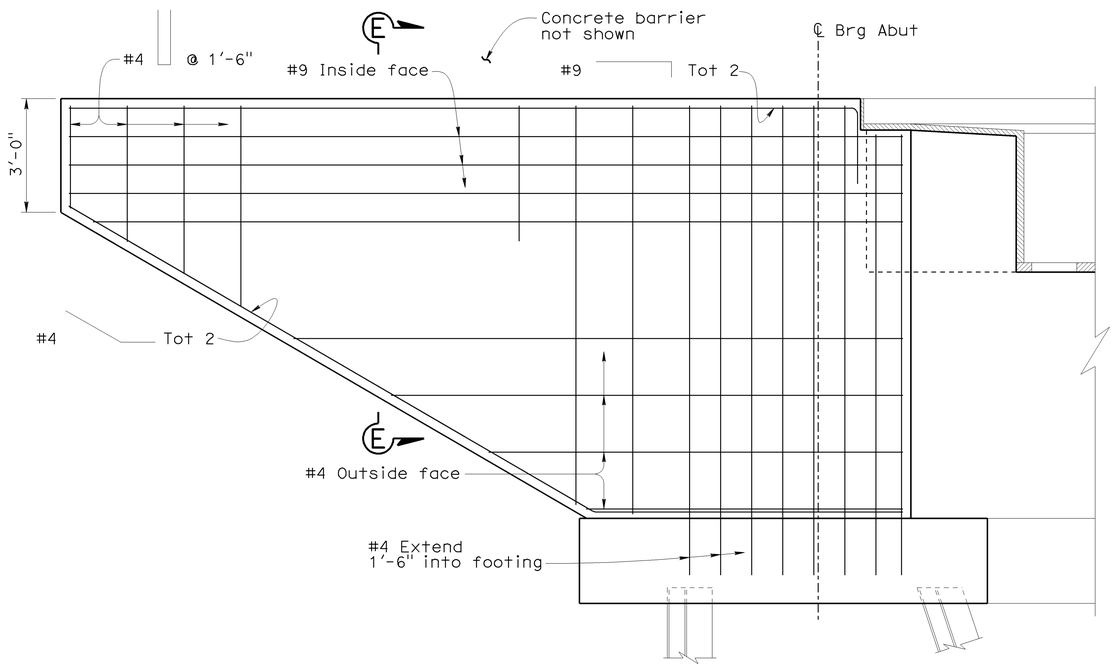

WINGWALL ELEVATION

1/2" = 1'-0"
See note 2

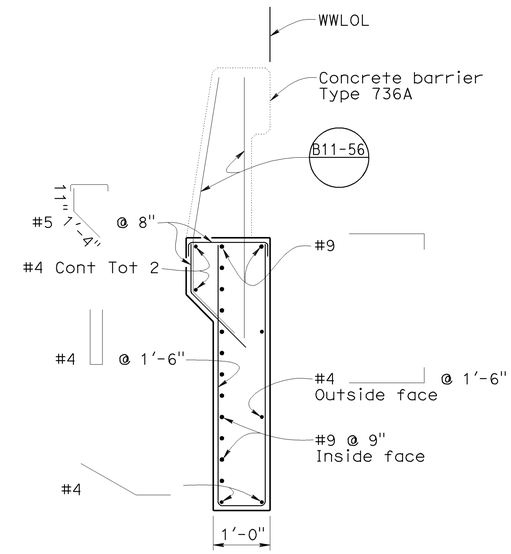

SECTION E-E

3/4" = 1'-0"

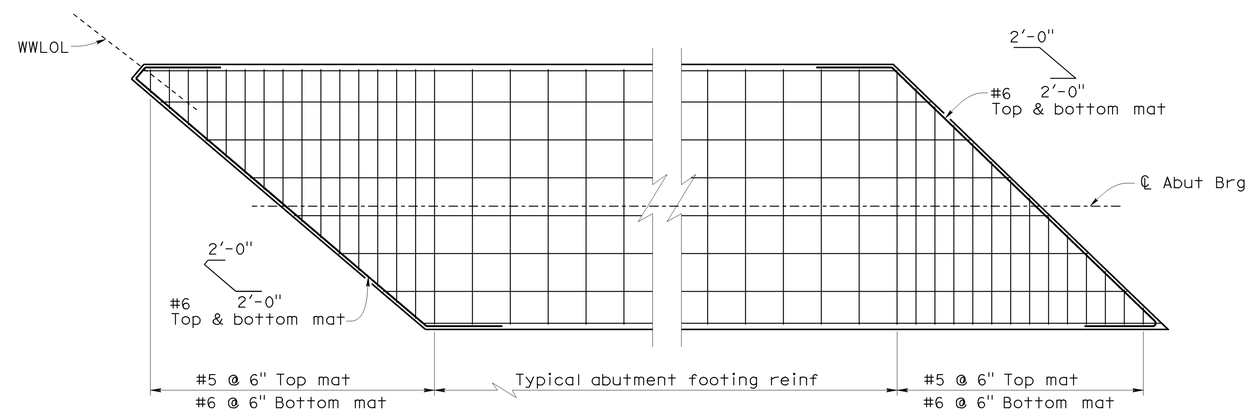

FOOTING REINFORCEMENT DETAIL

1/2" = 1'-0"
See note 2

NOTE:
THE CONTRACTOR SHALL VERIFY ALL CONTROLLING FIELD DIMENSIONS BEFORE ORDERING OR FABRICATING ANY MATERIAL.

	BY	CHECKED
DESIGN	J. Lee	G. Slocum
DETAILS	C. Figuerres	G. Slocum
QUANTITIES	J. Lynch	G. Zuniga

STATE OF CALIFORNIA
DEPARTMENT OF TRANSPORTATION

DIVISION OF ENGINEERING SERVICES
STRUCTURE DESIGN
DESIGN BRANCH 2

BRIDGE NO. 24-0120R
POST MILE 17.01

NATOMA OVERHEAD (WIDEN)
ABUTMENT DETAILS NO. 2

STRUCTURES DESIGN DETAIL SHEET (ENGLISH) (REV. 10/25/05)

ORIGINAL SCALE IN INCHES FOR REDUCED PLANS 0 1 2 3

CU 03
EA 1C12U4

DISREGARD PRINTS BEARING EARLIER REVISION DATES

REVISION DATES: 4-13-09 5-04-09 5-08-09 5-11-09 6-02-09

SHEET 7 OF 22

FILE => 24-0120r-h-adet02.dgn

USERNAME => tripierce DATE PLOTTED => 05-JAN-2010 TIME PLOTTED => 10:58

DIST	COUNTY	ROUTE	POST MILES TOTAL PROJECT	SHEET No	TOTAL SHEETS
03	Sac	50	R0.6/17.4	200	233

REGISTERED CIVIL ENGINEER 8-05-09 DATE

1-4-10
PLANS APPROVAL DATE

The State of California or its officers or agents shall not be responsible for the accuracy or completeness of electronic copies of this plan sheet.

REGISTERED PROFESSIONAL ENGINEER Jiffay Lee No. 63599 Exp. 9-30-10 CIVIL STATE OF CALIFORNIA

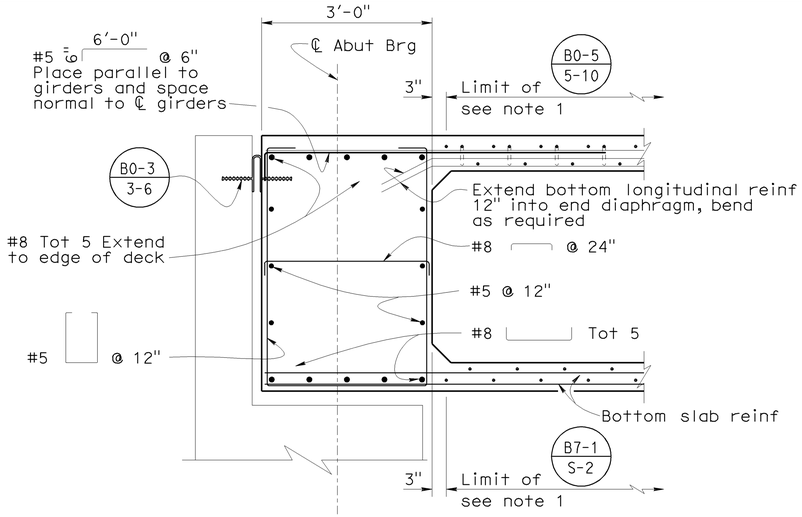

END DIAPHRAGM SECTION

3/4" = 1'-0"

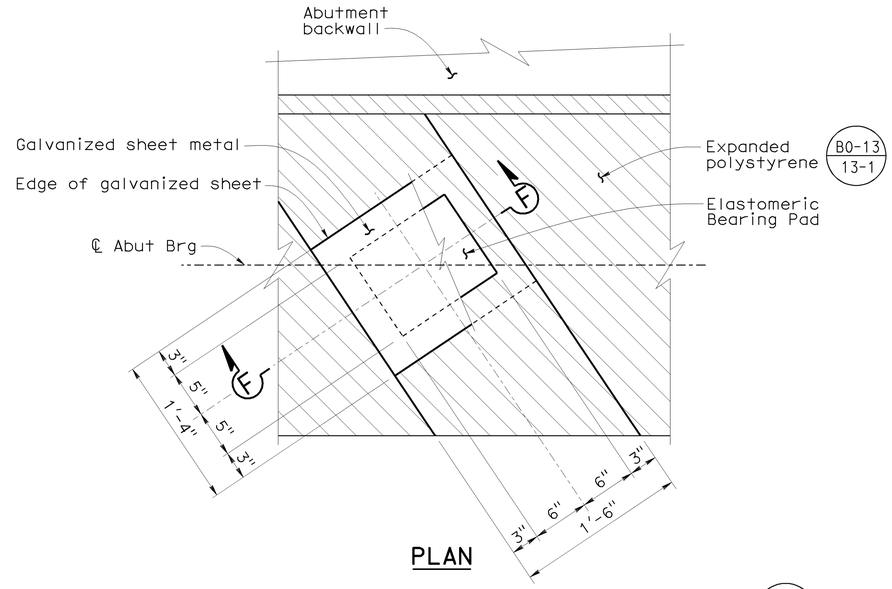

PLAN

Notes:

1. For limits of transverse bars in deck and soffit slabs, see "Girder Detail" sheet.

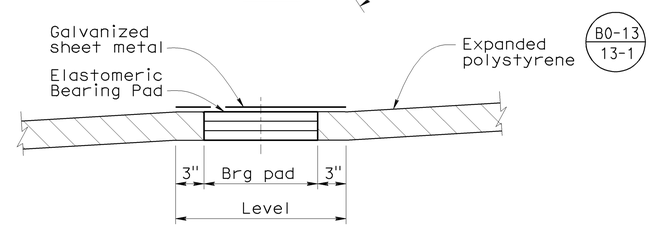

SECTION F-F

BEARING PAD DETAIL

1 1/2" = 1'-0"

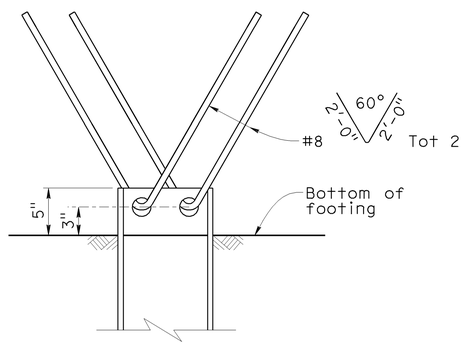

ELEVATION

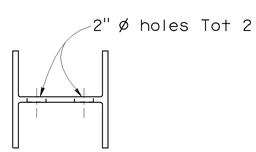

PLAN

STEEL PILE ANCHOR DETAIL

1 1/2" = 1'-0"

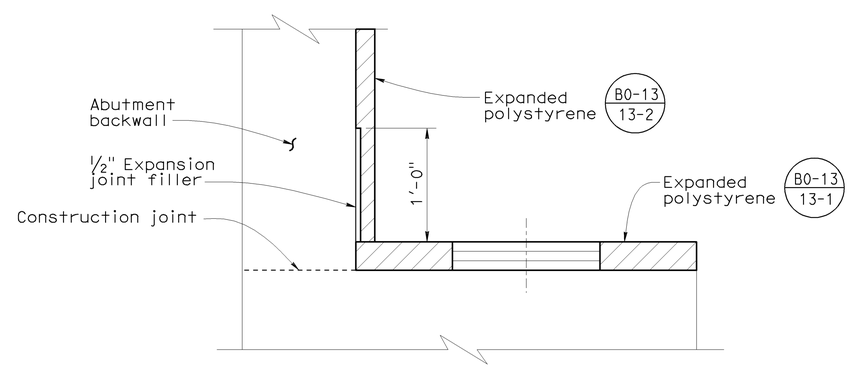

BACKWALL BASE DETAIL

1 1/2" = 1'-0"

NOTE:
THE CONTRACTOR SHALL VERIFY ALL CONTROLLING FIELD DIMENSIONS BEFORE ORDERING OR FABRICATING ANY MATERIAL.

	BY	CHECKED
DESIGN	J. Lee	G. Slocum
DETAILS	C. Figuerres	G. Slocum
QUANTITIES	J. Lynch	G. Zuniga

STATE OF CALIFORNIA
DEPARTMENT OF TRANSPORTATION

DIVISION OF ENGINEERING SERVICES
STRUCTURE DESIGN
DESIGN BRANCH 2

BRIDGE NO. 24-0120R
POST MILE 17.01

NATOMA OVERHEAD (WIDEN)
ABUTMENT DETAILS NO. 3

STRUCTURES DESIGN DETAIL SHEET (ENGLISH) (REV. 10/25/05)

ORIGINAL SCALE IN INCHES FOR REDUCED PLANS 0 1 2 3

CU 03
EA 1C12U4

DISREGARD PRINTS BEARING EARLIER REVISION DATES

REVISION DATES: 4-13-09 4-30-09 5-05-09 5-06-09 5-11-09

SHEET 8 OF 22

FILE => 24-0120r-h-adet03.dgn

USERNAME => rtpierce DATE PLOTTED => 05-JAN-2010 TIME PLOTTED => 10:58