NH-P070(123)E

Dist	COUNTY	ROUTE	POST MILES TOTAL PROJECT	SHEET No.	TOTAL SHEETS
03	Yub	70	R7.0/13.6	1	113

STATE OF CALIFORNIA

DEPARTMENT OF TRANSPORTATION

PROJECT PLANS FOR CONSTRUCTION ON

STATE HIGHWAY

IN YUBA COUNTY AT OLIVEHURST AND LINDA FROM 0.3 MILE WEST OF McGOWAN PARKWAY OVERCROSSING TO THE YUBA RIVER BRIDGE AND OVERHEAD

TO BE SUPPLEMENTED BY STANDARD PLANS DATED MAY 2006

INDEX OF PLANS

SHEET No.	DESCRIPTION
1	TITLE AND LOCATION MAP
2-8	TYPICAL CROSS SECTIONS
9-35	CONSTRUCTION DETAILS
36-38	EROSION CONTROL PLAN AND QUANTITIES
39-51	UTILITY PLAN
52	CONSTRUCTION AREA SIGNS
53-60	STAGE CONSTRUCTION
61	TRAFFIC HANDLING QUANTITIES
62-64	PAVEMENT DELINEATION QUANTITIES
65-72	SIGN PLAN, DETAILS AND QUANTITIES
73-77	SUMMARY OF QUANTITIES
78-82	LANDSCAPE DETAILS
83-85	ELECTRICAL PLANS
86-113	NEW AND REVISED STANDARD PLANS

THE STANDARD PLANS LIST APPLICABLE TO THIS CONTRACT IS INCLUDED IN THE NOTICE TO BIDDERS AND SPECIAL PROVISIONS BOOK.

LOCATION MAP

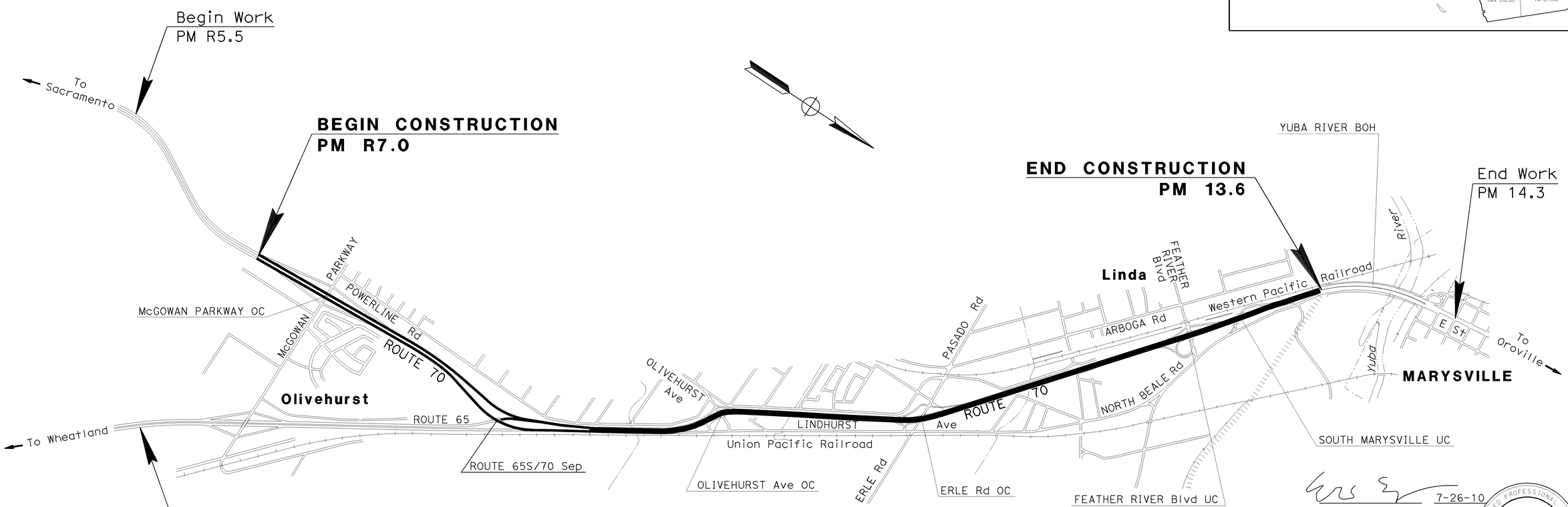

NO SCALE

THE CONTRACTOR SHALL POSSESS THE CLASS (OR CLASSES) OF LICENSE AS SPECIFIED IN THE "NOTICE TO BIDDERS."

7-26-10
PROJECT ENGINEER DATE
REGISTERED CIVIL ENGINEER

REGISTERED PROFESSIONAL ENGINEER
ERIC NORMAN SOUZA
No. 75706
Exp. 06-30-12
CIVIL
STATE OF CALIFORNIA

July 26, 2010
PLANS APPROVAL DATE

THE STATE OF CALIFORNIA OR ITS OFFICERS OR AGENTS SHALL NOT BE RESPONSIBLE FOR THE ACCURACY OR COMPLETENESS OF SCANNED COPIES OF THIS PLAN SHEET.

CONTRACT No.	03-1F4604
PROJECT ID	0300020026

PROJECT MANAGER MIKE BARTLETT
DESIGN ENGINEER KEVIN ESPINOZA

LAST REVISION 07-12-10
DATE PLOTTED => 25-AUG-2010
TIME PLOTTED => 10:04

Dist	COUNTY	ROUTE	POST MILES TOTAL PROJECT	SHEET No.	TOTAL SHEETS
03	Yub	70	R7.0/13.6	2	113

REGISTERED CIVIL ENGINEER 7-26-10 DATE

7-26-10
PLANS APPROVAL DATE

REGISTERED PROFESSIONAL ENGINEER ERIC NORMAN SOUZA No. 75706 Exp. 06-30-12 CIVIL STATE OF CALIFORNIA

THE STATE OF CALIFORNIA OR ITS OFFICERS OR AGENTS SHALL NOT BE RESPONSIBLE FOR THE ACCURACY OR COMPLETENESS OF SCANNED COPIES OF THIS PLAN SHEET.

NOTES:

1. DIMENSIONS OF THE PAVEMENT STRUCTURES (STRUCTURAL SECTIONS) ARE SUBJECT TO TOLERANCES SPECIFIED IN THE STANDARD SPECIFICATIONS.
2. SUPERELEVATION AS SHOWN OR AS DIRECTED BY THE ENGINEER.
3. FOR DIKE, REPLACE AC SURFACING, RUMBLE STRIP AND GUARD RAIL LOCATIONS, SEE SUMMARY OF QUANTITIES SHEETS.
4. RWMA-O TO BE PLACED 2′ OUTSIDE OF ETW ON MAINLINE ROUTE 70, EXCEPT WHERE SHOWN DIFFERENT, OR AS DIRECTED BY THE ENGINEER.

ABBREVIATIONS

CP - CATCH POINT
HMA-A - HOT MIX ASPHALT (TYPE A)
RWMA-O - RUBBERIZED WARM MIX ASPHALT (OPEN GRADED)

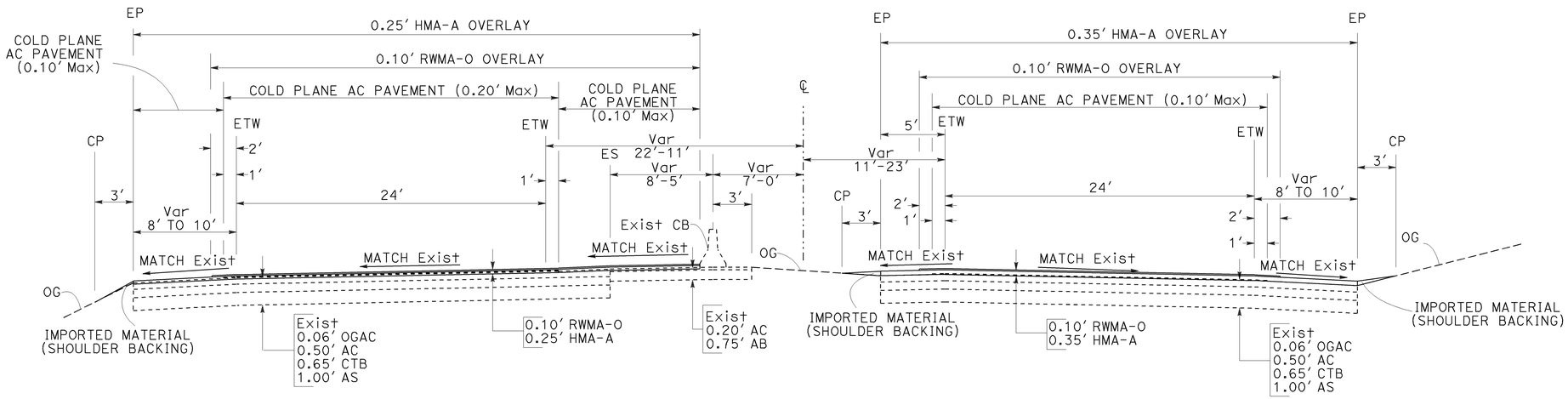

PM R8.60 TO R8.67

WESTBOUND EASTBOUND

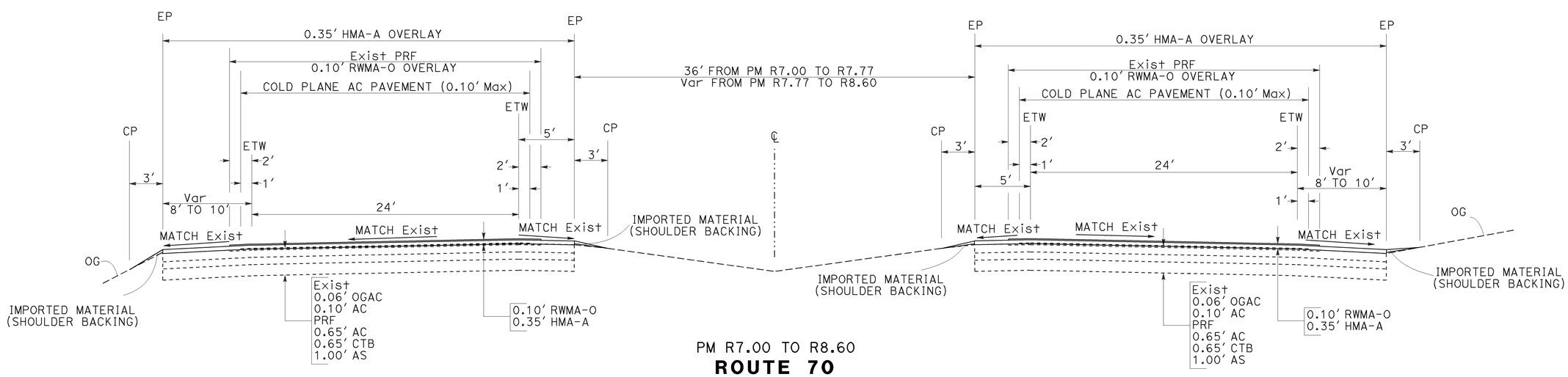

PM R7.00 TO R8.60

ROUTE 70

WESTBOUND EASTBOUND

TYPICAL CROSS SECTIONS

NO SCALE **X-1**

STATE OF CALIFORNIA - DEPARTMENT OF TRANSPORTATION
Caltrans® **PROJECT DEVELOPMENT**

FUNCTIONAL SUPERVISOR: KEVIN ESPINOZA
CALCULATED-DESIGNED BY: JOSE L. VALDEZ
CHECKED BY: ERIC SOUZA
REVISED BY
DATE REVISED

LAST REVISION 05/11/10 | DATE PLOTTED => 25-AUG-2010 | TIME PLOTTED => 10:04

Dist	COUNTY	ROUTE	POST MILES TOTAL PROJECT	SHEET No.	TOTAL SHEETS
03	Yub	70	R7.0/13.6	3	113

REGISTERED CIVIL ENGINEER 7-26-10 DATE

7-26-10
PLANS APPROVAL DATE

REGISTERED PROFESSIONAL ENGINEER
ERIC NORMAN SOUZA
No. 75706
Exp. 06-30-12
CIVIL
STATE OF CALIFORNIA

THE STATE OF CALIFORNIA OR ITS OFFICERS OR AGENTS SHALL NOT BE RESPONSIBLE FOR THE ACCURACY OR COMPLETENESS OF SCANNED COPIES OF THIS PLAN SHEET.

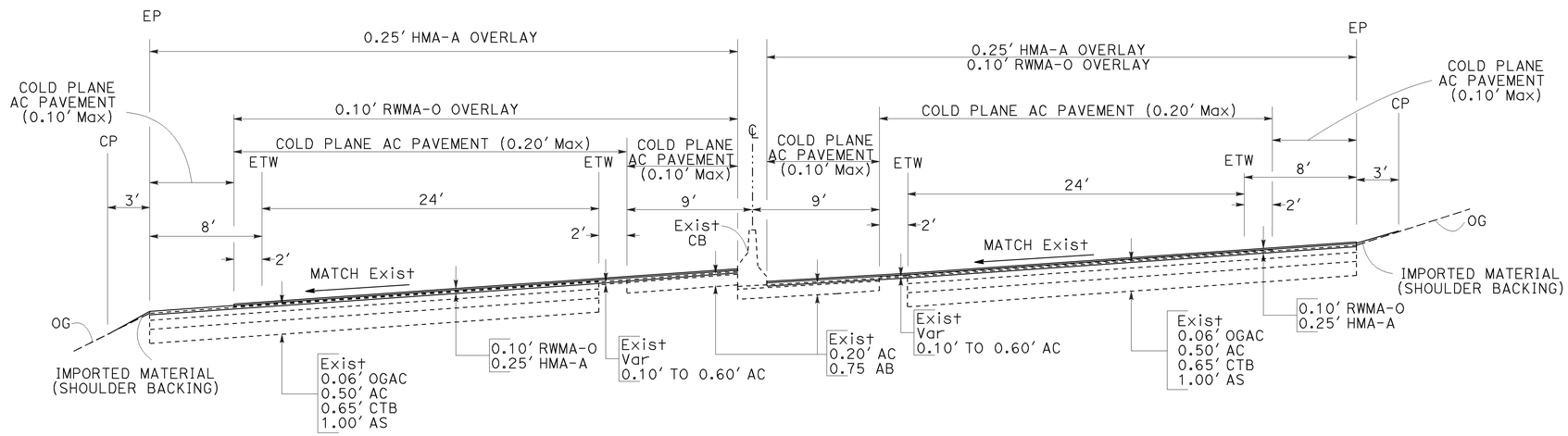

PM R8.95 TO R9.20

WESTBOUND EASTBOUND

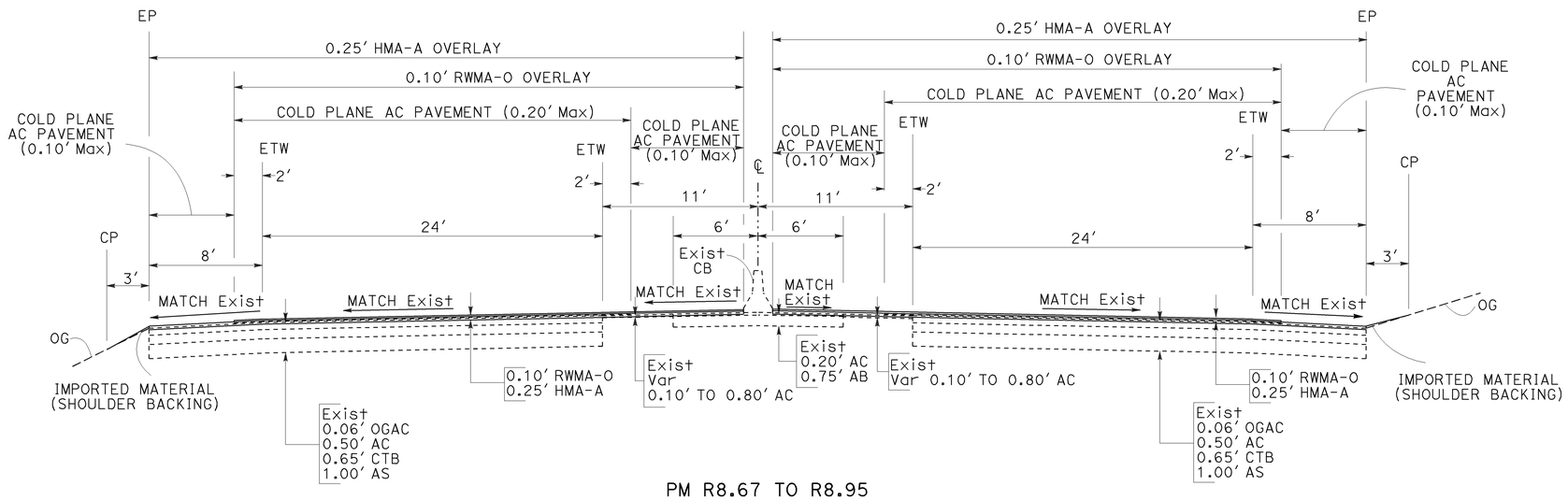

PM R8.67 TO R8.95

WESTBOUND **ROUTE 70** EASTBOUND

TYPICAL CROSS SECTIONS

NO SCALE **X-2**

STATE OF CALIFORNIA - DEPARTMENT OF TRANSPORTATION
Caltrans® **PROJECT DEVELOPMENT**

FUNCTIONAL SUPERVISOR: KEVIN ESPINOZA
CALCULATED-DESIGNED BY: JOSE L. VALDEZ
CHECKED BY: ERIC SOUZA
REVISED BY / DATE REVISED

LAST REVISION 05/01/10 | DATE PLOTTED => 25-AUG-2010 | TIME PLOTTED => 10:04

Dist	COUNTY	ROUTE	POST MILES TOTAL PROJECT	SHEET No.	TOTAL SHEETS
03	Yub	70	R7.0/13.6	4	113

REGISTERED CIVIL ENGINEER 7-26-10 DATE

7-26-10
PLANS APPROVAL DATE

REGISTERED PROFESSIONAL ENGINEER
ERIC NORMAN SOUZA
No. 75706
Exp. 06-30-12
CIVIL
STATE OF CALIFORNIA

THE STATE OF CALIFORNIA OR ITS OFFICERS OR AGENTS SHALL NOT BE RESPONSIBLE FOR THE ACCURACY OR COMPLETENESS OF SCANNED COPIES OF THIS PLAN SHEET.

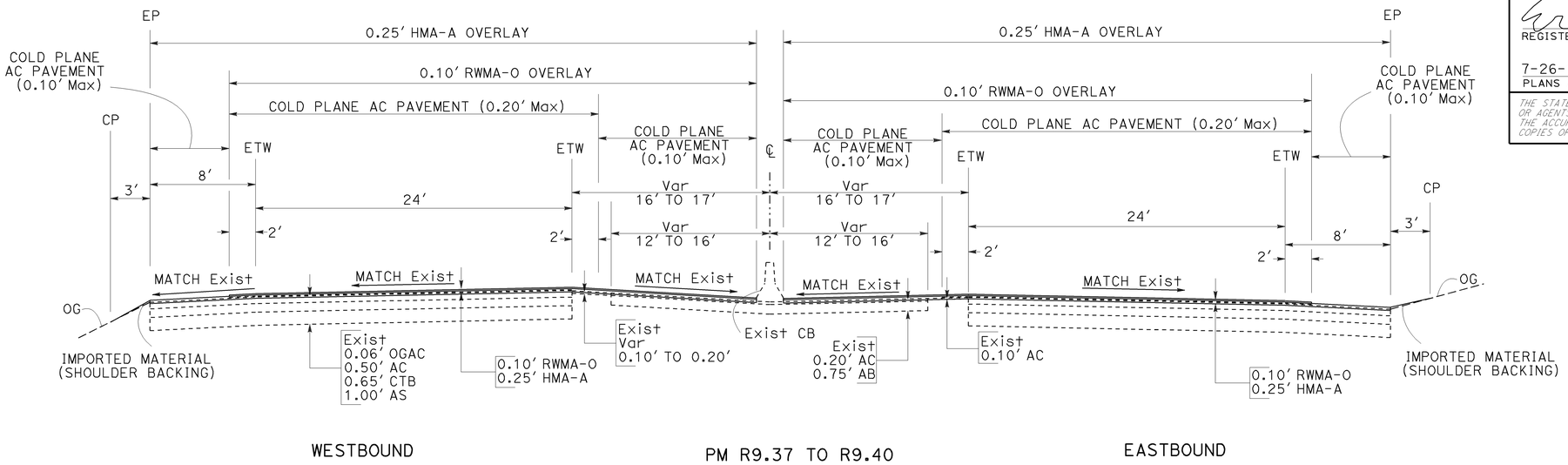

WESTBOUND PM R9.37 TO R9.40 EASTBOUND

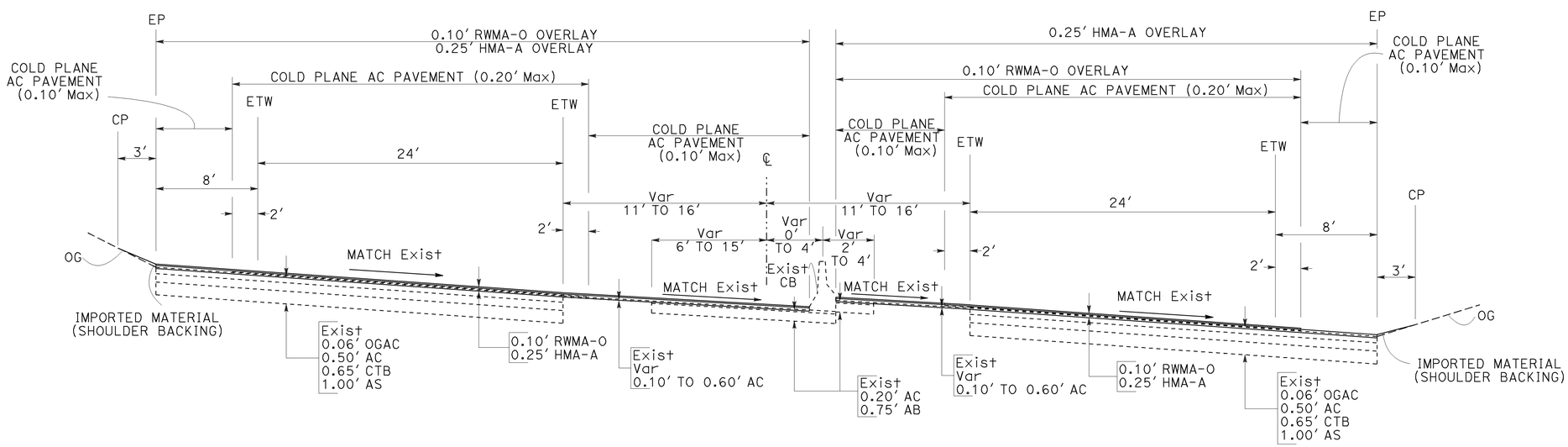

WESTBOUND PM R9.20 TO R9.37 EASTBOUND

ROUTE 70

TYPICAL CROSS SECTIONS

NO SCALE **X-3**

STATE OF CALIFORNIA - DEPARTMENT OF TRANSPORTATION
Caltrans® **PROJECT DEVELOPMENT**

FUNCTIONAL SUPERVISOR: KEVIN ESPINOZA
CALCULATED-DESIGNED BY: JOSE L. VALDEZ
CHECKED BY: ERIC SOUZA
REVISED BY / DATE REVISED

LAST REVISION 05/03/10 DATE PLOTTED => 25-AUG-2010 TIME PLOTTED => 10:04

Dist	COUNTY	ROUTE	POST MILES TOTAL PROJECT	SHEET No.	TOTAL SHEETS
03	Yub	70	R7.0/13.6	5	113

REGISTERED CIVIL ENGINEER 7-26-10 DATE

7-26-10
PLANS APPROVAL DATE

REGISTERED PROFESSIONAL ENGINEER
ERIC NORMAN SOUZA
No. 75706
Exp. 06-30-12
CIVIL
STATE OF CALIFORNIA

THE STATE OF CALIFORNIA OR ITS OFFICERS OR AGENTS SHALL NOT BE RESPONSIBLE FOR THE ACCURACY OR COMPLETENESS OF SCANNED COPIES OF THIS PLAN SHEET.

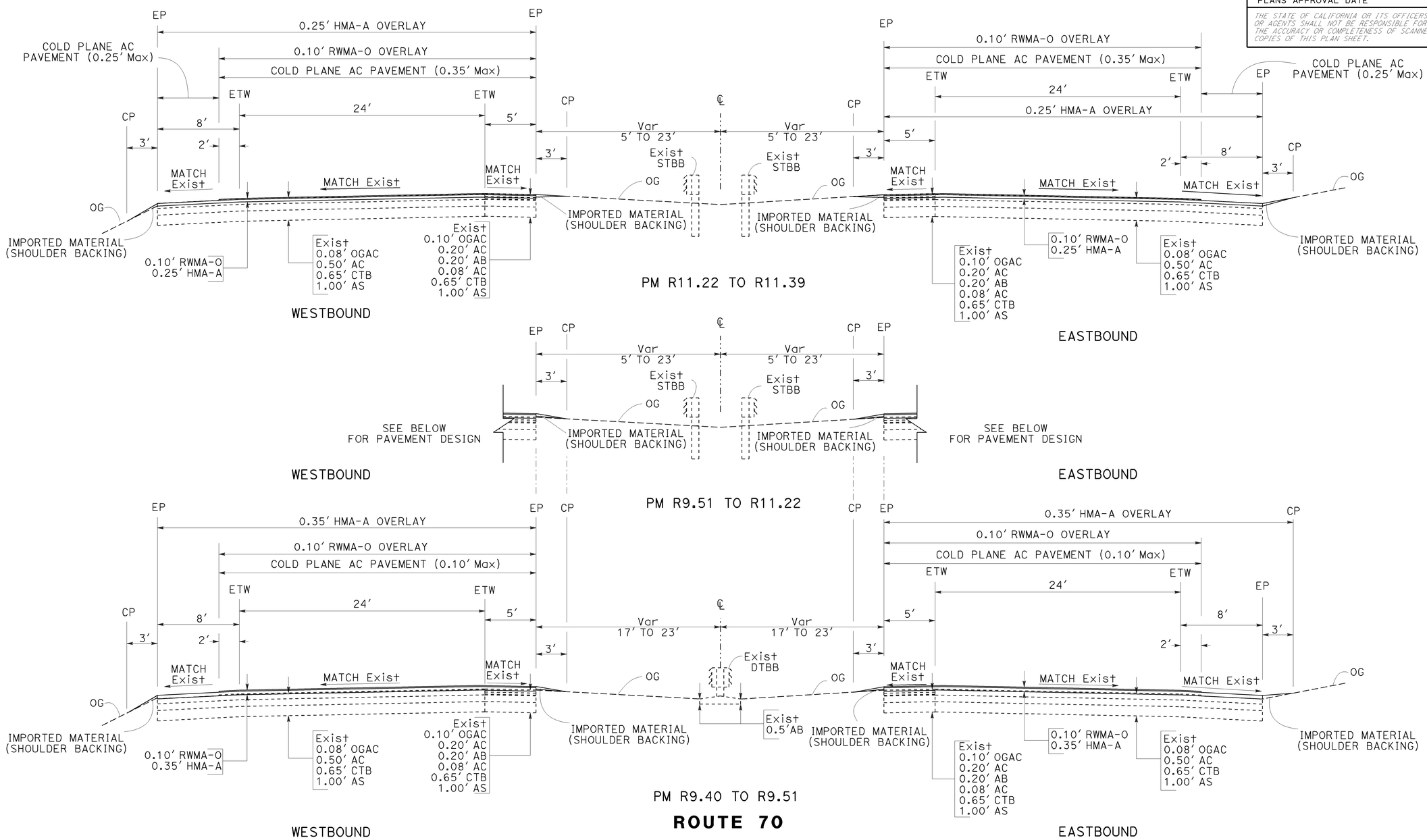

TYPICAL CROSS SECTIONS

NO SCALE

X-4

STATE OF CALIFORNIA - DEPARTMENT OF TRANSPORTATION
Caltrans® PROJECT DEVELOPMENT

FUNCTIONAL SUPERVISOR: KEVIN ESPINOZA
CALCULATED-DESIGNED BY: JOSE L. VALDEZ
CHECKED BY: ERIC SOUZA
REVISED BY
DATE REVISED

LAST REVISION 05/03/10 | DATE PLOTTED => 25-AUG-2010 | TIME PLOTTED => 10:04

Dist	COUNTY	ROUTE	POST MILES TOTAL PROJECT	SHEET No.	TOTAL SHEETS
03	Yub	70	R7.0/13.6	6	113

REGISTERED CIVIL ENGINEER 7-26-10 DATE

7-26-10
PLANS APPROVAL DATE

REGISTERED PROFESSIONAL ENGINEER ERIC NORMAN SOUZA No. 75706 Exp. 06-30-12 CIVIL STATE OF CALIFORNIA

THE STATE OF CALIFORNIA OR ITS OFFICERS OR AGENTS SHALL NOT BE RESPONSIBLE FOR THE ACCURACY OR COMPLETENESS OF SCANNED COPIES OF THIS PLAN SHEET.

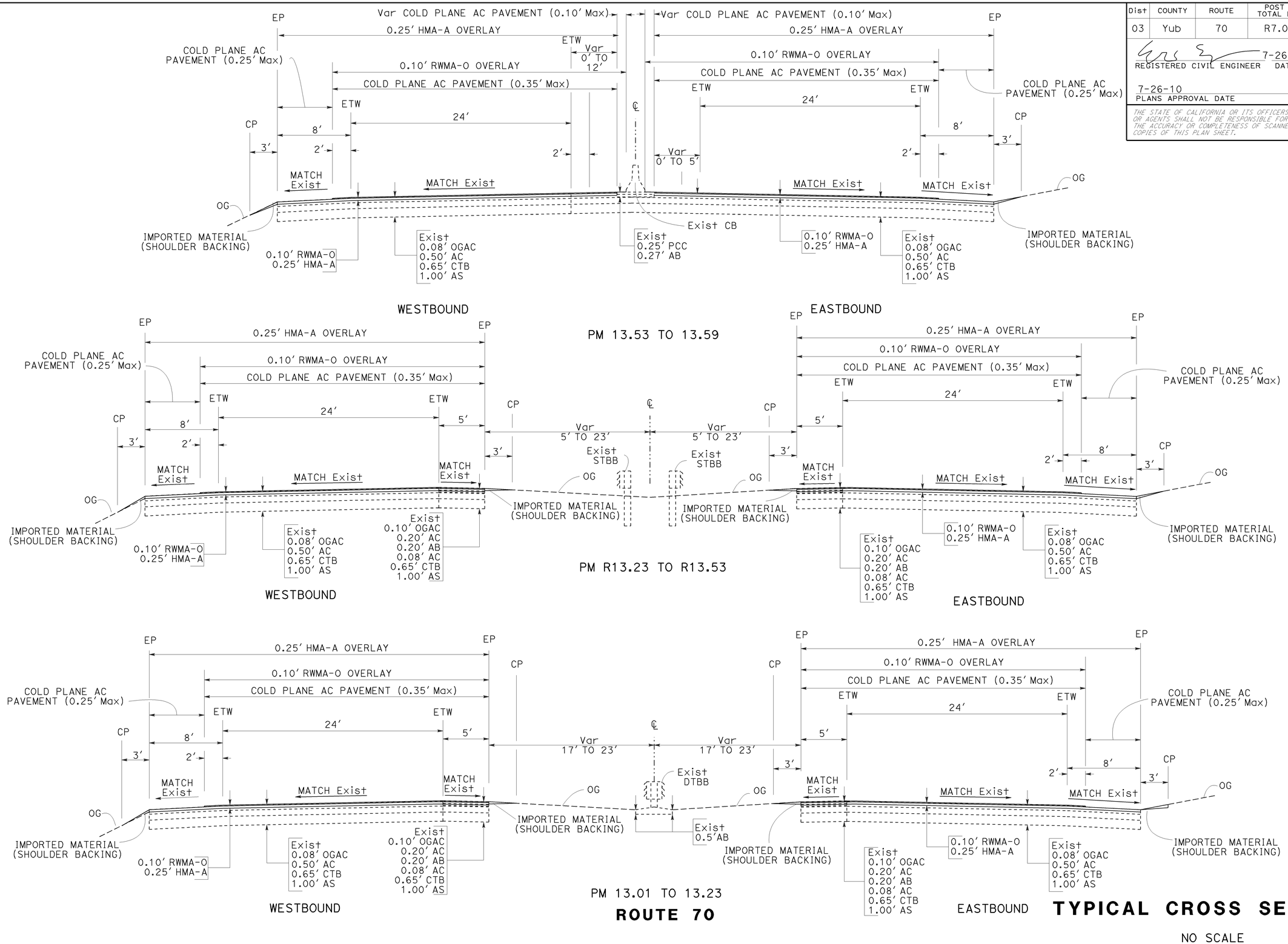

ROUTE 70

TYPICAL CROSS SECTIONS

NO SCALE

X-5

STATE OF CALIFORNIA - DEPARTMENT OF TRANSPORTATION
Caltrans® PROJECT DEVELOPMENT

FUNCTIONAL SUPERVISOR: KEVIN ESPINOZA
CALCULATED-DESIGNED BY: JOSE L. VALDEZ
CHECKED BY: ERIC SOUZA
REVISED BY
DATE REVISED

LAST REVISION 05/03/10 DATE PLOTTED => 25-AUG-2010 TIME PLOTTED => 10:04

Dist	COUNTY	ROUTE	POST MILES TOTAL PROJECT	SHEET No.	TOTAL SHEETS
03	Yub	70	R7.0/13.6	7	113

REGISTERED CIVIL ENGINEER 7-26-10 DATE

7-26-10
PLANS APPROVAL DATE

REGISTERED PROFESSIONAL ENGINEER ERIC NORMAN SOUZA No. 75706 Exp. 06-30-12 CIVIL STATE OF CALIFORNIA

THE STATE OF CALIFORNIA OR ITS OFFICERS OR AGENTS SHALL NOT BE RESPONSIBLE FOR THE ACCURACY OR COMPLETENESS OF SCANNED COPIES OF THIS PLAN SHEET.

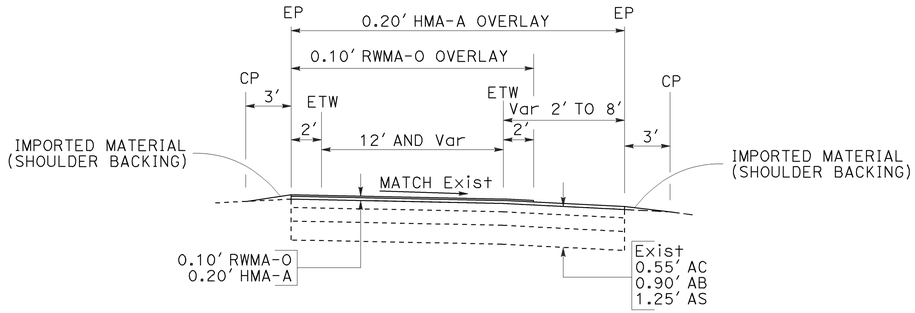

LINDHURST Ave ON/OFF RAMPS
ERLE ROAD ON/OFF RAMPS

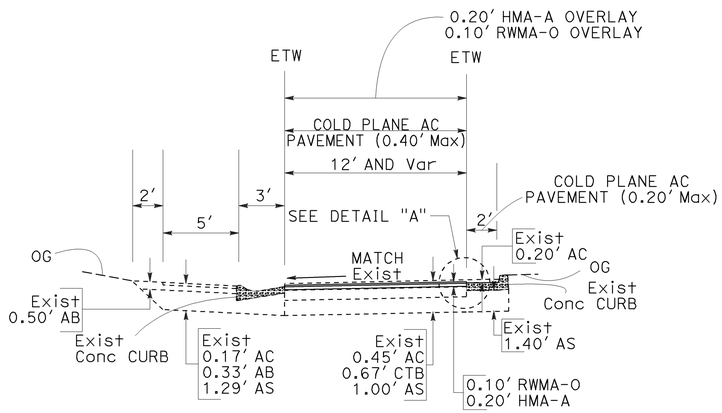

OLIVEHURST Ave WB ON/OFF RAMP
OLIVEHURST Ave EB OFF RAMP

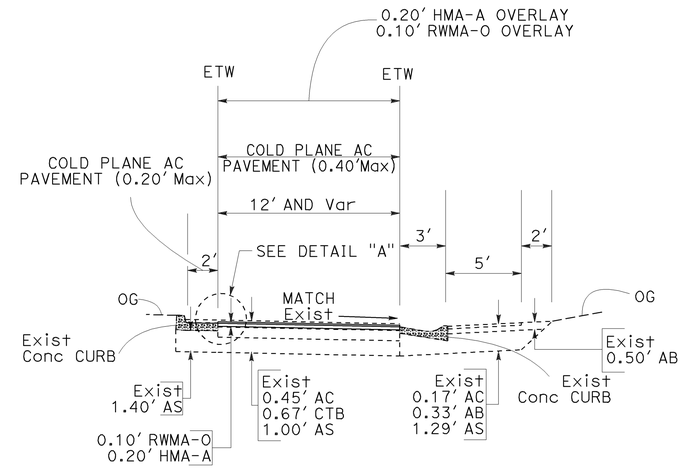

OLIVEHURST Ave EB ON RAMP

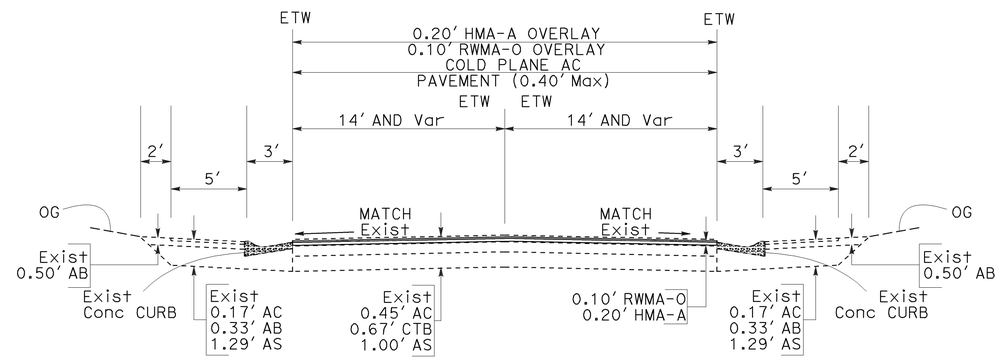

FEATHER RIVER Blvd EB ON/OFF RAMP
(TWO WAY)

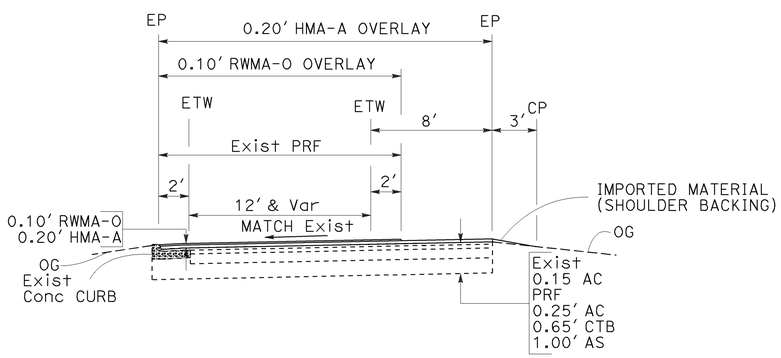

McGOWAN PARKWAY ON/OFF RAMPS

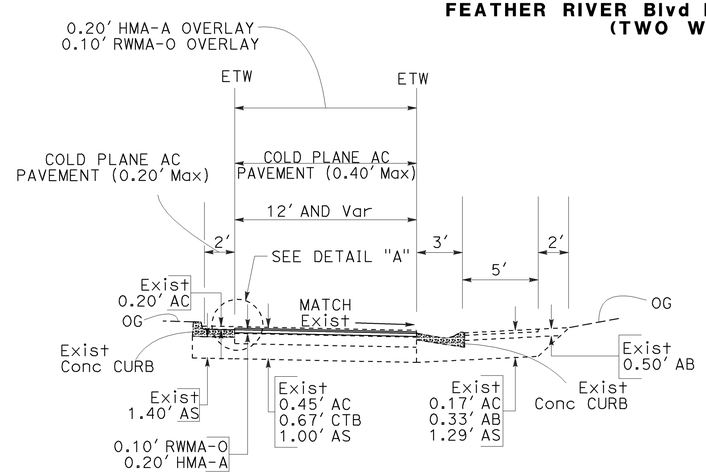

OLIVEHURST Ave EB ON RAMP
FEATHER RIVER Blvd EB ON/OFF RAMP
FEATHER RIVER Blvd WB ON/OFF RAMP

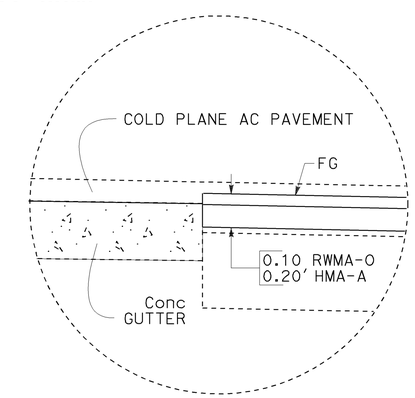

DETAIL "A"

TYPICAL CROSS SECTIONS

NO SCALE

X-6

STATE OF CALIFORNIA - DEPARTMENT OF TRANSPORTATION
PROJECT DEVELOPMENT
FUNCTIONAL SUPERVISOR: KEVIN ESPINOZA
CALCULATED-DESIGNED BY: JOSE L. VALDEZ
CHECKED BY: ERIC SOUZA
REVISED BY
DATE REVISED

LAST REVISION 05/20/10
DATE PLOTTED => 25-AUG-2010
TIME PLOTTED => 10:04

Dist	COUNTY	ROUTE	POST MILES TOTAL PROJECT	SHEET No.	TOTAL SHEETS
03	Yub	70	R7.0/13.6	8	113

REGISTERED CIVIL ENGINEER 7-26-10 DATE

7-26-10
PLANS APPROVAL DATE

REGISTERED PROFESSIONAL ENGINEER
ERIC NORMAN SOUZA
No. 75706
Exp. 06-30-12
CIVIL
STATE OF CALIFORNIA

THE STATE OF CALIFORNIA OR ITS OFFICERS OR AGENTS SHALL NOT BE RESPONSIBLE FOR THE ACCURACY OR COMPLETENESS OF SCANNED COPIES OF THIS PLAN SHEET.

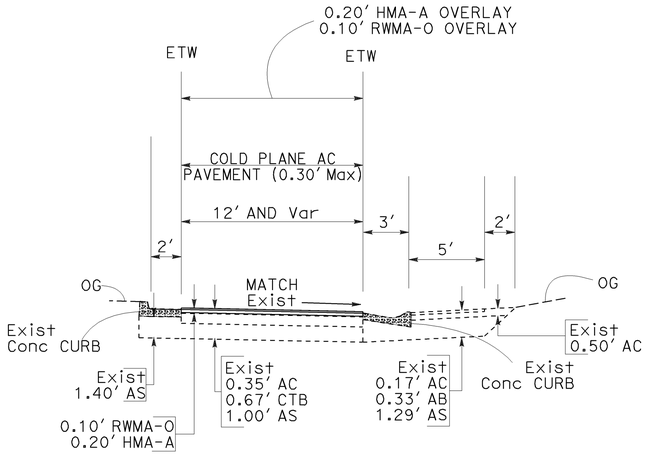

NORTH BEALE EB ON/OFF RAMP

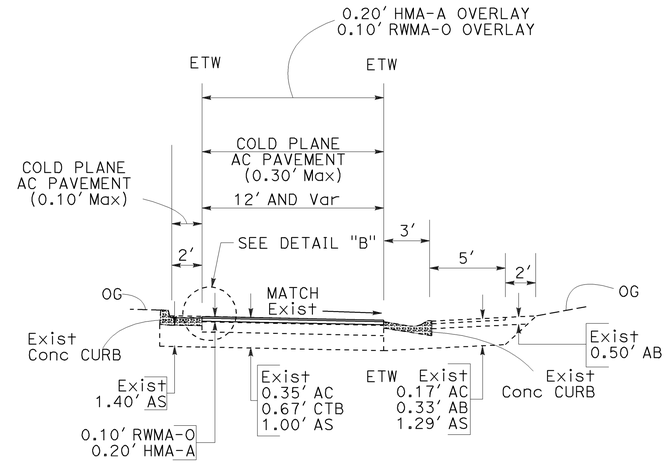

NORTH BEALE WB OFF RAMP
CASE 1

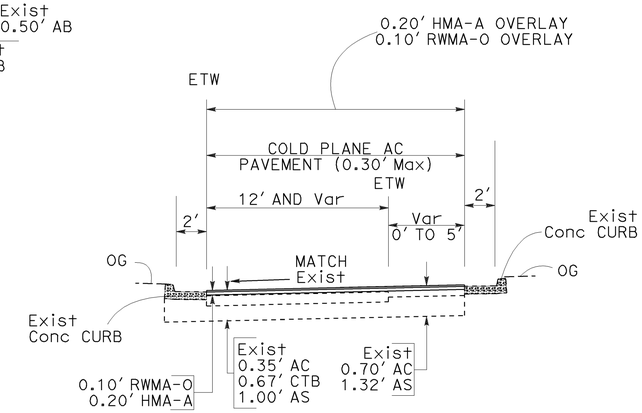

NORTH BEALE WB OFF RAMP
CASE 4

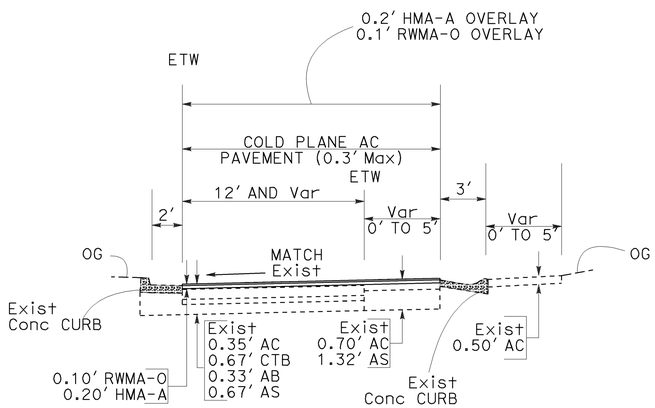

NORTH BEALE WB OFF RAMP
CASE 3

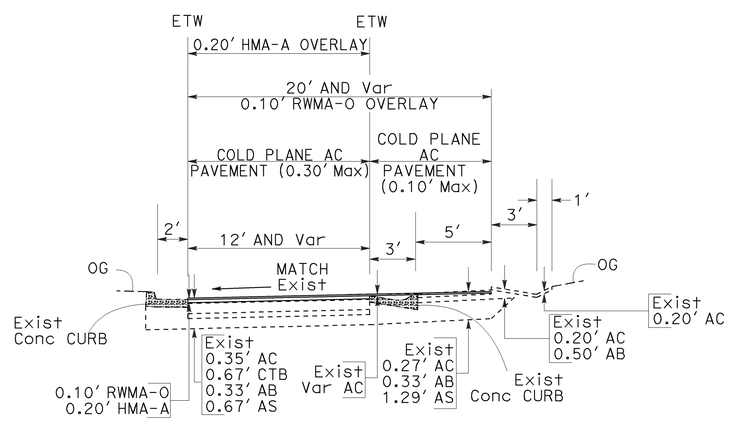

NORTH BEALE WB OFF RAMP
CASE 2

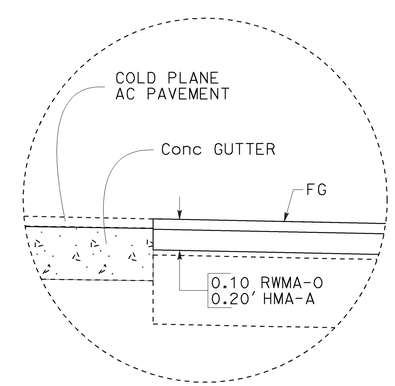

DETAIL "B"

TYPICAL CROSS SECTIONS

NO SCALE

X-7

STATE OF CALIFORNIA - DEPARTMENT OF TRANSPORTATION
Caltrans® PROJECT DEVELOPMENT

FUNCTIONAL SUPERVISOR: KEVIN ESPINOZA
CALCULATED-DESIGNED BY: JOSE L. VALDEZ
CHECKED BY: ERIC SOUZA
REVISED BY
DATE REVISED

LAST REVISION 05/20/10
DATE PLOTTED => 25-AUG-2010
TIME PLOTTED => 10:04

Dist	COUNTY	ROUTE	POST MILES TOTAL PROJECT	SHEET No.	TOTAL SHEETS
03	Yub	70	R7.0/13.6	9	113

REGISTERED CIVIL ENGINEER 7-26-10 DATE

7-26-10
PLANS APPROVAL DATE

REGISTERED PROFESSIONAL ENGINEER
ERIC NORMAN SOUZA
No. 75706
Exp. 06-30-12
CIVIL
STATE OF CALIFORNIA

THE STATE OF CALIFORNIA OR ITS OFFICERS OR AGENTS SHALL NOT BE RESPONSIBLE FOR THE ACCURACY OR COMPLETENESS OF SCANNED COPIES OF THIS PLAN SHEET.

NOTES:

1. FOR ACCURATE RIGHT OF WAY DATA, CONTACT RIGHT OF WAY ENGINEERING AT THE DISTRICT OFFICE.
2. CONFORM LOCATION FOR PLACING HMA-A AND RWMA-O OVERLAYS IS THE SAME UNLESS OTHERWISE SHOWN OR NOTED.
3. CONFORM LOCATIONS AS SHOWN OR AS DIRECTED BY THE ENGINEER.

LEGEND

CONFORM LOCATION FOR HMA-A

ABBREVIATIONS

HMA-A - HOT MIX ASPHALT (TYPE A)

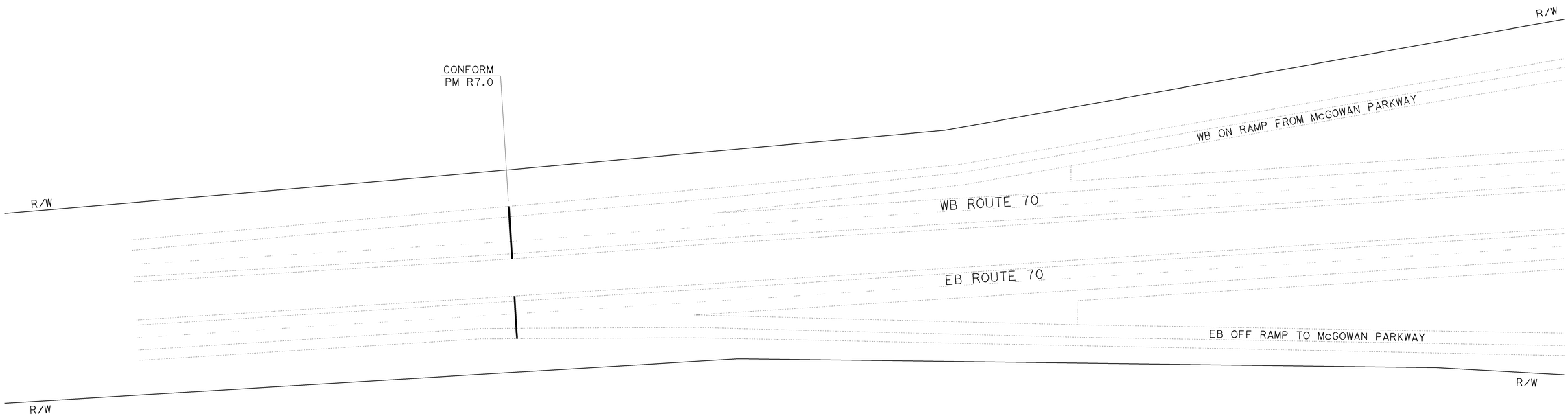

CONSTRUCTION DETAILS

SCALE: 1" = 50'

C-1

STATE OF CALIFORNIA - DEPARTMENT OF TRANSPORTATION
Caltrans PROJECT DEVELOPMENT

FUNCTIONAL SUPERVISOR: KEVIN ESPINOZA
CALCULATED-DESIGNED BY: JOSE L. VALDEZ
CHECKED BY: ERIC SOUZA
REVISED BY
DATE REVISED

LAST REVISION DATE PLOTTED => 25-AUG-2010
05/03/10 TIME PLOTTED => 10:04

Dist	COUNTY	ROUTE	POST MILES TOTAL PROJECT	SHEET No.	TOTAL SHEETS
03	Yub	70	R7.0/13.6	10	113

REGISTERED CIVIL ENGINEER 7-26-10 DATE

7-26-10
PLANS APPROVAL DATE

REGISTERED PROFESSIONAL ENGINEER
ERIC NORMAN SOUZA
No. 75706
Exp. 06-30-12
CIVIL
STATE OF CALIFORNIA

THE STATE OF CALIFORNIA OR ITS OFFICERS OR AGENTS SHALL NOT BE RESPONSIBLE FOR THE ACCURACY OR COMPLETENESS OF SCANNED COPIES OF THIS PLAN SHEET.

NOTES:

1. FOR ACCURATE RIGHT OF WAY DATA, CONTACT RIGHT OF WAY ENGINEERING AT THE DISTRICT OFFICE.
2. CONFORM LOCATION FOR PLACING HMA-A AND RWMA-O OVERLAYS IS THE SAME UNLESS OTHERWISE SHOWN OR NOTED.
3. CONFORM LOCATIONS AS SHOWN OR AS DIRECTED BY THE ENGINEER.

LEGEND

—— CONFORM LOCATION FOR HMA-A
- - - CONFORM LOCATION FOR RWMA-O

ABBREVIATIONS

HMA-A - HOT MIX ASPHALT (TYPE A)
RWMA-O - RUBBERIZED WARM MIX ASPHALT (OPEN GRADED)
CP - CATCH POINT

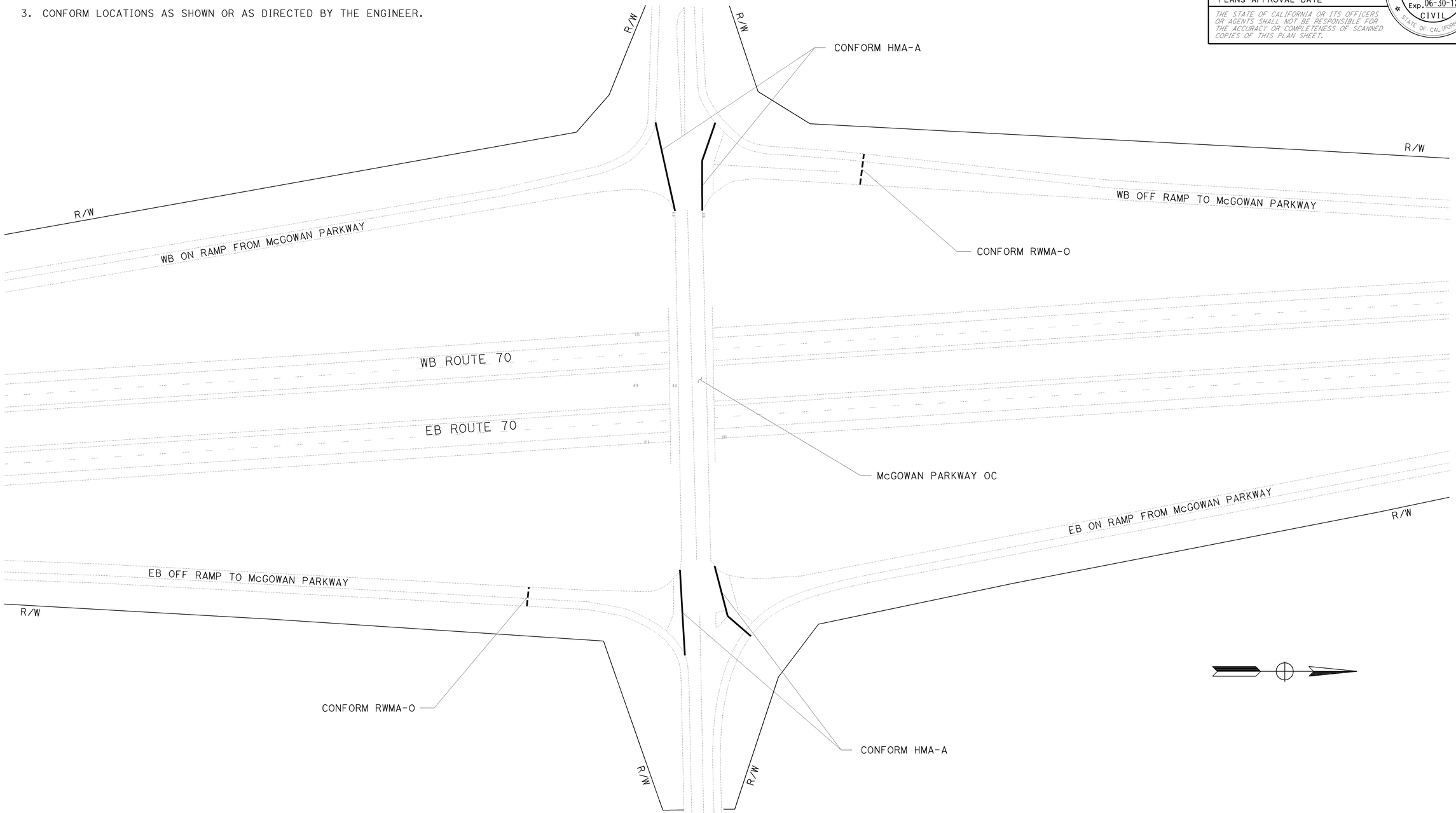

CONSTRUCTION DETAILS

SCALE: 1" = 50'

C-2

STATE OF CALIFORNIA - DEPARTMENT OF TRANSPORTATION
Caltrans
PROJECT DEVELOPMENT

FUNCTIONAL SUPERVISOR: KEVIN ESPINOZA
CALCULATED-DESIGNED BY: JOSE L. VALDEZ
CHECKED BY: ERIC SOUZA
REVISED BY
DATE REVISED

LAST REVISION 05/19/10
DATE PLOTTED => 25-AUG-2010
TIME PLOTTED => 10:04

Dist	COUNTY	ROUTE	POST MILES TOTAL PROJECT	SHEET No.	TOTAL SHEETS
03	Yub	70	R7.0/13.6	11	113

REGISTERED CIVIL ENGINEER 7-26-10 DATE

7-26-10
PLANS APPROVAL DATE

REGISTERED PROFESSIONAL ENGINEER
ERIC NORMAN SOUZA
No. 75706
Exp. 06-30-12
CIVIL
STATE OF CALIFORNIA

THE STATE OF CALIFORNIA OR ITS OFFICERS OR AGENTS SHALL NOT BE RESPONSIBLE FOR THE ACCURACY OR COMPLETENESS OF SCANNED COPIES OF THIS PLAN SHEET.

NOTES:

1. FOR ACCURATE RIGHT OF WAY DATA, CONTACT RIGHT OF WAY ENGINEERING AT THE DISTRICT OFFICE.
2. CONFORM LOCATION FOR PLACING HMA-A AND RWMA-O OVERLAYS IS THE SAME UNLESS OTHERWISE SHOWN OR NOTED.
3. CONFORM LOCATIONS AS SHOWN OR AS DIRECTED BY THE ENGINEER.
4. FOR CONFORM TAPER DETAILS TO STRUCTURES, SEE CONSTRUCTION DETAILS SHEET C-14.
5. CONFORM HMA-A AT END OF BRIDGE No. 0042L SB ROUTE 65. DO NOT PLACE HMA-A ON BRIDGE No. 0042L.

LEGEND

CONFORM LOCATION FOR HMA-A

ABBREVIATIONS

HMA-A - HOT MIX ASPHALT (TYPE A)

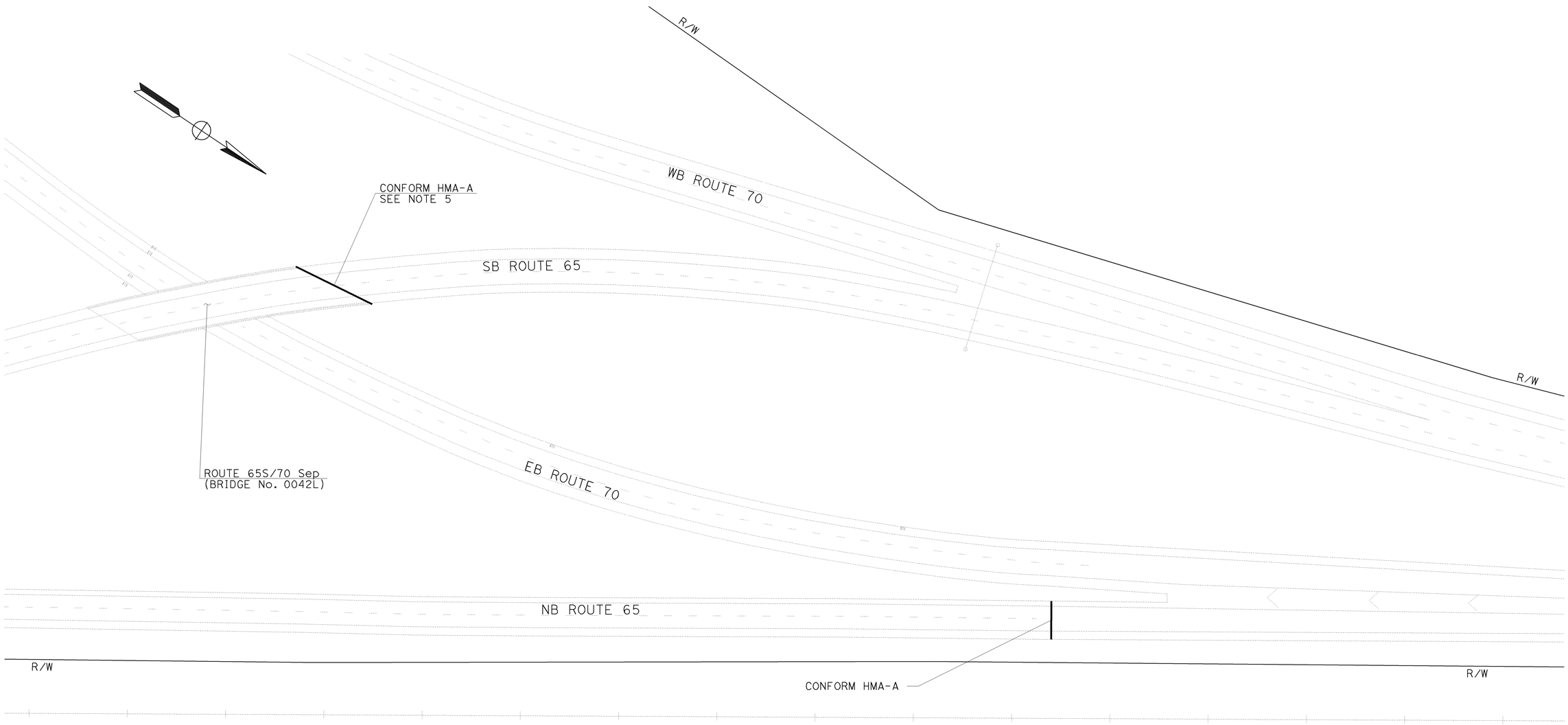

CONSTRUCTION DETAILS

SCALE: 1" = 50'

C-3

STATE OF CALIFORNIA - DEPARTMENT OF TRANSPORTATION
Caltrans PROJECT DEVELOPMENT

FUNCTIONAL SUPERVISOR: KEVIN ESPINOZA
CALCULATED-DESIGNED BY: ERIC SOUZA
CHECKED BY: JOSE L. VALDEZ
REVISED BY
DATE REVISED

LAST REVISION 05/03/10
DATE PLOTTED => 25-AUG-2010
TIME PLOTTED => 10:04

Dist	COUNTY	ROUTE	POST MILES TOTAL PROJECT	SHEET No.	TOTAL SHEETS
03	Yub	70	R7.0/13.6	12	113

REGISTERED CIVIL ENGINEER 7-26-10 DATE

7-26-10
PLANS APPROVAL DATE

REGISTERED PROFESSIONAL ENGINEER
ERIC NORMAN SOUZA
No. 75706
Exp. 06-30-12
CIVIL
STATE OF CALIFORNIA

THE STATE OF CALIFORNIA OR ITS OFFICERS OR AGENTS SHALL NOT BE RESPONSIBLE FOR THE ACCURACY OR COMPLETENESS OF SCANNED COPIES OF THIS PLAN SHEET.

NOTES:

1. FOR ACCURATE RIGHT OF WAY DATA, CONTACT RIGHT OF WAY ENGINEERING AT THE DISTRICT OFFICE.
2. FOR ALL GUARD RAIL LOCATIONS SEE QUANTITY SHEETS.

ABBREVIATIONS

EAA - END ANCHOR ASSEMBLY
TR - TRANSITION RAILING
ATS (IN-LINE) - ALTERNATIVE IN-LINE TERMINAL SYSTEM
ATS (FLARED) - ALTERNATIVE FLARED TERMINAL SYSTEM

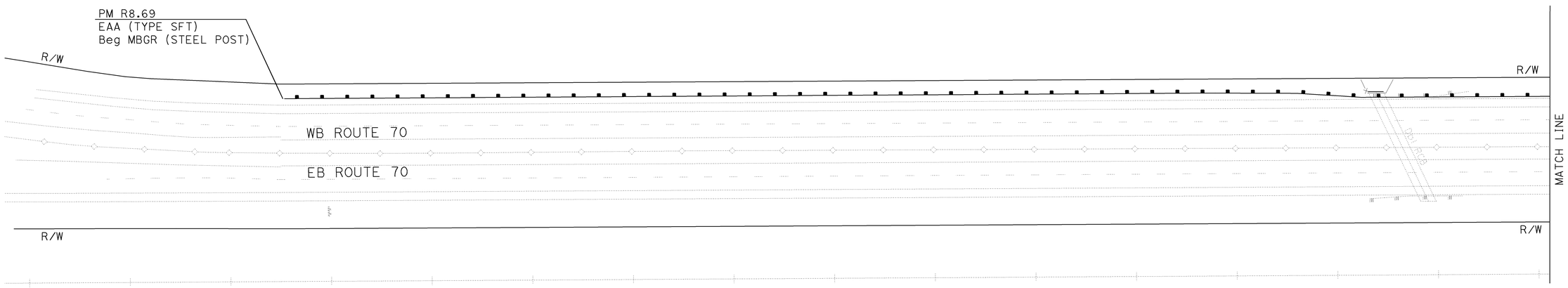

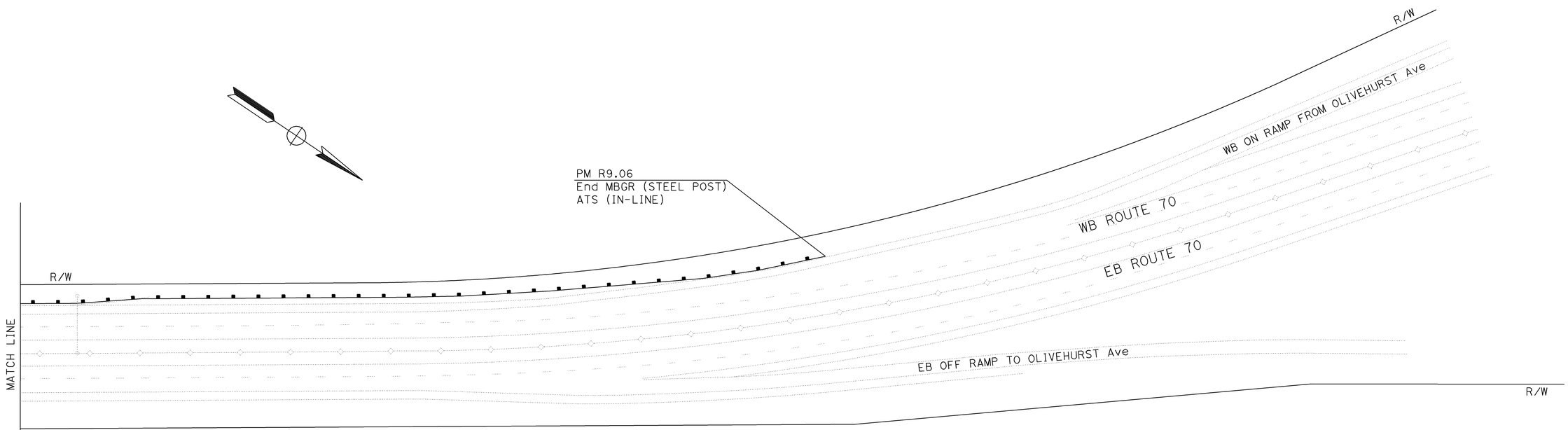

CONSTRUCTION DETAILS

SCALE: 1" = 50'

C-4

STATE OF CALIFORNIA - DEPARTMENT OF TRANSPORTATION
PROJECT DEVELOPMENT

FUNCTIONAL SUPERVISOR: KEVIN ESPINOZA
CALCULATED-DESIGNED BY: JOSE L. VALDEZ
CHECKED BY: ERIC SOUZA
REVISED BY
DATE REVISED

LAST REVISION 05/03/10
DATE PLOTTED => 25-AUG-2010
TIME PLOTTED => 10:04

Dist	COUNTY	ROUTE	POST MILES TOTAL PROJECT	SHEET No.	TOTAL SHEETS
03	Yub	70	R7.0/13.6	13	113

REGISTERED CIVIL ENGINEER 7-26-10 DATE

7-26-10
PLANS APPROVAL DATE

REGISTERED PROFESSIONAL ENGINEER
ERIC NORMAN SOUZA
No. 75706
Exp. 06-30-12
CIVIL
STATE OF CALIFORNIA

THE STATE OF CALIFORNIA OR ITS OFFICERS OR AGENTS SHALL NOT BE RESPONSIBLE FOR THE ACCURACY OR COMPLETENESS OF SCANNED COPIES OF THIS PLAN SHEET.

NOTES:

1. FOR ACCURATE RIGHT OF WAY DATA, CONTACT RIGHT OF WAY ENGINEERING AT THE DISTRICT OFFICE.
2. CONFORM LOCATION FOR PLACING HMA-A AND RWMA-O OVERLAYS IS THE SAME UNLESS OTHERWISE SHOWN OR NOTED.
3. CONFORM LOCATIONS AS SHOWN OR AS DIRECTED BY THE ENGINEER.

LEGEND

—— CONFORM LOCATION FOR HMA-A
- - - CONFORM LOCATION FOR RWMA-O

ABBREVIATIONS

HMA-A - HOT MIX ASPHALT (TYPE A)
RWMA-O - RUBBERIZED WARM MIX ASPHALT (OPEN GRADED)

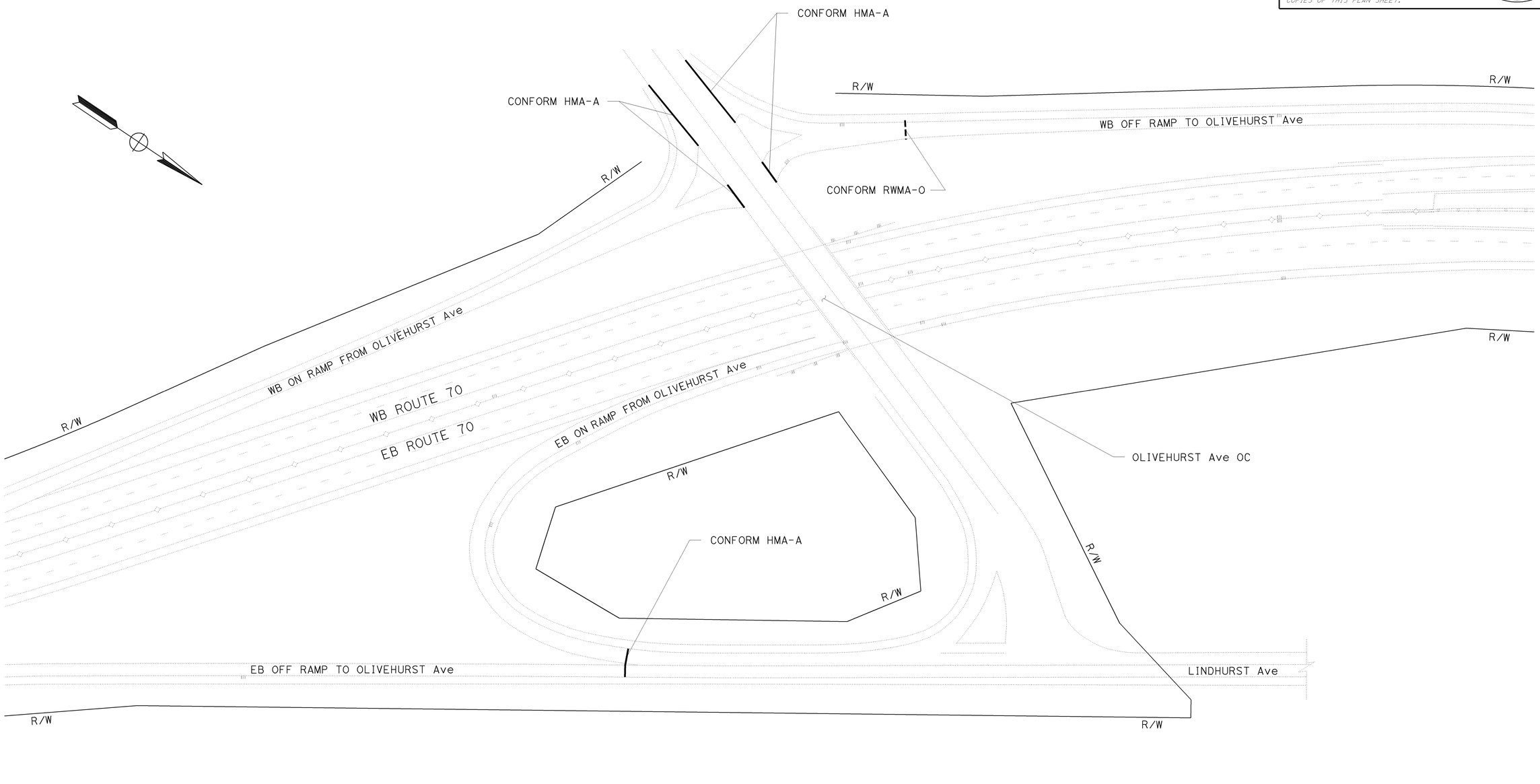

CONSTRUCTION DETAILS

SCALE: 1" = 50'

C-5

STATE OF CALIFORNIA - DEPARTMENT OF TRANSPORTATION
Caltrans® PROJECT DEVELOPMENT

FUNCTIONAL SUPERVISOR: KEVIN ESPINOZA
CALCULATED-DESIGNED BY: JOSE L. VALDEZ
CHECKED BY: ERIC SOUZA
REVISED BY
DATE REVISED

LAST REVISION 05/18/10
DATE PLOTTED => 25-AUG-2010
TIME PLOTTED => 10:04

Dist	COUNTY	ROUTE	POST MILES TOTAL PROJECT	SHEET No.	TOTAL SHEETS
03	Yub	70	R7.0/13.6	14	113

REGISTERED CIVIL ENGINEER 7-26-10 DATE

7-26-10
PLANS APPROVAL DATE

REGISTERED PROFESSIONAL ENGINEER
ERIC NORMAN SOUZA
No. 75706
Exp. 06-30-12
CIVIL
STATE OF CALIFORNIA

THE STATE OF CALIFORNIA OR ITS OFFICERS OR AGENTS SHALL NOT BE RESPONSIBLE FOR THE ACCURACY OR COMPLETENESS OF SCANNED COPIES OF THIS PLAN SHEET.

NOTES:

1. FOR ACCURATE RIGHT OF WAY DATA, CONTACT RIGHT OF WAY ENGINEERING AT THE DISTRICT OFFICE.
2. FOR ALL GUARDRAIL LOCATIONS SEE QUANTITY SHEETS.

ABBREVIATIONS

EAA - END ANCHOR ASSEMBLY
TR - TRANSITION RAILING
ATS (IN-LINE) - ALTERNATIVE IN-LINE
ATS (FLARED) - ALTERNATIVE FLARED TERMINAL SYSTEM
(N) - NOT A SEPARATE PAY ITEM, FOR INFORMATION ONLY

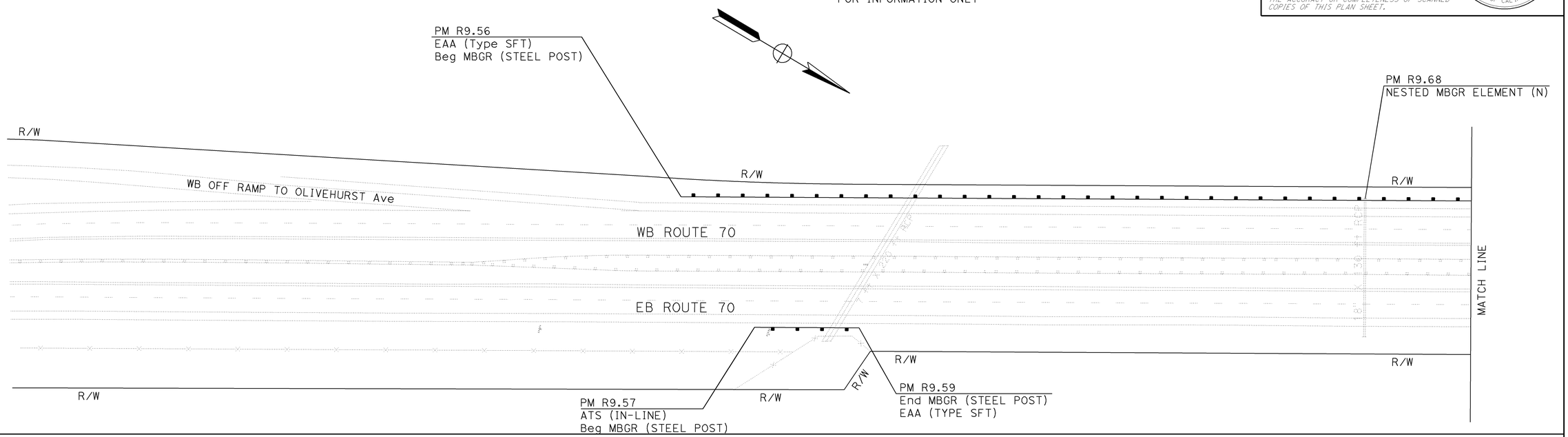

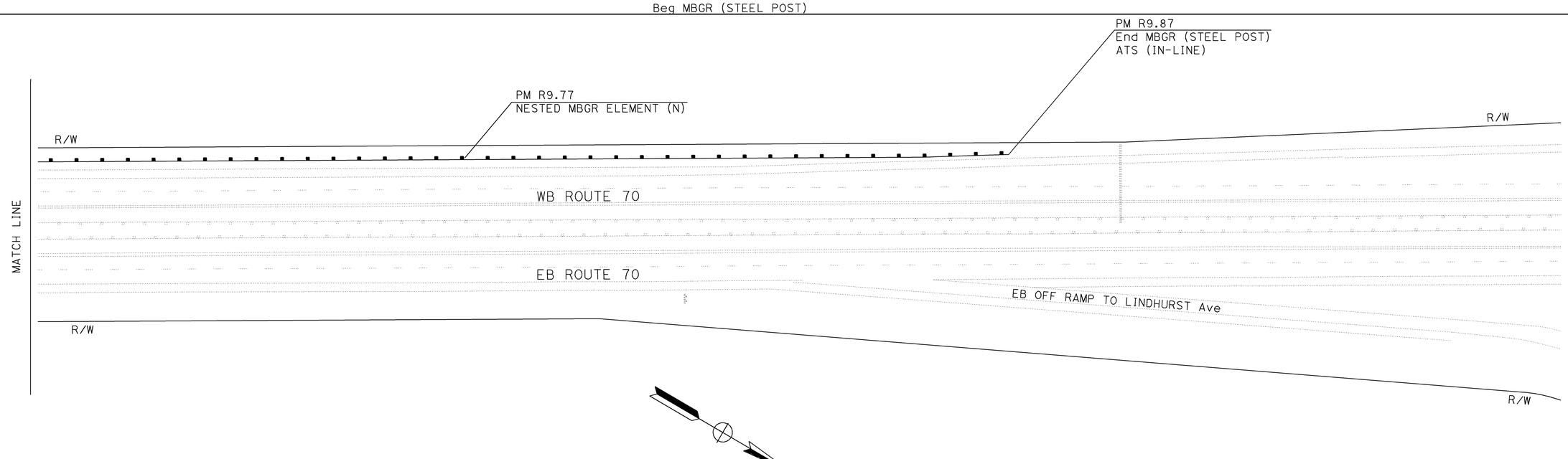

CONSTRUCTION DETAILS

SCALE: 1" = 50'

C-6

REVISED BY | DATE REVISED
JOSE L. VALDEZ | ERIC SOUZA
CALCULATED-DESIGNED BY | CHECKED BY
FUNCTIONAL SUPERVISOR
KEVIN ESPINOZA

STATE OF CALIFORNIA - DEPARTMENT OF TRANSPORTATION
Caltrans
PROJECT DEVELOPMENT

LAST REVISION 05/03/10 | DATE PLOTTED => 25-AUG-2010 | TIME PLOTTED => 10:04

Dist	COUNTY	ROUTE	POST MILES TOTAL PROJECT	SHEET No.	TOTAL SHEETS
03	Yub	70	R7.0/13.6	15	113

REGISTERED CIVIL ENGINEER 7-26-10 DATE

7-26-10
PLANS APPROVAL DATE

REGISTERED PROFESSIONAL ENGINEER
ERIC NORMAN SOUZA
No. 75706
Exp. 06-30-12
CIVIL
STATE OF CALIFORNIA

THE STATE OF CALIFORNIA OR ITS OFFICERS OR AGENTS SHALL NOT BE RESPONSIBLE FOR THE ACCURACY OR COMPLETENESS OF SCANNED COPIES OF THIS PLAN SHEET.

NOTES:

1. FOR ACCURATE RIGHT OF WAY DATA, CONTACT RIGHT OF WAY ENGINEERING AT THE DISTRICT OFFICE.
2. CONFORM LOCATION FOR PLACING HMA-A AND RWMA-O OVERLAYS IS THE SAME UNLESS OTHERWISE SHOWN OR NOTED.
3. CONFORM LOCATIONS AS SHOWN OR AS DIRECTED BY THE ENGINEER.

LEGEND

—— CONFORM LOCATION FOR HMA-A
--- CONFORM LOCATION FOR RWMA-O

ABBREVIATIONS

HMA-A - HOT MIX ASPHALT (TYPE A)
RWMA-O - RUBBERIZED WARM MIX ASPHALT (OPEN GRADED)

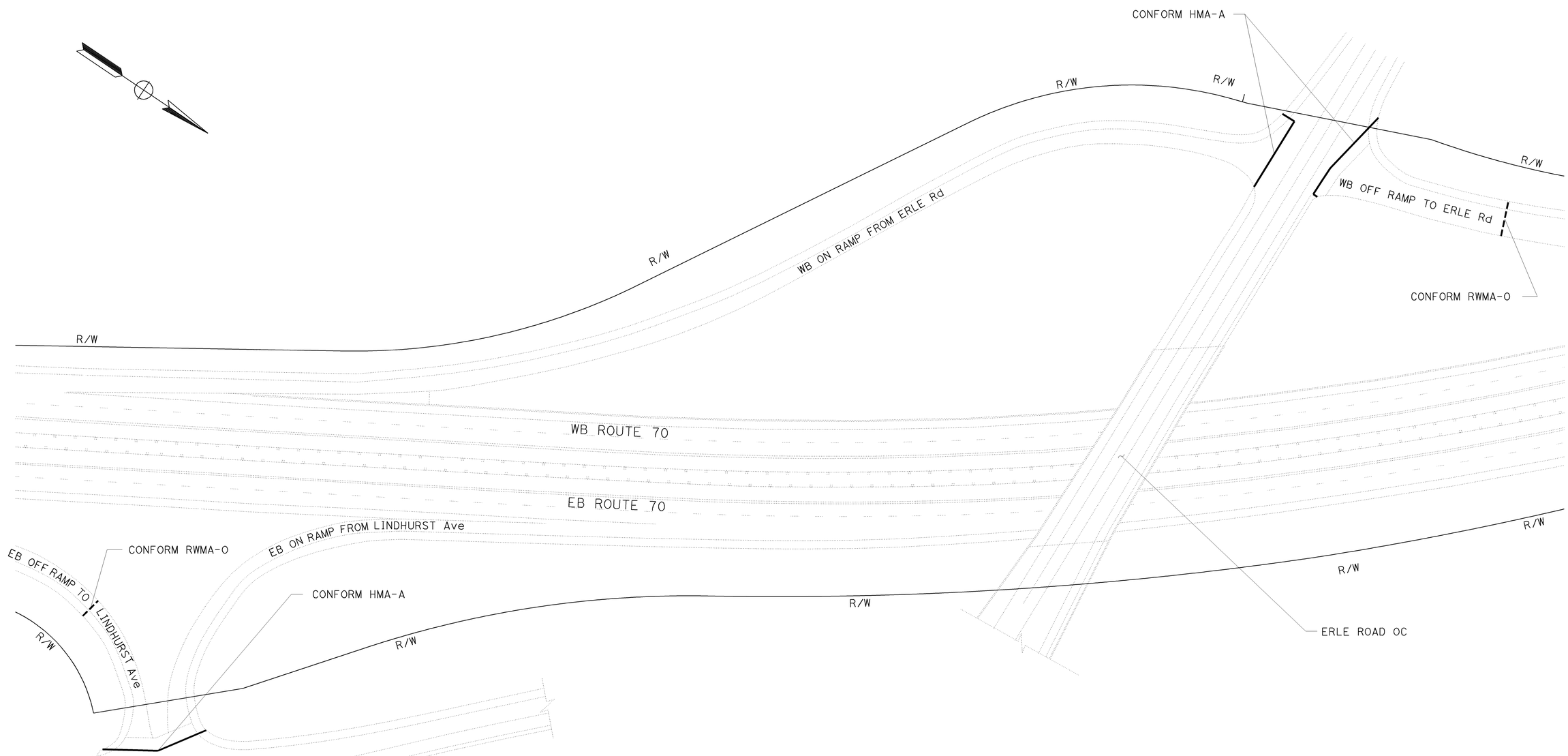

CONSTRUCTION DETAILS

SCALE: 1" = 50'

C-7

STATE OF CALIFORNIA - DEPARTMENT OF TRANSPORTATION
Caltrans®
PROJECT DEVELOPMENT

FUNCTIONAL SUPERVISOR: KEVIN ESPINOZA
CALCULATED-DESIGNED BY: JOSE L. VALDEZ
CHECKED BY: ERIC SOUZA
REVISED BY
DATE REVISED

LAST REVISION 05/18/10
DATE PLOTTED => 25-AUG-2010
TIME PLOTTED => 10:04

Dist	COUNTY	ROUTE	POST MILES TOTAL PROJECT	SHEET No.	TOTAL SHEETS
03	Yub	70	R7.0/13.6	16	113

REGISTERED CIVIL ENGINEER 7-26-10 DATE

7-26-10
PLANS APPROVAL DATE

REGISTERED PROFESSIONAL ENGINEER
ERIC NORMAN SOUZA
No. 75706
Exp. 06-30-12
CIVIL
STATE OF CALIFORNIA

THE STATE OF CALIFORNIA OR ITS OFFICERS OR AGENTS SHALL NOT BE RESPONSIBLE FOR THE ACCURACY OR COMPLETENESS OF SCANNED COPIES OF THIS PLAN SHEET.

NOTES:

1. FOR ACCURATE RIGHT OF WAY DATA, CONTACT RIGHT OF WAY ENGINEERING AT THE DISTRICT OFFICE.
2. FOR ALL GUARDRAIL LOCATIONS SEE QUANTITY SHEETS.
3. EXACT LOCATION OF TEMPORARY FENCE (TYPE ESA) TO BE DETERMINED IN THE FIELD BY THE ENGINEER.

LEGEND

CONSTRUCTION STAGING AREA

REMOVE BASE AND SURFACING

TFESA — TEMPORARY FENCE (TYPE ESA)

ABBREVIATIONS

EAA - END ANCHOR ASSEMBLY
TR - TRANSITION RAILING
ATS (IN-LINE) - ALTERNATIVE IN-LINE TERMINAL SYSTEM
ATS (FLARED) - ALTERNATIVE FLARED TERMINAL SYSTEM

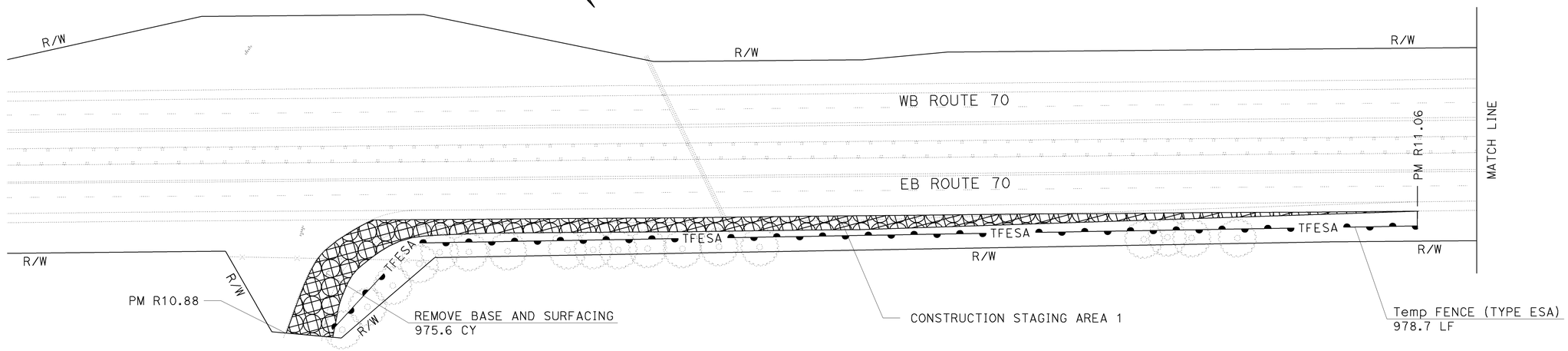

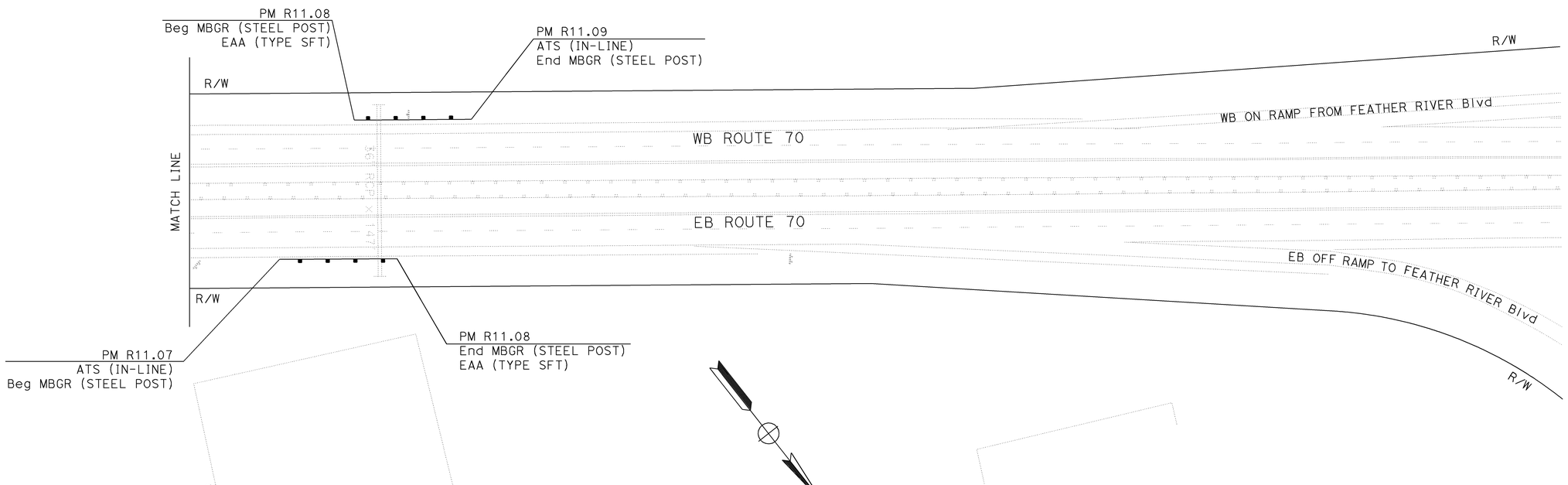

CONSTRUCTION DETAILS

SCALE: 1" = 50'

C-8

STATE OF CALIFORNIA - DEPARTMENT OF TRANSPORTATION
Caltrans PROJECT DEVELOPMENT

FUNCTIONAL SUPERVISOR: KEVIN ESPINOZA
CALCULATED-DESIGNED BY: JOSE L. VALDEZ
CHECKED BY: ERIC SOUZA
REVISED BY
DATE REVISED

LAST REVISION DATE PLOTTED => 25-AUG-2010
05/03/10 TIME PLOTTED => 10:04

Dist	COUNTY	ROUTE	POST MILES TOTAL PROJECT	SHEET No.	TOTAL SHEETS
03	Yub	70	R7.0/13.6	17	113

REGISTERED CIVIL ENGINEER 7-26-10 DATE

7-26-10
PLANS APPROVAL DATE

REGISTERED PROFESSIONAL ENGINEER ERIC NORMAN SOUZA No. 75706 Exp. 06-30-12 CIVIL STATE OF CALIFORNIA

THE STATE OF CALIFORNIA OR ITS OFFICERS OR AGENTS SHALL NOT BE RESPONSIBLE FOR THE ACCURACY OR COMPLETENESS OF SCANNED COPIES OF THIS PLAN SHEET.

NOTES:

1. FOR ACCURATE RIGHT OF WAY DATA, CONTACT RIGHT OF WAY ENGINEERING AT THE DISTRICT OFFICE.
2. CONFORM LOCATION FOR PLACING HMA-A AND RWMA-O OVERLAYS IS THE SAME UNLESS OTHERWISE SHOWN OR NOTED. DO NOT PAVE ACROSS FEATHER RIVER BOULEVARD UNDERCROSSING.
3. CONFORM LOCATIONS AS SHOWN OR AS DIRECTED BY THE ENGINEER.
4. EXACT LOCATION OF TEMPORARY FENCE (TYPE ESA) TO BE DETERMINED IN THE FIELD BY THE ENGINEER.
5. FOR ALL GUARDRAIL LOCATIONS SEE QUANTITY SHEETS.
6. FOR ALL COLD PLANE AC PAVEMENT LIMITS, SEE TYPICAL CROSS SECTIONS.

LEGEND

- CONFORM LOCATION FOR HMA-A
- CONFORM LOCATION FOR RWMA-O
- CONSTRUCTION STAGING AREA
- TFESA — TEMPORARY FENCE (TYPE ESA)
- MAINLINE LIMITS OF 0.35' COLD PLANE AC Pvmnt SOUTH OF FEATHER RIVER Blvd UC

ABBREVIATIONS

HMA-A - HOT MIX ASPHALT (TYPE A)
RWMA-O - RUBBERIZED WARM MIX ASPHALT (OPEN GRADED)
EAA - END ANCHOR ASSEMBLY
TR - TRANSITION RAILING
ATS (IN-LINE) - ALTERNATIVE IN-LINE TERMINAL SYSTEM
ATS (FLARED) - ALTERNATIVE FLARED TERMINAL SYSTEM

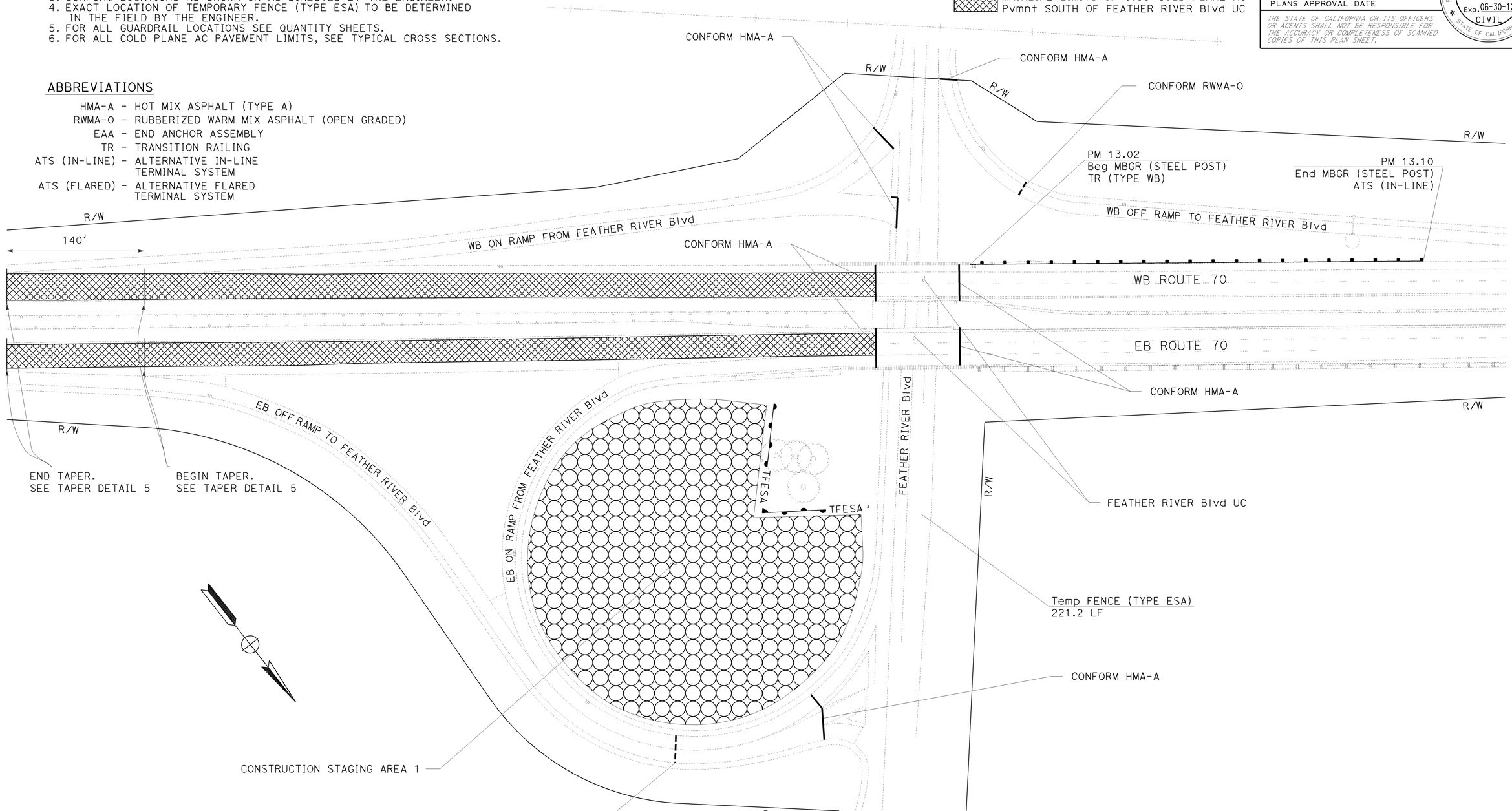

CONSTRUCTION DETAILS

SCALE: 1" = 50'

C-9

STATE OF CALIFORNIA - DEPARTMENT OF TRANSPORTATION
Caltrans PROJECT DEVELOPMENT

FUNCTIONAL SUPERVISOR: KEVIN ESPINOZA
CALCULATED-DESIGNED BY: JOSE L. VALDEZ
CHECKED BY: ERIC SOUZA
REVISED BY
DATE REVISED

LAST REVISION 05/20/10
DATE PLOTTED => 25-AUG-2010
TIME PLOTTED => 10:04

Dist	COUNTY	ROUTE	POST MILES TOTAL PROJECT	SHEET No.	TOTAL SHEETS
03	Yub	70	R7.0/13.6	18	113

REGISTERED CIVIL ENGINEER 7-26-10 DATE

7-26-10
PLANS APPROVAL DATE

REGISTERED PROFESSIONAL ENGINEER
ERIC NORMAN SOUZA
No. 75706
Exp. 06-30-12
CIVIL
STATE OF CALIFORNIA

THE STATE OF CALIFORNIA OR ITS OFFICERS OR AGENTS SHALL NOT BE RESPONSIBLE FOR THE ACCURACY OR COMPLETENESS OF SCANNED COPIES OF THIS PLAN SHEET.

NOTES:

1. FOR ACCURATE RIGHT OF WAY DATA, CONTACT RIGHT OF WAY ENGINEERING AT THE DISTRICT OFFICE.
2. CONFORM LOCATION FOR PLACING HMA-A AND RWMA-O OVERLAYS IS THE SAME UNLESS OTHERWISE SHOWN OR NOTED. DO NOT PAVE ACROSS SOUTH MARYSVILLE UNDERCROSSING.
3. CONFORM LOCATIONS AS SHOWN OR AS DIRECTED BY THE ENGINEER.
4. FOR ALL GUARDRAIL LOCATIONS SEE QUANTITY SHEETS.

LEGEND

—— CONFORM LOCATION FOR HMA-A

- - - CONFORM LOCATION FOR RWMA-O

ABBREVIATIONS

HMA-A - HOT MIX ASPHALT (TYPE A)
RWMA-O - RUBBERIZED WARM MIX ASPHALT (OPEN GRADED)
EAA - END ANCHOR ASSEMBLY
TR - TRANSITION RAILING
ATS (IN-LINE) - ALTERNATIVE IN-LINE TERMINAL SYSTEM
ATS (FLARED) - ALTERNATIVE FLARED TERMINAL SYSTEM
(N) - NOT A SEPARATE PAY ITEM, FOR INFORMATION ONLY

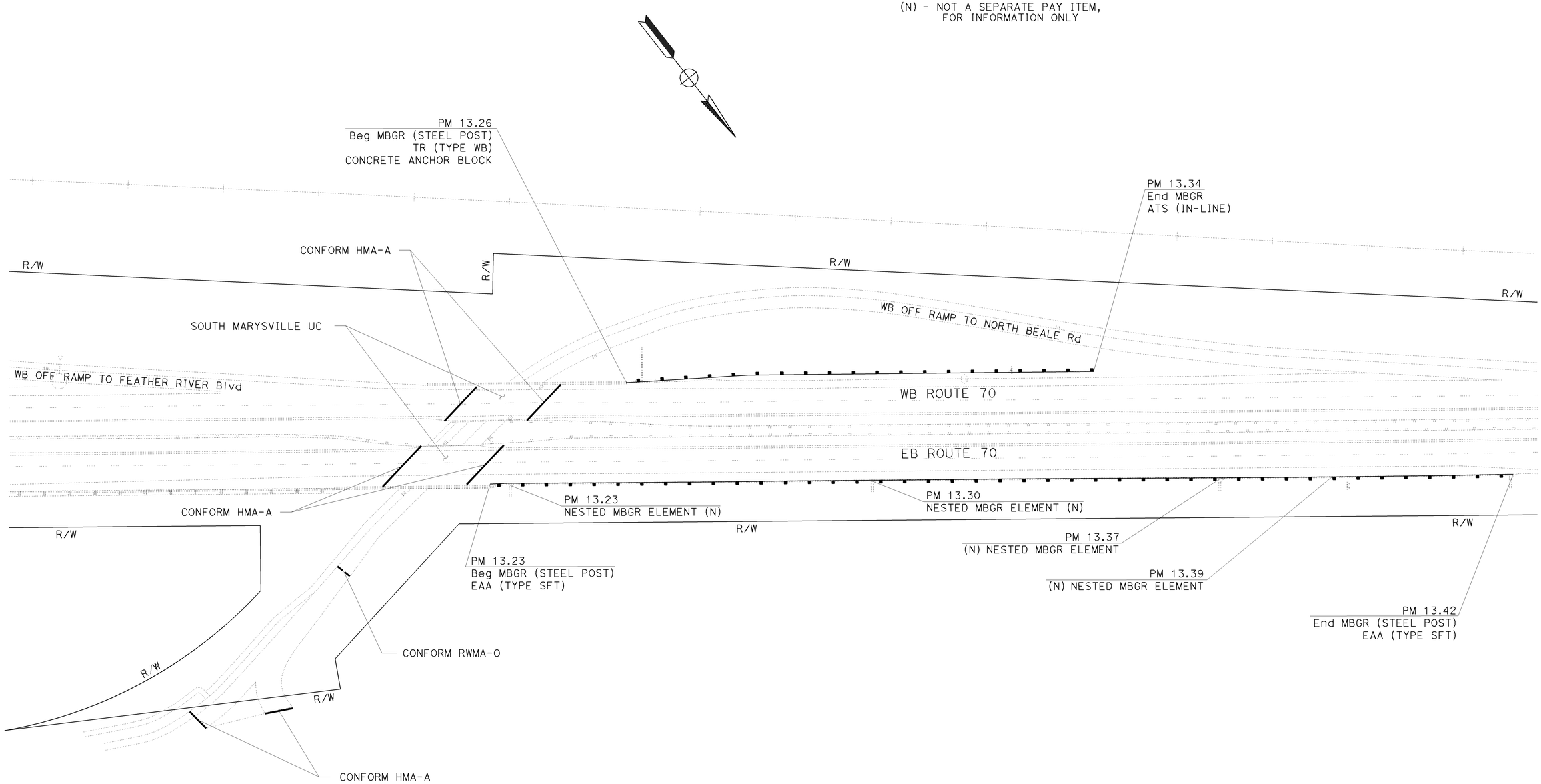

CONSTRUCTION DETAILS

SCALE: 1" = 50'

C-10

STATE OF CALIFORNIA - DEPARTMENT OF TRANSPORTATION
Caltrans® PROJECT DEVELOPMENT

FUNCTIONAL SUPERVISOR: KEVIN ESPINOZA
CALCULATED-DESIGNED BY: JOSE L. VALDEZ
CHECKED BY: ERIC SOUZA
REVISED BY
DATE REVISED

LAST REVISION 05/20/10
DATE PLOTTED => 25-AUG-2010
TIME PLOTTED => 10:04

Dist	COUNTY	ROUTE	POST MILES TOTAL PROJECT	SHEET No.	TOTAL SHEETS
03	Yub	70	R7.0/13.6	19	113

REGISTERED CIVIL ENGINEER 7-26-10 DATE

7-26-10
PLANS APPROVAL DATE

REGISTERED PROFESSIONAL ENGINEER
ERIC NORMAN SOUZA
No. 75706
Exp. 06-30-12
CIVIL
STATE OF CALIFORNIA

THE STATE OF CALIFORNIA OR ITS OFFICERS OR AGENTS SHALL NOT BE RESPONSIBLE FOR THE ACCURACY OR COMPLETENESS OF SCANNED COPIES OF THIS PLAN SHEET.

NOTES:

1. FOR ACCURATE RIGHT OF WAY DATA, CONTACT RIGHT OF WAY ENGINEERING AT THE DISTRICT OFFICE.
2. CONFORM LOCATION FOR PLACING HMA (TYPE A) AND RWMA-O OVERLAYS IS THE SAME UNLESS OTHERWISE SHOWN OR NOTED.
3. CONFORM LOCATIONS AS SHOWN OR AS DIRECTED BY THE ENGINEER.
4. FOR ALL GUARDRAIL LOCATIONS SEE QUANTITY SHEETS.

LEGEND

—— CONFORM LOCATION FOR HMA-A
- - - CONFORM LOCATION FOR RWMA-O

ABBREVIATIONS

HMA-A - HOT MIX ASPHALT (TYPE A)
RWMA-O - RUBBERIZED WARM MIX ASPHALT (OPEN GRADED)
EAA - END ANCHOR ASSEMBLY
TR - TRANSITION RAILING
ATS (IN-LINE) - ALTERNATIVE IN-LINE TERMINAL SYSTEM
ATS (FLARED) - ALTERNATIVE FLARED TERMINAL SYSTEM

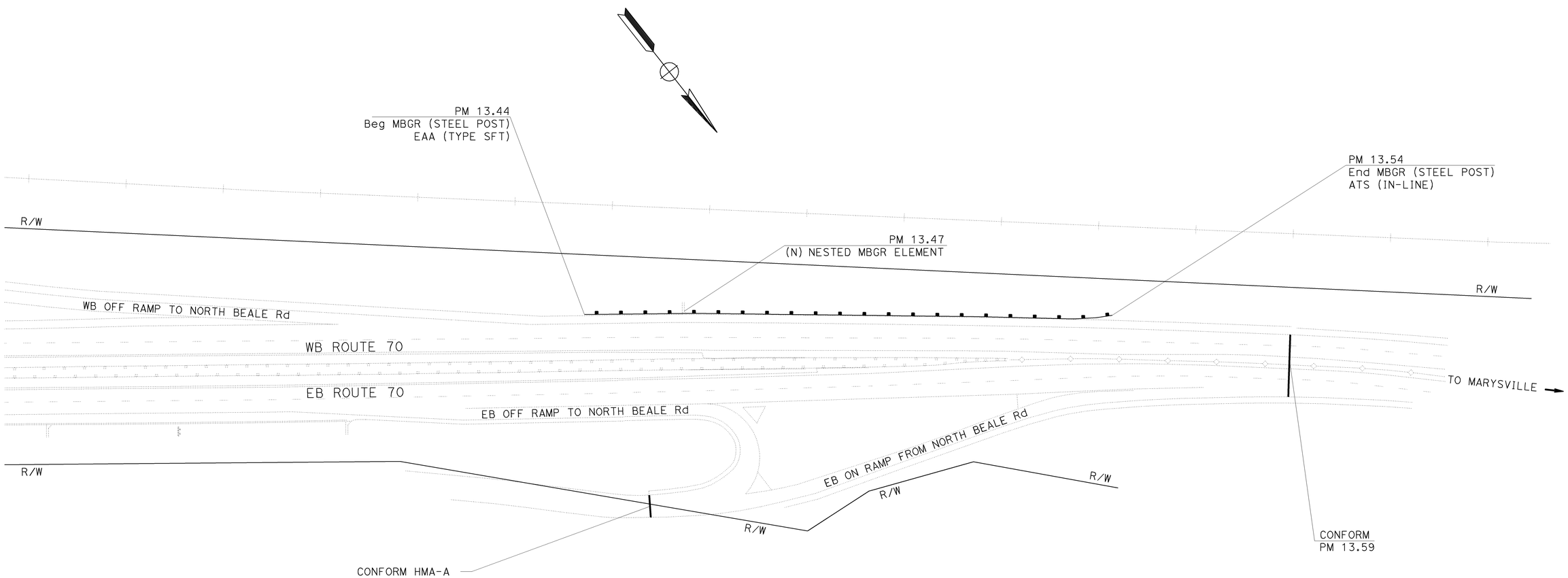

CONSTRUCTION DETAILS

SCALE: 1" = 50'

C-11

STATE OF CALIFORNIA - DEPARTMENT OF TRANSPORTATION
Caltrans PROJECT DEVELOPMENT

FUNCTIONAL SUPERVISOR: KEVIN ESPINOZA
CALCULATED-DESIGNED BY: JOSE L. VALDEZ
CHECKED BY: ERIC SOUZA
REVISED BY
DATE REVISED

LAST REVISION 05/19/10
DATE PLOTTED => 25-AUG-2010
TIME PLOTTED => 10:04

Dist	COUNTY	ROUTE	POST MILES TOTAL PROJECT	SHEET No.	TOTAL SHEETS
03	Yub	70	R7.0/13.6	20	113

REGISTERED CIVIL ENGINEER 7-26-10 DATE

7-26-10
PLANS APPROVAL DATE

REGISTERED PROFESSIONAL ENGINEER ERIC NORMAN SOUZA No. 75706 Exp. 06-30-12 CIVIL STATE OF CALIFORNIA

THE STATE OF CALIFORNIA OR ITS OFFICERS OR AGENTS SHALL NOT BE RESPONSIBLE FOR THE ACCURACY OR COMPLETENESS OF SCANNED COPIES OF THIS PLAN SHEET.

NOTES:

1. USE THE FOLLOWING DETAILS WHERE APPLICABLE AS DIRECTED BY THE ENGINEER.
2. AT THE CONFORM: IF THE ADJOINING PAVEMENT SURFACE IS DOWNSLOPE FROM THE NEW RWMA-O PAVEMENT SURFACE, THEN USE TAPER DETAIL 4 ON SHEET C-15.

LEGEND

- COLD PLANE AC Pvmt

ABBREVIATIONS

OGAC - OPEN GRADED ASPHALT CONCRETE
DGAC - DENSE GRADE ASPHALT CONCRETE
HMA-A - HOT MIX ASPHALT (TYPE A)
RWMA-O - RUBBERIZED WARM MIX ASPHALT (OPEN GRADED)

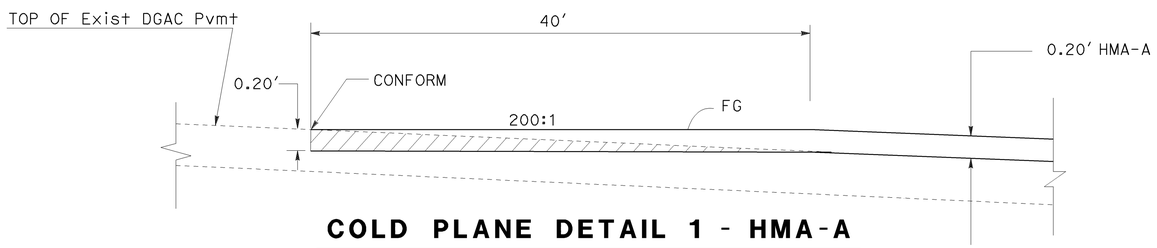

COLD PLANE DETAIL 1 - HMA-A

ON / OFF RAMPS

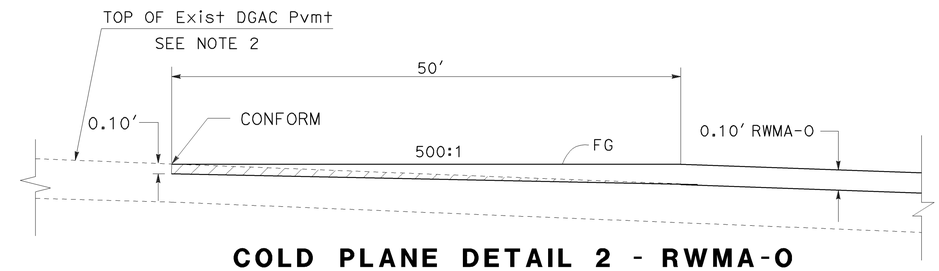

COLD PLANE DETAIL 2 - RWMA-O

ON / OFF RAMPS

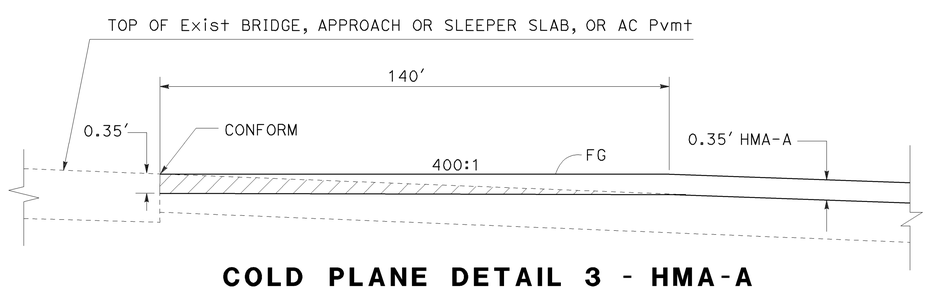

COLD PLANE DETAIL 3 - HMA-A

ROUTE 70

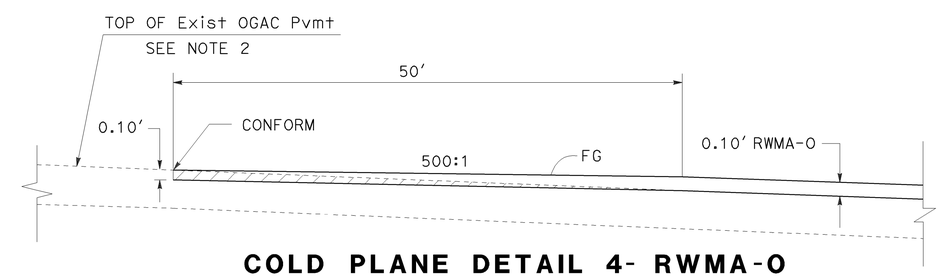

COLD PLANE DETAIL 4- RWMA-O

ROUTE 70

CONSTRUCTION DETAILS

NO SCALE

C-12

REVISED BY | DATE REVISED
MIKE PANCHESSON | ERIC SOUZA
CALCULATED-DESIGNED BY | CHECKED BY
FUNCTIONAL SUPERVISOR
KEVIN ESPINOZA

STATE OF CALIFORNIA - DEPARTMENT OF TRANSPORTATION
Caltrans® PROJECT DEVELOPMENT

LAST REVISION 05/14/10 | DATE PLOTTED => 25-AUG-2010 | TIME PLOTTED => 10:04

Dist	COUNTY	ROUTE	POST MILES TOTAL PROJECT	SHEET No.	TOTAL SHEETS
03	Yub	70	R7.0/13.6	21	113

REGISTERED CIVIL ENGINEER 7-26-10 DATE

7-26-10
PLANS APPROVAL DATE

REGISTERED PROFESSIONAL ENGINEER
ERIC NORMAN SOUZA
No. 75706
Exp. 06-30-12
CIVIL
STATE OF CALIFORNIA

THE STATE OF CALIFORNIA OR ITS OFFICERS OR AGENTS SHALL NOT BE RESPONSIBLE FOR THE ACCURACY OR COMPLETENESS OF SCANNED COPIES OF THIS PLAN SHEET.

LEGEND

- COLD PLANE AC Pvmt

ABBREVIATIONS

OGAC - OPEN GRADED ASPHALT CONCRETE
DGAC - DENSE GRADE ASPHALT CONCRETE
HMA-A - HOT MIX ASPHALT (TYPE A)
RWMA-O - RUBBERIZED WARM MIX ASPHALT (OPEN GRADED)

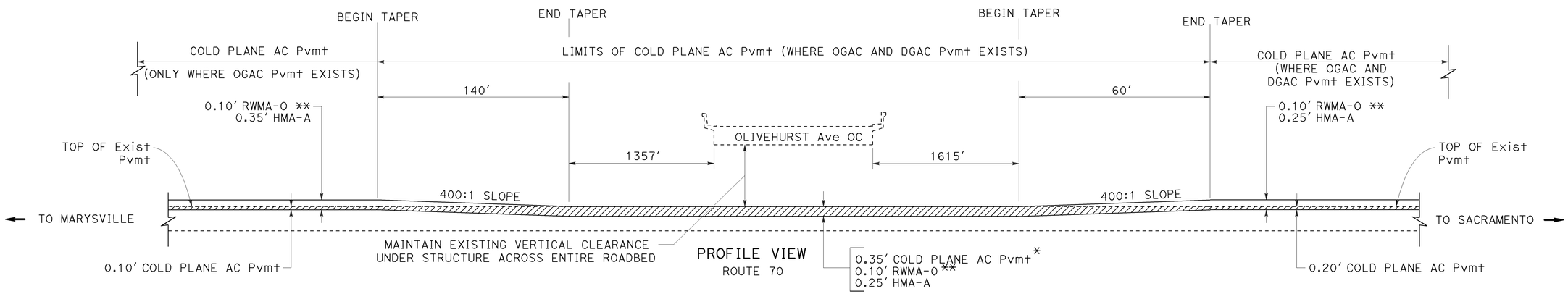

COLD PLANE DETAIL 6

* BEYOND EXIST OGAC Pvmt WIDTH - 0.25' COLD PLANE AC Pvmt
** SEE TYPICAL CROSS SECTIONS SHEETS X-2, X-3 AND X-4 FOR RWMA-O PAVING WIDTHS AND Exist Str SECTIONS.

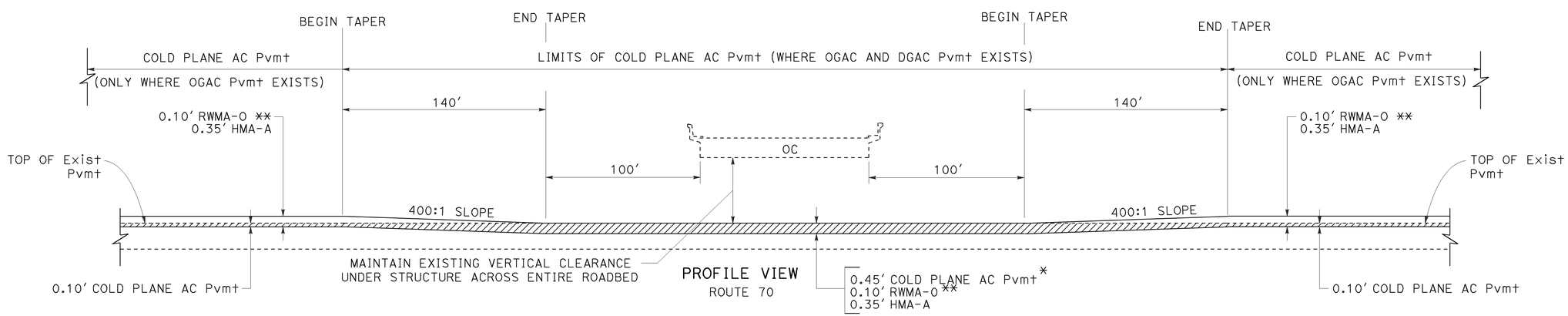

COLD PLANE DETAIL 5

* BEYOND EXIST OGAC Pvmt WIDTH - 0.35' COLD PLANE AC Pvmt
** SEE TYPICAL CROSS SECTIONS SHEETS FOR RWMA-O PAVING WIDTHS AND Exist Str SECTIONS.

CONSTRUCTION DETAILS

NO SCALE

C-13

REVISED BY | DATE REVISED
MIKE PANCHESSON | ERIC SOUZA
CALCULATED-DESIGNED BY | CHECKED BY
FUNCTIONAL SUPERVISOR
KEVIN ESPINOZA

STATE OF CALIFORNIA - DEPARTMENT OF TRANSPORTATION
Caltrans® PROJECT DEVELOPMENT

LAST REVISION 05/14/10 | DATE PLOTTED => 25-AUG-2010 | TIME PLOTTED => 10:04

Dist	COUNTY	ROUTE	POST MILES TOTAL PROJECT	SHEET No.	TOTAL SHEETS
03	Yub	70	R7.0/13.6	22	113

REGISTERED CIVIL ENGINEER 7-26-10 DATE

7-26-10
PLANS APPROVAL DATE

REGISTERED PROFESSIONAL ENGINEER ERIC NORMAN SOUZA No. 75706 Exp. 06-30-12 CIVIL STATE OF CALIFORNIA

THE STATE OF CALIFORNIA OR ITS OFFICERS OR AGENTS SHALL NOT BE RESPONSIBLE FOR THE ACCURACY OR COMPLETENESS OF SCANNED COPIES OF THIS PLAN SHEET.

NOTES:

1. MAINTAIN EXSITING CROSS WALK GRADE AND CROSS SLOPE ALONG ITS ENTIRE LENGTH.

ABBREVIATIONS

OGAC - OPEN GRADED ASPHALT CONCRETE
DGAC - DENSE GRADE ASPHALT CONCRETE
HMA-A - HOT MIX ASPHALT (TYPE A)
RWMA-O - RUBBERIZED WARM MIX ASPHALT (OPEN GRADED)
(N) - NOT A SEPARATE PAY ITEM, FOR INFORMATION ONLY

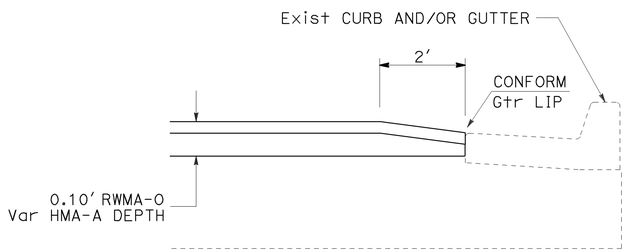

TAPER DETAIL 1 - RWMA-O

OLIVEHURST Ave
FEATHER RIVER Blvd
NORTH BEALE Rd

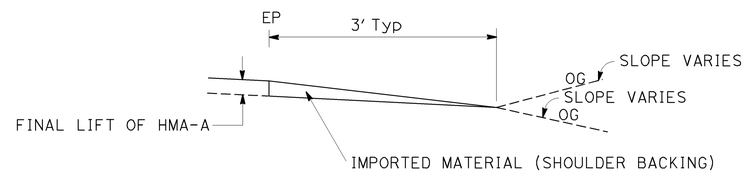

IMPORTED MATERIAL (SHOULDER BACKING)

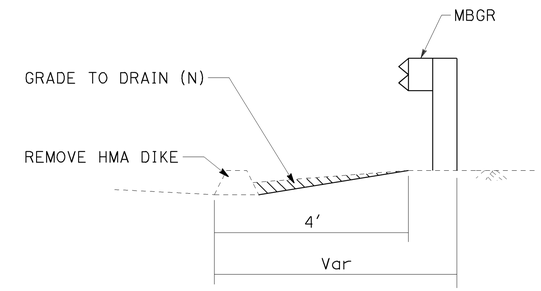

DIKE REMOVAL AND MBGR

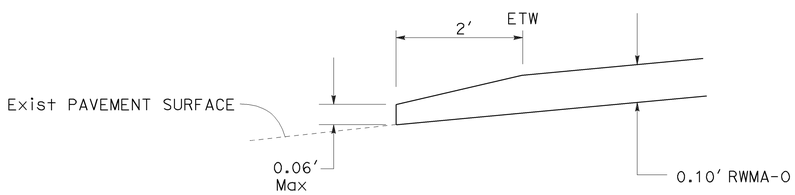

TAPER DETAIL 2 - RWMA-O- MAINLINE

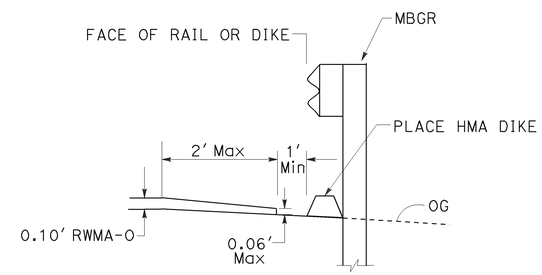

TAPER DETAIL 3 - RWMA-O

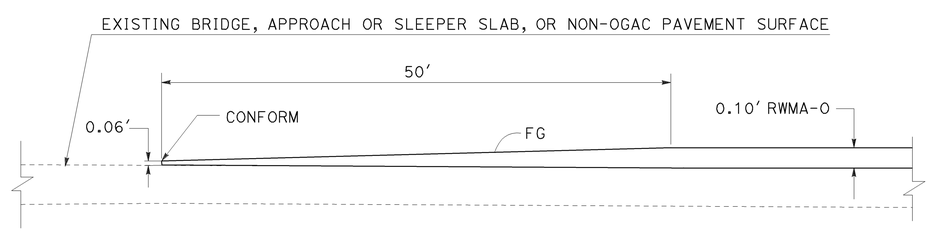

TAPER DETAIL 4 - RWMA-O

CONSTRUCTION DETAILS

NO SCALE

C-14

STATE OF CALIFORNIA - DEPARTMENT OF TRANSPORTATION
Caltrans® PROJECT DEVELOPMENT

FUNCTIONAL SUPERVISOR: KEVIN ESPINOZA
CALCULATED-DESIGNED BY: MIKE PANCHESSON
CHECKED BY: ERIC SOUZA
REVISED BY
DATE REVISED

LAST REVISION 05/14/10 | DATE PLOTTED => 25-AUG-2010 | TIME PLOTTED => 10:04

Dist	COUNTY	ROUTE	POST MILES TOTAL PROJECT	SHEET No.	TOTAL SHEETS
03	Yub	70	R7.0/13.6	23	113

REGISTERED CIVIL ENGINEER 7-26-10 DATE

7-26-10
PLANS APPROVAL DATE

REGISTERED PROFESSIONAL ENGINEER
ERIC NORMAN SOUZA
No. 75706
Exp. 06-30-12
CIVIL
STATE OF CALIFORNIA

THE STATE OF CALIFORNIA OR ITS OFFICERS OR AGENTS SHALL NOT BE RESPONSIBLE FOR THE ACCURACY OR COMPLETENESS OF SCANNED COPIES OF THIS PLAN SHEET.

ABBREVIATIONS

OGAC - OPEN GRADED ASPHALT CONCRETE
DGAC - DENSE GRADE ASPHALT CONCRETE
HMA-A - HOT MIX ASPHALT (TYPE A)
RWMA-O - RUBBERIZED WARM MIX ASPHALT (OPEN GRADED)

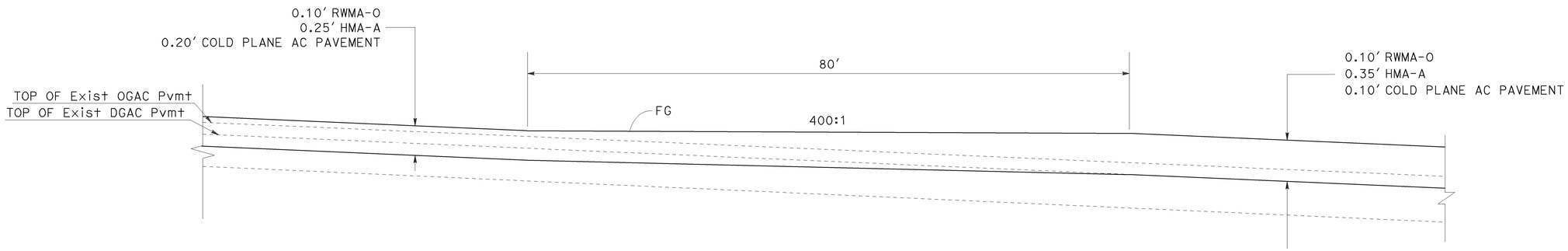

TAPER DETAIL 5 - MAIN LINE HMA-A AND RWMA-O

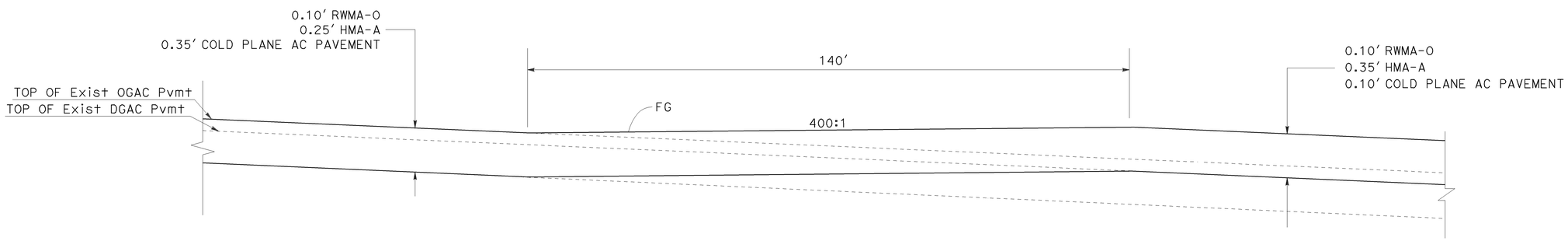

TAPER DETAIL 6 - MAIN LINE HMA-A AND RWMA-O

CONSTRUCTION DETAILS

NO SCALE

C-15

STATE OF CALIFORNIA - DEPARTMENT OF TRANSPORTATION
Caltrans PROJECT DEVELOPMENT

FUNCTIONAL SUPERVISOR: KEVIN ESPINOZA
CALCULATED-DESIGNED BY: JOSE L. VALDEZ
CHECKED BY: ERIC SOUZA
REVISED BY
DATE REVISED

LAST REVISION 05/14/10
DATE PLOTTED => 25-AUG-2010
TIME PLOTTED => 10:04

Dist	COUNTY	ROUTE	POST MILES TOTAL PROJECT	SHEET No.	TOTAL SHEETS
03	Yub	70	R7.0/13.6	24	113

REGISTERED CIVIL ENGINEER 7-26-10 DATE

7-26-10
PLANS APPROVAL DATE

REGISTERED PROFESSIONAL ENGINEER
ERIC NORMAN SOUZA
No. 75706
Exp. 06-30-12
CIVIL
STATE OF CALIFORNIA

THE STATE OF CALIFORNIA OR ITS OFFICERS OR AGENTS SHALL NOT BE RESPONSIBLE FOR THE ACCURACY OR COMPLETENESS OF SCANNED COPIES OF THIS PLAN SHEET.

NOTES

1. RUMBLE STRIPS, AS SHOWN ON THIS PLAN SHALL NOT BE CONSTRUCTED ON BRIDGE DECKS OR BRIDGE APPROACH SLABS, OR ACROSS THE FULL WIDTH OF RAMPS.
2. SEE REVISED NEW STANDARD PLAN RNSP A40B FOR RUMBLE STRIP DETAILS.

LEGEND

⇨ DIRECTION OF TRAVEL

RUMBLE STRIP (GROUND-IN)

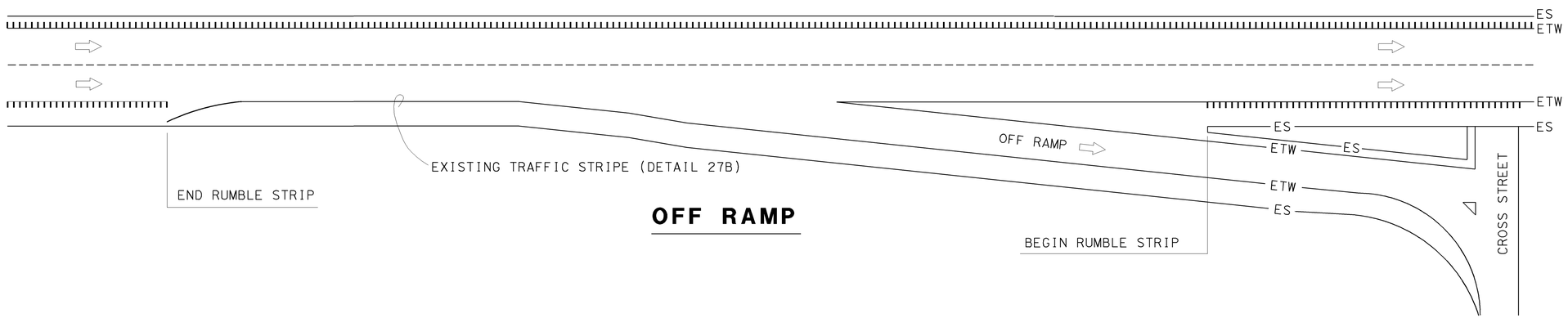

OFF RAMP

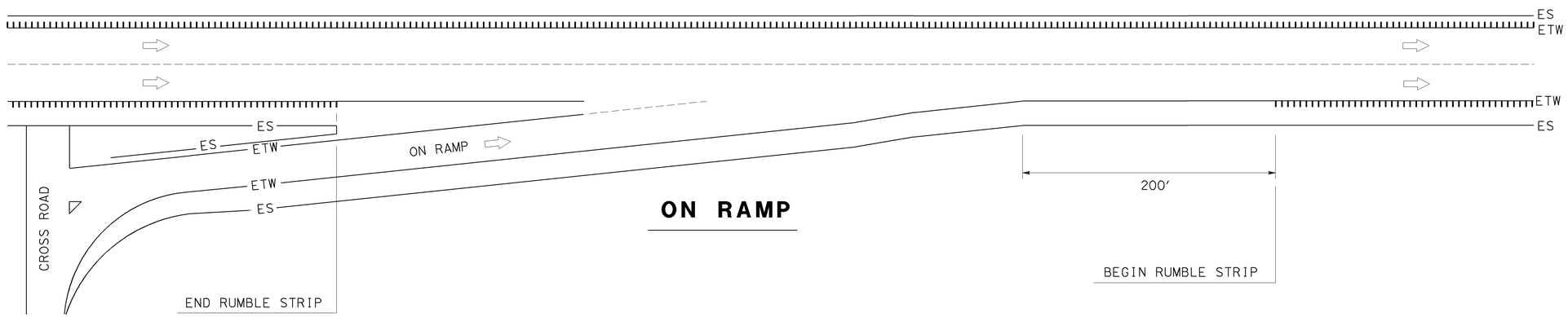

ON RAMP

CONSTRUCTION DETAILS

NO SCALE

C-16

STATE OF CALIFORNIA - DEPARTMENT OF TRANSPORTATION
Caltrans®
PROJECT DEVELOPMENT

FUNCTIONAL SUPERVISOR: KEVIN ESPINOZA
CALCULATED-DESIGNED BY: MIKE PANCHESSON
CHECKED BY: ERIC SOUZA
REVISED BY
DATE REVISED

LAST REVISION 04/21/10
DATE PLOTTED => 25-AUG-2010
TIME PLOTTED => 10:04

Dist	COUNTY	ROUTE	POST MILES TOTAL PROJECT	SHEET No.	TOTAL SHEETS
03	Yub	70	R7.0/13.6	25	113

REGISTERED CIVIL ENGINEER 7-26-10 DATE

7-26-10
PLANS APPROVAL DATE

REGISTERED PROFESSIONAL ENGINEER ERIC NORMAN SOUZA No. 75706 Exp. 06-30-12 CIVIL STATE OF CALIFORNIA

THE STATE OF CALIFORNIA OR ITS OFFICERS OR AGENTS SHALL NOT BE RESPONSIBLE FOR THE ACCURACY OR COMPLETENESS OF SCANNED COPIES OF THIS PLAN SHEET.

NOTES:

1. SEE SUMMARY OF QUANTITIES SHEET Q-2 FOR APPROXIMATE LOCATIONS OF NESTED MBGR.
2. FOR DETAILS NOT SHOWN, SEE STANDARD PLANS A77A2 AND A77C2.
3. EXISTING UTILITIES HAVE NOT BEEN POSTIVELY LOCATED.
4. FINAL LOCATIONS OF NESTED MBGR TO BE DETERMINED BY ENGINEER.

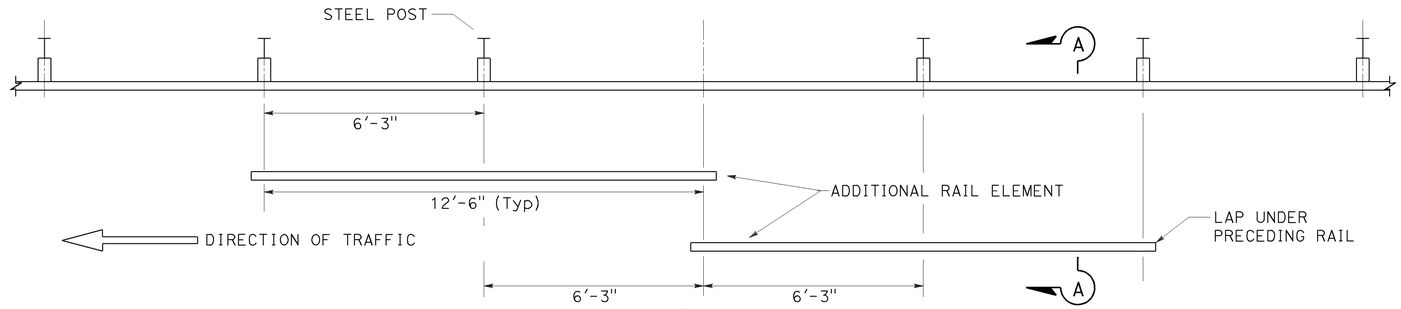

PLAN

CASE 1 - ONE POST OMITTED (SPLICE IN CENTER)

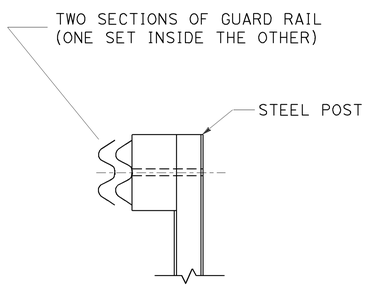

SECTION A-A

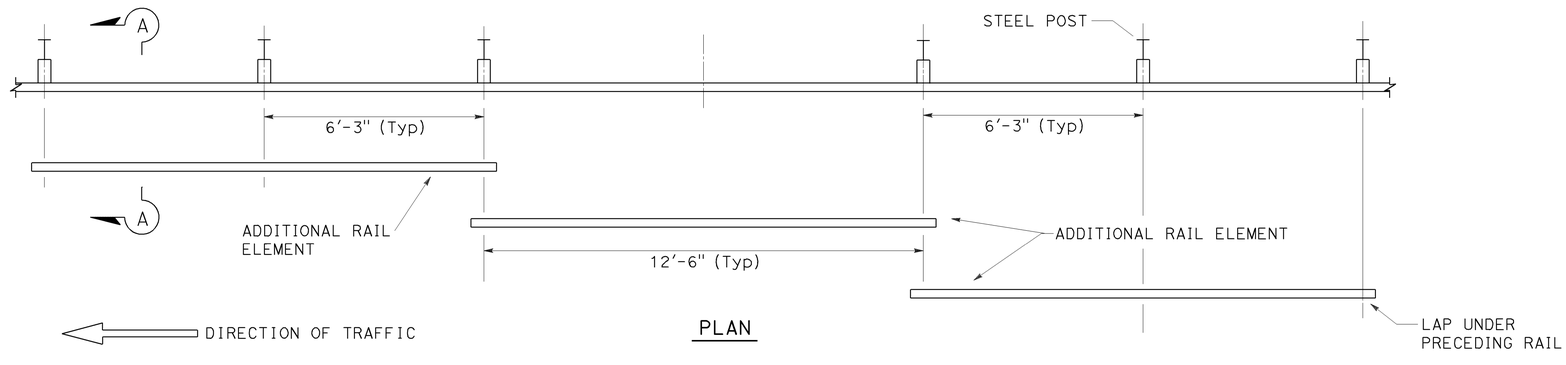

PLAN

CASE 2 - ONE POST OMITTED (SPLICE AT POSTS)

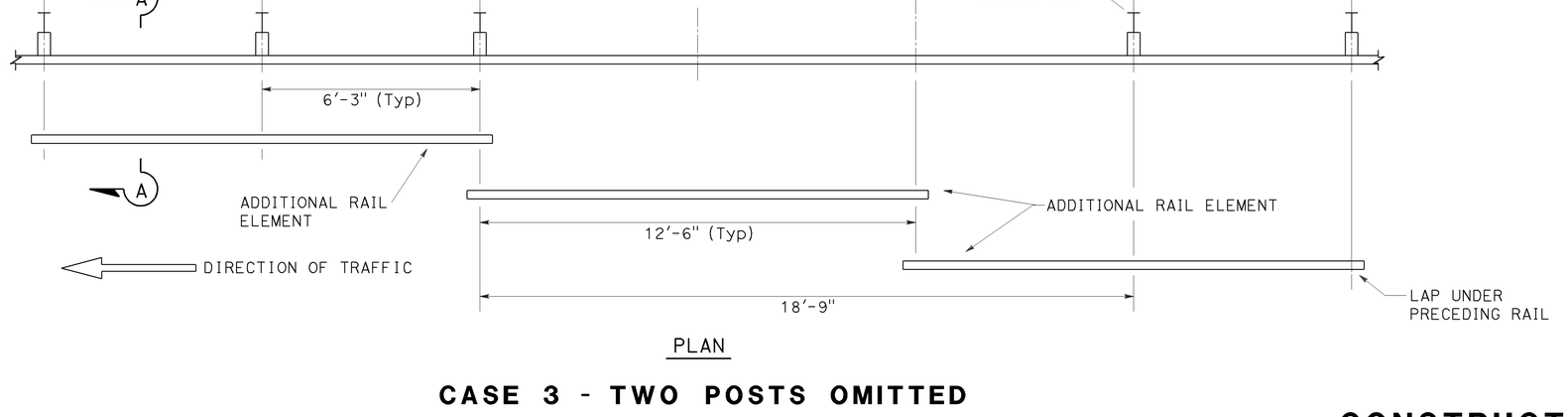

PLAN

CASE 3 - TWO POSTS OMITTED

NESTED METAL BEAM GUARDRAIL DETAILS

CONSTRUCTION DETAILS

NO SCALE

C-17

STATE OF CALIFORNIA - DEPARTMENT OF TRANSPORTATION
Caltrans® PROJECT DEVELOPMENT

FUNCTIONAL SUPERVISOR: KEVIN ESPINOZA
CALCULATED-DESIGNED BY: MIKE PANCHESSON
CHECKED BY: ERIC SOUZA
REVISED BY
DATE REVISED

LAST REVISION 05/03/10
DATE PLOTTED => 25-AUG-2010
TIME PLOTTED => 10:04

Dist	COUNTY	ROUTE	POST MILES TOTAL PROJECT	SHEET No.	TOTAL SHEETS
03	Yub	70	R7.0/13.6	26	113

REGISTERED CIVIL ENGINEER 7-26-10 DATE

7-26-10
PLANS APPROVAL DATE

REGISTERED PROFESSIONAL ENGINEER ERIC NORMAN SOUZA No. 75706 Exp. 06-30-12 CIVIL STATE OF CALIFORNIA

THE STATE OF CALIFORNIA OR ITS OFFICERS OR AGENTS SHALL NOT BE RESPONSIBLE FOR THE ACCURACY OR COMPLETENESS OF SCANNED COPIES OF THIS PLAN SHEET.

NOTES:

1. FOR DIMENSIONS NOT SHOWN, SEE STANDARD PLAN A87B.
2. COLD PLANE AC PAVEMENT PRIOR TO REPLACE AC SURFACING.

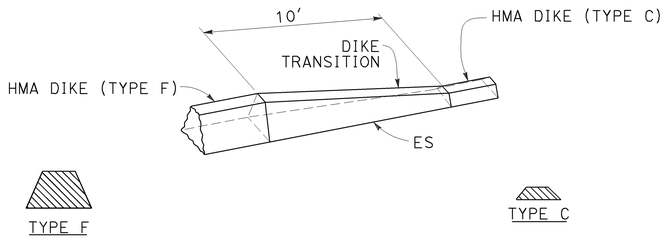

HMA DIKE (TYPE F) TO HMA DIKE (TYPE C)

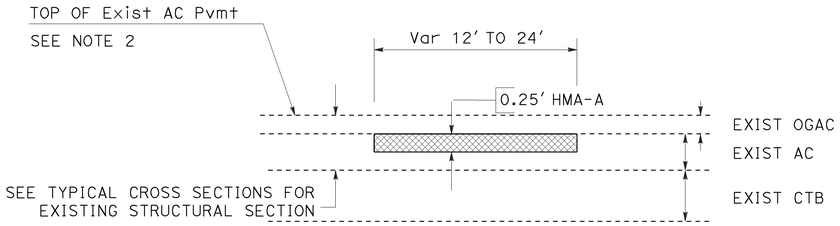

REPLACE AC SURFACING

MAINLINE

(SEE SHEET Q-4 FOR LOCATIONS)

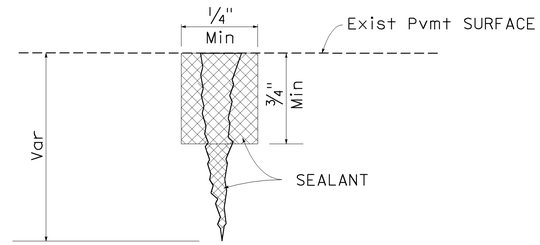

SECTION A-A

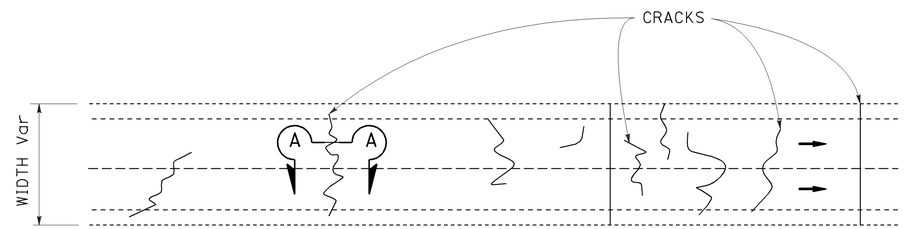

PLAN

CRACK TREATMENT

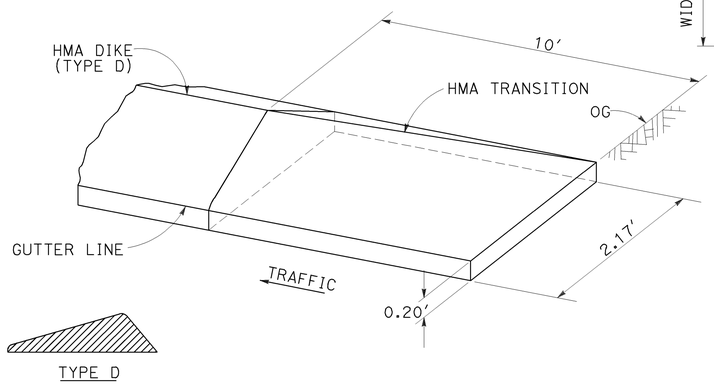

HMA DIKE (TYPE D) APPROACH TRANSITION

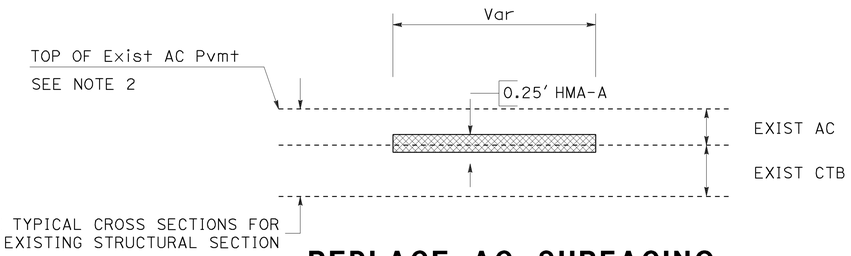

REPLACE AC SURFACING

RAMPS

(SEE SHEET Q-4 FOR LOCATIONS)

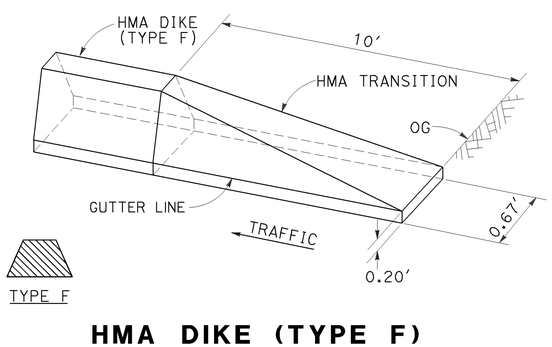

HMA DIKE (TYPE F) APPROACH TRANSITION

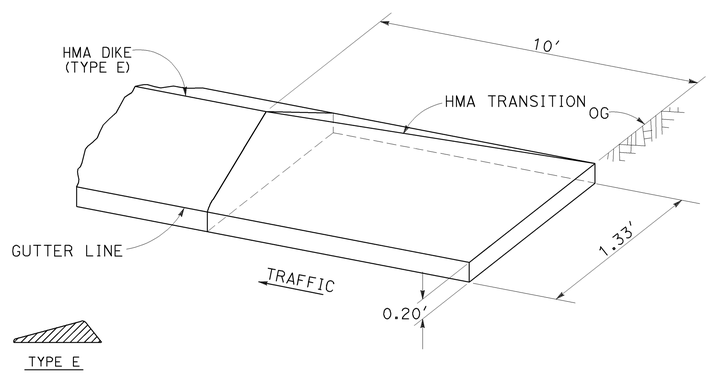

HMA DIKE (TYPE E) APPROACH TRANSITION

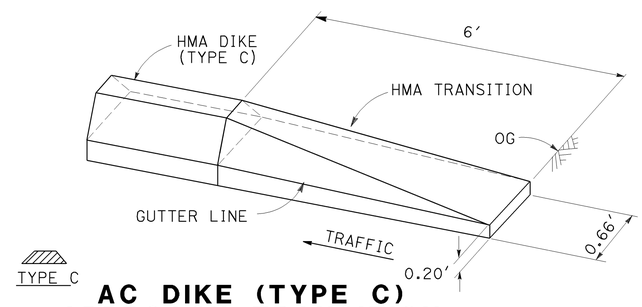

AC DIKE (TYPE C) APPROACH TRANSITION

CONSTRUCTION DETAILS

NO SCALE

C-18

STATE OF CALIFORNIA - DEPARTMENT OF TRANSPORTATION
Caltrans PROJECT DEVELOPMENT

FUNCTIONAL SUPERVISOR: KEVIN ESPINOZA
CALCULATED-DESIGNED BY: JOSE L. VALDEZ
CHECKED BY: ERIC SOUZA
REVISED BY
DATE REVISED

LAST REVISION 05/03/10
DATE PLOTTED => 25-AUG-2010
TIME PLOTTED => 10:04

Dist	COUNTY	ROUTE	POST MILES TOTAL PROJECT	SHEET No.	TOTAL SHEETS
03	Yub	70	R7.0/13.6	27	113

REGISTERED CIVIL ENGINEER 7-26-10 DATE

7-26-10
PLANS APPROVAL DATE

REGISTERED PROFESSIONAL ENGINEER
ERIC NORMAN SOUZA
No. 75706
Exp. 06-30-12
CIVIL
STATE OF CALIFORNIA

THE STATE OF CALIFORNIA OR ITS OFFICERS OR AGENTS SHALL NOT BE RESPONSIBLE FOR THE ACCURACY OR COMPLETENESS OF SCANNED COPIES OF THIS PLAN SHEET.

NOTES:

1. FOR DIMENSIONS NOT SHOWN, SEE STANDARD PLAN A87B.

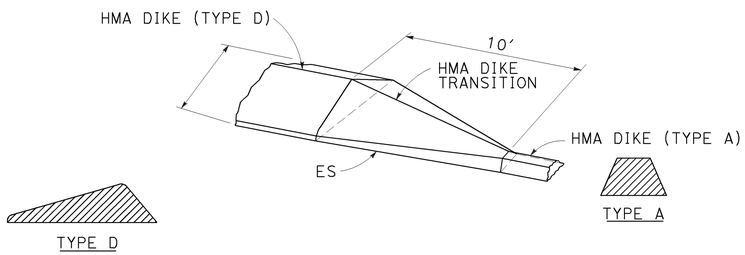

HMA DIKE (TYPE D) TO HMA DIKE (TYPE A)

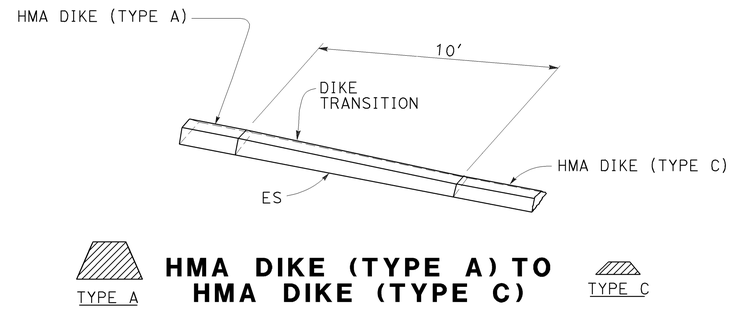

HMA DIKE (TYPE A) TO HMA DIKE (TYPE C)

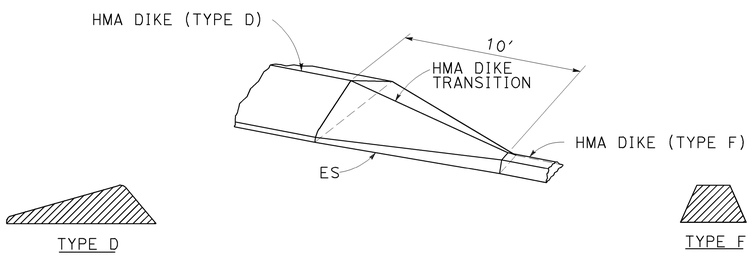

HMA DIKE (TYPE D) TO HMA DIKE (TYPE F)

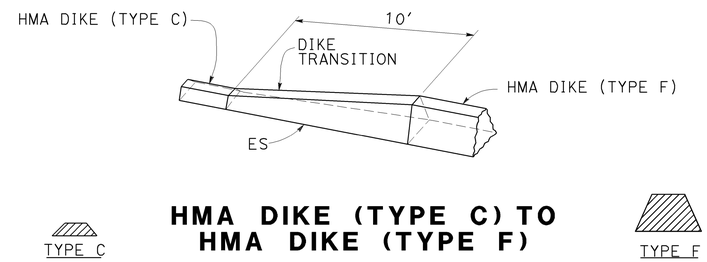

HMA DIKE (TYPE C) TO HMA DIKE (TYPE F)

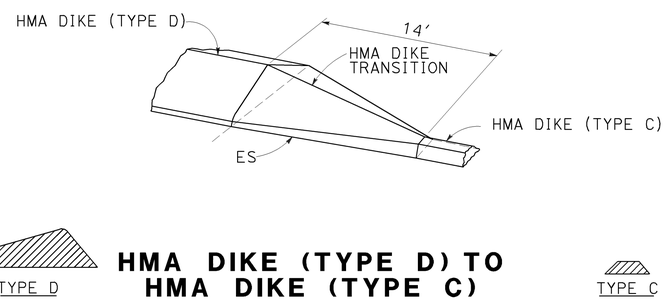

HMA DIKE (TYPE D) TO HMA DIKE (TYPE C)

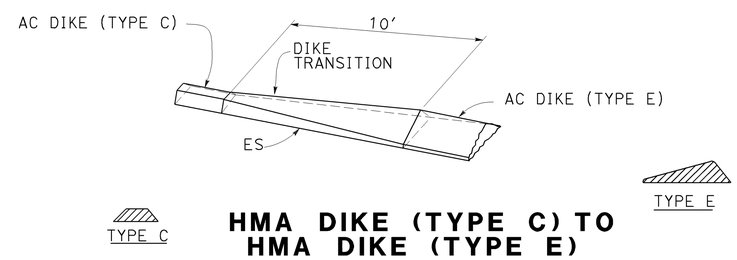

HMA DIKE (TYPE C) TO HMA DIKE (TYPE E)

CONSTRUCTION DETAILS

NO SCALE

C-19

STATE OF CALIFORNIA - DEPARTMENT OF TRANSPORTATION
Caltrans® PROJECT DEVELOPMENT

FUNCTIONAL SUPERVISOR: KEVIN ESPINOZA
CALCULATED-DESIGNED BY: CARMEN RODREIGUEZ
CHECKED BY: ERIC SOUZA
REVISED BY
DATE REVISED

LAST REVISION 05/03/10
DATE PLOTTED => 25-AUG-2010
TIME PLOTTED => 10:04

Dist	COUNTY	ROUTE	POST MILES TOTAL PROJECT	SHEET No.	TOTAL SHEETS
03	Yub	70	R7.0/13.6	28	113

REGISTERED CIVIL ENGINEER 7-26-10 DATE

7-26-10
PLANS APPROVAL DATE

REGISTERED PROFESSIONAL ENGINEER
ERIC NORMAN SOUZA
No. 75706
Exp. 06-30-12
CIVIL
STATE OF CALIFORNIA

THE STATE OF CALIFORNIA OR ITS OFFICERS OR AGENTS SHALL NOT BE RESPONSIBLE FOR THE ACCURACY OR COMPLETENESS OF SCANNED COPIES OF THIS PLAN SHEET.

NOTES:

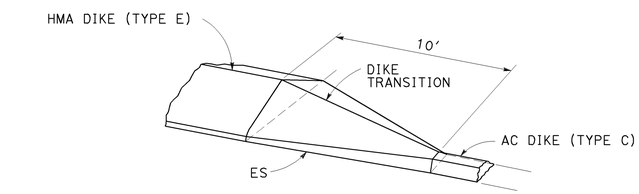

TYPE E

AC DIKE (TYPE E) TO AC DIKE (TYPE C)

TYPE C

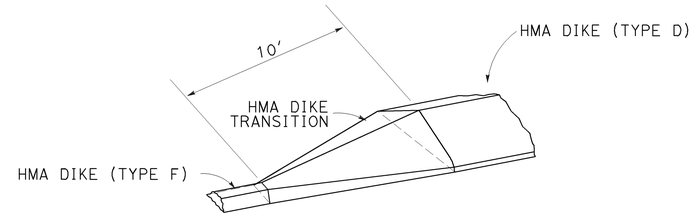

TYPE F

HMA DIKE (TYPE F) TO HMA DIKE (TYPE D)

TYPE D

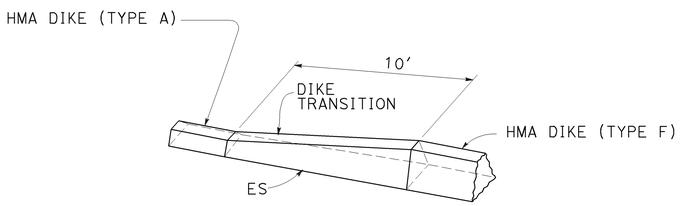

TYPE A

HMA DIKE (TYPE A) TO HMA DIKE (TYPE F)

TYPE F

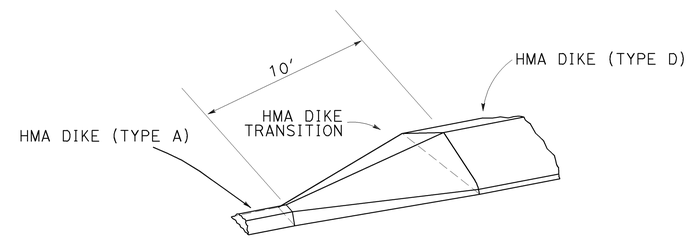

TYPE A

HMA DIKE (TYPE A) TO HMA DIKE (TYPE D)

TYPE D

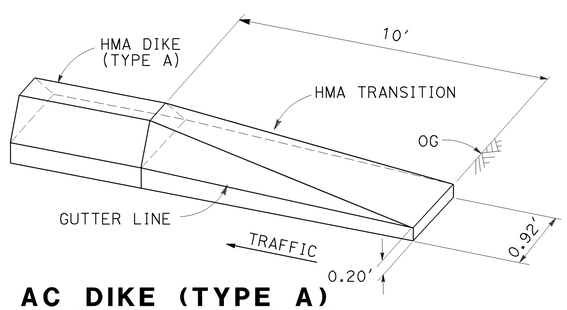

TYPE A

AC DIKE (TYPE A) APPROACH TRANSITION

CONSTRUCTION DETAILS

NO SCALE

C-20

STATE OF CALIFORNIA - DEPARTMENT OF TRANSPORTATION
Caltrans® PROJECT DEVELOPMENT

FUNCTIONAL SUPERVISOR: KEVIN ESPINOZA
CALCULATED-DESIGNED BY: JOSE L. VALDEZ
CHECKED BY: ERIC SOUZA
REVISED BY
DATE REVISED

LAST REVISION 05/03/10
DATE PLOTTED => 25-AUG-2010
TIME PLOTTED => 10:04

Dist	COUNTY	ROUTE	POST MILES TOTAL PROJECT	SHEET No.	TOTAL SHEETS
03	Yub	70	R7.0/13.6	29	113

M. A. Panchesson 7-26-10
REGISTERED CIVIL ENGINEER DATE

7-26-10
PLANS APPROVAL DATE

REGISTERED PROFESSIONAL ENGINEER M.A. PANCHESSON No. 44125 Exp. 06-30-11 CIVIL STATE OF CALIFORNIA

THE STATE OF CALIFORNIA OR ITS OFFICERS OR AGENTS SHALL NOT BE RESPONSIBLE FOR THE ACCURACY OR COMPLETENESS OF SCANNED COPIES OF THIS PLAN SHEET.

NOTES:

1. ALL STEEL TO BE USED WILL BE A36 MATERIAL.
   CHIP EXISTING CONCRETE AND EXPOSE A MINIMUM 0.25"
   OF EXISTING ANGLE OR FLAT BAR THAT WILL BE WELDED TO NEW ANGLE.
2. AT ALL LOCATIONS, NEW GRATES SHALL BE USED (TYPE 24-12).
3. ON ANY SIDE OF DI, WIDTH OF MINOR Conc TO BE NO GREATER THAN Exist DI WALL THICKNESS.
4. FIELD VERIFY DIMENSIONS "A" AND "B". SEE Std PLANS D73 AND REVISED Std PLAN D77A FOR FRAME AND GRATE DETAILS.

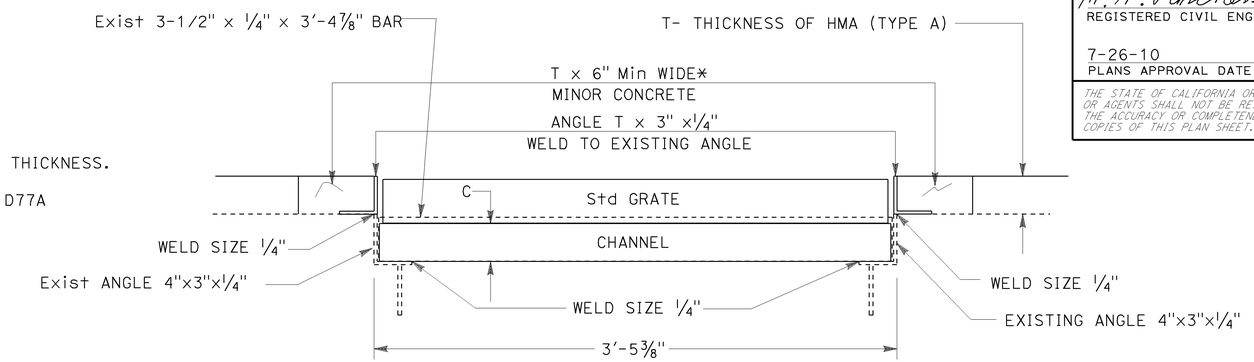

DI LONGITUDINAL SECTION

* SEE NOTE 3.

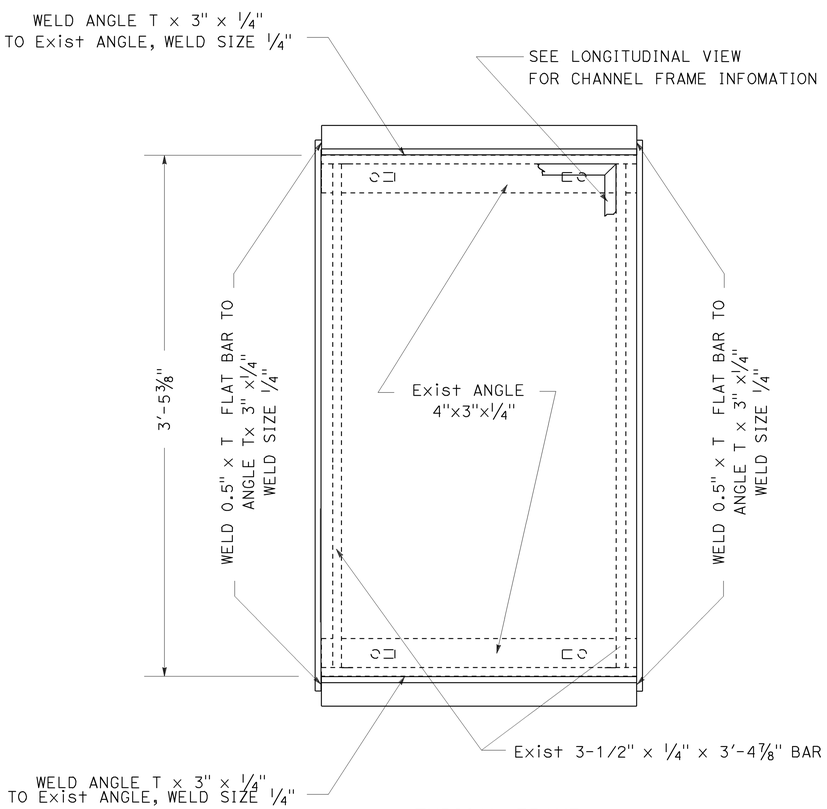

TYPICAL FRAME

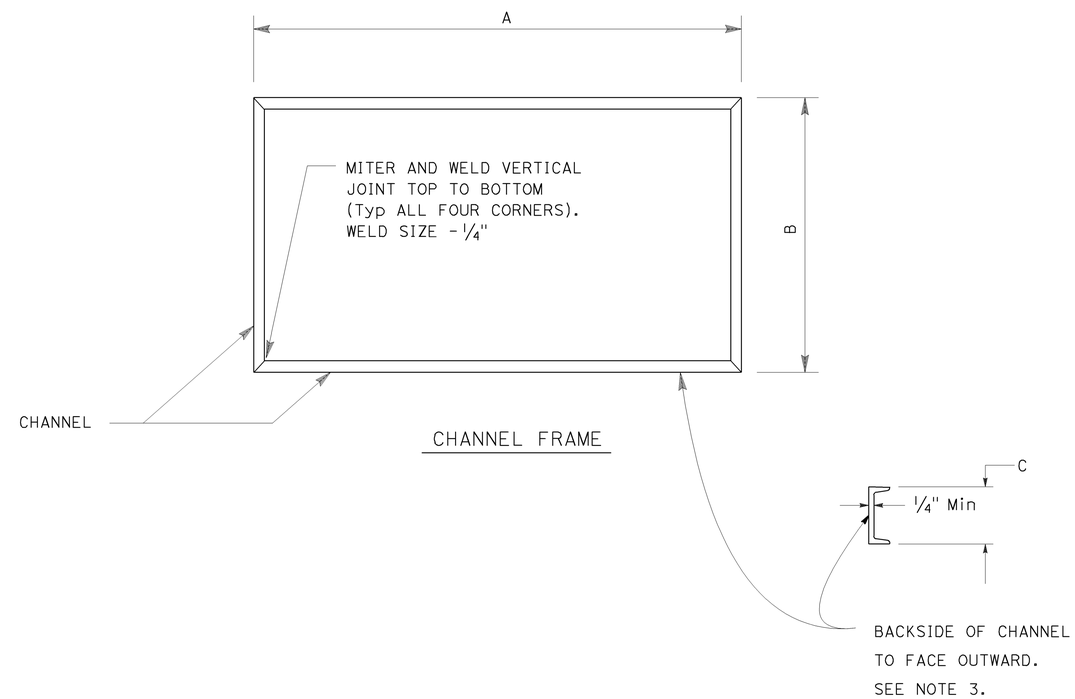

CHANNEL FRAME

LOCATION	DIRECTION	DI TYPE	DIMENSION*			
			T	A	B	C
L+ PM R8.38	EB	G2	0.35'	3'-4 5/8"	1'-11 3/4"	4"
L+ PM R8.45	EB	G2	0.35'	3'-4 5/8"	1'-11 3/4"	4"
L+ PM R9.0	EB, MEDIAN	G1	0.25'	3'-4 5/8"	1'-11 3/4"	3"

* SEE NOTE 4 ABOVE.

ADJUST FRAME AND GRATE TO GRADE

CONSTRUCTION DETAILS

NO SCALE

C-21

STATE OF CALIFORNIA - DEPARTMENT OF TRANSPORTATION
PROJECT DEVELOPMENT

FUNCTIONAL SUPERVISOR: KEVIN ESPINOZA
CALCULATED-DESIGNED BY: PATRICK BISHOP
CHECKED BY: DAVID ROBERTS
REVISED BY: M. P.
DATE REVISED: 5-18-10

LAST REVISION 04/16/10 | DATE PLOTTED => 25-AUG-2010 | TIME PLOTTED => 10:04

Dist	COUNTY	ROUTE	POST MILES TOTAL PROJECT	SHEET No.	TOTAL SHEETS
03	Yub	70	R7.0/13.6	30	113

M. A. Panchesson 7-26-10
REGISTERED CIVIL ENGINEER DATE

7-26-10
PLANS APPROVAL DATE

REGISTERED PROFESSIONAL ENGINEER M.A. PANCHESSON No. 44125 Exp. 06-30-11 CIVIL STATE OF CALIFORNIA

THE STATE OF CALIFORNIA OR ITS OFFICERS OR AGENTS SHALL NOT BE RESPONSIBLE FOR THE ACCURACY OR COMPLETENESS OF SCANNED COPIES OF THIS PLAN SHEET.

NOTE: EXISTING Conc BARRIER REINFORCEMENT NOT SHOWN. SEE 1988 Std PLAN A75-A:
http://www.dot.ca.gov/hq/esc/oe/project_plans/HTM/Archive.htm

LEGEND

T - THICKNESS - HMA (TYPE A)

- LIMITS OF BARRIER MODIFICATION

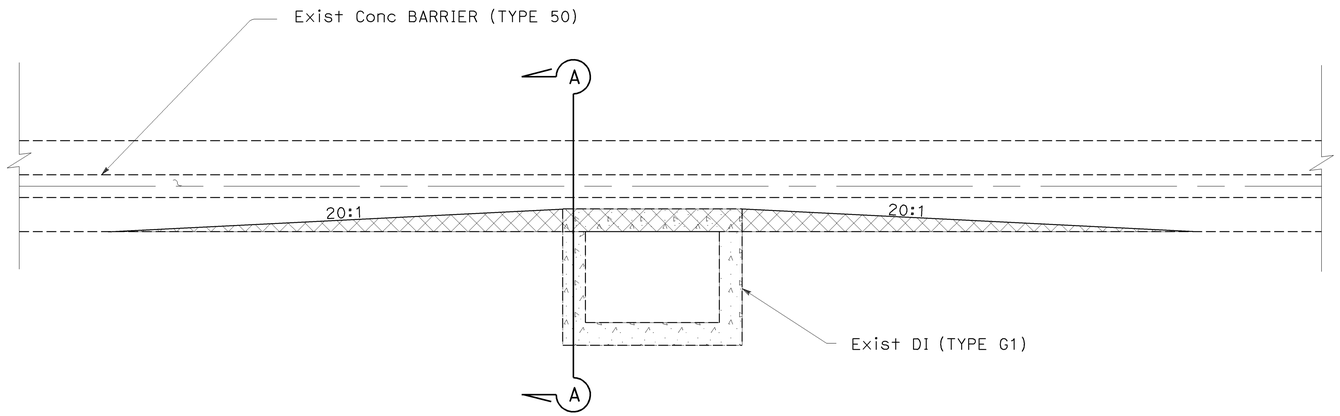

ADJUST INLET

PLAN

DI LOCATION	DIRECTION	DI TYPE	DIMENSION T
Lt PM R8.38	EB	G2	0.35′
Lt PM R8.45	EB	G2	0.35′
Lt PM R9.00	EB, MEDIAN	G1	0.25′

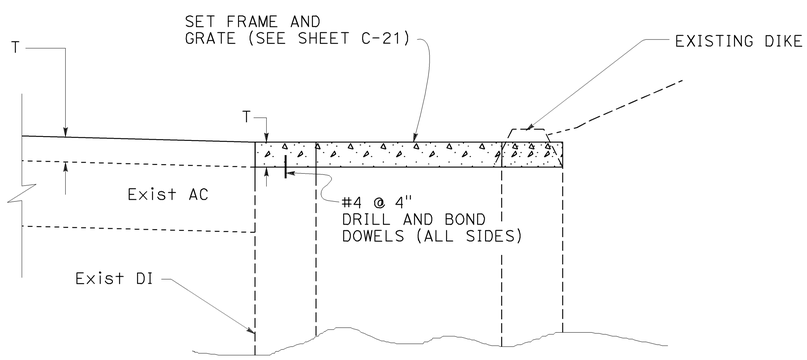

ADJUST INLET

DI (TYPE G2) LOCATIONS

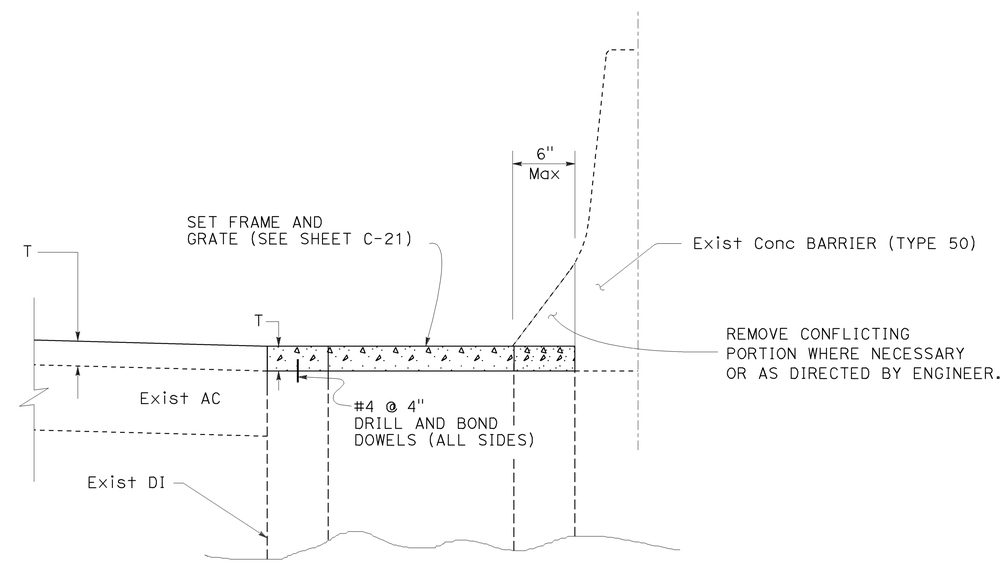

ADJUST INLET

SECTION A-A
DETAIL

CONSTRUCTION DETAILS

NO SCALE

C-22

REVISED BY | DATE REVISED
MIKE PANCHESSON | ERIC SOUZA
CALCULATED-DESIGNED BY | CHECKED BY
FUNCTIONAL SUPERVISOR
KEVIN ESPINOZA

STATE OF CALIFORNIA - DEPARTMENT OF TRANSPORTATION
Caltrans® PROJECT DEVELOPMENT

LAST REVISION 05/03/10 | DATE PLOTTED => 25-AUG-2010 | TIME PLOTTED => 10:04

Dist	COUNTY	ROUTE	POST MILES TOTAL PROJECT	SHEET No.	TOTAL SHEETS
03	Yub	70	R7.0/13.6	31	113

REGISTERED CIVIL ENGINEER 7-26-10 DATE

7-26-10
PLANS APPROVAL DATE

REGISTERED PROFESSIONAL ENGINEER
ERIC NORMAN SOUZA
No. 75706
Exp. 06-30-12
CIVIL
STATE OF CALIFORNIA

THE STATE OF CALIFORNIA OR ITS OFFICERS OR AGENTS SHALL NOT BE RESPONSIBLE FOR THE ACCURACY OR COMPLETENESS OF SCANNED COPIES OF THIS PLAN SHEET.

NOTES:

1. EXISTING BARRIER DIMENSIONS SHALL BE VERIFIED BY THE CONTRACTOR IN THE FIELD BEFORE FABRICATING ANY END CONNECTION TO CONFORM WITH EXISTING CONDITIONS.
2. CONCRETE ANCHOR BLOCKS SHALL BE SHIELDED FROM TRAFFIC UNTIL FINAL MBGR CONNECTION OCCURS
3. FOR DETAILS NOT SHOWN, SEE STANDARD PLAN A77J3 AND A77J4.
4. END CAP (TYPE TC) SANDWICHED BETWEEN 12 GAGE AND 10 GAGE THRIE BEAM ELEMENTS
5. ALL PLATES AND BOLTS ARE GALVANIZED.
6. EXCESS SOIL TO REMAIN ON SITE.

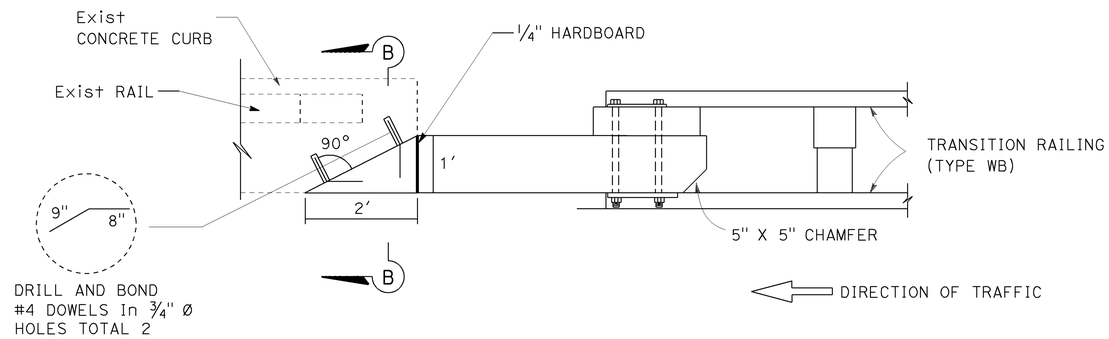

PLAN

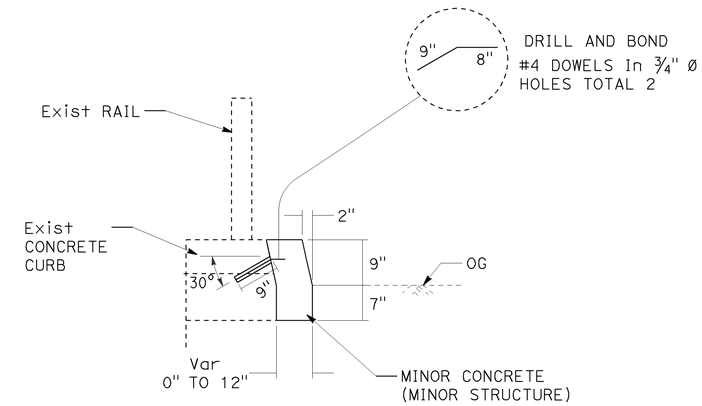

SECTION B-B

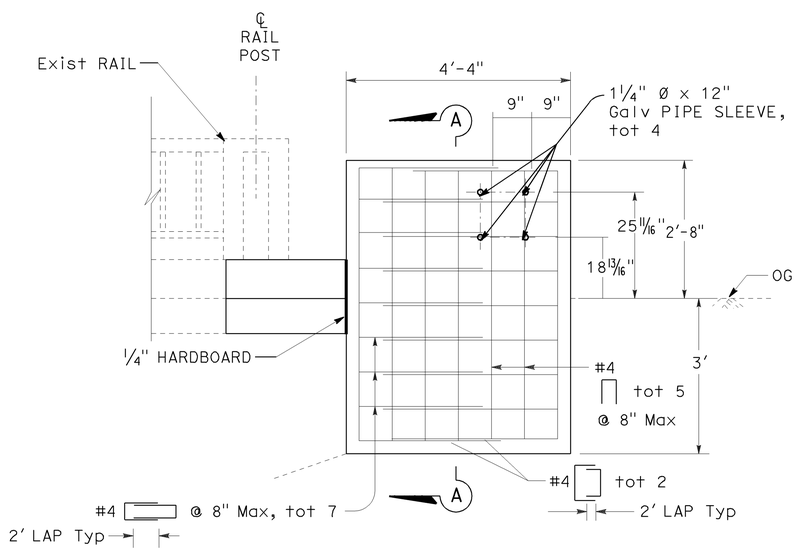

ELEVATION

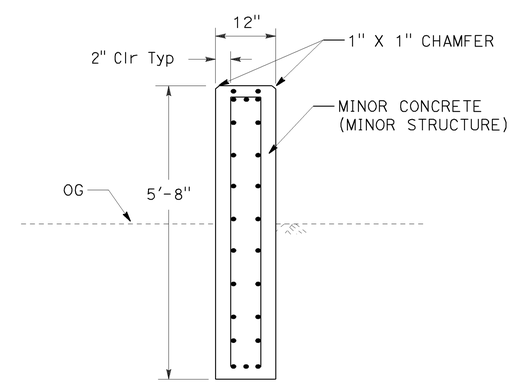

SECTION A-A

CONCRETE ANCHOR BLOCK
SOUTH MARYSVILLE UC
(ROUTE 70 PM 13.26 WB)

CONSTRUCTION DETAILS

NO SCALE

C-23

STATE OF CALIFORNIA - DEPARTMENT OF TRANSPORTATION
Caltrans® **PROJECT DEVELOPMENT**

FUNCTIONAL SUPERVISOR: KEVIN ESPINOZA
CALCULATED-DESIGNED BY: CARMEN RODRIGUEZ
CHECKED BY: SHARON WOODBECK
REVISED BY
DATE REVISED

LAST REVISION 04/21/10
DATE PLOTTED => 25-AUG-2010
TIME PLOTTED => 10:04

Dist	COUNTY	ROUTE	POST MILES TOTAL PROJECT	SHEET No.	TOTAL SHEETS
03	Yub	70	R7.0/13.6	32	113

REGISTERED CIVIL ENGINEER 7-26-10 DATE

7-26-10
PLANS APPROVAL DATE

REGISTERED PROFESSIONAL ENGINEER ERIC NORMAN SOUZA No. 75706 Exp. 06-30-12 CIVIL STATE OF CALIFORNIA

THE STATE OF CALIFORNIA OR ITS OFFICERS OR AGENTS SHALL NOT BE RESPONSIBLE FOR THE ACCURACY OR COMPLETENESS OF SCANNED COPIES OF THIS PLAN SHEET.

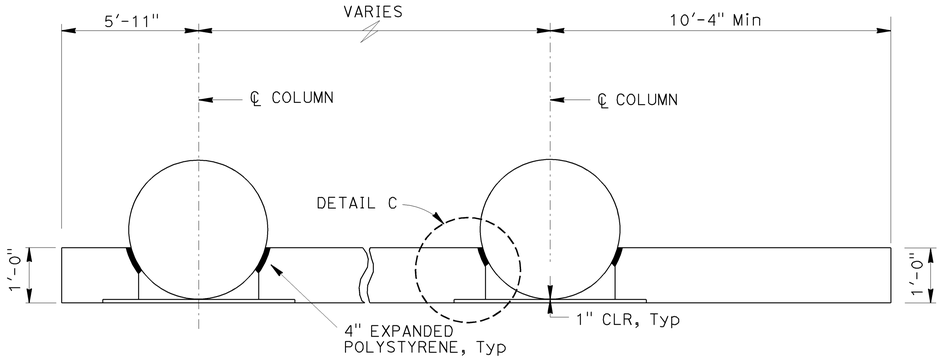

PLAN-CIRCULAR COLUMNS

CONCRETE ANCHOR BLOCK SOUTH MARYSVILLE UC (ROUTE 70 PM R8.88 EB)

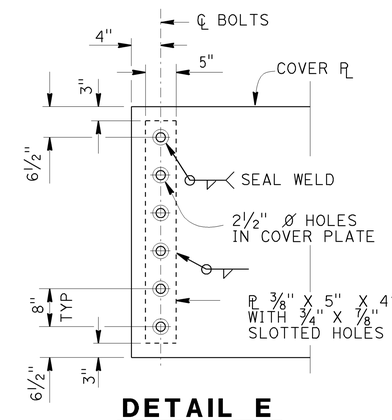

DETAIL E

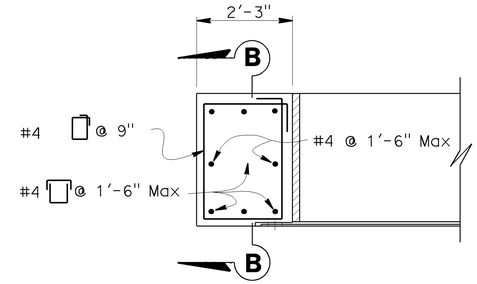

DETAIL D

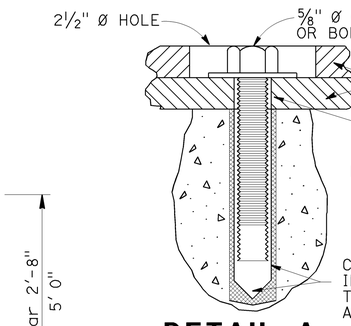

DETAIL A

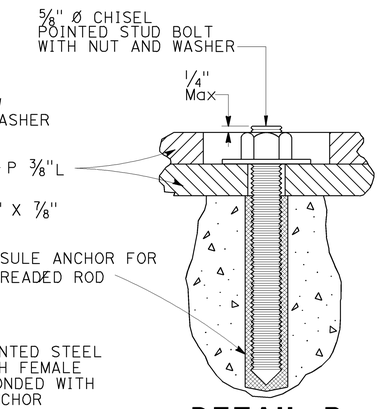

DETAIL B

ALTERNATIVE ANCHORAGE
SEE NOTES 1 AND 2

⅝" Ø RESIN CAPSULE ANCHORAGE ALTERNATIVES (SEE DETAIL A OR B)
A TOTAL OF 12 ANCHORAGE UNITS REQUIRED PER PLATE. ALL MATERIAL PLATES TO BE GALVANIZED AFTER FABRICATION.
HARDWARE TO BE GALVANIZED OR NON-CORROSIVE

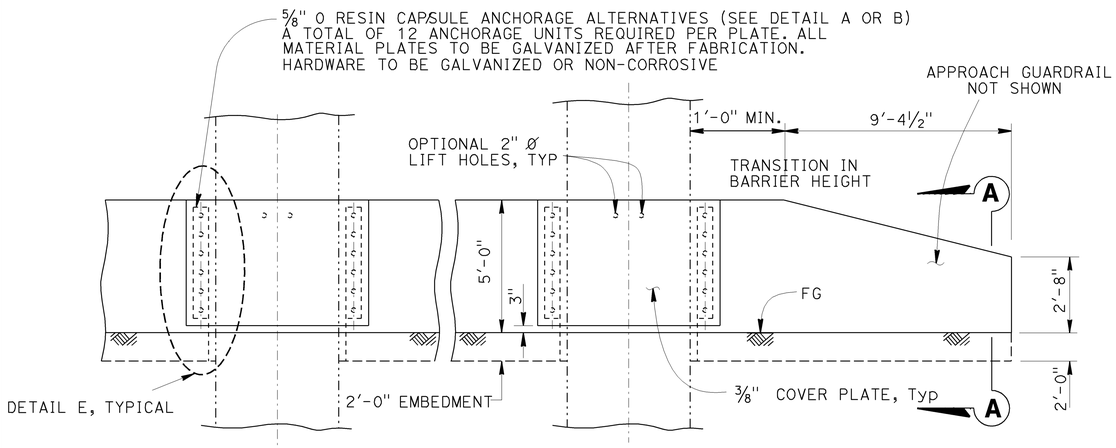

ELEVATION

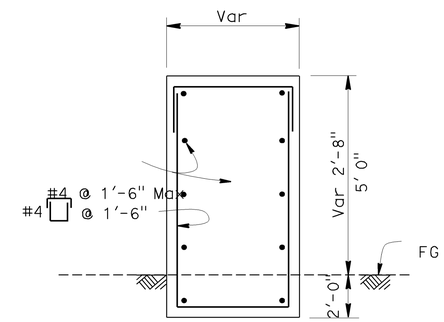

SECTION A-A

NOTES:

1. RESIN CAPSULE ANCHORAGE IS SUBJECT TO APPROVAL OF THE ENGINEER. INSTALLATION PROCEDURES SHALL COMPLY WITH MANUFACTURER'S INSTRUCTIONS.
2. DETAIL B SIMILAR TO DETAIL A EXCEPT FOR ANCHORAGE DEVICES.
3. THE CONTRACTOR SHALL VERIFY ALL CONTROLLED FIELD DIMENSIONS BEFORE ORDERING OR FABRICATING ANY MATERIALS.
4. SEE STD PLAN A77J3 FOR ADDITIONAL DETAILS, INCLUDING RAILING CONNECTION (WITHOUT DOWELS), AND REINFORCING.
5. FOR RAILING CONNECTION DETAILS, SEE RSP A77J4.

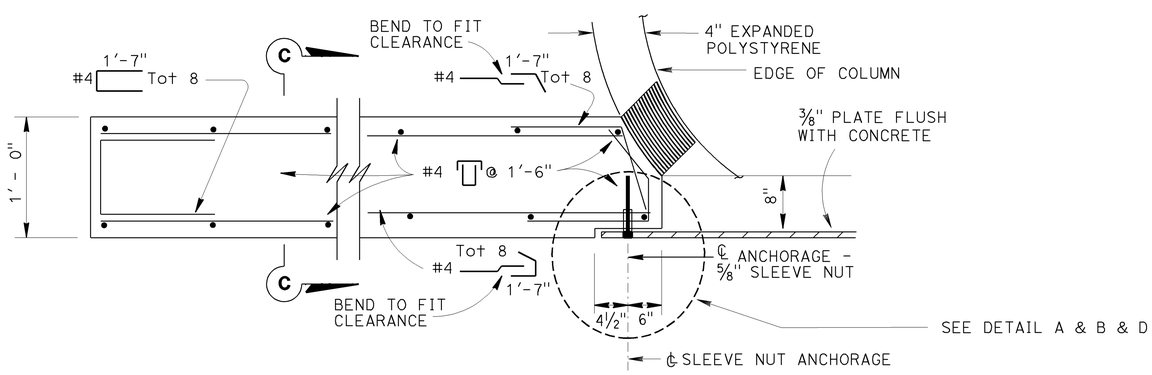

DETAIL C

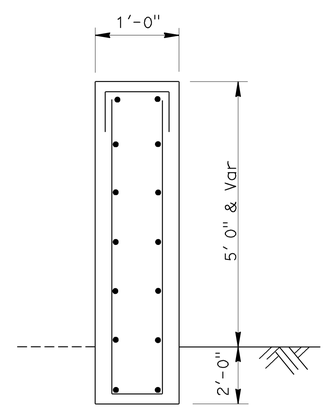

SECTION C-C

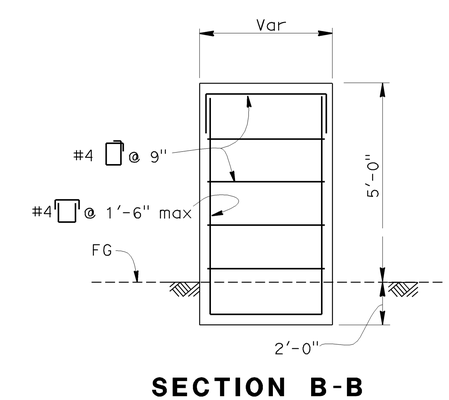

SECTION B-B

CONSTRUCTION DETAILS

NO SCALE

C-24

STATE OF CALIFORNIA - DEPARTMENT OF TRANSPORTATION
Caltrans PROJECT DEVELOPMENT

FUNCTIONAL SUPERVISOR: KEVIN ESPINOZA
CALCULATED-DESIGNED BY: CARMEN RODRIGUEZ
CHECKED BY: ERIC SOUZA
REVISED BY
DATE REVISED

LAST REVISION 04/28/10
DATE PLOTTED => 25-AUG-2010
TIME PLOTTED => 10:04

Dist	COUNTY	ROUTE	POST MILES TOTAL PROJECT	SHEET No.	TOTAL SHEETS
03	Yub	70	R7.0/13.6	33	113

REGISTERED CIVIL ENGINEER 7-26-10 DATE

7-26-10
PLANS APPROVAL DATE

REGISTERED PROFESSIONAL ENGINEER ERIC NORMAN SOUZA No. 75706 Exp. 06-30-12 CIVIL STATE OF CALIFORNIA

THE STATE OF CALIFORNIA OR ITS OFFICERS OR AGENTS SHALL NOT BE RESPONSIBLE FOR THE ACCURACY OR COMPLETENESS OF SCANNED COPIES OF THIS PLAN SHEET.

NOTE:

1. USE THESE POST FOOTINGS ONLY WHERE STANDARD EMBEDMENT OF RAILING POST AS SHOWN IN DETAILS A AND B ON Std PLAN A77C3 IS RESTRICTED BY UNDERGROUND CONCRETE FACILITIES SUCH AS FOOTING OF WALLS, COLUMNS, DRAINAGE FACILITIES, ETC.

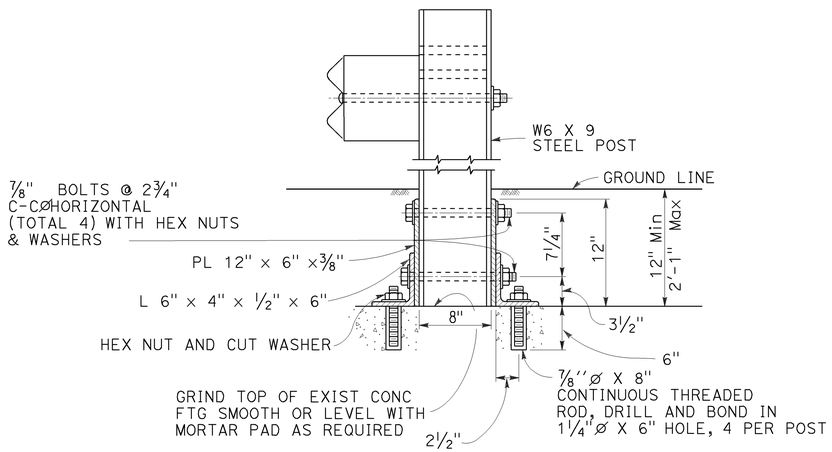

DETAIL C

SEE NOTE 1

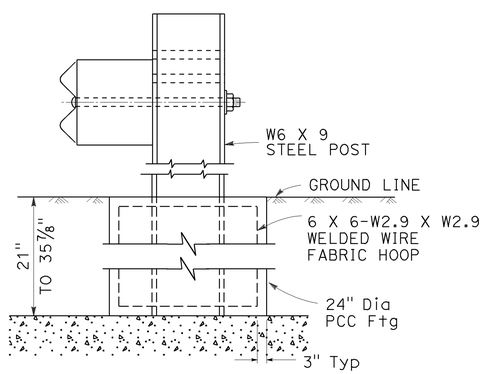

FORM SOCKET IN CONCRETE TO RECEIVE 6" X 8" POST OR PLACE CONCRETE AROUND 6" X 8" POST WRAPPED WITH ONE LAYER OF 1/2" THICK EXPANDED POLYSTYRENE FOAM SHEETING. DO NOT NAIL POLYSTYRENE TO POST. POST TO BE CENTERED IN CONCRETE FOOTING.

DETAIL D

SEE NOTE 1

SPECIAL POST FOOTING DETAIL

LOCATION	ABUTMENT SKEW TO ANCHOR BLOCK
OLIVEHURST OC EB PM R9.28	23°00′
OLIVEHURST OC WB PM R9.29	23°00′

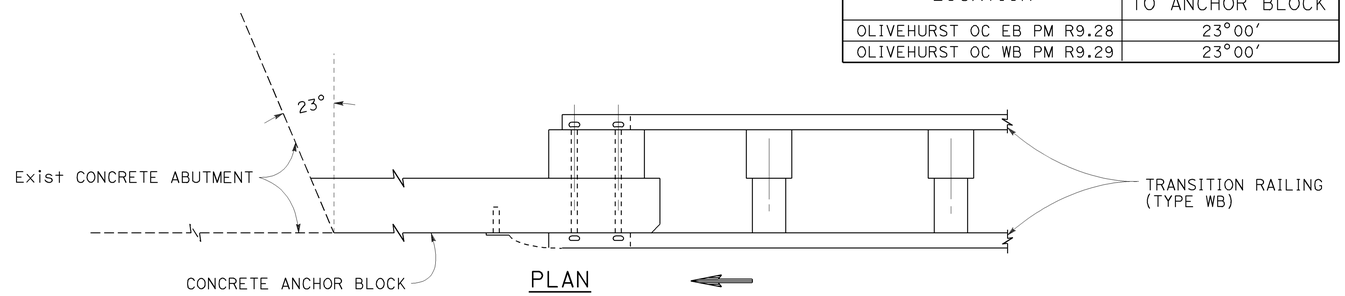

PLAN

NON STANDARD CONCRETE ANCHOR BLOCK

SEE Std PLAN A77J3 AND A77J4 FOR DETAILS NOT SHOWN

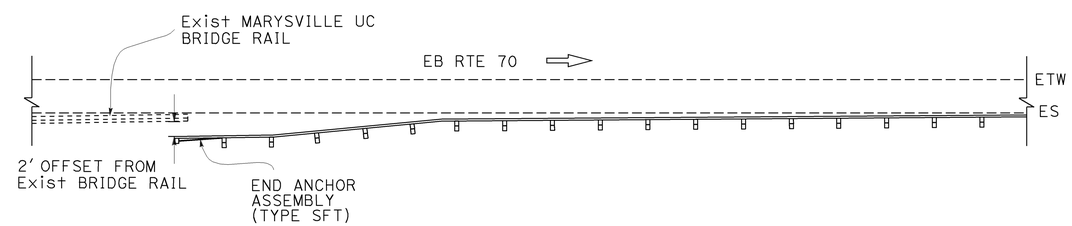

MBGR DETAIL AT SOUTH MARYSVILLE UC (EB RTE 70)

PM 13.23

NOTE: SEE SHEET C-10 FOR COMPLETE GUARDRAIL DESIGN AT THIS LOCATION

CONSTRUCTION DETAILS

NO SCALE

C-25

STATE OF CALIFORNIA - DEPARTMENT OF TRANSPORTATION
Caltrans® PROJECT DEVELOPMENT

FUNCTIONAL SUPERVISOR: KEVIN ESPINOZA
CALCULATED-DESIGNED BY: CARMEN RODRIGUEZ
CHECKED BY: ERIC SOUZA
REVISED BY / DATE REVISED

LAST REVISION 05/03/10
DATE PLOTTED => 25-AUG-2010
TIME PLOTTED => 10:04

Dist	COUNTY	ROUTE	POST MILES TOTAL PROJECT	SHEET No.	TOTAL SHEETS
03	Yub	70	R7.0/13.6	34	113

REGISTERED CIVIL ENGINEER 7-26-10 DATE

7-26-10
PLANS APPROVAL DATE

REGISTERED PROFESSIONAL ENGINEER
ERIC NORMAN SOUZA
No. 75706
Exp. 06-30-12
CIVIL
STATE OF CALIFORNIA

THE STATE OF CALIFORNIA OR ITS OFFICERS OR AGENTS SHALL NOT BE RESPONSIBLE FOR THE ACCURACY OR COMPLETENESS OF SCANNED COPIES OF THIS PLAN SHEET.

NOTES:

1. SHIM WITH TWO 0.62" WASHERS AT EACH BOLT AS NECESSARY. TYPE A - W.
2. REMOVE CONCRETE IN THIS AREA TO FIT PIN HINGE PLATE ADAPTER, AS NECESSARY.
3. FOR DETAILS NOT SHOWN, REFER TO MANUFACTURER'S INSTALLATION MANUAL.

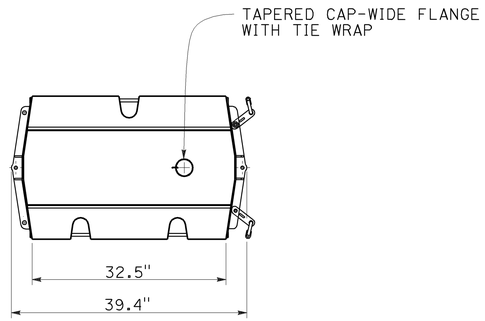

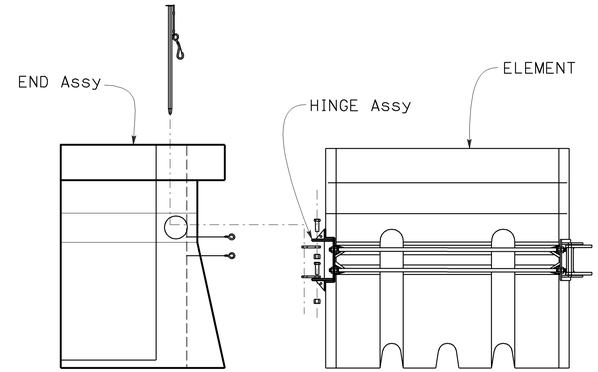

END ASSEMBLY

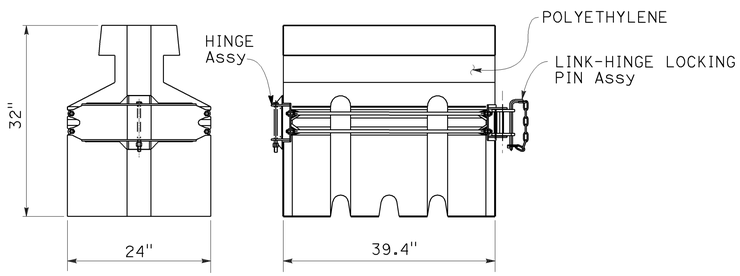

ELEMENT

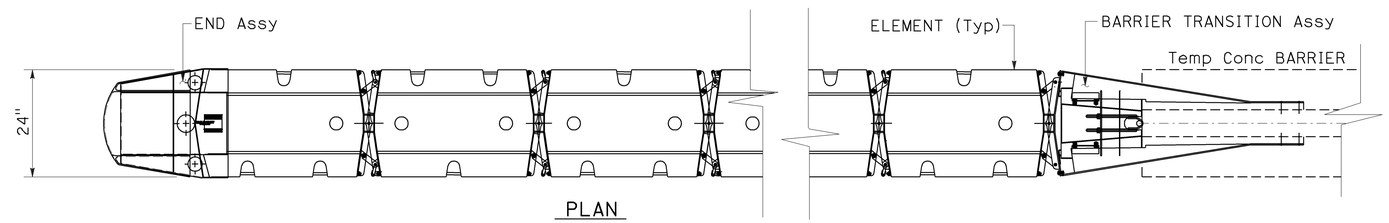

PLAN

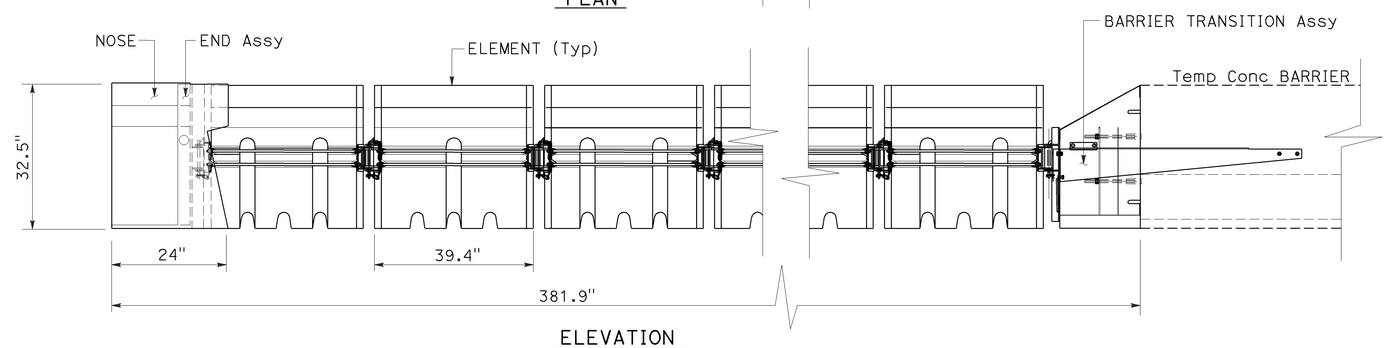

ELEVATION

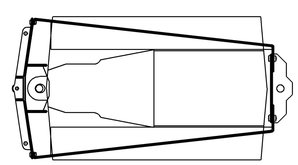

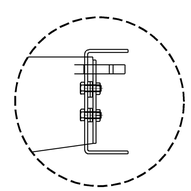

DETAIL A

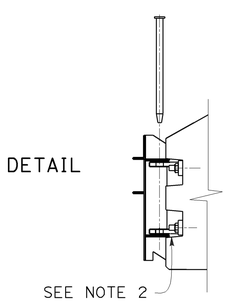

HINGE PIN DETAIL

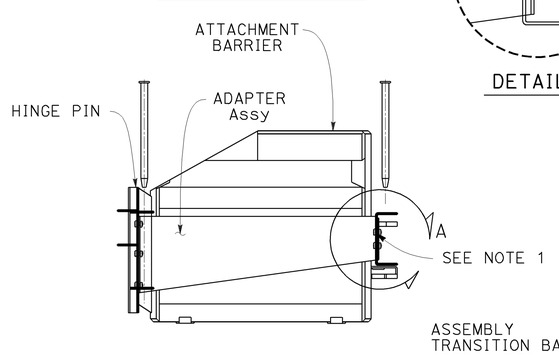

ASSEMBLY
TRANSITION BARRIER
ABSORB 350

BARRIER TRANSITION ASSEMBLY

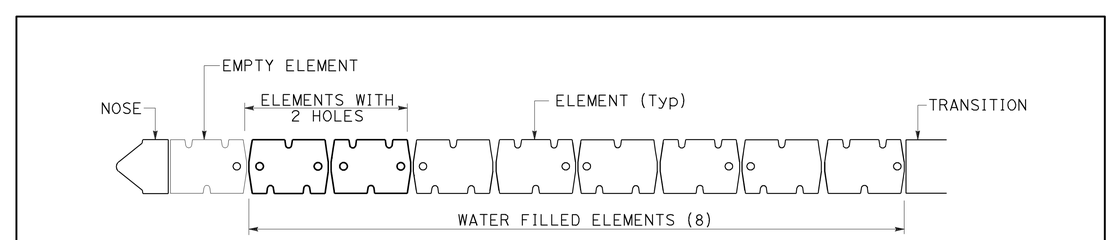

ABSORB 350 SYSTEM CONFIGURATION

TEMPORARY CRASH CUSHION (ABSORB 350) DETAILS

CONSTRUCTION DETAILS

NO SCALE

C-26

STATE OF CALIFORNIA - DEPARTMENT OF TRANSPORTATION
Caltrans® PROJECT DEVELOPMENT

FUNCTIONAL SUPERVISOR: KEVIN ESPINOZA
CALCULATED-DESIGNED BY: JOSE L. VALDEZ
CHECKED BY: ERIC SOUZA
REVISED BY
DATE REVISED

LAST REVISION 04/26/10
DATE PLOTTED => 25-AUG-2010
TIME PLOTTED => 10:04

Dist	COUNTY	ROUTE	POST MILES TOTAL PROJECT	SHEET No.	TOTAL SHEETS
03	Yub	70	R7.0/13.6	35	113

REGISTERED CIVIL ENGINEER 7-26-10 DATE

7-26-10
PLANS APPROVAL DATE

REGISTERED PROFESSIONAL ENGINEER J. A. HUERTA No. 59506 Exp. 12-31-12 CIVIL STATE OF CALIFORNIA

THE STATE OF CALIFORNIA OR ITS OFFICERS OR AGENTS SHALL NOT BE RESPONSIBLE FOR THE ACCURACY OR COMPLETENESS OF SCANNED COPIES OF THIS PLAN SHEET.

NOTE:

FOR DETAILS NOT SHOWN, SEE Std PLANS AND OVERHEAD SIGN PLANS.

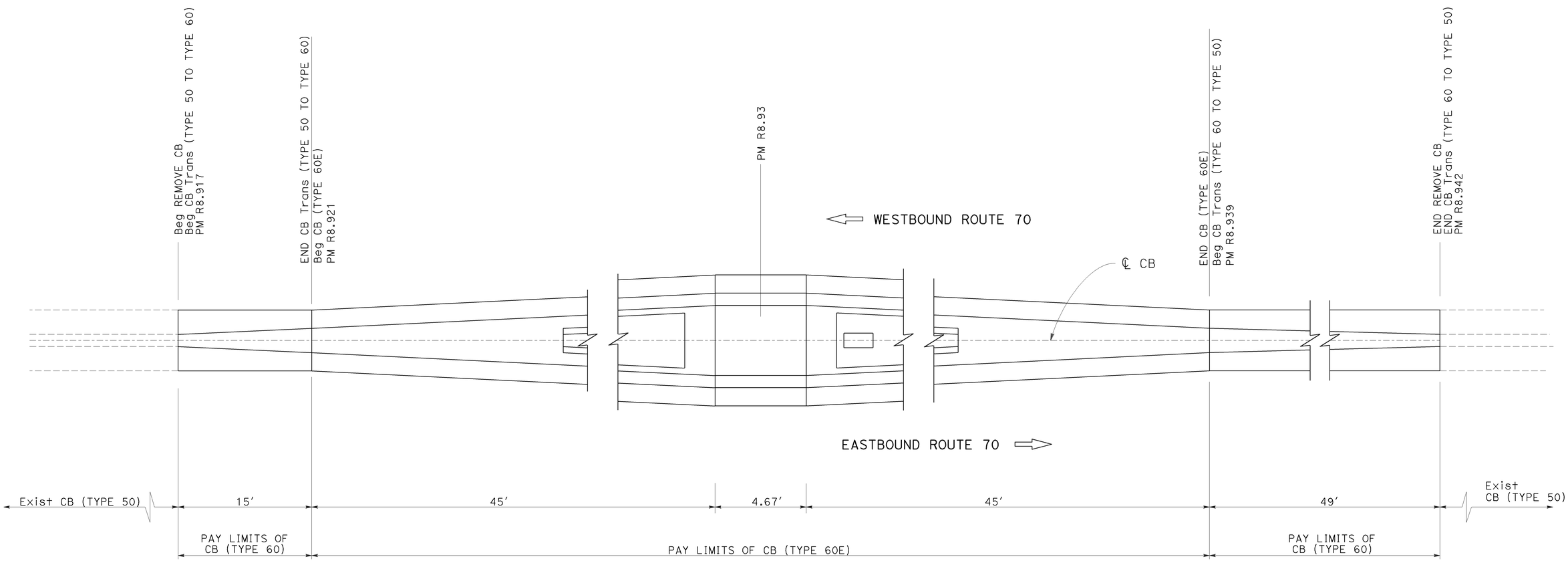

CONCRETE BARRIER TRANSITIONS AT OVERHEAD SIGN PEDESTAL PM R8.93

CONSTRUCTION DETAILS

NO SCALE

C-27

STATE OF CALIFORNIA - DEPARTMENT OF TRANSPORTATION
Caltrans® PROJECT DEVELOPMENT

FUNCTIONAL SUPERVISOR: KEVIN ESPINOZA
CALCULATED-DESIGNED BY: J. A. HUERTA
CHECKED BY: MIKE PANCHESSON
REVISED BY
DATE REVISED

LAST REVISION DATE PLOTTED => 25-AUG-2010
04/28/10 TIME PLOTTED => 10:04

Dist	COUNTY	ROUTE	POST MILES TOTAL PROJECT	SHEET No.	TOTAL SHEETS
03	Yub	70	R7.0/13.6	36	113

REGISTERED CIVIL ENGINEER 7-26-10 DATE

7-26-10
PLANS APPROVAL DATE

REGISTERED PROFESSIONAL ENGINEER
ERIC NORMAN SOUZA
No. 75706
Exp. 06-30-12
CIVIL
STATE OF CALIFORNIA

THE STATE OF CALIFORNIA OR ITS OFFICERS OR AGENTS SHALL NOT BE RESPONSIBLE FOR THE ACCURACY OR COMPLETENESS OF SCANNED COPIES OF THIS PLAN SHEET.

LEGEND

EROSION CONTROL (HYDROSEED)

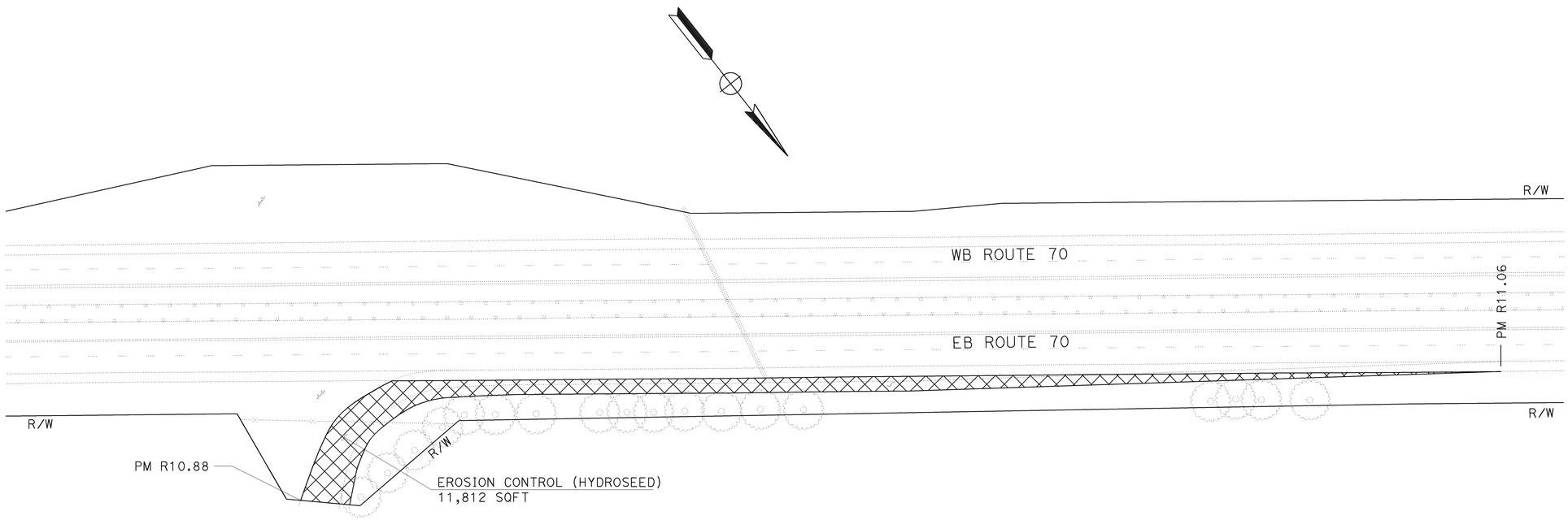

EROSION CONTROL PLAN

SCALE: 1" = 50'

EC-1

REVISED BY	DATE REVISED

CALCULATED-DESIGNED BY	CHECKED BY
JOSE L. VALDEZ	ERIC SOUZA

FUNCTIONAL SUPERVISOR: KEVIN ESPINOZA

STATE OF CALIFORNIA - DEPARTMENT OF TRANSPORTATION
Caltrans® PROJECT DEVELOPMENT

LAST REVISION 04/30/10
DATE PLOTTED => 25-AUG-2010
TIME PLOTTED => 10:04

Dist	COUNTY	ROUTE	POST MILES TOTAL PROJECT	SHEET No.	TOTAL SHEETS
03	Yub	70	R7.0/13.6	37	113

REGISTERED CIVIL ENGINEER 7-26-10 DATE

7-26-10
PLANS APPROVAL DATE

REGISTERED PROFESSIONAL ENGINEER
ERIC NORMAN SOUZA
No. 75706
Exp. 06-30-12
CIVIL
STATE OF CALIFORNIA

THE STATE OF CALIFORNIA OR ITS OFFICERS OR AGENTS SHALL NOT BE RESPONSIBLE FOR THE ACCURACY OR COMPLETENESS OF SCANNED COPIES OF THIS PLAN SHEET.

NOTES:

LEGEND

EROSION CONTROL (HYDROSEED)

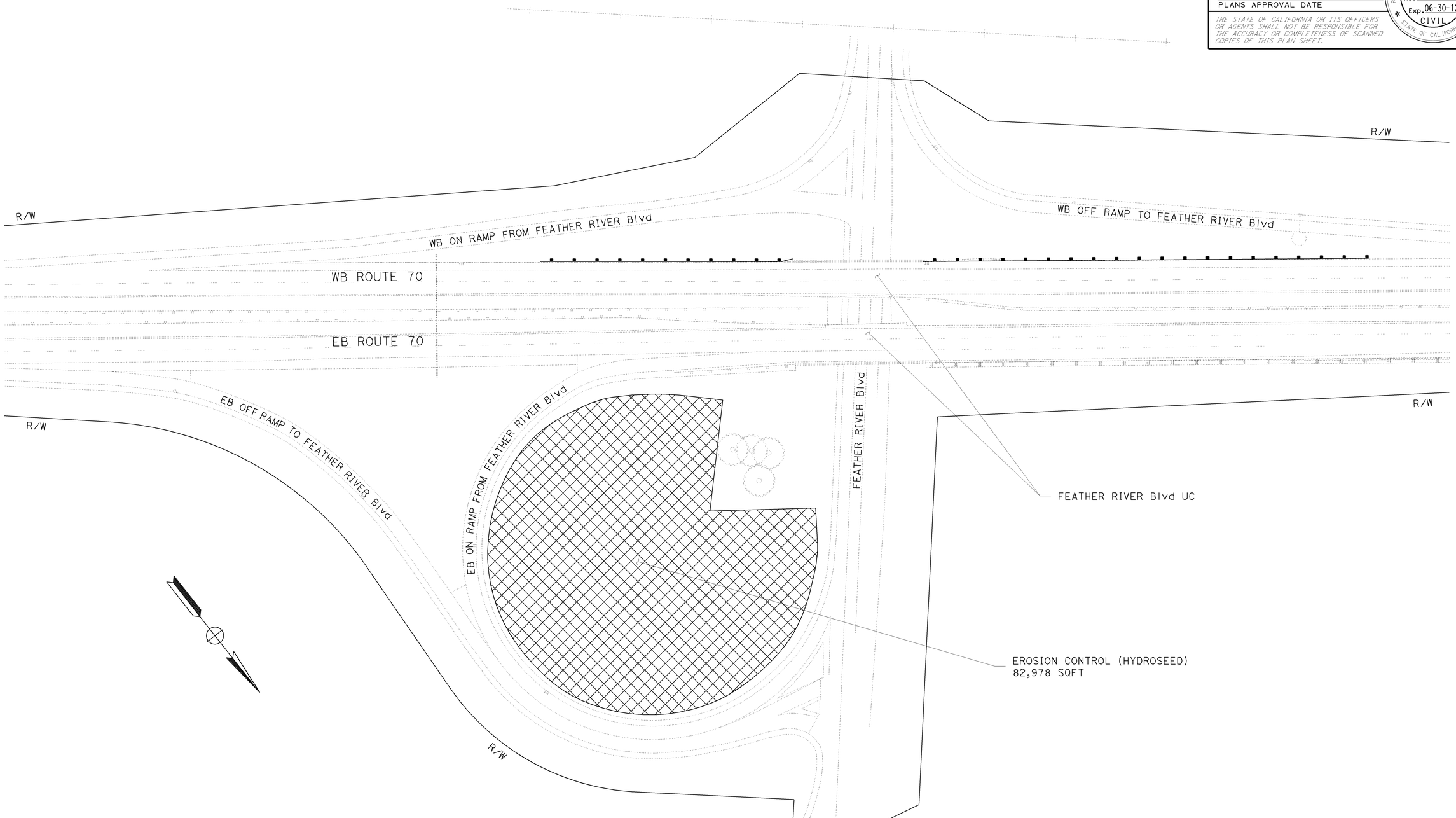

EROSION CONTROL PLAN

SCALE: 1" = 50'

EC-2

STATE OF CALIFORNIA - DEPARTMENT OF TRANSPORTATION
Caltrans
PROJECT DEVELOPMENT

FUNCTIONAL SUPERVISOR: KEVIN ESPINOZA
CALCULATED-DESIGNED BY: JOSE L. VALDEZ
CHECKED BY: ERIC SOUZA
REVISED BY
DATE REVISED

LAST REVISION 04/30/10
DATE PLOTTED => 25-AUG-2010
TIME PLOTTED => 10:04

Dist	COUNTY	ROUTE	POST MILES TOTAL PROJECT	SHEET No.	TOTAL SHEETS
03	Yub	70	R7.0/13.6	38	113

REGISTERED CIVIL ENGINEER 7-26-10 DATE

7-26-10
PLANS APPROVAL DATE

REGISTERED PROFESSIONAL ENGINEER
ERIC NORMAN SOUZA
No. 75706
Exp. 06-30-12
CIVIL
STATE OF CALIFORNIA

THE STATE OF CALIFORNIA OR ITS OFFICERS OR AGENTS SHALL NOT BE RESPONSIBLE FOR THE ACCURACY OR COMPLETENESS OF SCANNED COPIES OF THIS PLAN SHEET.

NOTES:

EROSION CONTROL (HYDROSEED)

SHEET NUMBER	SQFT
EC-1	11,812
EC-2	82,978
TOTAL	94,790

EROSION CONTROL QUANTITIES
ECQ-1

REVISED BY | DATE REVISED
JOSE L. VALDEZ | ERIC SOUZA
CALCULATED-DESIGNED BY | CHECKED BY
FUNCTIONAL SUPERVISOR
KEVIN ESPINOZA

STATE OF CALIFORNIA - DEPARTMENT OF TRANSPORTATION
Caltrans PROJECT DEVELOPMENT

LAST REVISION 05/03/10 | DATE PLOTTED => 25-AUG-2010 | TIME PLOTTED => 10:04

Dist	COUNTY	ROUTE	POST MILES TOTAL PROJECT	SHEET No.	TOTAL SHEETS
03	Yub	70	R7.0/13.6	39	113

REGISTERED CIVIL ENGINEER 7-26-10 DATE

7-26-10
PLANS APPROVAL DATE

REGISTERED PROFESSIONAL ENGINEER PATRICK BISHOP No. 59860 Exp. 12-31-11 CIVIL STATE OF CALIFORNIA

THE STATE OF CALIFORNIA OR ITS OFFICERS OR AGENTS SHALL NOT BE RESPONSIBLE FOR THE ACCURACY OR COMPLETENESS OF SCANNED COPIES OF THIS PLAN SHEET.

NOTES:

1. FOR ACCURATE RIGHT OF WAY DATA, CONTACT RIGHT OF WAY ENGINEERING AT DISTRICT OFFICE.

2. CALIFORNIA COORDINATE SYSTEM, ZONE: 2, HORIZ DATUM: NAD 83, VERT DATUM: NGVD 29.

LEGEND

UTILITIES	SYMBOL	OWNERSHIP
WATER	—— w —— w ——	LINDA COUNTY WATER DISTRICT, OLIVEHURST PUBLIC UTILITY DISTRICT
ELECTRIC	—— e —— e ——	PG&E
GAS	—— g —— g ——	PG&E
TELEPHONE	—— t —— t ——	AT&T
SEWER	—— s —— s ——	LINDA COUNTY WATER DISTRICT
TELEVISION	—— tv —— tv ——	COMCAST

POTHOLE LOCATION

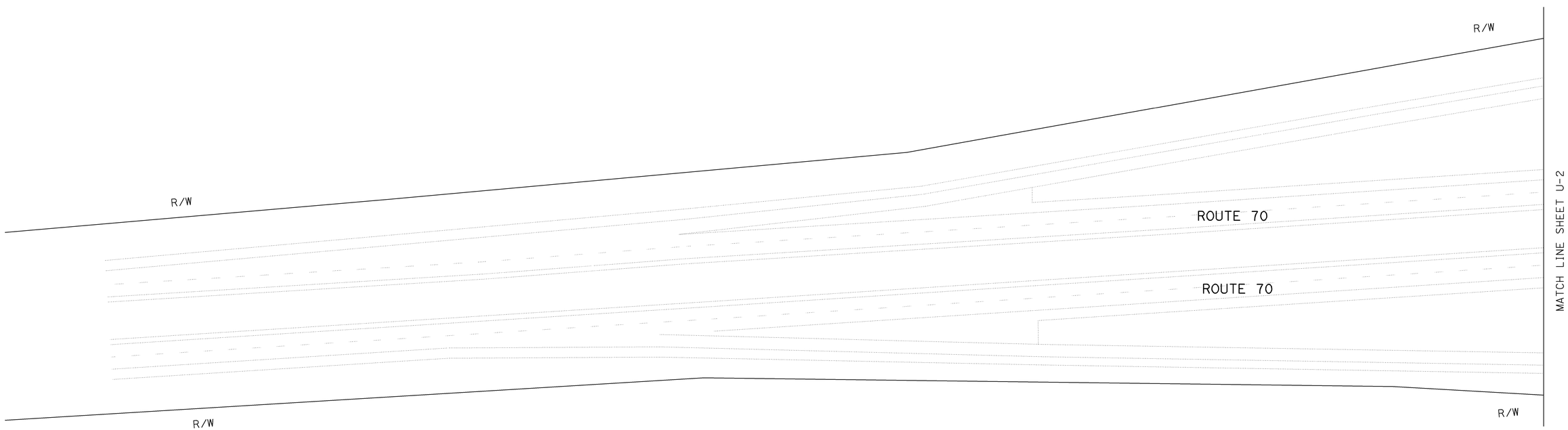

UTILITY PLAN

SCALE: 1" = 50'

U-1

STATE OF CALIFORNIA - DEPARTMENT OF TRANSPORTATION
Caltrans PROJECT DEVELOPMENT

FUNCTIONAL SUPERVISOR: THOMAS BRANNON

CALCULATED-DESIGNED BY: OLAWALE AJAYI
CHECKED BY: PATRICK BISHOP

REVISED BY
DATE REVISED

LAST REVISION 07-26-10
DATE PLOTTED => 25-AUG-2010
TIME PLOTTED => 10:04

Dist	COUNTY	ROUTE	POST MILES TOTAL PROJECT	SHEET No.	TOTAL SHEETS
03	Yub	70	R7.0/13.6	40	113

REGISTERED CIVIL ENGINEER 7-26-10 DATE

7-26-10
PLANS APPROVAL DATE

REGISTERED PROFESSIONAL ENGINEER
PATRICK BISHOP
No. 59860
Exp. 12-31-11
CIVIL
STATE OF CALIFORNIA

THE STATE OF CALIFORNIA OR ITS OFFICERS OR AGENTS SHALL NOT BE RESPONSIBLE FOR THE ACCURACY OR COMPLETENESS OF SCANNED COPIES OF THIS PLAN SHEET.

NOTES:

1. FOR ACCURATE RIGHT OF WAY DATA, CONTACT RIGHT OF WAY ENGINEERING AT DISTRICT OFFICE.

2. CALIFORNIA COORDINATE SYSTEM, ZONE: 2, HORIZ DATUM: NAD 83, VERT DATUM: NGVD 29.

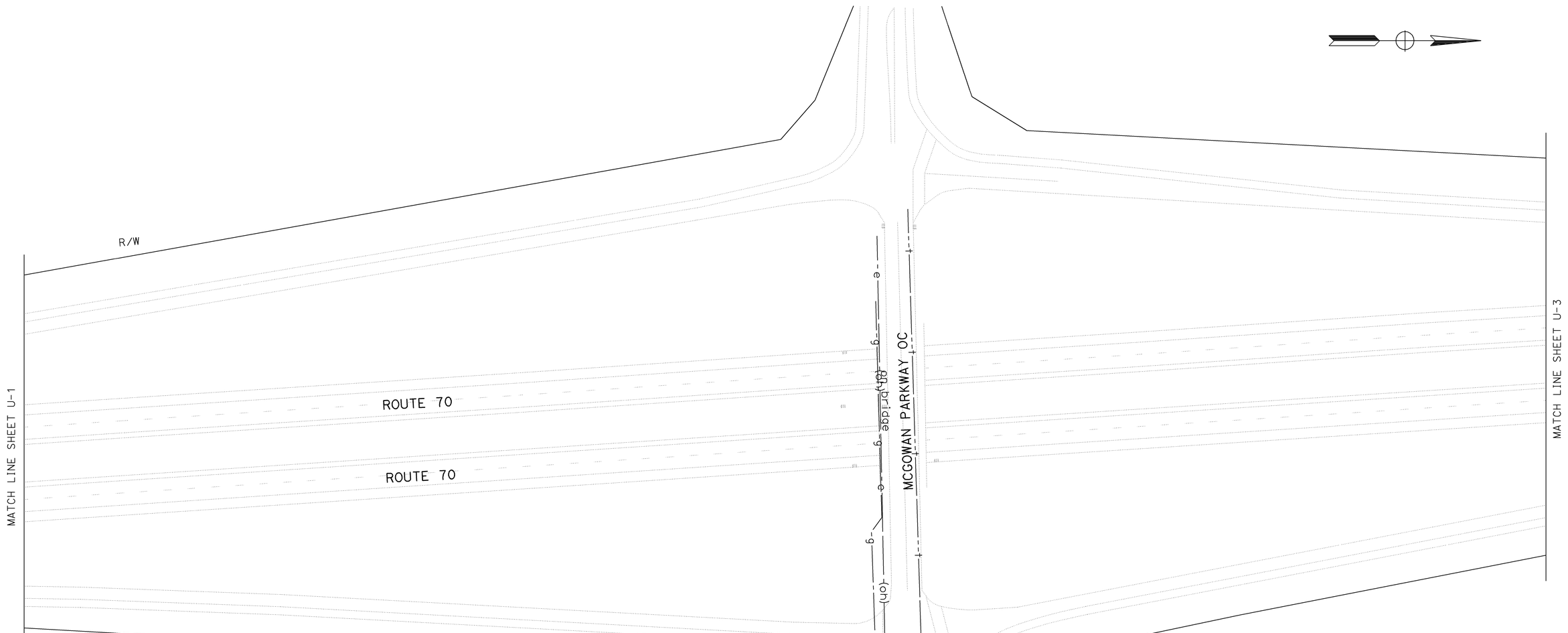

UTILITY PLAN

SCALE: 1" = 50'

U-2

REVISED BY | DATE REVISED

OLAWALE AJAYI | PATRICK BISHOP

CALCULATED-DESIGNED BY | CHECKED BY

FUNCTIONAL SUPERVISOR: THOMAS BRANNON

STATE OF CALIFORNIA - DEPARTMENT OF TRANSPORTATION
Caltrans® PROJECT DEVELOPMENT

LAST REVISION 07-26-10 | DATE PLOTTED => 25-AUG-2010 | TIME PLOTTED => 10:04

Dist	COUNTY	ROUTE	POST MILES TOTAL PROJECT	SHEET No.	TOTAL SHEETS
03	Yub	70	R7.0/13.6	41	113

REGISTERED CIVIL ENGINEER 7-26-10 DATE

7-26-10
PLANS APPROVAL DATE

REGISTERED PROFESSIONAL ENGINEER
PATRICK BISHOP
No. 59860
Exp. 12-31-11
CIVIL
STATE OF CALIFORNIA

THE STATE OF CALIFORNIA OR ITS OFFICERS OR AGENTS SHALL NOT BE RESPONSIBLE FOR THE ACCURACY OR COMPLETENESS OF SCANNED COPIES OF THIS PLAN SHEET.

NOTES:

1. FOR ACCURATE RIGHT OF WAY DATA, CONTACT RIGHT OF WAY ENGINEERING AT DISTRICT OFFICE.

2. CALIFORNIA COORDINATE SYSTEM, ZONE: 2, HORIZ DATUM: NAD 83, VERT DATUM: NGVD 29.

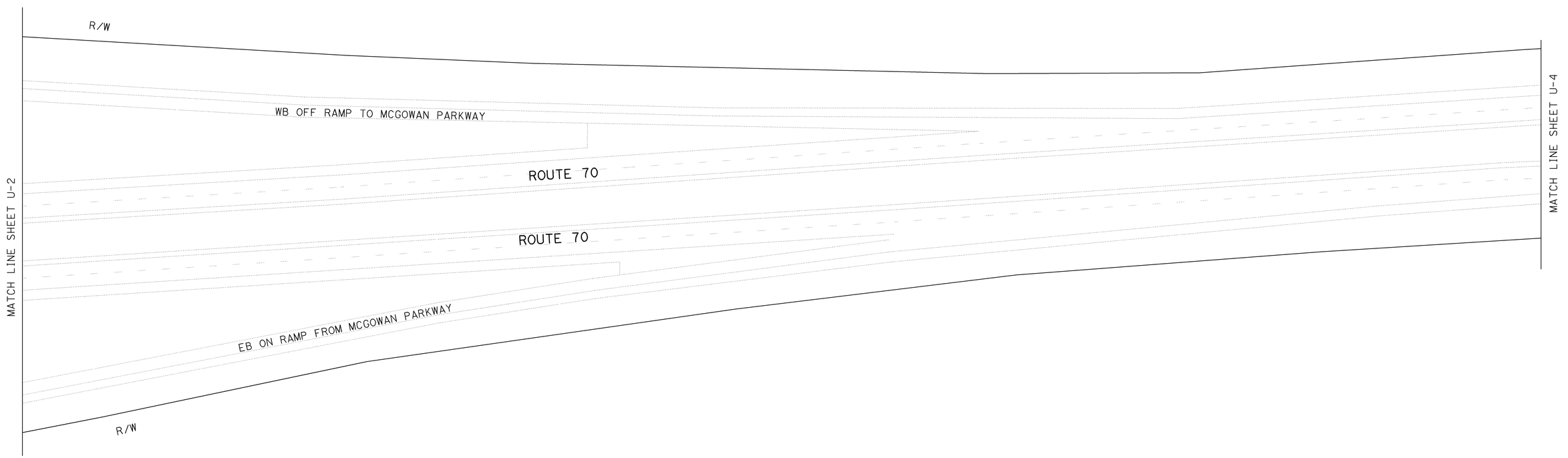

UTILITY PLAN

SCALE: 1" = 50'

U-3

REVISED BY
DATE REVISED

OLAWALE AJAYI
PATRICK BISHOP

CALCULATED-DESIGNED BY
CHECKED BY

FUNCTIONAL SUPERVISOR
THOMAS BRANNON

STATE OF CALIFORNIA - DEPARTMENT OF TRANSPORTATION
Caltrans PROJECT DEVELOPMENT

LAST REVISION 07-26-10
DATE PLOTTED => 25-AUG-2010
TIME PLOTTED => 10:04

Dist	COUNTY	ROUTE	POST MILES TOTAL PROJECT	SHEET No.	TOTAL SHEETS
03	Yub	70	R7.0/13.6	42	113

REGISTERED CIVIL ENGINEER 7-26-10 DATE

7-26-10
PLANS APPROVAL DATE

REGISTERED PROFESSIONAL ENGINEER
PATRICK BISHOP
No. 59860
Exp. 12-31-11
CIVIL
STATE OF CALIFORNIA

THE STATE OF CALIFORNIA OR ITS OFFICERS OR AGENTS SHALL NOT BE RESPONSIBLE FOR THE ACCURACY OR COMPLETENESS OF SCANNED COPIES OF THIS PLAN SHEET.

NOTES:

1. FOR ACCURATE RIGHT OF WAY DATA, CONTACT RIGHT OF WAY ENGINEERING AT DISTRICT OFFICE.

2. CALIFORNIA COORDINATE SYSTEM, ZONE: 2, HORIZ DATUM: NAD 83, VERT DATUM: NGVD 29.

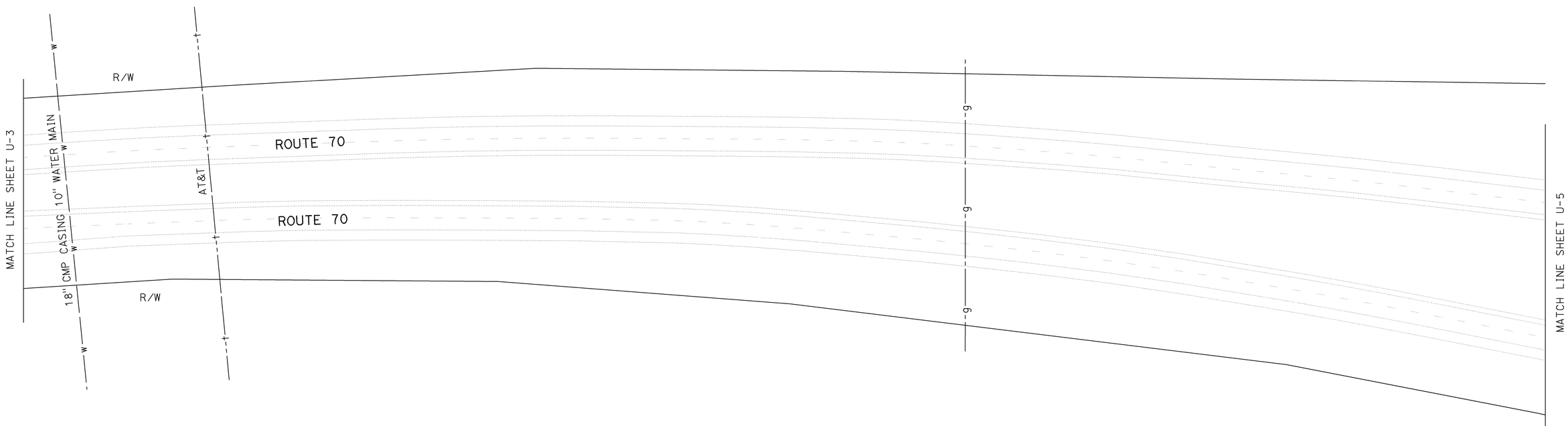

UTILITY PLAN

SCALE: 1" = 50'

U-4

REVISED BY | DATE REVISED
OLAWALE AJAYI | PATRICK BISHOP
CALCULATED-DESIGNED BY | CHECKED BY
FUNCTIONAL SUPERVISOR | THOMAS BRANNON

STATE OF CALIFORNIA - DEPARTMENT OF TRANSPORTATION
Caltrans® PROJECT DEVELOPMENT

LAST REVISION 07-26-10 | DATE PLOTTED => 25-AUG-2010 | TIME PLOTTED => 10:04

Dist	COUNTY	ROUTE	POST MILES TOTAL PROJECT	SHEET No.	TOTAL SHEETS
03	Yub	70	R7.0/13.6	43	113

REGISTERED CIVIL ENGINEER 7-26-10 DATE

7-26-10
PLANS APPROVAL DATE

REGISTERED PROFESSIONAL ENGINEER
PATRICK BISHOP
No. 59860
Exp. 12-31-11
CIVIL
STATE OF CALIFORNIA

THE STATE OF CALIFORNIA OR ITS OFFICERS OR AGENTS SHALL NOT BE RESPONSIBLE FOR THE ACCURACY OR COMPLETENESS OF SCANNED COPIES OF THIS PLAN SHEET.

NOTES:

1. FOR ACCURATE RIGHT OF WAY DATA, CONTACT RIGHT OF WAY ENGINEERING AT DISTRICT OFFICE.

2. CALIFORNIA COORDINATE SYSTEM, ZONE: 2, HORIZ DATUM: NAD 83, VERT DATUM: NGVD 29.

UTILITY PLAN

SCALE: 1" = 50'

U- 5

REVISED BY
DATE REVISED

OLAWALE AJAYI
PATRICK BISHOP

CALCULATED-DESIGNED BY
CHECKED BY

FUNCTIONAL SUPERVISOR
THOMAS BRANNON

STATE OF CALIFORNIA - DEPARTMENT OF TRANSPORTATION
Caltrans
PROJECT DEVELOPMENT

LAST REVISION 07-26-10
DATE PLOTTED => 25-AUG-2010
TIME PLOTTED => 10:04

Dist	COUNTY	ROUTE	POST MILES TOTAL PROJECT	SHEET No.	TOTAL SHEETS
03	Yub	70	R7.0/13.6	44	113

REGISTERED CIVIL ENGINEER 7-26-10 DATE

7-26-10
PLANS APPROVAL DATE

REGISTERED PROFESSIONAL ENGINEER PATRICK BISHOP No. 59860 Exp. 12-31-11 CIVIL STATE OF CALIFORNIA

THE STATE OF CALIFORNIA OR ITS OFFICERS OR AGENTS SHALL NOT BE RESPONSIBLE FOR THE ACCURACY OR COMPLETENESS OF SCANNED COPIES OF THIS PLAN SHEET.

NOTES:

1. FOR ACCURATE RIGHT OF WAY DATA, CONTACT RIGHT OF WAY ENGINEERING AT DISTRICT OFFICE.

2. CALIFORNIA COORDINATE SYSTEM, ZONE: 2, HORIZ DATUM: NAD 83, VERT DATUM: NGVD 29.

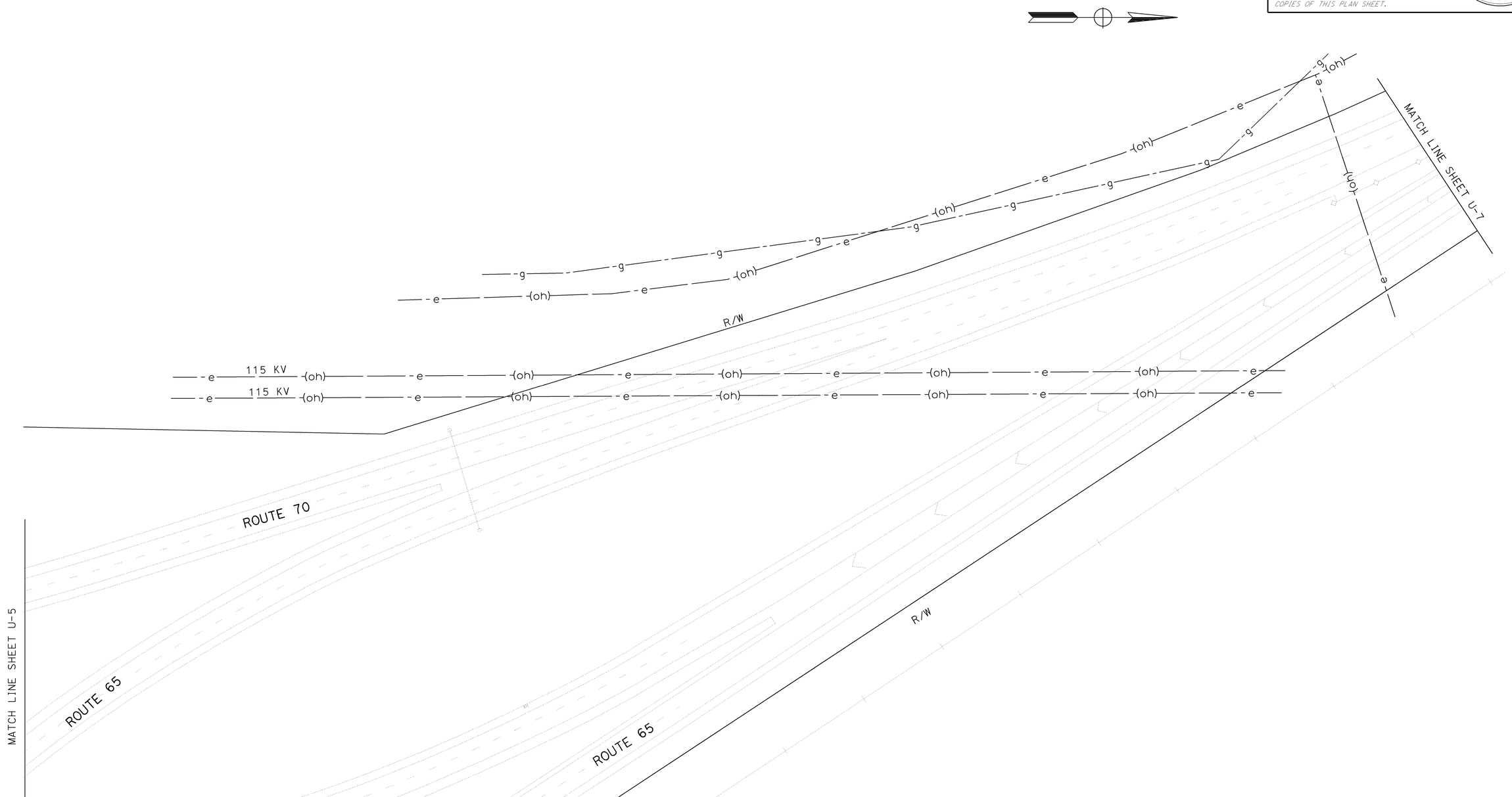

UTILITY PLAN

SCALE: 1" = 50'

U-6

STATE OF CALIFORNIA - DEPARTMENT OF TRANSPORTATION
Caltrans PROJECT DEVELOPMENT

FUNCTIONAL SUPERVISOR: THOMAS BRANNON
CALCULATED-DESIGNED BY: OLAWALE AJAYI
CHECKED BY: PATRICK BISHOP
REVISED BY
DATE REVISED

LAST REVISION 07-26-10
DATE PLOTTED => 25-AUG-2010
TIME PLOTTED => 10:05

Dist	COUNTY	ROUTE	POST MILES TOTAL PROJECT	SHEET No.	TOTAL SHEETS
03	Yub	70	R7.0/13.6	45	113

REGISTERED CIVIL ENGINEER 7-26-10 DATE

7-26-10
PLANS APPROVAL DATE

REGISTERED PROFESSIONAL ENGINEER PATRICK BISHOP No. 59860 Exp. 12-31-11 CIVIL STATE OF CALIFORNIA

THE STATE OF CALIFORNIA OR ITS OFFICERS OR AGENTS SHALL NOT BE RESPONSIBLE FOR THE ACCURACY OR COMPLETENESS OF SCANNED COPIES OF THIS PLAN SHEET.

NOTES:

1. FOR ACCURATE RIGHT OF WAY DATA, CONTACT RIGHT OF WAY ENGINEERING AT DISTRICT OFFICE.

2. CALIFORNIA COORDINATE SYSTEM, ZONE: 2, HORIZ DATUM: NAD 83, VERT DATUM: NGVD 29.

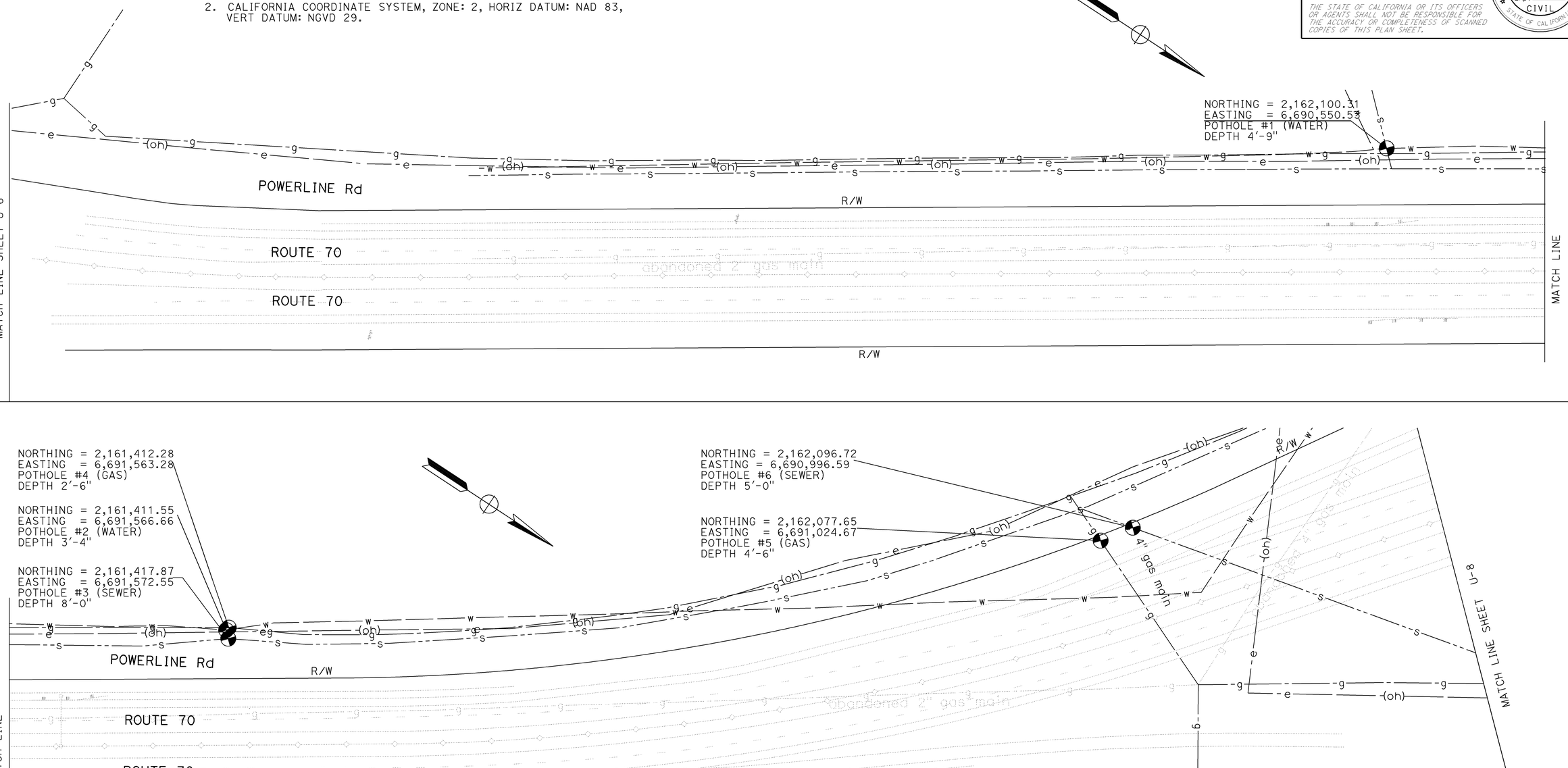

UTILITY PLAN

SCALE: 1" = 50'

U-7

STATE OF CALIFORNIA - DEPARTMENT OF TRANSPORTATION
Caltrans PROJECT DEVELOPMENT

FUNCTIONAL SUPERVISOR: THOMAS BRANNON
CALCULATED-DESIGNED BY: OLAWALE AJAYI
CHECKED BY: PATRICK BISHOP
REVISED BY
DATE REVISED

LAST REVISION 07-26-10
DATE PLOTTED => 25-AUG-2010
TIME PLOTTED => 10:05

Dist	COUNTY	ROUTE	POST MILES TOTAL PROJECT	SHEET No.	TOTAL SHEETS
03	Yub	70	R7.0/13.6	46	113

REGISTERED CIVIL ENGINEER 7-26-10 DATE

7-26-10
PLANS APPROVAL DATE

REGISTERED PROFESSIONAL ENGINEER PATRICK BISHOP No. 59860 Exp. 12-31-11 CIVIL STATE OF CALIFORNIA

THE STATE OF CALIFORNIA OR ITS OFFICERS OR AGENTS SHALL NOT BE RESPONSIBLE FOR THE ACCURACY OR COMPLETENESS OF SCANNED COPIES OF THIS PLAN SHEET.

NOTES:

1. FOR ACCURATE RIGHT OF WAY DATA, CONTACT RIGHT OF WAY ENGINEERING AT DISTRICT OFFICE.
2. CALIFORNIA COORDINATE SYSTEM, ZONE: 2, HORIZ DATUM: NAD 83, VERT DATUM: NGVD 29.

UTILITY PLAN

SCALE: 1" = 50'

U-8

STATE OF CALIFORNIA - DEPARTMENT OF TRANSPORTATION
Caltrans PROJECT DEVELOPMENT

FUNCTIONAL SUPERVISOR: THOMAS BRANNON
CALCULATED-DESIGNED BY: OLAWALE AJAYI
CHECKED BY: PATRICK BISHOP
REVISED BY
DATE REVISED

LAST REVISION 07-26-10
DATE PLOTTED => 25-AUG-2010
TIME PLOTTED => 10:05

Dist	COUNTY	ROUTE	POST MILES TOTAL PROJECT	SHEET No.	TOTAL SHEETS
03	Yub	70	R7.0/13.6	47	113

Patrick D. Bishop 7-26-10
REGISTERED CIVIL ENGINEER DATE

7-26-10
PLANS APPROVAL DATE

REGISTERED PROFESSIONAL ENGINEER
PATRICK BISHOP
No. 59860
Exp. 12-31-11
CIVIL
STATE OF CALIFORNIA

THE STATE OF CALIFORNIA OR ITS OFFICERS OR AGENTS SHALL NOT BE RESPONSIBLE FOR THE ACCURACY OR COMPLETENESS OF SCANNED COPIES OF THIS PLAN SHEET.

NOTES:

1. FOR ACCURATE RIGHT OF WAY DATA, CONTACT RIGHT OF WAY ENGINEERING AT DISTRICT OFFICE.
2. CALIFORNIA COORDINATE SYSTEM, ZONE: 2, HORIZ DATUM: NAD 83, VERT DATUM: NGVD 29.

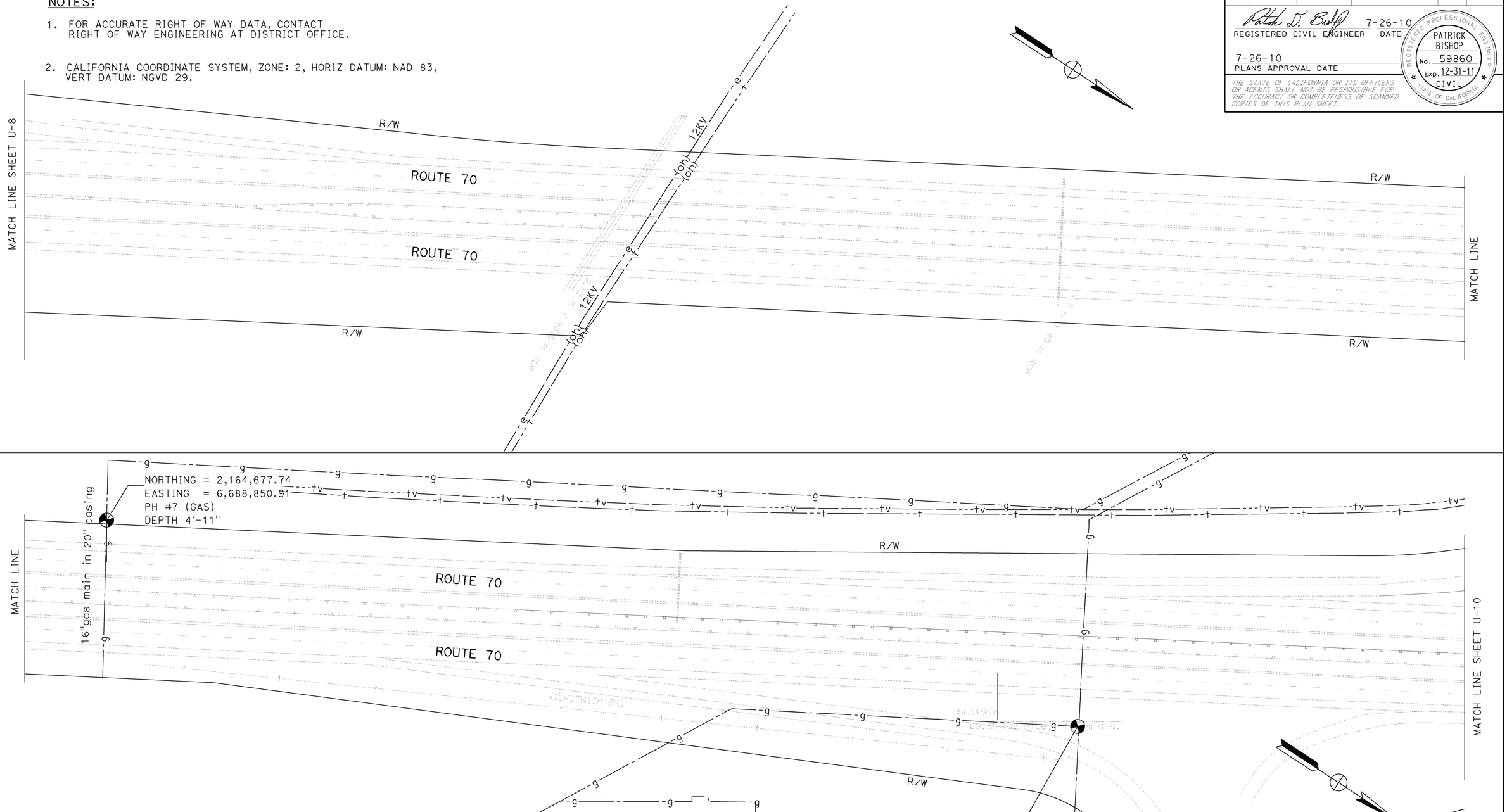

UTILITY PLAN

SCALE: 1" = 50'

U-9

STATE OF CALIFORNIA - DEPARTMENT OF TRANSPORTATION
Caltrans PROJECT DEVELOPMENT

FUNCTIONAL SUPERVISOR: THOMAS BRANNON
CALCULATED-DESIGNED BY: OLAWALE AJAYI
CHECKED BY: PATRICK BISHOP
REVISED BY / DATE REVISED

LAST REVISION 07-26-10 | DATE PLOTTED => 25-AUG-2010 | TIME PLOTTED => 10:05

Dist	COUNTY	ROUTE	POST MILES TOTAL PROJECT	SHEET No.	TOTAL SHEETS
03	Yub	70	R7.0/13.6	48	113

REGISTERED CIVIL ENGINEER 7-26-10 DATE

7-26-10
PLANS APPROVAL DATE

REGISTERED PROFESSIONAL ENGINEER PATRICK BISHOP No. 59860 Exp. 12-31-11 CIVIL STATE OF CALIFORNIA

THE STATE OF CALIFORNIA OR ITS OFFICERS OR AGENTS SHALL NOT BE RESPONSIBLE FOR THE ACCURACY OR COMPLETENESS OF SCANNED COPIES OF THIS PLAN SHEET.

NOTES:

1. FOR ACCURATE RIGHT OF WAY DATA, CONTACT RIGHT OF WAY ENGINEERING AT DISTRICT OFFICE.
2. CALIFORNIA COORDINATE SYSTEM, ZONE: 2, HORIZ DATUM: NAD 83, VERT DATUM: NGVD 29.

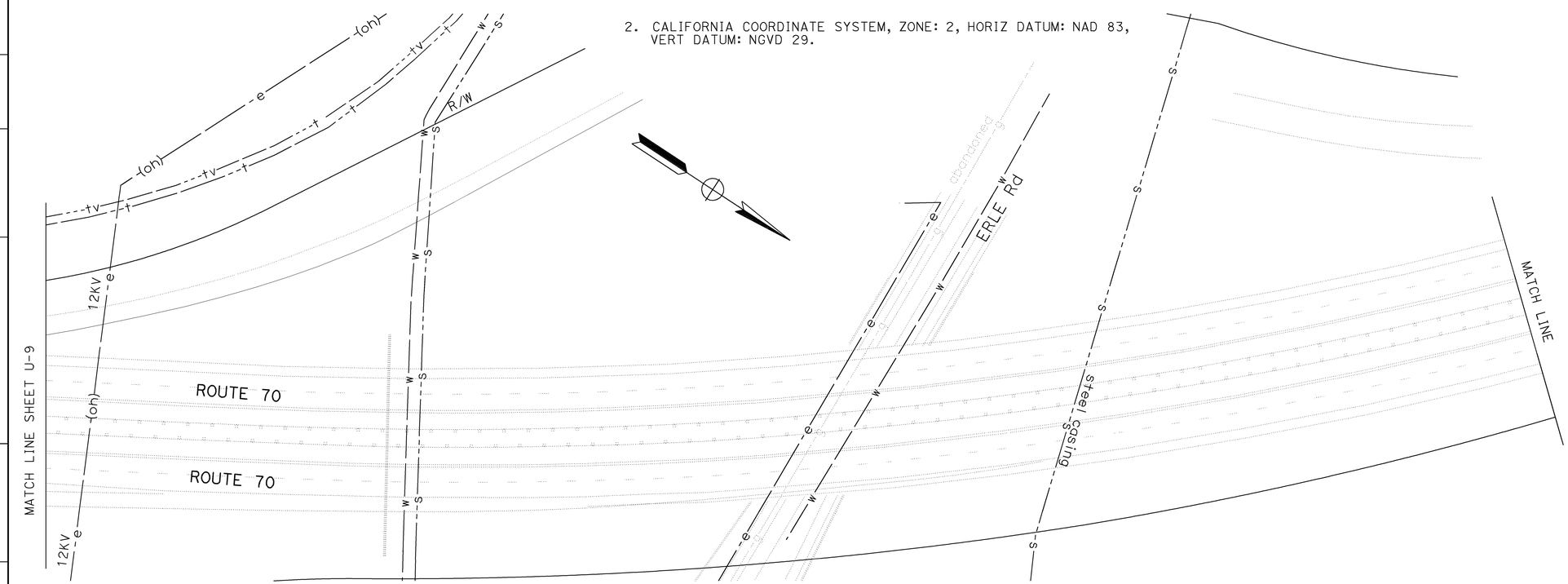

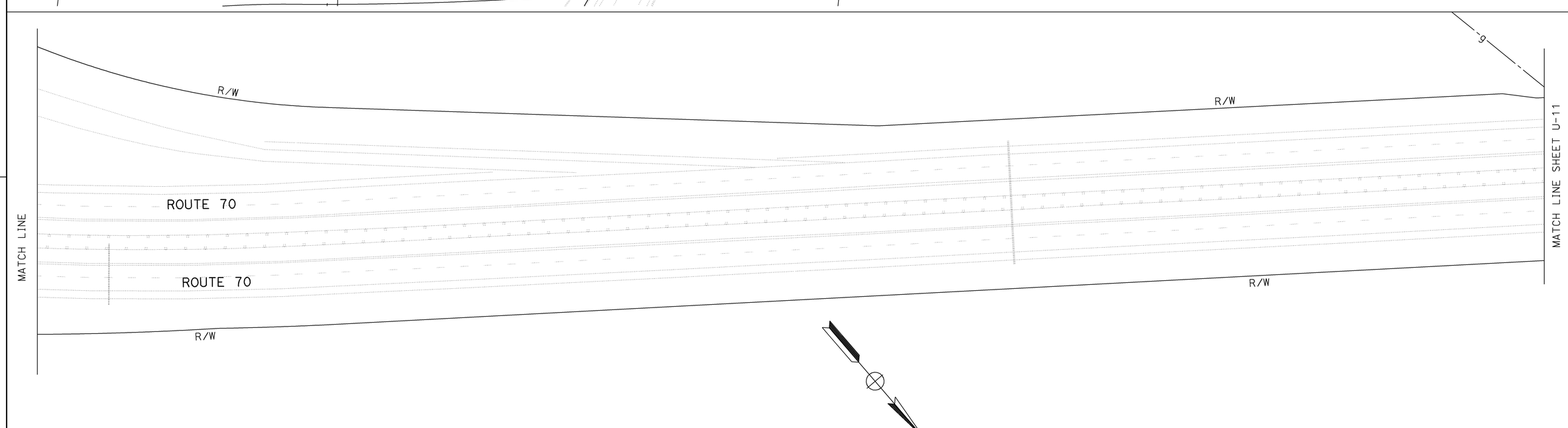

UTILITY PLAN

SCALE: 1" = 50'

U-10

STATE OF CALIFORNIA - DEPARTMENT OF TRANSPORTATION
Caltrans PROJECT DEVELOPMENT

FUNCTIONAL SUPERVISOR: THOMAS BRANNON
CALCULATED-DESIGNED BY: OLAWALE AJAYI
CHECKED BY: PATRICK BISHOP
REVISED BY
DATE REVISED

LAST REVISION 07-26-10
DATE PLOTTED => 26-AUG-2010
TIME PLOTTED => 10:05

Dist	COUNTY	ROUTE	POST MILES TOTAL PROJECT	SHEET No.	TOTAL SHEETS
03	Yub	70	R7.0/13.6	49	113

REGISTERED CIVIL ENGINEER 7-26-10 DATE

7-26-10
PLANS APPROVAL DATE

REGISTERED PROFESSIONAL ENGINEER PATRICK BISHOP No. 59860 Exp. 12-31-11 CIVIL STATE OF CALIFORNIA

THE STATE OF CALIFORNIA OR ITS OFFICERS OR AGENTS SHALL NOT BE RESPONSIBLE FOR THE ACCURACY OR COMPLETENESS OF SCANNED COPIES OF THIS PLAN SHEET.

NOTES:

1. FOR ACCURATE RIGHT OF WAY DATA, CONTACT RIGHT OF WAY ENGINEERING AT DISTRICT OFFICE.

2. CALIFORNIA COORDINATE SYSTEM, ZONE: 2, HORIZ DATUM: NAD 83, VERT DATUM: NGVD 29.

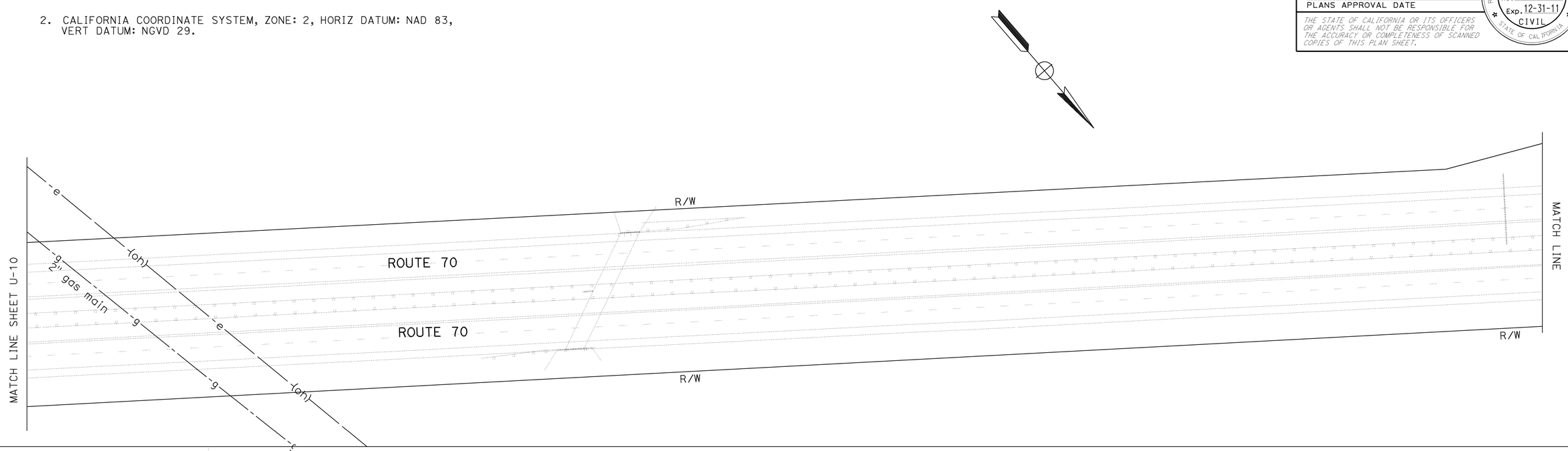

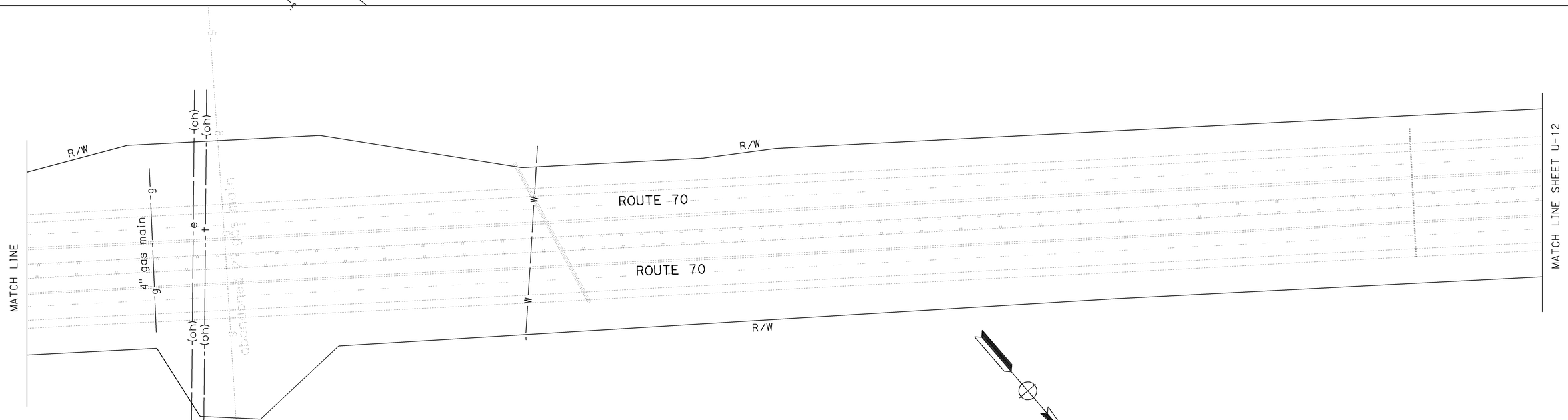

UTILITY PLAN

SCALE: 1" = 50'

U-11

REVISED BY	DATE REVISED

CALCULATED-DESIGNED BY	CHECKED BY
OLAWALE AJAYI	PATRICK BISHOP

FUNCTIONAL SUPERVISOR: THOMAS BRANNON

STATE OF CALIFORNIA - DEPARTMENT OF TRANSPORTATION
Caltrans® PROJECT DEVELOPMENT

LAST REVISION 07-26-10 | DATE PLOTTED => 25-AUG-2010 | TIME PLOTTED => 10:05

Dist	COUNTY	ROUTE	POST MILES TOTAL PROJECT	SHEET No.	TOTAL SHEETS
03	Yub	70	R7.0/13.6	50	113

REGISTERED CIVIL ENGINEER 7-26-10 DATE

7-26-10
PLANS APPROVAL DATE

REGISTERED PROFESSIONAL ENGINEER PATRICK BISHOP No. 59860 Exp. 12-31-11 CIVIL STATE OF CALIFORNIA

THE STATE OF CALIFORNIA OR ITS OFFICERS OR AGENTS SHALL NOT BE RESPONSIBLE FOR THE ACCURACY OR COMPLETENESS OF SCANNED COPIES OF THIS PLAN SHEET.

NOTES:

1. FOR ACCURATE RIGHT OF WAY DATA, CONTACT RIGHT OF WAY ENGINEERING AT DISTRICT OFFICE.

2. CALIFORNIA COORDINATE SYSTEM, ZONE: 2, HORIZ DATUM: NAD 83, VERT DATUM: NGVD 29.

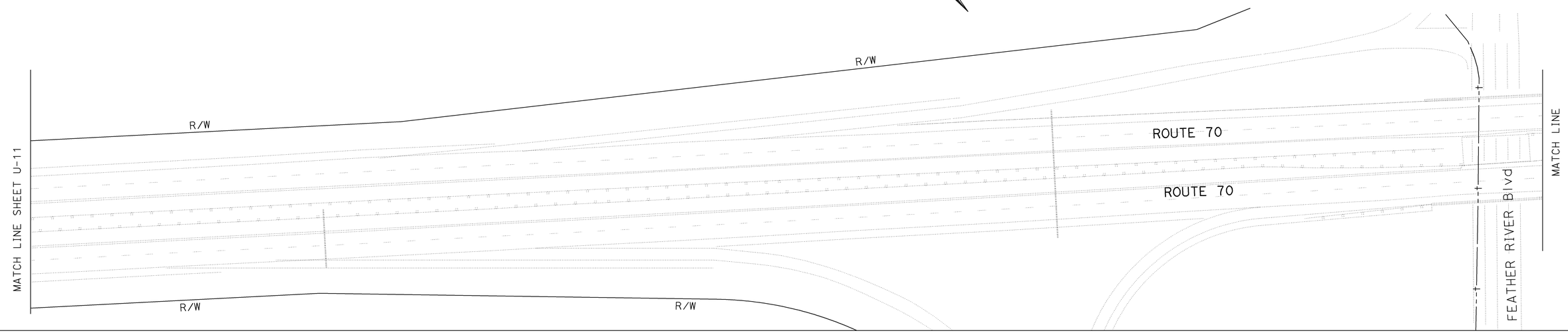

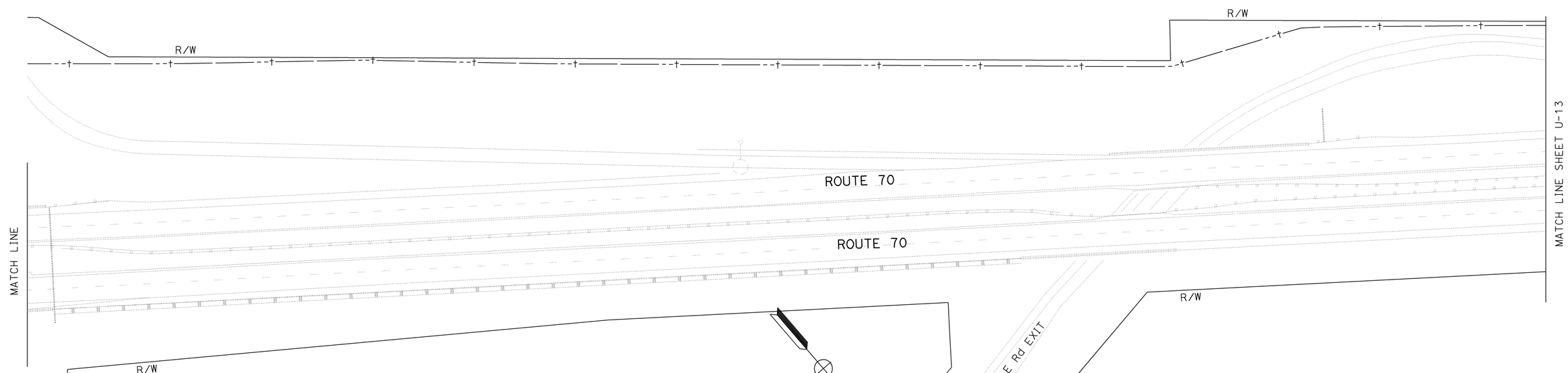

UTILITY PLAN

SCALE: 1" = 50'

U-12

STATE OF CALIFORNIA - DEPARTMENT OF TRANSPORTATION
Caltrans PROJECT DEVELOPMENT

FUNCTIONAL SUPERVISOR: THOMAS BRANNON
CALCULATED-DESIGNED BY: OLAWALE AJAYI
CHECKED BY: PATRICK BISHOP
REVISED BY
DATE REVISED

LAST REVISION 07-26-10
DATE PLOTTED => 25-AUG-2010
TIME PLOTTED => 10:05

Dist	COUNTY	ROUTE	POST MILES TOTAL PROJECT	SHEET No.	TOTAL SHEETS
03	Yub	70	R7.0/13.6	51	113

REGISTERED CIVIL ENGINEER 7-26-10 DATE

7-26-10
PLANS APPROVAL DATE

REGISTERED PROFESSIONAL ENGINEER PATRICK BISHOP No. 59860 Exp. 12-31-11 CIVIL STATE OF CALIFORNIA

THE STATE OF CALIFORNIA OR ITS OFFICERS OR AGENTS SHALL NOT BE RESPONSIBLE FOR THE ACCURACY OR COMPLETENESS OF SCANNED COPIES OF THIS PLAN SHEET.

NOTES:

1. FOR ACCURATE RIGHT OF WAY DATA, CONTACT RIGHT OF WAY ENGINEERING AT DISTRICT OFFICE.

2. CALIFORNIA COORDINATE SYSTEM, ZONE: 2, HORIZ DATUM: NAD 83, VERT DATUM: NGVD 29.

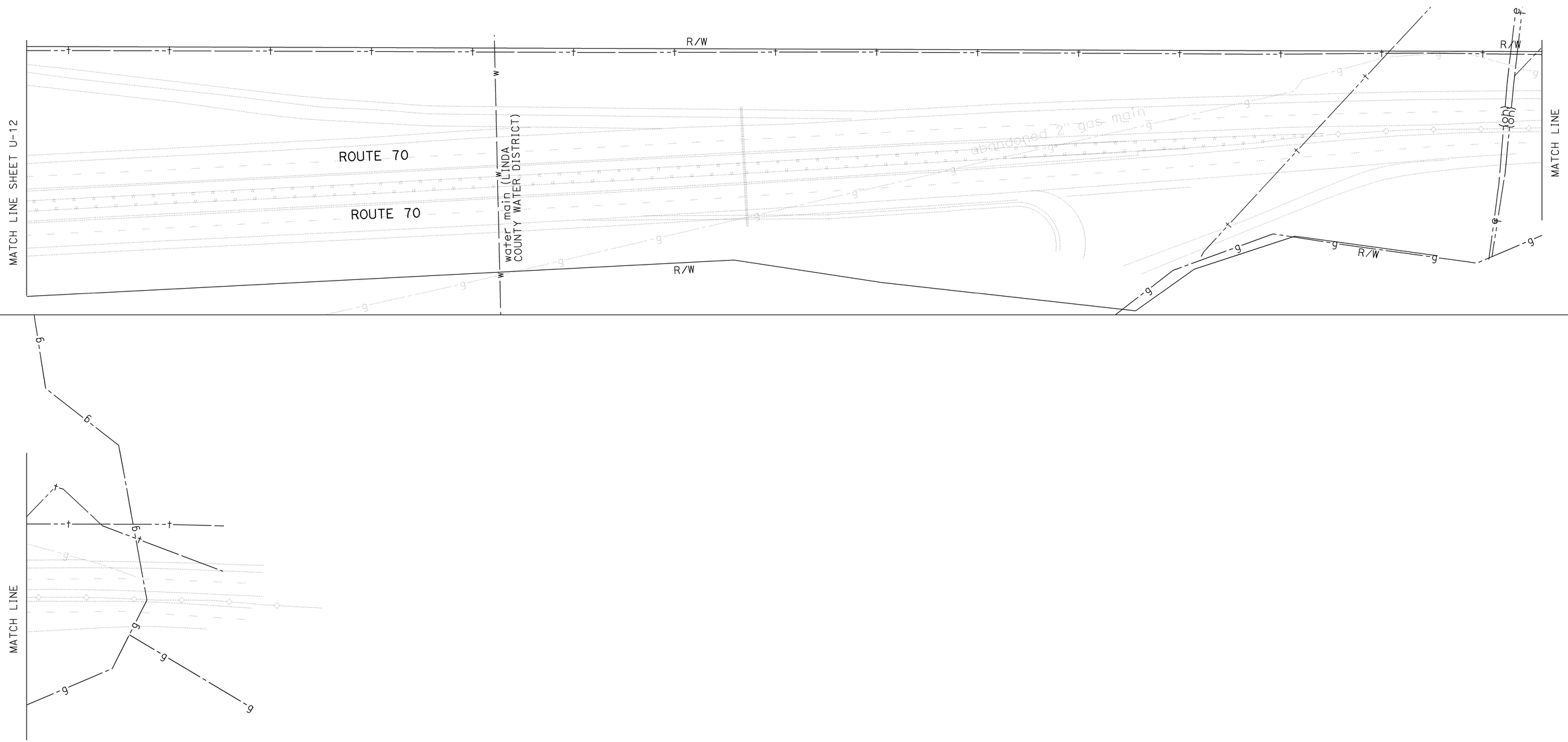

UTILITY PLAN

SCALE: 1" = 50'

U-13

STATE OF CALIFORNIA - DEPARTMENT OF TRANSPORTATION
Caltrans PROJECT DEVELOPMENT

FUNCTIONAL SUPERVISOR: THOMAS BRANNON

CALCULATED-DESIGNED BY: OLAWALE AJAYI
CHECKED BY: PATRICK BISHOP

REVISED BY
DATE REVISED

LAST REVISION DATE PLOTTED => 25-AUG-2010
07-26-10 TIME PLOTTED => 10:05

Dist	COUNTY	ROUTE	POST MILES TOTAL PROJECT	SHEET No.	TOTAL SHEETS
03	Yub	70	R7.0/13.6	52	113

REGISTERED CIVIL ENGINEER 7-26-10 DATE

7-26-10
PLANS APPROVAL DATE

REGISTERED PROFESSIONAL ENGINEER Jeffrey S. Jewett No. 49233 Exp. 9-30-10 CIVIL STATE OF CALIFORNIA

THE STATE OF CALIFORNIA OR ITS OFFICERS OR AGENTS SHALL NOT BE RESPONSIBLE FOR THE ACCURACY OR COMPLETENESS OF ELECTRONIC COPIES OF THIS PLAN SHEET.

STATIONARY MOUNTED CONSTRUCTION AREA SIGNS

SIGN LETTER	SIGN CODE FEDERAL	SIGN CODE CALIFORNIA	PANEL SIZE	SIGN MESSAGE	NUMBER OF POST AND SIZE	NUMBER OF SIGNS
A	G20-1[Spec](7)		84" x 42"	ROAD WORK NEXT 7 MILES	2 - 4" x 6"	2
B	G20-1[Spec](5)		84" x 42"	ROAD WORK NEXT 5 MILES	2 - 4" x 6"	2
C	G20-1[Spec](7)		60" x 30"	ROAD WORK NEXT 7 MILES	2 - 4" x 6"	1
D		C40(Mod)	96" x 60"	TRAFFIC FINES DOUBLED IN WORK ZONES	2 - 6" x 6"	2
E		C40(Mod)	72" x 42"	TRAFFIC FINES DOUBLED IN WORK ZONES	2 - 4" x 6"	1
F	W20-1	C23	48" x 48"	ROAD WORK AHEAD	1 - 6" x 6"	11
G	G20-2	C14	36" x 18"	END ROAD WORK	1 - 4" x 4"	14
H		C14	48" x 24"	END ROAD WORK	1 - 4" x 6"	2

NOTES:

1. EXACT SIGN LOCATIONS TO BE DETERMINED BY THE ENGINEER.
2. FOR ADDITIONAL STATIONARY MOUNTED CONSTRUCTION AREA SIGNS, SEE TRAFFIC HANDLING QUANTITIES.
3. THIS PLAN ACCURATE FOR CONSTRUCTION AREA SIGN WORK ONLY.

LEGEND

(X) CONSTRUCTION AREA SIGN LETTER

SIGN - SINGLE POST

SIGN - TWO POSTS

<CA> CALIFORNIA SIGN CODE

SIGN DETAILS

(A) G20-1[Spec](7)

ROAD WORK
NEXT 7 MILES

8" C SERIES LETTERS

84"x42"

RETROREFLECTIVE ORANGE BACKGROUND WITH BLACK LEGEND AND BORDER.

(B) G20-1[Spec](5)

ROAD WORK
NEXT 5 MILES

8" C SERIES LETTERS

84"x42"

RETROREFLECTIVE ORANGE BACKGROUND WITH BLACK LEGEND AND BORDER.

(C) G20-1[Spec](7)

ROAD WORK
NEXT 7 MILES

6" C SERIES LETTERS

60"x30"

RETROREFLECTIVE ORANGE BACKGROUND WITH BLACK LEGEND AND BORDER.

(D) C40(Mod)<CA>

TRAFFIC FINES
DOUBLED IN
WORK ZONES

8" D SERIES LETTERS

96"x60"

RETROREFLECTIVE WHITE BACKGROUND WITH BLACK LEGEND AND BORDER.

(E) C40(Mod)<CA>

TRAFFIC FINES
DOUBLED IN
WORK ZONES

6" D SERIES LETTERS

72"x42"

RETROREFLECTIVE WHITE BACKGROUND WITH BLACK LEGEND AND BORDER.

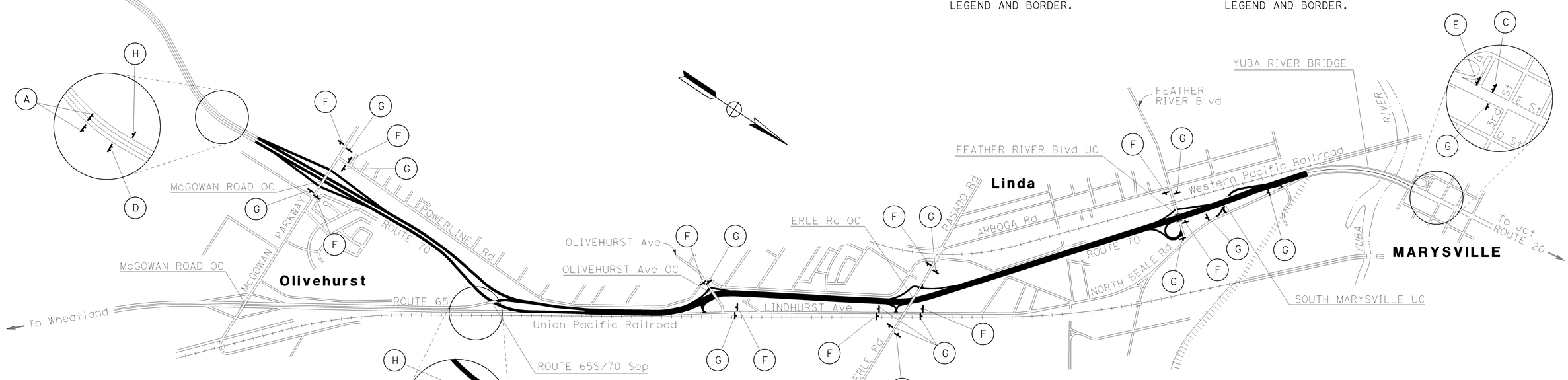

CONSTRUCTION AREA SIGNS

NO SCALE

CS-1

STATE OF CALIFORNIA - DEPARTMENT OF TRANSPORTATION
Caltrans
TRAFFIC

FUNCTIONAL SUPERVISOR: JOSEPH W. HORTON
CALCULATED-DESIGNED BY: JACK KEMMERLY
CHECKED BY: JEFF JEWETT
REVISED BY
DATE REVISED

LAST REVISION 6-15-10
DATE PLOTTED => 25-AUG-2010
TIME PLOTTED => 10:05

Dist	COUNTY	ROUTE	POST MILES TOTAL PROJECT	SHEET No.	TOTAL SHEETS
03	Yub	70	R7.0/13.6	53	113

REGISTERED CIVIL ENGINEER 7-26-10 DATE

7-26-10
PLANS APPROVAL DATE

REGISTERED PROFESSIONAL ENGINEER J. A. HUERTA No. 59506 Exp. 12-31-12 CIVIL STATE OF CALIFORNIA

THE STATE OF CALIFORNIA OR ITS OFFICERS OR AGENTS SHALL NOT BE RESPONSIBLE FOR THE ACCURACY OR COMPLETENESS OF SCANNED COPIES OF THIS PLAN SHEET.

NOTES:

1. THIS PLAN ACCURATE FOR STAGE CONSTRUCTION AND TRAFFIC HANDLING WORK ONLY.
2. FOR ADDITIONAL CONSTRUCTION AREA SIGNS, SEE SHEETS CS-1 AND THQ-1.
3. ALL SIGN CODES SHOWN ARE MUTCD SIGN CODES UNLESS OTHERWISE DESIGNATED AS CALIFORNIA SIGN CODES.
4. ALL TRAFFIC PLASTIC DRUMS SHALL BE INSTALLED ON 50 FOOT CENTERS UNLESS OTHERWISE SHOWN.
5. FOR ADDITIONAL INFORMATION ON CRASH CUSHION (ABSORB 350), SEE CONSTRUCTION DETAILS SHEET C-26.
6. EXACT SIGN LOCATIONS TO BE DETERMINED BY THE ENGINEER.
7. FOR ACCURATE RIGHT OF WAY DATA, CONTACT RIGHT OF WAY ENGINEERING AT THE DISTRICT OFFICE.

LEGEND

- TEMPORARY RAILING (TYPE K)
- TEMPORARY CRASH CUSHION (ARRAY 'TS14')
- TEMPORARY CRASH CUSHION (ABSORB 350)
- TRAFFIC PLASTIC DRUM
- DIRECTION OF TRAFFIC
- (X) CONSTRUCTION AREA SIGN LETTER
- SIGN - SINGLE POST
- <CA> CALIFORNIA SIGN CODE

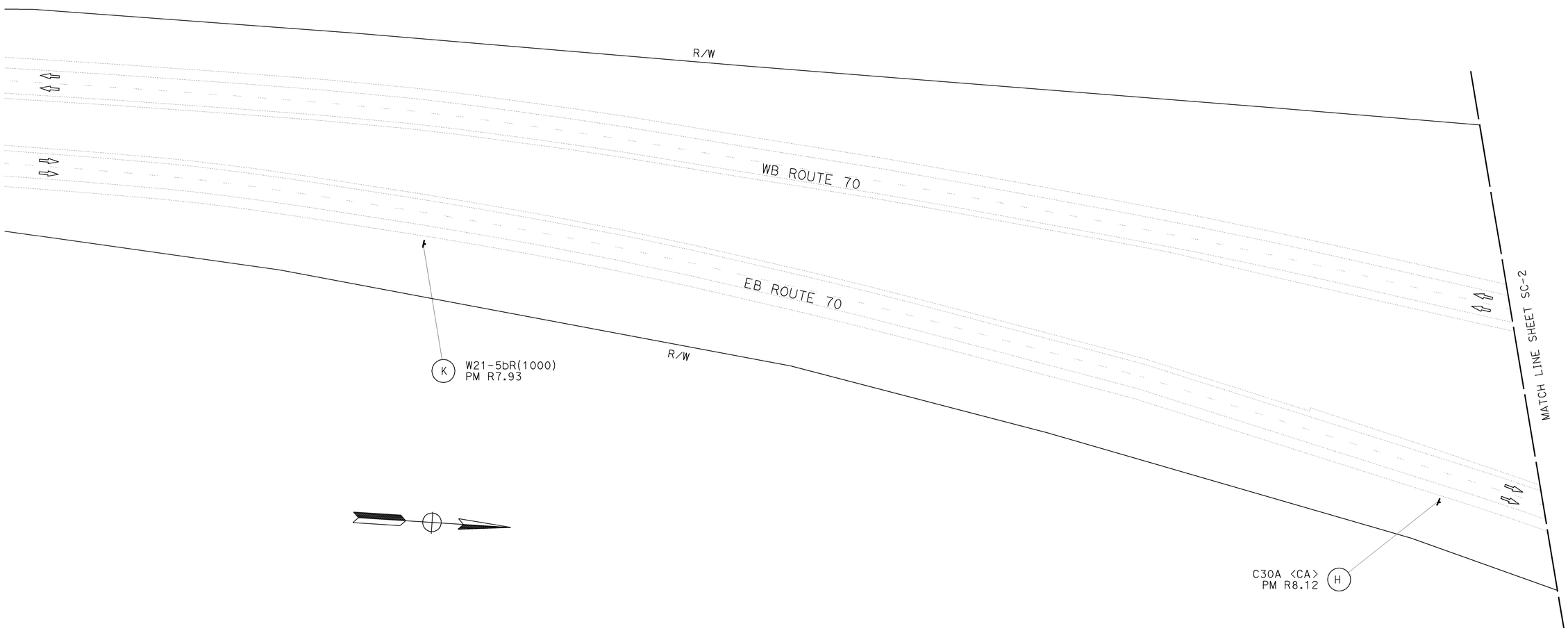

STAGE CONSTRUCTION

SCALE: 1" = 50'

SC-1

STATE OF CALIFORNIA - DEPARTMENT OF TRANSPORTATION
Caltrans® PROJECT DEVELOPMENT

FUNCTIONAL SUPERVISOR: KEVIN ESPINOZA
CALCULATED-DESIGNED BY: JOSE L. VALDEZ
CHECKED BY: J. A. HUERTA
REVISED BY
DATE REVISED

LAST REVISION 05/21/10
DATE PLOTTED => 25-AUG-2010
TIME PLOTTED => 10:05

Dist	COUNTY	ROUTE	POST MILES TOTAL PROJECT	SHEET No.	TOTAL SHEETS
03	Yub	70	R7.0/13.6	54	113

REGISTERED CIVIL ENGINEER 7-26-10 DATE

7-26-10
PLANS APPROVAL DATE

REGISTERED PROFESSIONAL ENGINEER J. A. HUERTA No. 59506 Exp. 12-31-12 CIVIL STATE OF CALIFORNIA

THE STATE OF CALIFORNIA OR ITS OFFICERS OR AGENTS SHALL NOT BE RESPONSIBLE FOR THE ACCURACY OR COMPLETENESS OF SCANNED COPIES OF THIS PLAN SHEET.

NOTE:

1. FOR ACCURATE RIGHT OF WAY DATA, CONTACT RIGHT OF WAY ENGINEERING AT THE DISTRICT OFFICE.

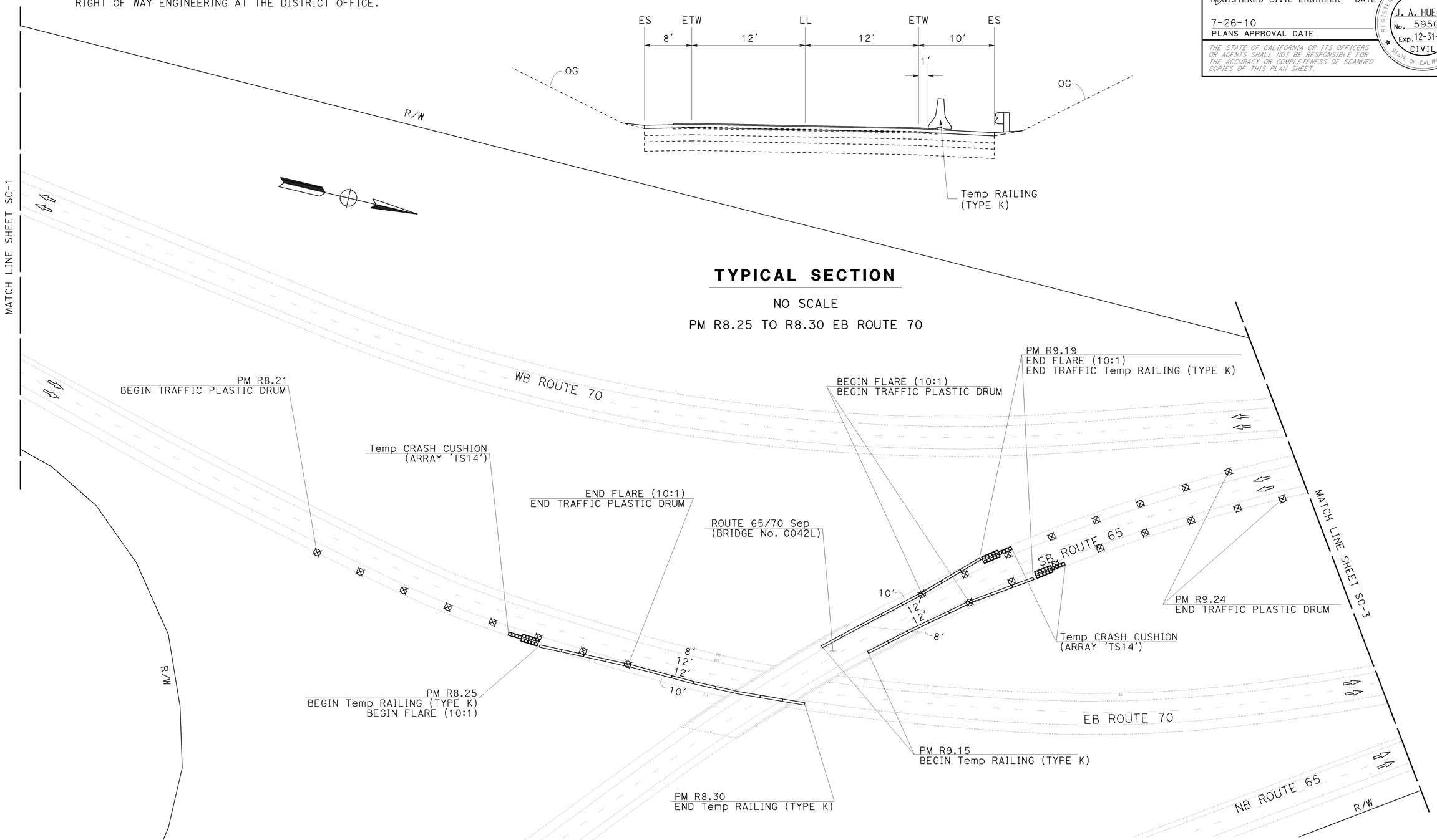

TYPICAL SECTION

NO SCALE

PM R8.25 TO R8.30 EB ROUTE 70

STAGE CONSTRUCTION

SCALE: 1" = 50′

SC-2

STATE OF CALIFORNIA - DEPARTMENT OF TRANSPORTATION
Caltrans® PROJECT DEVELOPMENT

FUNCTIONAL SUPERVISOR: KEVIN ESPINOZA
CALCULATED-DESIGNED BY: JOSE L. VALDEZ
CHECKED BY: J. A. HUERTA
REVISED BY
DATE REVISED

LAST REVISION 05/21/10
DATE PLOTTED => 25-AUG-2010
TIME PLOTTED => 10:05

Dist	COUNTY	ROUTE	POST MILES TOTAL PROJECT	SHEET No.	TOTAL SHEETS
03	Yub	70	R7.0/13.6	55	113

REGISTERED CIVIL ENGINEER 7-26-10 DATE

7-26-10
PLANS APPROVAL DATE

REGISTERED PROFESSIONAL ENGINEER J. A. HUERTA No. 59506 Exp. 12-31-12 CIVIL STATE OF CALIFORNIA

THE STATE OF CALIFORNIA OR ITS OFFICERS OR AGENTS SHALL NOT BE RESPONSIBLE FOR THE ACCURACY OR COMPLETENESS OF SCANNED COPIES OF THIS PLAN SHEET.

NOTE:

1. FOR ACCURATE RIGHT OF WAY DATA, CONTACT RIGHT OF WAY ENGINEERING AT THE DISTRICT OFFICE.

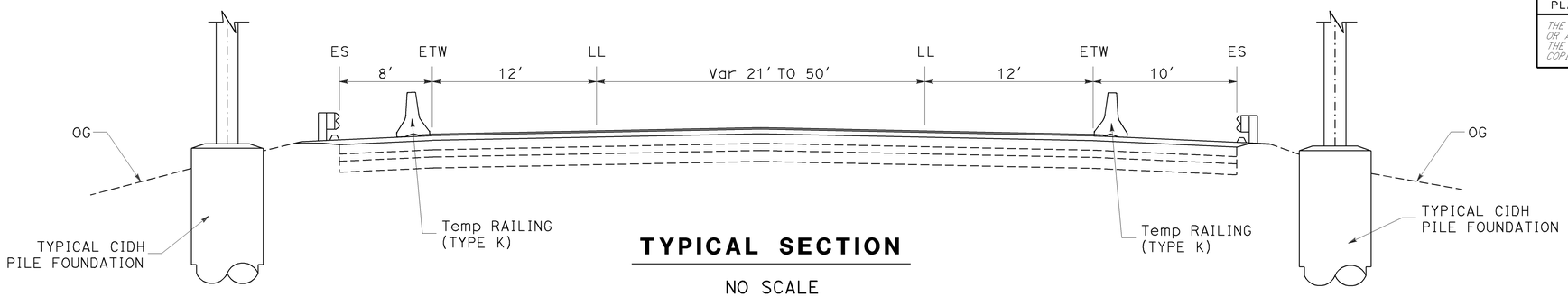

TYPICAL SECTION

NO SCALE

PM R8.41 TO R8.54 WB ROUTE 70

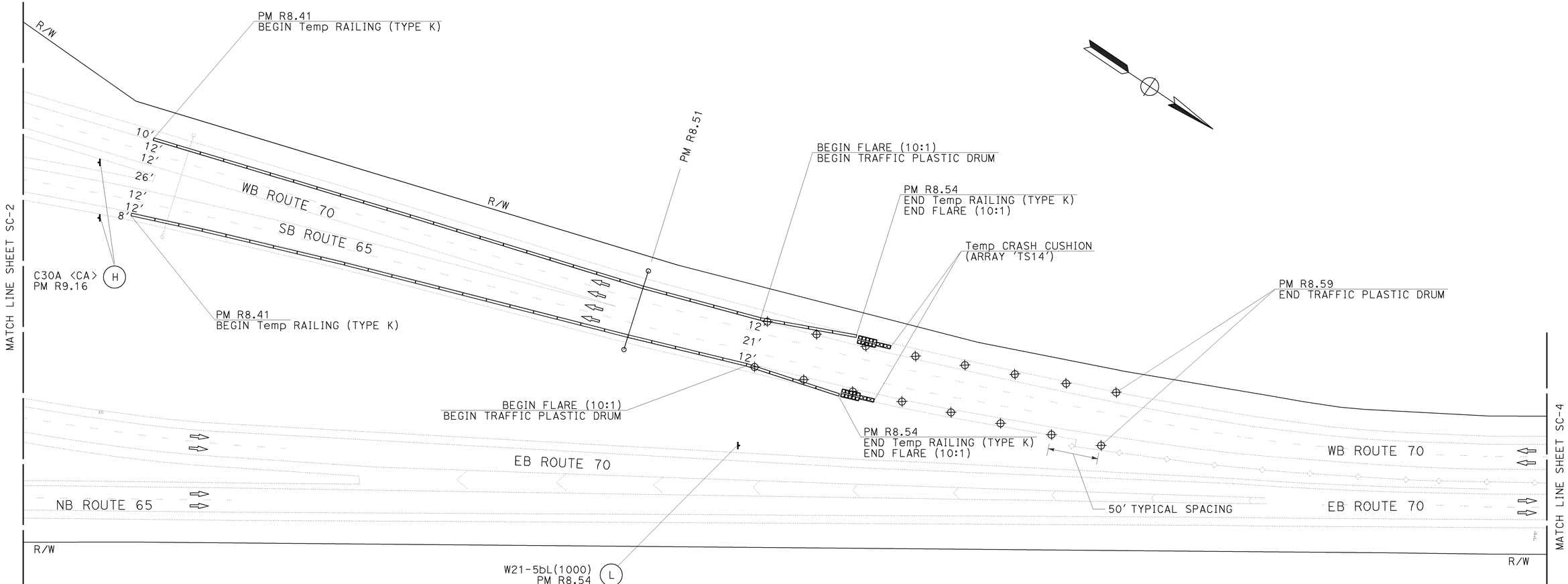

STAGE CONSTRUCTION

SCALE: 1" = 50′ **SC-3**

STATE OF CALIFORNIA - DEPARTMENT OF TRANSPORTATION
Caltrans® PROJECT DEVELOPMENT

FUNCTIONAL SUPERVISOR: KEVIN ESPINOZA
CALCULATED-DESIGNED BY: JOSE L. VALDEZ
CHECKED BY: J. A. HUERTA
REVISED BY
DATE REVISED

LAST REVISION 05/21/10
DATE PLOTTED => 25-AUG-2010
TIME PLOTTED => 10:05

Dist	COUNTY	ROUTE	POST MILES TOTAL PROJECT	SHEET No.	TOTAL SHEETS
03	Yub	70	R7.0/13.6	56	113

REGISTERED CIVIL ENGINEER 7-26-10 DATE

7-26-10
PLANS APPROVAL DATE

REGISTERED PROFESSIONAL ENGINEER J. A. HUERTA No. 59506 Exp. 12-31-12 CIVIL STATE OF CALIFORNIA

THE STATE OF CALIFORNIA OR ITS OFFICERS OR AGENTS SHALL NOT BE RESPONSIBLE FOR THE ACCURACY OR COMPLETENESS OF SCANNED COPIES OF THIS PLAN SHEET.

NOTE:

1. FOR ACCURATE RIGHT OF WAY DATA, CONTACT RIGHT OF WAY ENGINEERING AT THE DISTRICT OFFICE.

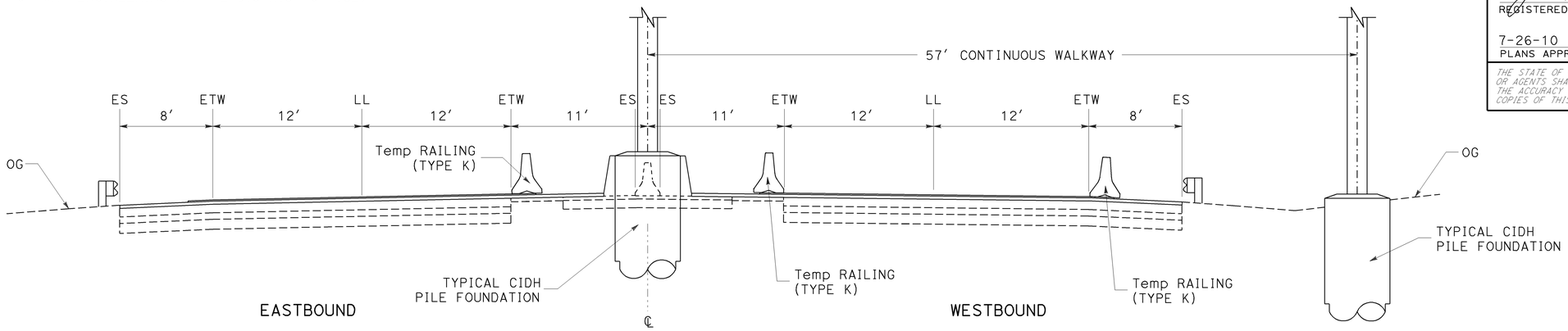

TYPICAL SECTION

NO SCALE

PM R8.88 TO R8.99 ROUTE 70

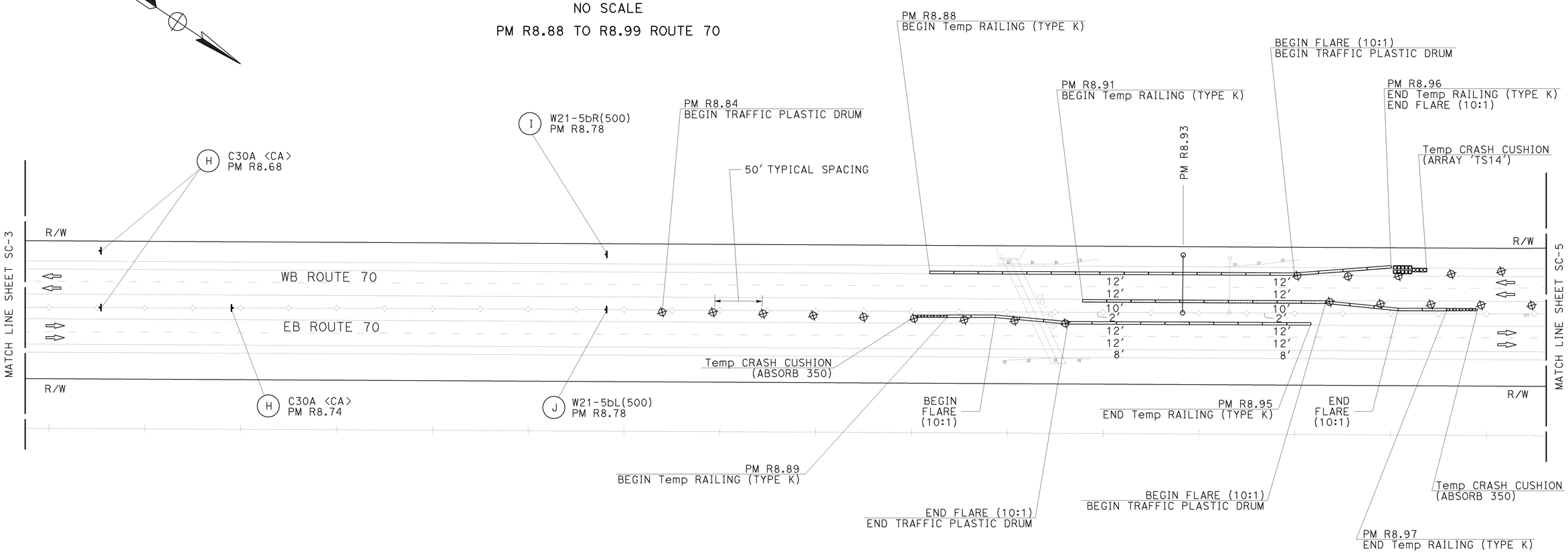

STAGE CONSTRUCTION

SCALE: 1" = 50'

SC-4

STATE OF CALIFORNIA - DEPARTMENT OF TRANSPORTATION
Caltrans® PROJECT DEVELOPMENT

FUNCTIONAL SUPERVISOR: KEVIN ESPINOZA
CALCULATED-DESIGNED BY: JOSE L. VALDEZ
CHECKED BY: J. A. HUERTA
REVISED BY
DATE REVISED

LAST REVISION 05/21/10
DATE PLOTTED => 25-AUG-2010
TIME PLOTTED => 10:05

Dist	COUNTY	ROUTE	POST MILES TOTAL PROJECT	SHEET No.	TOTAL SHEETS
03	Yub	70	R7.0/13.6	57	113

REGISTERED CIVIL ENGINEER 7-26-10 DATE

7-26-10
PLANS APPROVAL DATE

REGISTERED PROFESSIONAL ENGINEER J. A. HUERTA No. 59506 Exp. 12-31-12 CIVIL STATE OF CALIFORNIA

THE STATE OF CALIFORNIA OR ITS OFFICERS OR AGENTS SHALL NOT BE RESPONSIBLE FOR THE ACCURACY OR COMPLETENESS OF SCANNED COPIES OF THIS PLAN SHEET.

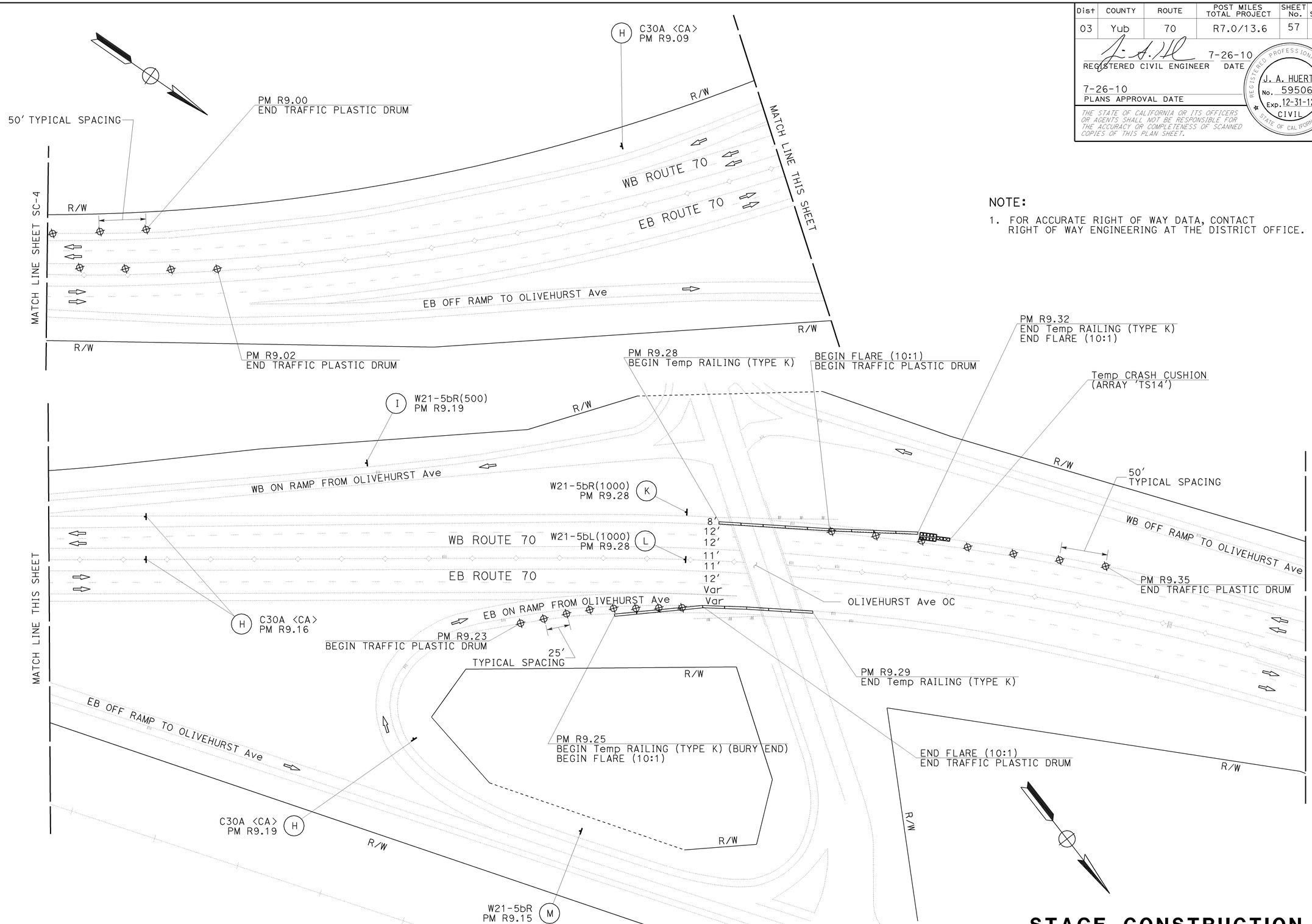

NOTE:

1. FOR ACCURATE RIGHT OF WAY DATA, CONTACT RIGHT OF WAY ENGINEERING AT THE DISTRICT OFFICE.

STAGE CONSTRUCTION

SCALE: 1" = 50'

SC-5

REVISED BY	DATE REVISED
JOSE L. VALDEZ	J. A. HUERTA
CALCULATED-DESIGNED BY	CHECKED BY
FUNCTIONAL SUPERVISOR	KEVIN ESPINOZA

STATE OF CALIFORNIA - DEPARTMENT OF TRANSPORTATION
Caltrans® PROJECT DEVELOPMENT

LAST REVISION 05/21/10 | DATE PLOTTED => 25-AUG-2010 | TIME PLOTTED => 10:05

Dist	COUNTY	ROUTE	POST MILES TOTAL PROJECT	SHEET No.	TOTAL SHEETS
03	Yub	70	R7.0/13.6	58	113

REGISTERED CIVIL ENGINEER 7-26-10 DATE

7-26-10
PLANS APPROVAL DATE

REGISTERED PROFESSIONAL ENGINEER J. A. HUERTA No. 59506 Exp. 12-31-12 CIVIL STATE OF CALIFORNIA

THE STATE OF CALIFORNIA OR ITS OFFICERS OR AGENTS SHALL NOT BE RESPONSIBLE FOR THE ACCURACY OR COMPLETENESS OF SCANNED COPIES OF THIS PLAN SHEET.

NOTE:

1. FOR ACCURATE RIGHT OF WAY DATA, CONTACT RIGHT OF WAY ENGINEERING AT THE DISTRICT OFFICE.

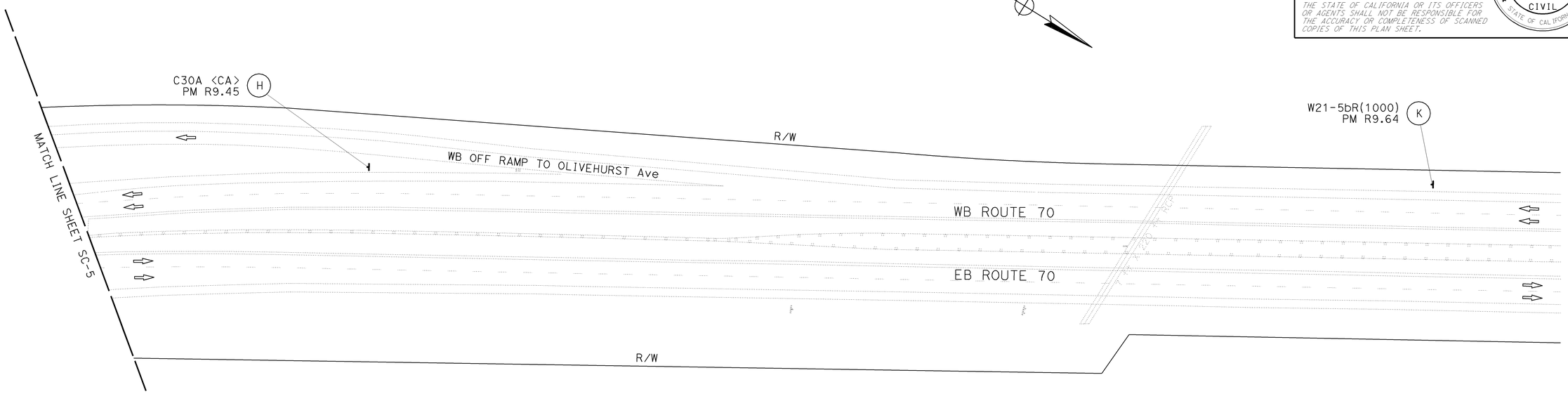

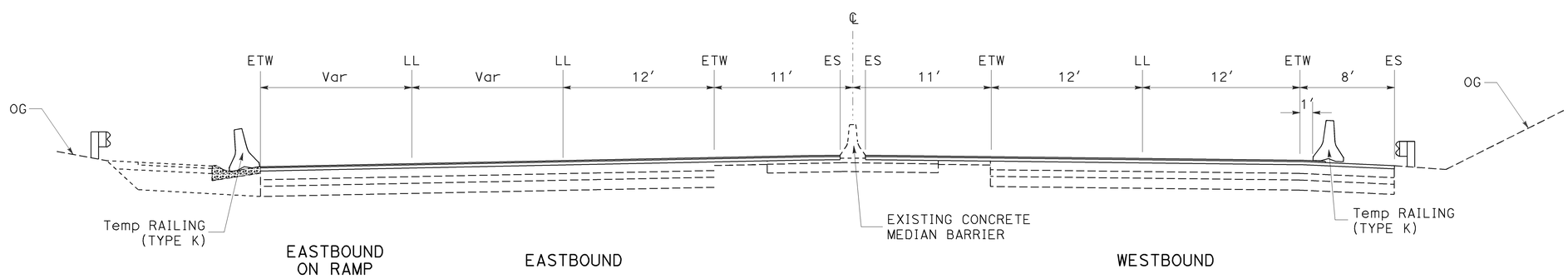

TYPICAL SECTION

NO SCALE

PM R9.25 TO R9.32 WB/EB ROUTE 70
AND EB ON RAMP FROM OLIVEHURST Ave

STAGE CONSTRUCTION

SCALE: 1" = 50′ **SC-6**

STATE OF CALIFORNIA - DEPARTMENT OF TRANSPORTATION
Caltrans® PROJECT DEVELOPMENT

FUNCTIONAL SUPERVISOR: KEVIN ESPINOZA
CALCULATED-DESIGNED BY: JOSE L. VALDEZ
CHECKED BY: J. A. HUERTA
REVISED BY
DATE REVISED

LAST REVISION 05/21/10
DATE PLOTTED => 25-AUG-2010
TIME PLOTTED => 10:05

Dist	COUNTY	ROUTE	POST MILES TOTAL PROJECT	SHEET No.	TOTAL SHEETS
03	Yub	70	R7.0/13.6	59	113

REGISTERED CIVIL ENGINEER 7-26-10 DATE

7-26-10
PLANS APPROVAL DATE

REGISTERED PROFESSIONAL ENGINEER J. A. HUERTA No. 59506 Exp. 12-31-12 CIVIL STATE OF CALIFORNIA

THE STATE OF CALIFORNIA OR ITS OFFICERS OR AGENTS SHALL NOT BE RESPONSIBLE FOR THE ACCURACY OR COMPLETENESS OF SCANNED COPIES OF THIS PLAN SHEET.

NOTE:

1. FOR ACCURATE RIGHT OF WAY DATA, CONTACT RIGHT OF WAY ENGINEERING AT THE DISTRICT OFFICE.

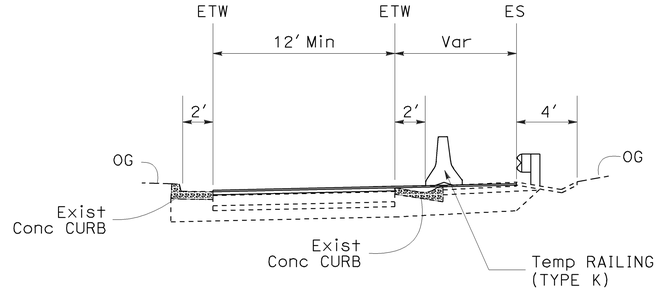

TYPICAL SECTION

NO SCALE

PM 13.25 TO 13.29 WB OFF RAMP TO NORTH BEALE ROAD

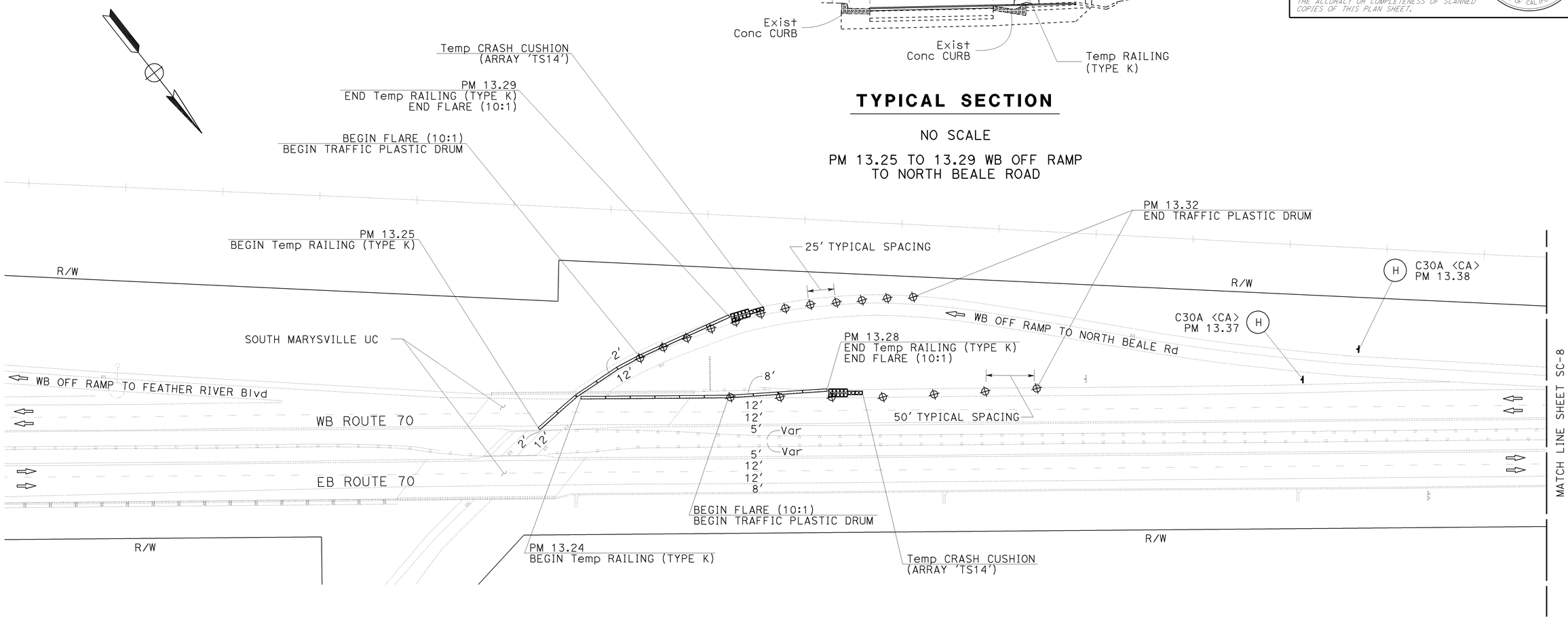

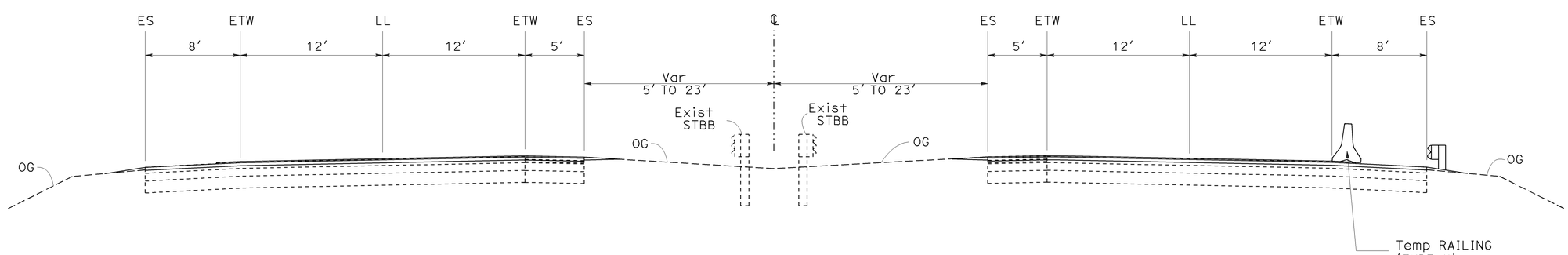

EASTBOUND

WESTBOUND

TYPICAL SECTION

NO SCALE

PM 13.24 TO 13.28 WB ROUTE 70

STAGE CONSTRUCTION

SCALE: 1" = 50′ **SC-7**

STATE OF CALIFORNIA - DEPARTMENT OF TRANSPORTATION
Caltrans® PROJECT DEVELOPMENT

FUNCTIONAL SUPERVISOR: KEVIN ESPINOZA
CALCULATED-DESIGNED BY: JOSE L. VALDEZ
CHECKED BY: J. A. HUERTA
REVISED BY
DATE REVISED

LAST REVISION 05/22/10
DATE PLOTTED => 25-AUG-2010
TIME PLOTTED => 10:05

Dist	COUNTY	ROUTE	POST MILES TOTAL PROJECT	SHEET No.	TOTAL SHEETS
03	Yub	70	R7.0/13.6	60	113

REGISTERED CIVIL ENGINEER 7-26-10 DATE

7-26-10
PLANS APPROVAL DATE

REGISTERED PROFESSIONAL ENGINEER J. A. HUERTA No. 59506 Exp. 12-31-12 CIVIL STATE OF CALIFORNIA

THE STATE OF CALIFORNIA OR ITS OFFICERS OR AGENTS SHALL NOT BE RESPONSIBLE FOR THE ACCURACY OR COMPLETENESS OF SCANNED COPIES OF THIS PLAN SHEET.

NOTE:

1. FOR ACCURATE RIGHT OF WAY DATA, CONTACT RIGHT OF WAY ENGINEERING AT THE DISTRICT OFFICE.

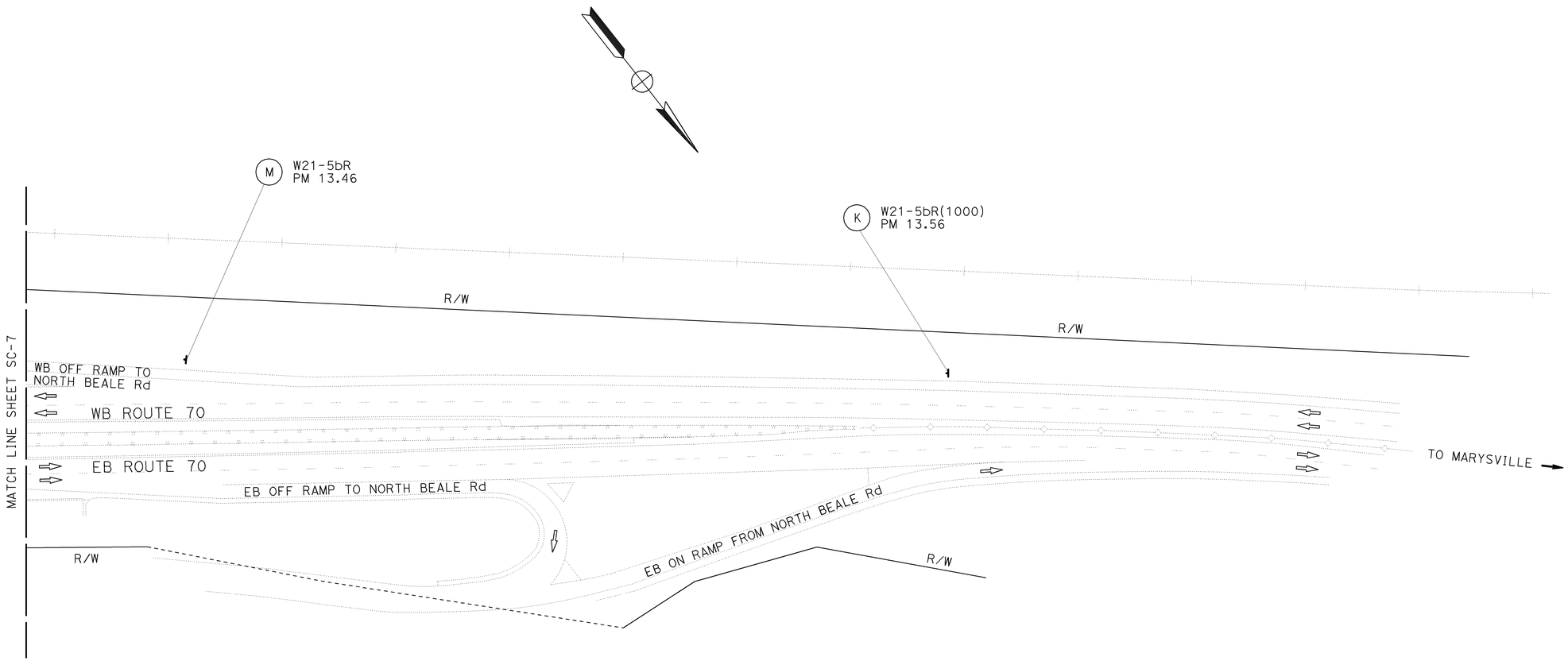

STAGE CONSTRUCTION

SCALE: 1" = 50′ **SC-8**

STATE OF CALIFORNIA - DEPARTMENT OF TRANSPORTATION
Caltrans® PROJECT DEVELOPMENT

FUNCTIONAL SUPERVISOR: KEVIN ESPINOZA
CALCULATED-DESIGNED BY: J. A. HUERTA
CHECKED BY:
REVISED BY:
DATE REVISED:

LAST REVISION 05/21/10
DATE PLOTTED => 25-AUG-2010
TIME PLOTTED => 10:05

Dist	COUNTY	ROUTE	POST MILES TOTAL PROJECT	SHEET No.	TOTAL SHEETS
03	Yub	70	R7.0/13.6	61	113

REGISTERED CIVIL ENGINEER 7-26-10 DATE

7-26-10
PLANS APPROVAL DATE

REGISTERED PROFESSIONAL ENGINEER J. A. HUERTA No. 59506 Exp. 12-31-12 CIVIL STATE OF CALIFORNIA

THE STATE OF CALIFORNIA OR ITS OFFICERS OR AGENTS SHALL NOT BE RESPONSIBLE FOR THE ACCURACY OR COMPLETENESS OF SCANNED COPIES OF THIS PLAN SHEET.

NOTES:

1. EXACT SIGN LOCATIONS TO BE DETERMINED BY THE ENGINEER.
2. FOR ADDITIONAL CONSTRUCTION AREA SIGNS, SEE SHEET CS-1.
3. ALL SIGN CODES SHOWN ARE MUTCD SIGN CODES UNLESS OTHERWISE DESIGNATED AS CALIFORNIA SIGN CODES.
4. ALL TRAFFIC PLASTIC DRUMS SHALL BE INSTALLED ON 50 FOOT CENTERS UNLESS OTHERWISE SHOWN.

ADDITIONAL STATIONARY MOUNTED CONSTRUCTION AREA SIGNS

SIGN LETTER	SIGN CODE		PANEL SIZE	SIGN MESSAGE	NUMBER OF POST AND SIZE	NUMBER OF SIGNS
	FEDERAL	CALIFORNIA				
H	—	C30A	48" x 48"	SHOULDER CLOSED	1 - 6" x 6"	13
I	W21-5bR(500)	—	48" x 48"	RIGHT SHOULDER CLOSED 500 FT	1 - 6" x 6"	2
J	W21-5bL(500)	—	48" x 48"	LEFT SHOULDER CLOSED 500 FT	1 - 6" x 6"	1
K	W21-5bR(1000)	—	48" x 48"	RIGHT SHOULDER CLOSED 1000 FT	1 - 6" x 6"	4
L	W21-5bL(1000)	—	48" x 48"	LEFT SHOULDER CLOSED 1000 FT	1 - 6" x 6"	2
M	W21-5bR	—	48" x 48"	RIGHT SHOULDER CLOSED	1 - 6" x 6"	2

TEMPORARY CRASH CUSHION (TYPE ABSORB 350)

STAGE	SHEET No.	LOCATION	EA
1	SC-4	EB ROUTE 70 (PM R8.89 Lt)	1
1	SC-4	WB ROUTE 70 (PM R8.99 Lt)	1
		TOTAL	2

TRAFFIC PLASTIC DRUM

STAGE	SHEET No.	LOCATION	EA
1	SC-2	EB ROUTE 70 (PM R8.22 TO R8.27 Rt)	7
1	SC-3	WB ROUTE 70 (PM R8.53 TO R8.59 Lt)	8
1	SC-3	WB ROUTE 70 (PM R8.53 TO R8.59 Rt)	8
1	SC-4	EB ROUTE 70 (PM R8.84 TO R8.91 Lt)	9
1	SC-4, SC-5	WB ROUTE 70 (PM R8.95 TO R9.00 Rt)	8
1	SC-4, SC-5	WB ROUTE 70 (PM R8.95 TO R9.02 Lt)	9
1	SC-5	EB ON RAMP FROM OLIVEHURST Ave (PM R9.23 TO R9.27 Rt)	8
1	SC-5	WB ROUTE 70 (PM R9.30 TO R9.35 Rt)	7
1	SC-7	WB OFF RAMP TO NORTH BEALE ROAD (PM 13.27 TO 13.32 Rt)	12
1	SC-7	WB ROUTE 70 (PM 13.27 TO 13.32 Rt)	7
1	SC-2	SB ROUTE 65 (PM R9.17 TO R9.24 Lt)	8
1	SC-2	SB ROUTE 65 (PM R9.17 TO R9.24 Rt)	8
		TOTAL	99

TEMPORARY CRASH CUSHION MODULE

STAGE	SHEET No.	LOCATION	ARRAY 'TS14' (EA)
1	SC-2	EB ROUTE 70 (PM R8.25 Rt)	14
1	SC-3	WB ROUTE 70 (PM R8.54 Lt)	14
1	SC-3	WB ROUTE 70 (PM R8.54 Rt)	14
1	SC-4	WB ROUTE 70 (PM R8.96 Rt)	14
1	SC-5	WB ROUTE 70 (PM R8.32 Rt)	14
1	SC-7	WB ROUTE 70 (PM 13.28 Rt)	14
1	SC-7	WB OFF RAMP TO NORTH BEALE ROAD (PM 13.29 Rt)	14
1	SC-2	SB ROUTE 65 (PM R9.20 Lt)	14
1	SC-2	SB ROUTE 65 (PM R9.20 Rt)	14
		TOTAL	126

TEMPORARY RAILING (TYPE K)

STAGE	SHEET No.	LOCATION	LENGTH LF
1	SC-2	EB ROUTE 70 (PM R8.25 TO R8.30 Rt)	260.0
1	SC-3	WB ROUTE 70 (PM R8.41 TO R8.54 Lt)	680.0
1	SC-3	WB ROUTE 70 (PM R8.41 TO R8.54 Rt)	680.0
1	SC-4	WB ROUTE 70 (PM R8.88 TO R8.96 Rt)	440.0
1	SC-4	WB ROUTE 70 (PM R8.91 TO R8.97 Lt)	340.0
1	SC-4	EB ROUTE 70 (PM R8.89 TO R8.95 Lt)	340.0
1	SC-5	EB ON RAMP FROM OLIVEHURST Ave (PM R9.25 TO R9.29 Rt)	200.0
1	SC-5	WB ROUTE 70 (PM R9.28 TO R9.32 Rt)	200.0
1	SC-7	WB ROUTE 70 (PM R13.24 TO 13.28 Rt)	220.0
1	SC-7	WB OFF RAMP TO NORTH BEALE ROAD (PM 13.25 TO 13.29 Rt)	200.0
1	SC-2	SB ROUTE 65 (PM R9.15 TO R9.19 Lt)	200.0
1	SC-2	SB ROUTE 65 (PM R9.15 TO R9.19 Rt)	200.0
		TOTAL	3,960.0

1. FOR INSTALLATION LOCATIONS, SEE STAGE CONSTRUCTION PLAN SHEETS SC-1 TO SC-7.

TRAFFIC HANDLING QUANTITIES

THQ-1

REVISED BY | DATE REVISED
JOSE L. VALDEZ | J. A. HUERTA
CALCULATED-DESIGNED BY | CHECKED BY
FUNCTIONAL SUPERVISOR: KEVIN ESPINOZA
STATE OF CALIFORNIA - DEPARTMENT OF TRANSPORTATION
Caltrans® PROJECT DEVELOPMENT

LAST REVISION 05/22/10 | DATE PLOTTED => 25-AUG-2010 | TIME PLOTTED => 10:05

Dist	COUNTY	ROUTE	POST MILES TOTAL PROJECT	SHEET No.	TOTAL SHEETS
03	Yub	70	R7.0/13.6	62	113

REGISTERED CIVIL ENGINEER DATE 7-26-10

7-26-10
PLANS APPROVAL DATE

REGISTERED PROFESSIONAL ENGINEER Jeffrey S. Jewett No. 49233 Exp. 9-30-10 CIVIL STATE OF CALIFORNIA

THE STATE OF CALIFORNIA OR ITS OFFICERS OR AGENTS SHALL NOT BE RESPONSIBLE FOR THE ACCURACY OR COMPLETENESS OF ELECTRONIC COPIES OF THIS PLAN SHEET.

PAVEMENT DELINEATION QUANTITIES

DESCRIPTION	4" THERMOPLASTIC TRAFFIC STRIPE				4" THERMOPLASTIC TRAFFIC STRIPE (BROKEN 17-7)	4" THERMOPLASTIC TRAFFIC STRIPE (BROKEN 36-12)		8" THERMOPLASTIC TRAFFIC STRIPE				PAVEMENT MARKER (RETROREFLECTIVE)			
	DETAIL NUMBER				DETAIL NUMBER	DETAIL NUMBER		DETAIL NUMBER				TYPE C (EA)	TYPE D (EA)	TYPE G (EA)	TYPE H (EA)
	22 (LF)	25 (LF)	25A (LF)	27B (LF)	9 (LF)	12 (LF)	14A (LF)	36 (LF)	36A (LF)	36B (LF)	38 (LF)				
EB MAINLINE ROUTE 70		26,219		26,047	1,004	23,867	1,296	2,006	1,676	264	211	36		712	547
WB MAINLINE ROUTE 70		26,164		26,956	686	25,185	1,296	3,064	792			36		624	546
EB EXIT RAMP TO McGOWAN PARKWAY			1,340	1,340											57
WB ENTRANCE RAMP FROM McGOWAN PARKWAY			1,380	1,370											59
EB ENTRANCE RAMP FROM McGOWAN PARKWAY			1,200	1,290											51
WB EXIT RAMP TO McGOWAN PARKWAY			1,170	1,170											50
WB EXIT RAMP TO ROUTE 65		600		630		615								14	14
EB ENTRANCE RAMP FROM ROUTE 65				1,000					1,000					43	
EB EXIT RAMP TO OLIVEHURST AVENUE			920	920											39
WB ENTRANCE RAMP FROM OLIVEHURST AVENUE	60		960	900									7		41
EB ENTRANCE RAMP FROM OLIVEHURST AVENUE			490	450											21
WB EXIT RAMP TO OLIVEHURST AVENUE			1,110	1,220							150			7	47
EB EXIT RAMP TO LINDHURST Ave			580	560											25
WB ENTRANCE RAMP FROM ERLE ROAD			860	900											37
EB ENTRANCE RAMP FROM LINDHURST Ave			280	250											13
WB EXIT RAMP TO ERLE ROAD			600	580											26
EB EXIT RAMP TO FEATHER RIVER Blvd	430		460	800							50		38	3	20
WB ENTRANCE RAMP FROM FEATHER RIVER Blvd			750	820				35						2	32
EB ENTRANCE RAMP FROM FEATHER RIVER Blvd			430	850				45						3	19
WB EXIT RAMP TO FEATHER RIVER Blvd			730	780					60					4	31
WB EXIT RAMP TO NORTH BEALE ROAD			1,140	1,310											49
EB EXIT RAMP TO NORTH BEALE ROAD			90	120											5
EB ENTRANCE RAMP FROM NORTH BEALE ROAD			360	380											16
SUBTOTAL	490	52,983	14,850	70,643	1,690	49,667	2,592	5,150	3,528	264	411	72	45	1,412	1,745
TOTAL	138,966				1,690	52,259		9,353				3,274			

PAVEMENT DELINEATION QUANTITIES

PDQ-1

STATE OF CALIFORNIA - DEPARTMENT OF TRANSPORTATION
Caltrans
TRAFFIC

FUNCTIONAL SUPERVISOR: JOSEPH W. HORTON
CALCULATED-DESIGNED BY: JACK KEMMERLY
CHECKED BY: JEFF JEWETT
REVISED BY
DATE REVISED

LAST REVISION 4-30-10
DATE PLOTTED => 25-AUG-2010
TIME PLOTTED => 10:05

Dist	COUNTY	ROUTE	POST MILES TOTAL PROJECT	SHEET No.	TOTAL SHEETS
03	Yub	70	R7.0/13.6	63	113

REGISTERED CIVIL ENGINEER 7-26-10 DATE

7-26-10
PLANS APPROVAL DATE

REGISTERED PROFESSIONAL ENGINEER Jeffrey S Jewett No. 49233 Exp. 9-30-10 CIVIL STATE OF CALIFORNIA

THE STATE OF CALIFORNIA OR ITS OFFICERS OR AGENTS SHALL NOT BE RESPONSIBLE FOR THE ACCURACY OR COMPLETENESS OF ELECTRONIC COPIES OF THIS PLAN SHEET.

PAVEMENT MARKING QUANTITIES

DESCRIPTION	THERMOPLASTIC PAVEMENT MARKING											
	TYPE I (24') ARROW (SQFT)	TYPE II ARROW (SQFT)	TYPE III ARROW (SQFT)	TYPE V ARROW (SQFT)	TYPE VI ARROW (SQFT)	SIGNAL (SQFT)	STOP (SQFT)	AHEAD (SQFT)	LIMIT LINE (SQFT)	CROSSWALK (SQFT)	12" CHEVRON (WHITE) (SQFT)	SUBTOTAL (SQFT)
EB MAINLINE ROUTE 70				132	126	64		62				384
EB EXIT RAMP TO McGOWAN PARKWAY				66			66	31	58			221
WB ENTRANCE RAMP FROM McGOWAN PARKWAY	31											31
EB ENTRANCE RAMP FROM McGOWAN PARKWAY	62											62
WB EXIT RAMP TO McGOWAN PARKWAY		45	42	33			66	31		152		369
EB ENTRANCE RAMP FROM ROUTE 65				132							180	312
EB EXIT RAMP TO OLIVEHURST AVENUE				66								66
WB ENTRANCE RAMP FROM OLIVEHURST AVENUE	62											62
EB ENTRANCE RAMP FROM OLIVEHURST AVENUE	31											31
WB EXIT RAMP TO OLIVEHURST AVENUE				99			44	31	20			194
EB EXIT RAMP TO LINDHURST Ave				66			44	31		74		215
WB ENTRANCE RAMP FROM ERLE ROAD	31											31
EB ENTRANCE RAMP FROM LINDHURST Ave	31									74		105
WB EXIT RAMP TO ERLE ROAD				132			66	31		154		383
EB EXIT RAMP TO FEATHER RIVER Blvd				132			66	31	45			274
WB ENTRANCE RAMP FROM FEATHER RIVER Blvd	62											62
EB ENTRANCE RAMP FROM FEATHER RIVER Blvd	31											31
WB EXIT RAMP TO FEATHER RIVER Blvd	62											62
WB EXIT RAMP TO NORTH BEALE ROAD				99			22		24			145
EB EXIT RAMP TO NORTH BEALE ROAD				66								66
EB ENTRANCE RAMP FROM NORTH BEALE ROAD	31											31
TOTAL												3,137

PAVEMENT DELINEATION QUANTITIES

PDQ-2

STATE OF CALIFORNIA - DEPARTMENT OF TRANSPORTATION
Caltrans
TRAFFIC

FUNCTIONAL SUPERVISOR: JOSEPH W. HORTON
CALCULATED-DESIGNED BY: JACK KEMMERLY
CHECKED BY: JEFF JEWETT
REVISED BY
DATE REVISED

LAST REVISION 6-15-10
DATE PLOTTED => 25-AUG-2010
TIME PLOTTED => 10:05

Dist	COUNTY	ROUTE	POST MILES TOTAL PROJECT	SHEET No.	TOTAL SHEETS
03	Yub	70	R7.0/13.6	64	113

REGISTERED CIVIL ENGINEER 7-26-10 DATE

7-26-10
PLANS APPROVAL DATE

REGISTERED PROFESSIONAL ENGINEER Jeffrey S. Jewett No. 49233 Exp. 9-30-10 CIVIL STATE OF CALIFORNIA

THE STATE OF CALIFORNIA OR ITS OFFICERS OR AGENTS SHALL NOT BE RESPONSIBLE FOR THE ACCURACY OR COMPLETENESS OF ELECTRONIC COPIES OF THIS PLAN SHEET.

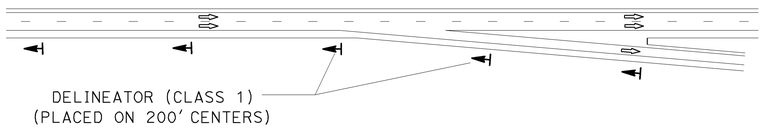

EXIT RAMP DELINEATOR PLACEMENT (TYPICAL)

NO SCALE

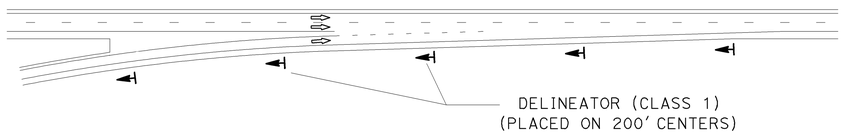

ENTRANCE RAMP DELINEATOR PLACEMENT (TYPICAL)

NO SCALE

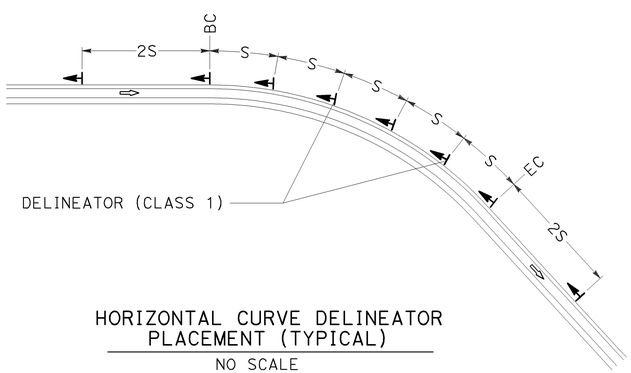

HORIZONTAL CURVE DELINEATOR PLACEMENT (TYPICAL)

NO SCALE

LEGEND

S DELINEATOR SPACING (TO BE PROVIDED BY THE ENGINEER)

⇨ DIRECTION OF TRAVEL

DELINEATOR - OBJECT MARKER - HIGHWAY POST MARKER

DESCRIPTION	DELINEATOR (CLASS 1)		OBJECT MARKER TYPE L-1 (EACH)	HIGHWAY POST MARKER (EACH)
	TYPE F (EACH)	TYPE G (EACH)		
EB MAINLINE ROUTE 70	17	5	5	12
WB MAINLINE ROUTE 70	20		6	12
EB EXIT RAMP TO McGOWAN PARKWAY	12			
WB ENTRANCE RAMP FROM McGOWAN PARKWAY	12			
EB ENTRANCE RAMP FROM McGOWAN PARKWAY	11			
WB EXIT RAMP TO McGOWAN PARKWAY	11			
WB EXIT RAMP TO ROUTE 65	6		1	
EB ENTRANCE RAMP FROM ROUTE 65	7			
EB EXIT RAMP TO OLIVEHURST AVENUE	9			
WB ENTRANCE RAMP FROM OLIVEHURST AVENUE	7			
EB ENTRANCE RAMP FROM OLIVEHURST AVENUE	6	14		
WB EXIT RAMP TO OLIVEHURST AVENUE	11			
EB EXIT RAMP TO LINDHURST Ave	6	9		
WB ENTRANCE RAMP FROM ERLE ROAD	14	5		
EB ENTRANCE RAMP FROM LINDHURST Ave	7	8		
WB EXIT RAMP TO ERLE ROAD	5	7		
EB EXIT RAMP TO FEATHER RIVER Blvd	16	8		
WB ENTRANCE RAMP FROM FEATHER RIVER Blvd	5			
EB ENTRANCE RAMP FROM FEATHER RIVER Blvd	5	8		
WB EXIT RAMP TO FEATHER RIVER Blvd	7	7		
WB EXIT RAMP TO NORTH BEALE ROAD	15	3		
EB EXIT RAMP TO NORTH BEALE ROAD	5	4		
EB ENTRANCE RAMP FROM NORTH BEALE ROAD	4			
SUBTOTAL	218	78	12	24
TOTAL	296		12	24

NOTES:

1. HIGHWAY POST MARKER TARGET PLATE INFORMATION TO BE PROVIDED BY THE ENGINEER.
2. EXACT LOCATION OF DELINEATORS, OBJECT MARKERS AND HIGHWAY POST MARKERS TO BE DETERMINED BY THE ENGINEER.

PAVEMENT DELINEATION QUANTITIES

PDQ-3

STATE OF CALIFORNIA - DEPARTMENT OF TRANSPORTATION
Caltrans
TRAFFIC

FUNCTIONAL SUPERVISOR: JOSEPH W. HORTON
CALCULATED-DESIGNED BY: JACK KEMMERLY
CHECKED BY: JEFF JEWETT
REVISED BY
DATE REVISED

LAST REVISION 6-23-10
DATE PLOTTED => 25-AUG-2010
TIME PLOTTED => 10:05

Dist	COUNTY	ROUTE	POST MILES TOTAL PROJECT	SHEET No.	TOTAL SHEETS
03	Yub	70	R7.0/13.6	65	113

REGISTERED CIVIL ENGINEER DATE 7-26-10

7-26-10
PLANS APPROVAL DATE

REGISTERED PROFESSIONAL ENGINEER Jeffrey S Jewett No. 49233 Exp. 9-30-10 CIVIL STATE OF CALIFORNIA

THE STATE OF CALIFORNIA OR ITS OFFICERS OR AGENTS SHALL NOT BE RESPONSIBLE FOR THE ACCURACY OR COMPLETENESS OF ELECTRONIC COPIES OF THIS PLAN SHEET.

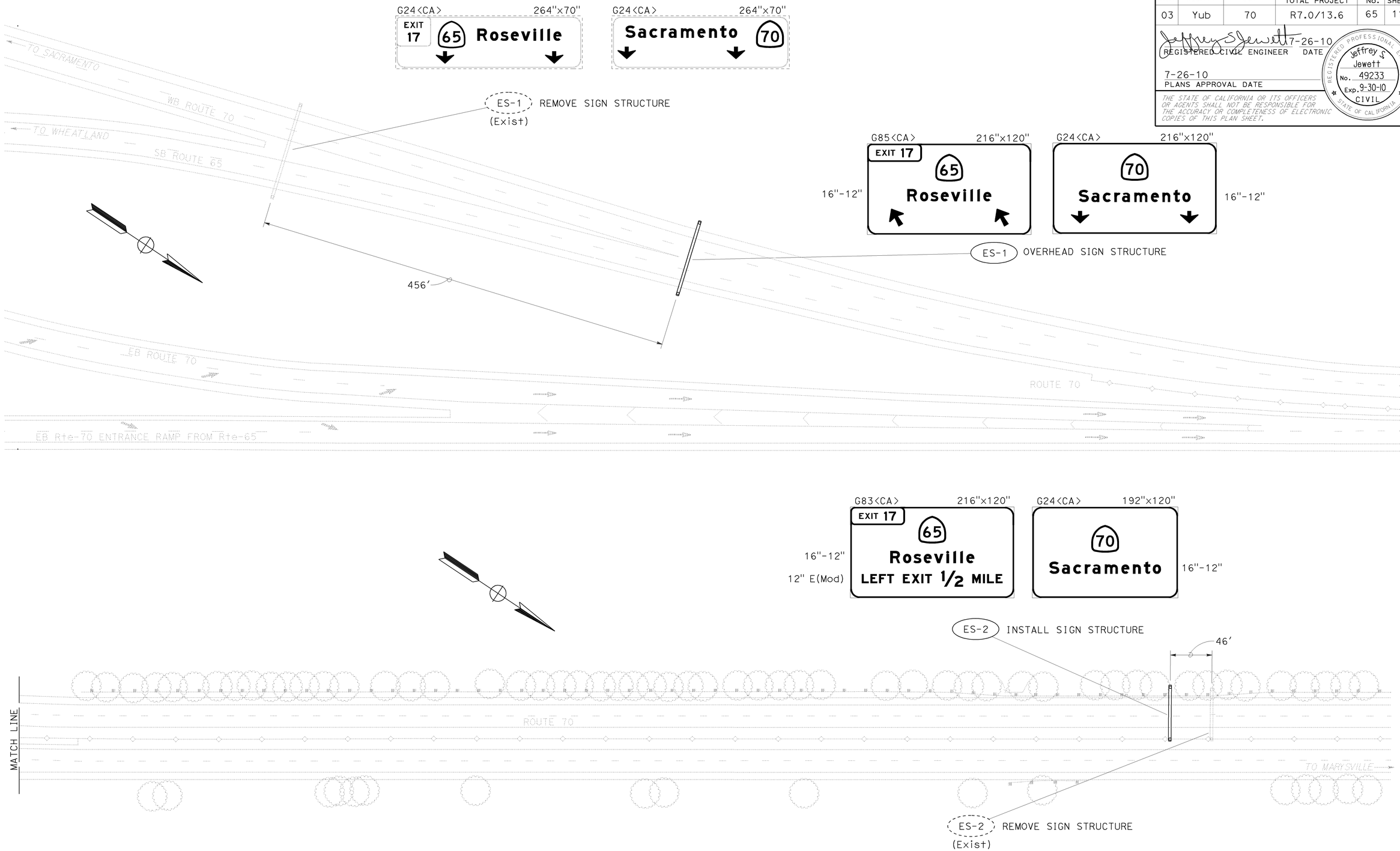

LEGEND

No.	OVERHEAD SIGN NUMBER
<CA>	CALIFORNIA SIGN CODE

NOTE: THIS PLAN ACCURATE FOR SIGNING WORK ONLY.

SIGN PLAN

SCALE: 1"=50'

S-1

REVISED BY	DATE REVISED

CALCULATED-DESIGNED BY: JACK KEMMERLY
CHECKED BY: JEFF JEWETT
FUNCTIONAL SUPERVISOR: JOSEPH W. HORTON

STATE OF CALIFORNIA - DEPARTMENT OF TRANSPORTATION
Caltrans
TRAFFIC

LAST REVISION 6-22-10
DATE PLOTTED => 25-AUG-2010
TIME PLOTTED => 10:05

Dist	COUNTY	ROUTE	POST MILES TOTAL PROJECT	SHEET No.	TOTAL SHEETS
03	Yub	70	R7.0/13.6	66	113

REGISTERED CIVIL ENGINEER DATE 7-26-10

7-26-10
PLANS APPROVAL DATE

REGISTERED PROFESSIONAL ENGINEER Jeffrey S Jewett No. 49233 Exp. 9-30-10 CIVIL STATE OF CALIFORNIA

THE STATE OF CALIFORNIA OR ITS OFFICERS OR AGENTS SHALL NOT BE RESPONSIBLE FOR THE ACCURACY OR COMPLETENESS OF ELECTRONIC COPIES OF THIS PLAN SHEET.

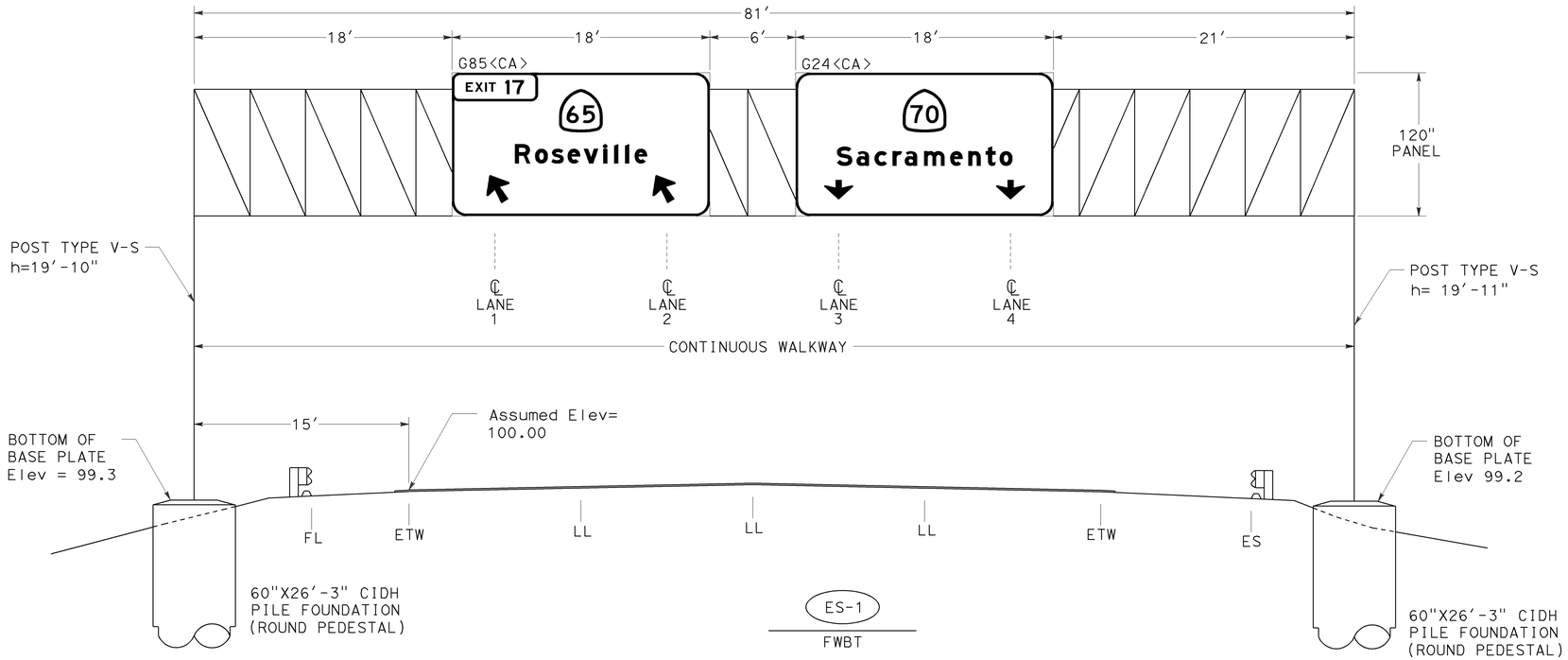

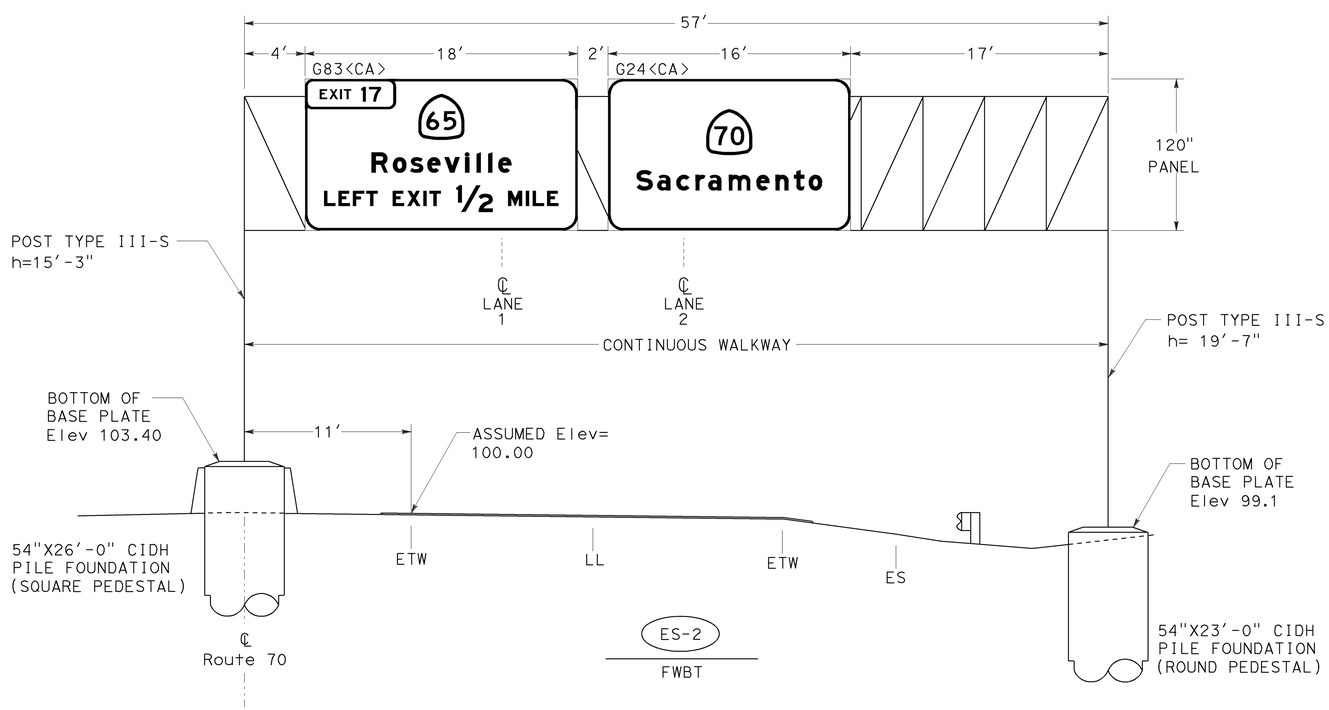

NOTES:

1. LL = LANELINE
2. h = DISTANCE FROM BOTTOM OF FRAME TO BOTTOM OF BASE PLATE.
3. OVERHEAD SIGN PANELS SHALL BE LAMINATED PANELS TYPE A.

SIGN DETAILS

NO SCALE

SD-1

STATE OF CALIFORNIA - DEPARTMENT OF TRANSPORTATION
TRAFFIC
Caltrans

FUNCTIONAL SUPERVISOR: JOSEPH W. HORTON
CALCULATED-DESIGNED BY: JACK KEMMERLY
CHECKED BY: JEFF JEWETT
REVISED BY
DATE REVISED

LAST REVISION 6-9-10
DATE PLOTTED => 25-AUG-2010
TIME PLOTTED => 10:06

Dist	COUNTY	ROUTE	POST MILES TOTAL PROJECT	SHEET No.	TOTAL SHEETS
03	Yub	70	R7.0/13.6	67	113

REGISTERED CIVIL ENGINEER DATE 7-26-10

7-26-10
PLANS APPROVAL DATE

REGISTERED PROFESSIONAL ENGINEER Jeffrey S Jewett No. 49233 Exp. 9-30-10 CIVIL STATE OF CALIFORNIA

THE STATE OF CALIFORNIA OR ITS OFFICERS OR AGENTS SHALL NOT BE RESPONSIBLE FOR THE ACCURACY OR COMPLETENESS OF ELECTRONIC COPIES OF THIS PLAN SHEET.

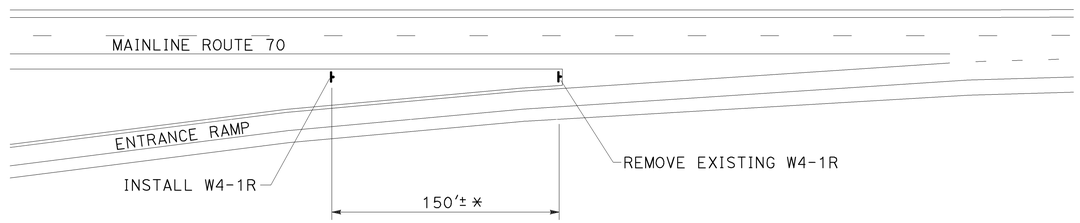

ENTRANCE RAMP SIGNING (TYPICAL)

* - REDUCE SPACING TO 20'± FOR THE EB ENTRANCE RAMP FROM NORTH BEALE ROAD.

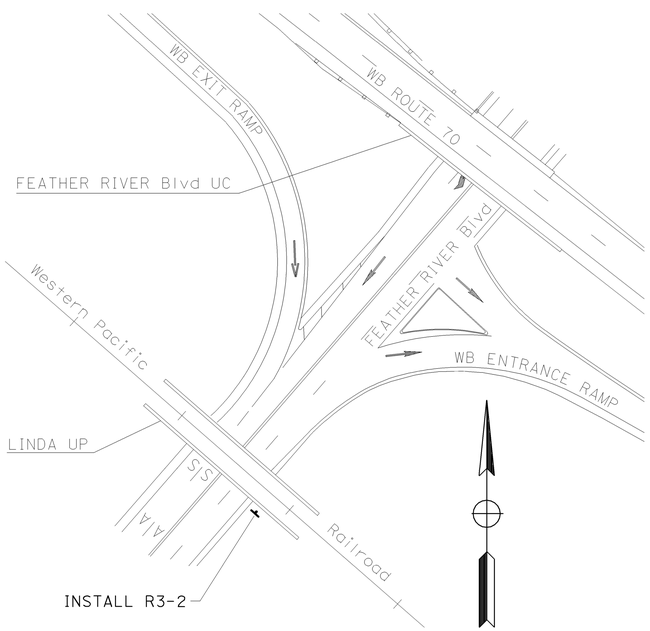

DETAIL A

WB EXIT RAMP TO FEATHER RIVER Blvd

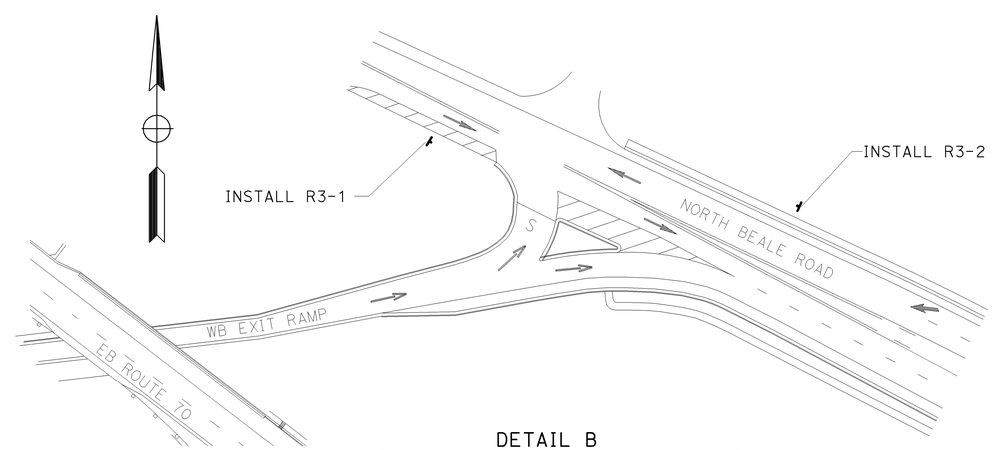

DETAIL B

WB EXIT RAMP TO NORTH BEALE ROAD

SIGN DETAILS

NO SCALE

SD-2

STATE OF CALIFORNIA - DEPARTMENT OF TRANSPORTATION

Caltrans

TRAFFIC

FUNCTIONAL SUPERVISOR: JOSEPH W. HORTON

CALCULATED-DESIGNED BY: JACK KEMMERLY

CHECKED BY: JEFF JEWETT

REVISED BY

DATE REVISED

LAST REVISION 4-28-10

DATE PLOTTED => 25-AUG-2010

TIME PLOTTED => 10:06

Dist	COUNTY	ROUTE	POST MILES TOTAL PROJECT	SHEET No.	TOTAL SHEETS
03	Yub	70	R7.0/13.6	68	113

REGISTERED CIVIL ENGINEER 7-26-10 DATE

7-26-10
PLANS APPROVAL DATE

REGISTERED PROFESSIONAL ENGINEER Jeffrey S Jewett No. 49233 Exp. 9-30-10 CIVIL STATE OF CALIFORNIA

THE STATE OF CALIFORNIA OR ITS OFFICERS OR AGENTS SHALL NOT BE RESPONSIBLE FOR THE ACCURACY OR COMPLETENESS OF ELECTRONIC COPIES OF THIS PLAN SHEET.

G85<CA> G70-2<CA>

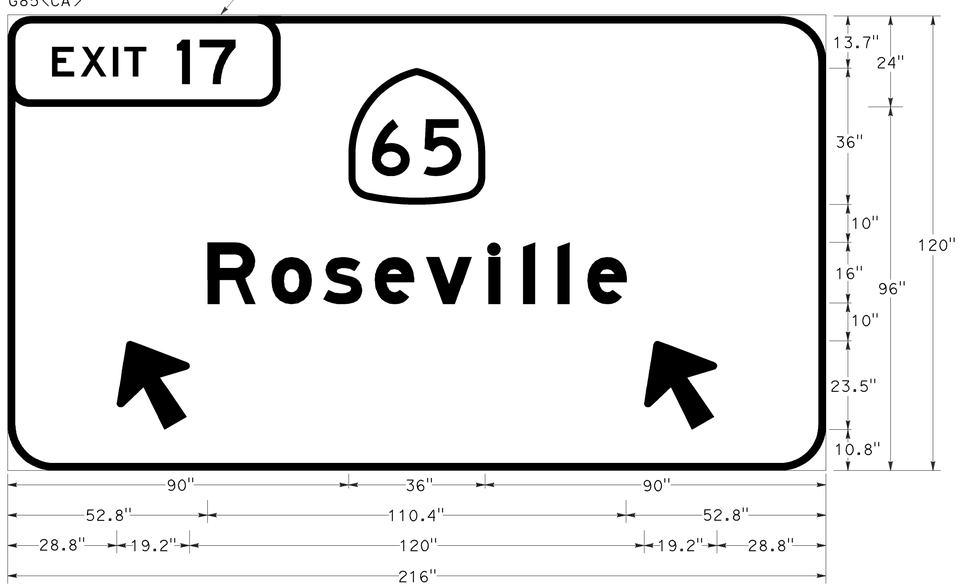

2" BORDER WITH 12" RADIUS
"Roseville" - E Mod
ARROWS - 16CAP-1L - 25", 120°

OVERHEAD SIGN NUMBER ES-1

G24<CA>

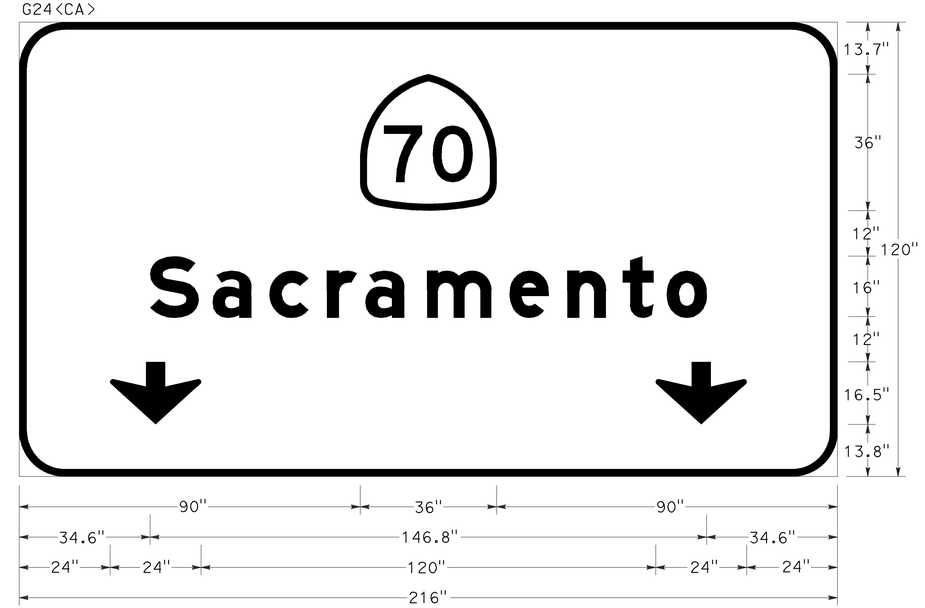

2" BORDER WITH 12" RADIUS
"Sacramento" - E Mod
DOWN ARROWS - 16", 270°

OVERHEAD SIGN NUMBER ES-1

SIGN DETAILS

NO SCALE

NOTE: ALL SIGN CODES ARE FEDERAL SIGN CODES UNLESS OTHERWISE DESIGNATED AS CALIFORNIA <CA> SIGN CODES.

SD-3

STATE OF CALIFORNIA - DEPARTMENT OF TRANSPORTATION
Caltrans
TRAFFIC

FUNCTIONAL SUPERVISOR: JOSEPH W. HORTON
CALCULATED-DESIGNED BY: JACK KEMMERLY
CHECKED BY: JEFF JEWETT
REVISED BY / DATE REVISED

LAST REVISION 5-20-10
DATE PLOTTED => 25-AUG-2010
TIME PLOTTED => 10:06

Dist	COUNTY	ROUTE	POST MILES TOTAL PROJECT	SHEET No.	TOTAL SHEETS
03	Yub	70	R7.0/13.6	69	113

Jeffrey S Jewett 7-26-10
REGISTERED CIVIL ENGINEER DATE

7-26-10
PLANS APPROVAL DATE

REGISTERED PROFESSIONAL ENGINEER
Jeffrey S. Jewett
No. 49233
Exp. 9-30-10
CIVIL
STATE OF CALIFORNIA

THE STATE OF CALIFORNIA OR ITS OFFICERS OR AGENTS SHALL NOT BE RESPONSIBLE FOR THE ACCURACY OR COMPLETENESS OF ELECTRONIC COPIES OF THIS PLAN SHEET.

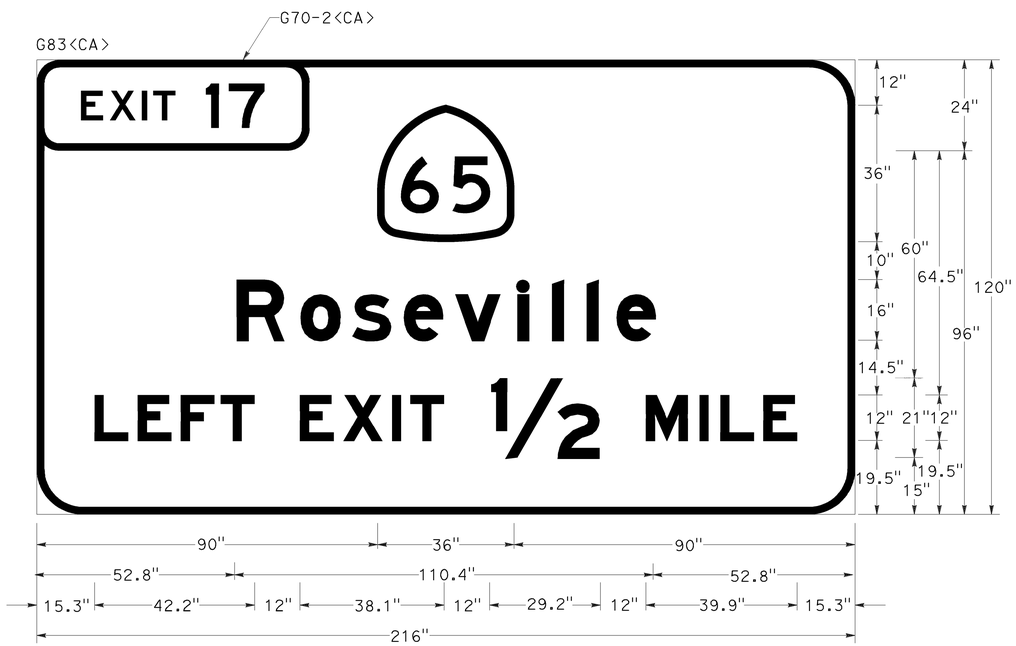

2" BORDER WITH 12" RADIUS
"Roseville" - E Mod
"LEFT EXIT 1/2 MILE" - E Mod

OVERHEAD SIGN NUMBER ES-2

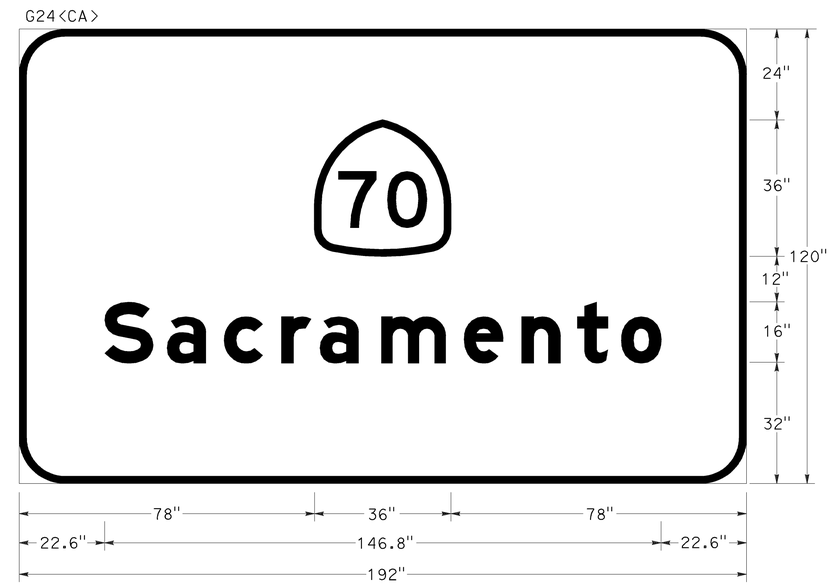

2" BORDER WITH 12" RADIUS
"Sacramento" - E Mod

OVERHEAD SIGN NUMBER ES-2

SIGN DETAILS

NO SCALE

SD-4

STATE OF CALIFORNIA - DEPARTMENT OF TRANSPORTATION
Caltrans
TRAFFIC

FUNCTIONAL SUPERVISOR: JOSEPH W. HORTON
CALCULATED-DESIGNED BY: JACK KEMMERLY
CHECKED BY: JEFF JEWETT
REVISED BY
DATE REVISED

LAST REVISION 5-20-10
DATE PLOTTED => 25-AUG-2010
TIME PLOTTED => 10:06

Dist	COUNTY	ROUTE	POST MILES TOTAL PROJECT	SHEET No.	TOTAL SHEETS
03	Yub	70	R7.0/13.6	70	113

REGISTERED CIVIL ENGINEER 7-26-10 DATE

7-26-10
PLANS APPROVAL DATE

REGISTERED PROFESSIONAL ENGINEER Jeffrey S. Jewett No. 49233 Exp. 9-30-10 CIVIL STATE OF CALIFORNIA

THE STATE OF CALIFORNIA OR ITS OFFICERS OR AGENTS SHALL NOT BE RESPONSIBLE FOR THE ACCURACY OR COMPLETENESS OF ELECTRONIC COPIES OF THIS PLAN SHEET.

ROADSIDE SIGN QUANTITIES

LOCATION	SIGN CODE		PANEL SIZE (INCHES)	"C" DIM IN FEET	POST SIZE AND LENGTH		ROADSIDE SIGN ONE POST (EACH)	REMOVE ROADSIDE SIGN (EACH)	RESET ROADSIDE SIGN (EACH)	REMARKS
	FEDERAL	CALIFORNIA			4" X 4"	6" X 6"				
EB EXIT RAMP TO McGOWAN PARKWAY		G84-3						1		
		G84-3	48 X 60	7		18′	1			EXIT 16
WB ENTRANCE RAMP FROM McGOWAN PARKWAY	W4-1R							1		
	W4-1R		48 X 48	7		18′	1			SEE NOTE 4
EB ENTRANCE RAMP FROM McGOWAN PARKWAY	W4-1R							1		
	W4-1R		48 X 48	7		18′	1			SEE NOTE 4
WB EXIT RAMP TO McGOWAN PARKWAY		G84-3						1		
		G84-3	48 X 60	7		18′	1			EXIT 16
WB ROUTE 70 (PM:8.78±)		G20 G66-56 G200-70 G86							1	
EB EXIT RAMP TO OLIVEHURST AVENUE		G84-3						1		
		G84-3	48 X 60	7		18′	1			EXIT 18A
WB ENTRANCE RAMP FROM OLIVEHURST AVENUE	W4-1R							1		
	W4-1R		48 X 48	7		18′	1			SEE NOTE 4
EB ENTRANCE RAMP FROM OLIVEHURST AVENUE	W4-1R							1		
	W4-1R		48 X 48	7		18′	1			SEE NOTE 4
WB EXIT RAMP TO OLIVEHURST AVENUE		G84-3						1		
		G84-3	48 X 60	7		18′	1			EXIT 18A
WB ROUTE 70 (PM:9.56±)		G85							1	
WB ROUTE 70 (PM:9.63±)		G9							1	
EB EXIT RAMP TO LINDHURST Ave		G84-3						1		
		G84-3	48 X 60	7		18′	1			EXIT 18B
WB ENTRANCE RAMP FROM ERLE ROAD	W4-1R							1		
	W4-1R		48 X 48	7		18′	1			SEE NOTE 4
EB ENTRANCE RAMP FROM LINDHURST Ave	W4-1R							1		
	W4-1R		48 X 48	7		18′	1			SEE NOTE 4
WB EXIT RAMP TO ERLE ROAD		G84-3						1		
		G84-3	48 X 60	7		18′	1			EXIT 18B
SHEET TOTAL							12	12	3	————

NOTES:

1. EXACT LOCATION AND POSITION OF ROADSIDE SIGNS TO BE DETERMINED BY THE ENGINEER.
2. POST LENGTHS GIVEN ARE APPROXIMATE.
3. "C" DIM = VERTICAL CLEARANCE EP TO BOTTOM OF SIGN PANEL.
4. FOR ADDITIONAL SIGN LOCATION INFORMATION, SEE "ENTRANCE RAMP SIGNING" DETAIL ON SHEET SD-2.
5. FOR ADDITIONAL SIGN LOCATION INFORMATION, SEE "DETAIL A" ON SHEET SD-2.
6. FOR ADDITIONAL SIGN LOCATION INFORMATION, SEE "DETAIL B" ON SHEET SD-2.

SIGN QUANTITIES

SQ-1

REVISED BY | DATE REVISED
JACK KEMMERLY | JEFF JEWETT
CALCULATED-DESIGNED BY | CHECKED BY
FUNCTIONAL SUPERVISOR: JOSEPH W. HORTON
STATE OF CALIFORNIA - DEPARTMENT OF TRANSPORTATION
Caltrans
TRAFFIC

LAST REVISION 6-22-10 | DATE PLOTTED => 25-AUG-2010 | TIME PLOTTED => 10:06

Dist	COUNTY	ROUTE	POST MILES TOTAL PROJECT	SHEET No.	TOTAL SHEETS
03	Yub	70	R7.0/13.6	71	113

REGISTERED CIVIL ENGINEER 7-26-10 DATE

7-26-10
PLANS APPROVAL DATE

REGISTERED PROFESSIONAL ENGINEER Jeffrey S. Jewett No. 49233 Exp. 9-30-10 CIVIL STATE OF CALIFORNIA

THE STATE OF CALIFORNIA OR ITS OFFICERS OR AGENTS SHALL NOT BE RESPONSIBLE FOR THE ACCURACY OR COMPLETENESS OF ELECTRONIC COPIES OF THIS PLAN SHEET.

ROADSIDE SIGN QUANTITIES (CONTINUED)

LOCATION	SIGN CODE FEDERAL	SIGN CODE CALIFORNIA	PANEL SIZE (INCHES)	"C" DIM IN FEET	POST SIZE AND LENGTH 4" X 4"	POST SIZE AND LENGTH 6" X 6"	ROADSIDE SIGN ONE POST (EACH)	REMOVE ROADSIDE SIGN (EACH)	RESET ROADSIDE SIGN (EACH)	REMARKS
EB EXIT RAMP TO FEATHER RIVER Blvd		G84-3						1		
		G84-3	48 X 60	7		18′	1			EXIT 20A
WB ENTRANCE RAMP FROM FEATHER RIVER Blvd	W4-1R							1		
	W4-1R		48 X 48	7		18′	1			SEE NOTE 4
EB ENTRANCE RAMP FROM FEATHER RIVER Blvd	W4-1R							1		
	W4-1R		48 X 48	7		18′	1			SEE NOTE 4
WB EXIT RAMP TO FEATHER RIVER Blvd		G84-3						1		
		G84-3	48 X 60	7		18′	1			EXIT 20A
	R3-2		24 X 24	7	14′		1			SEE NOTE 5
WB EXIT RAMP TO NORTH BEALE ROAD		G84-3						1		
		G84-3	48 X 60	7		18′	1			EXIT 20B
	R3-1		24 X 24	7	14′		1			SEE NOTE 6
	R3-2		24 X 24	7	14′		1			SEE NOTE 6
EB EXIT RAMP TO NORTH BEALE ROAD		G84-3						1		
		G84-3	48 X 60	7		18′	1			EXIT 20B
EB ENTRANCE RAMP FROM NORTH BEALE ROAD	W4-1R							1		
	W4-1R		48 X 48	7		18′	1			SEE NOTE 4
SHEET TOTAL							10	7	0	———
SHEET TOTAL FROM SQ-1							12	12	3	———
TOTAL							22	19	3	———

OVERHEAD SIGN QUANTITIES

SIGN NUMBER	REMOVE SIGN STRUCTURE	FURNISH SIGN STRUCTURE (TRUSS)	INSTALL SIGN STRUCTURE (TRUSS)	54" CIDH CONCRETE PILE (SIGN FOUNDATION)	60" CIDH CONCRETE PILE (SIGN FOUNDATION)
	EA	LB	LB	LF	LF
ES-1 (Exist)	1				
ES-1		34,162	34,162		52.50
ES-2 (Exist)	1				
ES-2		23,036	23,036	49.00	
TOTAL	2	57,198	57,198	49.00	52.50

SIGN QUANTITIES

SQ-2

STATE OF CALIFORNIA - DEPARTMENT OF TRANSPORTATION
Caltrans
TRAFFIC

FUNCTIONAL SUPERVISOR: JOSEPH W. HORTON
CALCULATED-DESIGNED BY: JACK KEMMERLY
CHECKED BY: JEFF JEWETT
REVISED BY / DATE REVISED

LAST REVISION 6-22-10
DATE PLOTTED => 25-AUG-2010
TIME PLOTTED => 10:06

Dist	COUNTY	ROUTE	POST MILES TOTAL PROJECT	SHEET No.	TOTAL SHEETS
03	Yub	70	R7.0/13.6	72	113

REGISTERED CIVIL ENGINEER 7-26-10 DATE

7-26-10
PLANS APPROVAL DATE

REGISTERED PROFESSIONAL ENGINEER Jeffrey S. Jewett No. 49233 Exp. 9-30-10 CIVIL STATE OF CALIFORNIA

THE STATE OF CALIFORNIA OR ITS OFFICERS OR AGENTS SHALL NOT BE RESPONSIBLE FOR THE ACCURACY OR COMPLETENESS OF ELECTRONIC COPIES OF THIS PLAN SHEET.

ROADSIDE SIGN PANEL QUANTITIES (CONTRACTOR-FURNISHED)

SIGN CODE	SIGN MESSAGE/DESCRIPTION	SIGN SIZE L X D (INCHES)	SIGN AREA (SQFT)	NUMBER OF SIGNS	BACKGROUND SHEETING COLOR	BACKGROUND RETROREFLECTIVE ASTM TYPE	LEGEND SHEETING COLOR	LEGEND RETROREFLECTIVE ASTM TYPE	PROTECTIVE OVERLAY PREMIUM	FURNISH SINGLE SHEET ALUMINUM SIGN UNFRAMED 0.063" SQFT	FURNISH SINGLE SHEET ALUMINUM SIGN UNFRAMED 0.080" SQFT
G84-3<CA>	EXIT 16 WITH ARROW	48 X 60	20.00	2	GREEN	III	WHITE	III	X		40.00
G84-3<CA>	EXIT 18A WITH ARROW	48 X 60	20.00	2	GREEN	III	WHITE	III	X		40.00
G84-3<CA>	EXIT 18B WITH ARROW	48 X 60	20.00	2	GREEN	III	WHITE	III	X		40.00
G84-3<CA>	EXIT 20A WITH ARROW	48 X 60	20.00	2	GREEN	III	WHITE	III	X		40.00
G84-3<CA>	EXIT 20B WITH ARROW	48 X 60	20.00	2	GREEN	III	WHITE	III	X		40.00
R3-1	NO RIGHT TURN SYMBOL SIGN	24 X 24	4.00	1	WHITE	IX	BLACK RED	 IX	X	4.00	
R3-2	NO LEFT TURN SYMBOL SIGN	24 X 24	4.00	2	WHITE	IX	BLACK RED	 IX	X	8.00	
W4-1R	MERGE SYMBOL SIGN	48 X 48	16.00	9	YELLOW	IX	BLACK				144.00
TOTAL										12.00	344.00

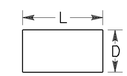

L = LENGTH OF SIGN
D = DEPTH OF SIGN

NOTES:

1. CALIFORNIA SIGN CODES ARE DESIGNATED BY <CA>. OTHERWISE, FEDERAL SIGN CODES ARE SHOWN.
2. FOR "SIGN MESSAGE/DESCRIPTION" INFORMATION FOR THE OVERHEAD PANELS, SEE SIGN PLANS.
3. ALL OVERHEAD SIGN PANELS SHALL BE LAMINATED PANELS - TYPE A.

OVERHEAD SIGN PANEL QUANTITIES (CONTRACTOR-FURNISHED)

SIGN CODE	OVERHEAD SIGN NUMBER	SIGN SIZE L X D (INCHES)	SIGN AREA (SQFT)	NUMBER OF SIGNS	BACKGROUND SHEETING COLOR	BACKGROUND RETROREFLECTIVE ASTM TYPE	LEGEND SHEETING COLOR	LEGEND RETROREFLECTIVE ASTM TYPE	PROTECTIVE OVERLAY PREMIUM	FURNISH LAMINATED PANEL SIGN (1"-TYPE A) SQFT
G24<CA>	ES-1	216 X 120	180.00	1	GREEN	IV	WHITE	IX	X	180.00
G24<CA>	ES-2	216 X 120	180.00	1	GREEN	IV	WHITE	IX	X	180.00
G83<CA>	ES-2	192 X 120	160.00	1	GREEN	IV	WHITE	IX	X	160.00
G85<CA>	ES-1	216 X 120	180.00	1	GREEN	IV	WHITE	IX	X	180.00
TOTAL										700.00

SIGN QUANTITIES

SQ-3

REVISED BY | DATE REVISED
JACK KEMMERLY | JEFF JEWETT
CALCULATED-DESIGNED BY | CHECKED BY
FUNCTIONAL SUPERVISOR: JOSEPH W. HORTON

STATE OF CALIFORNIA - DEPARTMENT OF TRANSPORTATION
Caltrans
TRAFFIC

LAST REVISION 6-15-10 | DATE PLOTTED => 25-AUG-2010 | TIME PLOTTED => 10:06

Dist	COUNTY	ROUTE	POST MILES TOTAL PROJECT	SHEET No.	TOTAL SHEETS
03	Yub	70	R7.0/13.6	73	113

REGISTERED CIVIL ENGINEER 7-26-10 DATE

7-26-10
PLANS APPROVAL DATE

REGISTERED PROFESSIONAL ENGINEER ERIC NORMAN SOUZA No. 75706 Exp. 06-30-12 CIVIL STATE OF CALIFORNIA

THE STATE OF CALIFORNIA OR ITS OFFICERS OR AGENTS SHALL NOT BE RESPONSIBLE FOR THE ACCURACY OR COMPLETENESS OF SCANNED COPIES OF THIS PLAN SHEET.

COLD PLANE AC PAVEMENT

LOCATION	(0.10' Max)	(0.20' Max)	(0.30' Max)	(0.35' Max)	(0.40' Max)	(0.45' Max)
	SQYD	SQYD	SQYD	SQYD	SQYD	SQYD
EB ROUTE 70 PM R7.0 TO 13.6	54,968	12,038		56,811		13,288
WB ROUTE 70 PM R7.0 TO 13.6	56,669	15,741		54,160		8,441
EB OFF RAMP TO OLIVEHURST Ave					1,940	
EB ON RAMP FROM OLIVEHURST Ave					952	
EB OFF RAMP TO FEATHER RIVER Blvd					1,788	
EB ON RAMP FROM FEATHER RIVER Blvd					1,382	
EB OFF RAMP TO NORTH BEALE Rd			619			
EB ON RAMP FROM NORTH BEALE Rd			845			
WB ON RAMP FROM OLIVEHURST Ave					1,715	
WB OFF RAMP TO OLIVEHURST Ave					2,530	
WB ON RAMP FROM FEATHER RIVER Blvd					1,464	
WB OFF RAMP TO FEATHER RIVER Blvd					1,564	
WB OFF RAMP TO NORTH BEALE Rd			3,049			
SUBTOTAL	111,637	27,779	4,513	110,971	13,335	21,729
TOTAL	289,964					

RUBBERIZED WARM MIX ASPHALT (OPEN GRADED)

LOCATION	TON
EB ROUTE 70 PM R7.0 TO 13.6	6,662
WB ROUTE 70 PM R7.0 TO 13.6	6,749
EB OFF RAMP TO McGOWAN PARKWAY	253
EB ON RAMP FROM McGOWAN PARKWAY	267
EB OFF RAMP TO OLIVEHURST Ave	125
EB ON RAMP FROM OLIVEHURST Ave	65
EB OFF RAMP TO LINDHURST Ave	118
EB ON RAMP FROM LINDHURST Ave	95
EB OFF RAMP TO FEATHER RIVER Blvd	106
EB ON RAMP FROM FEATHER RIVER Blvd	81
EB OFF RAMP TO NORTH BEALE Rd	43
EB ON RAMP FROM NORTH BEALE Rd	53
WB ON RAMP FROM McGOWAN PARKWAY	310
WB OFF RAMP TO McGOWAN PARKWAY	231
WB ON RAMP FROM OLIVEHURST Ave	131
WB OFF RAMP TO OLIVEHURST Ave	132
WB ON RAMP FROM ERLE Rd	269
WB OFF RAMP TO ERLE Rd	162
WB ON RAMP FROM FEATHER RIVER Blvd	99
WB OFF RAMP TO FEATHER RIVER Blvd	87
WB OFF RAMP TO NORTH BEALE Rd	162
TOTAL	16,200

CRACK TREATMENT

LOCATION	LANE MILE
EB ROUTE 70	9.9
WB ROUTE 70	9.9
ALL RAMPS	3.8
TOTAL	23.6

TACK COAT

LOCATION	FOR HMA (TON)	FOR RWMA-O (TON)
EB ROUTE 70 PM R7.0 TO 13.6	19.98	17.01
WB ROUTE 70 PM R7.0 TO 13.6	20.17	17.23
EB OFF RAMP TO McGOWAN PARKWAY	0.73	0.64
EB ON RAMP FROM McGOWAN PARKWAY	0.64	0.68
EB OFF RAMP TO OLIVEHURST Ave	0.33	0.32
EB ON RAMP FROM OLIVEHURST Ave	0.16	0.17
EB OFF RAMP TO LINDHURST Ave	0.36	0.30
EB ON RAMP FROM LINDHURST Ave	0.24	0.24
EB OFF RAMP TO FEATHER RIVER Blvd	0.30	0.27
EB ON RAMP FROM FEATHER RIVER Blvd	0.24	0.21
EB OFF RAMP TO NORTH BEALE Rd	0.11	0.11
EB ON RAMP FROM NORTH BEALE Rd	0.14	0.13
WB ON RAMP FROM McGOWAN PARKWAY	0.80	0.79
WB OFF RAMP TO McGOWAN PARKWAY	0.74	0.59
WB ON RAMP FROM OLIVEHURST Ave	0.29	0.33
WB OFF RAMP TO OLIVEHURST Ave	0.44	0.34
WB ON RAMP FROM ERLE Rd	0.53	0.68
WB OFF RAMP TO ERLE Rd	0.55	0.41
WB ON RAMP FROM FEATHER RIVER Blvd	0.25	0.25
WB OFF RAMP TO FEATHER RIVER Blvd	0.25	0.22
WB OFF RAMP TO NORTH BEALE Rd	0.53	0.41
SUBTOTAL	47.78	41.34
TOTAL	89.12	

HMA

LOCATION	TON
EB ROUTE 70 PM R7.0 TO 13.6	28,400
WB ROUTE 70 PM R7.0 TO 13.6	28,559
EB OFF RAMP TO McGOWAN PARKWAY	628
EB ON RAMP FROM McGOWAN PARKWAY	551
EB OFF RAMP TO OLIVEHURST Ave	285
EB ON RAMP FROM OLIVEHURST Ave	140
EB OFF RAMP TO LINDHURST Ave	311
EB ON RAMP FROM LINDHURST Ave	211
EB OFF RAMP TO FEATHER RIVER Blvd	263
EB ON RAMP FROM FEATHER RIVER Blvd	203
EB OFF RAMP TO NORTH BEALE Rd	91
EB ON RAMP FROM NORTH BEALE Rd	120
WB ON RAMP FROM McGOWAN PARKWAY	688
WB OFF RAMP TO McGOWAN PARKWAY	635
WB ON RAMP FROM OLIVEHURST Ave	252
WB OFF RAMP TO OLIVEHURST Ave	378
WB ON RAMP FROM ERLE Rd	455
WB OFF RAMP TO ERLE Rd	473
WB ON RAMP FROM FEATHER RIVER Blvd	220
WB OFF RAMP TO FEATHER RIVER Blvd	219
WB OFF RAMP TO NORTH BEALE Rd	454
TOTAL	63,536

IMPORTED MATERIAL (SHOULDER BACKING)

LOCATION	TON
EB ROUTE 70 PM R7.0 TO 13.6	3,863
WB ROUTE 70 PM R7.0 TO 13.6	3,892
EB OFF RAMP TO McGOWAN PARKWAY	144
EB ON RAMP FROM McGOWAN PARKWAY	122
EB OFF RAMP TO LINDHURST Ave	150
EB ON RAMP FROM LINDHURST Ave	55
WB ON RAMP FROM McGOWAN PARKWAY	147
WB OFF RAMP TO McGOWAN PARKWAY	159
WB ON RAMP FROM ERLE Rd	164
WB OFF RAMP TO ERLE Rd	153
WB OFF RAMP TO NORTH BEALE Rd	45
TOTAL	8,894

TEMPORARY FENCE (TYPE ESA)

SHEET NUMBER	LOCATION	LF
C-8	EB ROUTE 70 (PM R10.88 TO R11.06 Rt)	978.7
C-9	EB ROUTE 70 (PM R11.37 Rt)	221.2
	TOTAL	1,199.9

SUMMARY OF QUANTITIES

Q-1

REVISED BY | DATE REVISED
JOSE L. VALDEZ | ERIC SOUZA
CALCULATED-DESIGNED BY | CHECKED BY
FUNCTIONAL SUPERVISOR: KEVIN ESPINOZA
STATE OF CALIFORNIA - DEPARTMENT OF TRANSPORTATION
Caltrans PROJECT DEVELOPMENT

LAST REVISION 05/18/10 | DATE PLOTTED => 25-AUG-2010 | TIME PLOTTED => 10:06

Dist	COUNTY	ROUTE	POST MILES TOTAL PROJECT	SHEET No.	TOTAL SHEETS
03	Yub	70	R7.0/13.6	74	113

REGISTERED CIVIL ENGINEER 7-26-10 DATE

7-26-10
PLANS APPROVAL DATE

REGISTERED PROFESSIONAL ENGINEER ERIC NORMAN SOUZA No. 75706 Exp. 06-30-12 CIVIL STATE OF CALIFORNIA

THE STATE OF CALIFORNIA OR ITS OFFICERS OR AGENTS SHALL NOT BE RESPONSIBLE FOR THE ACCURACY OR COMPLETENESS OF SCANNED COPIES OF THIS PLAN SHEET.

NOTES:

1. Lt OR Rt DENOTES SIDE OF HIGHWAY, RAMP OR ROAD IN THE DIRECTION OF TRAVEL (NB, SB, WB, EB).
2. MINOR CONCRETE (MINOR STRUCTURE) ITEM IS FOR NEW CONCRETE ANCHOR BLOCK FOR TRANSITION RAILING CONNECTION.
3. REMOVE CONCRETE ITEM IS FOR REMOVING EXISTING CONCRETE ANCHOR BLOCKS. SEE SHEET Q-4.
4. SPECIAL POST FOOTINGS REQUIRED WHERE Std EMBEDMENT OF MBGR POST IS RESTRICTED. SEE SHEET C-23.

METAL BEAM GUARD RAILING

LOCATION (PM TO PM)	DIRECTION	Lt/Rt	REMOVE MBGR	MBGR (STEEL POST)	DOUBLE MBGR (STEEL POST)	VEGETATION CONTROL (MINOR CONCRETE)	CRASH CUSHION (TYPE CAT)	CRASH CUSHION (TYPE CAT) BACKUP	BURIED POST END ANCHOR (N)	ALTERNATIVE FLARED TERMINAL SYSTEM	ALTERNATIVE IN-LINE TERMINAL SYSTEM	TRANSITION RAILING (TYPE WB)	END CAP (TYPE TC) (N)	MINOR CONCRETE (MINOR STRUCTURE)	RAIL TENSIONING ASSEMBLY (N)	END ANCHOR ASSEMBLY (TYPE SFT)	NESTED MBGR (N)	MBGR LAYOUT TYPE (N)	COMMENTS
			LF	LF	LF	SQYD	EA	EA	EA	EA	EA	EA	EA	CY	EA	EA	EA		
R7.35 to R7.36	EB	Rt	81.25	87.5		70.05			1							1		16C	
R8.26 to R8.30	EB	Rt	206.25	175		115.45			1			1	1	8.0			1	12C	
R8.88 to R8.89	EB	Rt	100	62.5		76.06				1						1		11B	
R9.28 to R9.29	EB	Rt	62.5	37.5		44.11			1			1	1	2.0				12C	
R9.57 to R9.59	EB	Rt		75		76.54					1					1		11A	
R10.64 to R10.66	EB	Rt	112.5	75		82.55				1						1		16B	
R11.07 to R11.08	EB	Rt		50		63.56					1					1		16A	
13.23 to 13.42	EB	Rt		1012.5		562.99										2	4		SEE DETAIL SHEET C-25
R7.35 to R7.39	MEDIAN		200																MEDIAN McGOWAN PARKWAY OC
R7.35 to R7.39	EB	Lt		37.5	25	120.20	1	1							1	1		14A	MEDIAN McGOWAN PARKWAY OC
R7.35 to R7.39	WB	Lt		37.5	25	120.20	1	1							1	1		14A	MEDIAN McGOWAN PARKWAY OC
R8.42 to R8.43	NB (Rte 65)	Lt	75																
R8.42 to R8.44	WB (Rte 70)	Rt	137.5																
R8.51 to R8.52	NB (Rte 65)	Lt		62.5		76.06				1						1		16B	
R8.51 to R8.52	WB (Rte 70)	Rt		62.5		76.06				1						1		16B	
R8.69 to R9.06	WB	Rt		1900		1023.51					1					1		16A	
R8.88 to R8.89	WB	Rt	100																
R8.93 to R8.94	WB	Rt	75																
R9.15 to R9.17	SB (Rte 65)	Rt	66	25		58.38					1	1	1	2.0				12A	
R9.15 to R9.17	SB (Rte 65)	Lt	66	37.5		120.88				1		1	1	2.0				12B	
R9.28 to R9.29	WB	Rt	50	125		84.32			1			1	1	2.0				12C	
R9.55 to R9.86	WB	Rt		1600		867.84					1					1	2	16A	
R10.67 to R10.70	WB	Rt	125	87.5		89.04				1						1		16B	
R11.08 to R11.09	WB	Rt		50		76.06					1					1		11A	
13.02 to 13.03	WB	Rt	75																
13.02 to 13.09	WB	Rt		412.5		251.66					1	1	1					12A	
13.25 to 13.27	WB	Rt	87.5	200		166.87				1		1	1	2.0				12B	WB (N BEALE OFF-RAMP)
13.26 to 13.33	WB	Rt	75																
13.26 to 13.34	WB	Rt		412.5		277.61					1	1	1	1.0				11A	
13.44 to 13.54	WB	Rt		475		310.04					1					1	1	11A	
		TOTAL	1694.5	7100	50	4810.03	2	2	4	7	9	8	8	19.0	2	16	8		

(N) - NOT A SEPARATE PAY ITEM, FOR INFORMATION ONLY.

SUMMARY OF QUANTITIES

Q-2

STATE OF CALIFORNIA - DEPARTMENT OF TRANSPORTATION
PROJECT DEVELOPMENT

FUNCTIONAL SUPERVISOR: KEVIN ESPINOZA
CALCULATED-DESIGNED BY: CARMEN RODRIGUEZ
CHECKED BY: MIKE PANCHESSAN
REVISED BY: M.A.P. DATE REVISED: 5-01-10
C.R. 5-07-10

LAST REVISION 05/04/10 DATE PLOTTED => 25-AUG-2010 TIME PLOTTED => 10:06

Dist	COUNTY	ROUTE	POST MILES TOTAL PROJECT	SHEET No.	TOTAL SHEETS
03	Yub	70	R7.0/13.6	75	113

REGISTERED CIVIL ENGINEER 7-26-10 DATE

7-26-10
PLANS APPROVAL DATE

REGISTERED PROFESSIONAL ENGINEER ERIC NORMAN SOUZA No. 75706 Exp. 06-30-12 CIVIL STATE OF CALIFORNIA

THE STATE OF CALIFORNIA OR ITS OFFICERS OR AGENTS SHALL NOT BE RESPONSIBLE FOR THE ACCURACY OR COMPLETENESS OF SCANNED COPIES OF THIS PLAN SHEET.

DRAINAGE INLET

LOCATION	(N) DI TYPE	ADJUST INLET (EA)	ADJUST FRAME AND GRATE TO GRADE (EA)
PM R8.38 EB L+	G2	1	1
PM R8.45 EB L+	G2	1	1
PM R9.00 EB L+ (MEDIAN)	G1	1	1
TOTAL		3	3

(N) - NOT A SEPARATE PAY ITEM, FOR INFORMATION ONLY.

OVERSIDE DRAIN

LOCATION	REMOVE AC OVERSIDE DRAIN (EA)	PLACE HMA (Misc AREAS) (SQYD)	MINOR HMA (TON)*
WB R+ PM 7.19	1	6.22	1.14
EB R+ PM 7.22	1	7.70	1.41
WB R+ PM 7.50	1	2.89	0.53
EB R+ PM 7.55	1	11.40	2.09
WB OFF RAMP TO McGOWAN Pkwy R+	1	4.74	0.87
EB ON RAMP FROM McGOWAN Pkwy R+	1	11.77	2.16
EB R+ PM 7.94	1	9.18	1.68
WB L+ PM 8.08	1	5.48	1.00
WB L+ PM 8.15	1	5.48	1.00
WB R+ PM 8.20	1	3.26	0.60
WB L+ PM 8.47	1	9.18	1.68
WB R+ PM 8.56	1	2.89	0.53
EB R+ PM 8.84	1	4.37	0.80
EB R+ PM 8.89	1	5.48	1.00
WB R+ PM 9.57	1	7.33	1.34
WB R+ PM 9.73	1	5.48	1.00
WB R+ PM 11.02	1	6.59	1.21
EB R+ PM 11.28	1	4.00	0.73
TOTAL	18	113.44	20.77

* SEE Q-5 SHEET FOR TOTAL MINOR HMA QUANTITY.

DOWNDRAIN AND ENTRANCE TAPER

LOCATION	REMOVE DOWNDRAIN (LF)	12" CSP DOWNDRAIN (LF)	18" ENTRANCE TAPER (EA)	ANCHOR ASSEMBLY (EA)
WB L+ PM 8.10	20	20	1	2
EB R+ PM 9.03	20	20	1	2
EB OFF RAMP TO FEATHER RIVER Blvd R+	27	27	1	3
EB R+ PM 13.22	20	20	1	2
EB R+ PM 13.28	40	40	1	4
WB R+ PM 13.29	50	50	1	5
EB R+ PM 13.40	30	30	1	3
EB R+ PM 13.42	30	30	1	3
WB R+ PM 13.43	40	40	1	4
TOTAL	277	277	9	28

SUMMARY OF QUANTITIES

Q-3

REVISED BY | DATE REVISED
JOSE L. VALDEZ | J. A. HUERTA
CALCULATED-DESIGNED BY | CHECKED BY
FUNCTIONAL SUPERVISOR
KEVIN ESPINOZA
STATE OF CALIFORNIA - DEPARTMENT OF TRANSPORTATION
Caltrans PROJECT DEVELOPMENT

LAST REVISION 05/04/10
DATE PLOTTED => 25-AUG-2010
TIME PLOTTED => 10:06

Dist	COUNTY	ROUTE	POST MILES TOTAL PROJECT	SHEET No.	TOTAL SHEETS
03	Yub	70	R7.0/13.6	76	113

REGISTERED CIVIL ENGINEER 7-26-10 DATE

7-26-10
PLANS APPROVAL DATE

REGISTERED PROFESSIONAL ENGINEER ERIC NORMAN SOUZA No. 75706 Exp. 06-30-12 CIVIL STATE OF CALIFORNIA

THE STATE OF CALIFORNIA OR ITS OFFICERS OR AGENTS SHALL NOT BE RESPONSIBLE FOR THE ACCURACY OR COMPLETENESS OF SCANNED COPIES OF THIS PLAN SHEET.

REMOVE BASE AND SURFACING

LOCATION	CY
EB ROUTE 70 PM R10.88 TO R11.06 R†	975.6
1	64.1
2	9.5
3	42.1
4	35.6
5	21.9
6	33.9
7	17.2
12	16.1
13	49.8
14	104.6
15	72.8
TOTAL	1,443.1

1. FOR PM LOCATIONS SEE LANDSCAPE DETAILS.

REMOVE CONCRETE

LOCATION	CY
1	2.0
2	0.8
3	2.8
4	5.1
5	2.2
6	4.5
7	2.7
12	2.9
13	5.1
14	5.9
15	3.7
17	2.7
18	2.8
19	2.1
20	2.7
TOTAL	48.0

1. FOR PM LOCATIONS SEE LANDSCAPE DETAILS.

CONCRETE BARRIER

LOCATION	REMOVE CONCRETE BARRIER	CONCRETE BARRIER (TYPE 60E)	CONCRETE BARRIER (TYPE 60)
	LF	LF	LF
PM R8.917 TO R8.942 MEDIAN	158.67		
PM R8.917 TO R8.921 MEDIAN			15
PM R8.921 TO R8.939 MEDIAN		94.67	
PM R8.939 TO R8.942 MEDIAN			49
TOTAL	158.67	94.67	64

MINOR CONCRETE (PATTERNED)

LOCATION	SQYD	LOCATION	SQYD
1	232	11	372
2	76	12	367
3	258	13	191
4	466	14	577
5	122	15	415
6	322	16	412
7	184	17	293
8	328	18	305
9	144	19	234
10	88	20	304
SUBTOTAL	2,220	SUBTOTAL	3,470
TOTAL	5,690		

1. FOR PM LOCATIONS SEE LANDSCAPE DETAILS.

REPLACE AC SURFACING

LOCATION	EASTBOUND		WESTBOUND	
	WIDTH (LF)			
	12	24	12	24
	VOLUME (CY)			
ROUTE 70 PM R7.00 TO R7.90	333.3	138.9	333.3	138.9
ROUTE 70 PM R7.90 TO R9.00	277.8	305.6	486.1	208.3
ROUTE 70 PM R9.50 TO R9.80	166.7	138.9	83.3	222.2
ROUTE 70 PM R9.80 TO R11.20	625.0	881.9	444.4	944.4
ROUTE 70 PM R11.20 TO 13.60	—	3,520.0	—	3,520.0
SB ROUTE 65			69.4	138.9
	Var 12-24		Var 12-24	
EB OFF RAMP TO McGOWAN PARKWAY	138.9		—	
EB ON RAMP FROM McGOWAN PARKWAY	375.0		—	
EB OFF RAMP TO OLIVEHURST Ave	202.1		—	
EB ON RAMP FROM OLIVEHURST Ave	99.2		—	
EB OFF RAMP TO LINDHURST Ave	115.7		—	
EB ON RAMP FROM LINDHURST Ave	97.2		—	
EB OFF RAMP TO FEATHER RIVER Blvd	186.3		—	
EB ON RAMP FROM FEATHER RIVER Blvd	144.0		—	
EB OFF RAMP TO NORTH BEALE Rd	64.4		—	
EB ON RAMP FROM NORTH BEALE Rd	84.7		—	
WB ON RAMP FROM McGOWAN PARKWAY	—		138.9	
WB OFF RAMP TO McGOWAN PARKWAY	—		145.8	
WB ON RAMP FROM OLIVEHURST Ave	—		178.9	
WB OFF RAMP TO OLIVEHURST Ave	—		268.2	
WB ON RAMP FROM ERLE Rd	—		152.8	
WB OFF RAMP TO ERLE Rd	—		173.6	
WB ON RAMP FROM FEATHER RIVER Blvd	—		156.0	
WB OFF RAMP TO FEATHER RIVER Blvd	—		155.1	
WB OFF RAMP TO NORTH BEALE Rd	—		322.4	
SUBTOTAL	7,895.6		8280.9	
TOTAL	16176.5			

SHOULDER RUMBLE STRIP (HMA, GROUND-IN INDENTATIONS)

LOCATION	L†/R†	LENGTH (STA)
WB R9.40 TO R9.51	R†	3.59
WB R9.40 TO R11.39	L†	108.52
WB R9.59 TO R9.75	R†	8.30
WB R10.02 TO R10.31	R†	15.31
WB R10.50 TO R11.20	R†	36.73
WB R11.31 TO R11.39	R†	3.97
WB 13.03 TO 13.13	R†	5.70
WB 13.03 TO 13.23	L†	10.82
WB 13.25 TO 13.50	L†	13.43
WB 13.39 TO 13.37	R†	3.65
EB R9.40 TO R9.76	R†	19.10
EB R9.40 TO R11.30	L†	103.15
EB R9.80 TO R10.03	R†	12.38
EB R10.20 TO R11.10	R†	47.57
EB R11.29 TO R11.35	R†	3.37
EB 13.00 TO 13.21	L†	9.90
EB 13.22 TO 13.33	R†	6.27
EB 13.22 TO 13.52	L†	15.50
TOTAL		427.26

SUMMARY OF QUANTITIES

Q-4

STATE OF CALIFORNIA - DEPARTMENT OF TRANSPORTATION
Caltrans PROJECT DEVELOPMENT

FUNCTIONAL SUPERVISOR KEVIN ESPINOZA
CALCULATED-DESIGNED BY SHARON L. WOODBECK
CHECKED BY JOSE L. VALDEZ
REVISED BY
DATE REVISED

LAST REVISION 05/04/10 DATE PLOTTED => 25-AUG-2010 TIME PLOTTED => 10:06

Dist	COUNTY	ROUTE	POST MILES TOTAL PROJECT	SHEET No.	TOTAL SHEETS
03	Yub	70	R7.0/13.6	77	113

REGISTERED CIVIL ENGINEER 7-26-10 DATE

7-26-10
PLANS APPROVAL DATE

REGISTERED PROFESSIONAL ENGINEER ERIC NORMAN SOUZA No. 75706 Exp. 06-30-12 CIVIL STATE OF CALIFORNIA

THE STATE OF CALIFORNIA OR ITS OFFICERS OR AGENTS SHALL NOT BE RESPONSIBLE FOR THE ACCURACY OR COMPLETENESS OF SCANNED COPIES OF THIS PLAN SHEET.

DIKE

LOCATION	REMOVE AC DIKE	PLACE HMA DIKE					
		TYPE A	TYPE C	TYPE D	TYPE E	TYPE F	MINOR HMA
	LF	LF	LF	LF	LF	LF	TON
WB ROUTE 70 PM R7.10 TO R7.19 R+	459			459			26.90
WB ROUTE 70 PM R7.19 TO R7.59 R+	2,111	2,111					57.00
WB McGOWAN Pkwy ON RAMP PM R7.34 TO R7.35 R+	100	100					2.70
WB ROUTE 70 PM R7.62 TO R7.74 R+	625				625		16.25
WB ROUTE 70 PM R8.08 TO R8.15 L+	393				393		10.22
WB ROUTE 70 PM R8.15 TO R8.21 R+	291				291		7.57
WB ROUTE 70 PM R8.37 TO R8.51 R+	765			765			44.83
WB ROUTE 70 PM R8.51 TO R8.52 R+ (Rte 70)	62.5					62.5	0.83
WB ROUTE 70 PM R8.52 TO R8.53 R+ (Rte 70)	62.5		62.5				0.48
WB ROUTE 70 PM R8.53 TO R8.57 R+	234				234		6.08
WB ROUTE 70 PM R8.49 TO R8.51 L+	100			100			5.86
WB ROUTE 70 PM R8.51 TO R8.52 L+ (Rte 65)	62.5					62.5	0.83
WB ROUTE 70 PM R8.52 TO R8.53 L+ (Rte 65)	62.5		62.5				0.48
WB ROUTE 70 PM R8.53 TO R8.54 L+	66			66			3.87
WB ROUTE 70 PM R8.69 TO R9.05 R+						1,900	25.08
WB ROUTE 70 PM R8.94 TO R8.99 R+	253						0.00
WB ROUTE 70 PM R9.05 TO R9.06 R+			75				0.57
WB ROUTE 70 PM R9.16 TO R9.20 R+	227	227					6.13
WB ROUTE 70 PM R9.55 TO R9.87 R+						1,600	21.12
WB ROUTE 70 PM R9.87 TO R9.88 R+			75				0.57
WB ROUTE 70 PM R9.57 TO R9.73 R+	850						0.00
WB ROUTE 70 PM R10.21 TO R10.22 (Erle Rd Offramp)	78	78					2.11
WB ROUTE 70 PM R10.92 TO R11.02 R+	480			480			28.13
WB ROUTE 70 PM R11.38 TO R11.39 R+	115			115			6.74
WB ROUTE 70 PM 13.02 TO 13.08 R+	311					311	4.11
WB ROUTE 70 PM 13.08 TO 13.10 R+	75		75				0.57
WB ROUTE 70 PM 13.09 TO 13.14 R+	179			179			10.49
WB ROUTE 70 PM 13.26 TO 13.33 R+	338					338	4.46
WB ROUTE 70 PM 13.33 TO 13.36 R+	75		75				0.57
WB ROUTE 70 PM 13.44 TO 13.53 R+	475					475	6.27
WB ROUTE 70 PM 13.53 TO 13.55 R+	56		75				0.57
EB ROUTE 70 PM R7.13 TO R7.22 R+	458			458			26.84
EB ROUTE 70 PM R7.22 TO R7.35 R+	770	770					20.79
EB ROUTE 70 PM R7.35 TO R7.36 R+	37.5		37.5				0.29
EB ROUTE 70 PM R7.36 TO R7.37 R+	50					50	0.66
EB ROUTE 70 PM R7.37 TO R7.55 R+	880	880					23.76
EB ROUTE 70 PM R7.55 TO R7.63 R+	425			425			24.91
EB ROUTE 70 PM R7.64 TO R7.94 R+	1,587			1,587			93.00
EB ROUTE 70 PM R8.07 TO R8.08 R+	264			264			15.47
EB ROUTE 70 PM R8.08 TO R8.26 R+	710	710					19.17
EB ROUTE 70 PM R8.26 TO R8.27 R+	50		50				0.38
EB ROUTE 70 PM R8.27 TO R8.29 R+	100					100	1.32
EB ROUTE 70 PM R8.29 TO R8.30 R+	56			56			3.28
EB ROUTE 70 PM R8.10 TO R8.57 L+	2,629	2,629					70.98
EB ROUTE 70 PM R8.31 TO R8.43 R+	620	620					16.74
EB ROUTE 70 PM R8.43 TO R8.49 R+	425			425			24.91
EB ROUTE 65 PM R8.49 TO R8.55 R+	325			325			19.05
EB ROUTE 65 PM R8.84 TO R8.88 R+	200			200			11.72
EB ROUTE 70 PM R8.88 TO R8.89 R+	62.5		62.5				0.48
EB ROUTE 70 PM R8.89 TO R8.90 R+	62.5					62.5	0.83
EB ROUTE 70 PM R8.90 TO R9.03 R+	696			696			40.79
EB ROUTE 70 PM R9.35 TO R9.42 R+	324	324					8.75
EB ROUTE 70 PM 11.28 TO 11.35 R+	381			381			22.33
EB ROUTE 70 PM 13.23 TO 13.42 R+	1,013					1,013	13.37
TOTAL FOR THIS SHEET	21,032	8,449	650	6,981	1,543	5,975	761.21
TOTAL FROM OVERSIDE DRAIN-SHEET Q-3							20.77
TOTAL							781.98

SUMMARY OF QUANTITIES

Q-5

C.R.	C.R.	C.R.	REVISED BY	CARMEN RODRIGUEZ	CALCULATED-DESIGNED BY	FUNCTIONAL SUPERVISOR	STATE OF CALIFORNIA - DEPARTMENT OF TRANSPORTATION
5-19-10	5-17-10	5-10-10	DATE REVISED	NASIM HASAN	CHECKED BY	KEVIN ESPINOZA	Caltrans PROJECT DEVELOPMENT

LAST REVISION DATE PLOTTED => 25-AUG-2010
05/04/10 TIME PLOTTED => 10:06

Dist	COUNTY	ROUTE	POST MILES TOTAL PROJECT	SHEET No.	TOTAL SHEETS
03	Yub	70	R7.0/13.6	78	113

REGISTERED CIVIL ENGINEER 7-26-10 DATE

7-26-10
PLANS APPROVAL DATE

REGISTERED PROFESSIONAL ENGINEER ERIC NORMAN SOUZA No. 75706 Exp. 06-30-12 CIVIL STATE OF CALIFORNIA

THE STATE OF CALIFORNIA OR ITS OFFICERS OR AGENTS SHALL NOT BE RESPONSIBLE FOR THE ACCURACY OR COMPLETENESS OF SCANNED COPIES OF THIS PLAN SHEET.

NOTES:

1. FOR EXACT LOCATION OF SIGN POSTS, SEE SIGN DETAIL SHEET.
2. PATTERN SHALL BE BELGIAN BLOCK TEXTURED AND FISHSCALE GRANITE RADIUS PATTERN VARIED STONES 3.5", 4.5", 5.5", 7.5".
3. ALL EXCAVATED MATERIAL MUST REMAIN ON SITE.

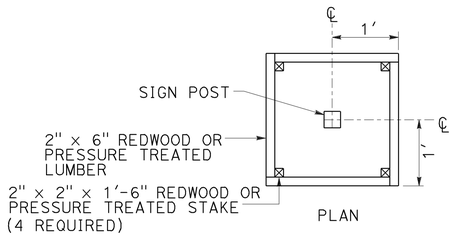

DETAIL A
OPENING FOR SIGN POST MINOR CONCRETE (PATTERNED)

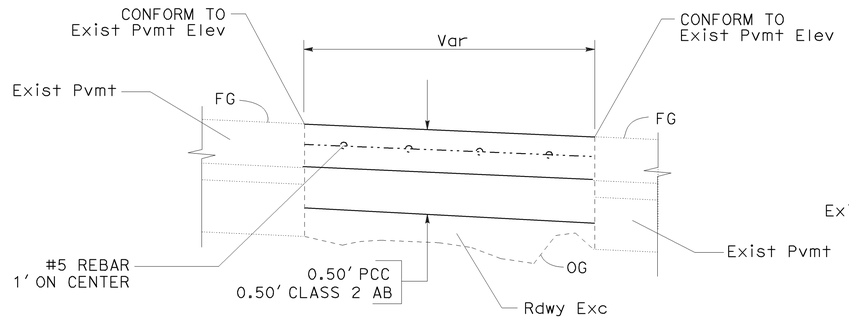

TYPICAL SECTION
MINOR CONCRETE (PATTERNED) IN EXISTING OG

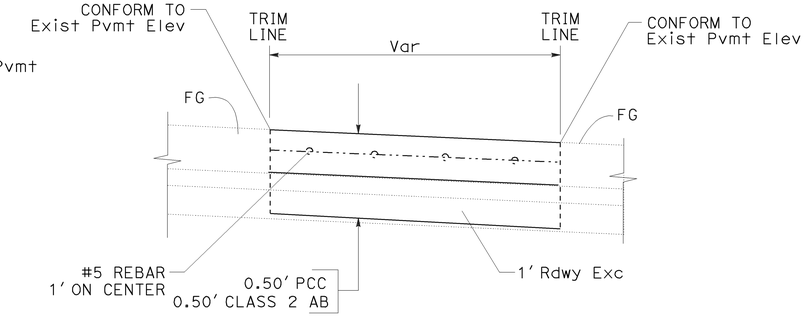

TYPICAL SECTION
MINOR CONCRETE (PATTERNED) IN EXISTING AC

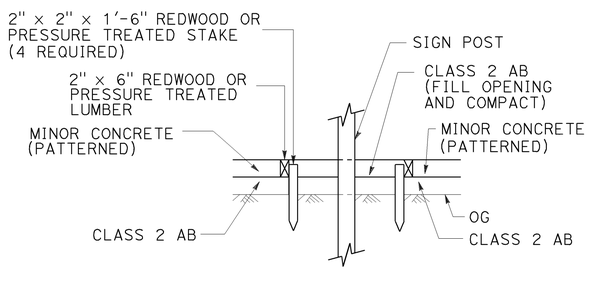

SECTION A-A

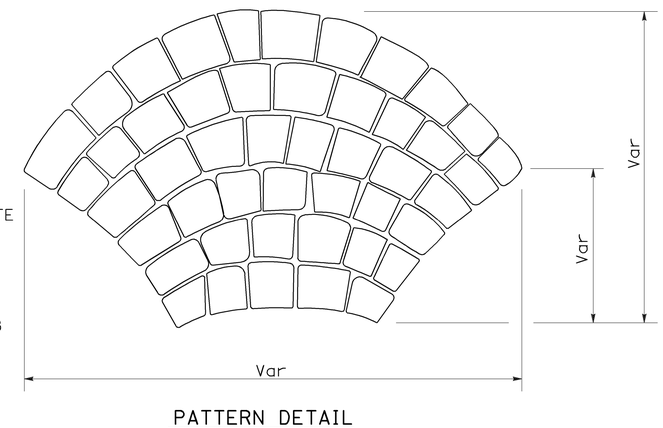

PATTERN DETAIL
SEE NOTE 2

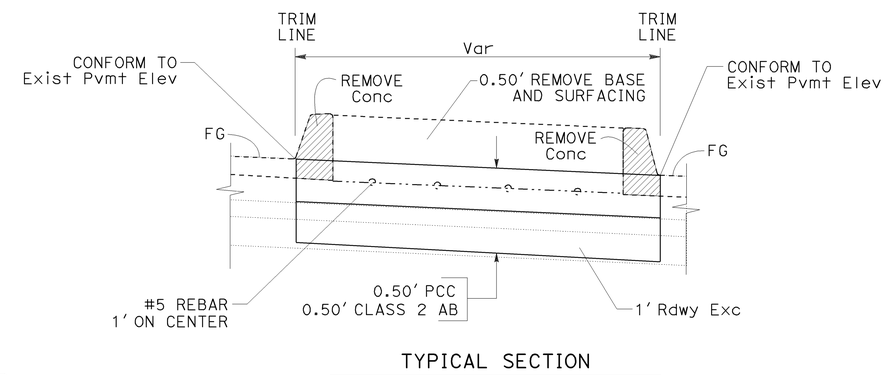

TYPICAL SECTION
MINOR CONCRETE (PATTERNED) WITH EXISTING CONCRETE CURB

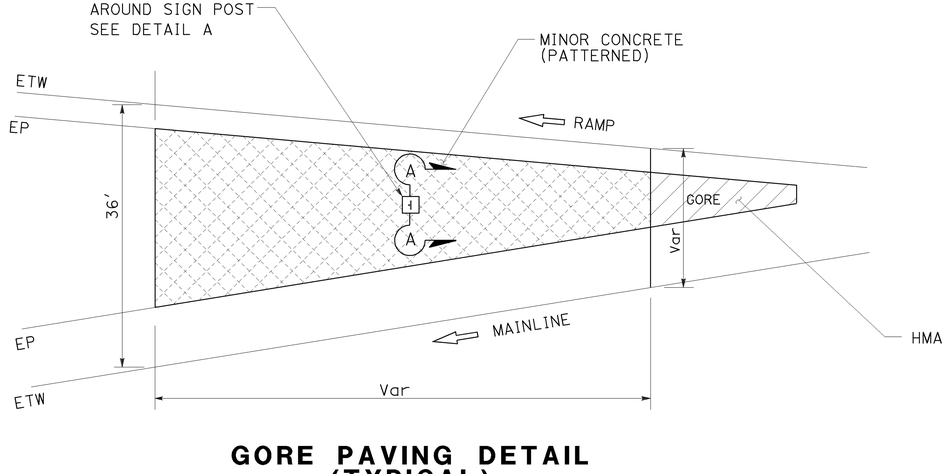

GORE PAVING DETAIL (TYPICAL)

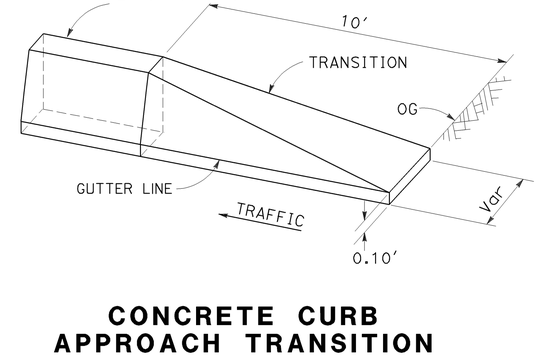

CONCRETE CURB APPROACH TRANSITION

LANDSCAPE DETAILS

NO SCALE **LD-1**

STATE OF CALIFORNIA - DEPARTMENT OF TRANSPORTATION
Caltrans PROJECT DEVELOPMENT

FUNCTIONAL SUPERVISOR: KEVIN ESPINOZA
CALCULATED-DESIGNED BY: DAL BAINS
CHECKED BY: ERIC SOUZA
REVISED BY
DATE REVISED

LAST REVISION 05/01/10
DATE PLOTTED => 25-AUG-2010
TIME PLOTTED => 10:06

Dist	COUNTY	ROUTE	POST MILES TOTAL PROJECT	SHEET No.	TOTAL SHEETS
03	Yub	70	R7.0/13.6	79	113

REGISTERED CIVIL ENGINEER 7-26-10 DATE

7-26-10
PLANS APPROVAL DATE

REGISTERED PROFESSIONAL ENGINEER
ERIC NORMAN SOUZA
No. 75706
Exp. 06-30-12
CIVIL
STATE OF CALIFORNIA

THE STATE OF CALIFORNIA OR ITS OFFICERS OR AGENTS SHALL NOT BE RESPONSIBLE FOR THE ACCURACY OR COMPLETENESS OF SCANNED COPIES OF THIS PLAN SHEET.

NOTES: 1. FOR TYPICAL SECTIONS AND DIMENSIONS OF MINOR CONCRETE (PATTERENED), SEE SHEET LD-1.

LEGEND

- REMOVE BASE AND SURFACING
- MINOR CONCRETE (PATTERNED)
- DIRECTION OF TRAFFIC

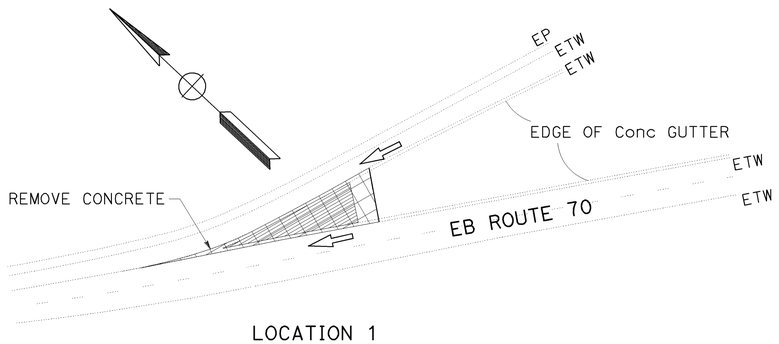

LOCATION 1
EB FROM NORTH BEALE ON RAMP

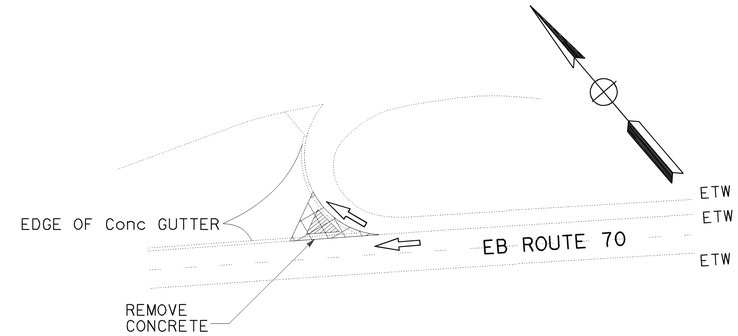

LOCATION 2
EB TO NORTH BEALE OFF RAMP

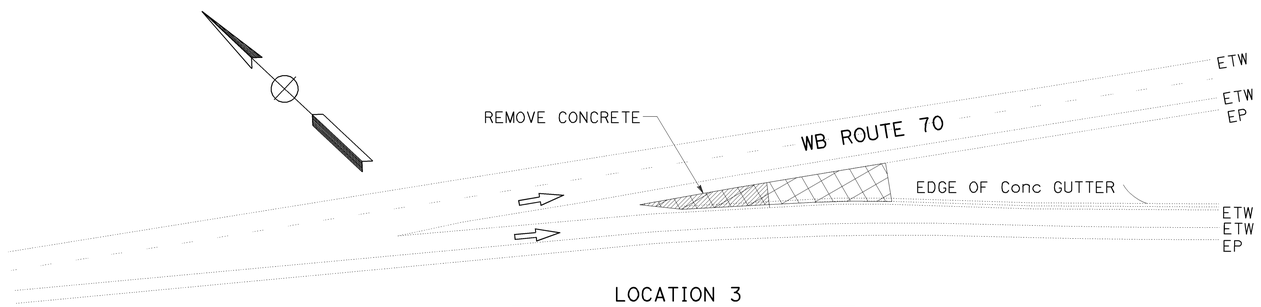

LOCATION 3
WB TO NORTH BEALE OFF RAMP

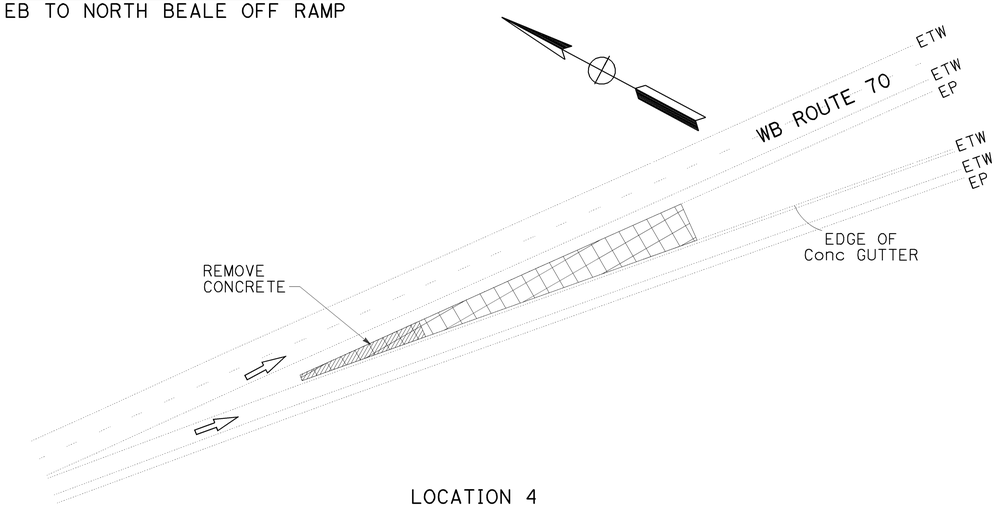

LOCATION 4
WB FEATHER RIVER Blvd OFF RAMP

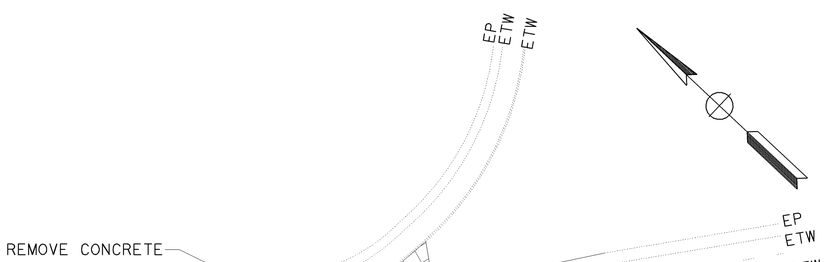

LOCATION 5
EB FEATHER RIVER Blvd ON RAMP

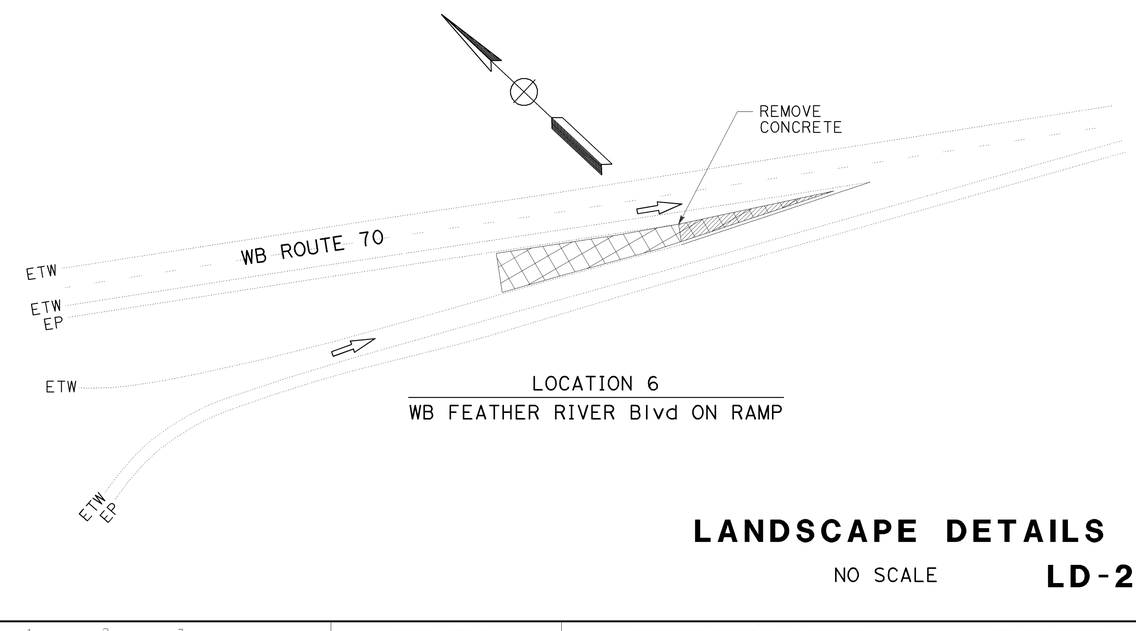

LOCATION 6
WB FEATHER RIVER Blvd ON RAMP

LANDSCAPE DETAILS

NO SCALE

LD-2

STATE OF CALIFORNIA - DEPARTMENT OF TRANSPORTATION
PROJECT DEVELOPMENT

FUNCTIONAL SUPERVISOR: KEVIN ESPINOZA
CALCULATED-DESIGNED BY: DAL BAINS
CHECKED BY: ERIC SOUZA
REVISED BY
DATE REVISED

LAST REVISION 04/16/10
DATE PLOTTED => 25-AUG-2010
TIME PLOTTED => 10:06

Dist	COUNTY	ROUTE	POST MILES TOTAL PROJECT	SHEET No.	TOTAL SHEETS
03	Yub	70	R7.0/13.6	80	113

REGISTERED CIVIL ENGINEER 7-26-10 DATE

7-26-10
PLANS APPROVAL DATE

REGISTERED PROFESSIONAL ENGINEER
ERIC NORMAN SOUZA
No. 75706
Exp. 06-30-12
CIVIL
STATE OF CALIFORNIA

THE STATE OF CALIFORNIA OR ITS OFFICERS OR AGENTS SHALL NOT BE RESPONSIBLE FOR THE ACCURACY OR COMPLETENESS OF SCANNED COPIES OF THIS PLAN SHEET.

NOTES: 1. FOR TYPICAL SECTIONS AND DIMENSIONS OF MINOR CONCRETE (PATTERENED), SEE SHEET LD-1.

LEGEND

- REMOVE BASE AND SURFACING
- MINOR CONCRETE (PATTERNED)
- DIRECTION OF TRAFFIC

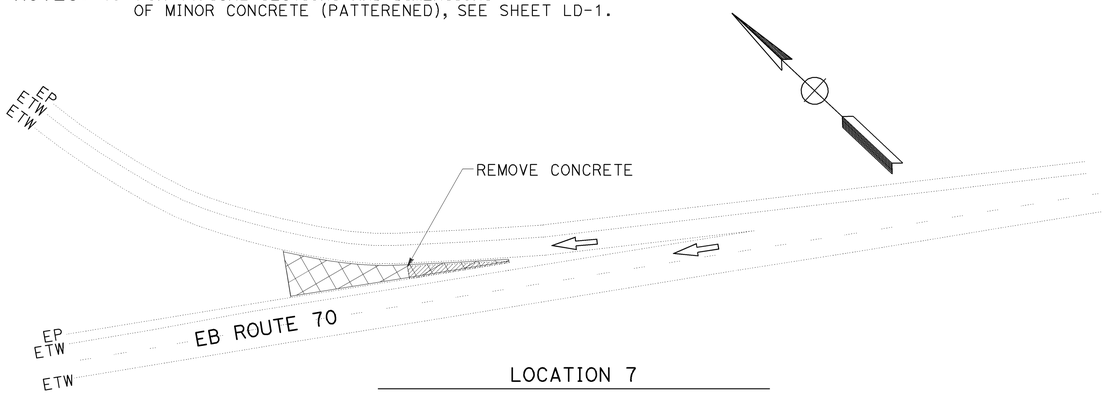

LOCATION 7

EB FEATER RIVER Blvd OFF RAMP

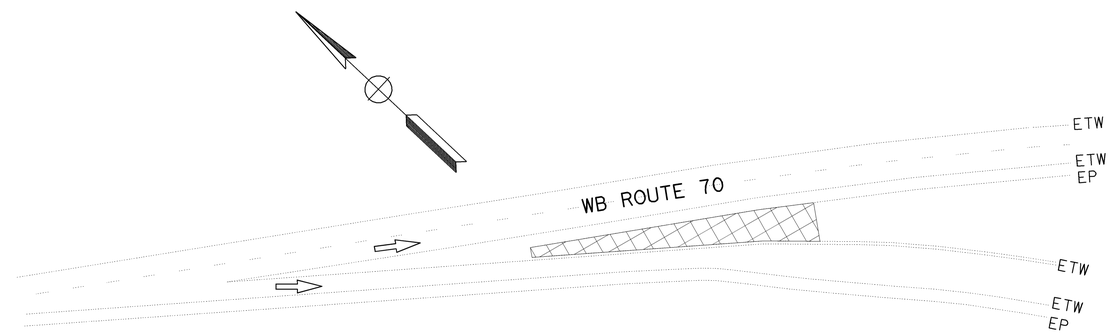

LOCATION 8

WB ERLE Rd OFF RAMP

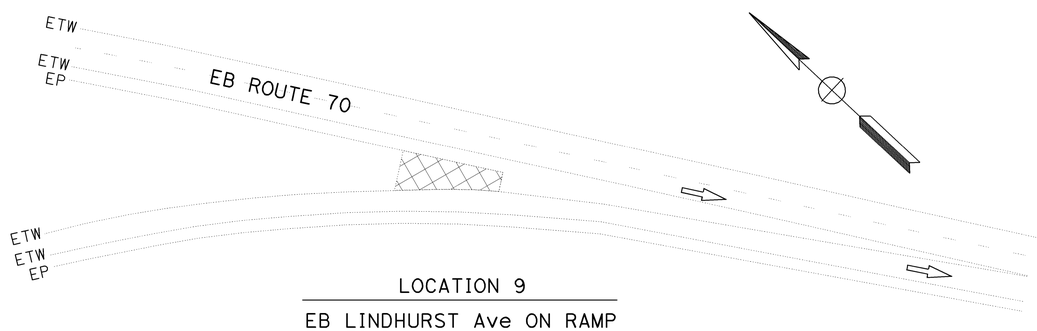

LOCATION 9

EB LINDHURST Ave ON RAMP

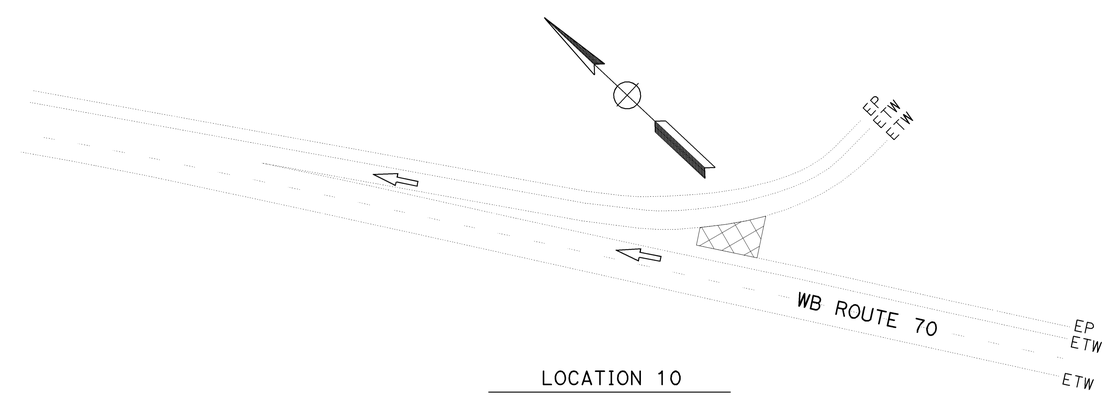

LOCATION 10

WB ERLE Rd ON RAMP

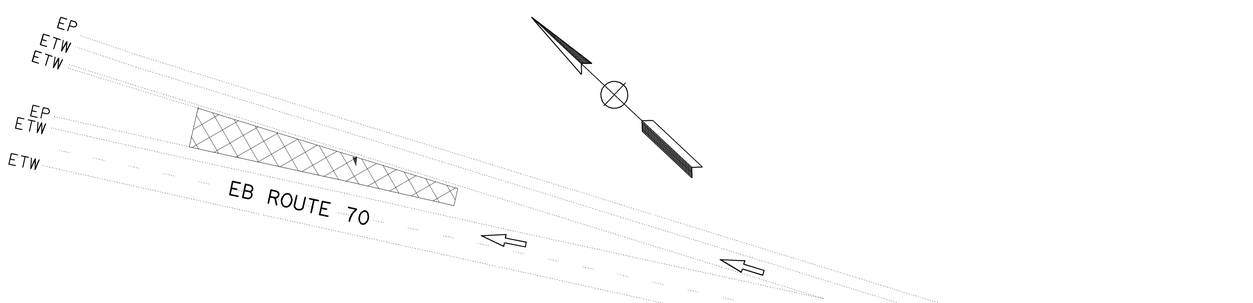

LOCATION 11

EB LINDHURST Ave OFF RAMP

LANDSCAPE DETAILS

NO SCALE

LD-3

STATE OF CALIFORNIA - DEPARTMENT OF TRANSPORTATION
Caltrans® PROJECT DEVELOPMENT

FUNCTIONAL SUPERVISOR: KEVIN ESPINOZA

CALCULATED-DESIGNED BY: DAL BAINS
CHECKED BY: ERIC SOUZA

REVISED BY
DATE REVISED

LAST REVISION 05/01/10
DATE PLOTTED => 25-AUG-2010
TIME PLOTTED => 10:06

Dist	COUNTY	ROUTE	POST MILES TOTAL PROJECT	SHEET No.	TOTAL SHEETS
03	Yub	70	R7.0/13.6	81	113

REGISTERED CIVIL ENGINEER 7-26-10 DATE

7-26-10
PLANS APPROVAL DATE

REGISTERED PROFESSIONAL ENGINEER
ERIC NORMAN SOUZA
No. 75706
Exp. 06-30-12
CIVIL
STATE OF CALIFORNIA

THE STATE OF CALIFORNIA OR ITS OFFICERS OR AGENTS SHALL NOT BE RESPONSIBLE FOR THE ACCURACY OR COMPLETENESS OF SCANNED COPIES OF THIS PLAN SHEET.

NOTES: 1. FOR TYPICAL SECTIONS AND DIMENSIONS OF MINOR CONCRETE (PATTERENED), SEE SHEET LD-1.

LEGEND

- REMOVE BASE AND SURFACING
- MINOR CONCRETE (PATTERNED)
- DIRECTION OF TRAFFIC

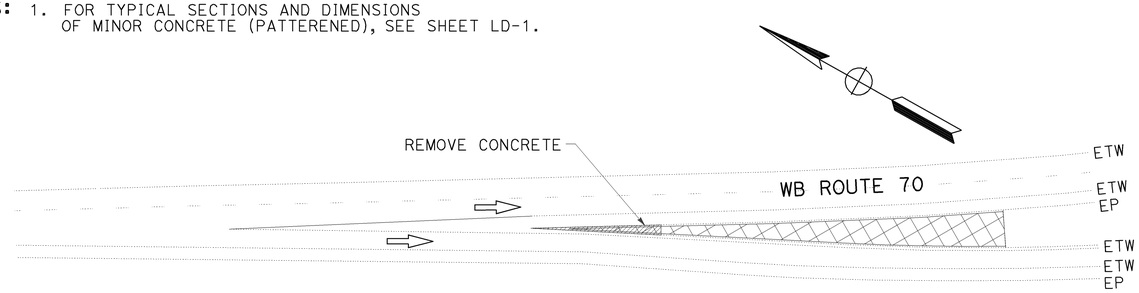

LOCATION 12
WB OLIVEHURST Ave OFF RAMP

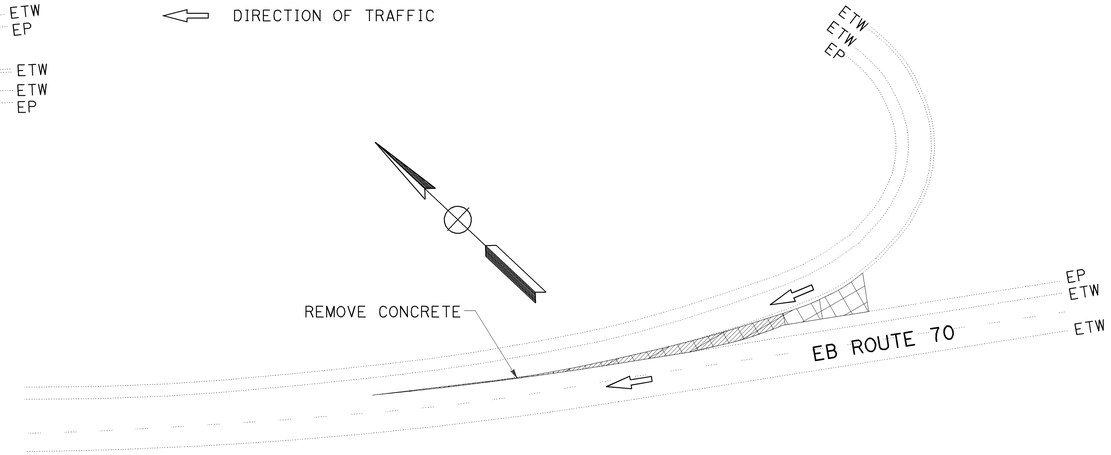

LOCATION 13
EB OLIVEHURST Ave ON RAMP

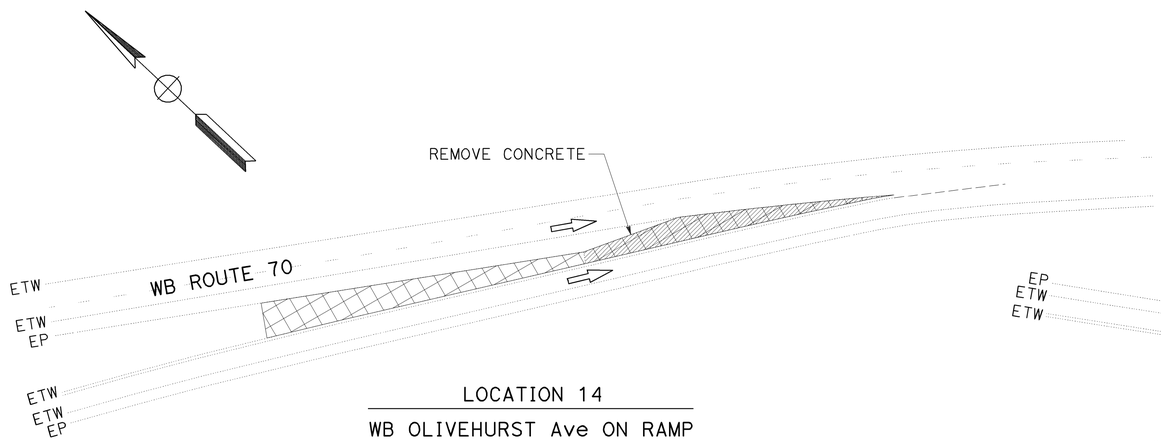

LOCATION 14
WB OLIVEHURST Ave ON RAMP

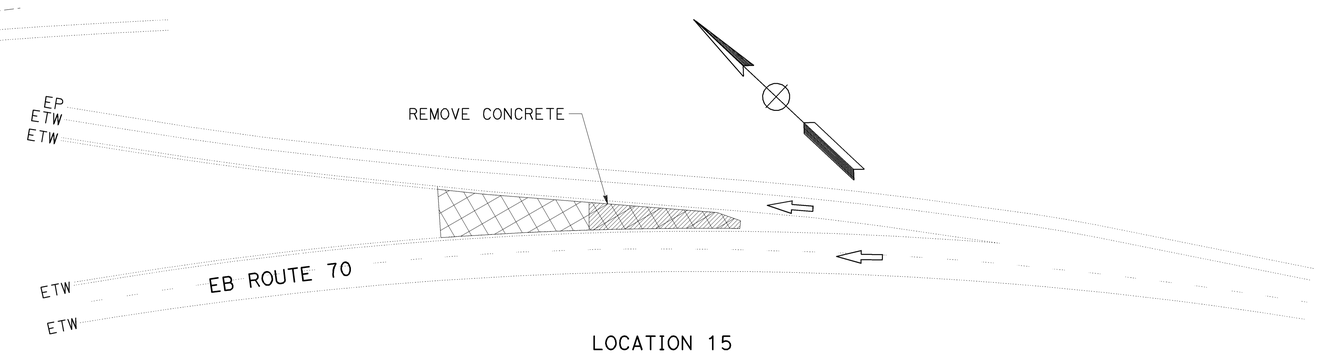

LOCATION 15
EB OLIVEHURST Ave OFF RAMP

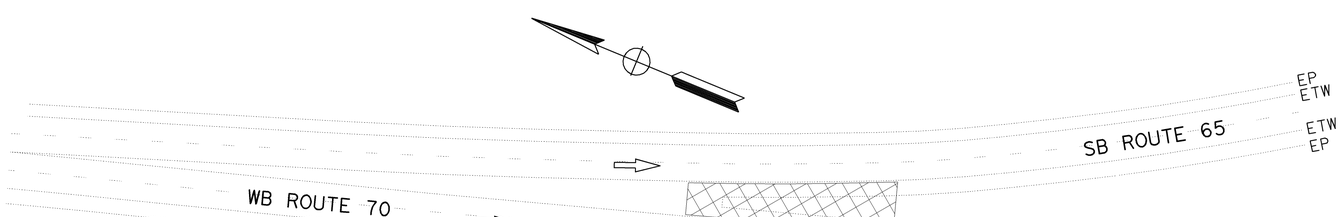

LOCATION 16
WB ROUTE 70/65 SB

LANDSCAPE DETAILS

NO SCALE **LD-4**

STATE OF CALIFORNIA - DEPARTMENT OF TRANSPORTATION
Caltrans PROJECT DEVELOPMENT

FUNCTIONAL SUPERVISOR: KEVIN ESPINOZA
CALCULATED-DESIGNED BY: DAL BAINS
CHECKED BY: ERIC SOUZA
REVISED BY / DATE REVISED

LAST REVISION 05/03/10 | DATE PLOTTED => 25-AUG-2010 | TIME PLOTTED => 10:06

Dist	COUNTY	ROUTE	POST MILES TOTAL PROJECT	SHEET No.	TOTAL SHEETS
03	Yub	70	R7.0/13.6	82	113

REGISTERED CIVIL ENGINEER 7-26-10 DATE

7-26-10
PLANS APPROVAL DATE

REGISTERED PROFESSIONAL ENGINEER
ERIC NORMAN SOUZA
No. 75706
Exp. 06-30-12
CIVIL
STATE OF CALIFORNIA

THE STATE OF CALIFORNIA OR ITS OFFICERS OR AGENTS SHALL NOT BE RESPONSIBLE FOR THE ACCURACY OR COMPLETENESS OF SCANNED COPIES OF THIS PLAN SHEET.

NOTES: 1. FOR TYPICAL SECTIONS AND DIMENSIONS OF MINOR CONCRETE (PATTERENED), SEE SHEET LD-1.

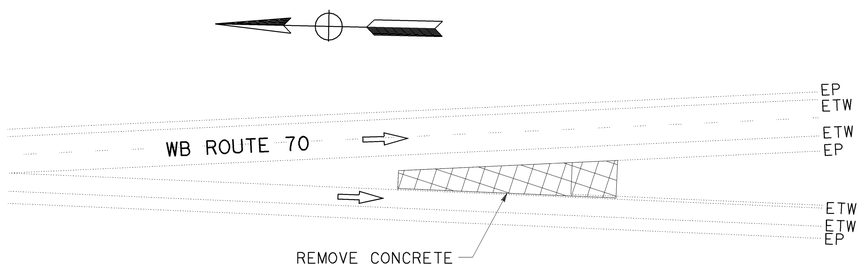

LOCATION 17

WB MCGOWAN PARKWAY OFF RAMP

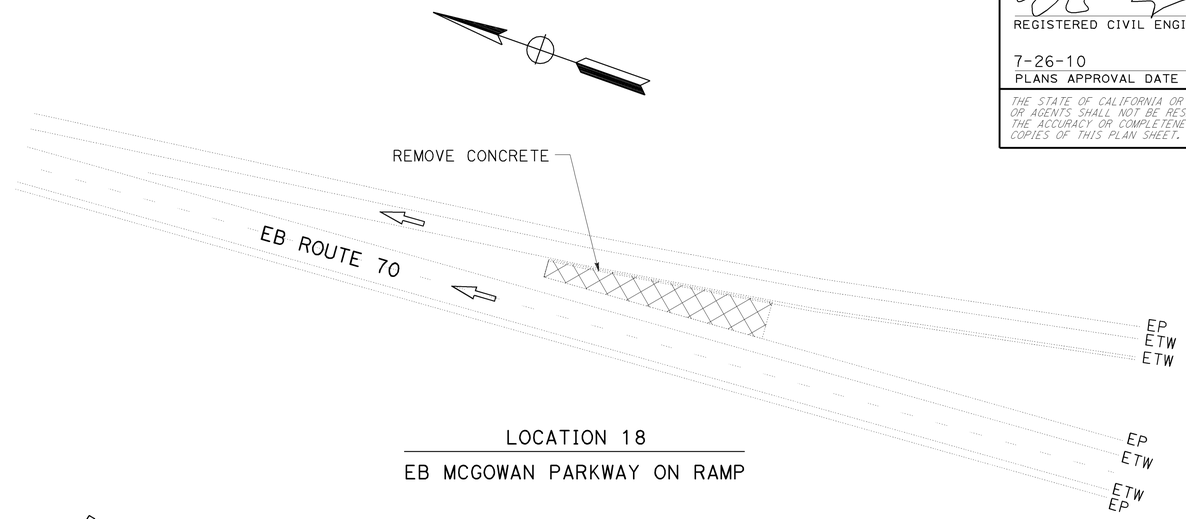

LOCATION 18

EB MCGOWAN PARKWAY ON RAMP

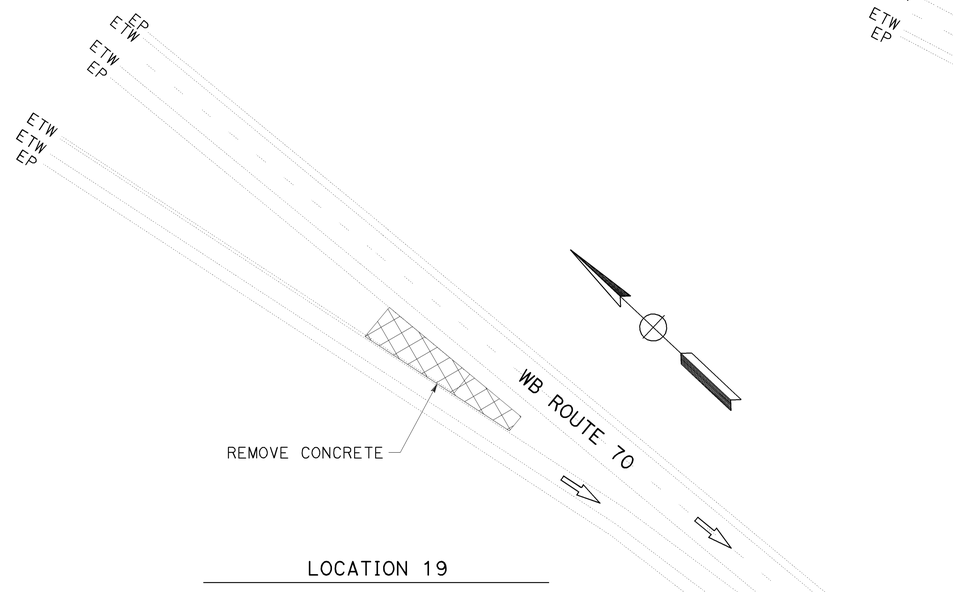

LOCATION 19

WB MCGOWAN PARKWAY ON RAMP

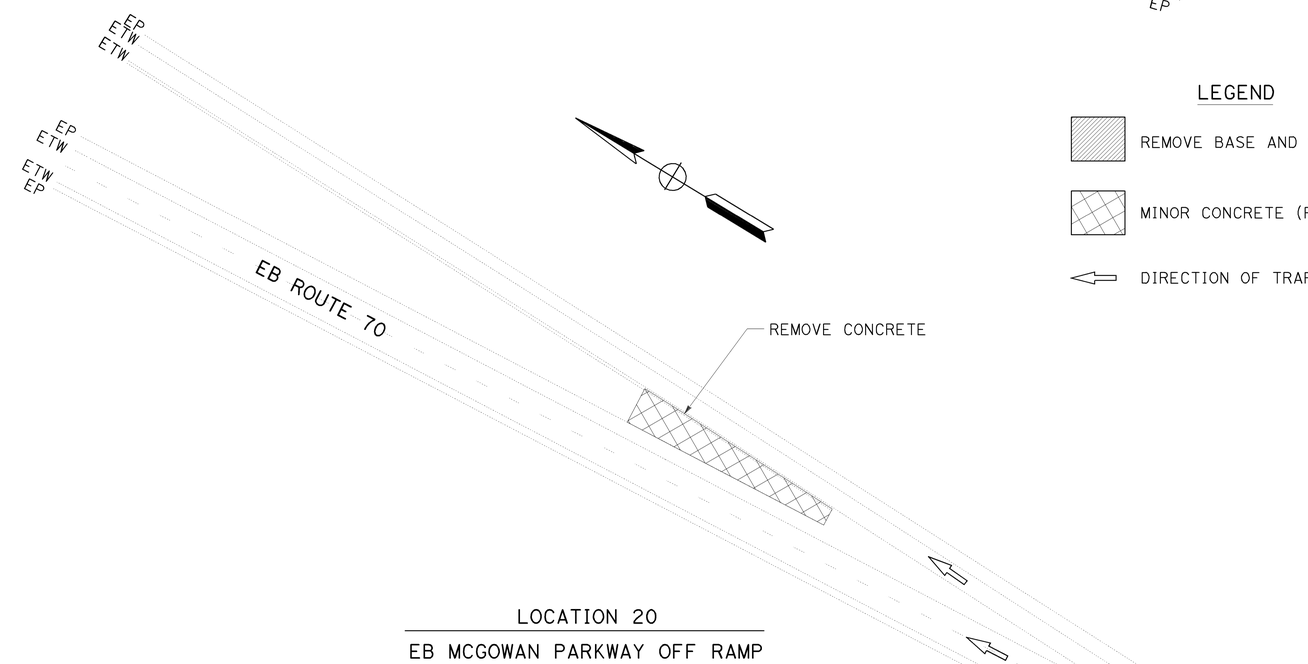

LOCATION 20

EB MCGOWAN PARKWAY OFF RAMP

LEGEND

REMOVE BASE AND SURFACING

MINOR CONCRETE (PATTERNED)

DIRECTION OF TRAFFIC

LANDSCAPE DETAILS

NO SCALE

LD-5

STATE OF CALIFORNIA - DEPARTMENT OF TRANSPORTATION
Caltrans® PROJECT DEVELOPMENT

FUNCTIONAL SUPERVISOR: KEVIN ESPINOZA
CALCULATED-DESIGNED BY: DAL BAINS
CHECKED BY: ERIC SOUZA
REVISED BY
DATE REVISED

LAST REVISION 05/01/10
DATE PLOTTED => 25-AUG-2010
TIME PLOTTED => 10:06

Dist	COUNTY	ROUTE	POST MILES TOTAL PROJECT	SHEET No.	TOTAL SHEETS
03	Yub	70	R7.0/13.6	83	113

R. P. Gill 7-26-10
REGISTERED ELECTRICAL ENGINEER

7-26-10
PLANS APPROVAL DATE

REGISTERED PROFESSIONAL ENGINEER
RUPINDER PAL GILL
No. 16642
Exp 06-30-12
ELECTRICAL
STATE OF CALIFORNIA

THE STATE OF CALIFORNIA OR ITS OFFICERS OR AGENTS SHALL NOT BE RESPONSIBLE FOR THE ACCURACY OR COMPLETENESS OF SCANNED COPIES OF THIS PLAN SHEET.

GENERAL NOTES:

1. FOR COMPLETE RIGHT OF WAY AND ACCURATE ACCESS DATA, SEE RIGHT OF WAY RECORDS AT DISTRICT OFFICE.
2. THE ENGINEER SHALL VERIFY THE FINAL LOCATION OF THE PIEZOELECTRIC AXLE SENSOR PRIOR TO CONTRACTOR PERFORMING ANY WORK IN THE TRAVELED WAY OR SHOULDERS.
3. EXACT CONFIGURATION AND INSTALLATION PROCEDURES OF PIEZOELECTRIC AXLE SENSOR AND LOOP DETECTORS SHALL CONFORM TO THE REQUIREMENTS OF THE PIEZOELECTRIC AXLE SENSOR MANUFACTURER.
4. PIEZOELECTRIC AXLE SENSOR SHALL MATCH EXISTING ROADWAY PROFILE AND CROSS-SLOPE.

LEGEND

PIEZOELECTRIC AXLE SENSOR

DIRECTION OF TRAVEL

LOOP QUANTITY TABLE

LOCATION	DESCRIPTION	APPROXIMATE POST MILE	MAINLINE LOOPS (No. of LANES)
2	MCGOWAN ROAD	7.35	8(2NB/2SB)
3	FEATHER RIVER BLVD	11.07	4(2NB ONLY)
4	SOUTH OF YUBA RIVER BR	13.60	8(2NB/2SB)

PROJECT NOTES:

1 Exist 1½"C, RC 2 dlc AND 4 stc.
INSTALL 2 DLC AND 4 STC.

2 AB Exist LOOP CONDUCTORS. RC dh.
INSTALL DH AND CONDUIT TO pb.

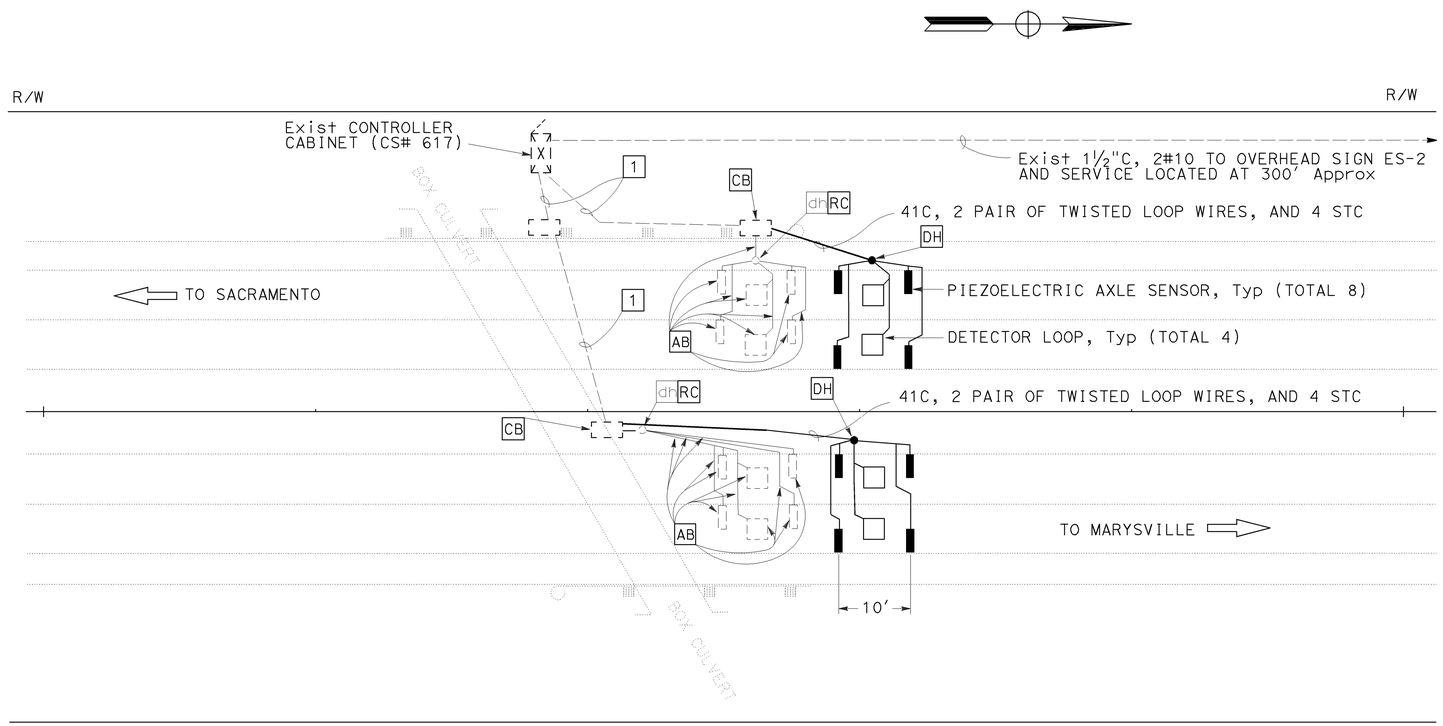

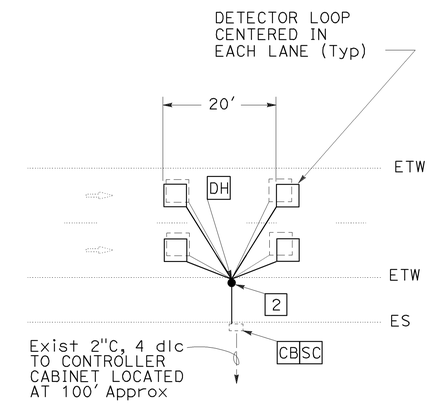

2-LANES

TYPICAL LOOP INSTALLATION DETAIL

LOCATION 2, 3 & 4

ABBREVIATIONS:

AVC - AUTOMATIC VEHICLE CLASSIFICATION
STC - SCREENED TRANSMISSION CABLE
stc - Exist SCREENED TRANSMISSION CABLE

LOCATION 1 (AVC)

CS# 617, PM 9.28

MODIFY TRAFFIC MONITORING STATION (COUNT)
MODIFY AUTOMATIC VEHICLE CLASSIFICATION SYSTEM

NO SCALE

THIS PLAN IS ACCURATE FOR ELECTRICAL WORK ONLY.

E-1

STATE OF CALIFORNIA - DEPARTMENT OF TRANSPORTATION
Caltrans
TRAFFIC ELECTRICAL DESIGN MARYSVILLE

FUNCTIONAL SUPERVISOR: STEVEN BLOCK
CALCULATED-DESIGNED BY: TOM McEWAN
CHECKED BY: RUPINDER PAL GILL
REVISED BY
DATE REVISED

LAST REVISION 04-29-10
DATE PLOTTED => 25-AUG-2010
TIME PLOTTED => 10:06

Dist	COUNTY	ROUTE	POST MILES TOTAL PROJECT	SHEET No.	TOTAL SHEETS
03	Yub	70	R7.0/13.6	84	113

R. P. Gill 7-26-10
REGISTERED ELECTRICAL ENGINEER

7-26-10
PLANS APPROVAL DATE

REGISTERED PROFESSIONAL ENGINEER
RUPINDER PAL GILL
No. 16642
Exp 06-30-12
ELECTRICAL
STATE OF CALIFORNIA

THE STATE OF CALIFORNIA OR ITS OFFICERS OR AGENTS SHALL NOT BE RESPONSIBLE FOR THE ACCURACY OR COMPLETENESS OF SCANNED COPIES OF THIS PLAN SHEET.

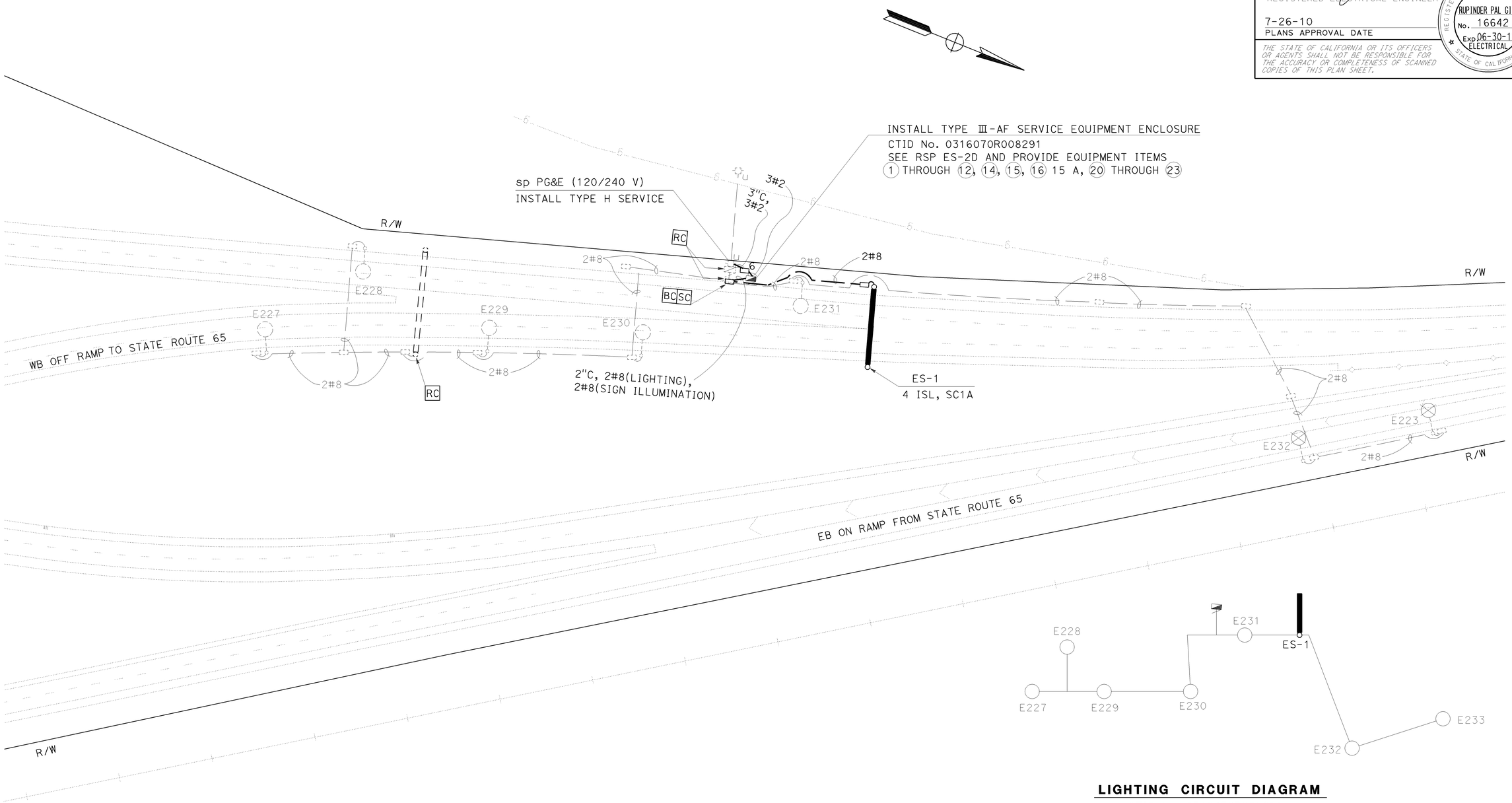

LIGHTING CIRCUIT DIAGRAM
CTID No. 0316070R008291

MODIFY SIGN ILLUMINATION

NO SCALE

E-2

THIS PLAN IS ACCURATE FOR ELECTRICAL WORK ONLY.

STATE OF CALIFORNIA - DEPARTMENT OF TRANSPORTATION
Caltrans
TRAFFIC ELECTRICAL DESIGN MARYSVILLE

FUNCTIONAL SUPERVISOR: STEVEN BLOCK
CALCULATED-DESIGNED BY: TOM McEWAN
CHECKED BY: RUPINDER PAL GILL
REVISED BY
DATE REVISED

LAST REVISION 04-29-10
DATE PLOTTED => 25-AUG-2010
TIME PLOTTED => 10:06

Dist	COUNTY	ROUTE	POST MILES TOTAL PROJECT	SHEET No.	TOTAL SHEETS
03	Yub	70	R7.0/13.6	85	113

R. P. Gill 7-26-10
REGISTERED ELECTRICAL ENGINEER

7-26-10
PLANS APPROVAL DATE

REGISTERED PROFESSIONAL ENGINEER
RUPINDER PAL GILL
No. 16642
Exp 06-30-12
ELECTRICAL
STATE OF CALIFORNIA

THE STATE OF CALIFORNIA OR ITS OFFICERS OR AGENTS SHALL NOT BE RESPONSIBLE FOR THE ACCURACY OR COMPLETENESS OF SCANNED COPIES OF THIS PLAN SHEET.

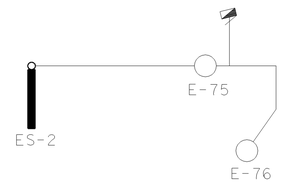

LIGHTING CIRCUIT DIAGRAM

CTID No. 0316070008900

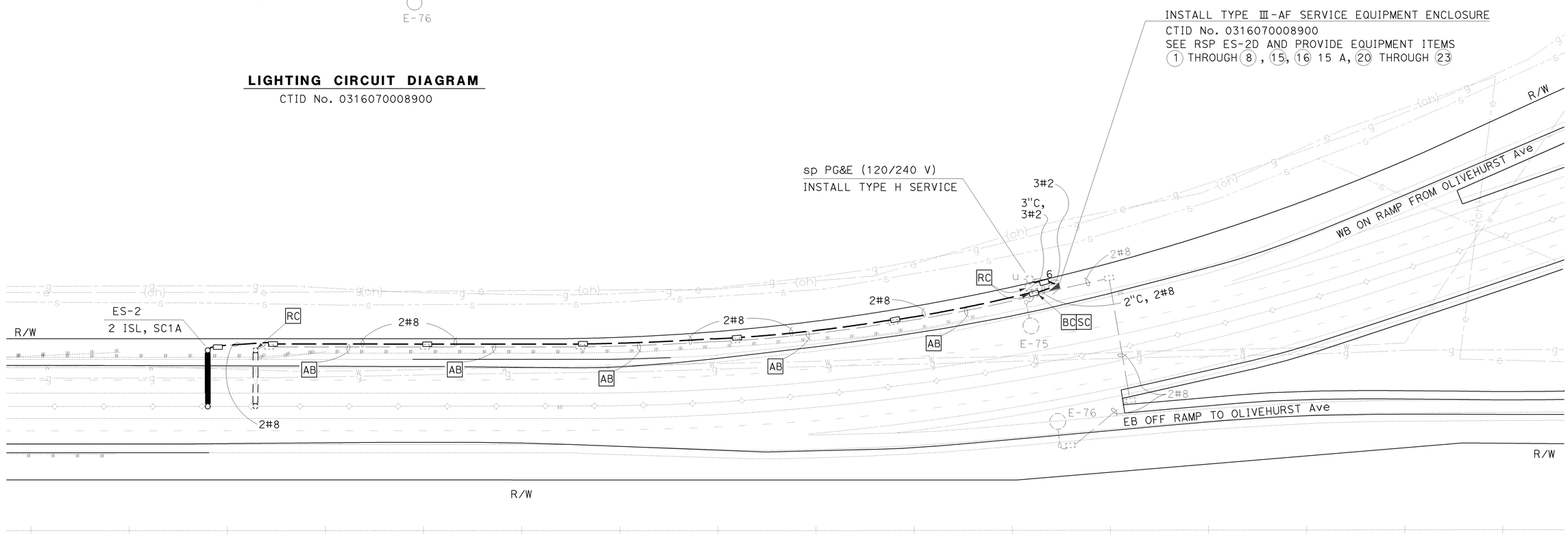

MODIFY SIGN ILLUMINATION

NO SCALE

THIS PLAN IS ACCURATE FOR ELECTRICAL WORK ONLY.

E-3

REVISED BY	DATE REVISED
TOM McEWAN	RUPINDER PAL GILL

CALCULATED-DESIGNED BY | CHECKED BY

FUNCTIONAL SUPERVISOR: STEVEN BLOCK

STATE OF CALIFORNIA - DEPARTMENT OF TRANSPORTATION

Caltrans

TRAFFIC ELECTRICAL DESIGN MARYSVILLE

LAST REVISION 04-29-10 | DATE PLOTTED => 25-AUG-2010 | TIME PLOTTED => 10:06

DIST	COUNTY	ROUTE	POST MILES TOTAL PROJECT	SHEET NO.	TOTAL SHEETS
03	Yub	70	R7.0/13.6	86	113

Randell D. Hiatt
REGISTERED CIVIL ENGINEER

June 6, 2008
PLANS APPROVAL DATE

REGISTERED PROFESSIONAL ENGINEER Randell D. Hiatt No. C50200 Exp. 6-30-09 CIVIL STATE OF CALIFORNIA

The State of California or its officers or agents shall not be responsible for the accuracy or completeness of electronic copies of this plan sheet.

To accompany plans dated 7-26-10

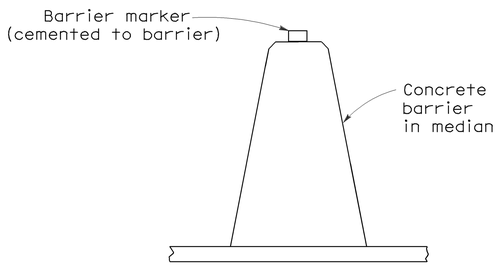

CONCRETE BARRIER TYPE 60 DELINEATION

See Notes 7 and 8

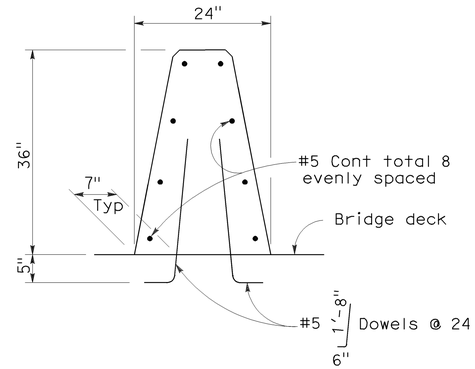

CONCRETE BARRIER TYPE 60A

Details similar to Type 60 except as noted.

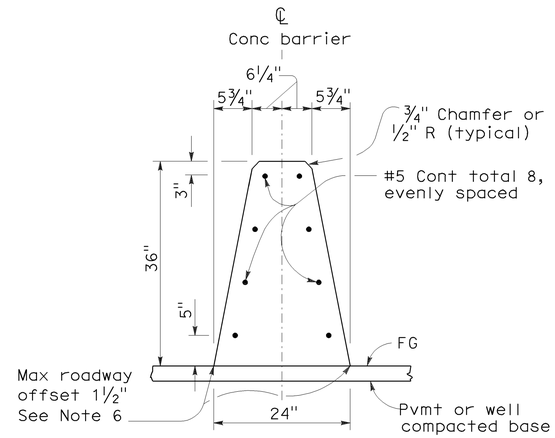

CONCRETE BARRIER TYPE 60

NOTES:

1. See Standard Plan A76B for details of Concrete Barrier Type 60 end anchors, connection to structures and transitions to Concrete Barrier Type 50 and Concrete Barrier Type 60S.
2. See Standard Plan A76C for Concrete Barrier Type 60 transitions at bridge column and sign pedestals.
3. Where glare screen is required on Concrete Barrier Type 60, use Concrete Barrier Type 60G.
4. Where the concrete barrier is added to the face of existing concrete structure, match existing weep holes.
5. Expansion joints in concrete barrier shall be located at all deck, pavement and principal wall joints. Expansion joint filler material shall be the same size as joint or ½" minimum.
6. Where roadway offset is greater than 1½", see Concrete Barrier Type 60C.
7. Barrier delineation to be used when required by the Special Provisions.
8. Spacing of barrier markers to match spacing of raised pavement markers on the adjacent median edgeline pavement delineation.
9. Reinforcing stirrup not required for roadway offsets less than 1'-0".
10. For roadway surfaces offset greater than 1½" to 3", no rebars required. For roadway surfaces offset greater than 3" to 8" use two #4 rebars at 3" above the lower roadway surface. For roadway surfaces offset greater than 8" to 12", use two #4 rebars at 3" above the lower roadway surface and two #4 rebars at 8" above the lower roadway surface. For roadway surfaces offset greater than 12" to 36", use two #4 rebars at 3" above the lower roadway surface and two #4 rebars at every 8" increment vertical spacing above the first two #4 rebars.

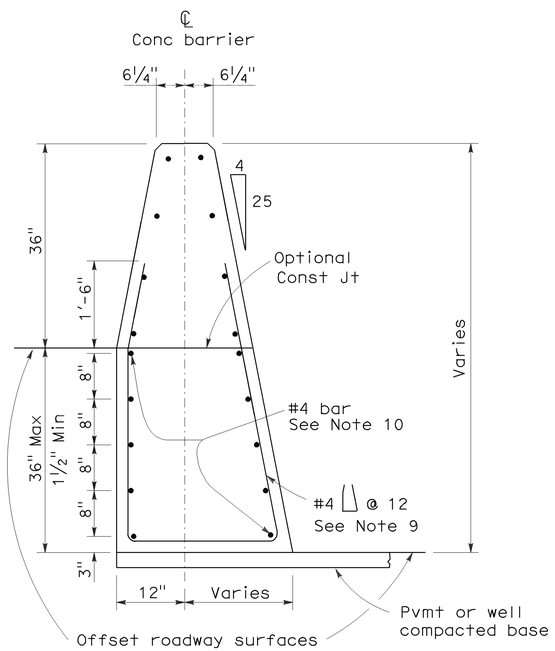

CONCRETE BARRIER TYPE 60C

Details similar to Type 60 except as noted.
Concrete barrier end anchor when necessary.
36" roadway surfaces offset shown.

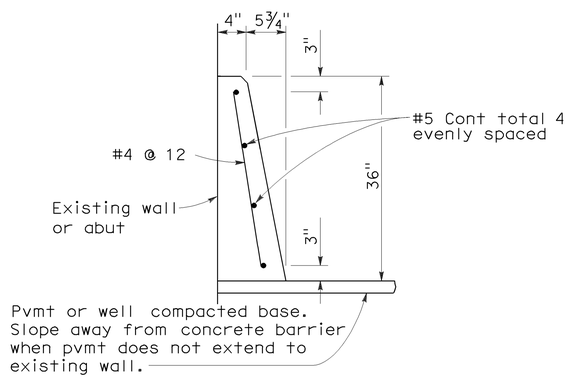

CONCRETE BARRIER TYPE 60D

STATE OF CALIFORNIA
DEPARTMENT OF TRANSPORTATION

CONCRETE BARRIER TYPE 60

NO SCALE

RSP A76A DATED JUNE 6, 2008 SUPERSEDES STANDARD PLAN A76A
DATED MAY 1, 2006 - PAGE 29 OF THE STANDARD PLANS BOOK DATED MAY 2006.

REVISED STANDARD PLAN RSP A76A

2006 REVISED STANDARD PLAN RSP A76A

5-21-08

DIST	COUNTY	ROUTE	POST MILES TOTAL PROJECT	SHEET NO.	TOTAL SHEETS
03	Yub	70	R7.0/13.6	87	113

Randell D. Hiatt
REGISTERED CIVIL ENGINEER

June 6, 2008
PLANS APPROVAL DATE

REGISTERED PROFESSIONAL ENGINEER
Randell D. Hiatt
No. C50200
Exp. 6-30-09
CIVIL
STATE OF CALIFORNIA

The State of California or its officers or agents shall not be responsible for the accuracy or completeness of electronic copies of this plan sheet.

To accompany plans dated 7-26-10

NOTES:

1. When necessary to place dike in front of face of guard railing, only Type C dike may be used. For dike details, see Standard Plan A87B.
2. For standard railing post embedment, see Standard Plans A77C3.
3. Guard railing delineation to be used where shown on the Project Plans.
4. When dike or curb is placed under guard railing, the maximum height of the dike or curb shall be 4". Mountable dike should not be used. For dike and curb details, see Revised Standard Plans RSP A87A and Standard Plan A87B.
5. For details of typical distance between the face of rail and hinge point, see Standard Plan A77C3.

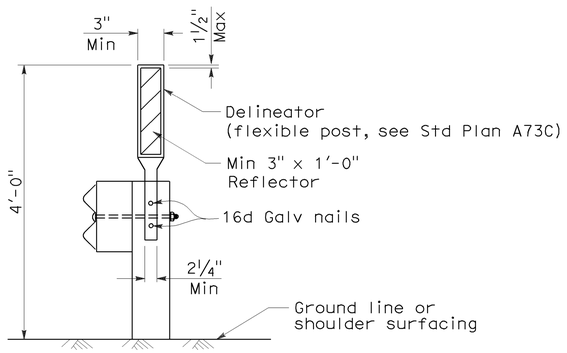

GUARD RAILING DELINEATION

See Note 3

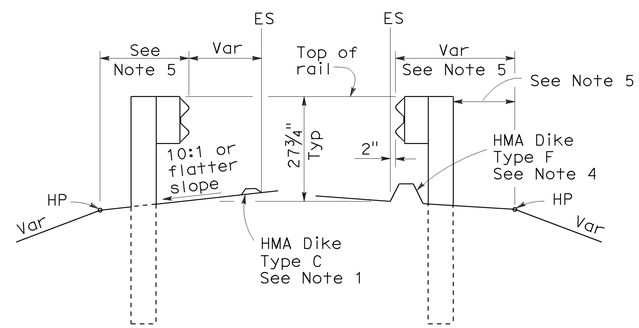

DIKE POSITIONING

See Note 1

STATE OF CALIFORNIA
DEPARTMENT OF TRANSPORTATION

METAL BEAM GUARD RAILING TYPICAL RAILING DELINEATION AND DIKE POSITIONING DETAILS

NO SCALE

RSP A77C4 DATED JUNE 6, 2008 SUPERSEDES STANDARD PLAN A77C4
DATED MAY 1, 2006 - PAGE 47 OF THE STANDARD PLANS BOOK DATED MAY 2006.

REVISED STANDARD PLAN RSP A77C4

2006 REVISED STANDARD PLAN RSP A77C4

12-10-07

DIST	COUNTY	ROUTE	POST MILES TOTAL PROJECT	SHEET NO.	TOTAL SHEETS
03	Yub	70	R7.0/13.6	88	113

Randell D. Hiatt
REGISTERED CIVIL ENGINEER

October 20, 2006
PLANS APPROVAL DATE

REGISTERED PROFESSIONAL ENGINEER
Randell D. Hiatt
No. C50200
Exp. 6-30-07
CIVIL
STATE OF CALIFORNIA

The State of California or its officers or agents shall not be responsible for the accuracy or completeness of electronic copies of this plan sheet.

To accompany plans dated 7-26-10

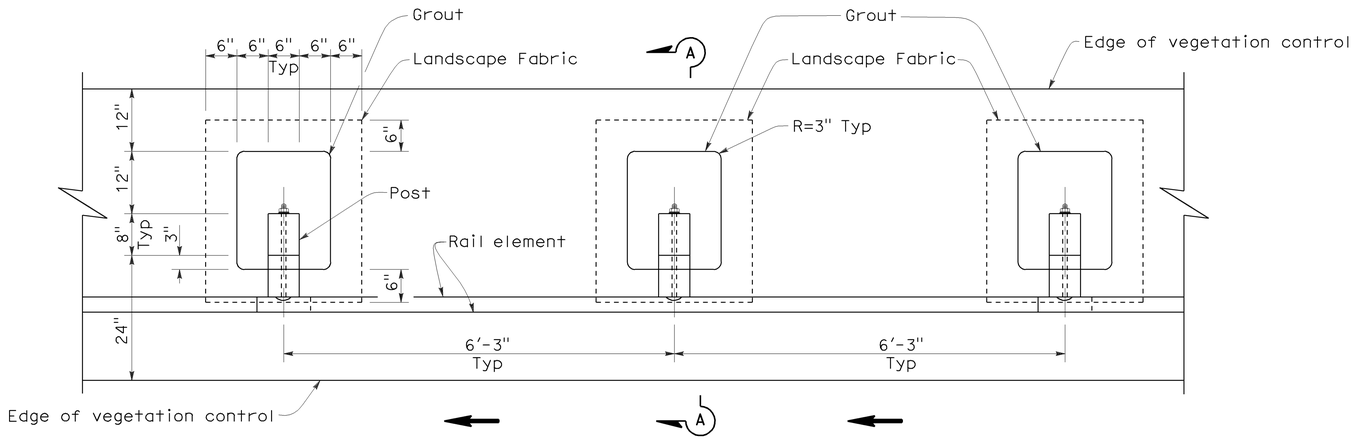

PLAN

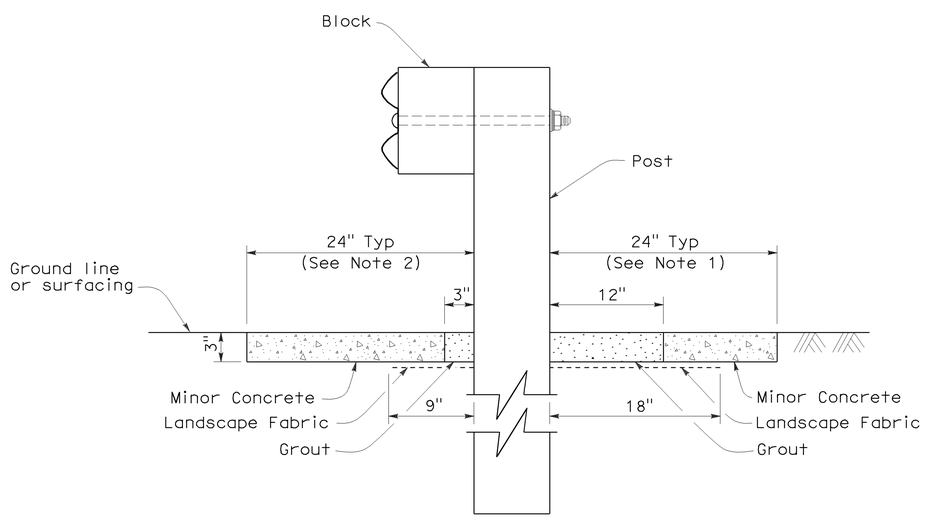

SECTION A-A

NOTES:

1. Where the distance between back of post and hinge point is less than 24", vegetation control to be constructed flush with the back edge of the post.
2. Where dike is constructed under railing, construct vegetation control to back edge of dike. Where paved shoulder is constructed within 24" in front of the post, construct vegetation control to the edge of paved shoulder.
3. Direction of adjacent traffic indicated by ← .

STATE OF CALIFORNIA
DEPARTMENT OF TRANSPORTATION

METAL BEAM GUARD RAILING TYPICAL VEGETATION CONTROL STANDARD RAILING SECTION

NO SCALE

NSP A77C5 DATED OCTOBER 20, 2006 SUPPLEMENTS THE STANDARD PLANS BOOK DATED MAY 2006.

NEW STANDARD PLAN NSP A77C5

2006 NEW STANDARD PLAN NSP A77C5

7-17-06

DIST	COUNTY	ROUTE	POST MILES TOTAL PROJECT	SHEET NO.	TOTAL SHEETS
03	Yub	70	R7.0/13.6	89	113

Randell D. Hiatt
REGISTERED CIVIL ENGINEER

October 20, 2006
PLANS APPROVAL DATE

REGISTERED PROFESSIONAL ENGINEER
Randell D. Hiatt
No. C50200
Exp. 6-30-07
CIVIL
STATE OF CALIFORNIA

The State of California or its officers or agents shall not be responsible for the accuracy or completeness of electronic copies of this plan sheet.

To accompany plans dated 7-26-10

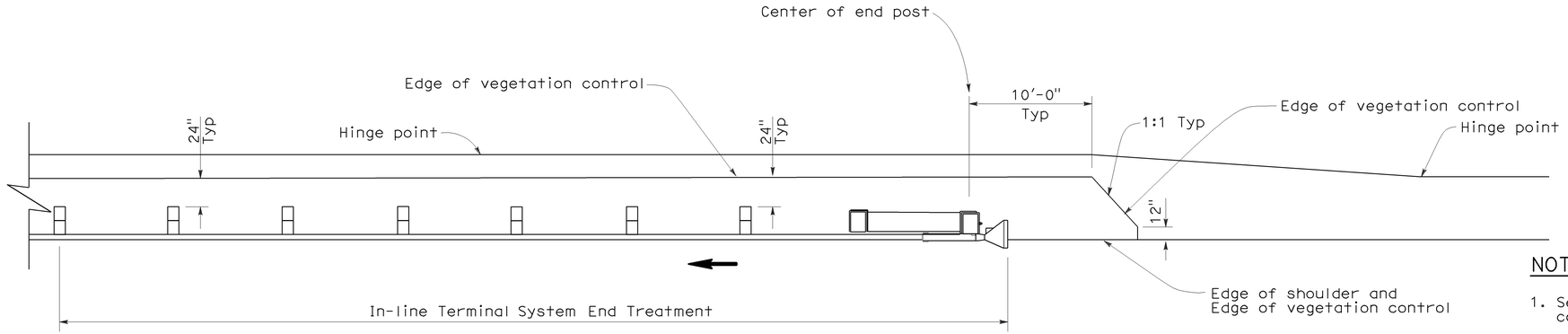

PLAN

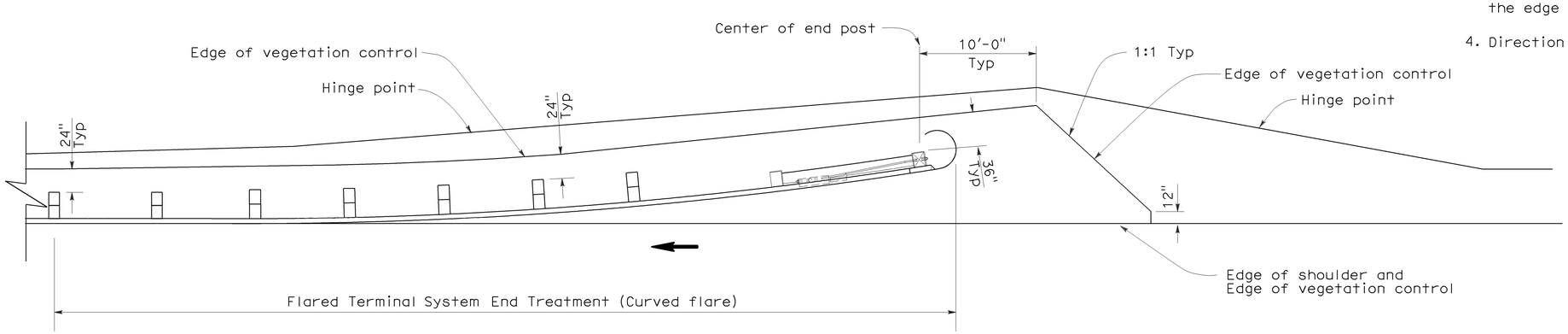

PLAN

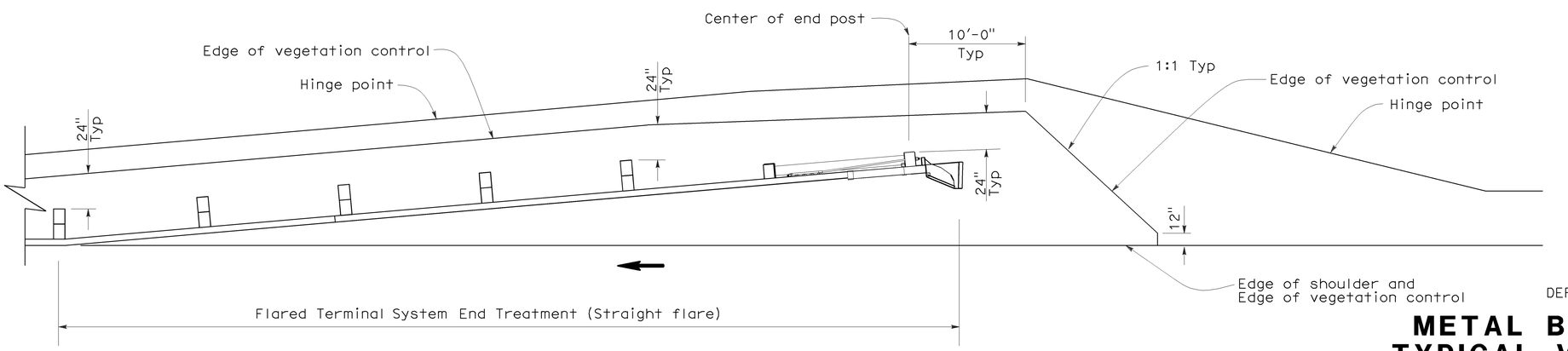

PLAN

NOTES:

1. See New Standard Plan NSP A77C5 for additional vegetation control details.
2. Where the distance between back of post and hinge point is less than 24", vegetation control to be constructed flush with the back edge of the post.
3. Where dike is constructed under railing, construct vegetation control to back edge of dike. Where paved shoulder is constructed within 24" in front of the post, construct vegetation control to the edge of paved shoulder.
4. Direction of adjacent traffic indicated by ←.

STATE OF CALIFORNIA
DEPARTMENT OF TRANSPORTATION

METAL BEAM GUARD RAILING TYPICAL VEGETATION CONTROL FOR TERMINAL SYSTEM END TREATMENTS

NO SCALE

NSP A77C6 DATED OCTOBER 20, 2006 SUPPLEMENTS THE STANDARD PLANS BOOK DATED MAY 2006.

NEW STANDARD PLAN NSP A77C6

2006 NEW STANDARD PLAN NSP A77C6

7-17-06

DIST	COUNTY	ROUTE	POST MILES TOTAL PROJECT	SHEET NO.	TOTAL SHEETS
03	Yub	70	R7.0/13.6	90	113

Randell D. Hiatt
REGISTERED CIVIL ENGINEER

June 6, 2008
PLANS APPROVAL DATE

REGISTERED PROFESSIONAL ENGINEER
Randell D. Hiatt
No. C50200
Exp. 6-30-09
CIVIL
STATE OF CALIFORNIA

The State of California or its officers or agents shall not be responsible for the accuracy or completeness of electronic copies of this plan sheet.

To accompany plans dated 7-26-10

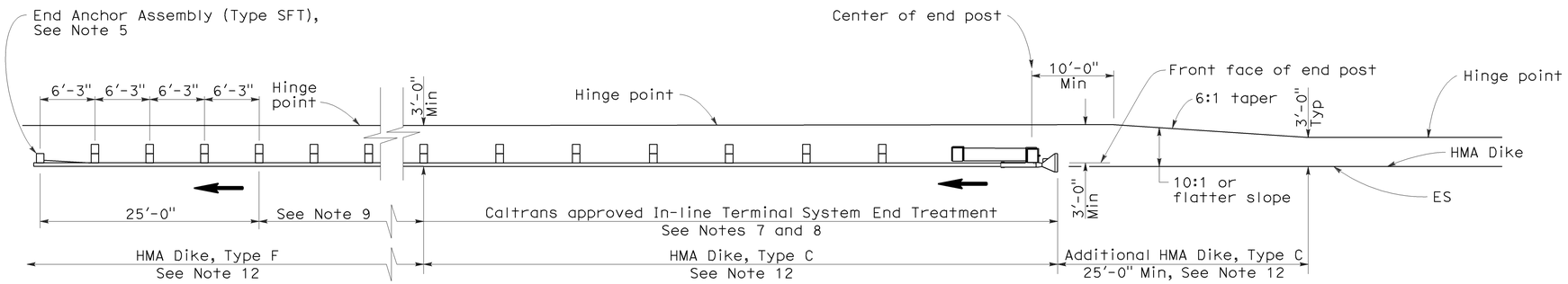

TYPE 11A LAYOUT

(EMBANKMENT GUARD INSTALLATION WITH IN-LINE END TREATMENT AT TRAFFIC APPROACH END OF RAILING)
See Note 6

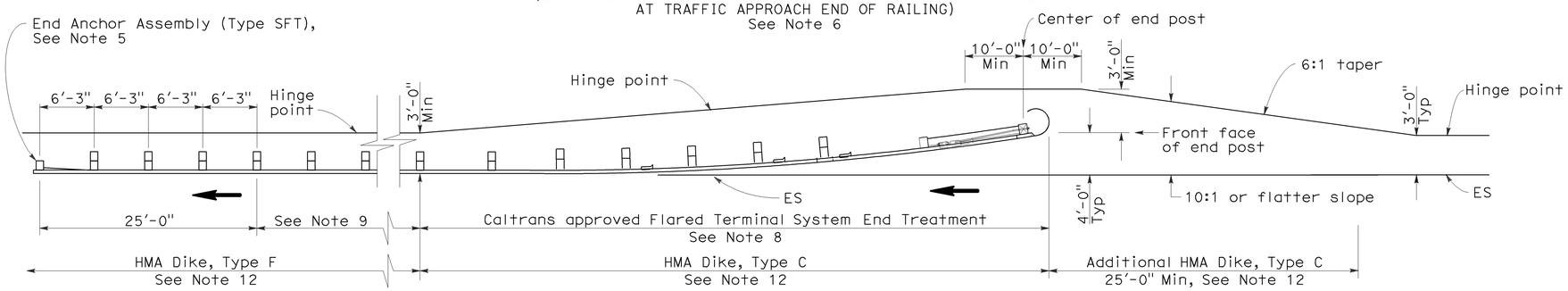

TYPE 11B LAYOUT

(EMBANKMENT GUARD RAILING INSTALLATION WITH FLARED END TREATMENT AT TRAFFIC APPROACH END OF RAILING)
See Note 6

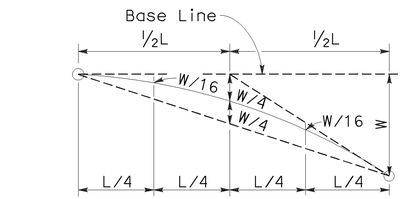

TYPICAL PARABOLIC LAYOUT

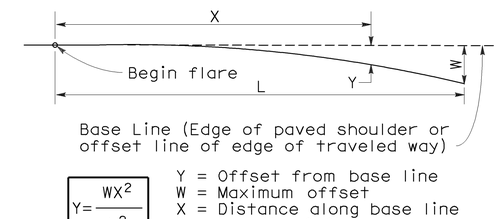

$$Y = \frac{WX^2}{L^2}$$

Y = Offset from base line
W = Maximum offset
X = Distance along base line
L = Length of flare

PARABOLIC FLARE OFFSETS

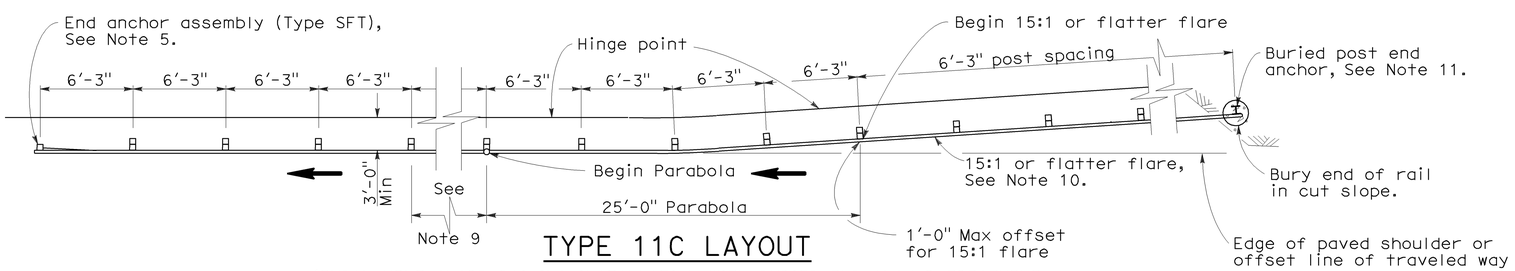

TYPE 11C LAYOUT

(EMBANKMENT GUARD RAILING INSTALLATION WITH BURIED END ANCHOR TREATMENT AT TRAFFIC APPROACH END OF RAILING)
See Notes 6 and 12

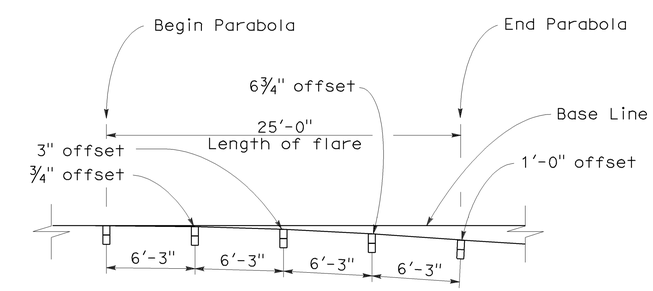

TYPICAL FLARE OFFSETS FOR 1 FOOT MAX END OFFSET

NOTES:

1. Line post, blocks and hardware to be used are shown on Standard Plans A77A1, A77A2, A77B1, A77C1, and A77C2.
2. Guard rail post spacing to be 6'-3" center to center, except as otherwise noted.
3. Except as noted, line posts are 6" x 8" x 6'-0" wood with 6" x 8" x 1'-2" wood blocks. W6 x 9 steel posts, 6'-0" in length, with 6" x 8" x 1'-2" notched wood blocks or recycled plastic blocks may be used for 6" x 8" x 6'-0" wood post with 6" x 8" x 1'-2" wood blocks where applicable and when specified.
4. Direction of adjacent traffic indicated by ➡.
5. For End Anchor Assembly (Type SFT) details, see Standard Plan A77H1.
6. Layout Types 11A, 11B or 11C are typically used where guard railing is recommended to shield embankment slopes and a crashworthy end treatment is required for only one direction of traffic.
7. In-line Terminal System End Treatments are used where site conditions will not accommodate a flared end treatment.
8. The type of terminal system end treatment to be used will be shown on the Project Plans.
9. Dependent on site conditions (embankment height and side slope), construction of additional guard railing (length equal to multiples of 12'-6" with 6'-3" post spacing) may be advisable.
10. The 15:1 or flatter flare used with buried end anchors is based on the edge of the paved shoulder or offset line of edge of the traveled way. The length of guard railing within the 15:1 or flatter flare is based on site conditions and should be a length equal to multiples of 12'-6".
11. For details of the buried post end anchor used with Type 11C Layout, see Standard Plan A77I2.
12. Where placement of dike is required with guard railing installations, see Revised Standard Plan RSP A77C4 for dike positioning details.

STATE OF CALIFORNIA
DEPARTMENT OF TRANSPORTATION

METAL BEAM GUARD RAILING TYPICAL LAYOUTS FOR EMBANKMENTS

NO SCALE

RSP A77E1 DATED JUNE 6, 2008 SUPERSEDES STANDARD PLAN A77E1 DATED MAY 1, 2006 - PAGE 48 OF THE STANDARD PLANS BOOK DATED MAY 2006.

REVISED STANDARD PLAN RSP A77E1

2006 REVISED STANDARD PLAN RSP A77E1

12-10-07

DIST	COUNTY	ROUTE	POST MILES TOTAL PROJECT	SHEET NO.	TOTAL SHEETS
03	Yub	70	R7.0/13.6	91	113

Randell D. Hiatt
REGISTERED CIVIL ENGINEER

June 6, 2008
PLANS APPROVAL DATE

REGISTERED PROFESSIONAL ENGINEER Randell D. Hiatt No. C50200 Exp. 6-30-09 CIVIL STATE OF CALIFORNIA

The State of California or its officers or agents shall not be responsible for the accuracy or completeness of electronic copies of this plan sheet.

To accompany plans dated 7-26-10

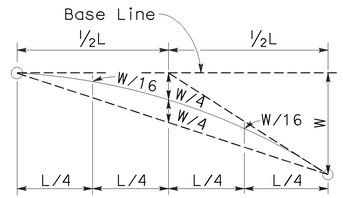

TYPICAL PARABOLIC LAYOUT

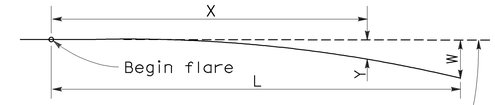

Base Line (Edge of paved shoulder or offset line of edge of traveled way)

$$Y = \frac{WX^2}{L^2}$$

Y = Offset from base line
W = Maximum offset
X = Distance along base line
L = Length of flare

PARABOLIC FLARE OFFSETS

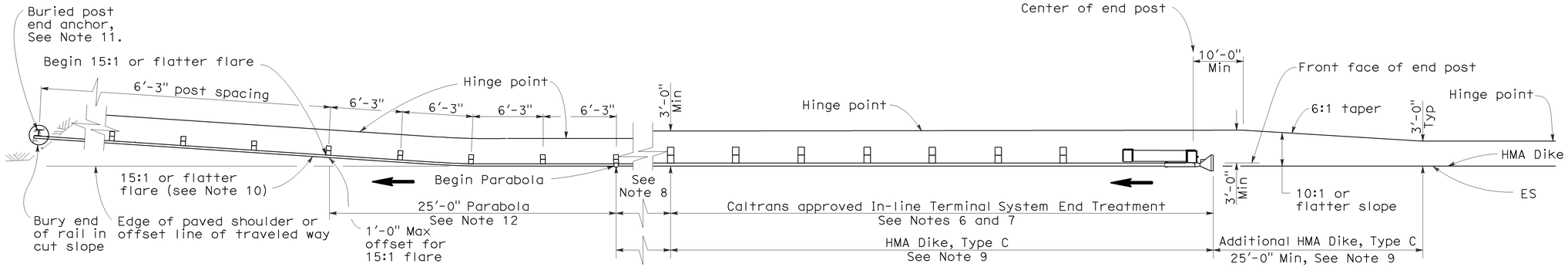

TYPE 11I LAYOUT

(EMBANKMENT GUARD RAILING INSTALLATION WITH IN-LINE END TREATMENT AND A BURIED END ANCHOR TREATMENT AT THE ENDS OF RAILING)
See Note 5

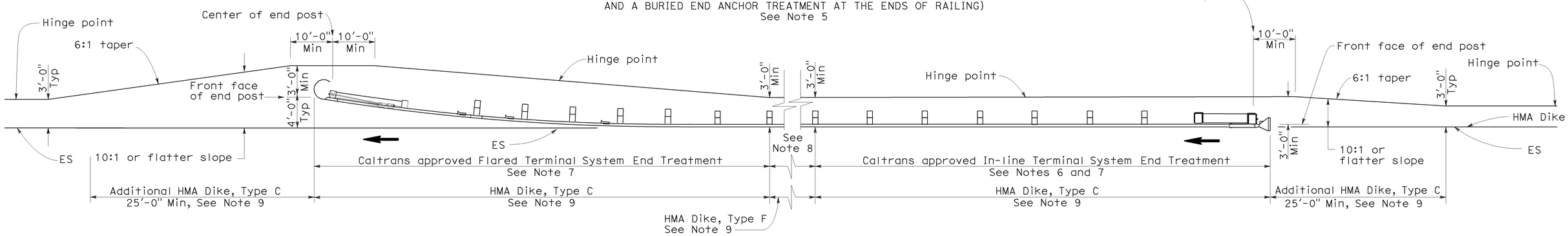

TYPE 11J LAYOUT

(EMBANKMENT GUARD RAILING INSTALLATION WITH IN-LINE END TREATMENT AND FLARED END TREATMENT AT THE ENDS OF RAILING)
See Note 5

NOTES:

1. Line post, blocks and hardware to be used are shown on Standard Plans A77A1, A77A2, A77B1, A77C1 and A77C2.
2. Guard rail post spacing to be 6'-3" center to center, except as otherwise noted.
3. Except as noted, line posts are 6" x 8" x 6'-0" wood with 6" x 8" x 1'-2" wood blocks. W6 x 9 steel posts, 6'-0" in length, with 6" x 8" x 1'-2" notched wood blocks or plastic blocks may be used for 6" x 8" x 6'-0" wood post with 6" x 8" x 1'-2" wood blocks where applicable and when specified.
4. Direction of adjacent traffic indicated by ⟶.
5. Layout Types 11D through 11L, shown on the A77E Series of Revised Standard Plans, are typically used where guard railing is recommended to shield embamkment slopes and a crashworthy end treatment is required for both directions of traffic.
6. In-line Terminal System End Treatments are used where site conditions will not accommodate a flared end treatment.
7. The type of terminal system end treatment to be used will be shown on the Project Plans.
8. Dependent on site conditions (embankment height and side slope), construction of additional guard railing (length equal to multiples of 12'-6" with 6'-3" post spacing) may be advisable.
9. Where placement of dike is required with guard railing installations, see Revised Standard Plan RSP A77C4 for dike positioning details.
10. The 15:1 or flatter flare used with buried end anchors is based on the edge of the paved shoulder or offset line of edge of the traveled way. The length of guard railing within the 15:1 or flatter flare is based on site conditions and should be a length equal to multiples of 12'-6".
11. For details of the buried post end anchor used with Type 11I Layout, see Standard Plan A77I2.
12. For typical flare offsets for 25'-0" length parabola with maximum offset of 1'-0", see Revised Standard Plan RSP A77E1.

STATE OF CALIFORNIA
DEPARTMENT OF TRANSPORTATION

METAL BEAM GUARD RAILING TYPICAL LAYOUTS FOR EMBANKMENTS

NO SCALE

RSP A77E5 DATED JUNE 6, 2008 SUPERSEDES STANDARD PLAN A77E5 DATED MAY 1, 2006 - PAGE 52 OF THE STANDARD PLANS BOOK DATED MAY 2006.

REVISED STANDARD PLAN RSP A77E5

2006 REVISED STANDARD PLAN RSP A77E5

12-10-07

DIST	COUNTY	ROUTE	POST MILES TOTAL PROJECT	SHEET NO.	TOTAL SHEETS
03	Yub	70	R7.0/13.6	92	113

Randell D. Hiatt
REGISTERED CIVIL ENGINEER

June 6, 2008
PLANS APPROVAL DATE

REGISTERED PROFESSIONAL ENGINEER
Randell D. Hiatt
No. C50200
Exp. 6-30-09
CIVIL
STATE OF CALIFORNIA

The State of California or its officers or agents shall not be responsible for the accuracy or completeness of electronic copies of this plan sheet.

To accompany plans dated 7-26-10

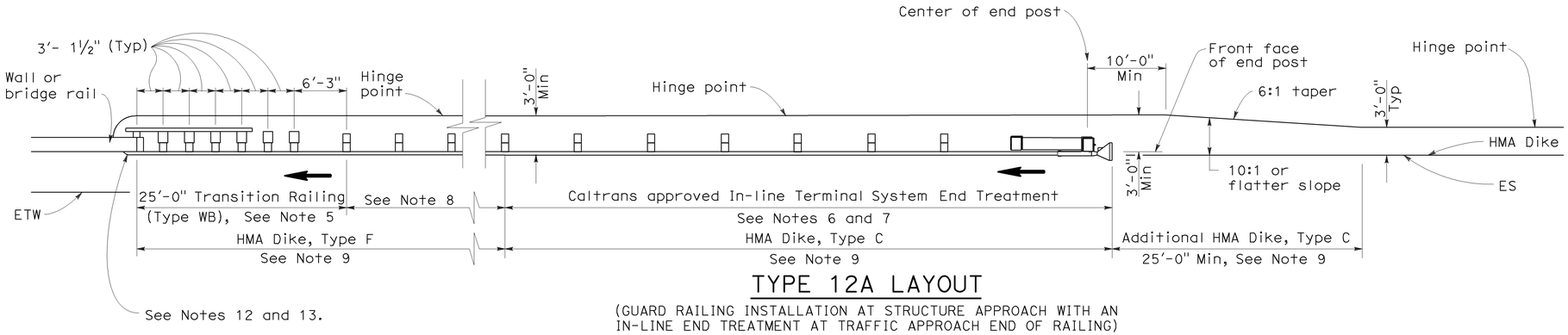

TYPE 12A LAYOUT

(GUARD RAILING INSTALLATION AT STRUCTURE APPROACH WITH AN IN-LINE END TREATMENT AT TRAFFIC APPROACH END OF RAILING)
See Notes 10

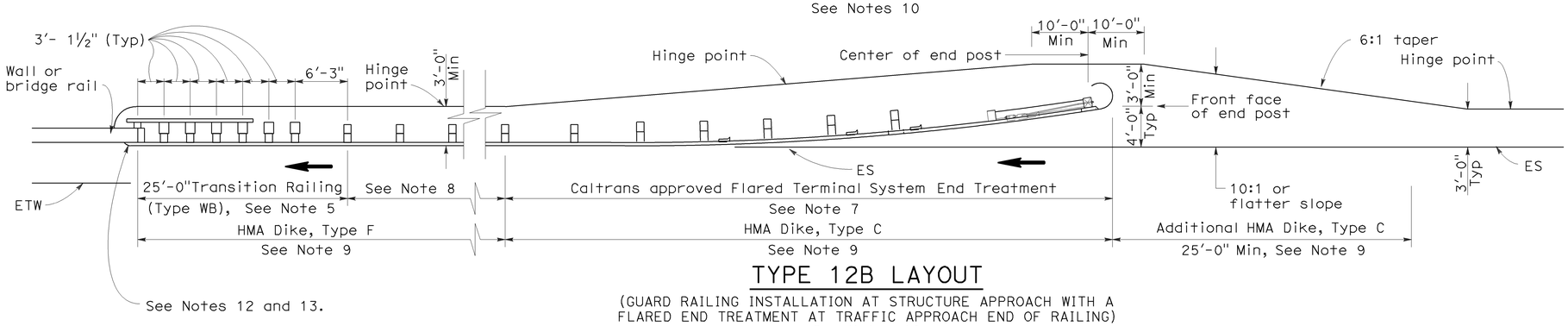

TYPE 12B LAYOUT

(GUARD RAILING INSTALLATION AT STRUCTURE APPROACH WITH A FLARED END TREATMENT AT TRAFFIC APPROACH END OF RAILING)
See Notes 10

NOTES:

1. Line post, blocks and hardware to be used are shown on Standard Plans A77A1, A77A2, A77B1, A77C1 and A77C2.
2. Guard rail post spacing to be 6'-3" center to center, except as otherwise noted.
3. Except as noted, line posts are 6" x 8" x 6'-0" wood with 6" x 8" x 1'-2" wood blocks. W6 x 9 steel posts, 6'-0" in length, with 6" x 8" x 1'-2" notched wood blocks or plastic blocks may be used for 6" x 8" x 6'-0" wood posts with 6" x 8" x 1'-2" wood blocks where applicable and when specified.
4. Direction of adjacent traffic indicated by ➡.
5. For Transition Railing (Type WB) details for Types 12A and 12B Layouts, see Standard Plan A77J4.
6. In-line Terminal System End Treatments are used where site conditions will not accommodate a flared end treatment.
7. The type of terminal system end treatment to be used will be shown on the Project Plans.
8. Dependent on site conditions (embankment height, side slopes, or other fixed objects), it may be advisable to construct additional guard railing (a length equal to multiples of 12'-6" with 6'-3" post spacing) between the transition railing and end treatment.
9. Where placement of dike is required with guard railing installations, see Revised Standard Plan RSP A77C4 for dike positioning details.
10. Type 12A or Type 12B Layouts are typically used:
    a. To the right of approaching traffic, at the end of a structure, on two-lane conventional highway where the roadbed width across the structure is less than 40 feet.
    b. To the left of approaching traffic, at the end of a structure, on two-lane conventional highway where the roadbed width across the structure is less than 40 feet.
    c. To the right of approaching traffic at the end of each structure on multilane freeways or expressways with separate adjacent or parallel bridges.
    d. To the right of approaching traffic at the end of the structure on multilane freeways or expressways with decked median on the bridge.
11. See Revised Standard Plan RSP A77F3 for typical layout used left of approaching traffic at the ends of each structure on multilane freeways or expressways with separate adjacent or parallel bridges.
12. For additional details of typical connections to bridge rail, see Connection Detail AA on Revised Standard Plans RSP A77J1 and RSP A77J2 and Connection Detail FF on Standard Plans A77K1 and A77K2.
13. For additional details of a typical connection to walls or abutments, see Standard Plan A77J3.

STATE OF CALIFORNIA
DEPARTMENT OF TRANSPORTATION

METAL BEAM GUARD RAILING TYPICAL LAYOUTS FOR STRUCTURE APPROACH

NO SCALE

RSP A77F1 DATED JUNE 6, 2008 SUPERSEDES STANDARD PLAN A77F1
DATED MAY 1, 2006 - PAGE 54 OF THE STANDARD PLANS BOOK DATED MAY 2006.

REVISED STANDARD PLAN RSP A77F1

2006 REVISED STANDARD PLAN RSP A77F1

DIST	COUNTY	ROUTE	POST MILES TOTAL PROJECT	SHEET NO.	TOTAL SHEETS
03	Yub	70	R7.0/13.6	93	113

Randell D. Hiatt
REGISTERED CIVIL ENGINEER

June 6, 2008
PLANS APPROVAL DATE

REGISTERED PROFESSIONAL ENGINEER Randell D. Hiatt No. C50200 Exp. 6-30-09 CIVIL STATE OF CALIFORNIA

The State of California or its officers or agents shall not be responsible for the accuracy or completeness of electronic copies of this plan sheet.

To accompany plans dated 7-26-10

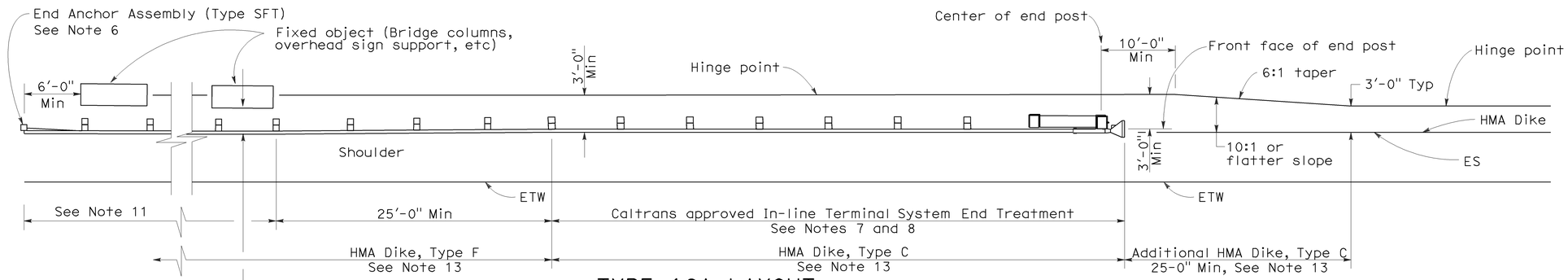

TYPE 16A LAYOUT

(GUARD RAILING INSTALLATION AT ROADSIDE FIXED OBJECT OR OBJECTS WITH AN IN-LINE END TREATMENT AT TRAFFIC APPROACH END OF RAILING)
See Notes 12 and 13

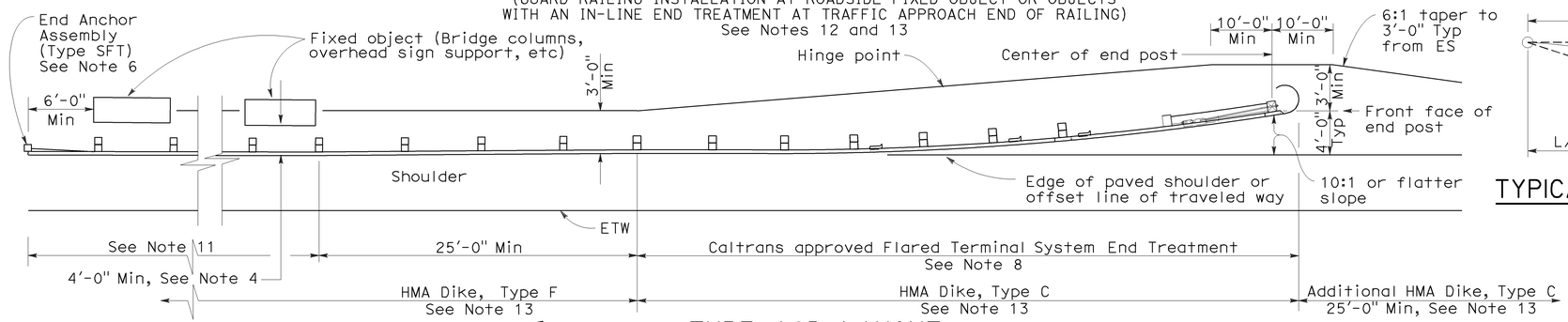

TYPE 16B LAYOUT

(GUARD RAILING INSTALLATION AT ROADSIDE FIXED OBJECT OR OBJECTS WITH A FLARED END TREATMENT AT TRAFFIC APPROACH END OF RAILING)
See Notes 12 and 13

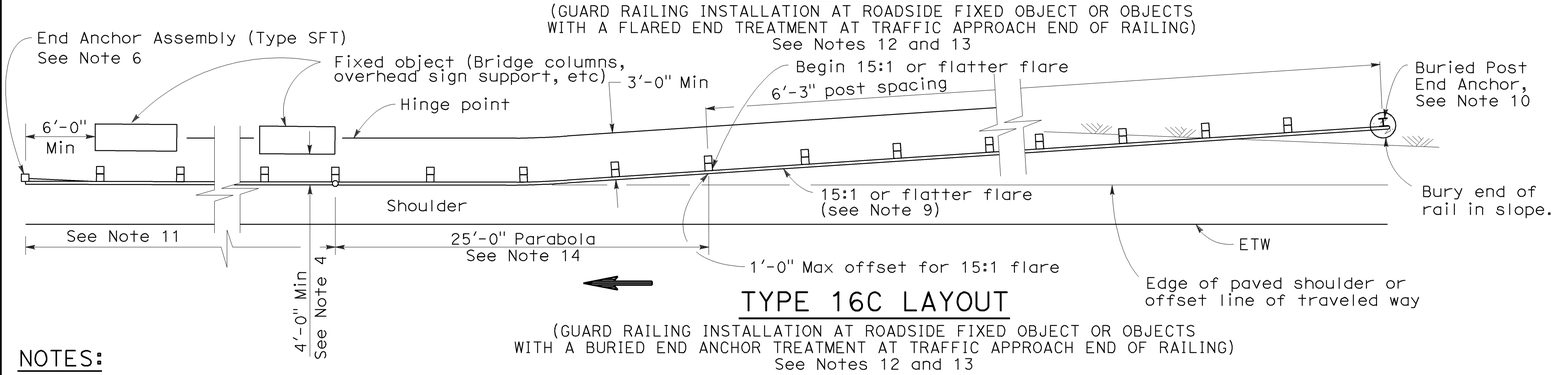

TYPE 16C LAYOUT

(GUARD RAILING INSTALLATION AT ROADSIDE FIXED OBJECT OR OBJECTS WITH A BURIED END ANCHOR TREATMENT AT TRAFFIC APPROACH END OF RAILING)
See Notes 12 and 13

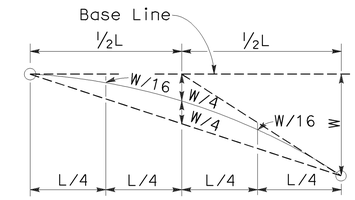

TYPICAL PARABOLIC LAYOUT

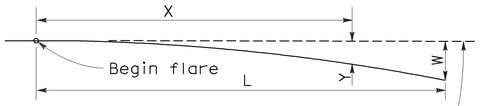

Base Line (Edge of paved shoulder or offset line of edge of traveled way)

$$Y = \frac{WX^2}{L^2}$$

Y = Offset from base line
W = Maximum offset
X = Distance along base line
L = Length of flare

PARABOLIC FLARE OFFSETS

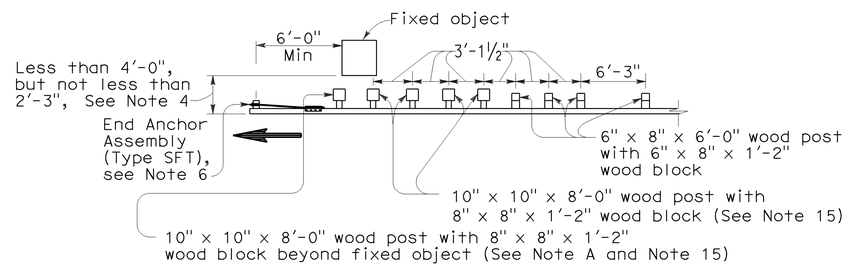

NOTE A: For a series of fixed objects (bridge columns, overhead sign supports, etc.) additional 10" x 10" x 8'-0" wood post with 8" x 8" x 1'-2" wood blocks at 3'-1½" center to center spacing are to be used between fixed objects.

STRENGTHENED RAILING SECTIONS FOR FIXED OBJECT

Use strengthened railing sections with Types 16A, 16B or 16C Layouts where minimum clearance between the face of the guard railing and fixed object(s) is less than 4'-0", but not less than 2'-3". See Note 4

NOTES:

1. Line post, blocks and hardware to be used are shown on Revised Standard Plans A77A1, A77A2, A77B1, A77C1 and A77C2.
2. Guard railing post spacing to be 6'-3" center to center, except as otherwise noted.
3. Except as noted, line posts are 6" x 8" x 6'-0" wood with 6" x 8" x 1'-2" wood blocks. W6 x 9 steel posts, 6'-0" in length, with 6" x 8" x 1'-2" notched wood blocks or notched recycled plastic blocks may be used for 6" x 8" x 6'-0" wood line posts with 6" x 8" x 1'-2" wood blocks where applicable and when specified.
4. A 4'-0" minimum clearance is required between the face of the railing and the face of a fixed object located directly behind standard guard railing sections with post spacing of 6'-3". Construct guard railing as shown in the detail "Strengthened Railing Sections for Fixed Objects" on this plan, where the clearance between the face of the railing and the face of a fixed object is less than 4'-0", but not less than 2'-3". Where the clearance is less than 2'-3", a concrete wall or barrier should be constructed to shield the fixed object(s).
5. Direction of adjacent traffic indicated by ⟶.
6. For End Anchor Assembly (Type SFT) details, see Standard Plan A77H1.
7. In-line Terminal System End Treatments are used where site conditions will not accommodate a flared end treatment.
8. The type of terminal system to be used will be shown on the Project Plans.
9. The 15:1 or flatter flare used with Type 16C Layout is based on the edge of the paved shoulder or offset line of edge of the traveled way. The length of guard railing within the 15:1 or flatter flare is based on site conditions and should be a length equal to multiples of 12'-6".
10. For details of the Buried Post End Anchor used with Type 16C Layout, see Standard Plan A77I2.
11. As site conditions dictate, construct additional guard railing to shield fixed object(s). Additional guard railing length equal to multiples of 12'-6". Post spacing at 6'-3" except as specified in Note 4.
12. Layout Types 16A, 16B or 16C are typically used where guard railing is recommended to shield roadside fixed object(s) and a crashworthy end treatment is required for only one direction of traffic.
13. Where placement of dike is required with guard railing, see Revised Standard Plan RSP A77C4 for dike positioning details.
14. For typical flare offsets for 25'-0" length parabola with maximum offset of 1'-0", see Revised Standard Plan RSP A77E1.
15. W6 x 15 steel post, 8'-0" in length, with 8" x 8" x 1'-2" notched wood block or notched recycled plastic blocks may be used in place of the 10" x 10" x 8'-0" wood post with 8" x 8" x 1'-2" wood block shown in the "Strengthened Railing Sections Detail".

STATE OF CALIFORNIA
DEPARTMENT OF TRANSPORTATION

METAL BEAM GUARD RAILING TYPICAL LAYOUTS FOR ROADSIDE FIXED OBJECTS

NO SCALE

RSP A77G3 DATED JUNE 6, 2008 SUPERSEDES STANDARD PLAN A77G3 DATED MAY 1, 2006 - PAGE 61 OF THE STANDARD PLANS BOOK DATED MAY 2006.

REVISED STANDARD PLAN RSP A77G3

2006 REVISED STANDARD PLAN RSP A77G3

12-10-07

DIST	COUNTY	ROUTE	POST MILES TOTAL PROJECT	SHEET NO.	TOTAL SHEETS
03	Yub	70	R7.0/13.6	94	113

Randell D. Hiatt
REGISTERED CIVIL ENGINEER

June 6, 2008
PLANS APPROVAL DATE

REGISTERED PROFESSIONAL ENGINEER
Randell D. Hiatt
No. C50200
Exp. 6-30-09
CIVIL
STATE OF CALIFORNIA

The State of California or its officers or agents shall not be responsible for the accuracy or completeness of electronic copies of this plan sheet.

To accompany plans dated 7-26-10

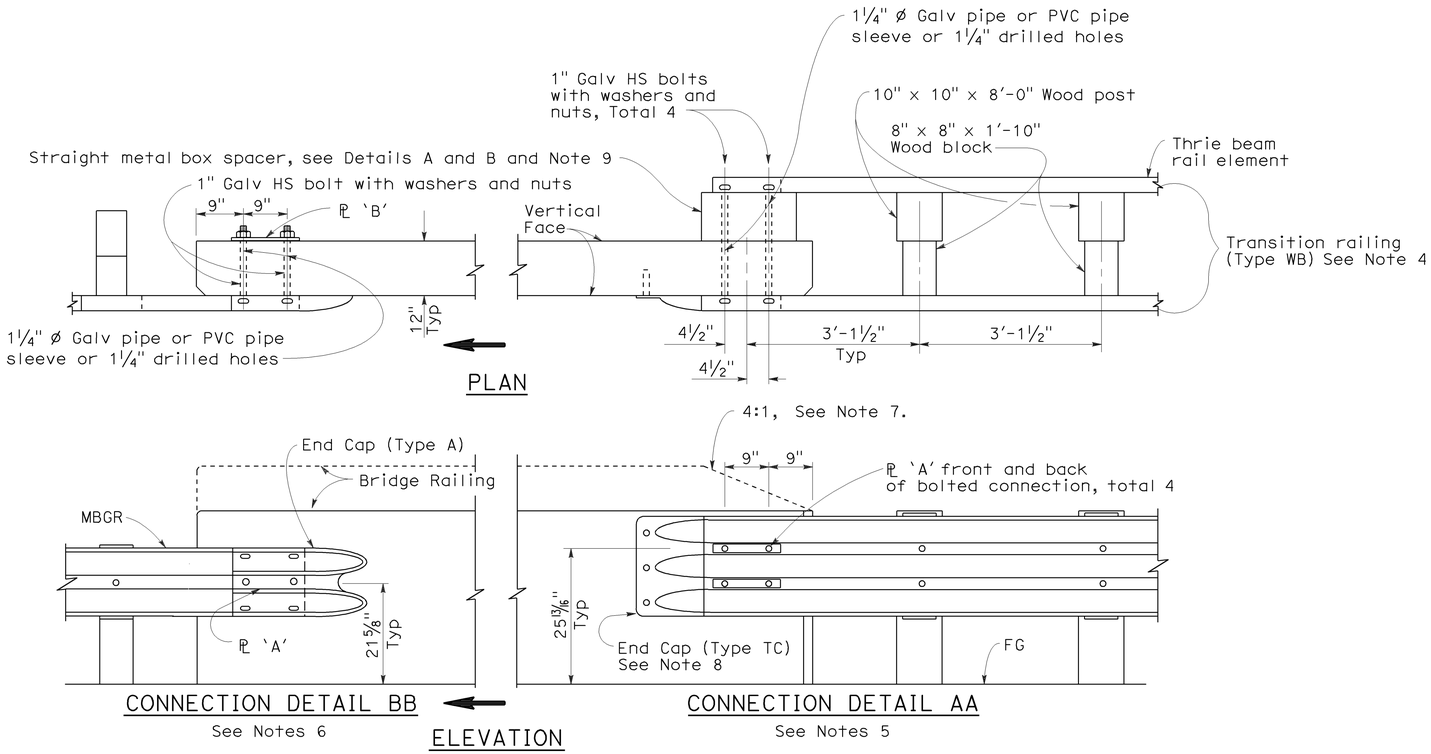

GUARD RAILING CONNECTION TO BRIDGE RAILING WITHOUT SIDEWALK

NOTES:

1. See Revised Standard Plan RSP A77J2 for additional connection details to bridges without sidewalks.
2. Additional details of posts, blocks and hardware are shown on Standard Plan A77B1, A77C1 and A77C2.
3. Direction of adjacent traffic indicated by ➡.
4. For additional details of Transition Railing (Type WB), see Standard Plan A77J4. Transition Railing (Type WB) transitions the 12 gage w-beam standard railing section of guard railing to a heavier gage nested thrie beam railing section which is connected to the concrete bridge railing.
5. For typical use of Connection Detail AA, see Layout Types 12A and 12B on Revised Standard Plan RSP A77F1, Layout Types 12C and 12D on Standard Plan A77F2, and Layout Type 12E on Revised Standard Plan RSP A77F3.
6. For typical use of Connection Detail BB, see Layout Type 12D (structure departure railing connection) on Standard Plan A77F2 and Layout Type 12DD on Standard Plan A77F5.
7. Where the height of the bridge railing exceeds the height of the thrie beam railing by more than 1" at Connection Detail AA, taper the top of the end of the bridge railing at 4:1 to match the top elevation of the thrie beam rail.
8. For details of End Cap (Type TC), see Standard Plan A77J4.
9. See Standard Plan A77J4 for additional details regarding depth dimension for straight metal box spacer.

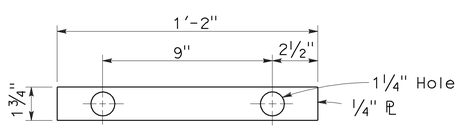

PLATE 'A'

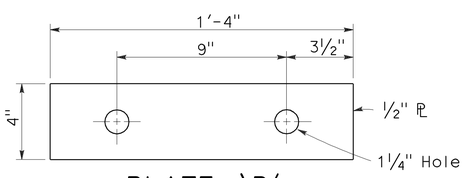

PLATE 'B'
(For backside of connection BB)

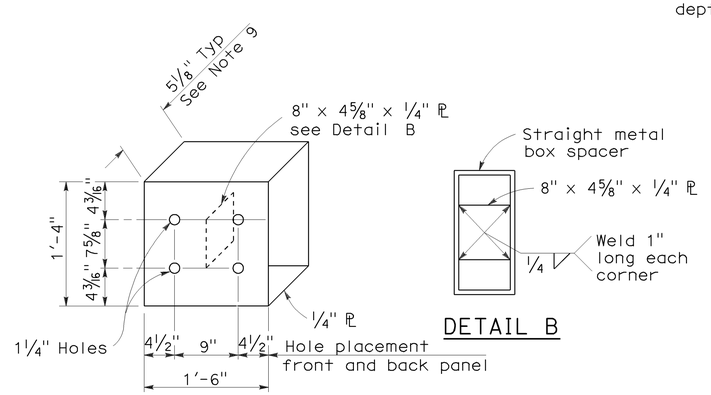

DETAIL B

DETAIL A

STRAIGHT METAL BOX SPACER

STATE OF CALIFORNIA
DEPARTMENT OF TRANSPORTATION

METAL BEAM GUARD RAILING CONNECTIONS TO BRIDGE RAILINGS WITHOUT SIDEWALKS DETAILS No.1

NO SCALE

RSP A77J1 DATED JUNE 6, 2008 SUPERSEDES STANDARD PLAN A77J1
DATED MAY 1, 2006 - PAGE 72 OF THE STANDARD PLANS BOOK DATED MAY 2006.

REVISED STANDARD PLAN RSP A77J1

2006 REVISED STANDARD PLAN RSP A77J1

12-10-07

DIST	COUNTY	ROUTE	POST MILES TOTAL PROJECT	SHEET NO.	TOTAL SHEETS
03	Yub	70	R7.0/13.6	95	113

Randell D. Hiatt
REGISTERED CIVIL ENGINEER

June 6, 2008
PLANS APPROVAL DATE

REGISTERED PROFESSIONAL ENGINEER Randell D. Hiatt No. C50200 Exp. 6-30-09 CIVIL STATE OF CALIFORNIA

The State of California or its officers or agents shall not be responsible for the accuracy or completeness of electronic copies of this plan sheet.

To accompany plans dated 7-26-10

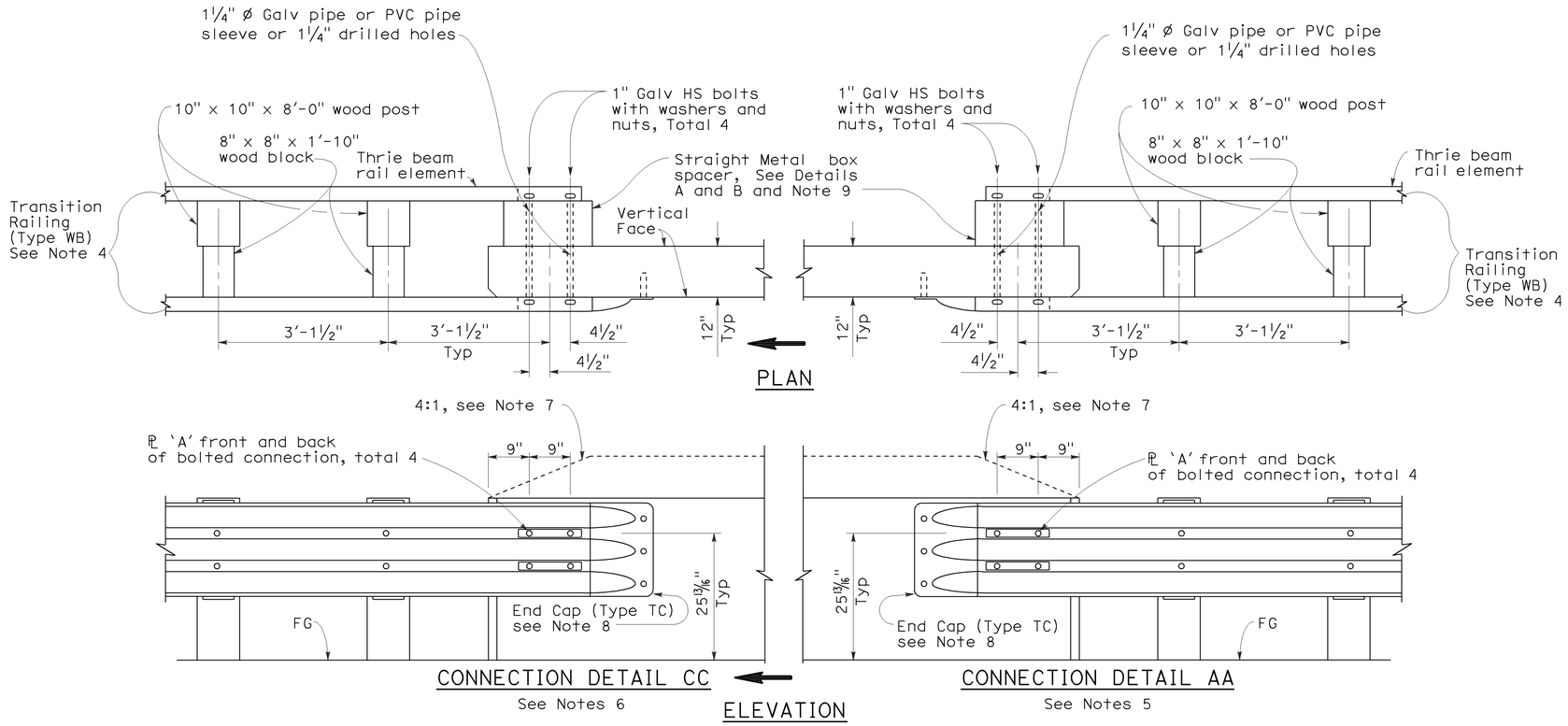

GUARD RAILING CONNECTION TO BRIDGE RAILING WITHOUT SIDEWALK

NOTES:

1. See Revised Standard Plan RSP A77J1 for additional connection details to bridges without sidewalks.
2. Additional details of posts, blocks and hardware are shown on Standard Plan A77B1, A77C1 and A77C2.
3. Direction of adjacent traffic indicated by ⟹.
4. For additional details of Transition Railing (Type WB), see Standard Plan A77J4. Transition Railing (Type WB) transitions the 12 gage w-beam standard railing section of guard railing to a heavier gage nested thrie beam railing section which is connected to the concrete bridge railing.
5. For typical use of Connection Detail AA, see Layout Types 12A and 12B on Revised Standard Plan RSP A77F1, Layout Types 12C and 12D on Standard Plan A77F2, and Layout Type 12E on Revised Standard Plan RSP A77F3.
6. For typical use of Connection Detail CC, see Layout Types 12AA and 12BB on Standard Plan A77F4 and Layout Type 12CC on Standard Plan A77F5.
7. Where the height of the bridge railing exceeds the height of the thrie beam railing by more than 1" at Connection Detail AA and connection Detail CC, taper the top of the end of the bridge railing at 4:1 to match the top elevation of the thrie beam railing.
8. For details of End Cap (Type TC), see Standard Plans A77J4.
9. See Standard Plans A77J4 for additional details regarding depth dimension for straight metal box spacer.

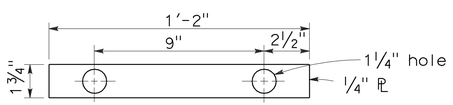

PLATE 'A'

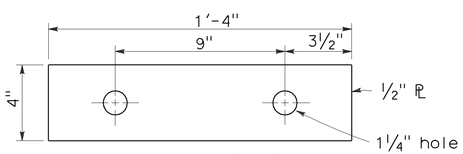

PLATE 'B'
(For backside of connection BB)

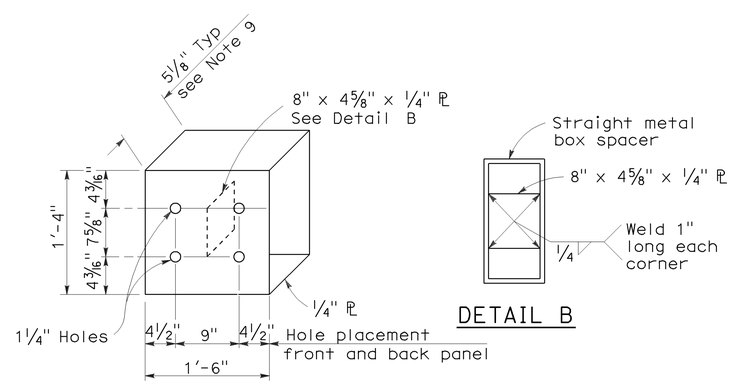

DETAIL A

DETAIL B

STRAIGHT METAL BOX SPACER

STATE OF CALIFORNIA
DEPARTMENT OF TRANSPORTATION

METAL BEAM GUARD RAILING CONNECTIONS TO BRIDGE RAILINGS WITHOUT SIDEWALKS DETAILS No.2

NO SCALE

RSP A77J2 DATED JUNE 6, 2008 SUPERSEDES STANDARD PLAN A77J2 DATED MAY 1, 2006 - PAGE 73 OF THE STANDARD PLANS BOOK DATED MAY 2006.

REVISED STANDARD PLAN RSP A77J2

2006 REVISED STANDARD PLAN RSP A77J2

12-10-07

DIST	COUNTY	ROUTE	POST MILES TOTAL PROJECT	SHEET NO.	TOTAL SHEETS
03	Yub	70	R7.0/13.6	96	113

Randell D. Hiatt
REGISTERED CIVIL ENGINEER

June 5, 2009
PLANS APPROVAL DATE

REGISTERED PROFESSIONAL ENGINEER Randell D. Hiatt No. C50200 Exp. 6-30-09 CIVIL STATE OF CALIFORNIA

The State of California or its officers or agents shall not be responsible for the accuracy or completeness of electronic copies of this plan sheet.

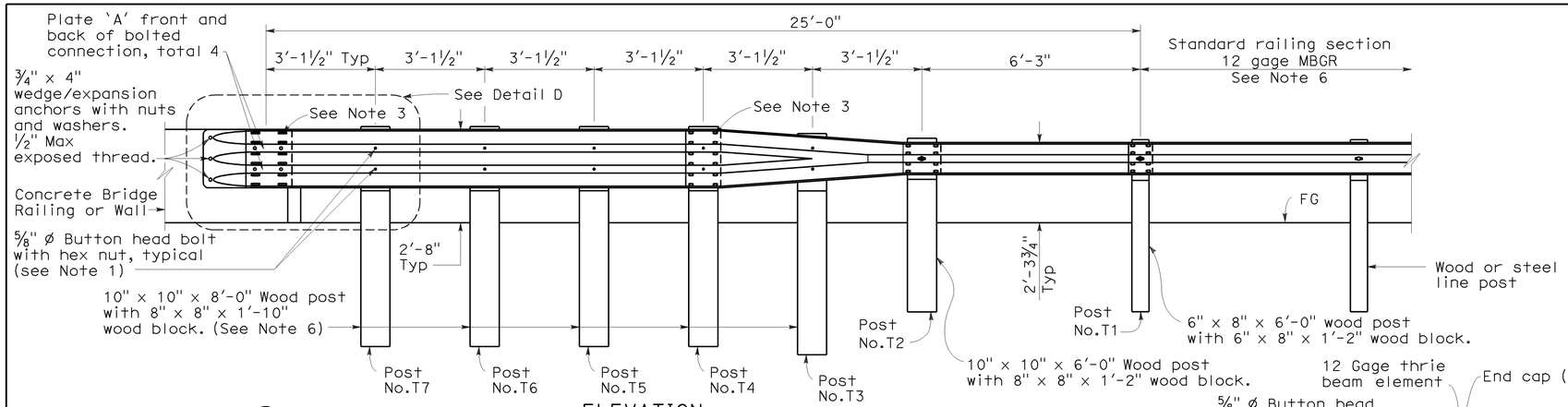

ELEVATION

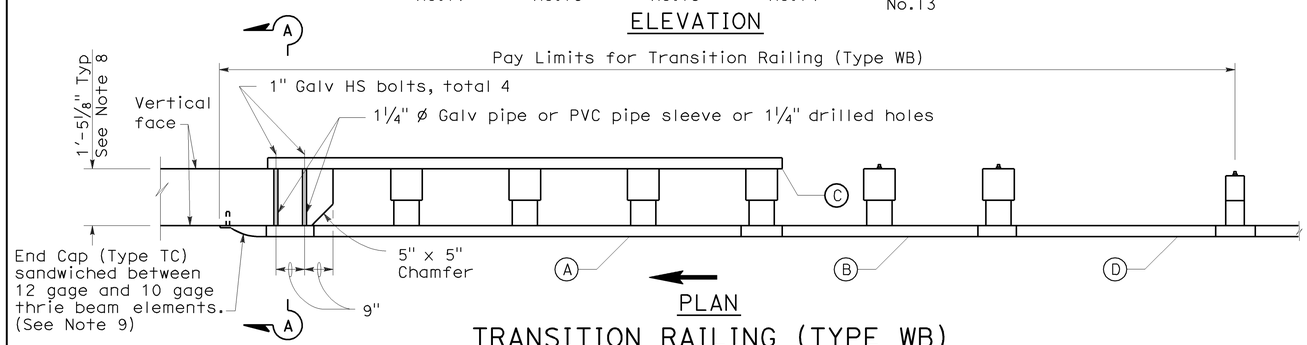

PLAN

TRANSITION RAILING (TYPE WB)

(No Blockout Attachment)

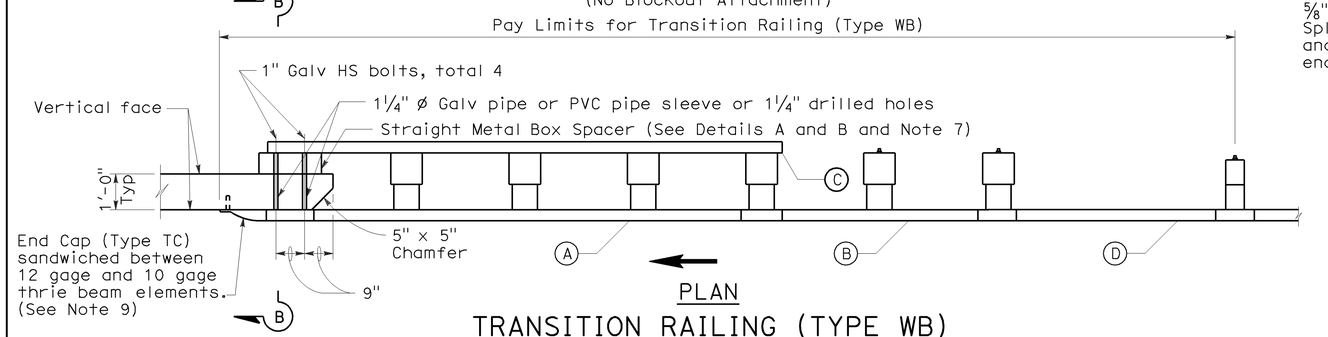

PLAN

TRANSITION RAILING (TYPE WB)

(Blockout Attachment)

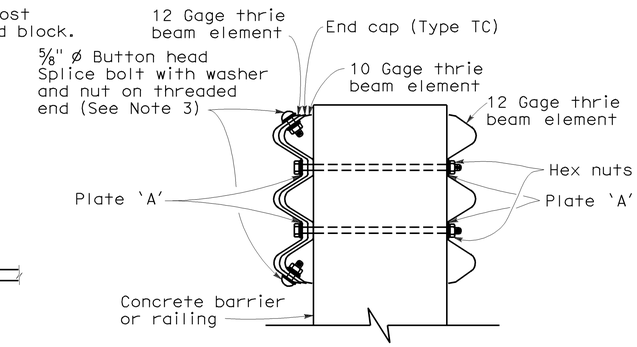

SECTION A-A

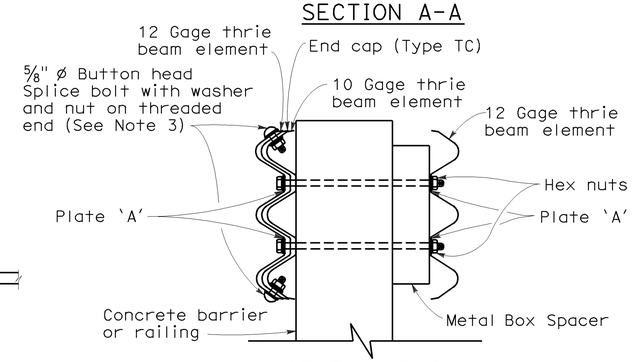

SECTION B-B

LEGEND

(A) Nested thrie beam elements (one 12 gage element nested over one 10 gage element).

(B) One 10 gage "W" beam to thrie beam element.

(C) One 12 gage thrie beam element.

(D) One 10 gage "W" beam rail element (7'-3½" length)

10 gage = 0.135" thick

12 gage = 0.108" thick

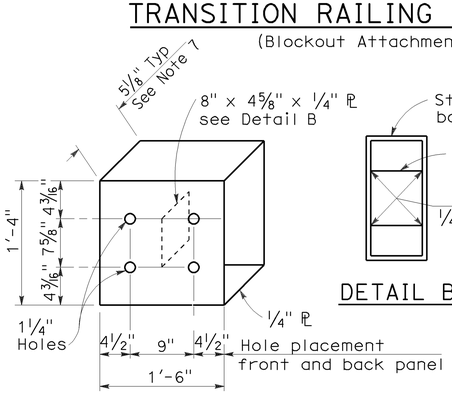

DETAIL A

STRAIGHT METAL BOX SPACER

DETAIL B

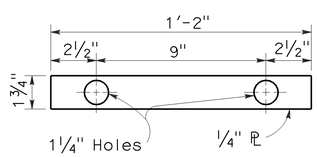

DETAIL C

PLATE 'A'

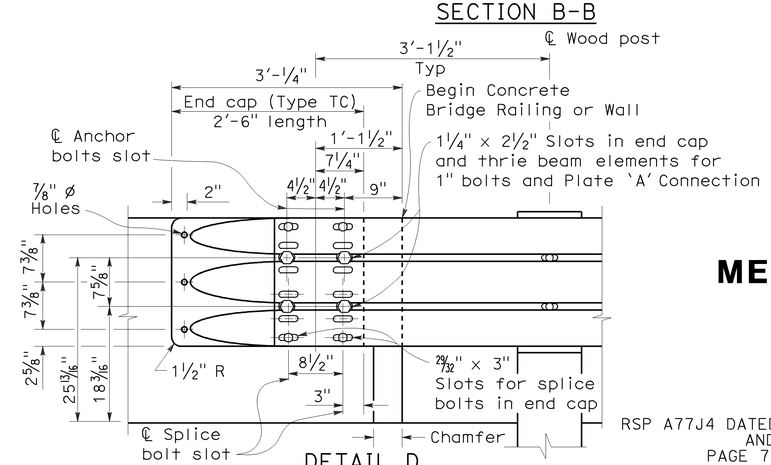

DETAIL D

NOTES:

To accompany plans dated 7-26-10

1. Use 5/8 " ø Button head bolts and hex nuts for connections to posts. No washer on rail face for bolted connections to post.
2. The nested rail elements, end cap, and 'W' beam to thrie beam element may be spliced together prior to bolting the elements to the wood post and concrete barrier or railing.
3. Exterior splice bolt holes for rail element splices at Post No.T4 and the connection to the concrete barrier or railing shall be the standard 29/32 " x 1 1/8 " slot size. Interior splice bolt holes at these locations may be increased up to 1 1/4 " ø. Only the top 2 and the bottom 2 splice bolts with washers and nuts are required for rail splices at Post No.T4 and the connection to the concrete barrier or railing.
4. Direction of adjacent traffic indicated by →.
5. The top elevation of Post Nos.T2 through T7 shall not project more than 1" above the top elevation of the rail element.
6. Typically, the railing connected to Transition Railing (Type WB) will be either standard railing section of metal beam guard railing or an approved Caltrans end treatment attached to Post No.T1.
7. The depth of the metal box spacer varies from the 5 1/8 " to 1 1/2 " and is dependent on the width of the concrete railing or wall. The combined dimension for the depth of the metal box spacer plus the width of railing or wall is typically 17 1/8 ". Where the space between the backside of the concrete railing or wall and the rear thrie beam element is less than 1 1/2 ", metal plates similar to Plate 'A' are to be used as spacers.
8. Where the width of the concrete railing or wall is greater than 17 1/8 ", wood blocks are to be used to fill the space created between the backside of Posts No.4 through No.7 and the rear thrie beam element. These wood blocks shall be 8" in width and 1'-2" in length. The dimension between the front thrie beam element and the rear thrie beam element is to match the width of the concrete railing or wall.
9. End cap may be installed over 12 gage and 10 gage thrie beam elements where transition railing is installed on the departure end of bridge railing.

STATE OF CALIFORNIA
DEPARTMENT OF TRANSPORTATION

METAL BEAM GUARD RAILING TRANSITION RAILING (TYPE WB)

NO SCALE

RSP A77J4 DATED JUNE 5, 2009 SUPERSEDES RSP A77J4 DATED JUNE 6, 2008 AND STANDARD PLAN A77J4 DATED MAY 1, 2006 - PAGE 75 OF THE STANDARD PLANS BOOK DATED MAY 2006.

REVISED STANDARD PLAN RSP A77J4

2006 REVISED STANDARD PLAN RSP A77J4

5-14-09

DIST	COUNTY	ROUTE	POST MILES TOTAL PROJECT	SHEET NO.	TOTAL SHEETS
03	Yub	70	R7.0/13.6	97	113

REGISTERED CIVIL ENGINEER

September 1, 2006
PLANS APPROVAL DATE

Hector David Cordova No. C41957 Exp. 3-31-08 CIVIL STATE OF CALIFORNIA REGISTERED PROFESSIONAL ENGINEER

The State of California or its officers or agents shall not be responsible for the accuracy or completeness of electronic copies of this plan sheet.

To accompany plans dated 7-26-10

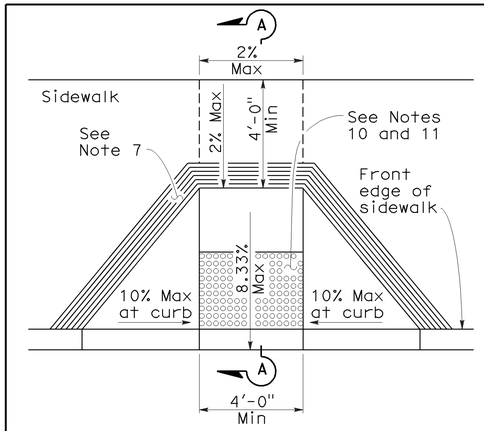

CASE A

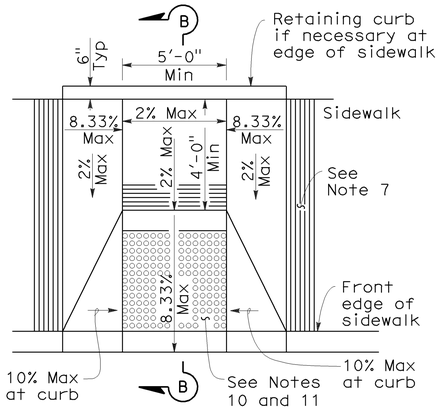

CASE B

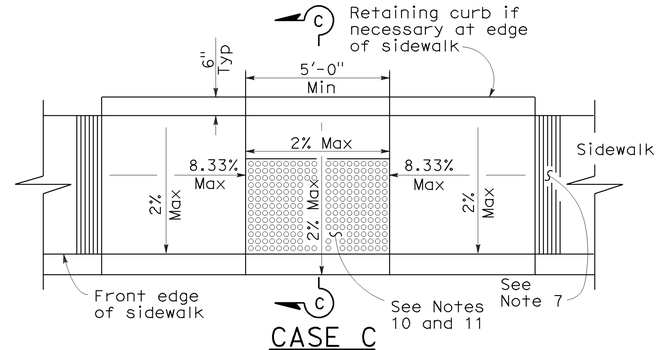

CASE C

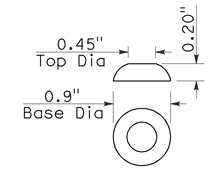

RAISED TRUNCATED DOME

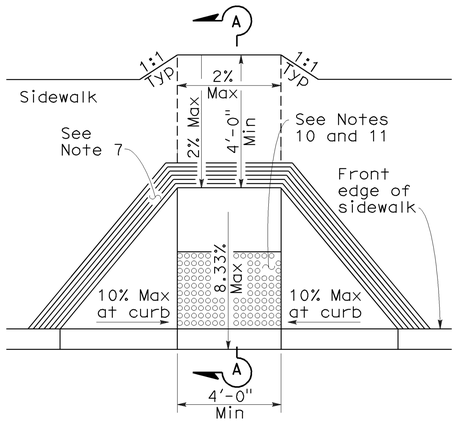

CASE D

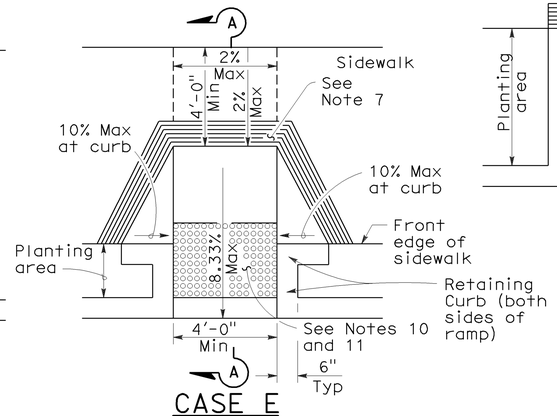

CASE E

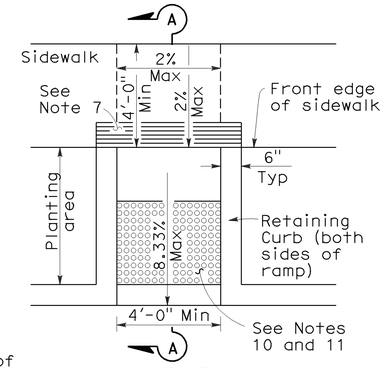

CASE F

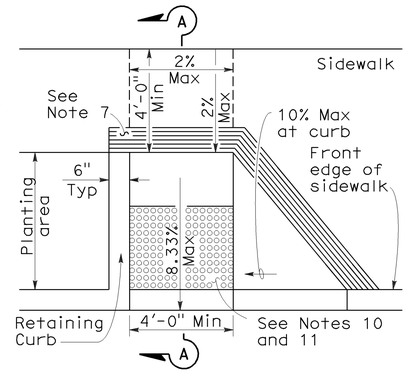

CASE G

See Note 4

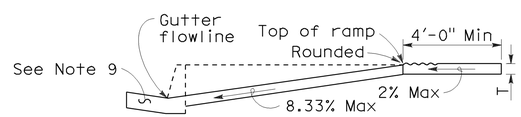

SECTION A-A

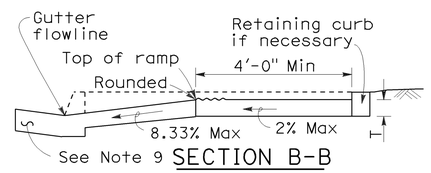

SECTION B-B

Depress entire sidewalk as required

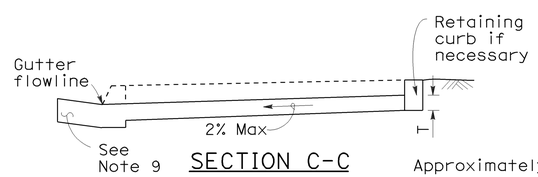

SECTION C-C

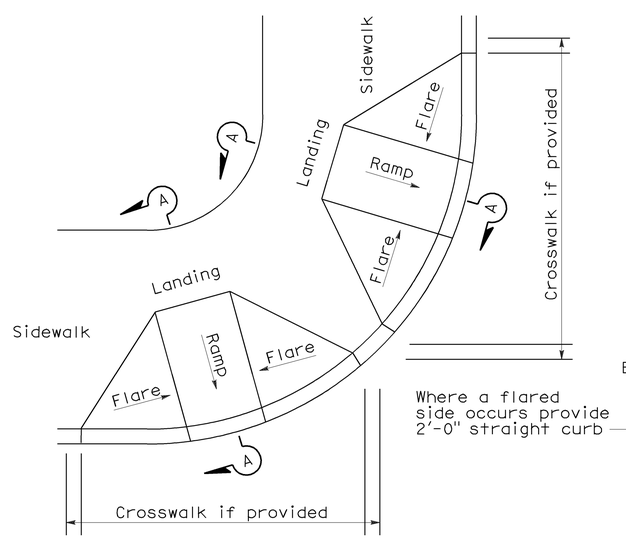

DETAIL A

TYPICAL TWO-RAMP CORNER INSTALLATION

See Note 1

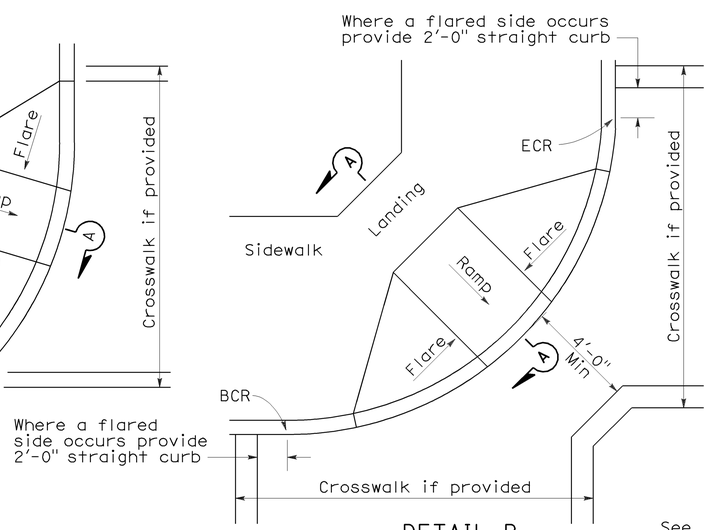

DETAIL B

TYPICAL ONE-RAMP CORNER INSTALLATION

See Notes 1 and 3

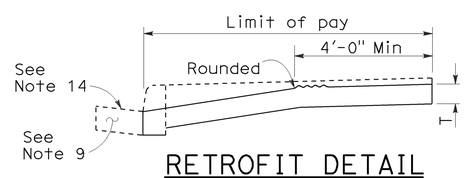

RETROFIT DETAIL

Existing curb and sidewalk

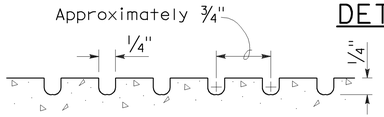

GROOVING DETAIL

NOTES:

1. As site conditions dictate, Case A through Case G curb ramps may be used for corner installations similar to those shown in Detail A and Detail B. The case of curb ramps used in Detail A do not have to be the same. Case A through Case G curb ramps also may be used at mid block locations, as site conditions dictate.
2. If distance from curb to back of sidewalk is too short to accommodate ramp and 4'-0" platform (landing) as shown in Case A, the sidewalk may be depressed longitudinally as in Case B, or C or may be widened as in Case D.
3. When ramp is located in center of curb return, crosswalk configuration must be similar to that shown for Detail B.
4. As site conditions dictate, the retaining curb side and the flared side of the Case G ramp shall be constructed in reversed position.
5. If located on a curve, the sides of the ramp need not be parallel, but the minimum width of the ramp shall be 4'-0".
6. Side slope of ramp flares vary uniformly from a maximum of 10% at curb to conform with longitudinal sidewalk slope adjacent to top of the ramp, except in Case C and Case F.
7. The curb ramp shall be outlined, as shown, with a 1'-0" wide border with 1/4" grooves approximately 3/4" on center. See grooving detail.
8. Transitions from ramps and landing to walks, gutters or streets shall be flush and free of abrupt changes.
9. Maximum slopes of adjoining gutters, the road surface immediately adjacent to the curb ramp or accessible route shall not exceed 5 percent within 4'-0" of the top and bottom of the curb ramp.
10. Curb ramps shall have a detectable warning surface that extends the full width and 3'-0" depth of the ramp. Detectable Warning Surfaces shall conform to the details on this plan and the requirements in the Special Provisions.
11. The edge of the detectable warning surface nearest the street shall be between 6" and 8" from the gutter flowline.
12. Sidewalk and ramp thickness, "T", shall be 3½" minimum.
13. Utility pull boxes, manholes, vaults and all other utility facilities within the boundaries of the curb ramp will be relocated or adjusted to grade by the owner prior to, or in conjunction with, curb ramp construction.
14. For retrofit conditions, removal and replacement of curb apron will be at the Contractor's option, unless otherwise shown on project plans.

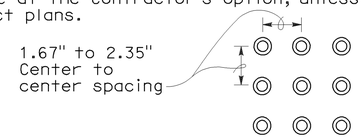

RAISED TRUNCATED DOME PATTERN (IN-LINE)

DETECTABLE WARNING SURFACE

See Note 10

STATE OF CALIFORNIA
DEPARTMENT OF TRANSPORTATION

CURB RAMP DETAILS

NO SCALE

RSP A88A DATED SEPTEMBER 1, 2006 SUPERSEDES STANDARD PLAN A88A DATED MAY 1, 2006 - PAGE 115 OF THE STANDARD PLANS BOOK DATED MAY 2006.

REVISED STANDARD PLAN RSP A88A

2006 REVISED STANDARD PLAN RSP A88A

8-3-06

DIST	COUNTY	ROUTE	POST MILES TOTAL PROJECT	SHEET NO.	TOTAL SHEETS
03	Yub	70	R7.0/13.6	98	113

Robert B Schott
LICENSED LANDSCAPE ARCHITECT

April 3, 2009
PLANS APPROVAL DATE

LICENSED LANDSCAPE ARCHITECT
Robert B. Schott 3695
Robert B Schott
Signature
11-30-10
Renewal Date
2-25-09
Date
STATE OF CALIFORNIA

The State of California or its officers or agents shall not be responsible for the accuracy or completeness of electronic copies of this plan sheet.

To accompany plans dated 7-26-10

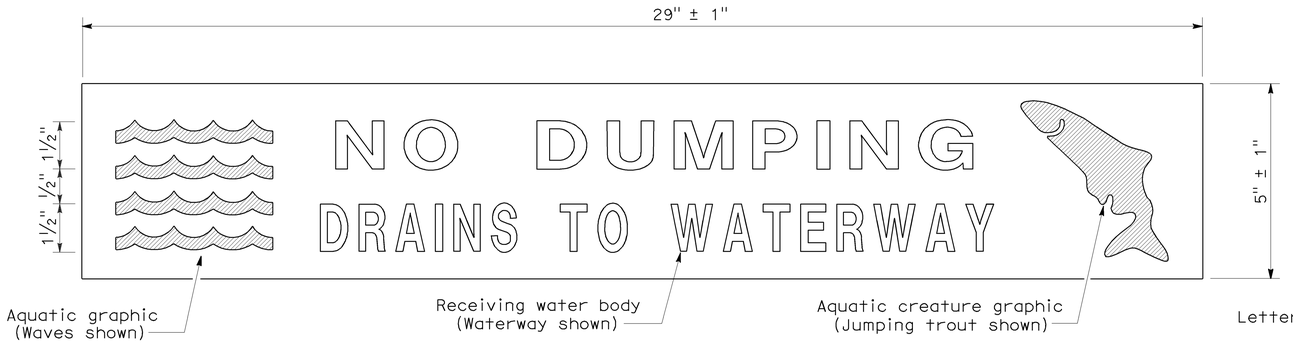

PLAN
DRAINAGE INLET MARKER
(PREFABRICATED THERMOPLASTIC)

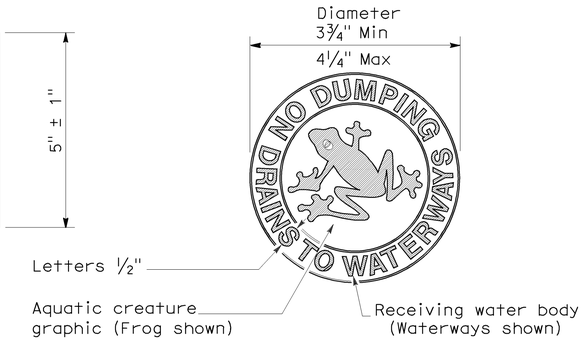

PLAN
DRAINAGE INLET MARKER
(MEDALLION)

PLAN
DRAINAGE INLET MARKER
(STAMPED CONCRETE IMPRINT)

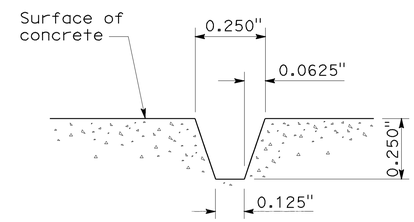

SECTION A-A
STAMPED CONCRETE
IMPRINT DETAIL

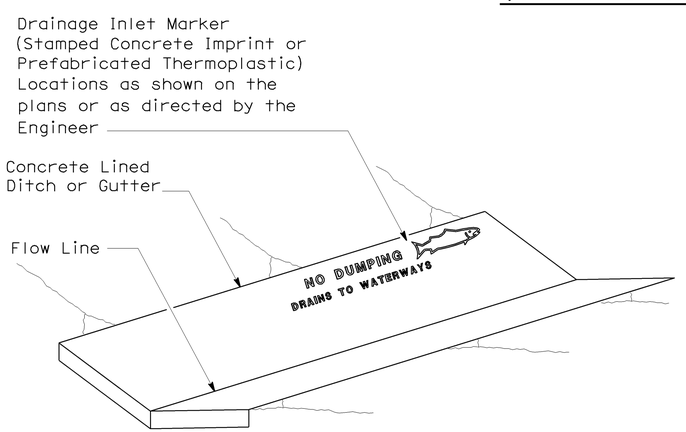

PERSPECTIVE
DRAINAGE INLET MARKER ON
CONCRETE LINED DITCH

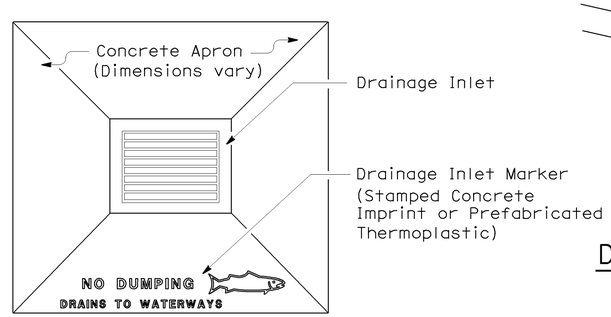

PLAN
DRAINAGE INLET MARKER ON
DRAINAGE INLET APRON

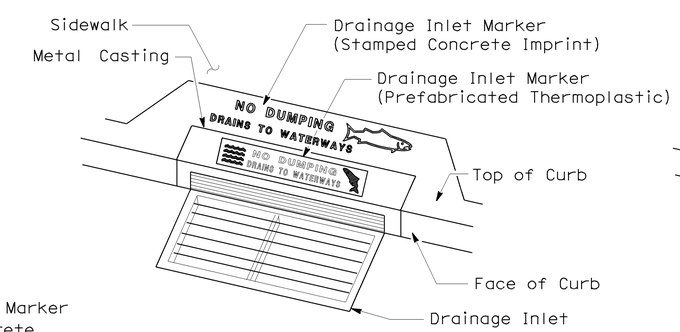

PERSPECTIVE
DRAINAGE INLET MARKER ON
DRAINAGE INLET

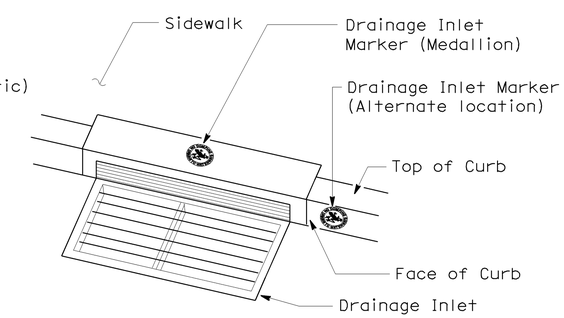

PERSPECTIVE
DRAINAGE INLET MARKER (MEDALLION)
ON DRAINAGE INLET

STATE OF CALIFORNIA
DEPARTMENT OF TRANSPORTATION

DRAINAGE INLET MARKERS

NO SCALE

NSP D71 DATED APRIL 3, 2009 SUPPLEMENTS
THE STANDARD PLANS BOOK DATED MAY 2006.

NEW STANDARD PLAN NSP D71

2006 NEW STANDARD PLAN NSP D71

7-24-08

DIST	COUNTY	ROUTE	POST MILES TOTAL PROJECT	SHEET NO.	TOTAL SHEETS
03	Yub	70	R7.0/13.6	99	113

Raymond Don Tsztoo
REGISTERED CIVIL ENGINEER

January 18, 2008
PLANS APPROVAL DATE

REGISTERED PROFESSIONAL ENGINEER Raymond Don Tsztoo No. C37332 Exp. 6-30-08 CIVIL STATE OF CALIFORNIA

The State of California or its officers or agents shall not be responsible for the accuracy or completeness of electronic copies of this plan sheet.

To accompany plans dated 7-26-10

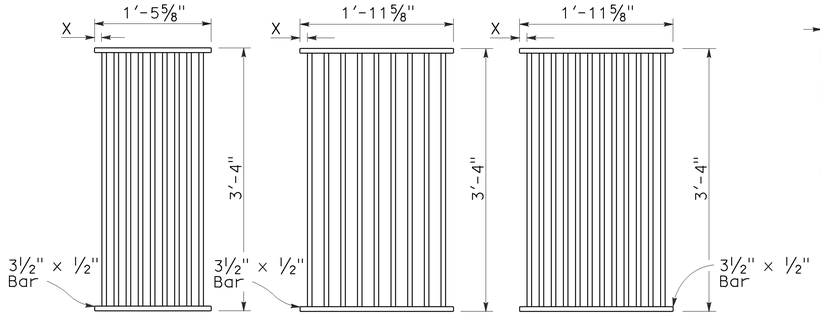

TYPE 18-9

1⅜" Clear spacing. Use within the roadbed on highways where bicycles and pedestrians are excluded.

TYPE 24-9

2" Clear spacing. Use in locations off the roadbed on all types of highways.

TYPE 24-12

1⅜" Clear spacing. Use within the roadbed on highways where bicycles and pedestrians are excluded.

RECTANGULAR GRATE DETAILS

(See table below)

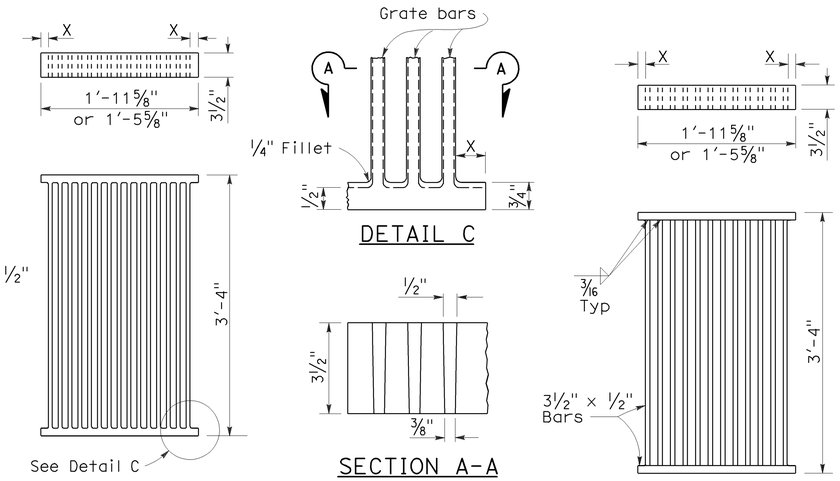

ALTERNATIVE CAST NODULAR IRON GRATE OR CAST STEEL GRATE

ALTERNATIVE WELDED GRATE

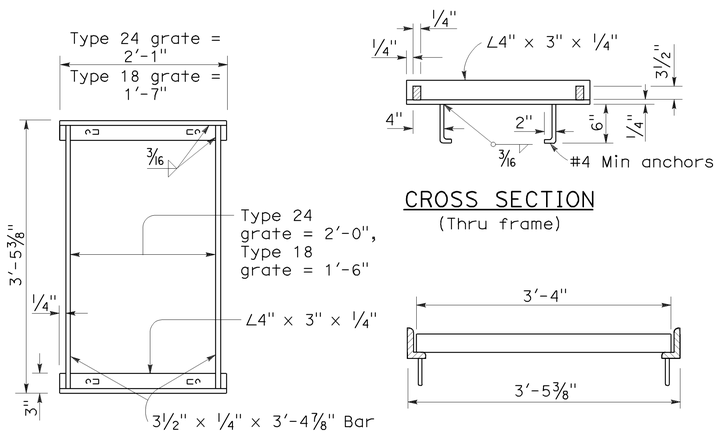

TYPICAL FRAME

CROSS SECTION
(Thru frame)

LONGITUDINAL SECTION
(Thru frame and grate)

RECTANGULAR FRAME DETAILS

(For all rectangular grates)

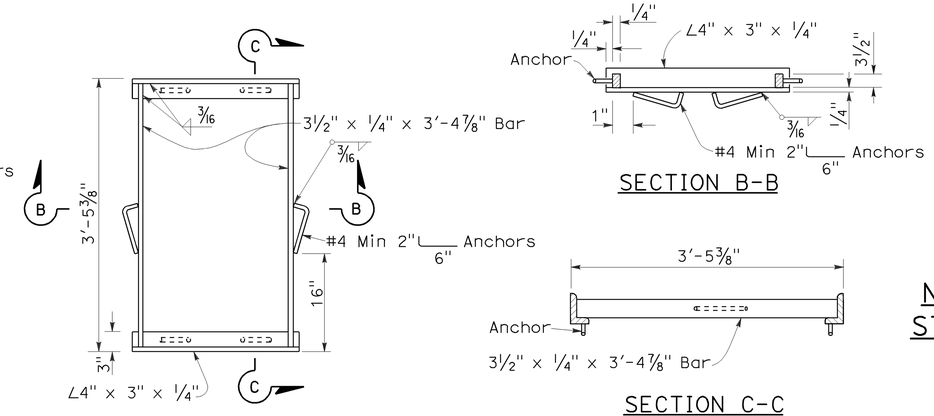

TYPICAL FRAME

SECTION B-B

SECTION C-C

ALTERNATIVE ANCHOR FOR RECTANGULAR FRAME

(For details not shown, See Rectangular Frame Details)

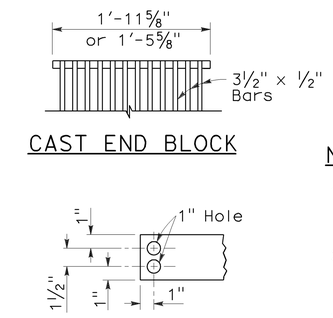

CAST END BLOCK

END OF BAR

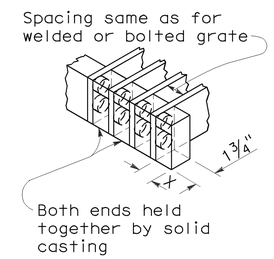

ALTERNATIVE CAST NODULAR IRON OR CAST STEEL END BLOCK GRATE

NOTES:

1. Grate type numbers refer to approximate width of grate in inches and number of bars, respectively.
2. Contractor has the option of using cast nodular iron, cast steel, welded, bolted, or cast end block grate.
3. See Special Provisions for requirements pertaining to galvanizing or asphalt dipping of grates and frames.
4. Rounded top of bars optional on all grates.
5. Pipe inlets with a grate shall be placed so that bars parallel direction of principle surface flow.
6. Full penetration butt welds may be substituted for the fillet welds on all anchors.
7. Standard square, hexagon, round or equivalent headed anchors may be substituted for the right angle hooks on the anchors shown on this plan.
8. Grate and frame weights are based on welded grates (weights of face angles, steps, protection bars, etc. are not included).

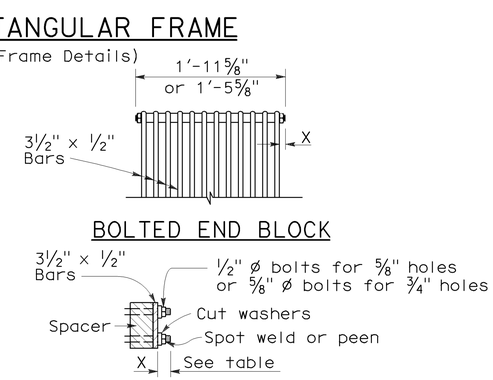

BOLTED END BLOCK

BOLTING DETAIL

ALTERNATIVE BOLTED GRATE

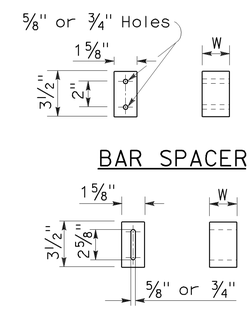

BAR SPACER

ALTERNATIVE SPACER
W = 1⅜" or 2"

GRATE BAR SPACING TABLE

TYPE	No. OF BARS	CLEAR BAR SPACING	X
18-9	9	1⅜"	1 1/16"
24-9	9	2"	1 9/16"
24-12	12	1⅜"	1¼"

INLET TYPE	COVER TYPE	WEIGHT LB
OS	PLATE	174
OL-7	PLATE	170
OL-10	PLATE	170
OL-14	PLATE	170
OL-21	PLATE	170
OCP	PLATE	112
OCPI	PLATE	112
OCPI	REDWOOD	42
OMP	PLATE	177
OMPI	PLATE	177

INLET TYPE	GRATE TYPE	No. OF GRATES	WEIGHT LB
GDO	24-12	2	634
GOL-7	24-12	1	326
GOL-10	24-12	1	326
GO,G1,G2,G3,G4 (TYPE 24)	24-9	1	263
	24-12	1	326
G4 (TYPE 18),G5,G6	18-9	1	249
GT1	18-9	2	498
GT2	18-9	2	498
GT3	24-12	2	652
GT4	24-12	2	652
TRASH RACK			22

BASIS FOR MISC IRON & STEEL FINAL PAY WEIGHTS FOR DRAINAGE INLETS

(See General Notes, No 8)

STATE OF CALIFORNIA
DEPARTMENT OF TRANSPORTATION

GRATE DETAILS

NO SCALE

RSP D77A DATED JANUARY 18, 2008 SUPERSEDES STANDARD PLAN D77A DATED MAY 1, 2006 - PAGE 155 OF THE STANDARD PLANS BOOK DATED MAY 2006.

REVISED STANDARD PLAN RSP D77A

2006 REVISED STANDARD PLAN RSP D77A

12-14-07

DIST	COUNTY	ROUTE	POST MILES TOTAL PROJECT	SHEET NO.	TOTAL SHEETS
03	Yub	70	R7.0/13.6	100	113

Raymond Don Tsztoo
REGISTERED CIVIL ENGINEER

June 6, 2008
PLANS APPROVAL DATE

REGISTERED PROFESSIONAL ENGINEER
Raymond Don Tsztoo
No. C37332
Exp. 6-30-08
CIVIL
STATE OF CALIFORNIA

The State of California or its officers or agents shall not be responsible for the accuracy or completeness of electronic copies of this plan sheet.

To accompany plans dated 7-26-10

ANNULAR AND HELICAL PROFILE

COUPLING TYPE	PIPE CORRUGATION	PIPE SIZE	W OR A	PIPE WALL THICKNESS		BAND THICKNESS		BAR AND STRAP (CSP ONLY)			ANGLE						
											DIMENSIONS		BOLTS (No.- Dia)		RIVETS ANGLE TO BAND		SPOT WELDS ANGLE TO BAND
				CSP	CAP	CSP	CAP	STRAP THICKNESS	BOLTS Dia	BAR Dia	CSP	CAP	CSP	CAP	CSP	CAP	CSP
TWO PIECE INTEGRAL FLANGE	1½′ × ¼"	6"	7"	0.064"-0.168"		0.052"							3-⅜"				
	1½′ × ¼"	8"-10"	7"	0.064"-0.168"	0.060"-0.164"	0.064"	0.060"						3-⅜"	3-⅜"			
ANNULAR	2⅔" × ½"	THROUGH 24"	12"	0.064"-0.168"	0.060"-0.164"	0.064"	0.060"				2" × 2" × 3/16"	2" × 2" × 3/16"	3-½"	3-½"	3-⅜"	3-⅜"	3-½"
HUGGER	2⅔" × ½" REROLLED END	THROUGH 24"	10½"	0.064"-0.168"		0.064"		0.079"	½"	⅞"							

SPIRAL RIB PROFILE

COUPLING TYPE	PIPE CORRUGATION	PIPE SIZE	W	PIPE WALL THICKNESS		BAND THICKNESS		BAR AND STRAP (SSRP ONLY)			ANGLE						
											DIMENSIONS		BOLTS (No.- Dia)		RIVETS ANGLE TO BAND		SPOT WELDS ANGLE TO BAND
				SSRP	ASRP	SSRP	ASRP	STRAP THICKNESS	BOLTS Dia	BAR Dia	SSRP	ASRP	SSRP	ASRP	SSRP	ASRP	SSRP
ANNULAR	2⅔" × ½" * REROLLED END	24"	12"	0.064"-0.168"	0.060"-0.164"	0.064"	0.060"				2" × 2" × 3/16"	2" × 2" × 3/16"	3-½"	3-½"	3-⅜"	3-⅜"	3-½"
HUGGER	2⅔" × ½" * REROLLED END	24"	10½"	0.064"-0.168"		0.064"		0.079"	½"	⅞"							

* See Note 12.

NOTES:

1. All ferrous metal coupling band connection hardware shall be galvanized or electro-plated in accordance with the Standard Specifications.
2. For helically corrugated coupling bands, the connection angles may be oriented parallel to the pipe axis, provided connecting holes are slotted lengthwise sufficiently to allow adjustment for the helix angle.
3. Tension strap may be connected to band with either spot welds or fillet welds that develop minimum required strength of strap.
4. Use 1¼" gage line dimension on attached angle leg for rivets and spot welds.
5. Band thickness shall not be less than:
   a. 3 standard thicknesses lighter than the thickness of the pipe for Corrugated Steel Pipe.
   b. 2 standard thicknesses lighter than the thickness of the pipe and in no case lighter than 0.060" for Corrugated Aluminum Pipe.
6. Dimensions, thicknesses and strengths shown are minimum.
7. For pipe arches use same width band as for round pipe of equal periphery.
8. Fillet welds of equivalent strenght may be substituted for spot welds or rivets.
9. Spot welds shall develop minimum required strength of strap.
10. Pipe with rerolled ends having at least two 2⅔" × ½" annular corrugations at each end with or without an upturned flange may be connected with any of the annular coupling bands shown for pipe of the same diameter and wall thickness and having 2⅔" × ½" corrugations.
11. For downdrain applications, two piece integral flange couplers shall have factory applied sleeve type rubber gaskets with a minimum length of 7" measured along the length of the pipe.
12. All profiles of Spiral Rib Pipe (¾" × ¾" ribs at 7½" pitch and ¾" × 1" ribs at 11½" pitch in both steel and aluminum and ¾" × 1" ribs at 8½" pitch in steel only) shall be manufactured with rerolled ends. Corrugation profile of the rerolled ends shall be 2⅔" × ½" annual corrugations with a minimum of two full corrugations at each end.

STATE OF CALIFORNIA
DEPARTMENT OF TRANSPORTATION

CORRUGATED METAL PIPE COUPLING DETAILS No. 7 DOWNDRAIN

NO SCALE

RSP D97G DATED JUNE 6, 2008 SUPERSEDES STANDARD PLAN D97G
DATED MAY 1, 2006 - PAGE 189 OF THE STANDARD PLANS BOOK DATED MAY 2006.

REVISED STANDARD PLAN RSP D97G

2006 REVISED STANDARD PLAN RSP D97G

4-4-08

DIST	COUNTY	ROUTE	POST MILES TOTAL PROJECT	SHEET NO.	TOTAL SHEETS
03	Yub	70	R7.0/13.6	101	113

Randell D. Hiatt
REGISTERED CIVIL ENGINEER

June 6, 2008
PLANS APPROVAL DATE

REGISTERED PROFESSIONAL ENGINEER
Randell D. Hiatt
No. C50200
Exp. 6-30-09
CIVIL
STATE OF CALIFORNIA

The State of California or its officers or agents shall not be responsible for the accuracy or completeness of electronic copies of this plan sheet.

To accompany plans dated 7-26-10

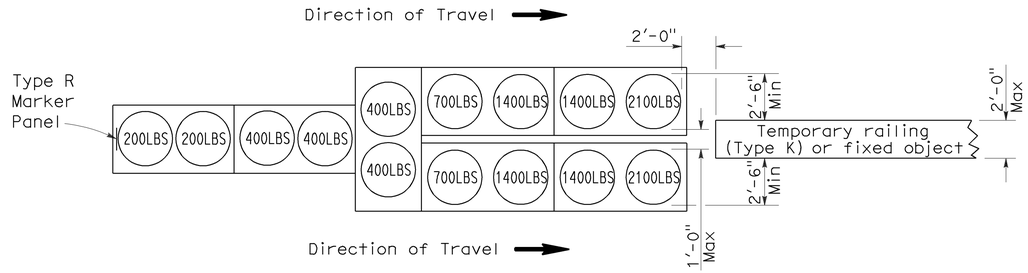

ARRAY 'TU14'

Approach speed 45 mph or more

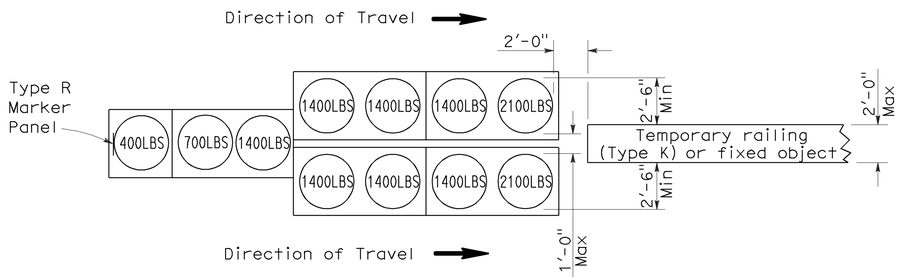

ARRAY 'TU11'

Approach speed less than 45 mph

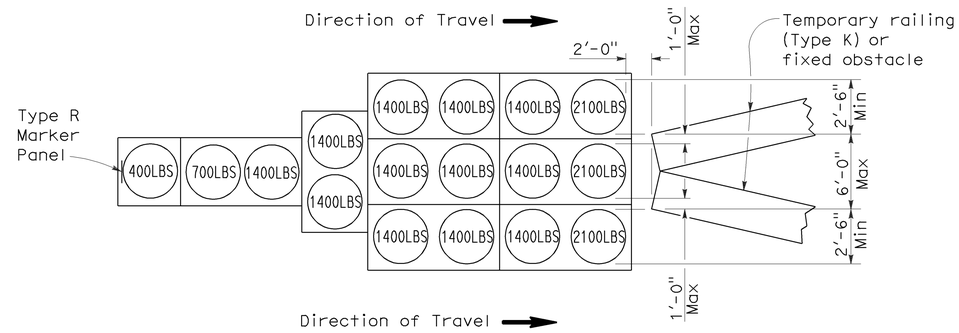

ARRAY 'TU17'

Approach speed less than 45 mph

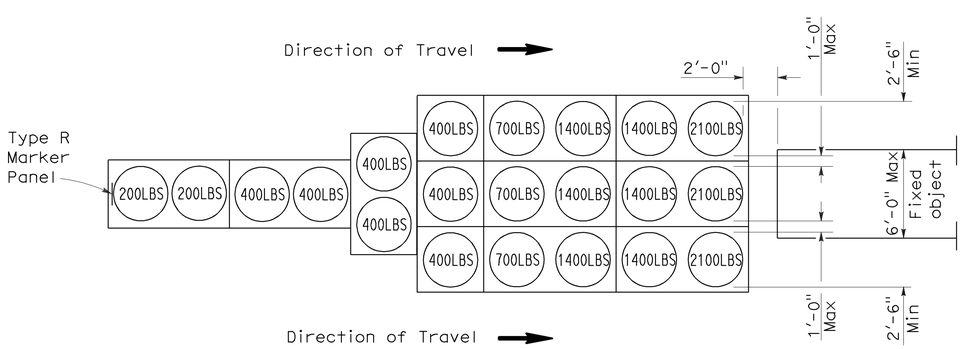

ARRAY 'TU21'

Approach speed 45 mph or more

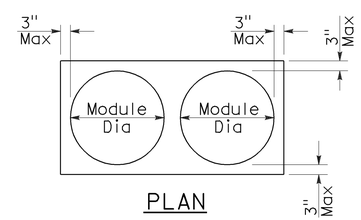

PLAN

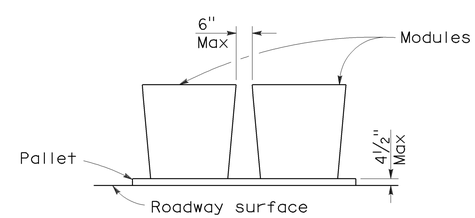

ELEVATION

CRASH CUSHION PALLET DETAIL

See Note 7

NOTES:

1. (XXX) Indicates sand filled module location and weight of sand in pounds for each module. Module spacing is based on the greater diameter of the module.
2. All sand weights are nominal.
3. Temporary crash cushion arrays shall not encroach on the traveled way.
4. Place the top of Type R marker panel 1" below the module lid.
5. Refer to Standard Plan A73B for marker details.
6. Approach speeds indicated conform to NCHRP 350 Report criteria.
7. Use of pallets is optional.

STATE OF CALIFORNIA
DEPARTMENT OF TRANSPORTATION

TEMPORARY CRASH CUSHION, SAND FILLED (UNIDIRECTIONAL)

NO SCALE

RSP T1A DATED JUNE 6, 2008 SUPERSEDES STANDARD PLAN T1A
DATED MAY 1, 2006 - PAGE 211 OF THE STANDARD PLANS BOOK DATED MAY 2006.

REVISED STANDARD PLAN RSP T1A

2006 REVISED STANDARD PLAN RSP T1A

DIST	COUNTY	ROUTE	POST MILES TOTAL PROJECT	SHEET NO.	TOTAL SHEETS
03	Yub	70	R7.0/13.6	102	113

Randell D. Hiatt
REGISTERED CIVIL ENGINEER

June 6, 2008
PLANS APPROVAL DATE

REGISTERED PROFESSIONAL ENGINEER
Randell D. Hiatt
No. C50200
Exp. 6-30-09
CIVIL
STATE OF CALIFORNIA

The State of California or its officers or agents shall not be responsible for the accuracy or completeness of electronic copies of this plan sheet.

To accompany plans dated 7-26-10

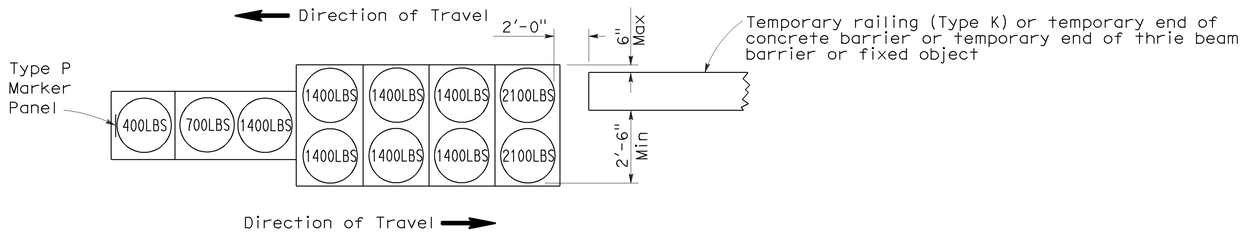

ARRAY 'TB11'

Approach speed less than 45 mph

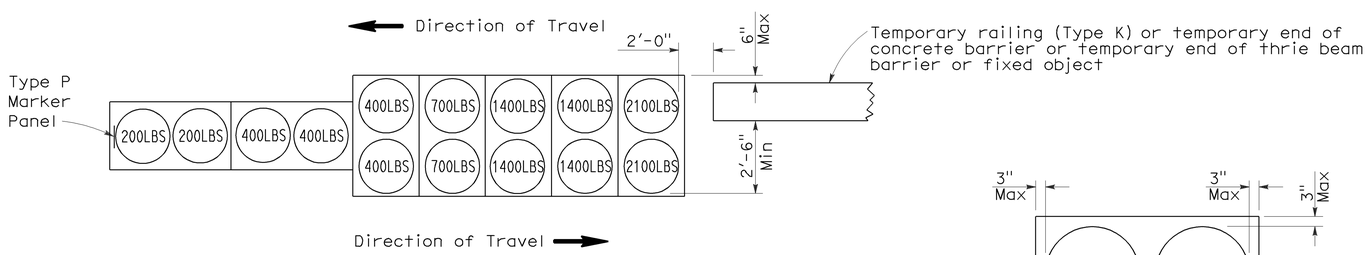

ARRAY 'TB14'

Approach speed 45 mph or more

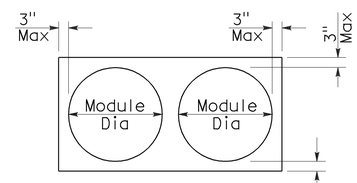

PLAN

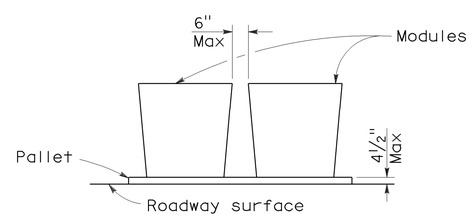

ELEVATION

CRASH CUSHION PALLET DETAIL

See Note 7

NOTES:

1. (XXX) Indicates sand filled module location and weight of sand in pounds for each module. Module spacing is based on the greater diameter of the module.
2. All sand weights are nominal.
3. Temporary crash cushion arrays shall not encroach on the traveled way.
4. Place the Type P marker panel so that the bottom of the panel rests upon the pallet.
5. Refer to Standard Plan A73B for marker details.
6. Approach speeds indicated conform to NCHRP 350 Report criteria.
7. Use of pallets is optional.

STATE OF CALIFORNIA
DEPARTMENT OF TRANSPORTATION

TEMPORARY CRASH CUSHION, SAND FILLED (BIDIRECTIONAL)

NO SCALE

RSP T1B DATED JUNE 6, 2008 SUPERSEDES STANDARD PLAN T1B
DATED MAY 1, 2006 - PAGE 212 OF THE STANDARD PLANS BOOK DATED MAY 2006.

REVISED STANDARD PLAN RSP T1B

2006 REVISED STANDARD PLAN RSP T1B

5-15-08

DIST	COUNTY	ROUTE	POST MILES TOTAL PROJECT	SHEET NO.	TOTAL SHEETS
03	Yub	70	R7.0/13.6	103	113

Randell D. Hiatt
REGISTERED CIVIL ENGINEER

June 6, 2008
PLANS APPROVAL DATE

REGISTERED PROFESSIONAL ENGINEER
Randell D. Hiatt
No. C50200
Exp. 6-30-09
CIVIL
STATE OF CALIFORNIA

The State of California or its officers or agents shall not be responsible for the accuracy or completeness of electronic copies of this plan sheet.

To accompany plans dated 7-26-10

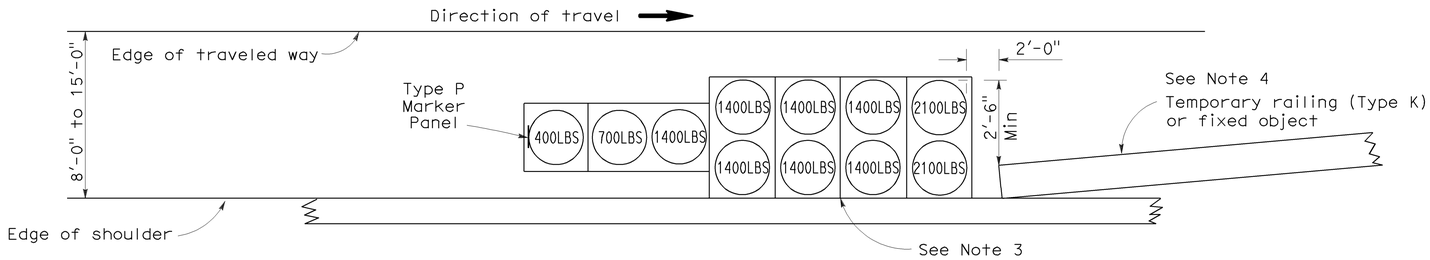

ARRAY 'TS11'

Approach speed less than 45 mph
See Note 9

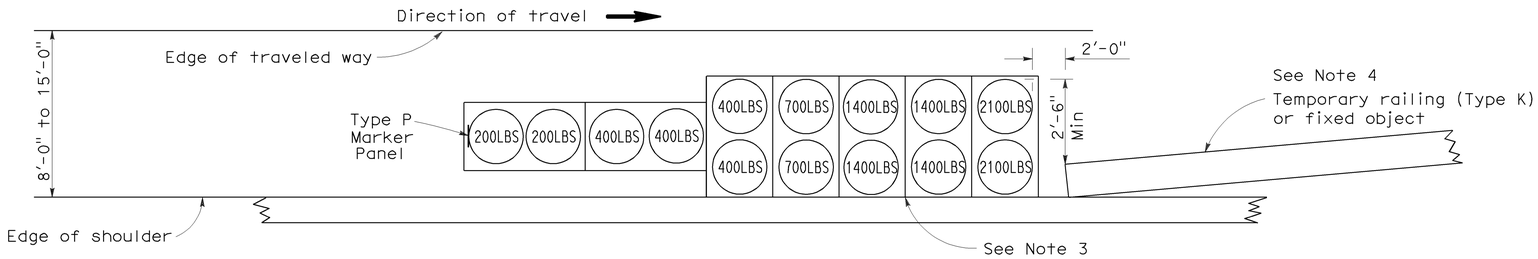

ARRAY 'TS14'

Approach speed 45 mph or more
See Note 9

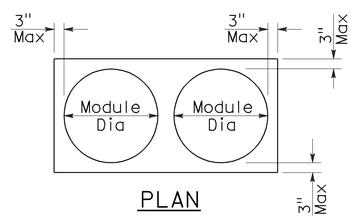

PLAN

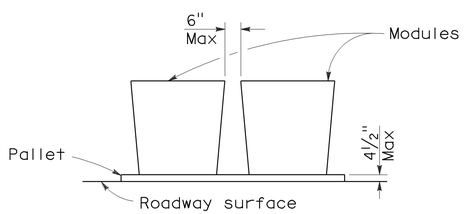

ELEVATION

CRASH CUSHION PALLET DETAIL

See Note 11

NOTES:

1. (XXX) Indicates sand filled module location and weight of sand in pounds for each module. Module spacing is based on the greater diameter of the module.
2. All sand weights are nominal.
3. The temporary crash cushion arrays shown on this plan shall be used only in locations where there will be traffic on one side of the temporary crash cushion array.
4. If the fixed object or approach end of the temporary railing is less than 15'-0" from the edge of traveled way, a temporary crash cushion is required in a construction or work zone.
5. Temporary crash cushion arrays shall not encroach on the traveled way.
6. Arrays for median shoulders shall conform to details shown on this plan for outside shoulders.
7. Place the Type P marker panel so that the bottom of the panel rests upon the pallet and faces traffic.
8. Refer to Standard Plan A73B for marker details.
9. For shoulder widths less than 8'-0", appropriate approved crash cushion protection, other than sand filled modules, shall be provided at fixed objects and at approach ends of temporary railing. The specific type of crash cushion shall be as shown on the project plans or as specified in the Special Provisions, or if not shown on the project plans or specified in the Special Provisions, shall be as approved by the Engineer.
10. Approach speeds indicated conform to NCHRP 350 Report criteria.
11. Use of pallets is optional.

STATE OF CALIFORNIA
DEPARTMENT OF TRANSPORTATION

TEMPORARY CRASH CUSHION, SAND FILLED (SHOULDER INSTALLATIONS)

NO SCALE

RSP T2 DATED JUNE 6, 2008 SUPERSEDES STANDARD PLAN T2
DATED MAY 1, 2006 - PAGE 213 OF THE STANDARD PLANS BOOK DATED MAY 2006.

REVISED STANDARD PLAN RSP T2

2006 REVISED STANDARD PLAN RSP T2

5-15-08

DIST	COUNTY	ROUTE	POST MILES TOTAL PROJECT	SHEET NO.	TOTAL SHEETS
03	Yub	70	R7.0/13.6	104	113

REGISTERED CIVIL ENGINEER

November 17, 2006
PLANS APPROVAL DATE

REGISTERED PROFESSIONAL ENGINEER — Greg W. Edwards — No. C36386 — Exp. 6-30-08 — CIVIL — STATE OF CALIFORNIA

The State of California or its officers or agents shall not be responsible for the accuracy or completeness of electronic copies of this plan sheet.

To accompany plans dated 7-26-10

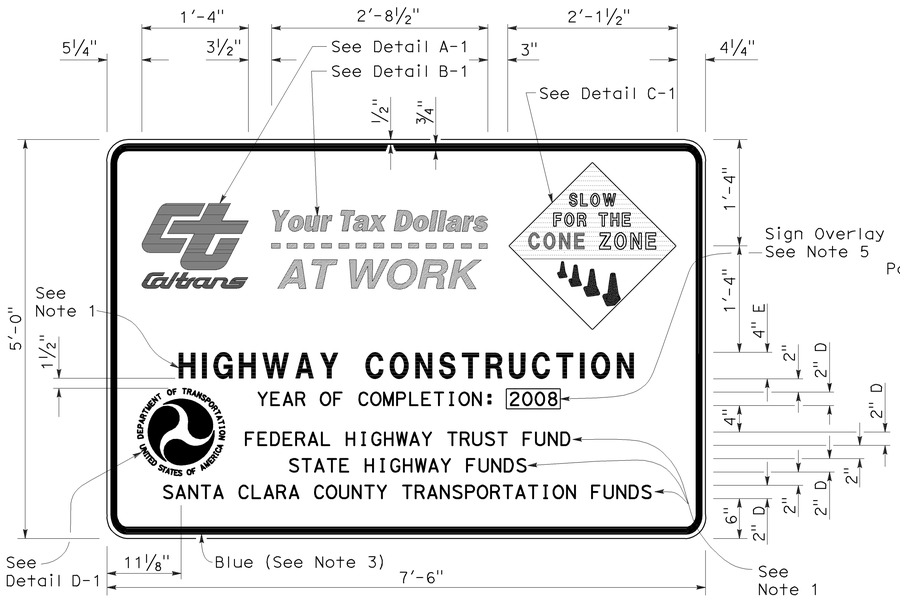

TYPE 1

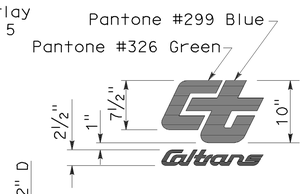

DETAIL A-1

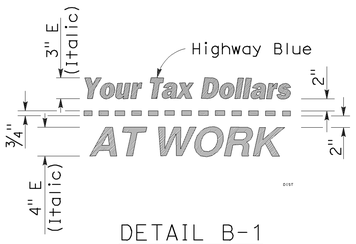

DETAIL B-1
(See Note 3)

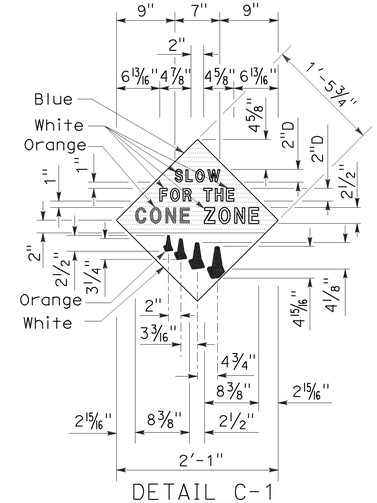

DETAIL C-1
(See Note 4)

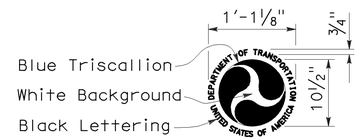

DETAIL D-1
(See Note 6)

NOTES:

1. The sign messages shown for type of project and fund types are examples only. See the Special Provisions for the applicable type of project and fund type messages to be used.
2. Except as otherwise shown, the legend of sign shall be black on a white background (non-reflective).
3. The border of the signs and details "B-1" and "B-2" shall be blue (non-reflective).
4. The diamond in details "C-1" and "C-2" shall be blue for the background of message, " SLOW FOR THE CONE ZONE", and white background for the orange cones. The color and type of font for the "SLOW FOR THE CONE ZONE" message shall be: "SLOW" white D; "FOR THE" white D; "CONE" orange Arial font; "ZONE" white Arial font.
5. Year of completion of project construction shown on the overlay is an example only. See the Special Provisions.
6. Use when the Project involves Federal Highway Trust Fund.

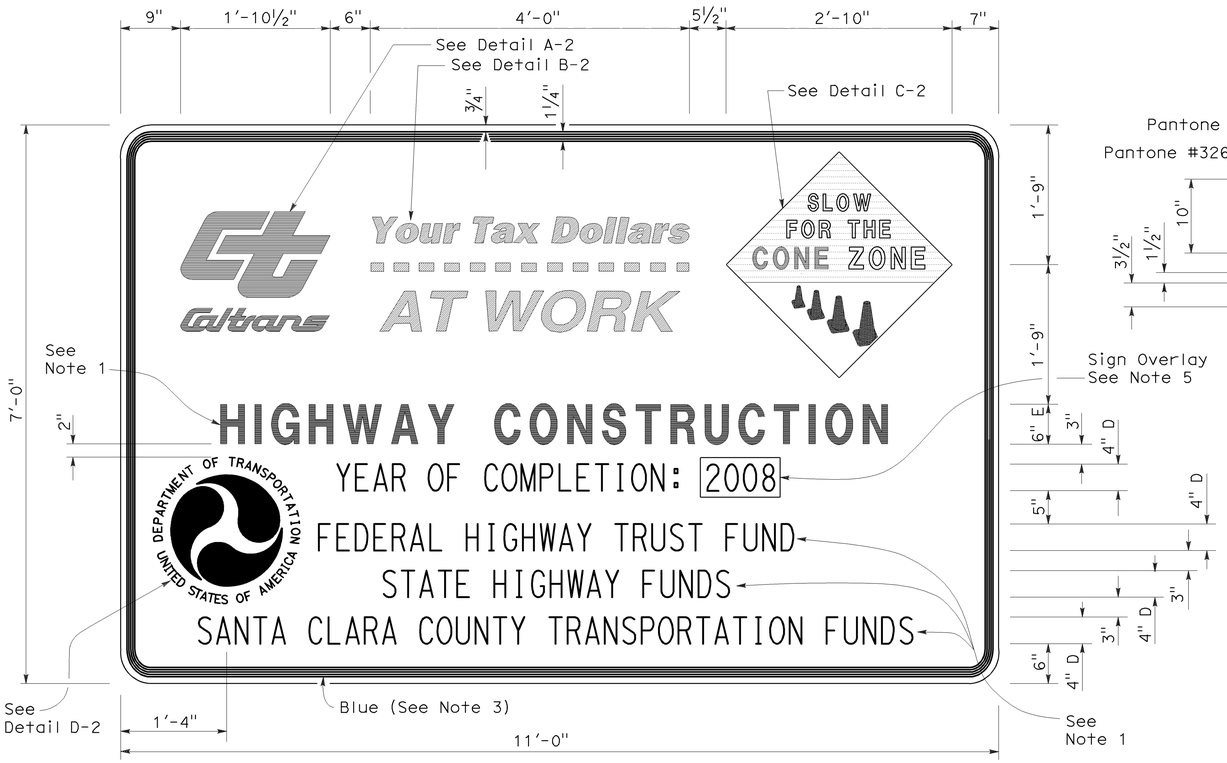

TYPE 2

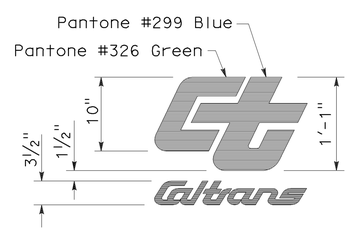

DETAIL A-2

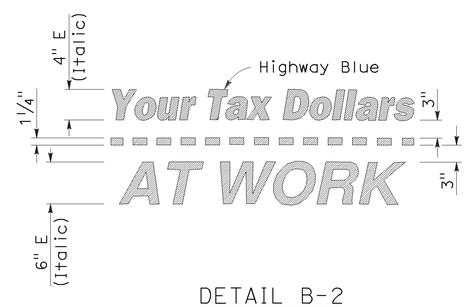

DETAIL B-2
(See Note 3)

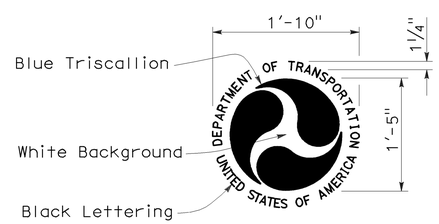

DETAIL D-2
(See Note 6)

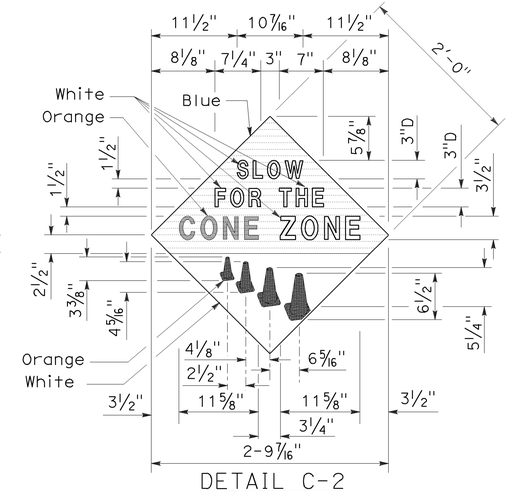

DETAIL C-2
(See Note 4)

STATE OF CALIFORNIA
DEPARTMENT OF TRANSPORTATION

CONSTRUCTION PROJECT FUNDING IDENTIFICATION SIGNS

NO SCALE

RSP T7 DATED NOVEMBER 17, 2006 SUPERSEDES STANDARD PLAN T7
DATED MAY 1, 2006 - PAGE 217 OF THE STANDARD PLANS BOOK DATED MAY 2006.

REVISED STANDARD PLAN RSP T7

2006 REVISED STANDARD PLAN RSP T7

9-7-06

DIST	COUNTY	ROUTE	POST MILES TOTAL PROJECT	SHEET NO.	TOTAL SHEETS
03	Yub	70	R7.0/13.6	105	113

LICENSED LANDSCAPE ARCHITECT

April 3, 2009
PLANS APPROVAL DATE

The State of California or its officers or agents shall not be responsible for the accuracy or completeness of electronic copies of this plan sheet.

LICENSED LANDSCAPE ARCHITECT — Robert B. Schott 3695 — Signature — 11-30-10 Renewal Date — 2-25-09 Date — STATE OF CALIFORNIA

To accompany plans dated 7-26-10

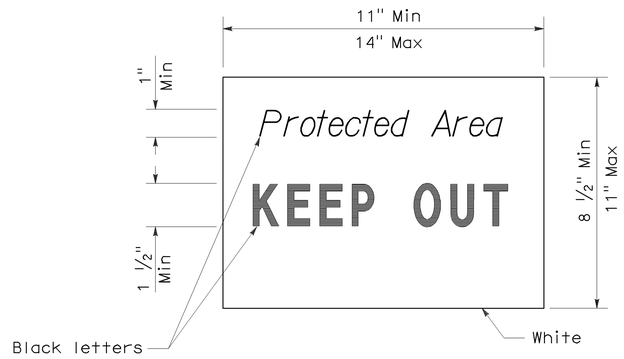

SIGN DETAIL

NOTE:

1. Temporary silt fence and temporary straw bale barrier shown for reference purposes only.

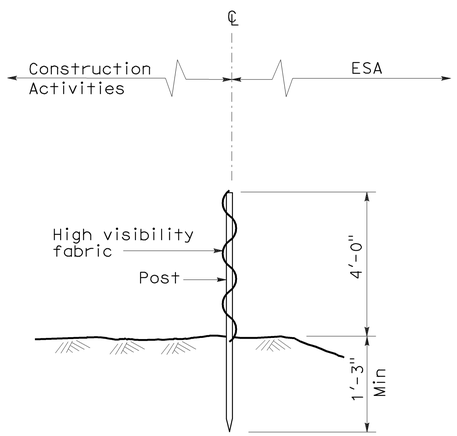

SECTION
TEMPORARY FENCE (TYPE ESA)

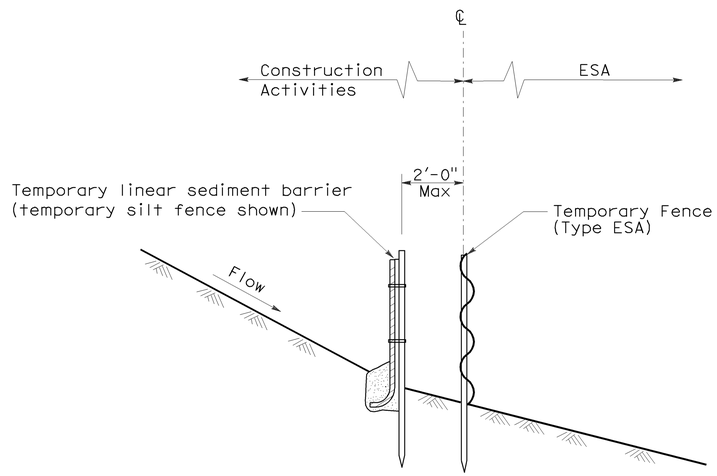

SECTION
PLACEMENT DETAIL
FOR TEMPORARY LINEAR SEDIMENT BARRIER
USED WITH TEMPORARY
FENCE (TYPE ESA)
(See Note 1)

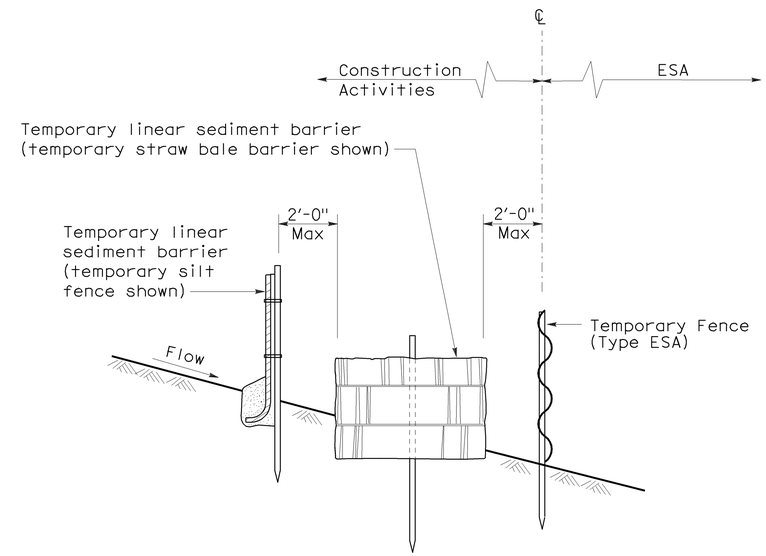

SECTION
PLACEMENT DETAIL
FOR TEMPORARY SILT FENCE
AND TEMPORARY STRAW BALE BARRIER
USED WITH TEMPORARY FENCE (TYPE ESA)
(See Note 1)

STATE OF CALIFORNIA
DEPARTMENT OF TRANSPORTATION

TEMPORARY WATER POLLUTION CONTROL DETAILS [TEMPORARY FENCE (TYPE ESA)]

NO SCALE

NSP T65 DATED APRIL 3, 2009 SUPPLEMENTS
THE STANDARD PLANS BOOK DATED MAY 2006.

NEW STANDARD PLAN NSP T65

2006 NEW STANDARD PLAN NSP T65

DIST	COUNTY	ROUTE	POST MILES TOTAL PROJECT	SHEET NO.	TOTAL SHEETS
03	Yub	70	R7.0/13.6	106	113

REGISTERED ELECTRICAL ENGINEER

October 5, 2007
PLANS APPROVAL DATE

REGISTERED PROFESSIONAL ENGINEER Jeffery G. McRae No. E14512 Exp. 6-30-08 ELECTRICAL STATE OF CALIFORNIA

The State of California or its officers or agents shall not be responsible for the accuracy or completeness of electronic copies of this plan sheet.

To accompany plans dated 7-26-10

ELECTROLIERS

STANDARD TYPES
15, 15D
15 STRUCTURE
21, 21D STRUCTURE
30
31
32
35
36-20A

High mast light pole

Double Arm lighting standard

Existing electrolier

Electrolier foundation (Future installation)

NOTES:

1. Luminaires shall be 310 W HPS when installed on Type 21, 21D, 30, 31, 32, 35 and 36-20A Standards, unless otherwise specified. Luminaires shall be 200 W HPS when installed on other type standards or poles, unless otherwise specified.
2. Luminaires shall be the cutoff type, ANSI Type Ⅲ medium cutoff lighting distribution, unless otherwise specified.
3. Variations noted adjacent to symbol on project plans.

Electrolier (see project notes or project plans)

Luminaire on wood pole

STANDARD NOTES:

- AB — Abandon. If applied to conduit, remove conductors.
- BC — Install pull box in existing conduit run.
- BP — Pedestrian barricade, type as indicated on plan.
- CB — Install conduit into existing pull box.
- CC — Connect new and existing conduit. Remove existing conductors and install conductors as indicated.
- CF — Conduit to remain for future use. Remove conductors. Install pull wire or rope.
- DH — Detector handhole.
- FA — Foundation to be abandoned.
- IS — Install sign on signal mast arm.
- NS — No slip base on standard.
- PEC — Photoelectric control.
- PEU — Photoelectric unit.
- RC — Equipment or material to be removed and become the property of the Contractor.
- RE — Remove electrolier, fuses and ballast. Tape ends of conductors.
- RL — Relocate equipment.
- RR — Remove and reuse equipment.
- RS — Remove and salvage equipment.
- SC — Splice new to existing conductors.
- SD — Service disconnect.
- SF — Standard to remain for future use. Remove luminaire, pole conductors, fuses and ballast.
- TSP — Telephone service point.

ABBREVIATIONS AND EQUIPMENT DESIGNATIONS

PROPOSED	EXISTING	
BBS	bbs	Battery backup system
BC	bc	Bolt circle
C	C	Conduit
CCTV	cctv	Closed circuit television
CKT	ckt	Circuit
CMS	cms	Changeable message sign
DLC	dlc	Loop detector lead-in cable
EMS	ems	Extinguishable message sign
EVC	evc	Emergency vehicle cable
EVD	evd	Emergency vehicle detector
FB	fb	Flashing beacon
FBCA	fbca	Flashing beacon control assembly
FBS	fbs	Flashing beacon with slip base
FO	fo	Fiber optic
G	G	Ground (Equipment Grounding Conductor)
GFCI	GFCI	Ground fault circuit interrupt
HAR	har	Highway advisory radio
HEX	hex	Hexagonal
HPS	hps	High pressure sodium
IISNS	iisns	Internally illuminated street name sign
ISL	isl	Induction sign lighting
LED	led	Light emitting diode
LMA	lma	Luminaire mast arm
LPS	lps	Low pressure sodium
LTG	ltg	Lighting
LUM	lum	Luminaire
MAT	mat	Mast arm mounting vehicle signal faces, top attachment
MAS	mas	Mast arm mounting vehicle signal faces, side attachment
MAS-4A	mas-4A	Mast arm mounting vehicle signal faces, side attachment - 4 signal section
MAS-4B	mas-4B	
MAS-4C	mas-4C	
MAS-5A	mas-5A	Mast arm mounting vehicle signal faces, side attachment - 5 signal section
MAS-5B	mas-5B	
MC	mc	Mercury contactor
M/M	m/m	Multiple to multiple transformer
MT	mt	Conduit with pull wire or rope only
MTG	mtg	Mounting
	mv	Mercury vapor lighting fixture
N	N	Neutral (Grounded Conductor)
NC	NC	Normally closed
NO	NO	Normally open
PB	pb	Pull box
PEC	pec	Photoelectric control (Type Ⅰ, Ⅱ, Ⅲ, Ⅳ or Ⅴ as shown)
PED	ped	Pedestrian
PEU	peu	Photoelectric unit
PPB	ppb	Pedestrian push button
RL		Relocated equipment
RM	rm	Ramp metering
SB	sb	Slip base
SIC	sic	Signal interconnect cable
SIG	sig	Signal
SMA	sma	Signal mast arm
SNS	sns	Street name sign
SP	sp	Service point
TDC	tdc	Telephone demarcation cabinet
TMS	tms	Traffic monitoring station
TOS	tos	Traffic Operations System
VEH	veh	Vehicle
XFMR	xfmr	Transformer
COMM	comm	Communication
RWIS	rwis	Roadway weather information system

SOFFIT AND WALL MOUNTED LUMINAIRES

Pendant, 70 W HPS unless otherwise specified.

Flush, 70 W HPS unless otherwise specified.

Wall surface, 70 W HPS unless otherwise specified.

Existing soffit or wall luminaire to remain unmodified.

Existing soffit or wall luminaire to be modified as specified.

NOTE:

Arrow indicates "street side" of luminaire.

STATE OF CALIFORNIA
DEPARTMENT OF TRANSPORTATION

ELECTRICAL SYSTEMS (SYMBOLS AND ABBREVIATIONS)

NO SCALE

RSP ES-1A DATED OCTOBER 5, 2007 SUPERSEDES STANDARD PLAN ES-1A DATED MAY 1, 2006 - PAGE 400 OF THE STANDARD PLANS BOOK DATED MAY 2006.

REVISED STANDARD PLAN RSP ES-1A

2006 REVISED STANDARD PLAN RSP ES-1A

DIST	COUNTY	ROUTE	POST MILES TOTAL PROJECT	SHEET NO.	TOTAL SHEETS
03	Yub	70	R7.0/13.6	107	113

REGISTERED ELECTRICAL ENGINEER

October 5, 2007
PLANS APPROVAL DATE

REGISTERED PROFESSIONAL ENGINEER Jeffery G. McRae No. E14512 Exp. 6-30-08 ELECTRICAL STATE OF CALIFORNIA

The State of California or its officers or agents shall not be responsible for the accuracy or completeness of electronic copies of this plan sheet.

To accompany plans dated 7-26-10

CONDUIT

PROPOSED	EXISTING	
		Lighting Conduit, unless otherwise indicated or noted
		Traffic signal conduit
C	c	Communication conduit
T	t	Telephone conduit
F	f	Fire alarm conduit
FO	fo	Fiber optic conduit
		Conduit termination (RSP ES-9A C)
R	r	Conduit riser in/on structure or service pole

SERVICE EQUIPMENT

PROPOSED	EXISTING	
OH	oh	Overhead lines
U	U	Wood pole "U" indicates utility owned
		Pole guy with anchor
		Utility transformer - ground mounted
III		Service equipment enclosure type
		Service equipment enclosure door indicates front of enclosure
T	t	Telephone demarcation cabinet

POLE-MOUNTED SERVICE DESIGNATION

Type of installation

TYPE H SERVICE - 28'-10" ← Pole height above grade

ILLUMINATED OVERHEAD SIGN

PROPOSED	EXISTING	
		Overhead sign - Single post
		Overhead sign - Two post
		Overhead sign - Mounted on structure
		Overhead sign with electrolier

SIGNAL EQUIPMENT

PROPOSED	EXISTING	
		Pedestrian signal face
		Pedestrian push button post
		Pedestrian barricade
		Vehicle signal face (with backplate, 3-Section: red, yellow and green)
		Vehicle signal face with angle visors
PV	PV	Modifications of basic symbols: "L" Indicates all non-arrow sections louvered "LG" Indicates louvered green section only "PV" indicates 12" programmed visibility sections "8" indicates all 8" sections (only when specified)
		Type 15TS and Vehicle signal face
		Vehicle signal face with red, yellow and green left arrow sections
		Vehicle signal face with red and yellow sections and up green arrow
		Vehicle signal face (5 Section) with red, yellow and green sections and yellow and green right arrows
		Type 1 Standard and attached vehicle signal faces
		Standard with signal mast arm only and attached vehicle signal faces and internally illuminated street name sign
		Type 33 Standard, Left-turn vehicle signal face and sign
		Standard with luminaire and signal mast arms and attached vehicle signal faces
		Cantilever flashing beacon Type 9 Frame, with a sign unless otherwise specified or indicated
		Type 15-FBS Standard with two vehicle signal face sections with lens, backplate and visor with a sign
R	Y	Flashing beacon. One vehicle signal face section with lens, backplate and visor. "R" indicates red indication, "Y" indicates yellow indication
		Controller assembly. Door indicates front of cabinet

SIGNAL EQUIPMENT Cont

PROPOSED	EXISTING	
		Guard post
		Type 1 Standard with "Meter On" sign
		Emergency Vehicle detector

NOTES:

1. All signal sections shall be 12" unless shown otherwise.
2. Signal heads shall be provided with backplates unless shown otherwise.
3. Signal indication shall be LED.

STATE OF CALIFORNIA
DEPARTMENT OF TRANSPORTATION

ELECTRICAL SYSTEMS (SYMBOLS AND ABBREVIATIONS)

NO SCALE

RSP ES-1B DATED OCTOBER 5, 2007 SUPERCEDES STANDARD PLAN ES-1B DATED MAY 1, 2006 - PAGE 401 OF THE STANDARD PLANS BOOK DATED MAY 2006.

REVISED STANDARD PLAN RSP ES-1B

2006 REVISED STANDARD PLAN RSP ES-1B

7-10-07

DIST	COUNTY	ROUTE	POST MILES TOTAL PROJECT	SHEET NO.	TOTAL SHEETS
03	Yub	70	R7.0/13.6	108	113

REGISTERED ELECTRICAL ENGINEER

October 5, 2007
PLANS APPROVAL DATE

REGISTERED PROFESSIONAL ENGINEER Jeffery G. McRae No. E14512 Exp. 6-30-08 ELECTRICAL STATE OF CALIFORNIA

The State of California or its officers or agents shall not be responsible for the accuracy or completeness of electronic copies of this plan sheet.

To accompany plans dated 7-26-10

EQUIPMENT IDENTIFICATION

ILLUMINATED SIGN IDENTIFICATION NUMBER:

Sign No. 12345 — Sign number - Place on post or structure

10 ISL SCI 1.0

- 1.0 — Transformer rating (kVA)
- SCI — Lighting control type
- ISL — Number and type of fixtures

Do NOT place on standard or structure

ELECTROLIER OR EQUIPMENT IDENTIFICATION NUMBER:

12345 - 15'-0"

- 15'-0" — Mast arm length, if shown. Do not place on standard or structure.
- 12345 — Equipment number - Place on standard or structure. Existing equipment numbers are shown in parenthesis

CONDUIT AND CONDUCTOR IDENTIFICATION:

1½"C, 2#10, 15#14, 2 DLC

- 2#10, 15#14, 2 DLC — Number and size of conductors and cables
- 1½"C — Size of conduit in inches

Ø1, Ø2, Ø2P, etc.	Traffic phase identification for signal faces, detectors and phase diagrams
1 2 3	Project note numbers
A B C	Equipment description, installation or item numbers
1 2 3	Conduit run numbers

SIGNAL AND LIGHTING STANDARD (TYPICAL DESIGNATION):

19A - 3 - 100

- 100 — Wind velocity = 100 mph
- 3 — Case 3 arm loading
- 19A — Standard type
- Standard Plan sheet number
- Detail number or letter

MISCELLANEOUS EQUIPMENT

PROPOSED	EXISTING	
CMS	cms	Changeable message sign
		Closed circuit television camera
		Highway advisory radio pole and antenna
EMS	ems	Extinguishable message sign
M V	m v	Detection device M = Microwave sensor V = Video image sensor

WIRING DIAGRAM LEGEND

P	Pole
CB	Circuit breaker
A	Ampere
V	Volt
M	Metered
UM	Unmetered
NB	Neutral bus
GB	Ground bus
G	Equipment grounding conductor
N	Grounded conductor (Neutral)

External conductor
Conductor or bus
Tie point
Contactor coil
Contactor, Contact NO
Terminal blocks
Contactor, Contact NC
Enclosure bond
Grounding electrode
Circuit breaker
Receptacle

PULL BOXES

PROPOSED EXISTING

Pull box-No. 5 unless otherwise indicated or noted.

3 — 9A(21)

Pull box-Additional designations or descriptions

- 3 = No. 3½ pull box
- 5 = No. 5 pull box
- 6 = No. 6 pull box
- 7 = No. 7 (Ceiling pull box)
- 8 = No. 8 (Pendant soffit pull box)
- 9 = No. 9 pull box
- 9A = No. 9A pull box

- (C) = Communications pull box
- (E) = Pull box with extension
- (S) = Sprinkler control pull box
- (21) = Anchor bolts and conduit for future installation of Type 21 Standard
- (T) = Traffic pull box

VEHICLE DETECTORS

5 J 9 U

- U = Upper
- L = Lower
- Slot number in input file
- Input file (I or J)
- Phase

PROPOSED	EXISTING	
		Type A detector loop. Outline of sawcut shown.
		Type B detector loop. Outline of sawcut shown.
		Type C detector loop. Outline of sawcut shown.
		Type D detector loop. Outline of sawcut shown.
		Type E detector loop. Outline of sawcut shown.
		Type Q detector loop. Outline of sawcut shown.
		Magnetic detector
DH	dh	Detector handhole
		Microwave or video detection zone

STATE OF CALIFORNIA
DEPARTMENT OF TRANSPORTATION

ELECTRICAL SYSTEMS (SYMBOLS AND ABBREVIATIONS)

NO SCALE

RSP ES-1C DATED OCTOBER 5, 2007 SUPERCEDES STANDARD PLAN ES-1C DATED MAY 1, 2006 - PAGE 402 OF THE STANDARD PLANS BOOK DATED MAY 2006.

REVISED STANDARD PLAN RSP ES-1C

2006 REVISED STANDARD PLAN RSP ES-1C

7-10-07

DIST	COUNTY	ROUTE	POST MILES TOTAL PROJECT	SHEET NO.	TOTAL SHEETS
03	Yub	70	R7.0/13.6	109	113

REGISTERED ELECTRICAL ENGINEER

October 5, 2007
PLANS APPROVAL DATE

REGISTERED PROFESSIONAL ENGINEER
Jeffery G. McRae
No. E14512
Exp. 6-30-08
ELECTRICAL
STATE OF CALIFORNIA

The State of California or its officers or agents shall not be responsible for the accuracy or completeness of electronic copies of this plan sheet.

To accompany plans dated 7-26-10

2006 REVISED STANDARD PLAN RSP ES-2C

NOTES-TYPE III SERVICE EQUIPMENT ENCLOSURES:

1. Service equipment enclosure and metering equipment shall meet the requirements of the service utility. The meter area shall have a sealable, lockable, weathertight cover that can be removed without the use of tools.

2. Service equipment enclosures shall be factory wired and conform to NEMA standards.

3. Dimensions of service equipment enclosures shall meet the requirements of the service utility.

4. The dead front panels on Type III service equipment enclosures shall have a continuous stainless steel or aluminum piano hinge. The panel in front of the breakers shall be secured with a latch or captive screws. No live parts shall be mounted on the dead front panel.

5. The exterior door shall have provisions for padlocking. The padlock hole shall be a minimum diameter of 7/16".

6. Enclosures housing transformers of more than one kVA shall have effective screened ventilation louver of not less than 50 square inches. Screen shall be stainless steel No. 304, with a No. 10 size mesh. Framed screen shall be secured with at least four bolts.

7. Fasteners on the exterior of the enclosure shall be vandal-resistant and shall not be removable from the exterior. Exterior screws, nuts, bolts and washers shall be stainless steel.

8. Landing lugs for incoming service conductors shall be compatible with either copper or aluminum conductors sized to suit the conductors shown on the plan. Landing lugs shall be copper or tin-plated aluminum. Neutral bus shall be rated for 125 A and be suitable for copper or aluminum conductors unless otherwise specified. The terminal shall include but not be limited to:

   a) Incoming terminals (landing lugs)
   b) Neutral lugs
   c) Solid neutral terminal strip

9. At least 6 standard single pole circuit breaker spaces, 3/4" nominal, shall be provided for branch circuits. Circuit breaker interiors shall be copper. Interiors of enclosure shall accept plug-in or cable-in/cable-out circuit breakers.

10. Control wiring shall be 600 V, 14 stranded machine tool wire. Where subject to flexing, 19 strand wire shall be used.

11. Main bus shall be rated for 125 A and shall be tin-plated copper.

12. A plastic laminated wiring diagram shall be provided with brass mounting eyelets and attached to the inside of the enclosure and the wiring diagram shall be affixed to the interior with a UL or ETL approved method.

13. An engraved phenolic nameplate on the dead front panel indicating the function of each circuit or device shall be installed with stainless steel rivets or stainless steel screws:

    a) Adjacent to the breaker or device with character size a minimum of 1/8".

    b) At the top of the exterior door panel indicating State system number, voltage level and number of phases with character size a minimum of 3/16".

14. The plan shows the approximate location of devices within the enclosure. Components may be rearranged, however, the "working" clearances within the service equipment enclosure shall be maintained.

15. In unpaved areas a raised portland cement concrete pad 2'-0" x 4" x width of foundation shall be constructed in front of new service equipment enclosure installation. Pad shall be set to elevation of foundation.

16. Foundation shall extend 2" minimum beyond edge of service equipment enclosure.

17. Internal bus, where shown, is typical only. Alternative design of proposed service equipment enclosure shall be submitted to the Engineer for approval.

18. Plug-in circuit breakers may be mounted in the vertical or horizontal position. Cable-in/cable-out circuit breakers shall be mounted in the vertical position.

19. Type III-AF and Type III-BF service equipment enclosures shall have the meter viewing windows located on the front side of the service equipment enclosures.

20. Type III-AR and Type III-BR service equipment enclosures shall be similarly constructed as Type III-AF and Type III-BF respectively, except the meter viewing windows shall be located on the back side of the service equipment enclosures.

21. Minimum clearance shall be required for front and back of service equipment enclosure per National Electrical Code, Article 110.26, "Spaces About Electric Equipment (600 Volts, Nominal, or Less)."

STATE OF CALIFORNIA
DEPARTMENT OF TRANSPORTATION

ELECTRICAL SYSTEMS (SERVICE EQUIPMENT NOTES TYPE III SERIES)

NO SCALE

RSP ES-2C DATED OCTOBER 5, 2007 SUPERCEDES STANDARD PLAN ES-2C
DATED MAY 1, 2006 - PAGE 405 OF THE STANDARD PLANS BOOK DATED MAY 2006.

REVISED STANDARD PLAN RSP ES-2C

DIST	COUNTY	ROUTE	POST MILES TOTAL PROJECT	SHEET NO.	TOTAL SHEETS
03	Yub	70	R7.0/13.6	110	113

REGISTERED ELECTRICAL ENGINEER

October 5, 2007
PLANS APPROVAL DATE

REGISTERED PROFESSIONAL ENGINEER Jeffery G. McRae No. E14512 Exp. 6-30-08 ELECTRICAL STATE OF CALIFORNIA

The State of California or its officers or agents shall not be responsible for the accuracy or completeness of electronic copies of this plan sheet.

To accompany plans dated 7-26-10

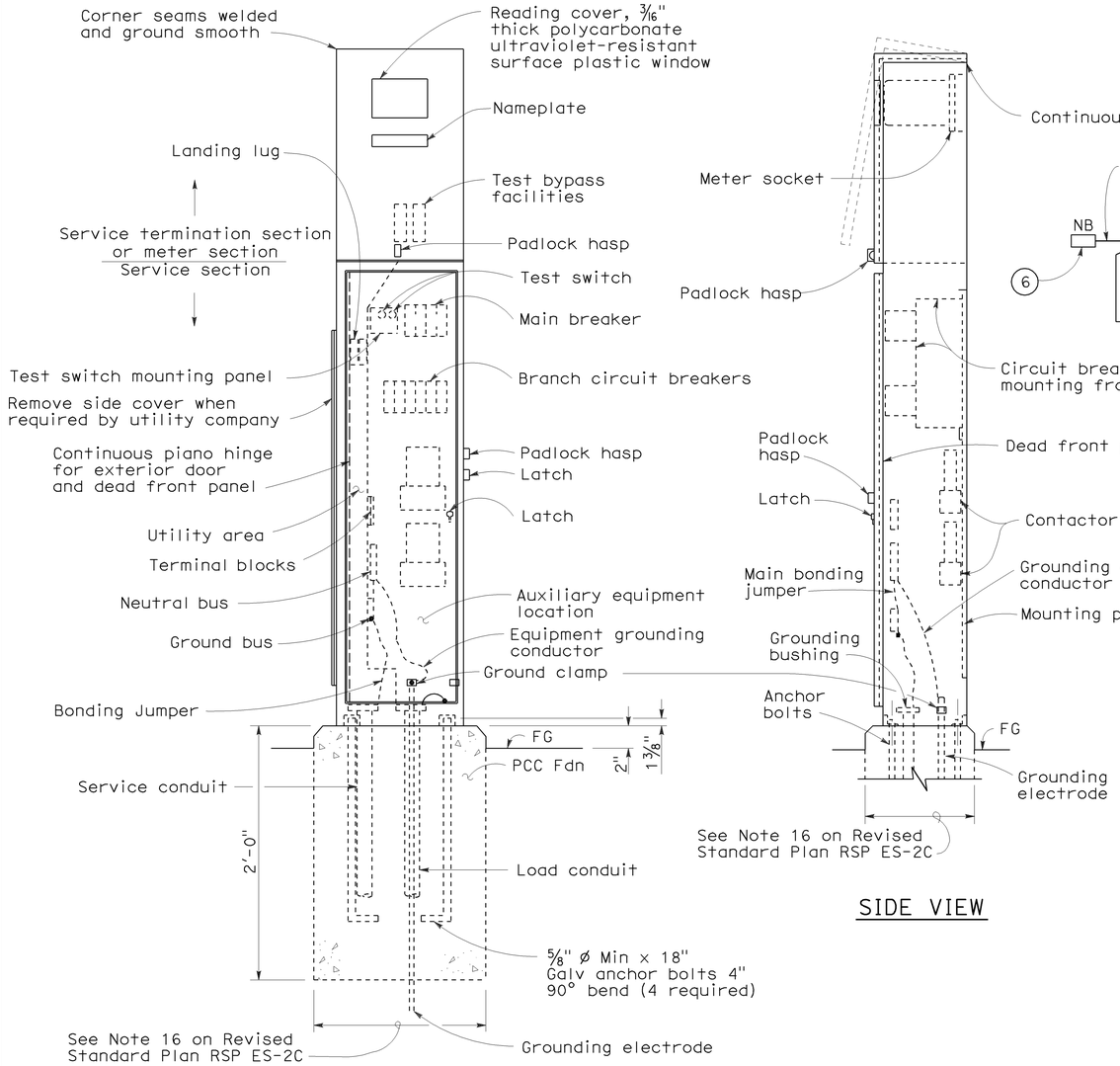

TYPE III-AF SERVICE EQUIPMENT ENCLOSURE (TYPICAL)

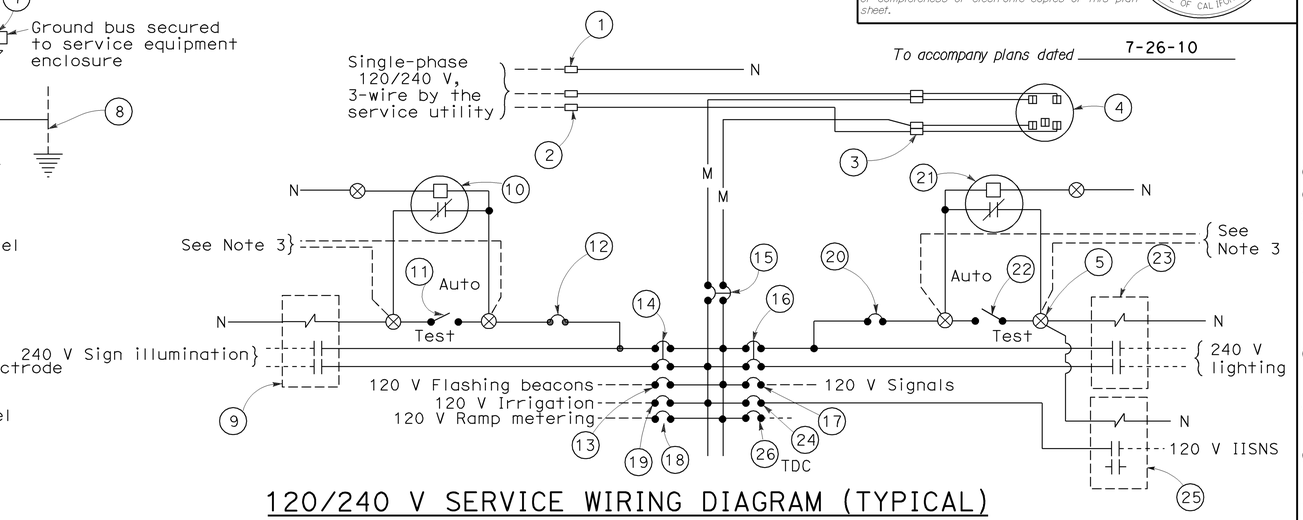

120/240 V SERVICE WIRING DIAGRAM (TYPICAL)

TYPE III-A SERVICE (120/240 V) EQUIPMENT LEGEND

ITEM No.	COMPONENT	NAME PLATE DESCRIPTION	ITEM No.	COMPONENT	NAME PLATE DESCRIPTION
1	Neutral lug		14	30 A, 240 V, 2P, CB	Sign Illumination
2	Landing lug (Note 6)		15	100 A, 240 V, 2P, CB	Main Breaker
3	Test bypass facility		16	30 A, 240 V, 2P, CB	Lighting
4	Meter socket and support		17	50 A, 120 V, 1P, CB	Signals
5	Terminal blocks		18	30 A, 120 V, 1P, CB	Ramp Metering
6	Neutral bus		19	20 A, 120 V, 1P, CB	Irrigation
7	Ground bus		20	15 A, 120 V, 1P, CB	Lighting Control
8	Grounding electrode		21	Photoelectric unit (Note 7)	
9	30 A, 2PNO Contactor	Sign Illumination	22	15 A, 1P, Test switch	Lighting Test Switch
10	Photoelectric unit (Note 7)		23	60 A, 2PNO Contactor	Lighting
11	15 A, 1P, Test switch	Sign Illumination Test Switch	24	15 A, 120 V, 1P, CB	IISNS
12	15 A, 120 V, 1P, CB	Sign Illumination Control	25	30 A, 2PNO Contactor	IISNS
13	15 A, 120 V, 1P, CB	Flashing Beacon	26	20 A, 120 V, 1P, CB	Telephone Demarcation Cabinet

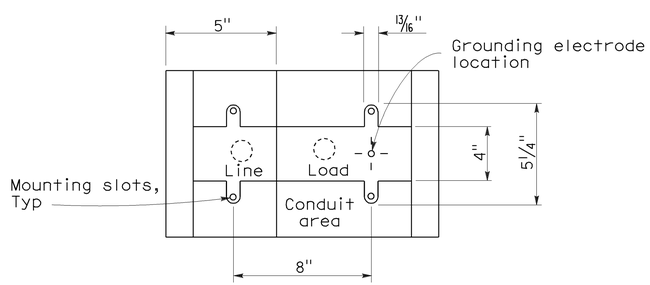

BASE FOR TYPE III-A SERVICE EQUIPMENT ENCLOSURE

NOTES: (FOR SERVICE EQUIPMENT ENCLOSURE)

1. Voltage ratings of service equipment shall conform to the service voltages indicated on the plans.
2. Unless otherwise indicated on the plans, service equipment items shall be provided for each service equipment enclosure as shown.
3. Connect to remote test switch mounted on lighting standards, sign post or structure when required.
4. Items No. 1 and 6 shall be isolated from the service equipment enclosure.
5. Meter sockets shall be 5 clip type.
6. The landing lug shall be suitable for multiple conductors.
7. Type V photoelectric control shall be used unless otherwise indicated on the plans.

STATE OF CALIFORNIA
DEPARTMENT OF TRANSPORTATION

ELECTRICAL SYSTEMS (SERVICE EQUIPMENT AND TYPICAL WIRING DIAGRAM, TYPE III-A SERIES)

NO SCALE

RSP ES-2D DATED OCTOBER 5, 2007 SUPERCEDES STANDARD PLAN ES-2D DATED MAY 1, 2006 - PAGE 406 OF THE STANDARD PLANS BOOK DATED MAY 2006.

REVISED STANDARD PLAN RSP ES-2D

2006 REVISED STANDARD PLAN RSP ES-2D

7-10-07

DIST	COUNTY	ROUTE	POST MILES TOTAL PROJECT	SHEET NO.	TOTAL SHEETS
03	Yub	70	R7.0/13.6	111	113

REGISTERED ELECTRICAL ENGINEER

October 5, 2007
PLANS APPROVAL DATE

REGISTERED PROFESSIONAL ENGINEER Jeffery G. McRae No. E14512 Exp. 6-30-08 ELECTRICAL STATE OF CALIFORNIA

The State of California or its officers or agents shall not be responsible for the accuracy or completeness of electronic copies of this plan sheet.

To accompany plans dated 7-26-10

LOOP INSTALLATION PROCEDURE

1. Loops shall be centered in lanes.
2. Saw slots in pavement for loop conductors as shown in details.
3. Distance between side of loop and a lead-in saw cut from adjacent detectors shall be 2'-0" minimum. Distance between lead-in saw cuts shall be 6" minimum.
4. Bottom of saw slot shall be smooth with no sharp edges.
5. Slots shall be washed until clean, blown out and thoroughly dried before installing loop conductors.
6. Adjacent loops on the same sensor unit channel shall be wound in opposite directions.
7. Identify and tag loop circuit pairs in the pull box with loop number, start (S) and finish (F) of conductor. Identify and tag lead-in-cable with sensor number and phase.
8. Install loop conductor in slot using a 3/16" to 1/4" thick wood paddle. Hold loop conductors with wood paddles (at the bottom of the sawed slot) during sealant placement.
9. No more than 2 twisted pairs shall be installed in one sawed slot.
10. Allow additional 5'-0" of slack length of conductor for the lead-in run to pull box.
11. The additional length of each conductor for each loop shall be twisted together into a pair (6 turns per 3'-4" minimum) before being placed in the slot and conduit leading to pull box.
12. Test each loop circuit for continuity, circuit resistance and insulation resistance at the pull box before filling slots.
13. Fill slots as shown in details.
14. Splice loop conductors to lead-in-cable. Splices shall be soldered.
15. End of lead-in-cable and Type 2 loop conductor shall be waterproofed prior to installing in conduit to prevent moisture from entering the cable.
16. Lead-in-cable shall not be spliced between the pull box and the controller cabinet terminals.
17. Test each loop circuit for continuity, circuit resistance and insulation resistance at the controller cabinet location.
18. Where loop conductors are not to be spliced to a lead-in-cable, the ends of the conductors shall be taped and waterproofed with electrical insulating coating.

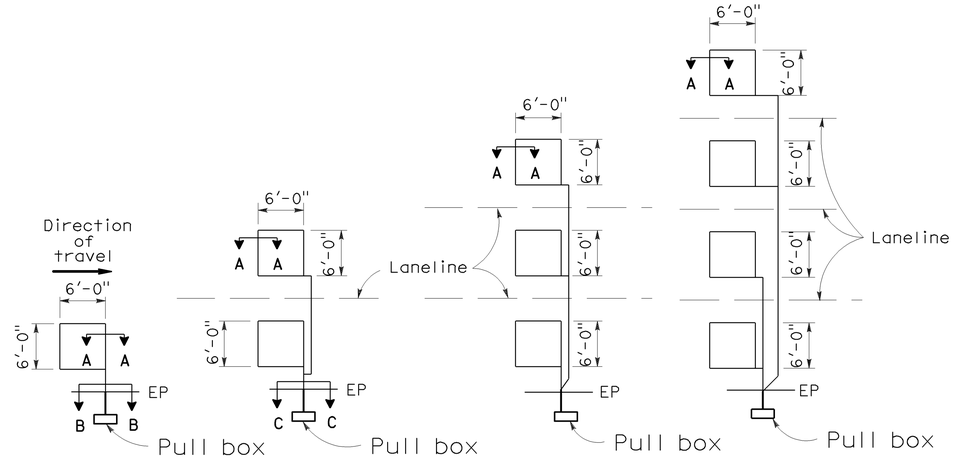

TYPE 1A INSTALLATION | TYPE 2A INSTALLATION | TYPE 3A INSTALLATION | TYPE 4A INSTALLATION

SAWCUT DETAILS

(Type A loop detector configurations illustrated)

1. 1A thru 4A = 1 Type A loop configuration in each lane.
2. 1B thru 4B = 1 Type B loop configuration in each lane.
3. 1C = 1 Type C loop configuration entering lanes as required.
4. 1D thru 4D = 1 Type D loop configuration in each lane.
5. 1E thru 4E = 1 Type E loop configuration in each lane.
6. 1Q thru 4Q = 1 Type Q loop configuration in each lane. (Use Type A, B, C, D, E or Q loop detector configurations only when specified or shown on plans)

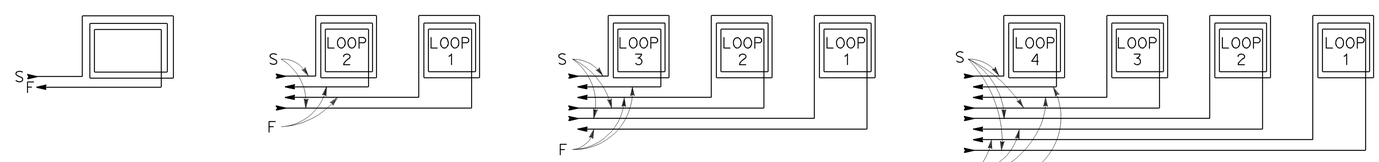

WINDING DETAILS

See Notes 6 and 7

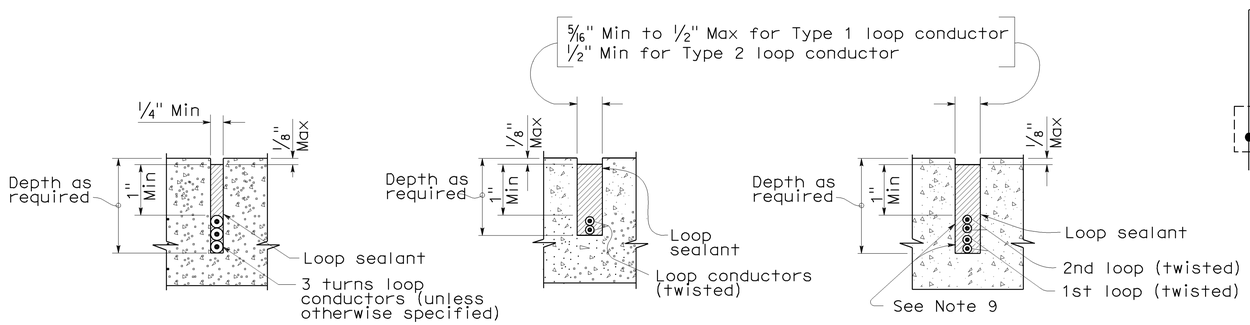

SECTION A-A | SECTION B-B | SECTION C-C

SLOT DETAILS - TYPE 1 AND TYPE 2 LOOP CONDUCTOR

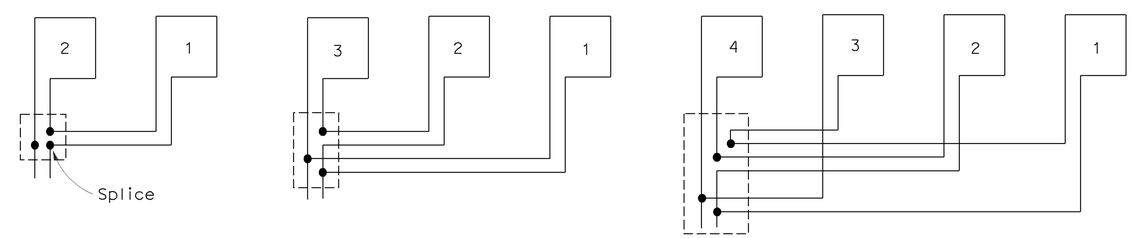

TYPICAL LOOP CONNECTIONS

(Dashed lines represent the pull box)

STATE OF CALIFORNIA
DEPARTMENT OF TRANSPORTATION

ELECTRICAL SYSTEMS (DETECTORS)

NO SCALE

RSP ES-5A DATED OCTOBER 5, 2007 SUPERCEDES STANDARD PLAN ES-5A DATED MAY 1, 2006 - PAGE 423 OF THE STANDARD PLANS BOOK DATED MAY 2006.

REVISED STANDARD PLAN RSP ES-5A

2006 REVISED STANDARD PLAN RSP ES-5A

8-17-07

DIST	COUNTY	ROUTE	POST MILES TOTAL PROJECT	SHEET NO.	TOTAL SHEETS
03	Yub	70	R7.0/13.6	112	113

REGISTERED CIVIL ENGINEER

October 5, 2007
PLANS APPROVAL DATE

REGISTERED PROFESSIONAL ENGINEER Stanley P. Johnson No. C57793 Exp. 3-31-08 CIVIL STATE OF CALIFORNIA

The State of California or its officers or agents shall not be responsible for the accuracy or completeness of electronic copies of this plan sheet.

To accompany plans dated 7-26-10

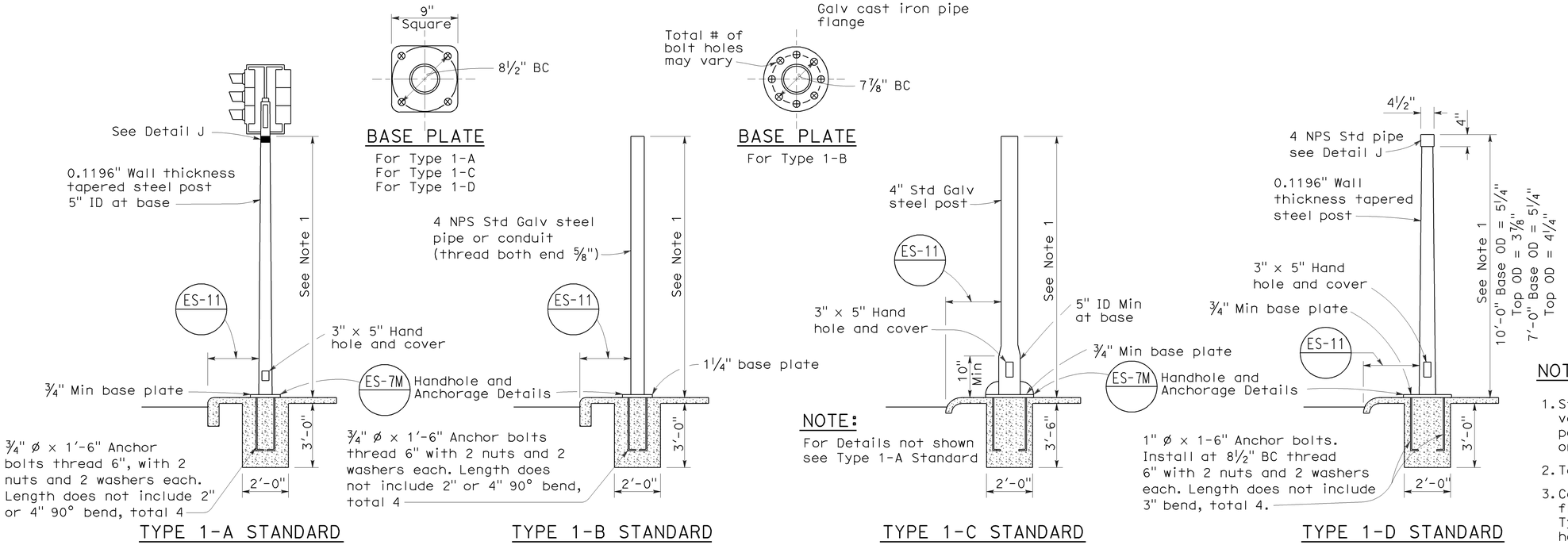

TYPE 1 SIGNAL STANDARDS

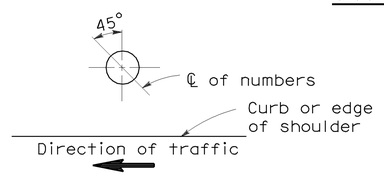

PLAN

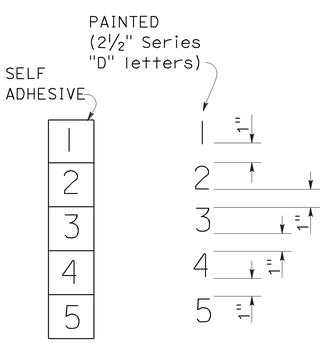

NUMBER DETAIL

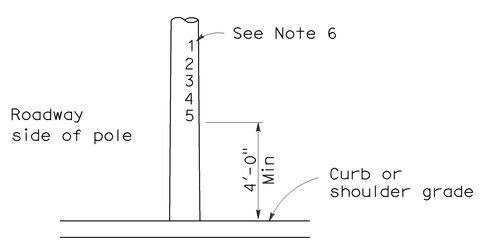

TYPICAL NUMBER FORMAT

LOCATION OF EQUIPMENT NUMBERS ON STANDARDS AND POSTS

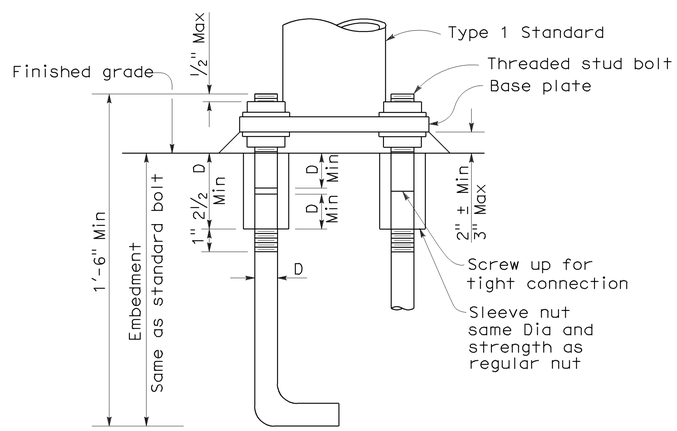

ANCHOR BOLTS WITH SLEEVE NUTS

Sleeve nuts to be used only when shown or specified on Project Plans

D = Diameter of anchor bolt

NOTES:

1. Standards shall be 10'-0" ± 2" for vehicle signals and 7'-0" ± 2" for pedestrian signals unless otherwise noted on plans.
2. Top of standards shall be 4½" OD.
3. Conduits shall extend 2" maximum above finished surface of foundation and for Types 1-A, 1-C and 1-D shall be sloped toward handhole.
4. Anchor bolts shall be bonded to conduit or grounding conductor.
5. Conduit between standard and adjacent pull box shall be 2" minimum.
6. Paint numbers on roadway side facing traffic when electrolier or post is left of direction of traffic.

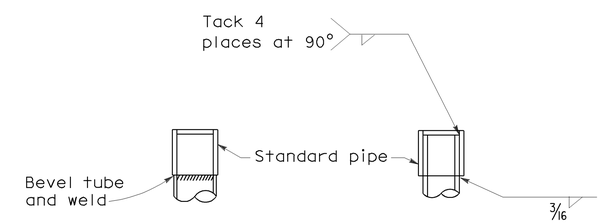

DETAIL J

Tube may be inserted into pipe or butted as required

STATE OF CALIFORNIA
DEPARTMENT OF TRANSPORTATION

ELECTRICAL SYSTEMS (SIGNAL AND LIGHTING STANDARD TYPE 1 STANDARD AND EQUIPMENT NUMBERING)

NO SCALE

RSP ES-7B DATED OCTOBER 5, 2007 SUPERCEDES STANDARD PLAN ES-7B DATED MAY 1, 2006 - PAGE 438 OF THE STANDARD PLANS BOOK DATED MAY 2006.

REVISED STANDARD PLAN RSP ES-7B

2006 REVISED STANDARD PLAN RSP ES-7B

7-10-07

DIST	COUNTY	ROUTE	POST MILES TOTAL PROJECT	SHEET NO.	TOTAL SHEETS
03	Yub	70	R7.0/13.6	113	113

REGISTERED ELECTRICAL ENGINEER

October 5, 2007
PLANS APPROVAL DATE

REGISTERED PROFESSIONAL ENGINEER Jeffery G. McRae No. E14512 Exp. 6-30-08 ELECTRICAL STATE OF CALIFORNIA

The State of California or its officers or agents shall not be responsible for the accuracy or completeness of electronic copies of this plan sheet.

To accompany plans dated 7-26-10

2006 REVISED STANDARD PLAN RSP ES-15D

NOTES: (FOR LIGHTING AND SIGN ILLUMINATION CONTROL)

1. The ballast voltages of lighting fixtures and luminaires shall match line service voltages.
2. Voltage rating of photoelectric controls shall conform to the service voltage indicated on the plans.
3. Terminal strip shall be provided for wiring to fixtures.
4. Type SC1A, SC2A, SC3A controls are similar to Types SC1, SC2 and SC3 controls respectively except test switch and wiring are not required.

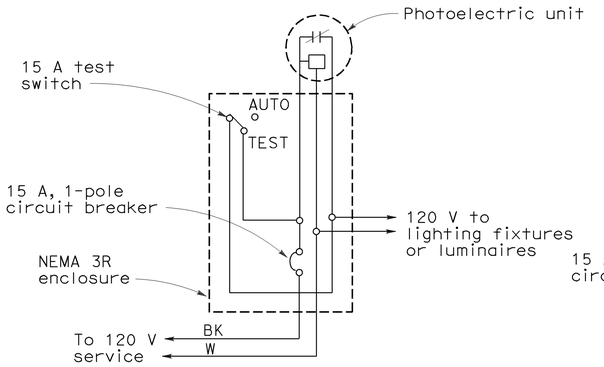

TYPE LC1 CONTROL

For 120 V unswitched circuit with no more than 800 W load.

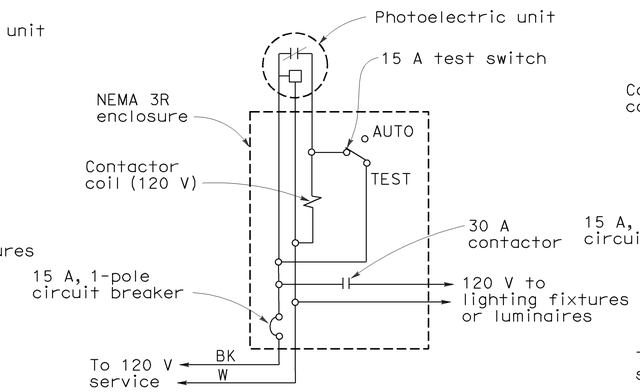

TYPE LC2 CONTROL

For 120 V unswitched circuit

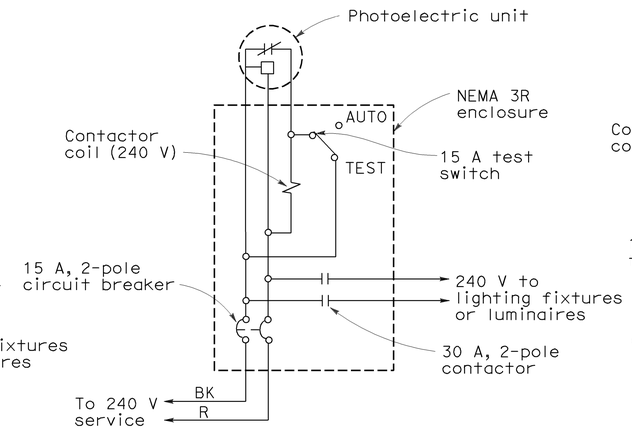

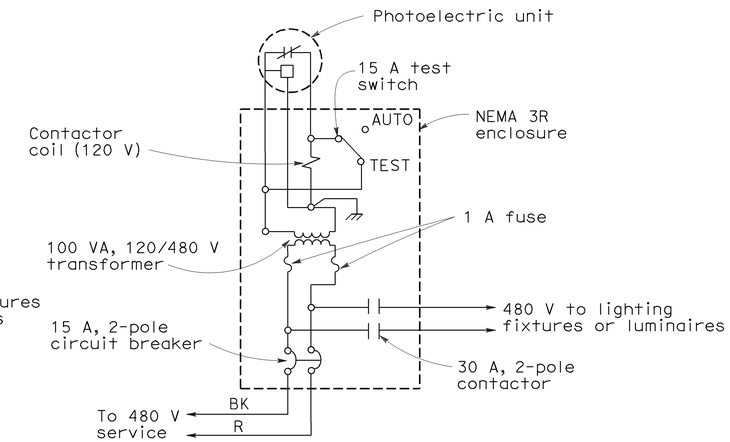

TYPE LC3 CONTROL

For 240 V and 480 V unswitched circuits

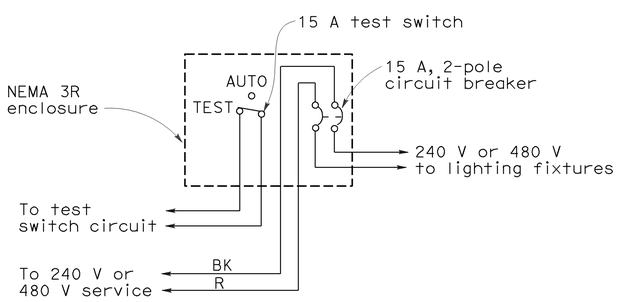

TYPE SC1 CONTROL

For 240 V or 480 V switched circuit, see Note 4 for Type SC1A

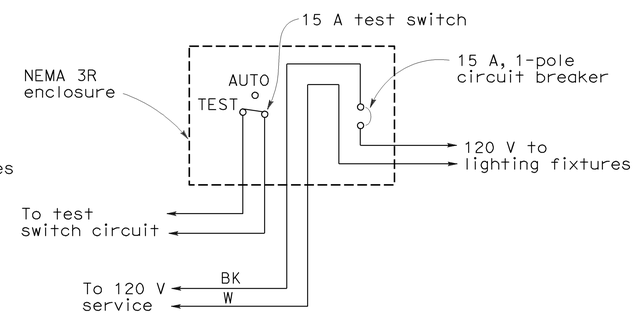

TYPE SC2 CONTROL

For 120 V switched circuit, see Note 4 for Type SC2A

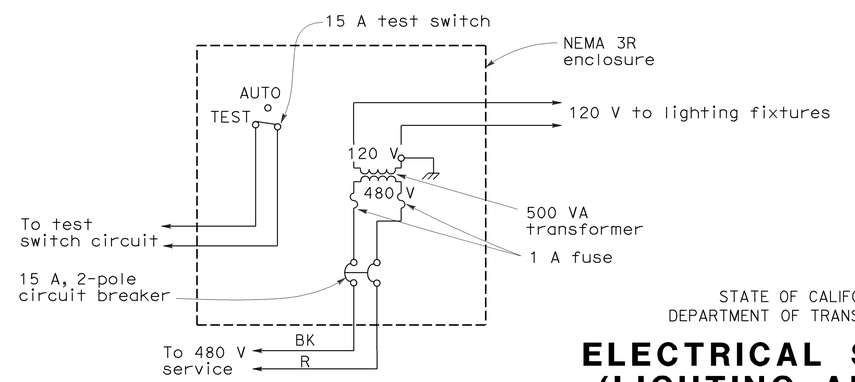

TYPE SC3 CONTROL

For 480 V switched sign circuit, see Note 4 for Type SC3A

STATE OF CALIFORNIA
DEPARTMENT OF TRANSPORTATION

ELECTRICAL SYSTEMS (LIGHTING AND SIGN ILLUMINATION CONTROL)

NO SCALE

RSP ES-15D DATED OCTOBER 5, 2007 SUPERCEDES STANDARD PLAN ES-15D DATED MAY 1, 2006 - PAGE 472 OF THE STANDARD PLANS BOOK DATED MAY 2006.

REVISED STANDARD PLAN RSP ES-15D

9-10-07