Dist	COUNTY	ROUTE	POST MILES TOTAL PROJECT	SHEET No.	TOTAL SHEETS
03	Sut	20	11.2/17.0	1	31

NH-P020(153)E

STATE OF CALIFORNIA
DEPARTMENT OF TRANSPORTATION

PROJECT PLANS FOR CONSTRUCTION ON
STATE HIGHWAY

IN SUTTER COUNTY
IN AND NEAR YUBA CITY
FROM 0.5 MILE EAST OF NORTH HUMPHREY ROAD
TO 0.1 MILE WEST OF THE YUBA/SUTTER COUNTY LINE

TO BE SUPPLEMENTED BY STANDARD PLANS DATED MAY 2006

INDEX OF PLANS

SHEET No.	DESCRIPTION
1	TITLE AND LOCATION MAP
2-4	TYPICAL CROSS SECTIONS
5-7	CONSTRUCTION DETAILS
8	DRAINAGE PLAN AND PROFILE
9	DRAINAGE DETAILS
10	DRAINAGE QUANTITIES
11-13	CONSTRUCTION AREA SIGNS
14	PAVEMENT DELINEATION QUANTITIES
15-16	SIGN PLAN
17	SIGN DETAILS AND QUANTITIES
18	SUMMARY OF QUANTITIES
19-20	ELECTRICAL PLANS
21-31	REVISED STANDARD PLANS

THE STANDARD PLANS LIST APPLICABLE TO THIS CONTRACT IS INCLUDED IN THE NOTICE TO BIDDERS AND SPECIAL PROVISIONS BOOK.

LOCATION MAP

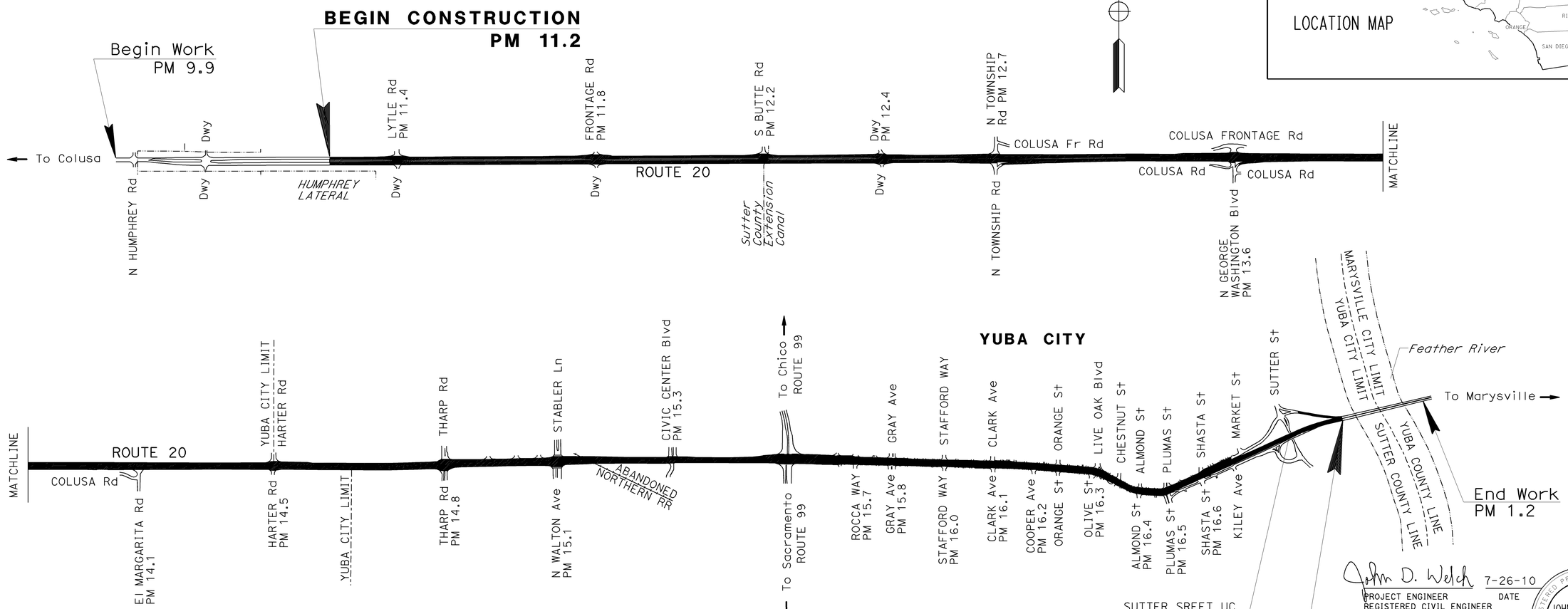

NO SCALE

THE CONTRACTOR SHALL POSSESS THE CLASS (OR CLASSES) OF LICENSE AS SPECIFIED IN THE "NOTICE TO BIDDERS."

John D. Welch 7-26-10
PROJECT ENGINEER DATE
REGISTERED CIVIL ENGINEER

July 26, 2010
PLANS APPROVAL DATE

REGISTERED PROFESSIONAL ENGINEER JOHN D. WELCH No. 58303 Exp. 6/30/12 CIVIL STATE OF CALIFORNIA

THE STATE OF CALIFORNIA OR ITS OFFICERS OR AGENTS SHALL NOT BE RESPONSIBLE FOR THE ACCURACY OR COMPLETENESS OF SCANNED COPIES OF THIS PLAN SHEET.

PROJECT MANAGER M. BARTLETT
DESIGN ENGINEER MASTRI ALVANDI

LAST REVISION 7-26-10
DATE PLOTTED => 05-AUG-2010
TIME PLOTTED => 13:45

CONTRACT No.	03-1F4704
PROJECT ID	0300020028

Dist	COUNTY	ROUTE	POST MILES TOTAL PROJECT	SHEET No.	TOTAL SHEETS
03	Sut	20	11.2/17.0	2	31

John D. Welch 7-26-10
REGISTERED CIVIL ENGINEER DATE

7-26-10
PLANS APPROVAL DATE

REGISTERED PROFESSIONAL ENGINEER JOHN D. WELCH No. 58303 Exp. 6/30/12 CIVIL STATE OF CALIFORNIA

THE STATE OF CALIFORNIA OR ITS OFFICERS OR AGENTS SHALL NOT BE RESPONSIBLE FOR THE ACCURACY OR COMPLETENESS OF ELECTRONIC COPIES OF THIS PLAN SHEET.

DESIGN DESIGNATION

V = 35-55 MPH
ADT (2011) = 48,800
ADT (2031) = 87,500
DHV (2011) = 4,830
D = 60%
T = 3.0%
TI_{10} = 10.5

NOTES:

1. DIMENSIONS OF THE PAVEMENT STRUCTURES (STRUCTURAL SECTIONS) ARE SUBJECT TO TOLERANCES SPECIFIED IN THE STANDARD SPECIFICATIONS.
2. SUPERELEVATION AS SHOWN OR AS DIRECTED BY THE ENGINEER.
3. THE LIMITS OF OVERLAY AND COLD PLANE ARE EP TO EP AND LIMIT LINE TO LIMIT LINE AS SHOWN ON C-3 OR AS DIRECTED BY THE ENGINEER.
4. EXISTING UTILITY FACILITIES HAVE NOT BEEN PLOTTED ON THESE PLANS.

ABBREVIATIONS:

LL = LANE LINE
RWMA-O = RUBBERIZED WARM MIX ASPHALT (TYPE O)
HMA-A = HOT MIX ASPHALT (TYPE A)

[1] = Exist
0.05′ OGAC
0.35′ AC
0.67′ AB or 0.67′ CTB
0.67′-1.00′ AS

[2] = 0.40′ COLD PLANE AC
0.10′ RWMA-O
0.35′ HMA-A

[3] = 0.35′ COLD PLANE AC
0.35′ HMA-A

[4] = Exist
0.25′-0.33′ AC
0.67′ AB or 0.67′ CTB
0.67′-1.00′ AS

[5] = 0.25′ COLD PLANE AC
0.25′ HMA-A

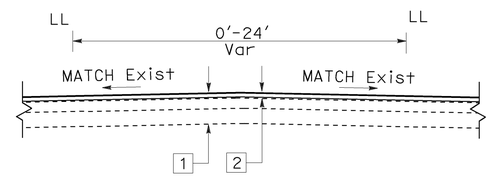

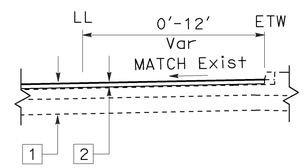

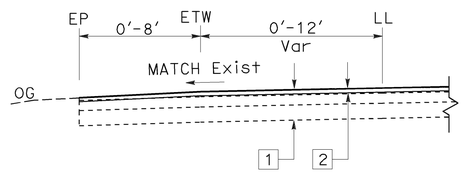

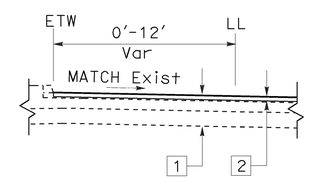

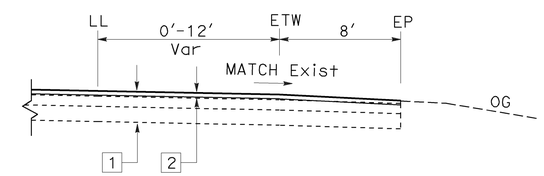

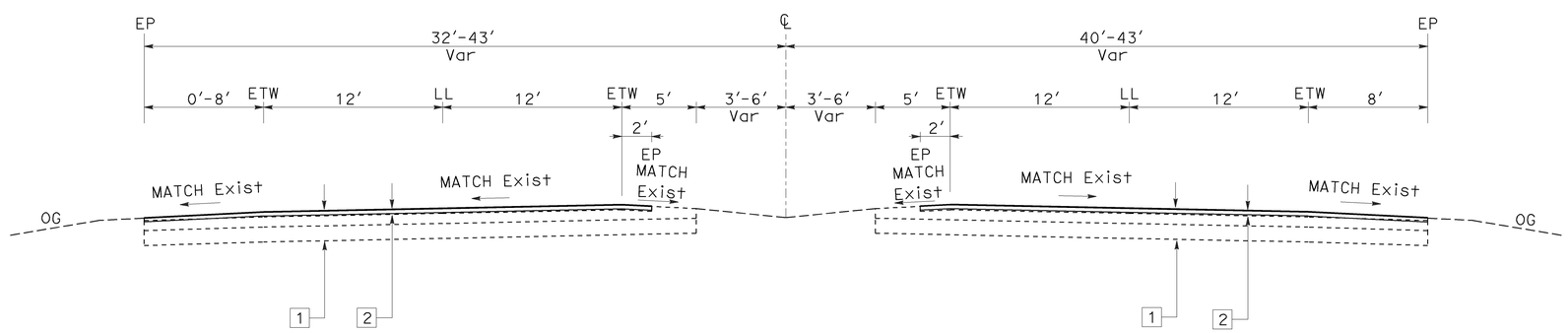

ROUTE 20
PM 11.2 TO 14.8

TYPICAL CROSS SECTIONS

NO SCALE

X-1

STATE OF CALIFORNIA - DEPARTMENT OF TRANSPORTATION
Caltrans
NORTH REGION
OFFICE OF PROJECT DEVELOPMENT
TAHOE TEAM TT4

FUNCTIONAL SUPERVISOR: MASTRI ALVANDI
CALCULATED - DESIGNED BY: CHARLES WOOTEN
CHECKED BY: JOHN WELCH
REVISED BY: CW
DATE REVISED: 06-21-10

LAST REVISION 7-26-10
DATE PLOTTED => 05-AUG-2010
TIME PLOTTED => 13:45

Dist	COUNTY	ROUTE	POST MILES TOTAL PROJECT	SHEET No.	TOTAL SHEETS
03	Sut	20	11.2/17.0	3	31

John D. Welch 7-26-10
REGISTERED CIVIL ENGINEER DATE

7-26-10
PLANS APPROVAL DATE

REGISTERED PROFESSIONAL ENGINEER
JOHN D. WELCH
No. 58303
Exp. 6/30/12
CIVIL
STATE OF CALIFORNIA

THE STATE OF CALIFORNIA OR ITS OFFICERS OR AGENTS SHALL NOT BE RESPONSIBLE FOR THE ACCURACY OR COMPLETENESS OF ELECTRONIC COPIES OF THIS PLAN SHEET.

NOTES:

1. EXISTING UTILITY FACILITIES HAVE NOT BEEN PLOTTED ON THESE PLANS.

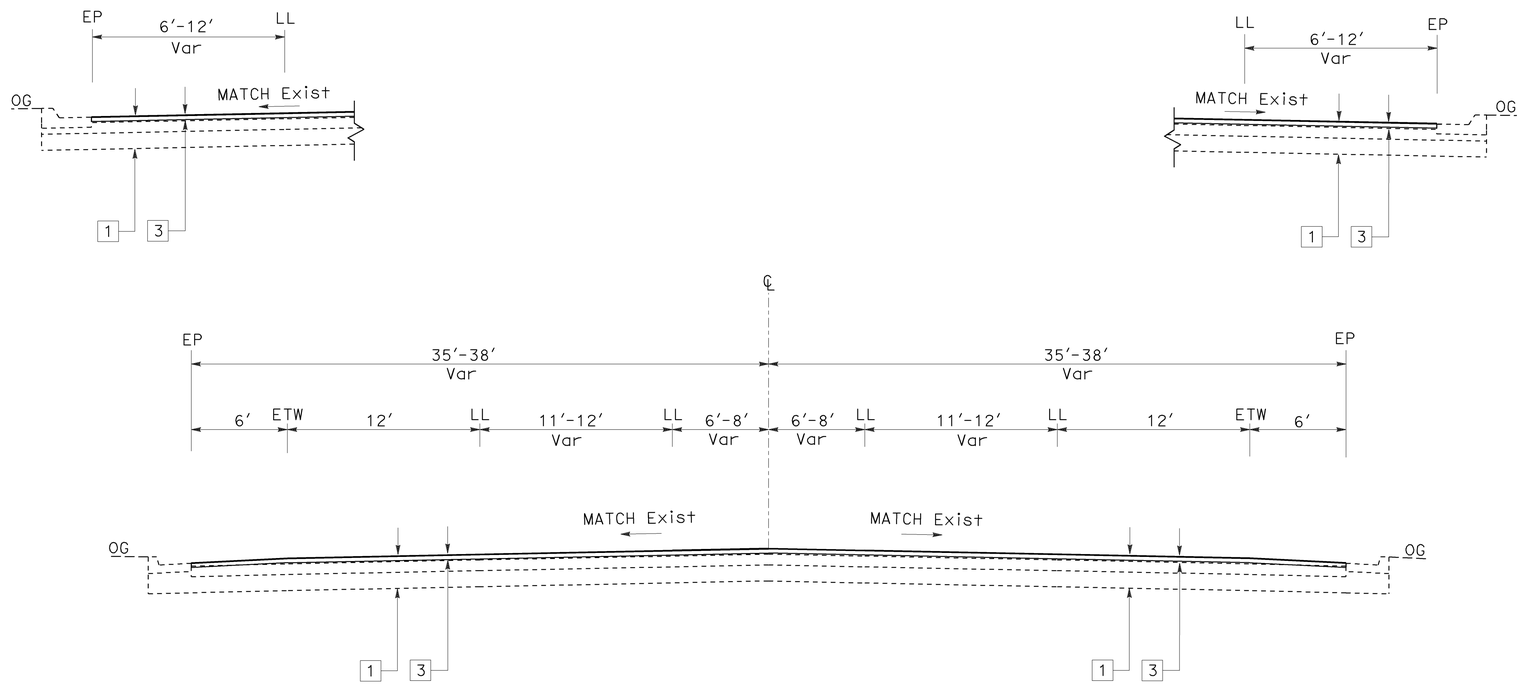

ROUTE 20

PM 14.8 TO 15.5

TYPICAL CROSS SECTIONS

NO SCALE

X-2

STATE OF CALIFORNIA - DEPARTMENT OF TRANSPORTATION
Caltrans
NORTH REGION
OFFICE OF PROJECT DEVELOPMENT
TAHOE TEAM TT4

FUNCTIONAL SUPERVISOR: MASTRI ALVANDI
CALCULATED - DESIGNED BY: CHARLES WOOTEN
CHECKED BY: JOHN WELCH
REVISED BY: CW
DATE REVISED: 06-21-10

LAST REVISION 7-26-10
DATE PLOTTED => 05-AUG-2010
TIME PLOTTED => 13:45

Dist	COUNTY	ROUTE	POST MILES TOTAL PROJECT	SHEET No.	TOTAL SHEETS
03	Sut	20	11.2/17.0	4	31

REGISTERED CIVIL ENGINEER DATE 7-26-10

PLANS APPROVAL DATE 7-26-10

REGISTERED PROFESSIONAL ENGINEER JOHN D. WELCH No. 58303 Exp. 6/30/12 CIVIL STATE OF CALIFORNIA

THE STATE OF CALIFORNIA OR ITS OFFICERS OR AGENTS SHALL NOT BE RESPONSIBLE FOR THE ACCURACY OR COMPLETENESS OF ELECTRONIC COPIES OF THIS PLAN SHEET.

NOTES:

1. RESURFACE SHALL NOT INCLUDE THE SUTTER St UC BRIDGE DECK (Br No. 18-0024) LOCATED AT PM16.84.
2. EXISTING UTILITY FACILITIES HAVE NOT BEEN PLOTTED ON THESE PLANS.

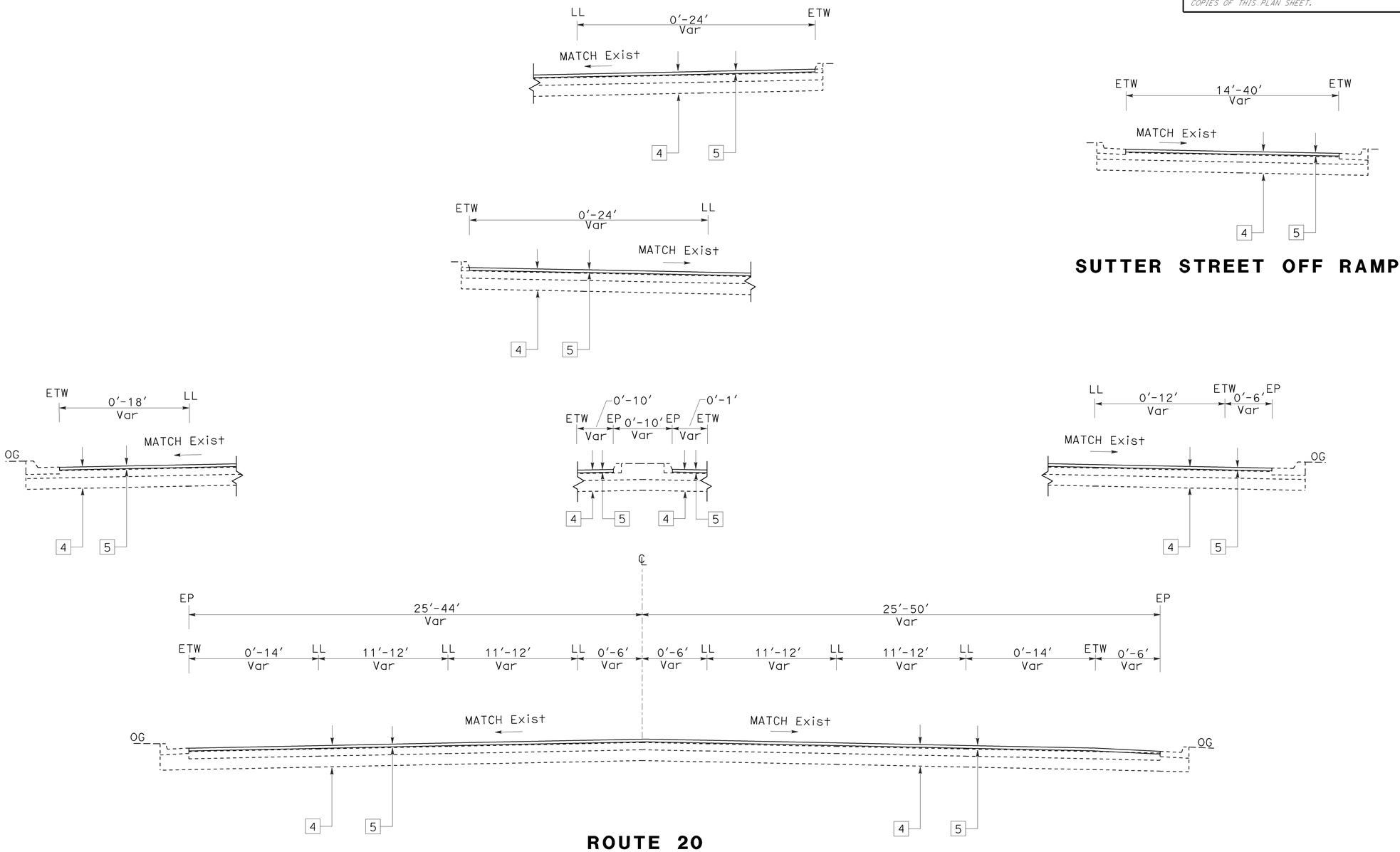

SUTTER STREET OFF RAMP

ROUTE 20

PM 15.6 TO 17.0

TYPICAL CROSS SECTIONS

NO SCALE

X-3

STATE OF CALIFORNIA - DEPARTMENT OF TRANSPORTATION

Caltrans

NORTH REGION
OFFICE OF PROJECT DEVELOPMENT
TAHOE TEAM TT4

FUNCTIONAL SUPERVISOR: MASTRI ALVANDI

CALCULATED - DESIGNED BY: CHARLES WOOTEN

CHECKED BY: JOHN WELCH

REVISED BY: CW

DATE REVISED: 06-21-10

LAST REVISION 7-26-10

DATE PLOTTED => 05-AUG-2010
TIME PLOTTED => 13:46

Dist	COUNTY	ROUTE	POST MILES TOTAL PROJECT	SHEET No.	TOTAL SHEETS
03	Sut	20	11.2/17.0	5	31

John D. Welch 7-26-10
REGISTERED CIVIL ENGINEER DATE

7-26-10
PLANS APPROVAL DATE

REGISTERED PROFESSIONAL ENGINEER JOHN D. WELCH No. 58303 Exp. 6/30/12 CIVIL STATE OF CALIFORNIA

THE STATE OF CALIFORNIA OR ITS OFFICERS OR AGENTS SHALL NOT BE RESPONSIBLE FOR THE ACCURACY OR COMPLETENESS OF ELECTRONIC COPIES OF THIS PLAN SHEET.

NOTES

1. DIMENSIONS ARE Approx AND SHALL BE VERIFIED BY THE CONTRACTOR PRIOR TO CONSTRUCTION.
2. EXISTING UTILITY FACILITIES HAVE NOT BEEN PLOTTED ON THESE PLANS.

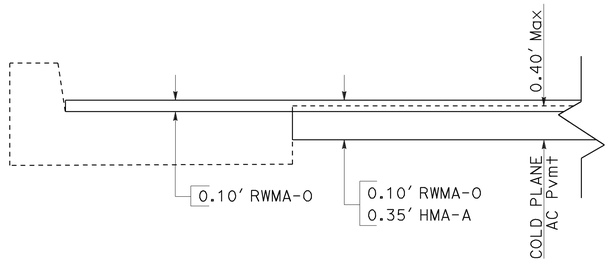

LEFT TURN POCKETS AT N TOWNSHIP Rd AND N GEORGE WASHINGTON Blvd

PLACE RWMA-O OVER EXISTING PCC GUTTER PAN

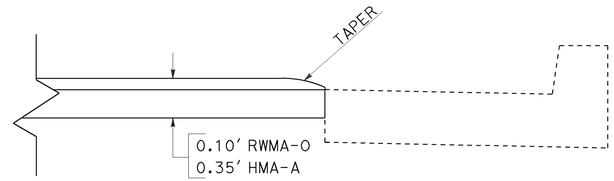

TAPER RWMA-O AT Exist PCC GUTTER PAN

PM 11.2 - 14.8

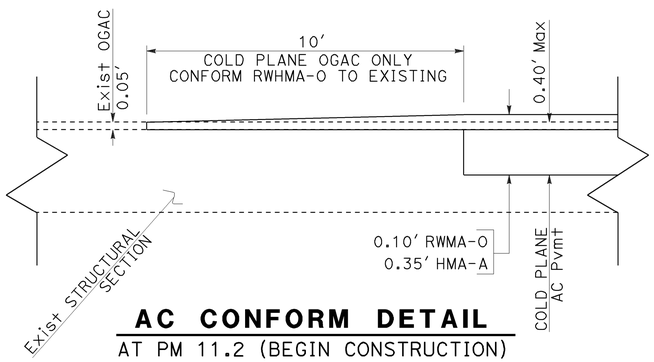

AC CONFORM DETAIL

AT PM 11.2 (BEGIN CONSTRUCTION)

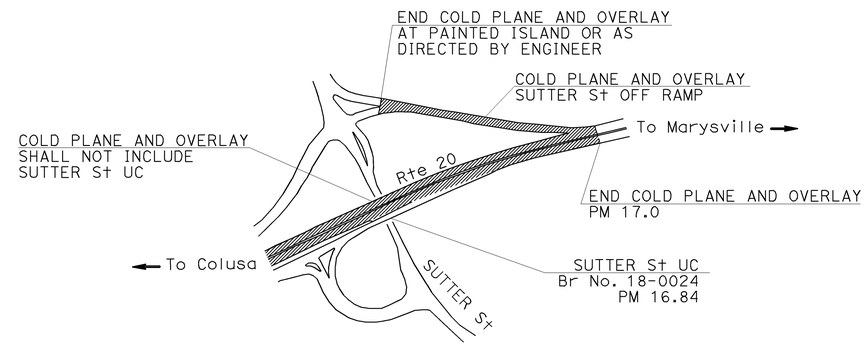

SUTTER ST OFF RAMP PAVE DETAIL

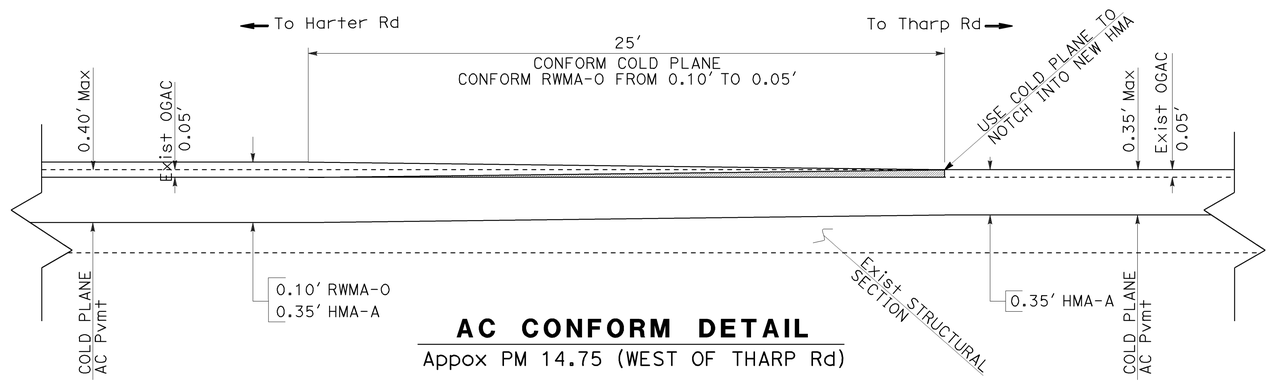

AC CONFORM DETAIL

Appox PM 14.75 (WEST OF THARP Rd)

CONSTRUCTION DETAILS

NO SCALE

C-1

REVISED BY	CW
DATE REVISED	06-21-10
CALCULATED - DESIGNED BY	CHARLES WOOTEN
CHECKED BY	JOHN WELCH
FUNCTIONAL SUPERVISOR	MASTRI ALVANDI

STATE OF CALIFORNIA - DEPARTMENT OF TRANSPORTATION
Caltrans
NORTH REGION
OFFICE OF PROJECT DEVELOPMENT
TAHOE TEAM TT4

LAST REVISION 7-26-10
DATE PLOTTED => 05-AUG-2010
TIME PLOTTED => 13:46

Dist	COUNTY	ROUTE	POST MILES TOTAL PROJECT	SHEET No.	TOTAL SHEETS
03	Sut	20	11.2/17.0	6	31

REGISTERED CIVIL ENGINEER 7-26-10 DATE

7-26-10
PLANS APPROVAL DATE

REGISTERED PROFESSIONAL ENGINEER JOHN D. WELCH No. 58303 Exp. 6/30/12 CIVIL STATE OF CALIFORNIA

THE STATE OF CALIFORNIA OR ITS OFFICERS OR AGENTS SHALL NOT BE RESPONSIBLE FOR THE ACCURACY OR COMPLETENESS OF ELECTRONIC COPIES OF THIS PLAN SHEET.

NOTES

1. DIMENSIONS ARE Approx AND SHALL BE VERIFIED BY THE CONTRACTOR PRIOR TO CONSTRUCTION.
2. NEW ASPHALT SURFACES SHALL MATCH EXISTING AC SURFACE Elev AND CROSS SLOPES.
3. EXISTING UTILITY FACILITIES HAVE NOT BEEN PLOTTED ON THESE PLANS.

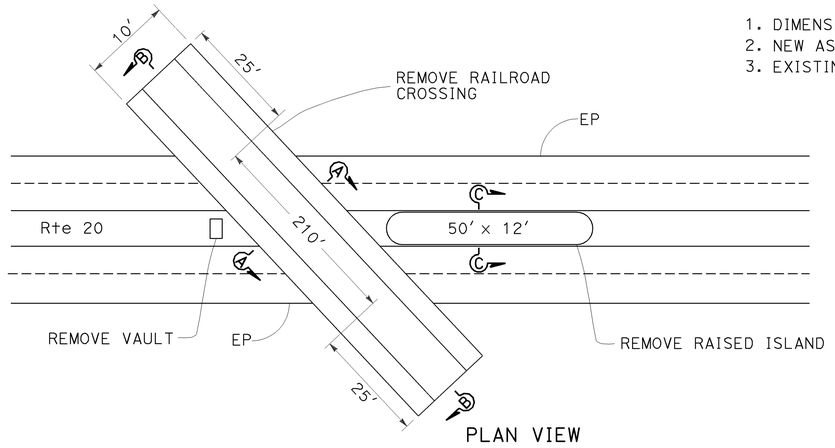

PLAN VIEW

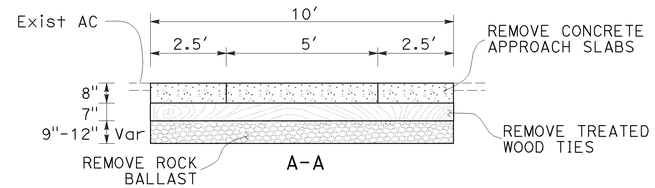

A-A

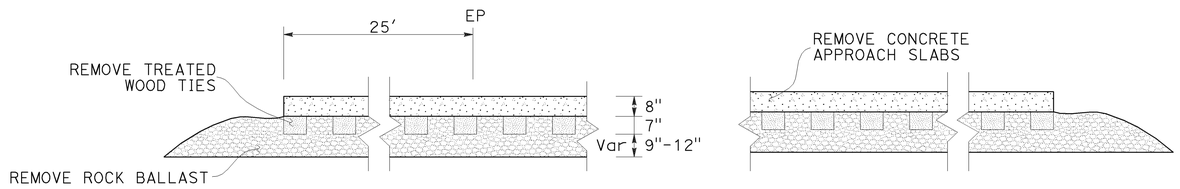

B-B

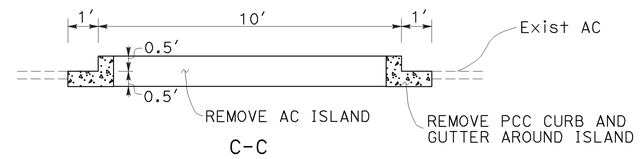

C-C

REMOVE RAILROAD CROSSING DETAIL

PM 15.15

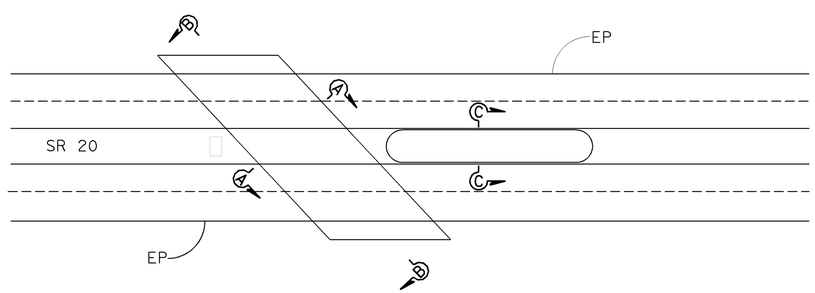

PLAN VIEW

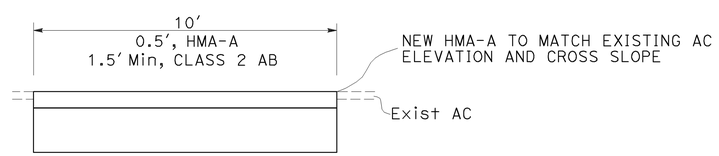

A-A

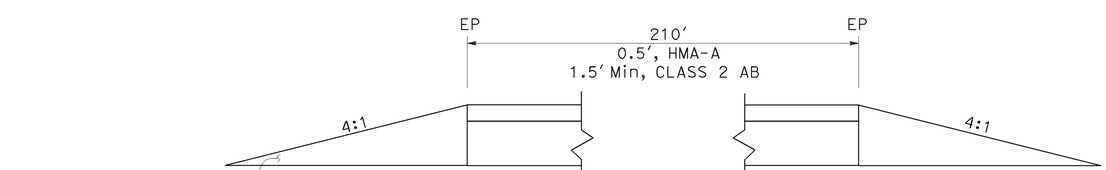

B-B

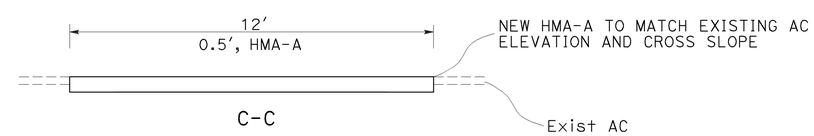

C-C

REBUILD ROADWAY AT RAILROAD CROSSING DETAIL

PM 15.15

CONSTRUCTION DETAILS

NO SCALE

C-2

STATE OF CALIFORNIA - DEPARTMENT OF TRANSPORTATION
Caltrans
NORTH REGION
OFFICE OF PROJECT DEVELOPMENT
TAHOE TEAM TT4

FUNCTIONAL SUPERVISOR: MASTRI ALVANDI
CALCULATED - DESIGNED BY: CHARLES WOOTEN
CHECKED BY: JOHN WELCH
REVISED BY: CW
DATE REVISED: 06-21-10

LAST REVISION 7-26-10
DATE PLOTTED => 05-AUG-2010
TIME PLOTTED => 13:46

Dist	COUNTY	ROUTE	POST MILES TOTAL PROJECT	SHEET No.	TOTAL SHEETS
03	Sut	20	11.2/17.0	7	31

John D. Welch 7-26-10
REGISTERED CIVIL ENGINEER DATE

7-26-10
PLANS APPROVAL DATE

REGISTERED PROFESSIONAL ENGINEER JOHN D. WELCH No. 58303 Exp. 6/30/12 CIVIL STATE OF CALIFORNIA

THE STATE OF CALIFORNIA OR ITS OFFICERS OR AGENTS SHALL NOT BE RESPONSIBLE FOR THE ACCURACY OR COMPLETENESS OF ELECTRONIC COPIES OF THIS PLAN SHEET.

NOTES

1. DIMENSIONS ARE Approx AND SHALL BE VERIFIED BY THE CONTRACTOR PRIOR TO CONSTRUCTION.
2. EXISTING UTILITY FACILITIES HAVE NOT BEEN PLOTTED ON THESE PLANS.

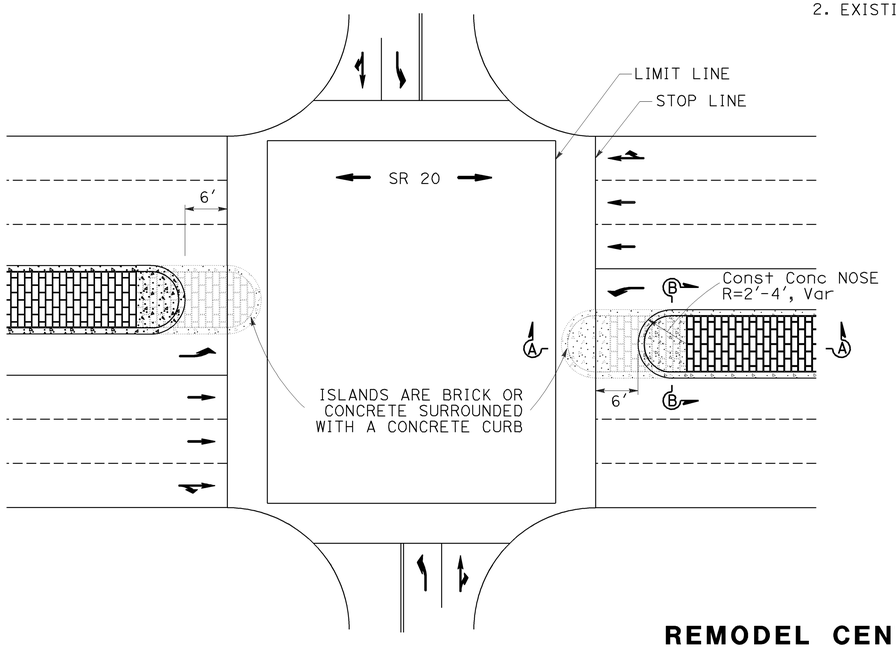

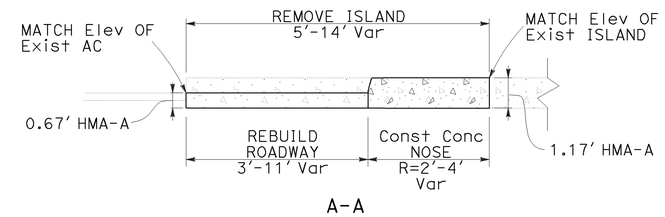

A-A

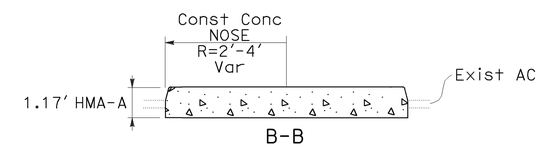

B-B

REMODEL CENTER ISLAND DETAIL

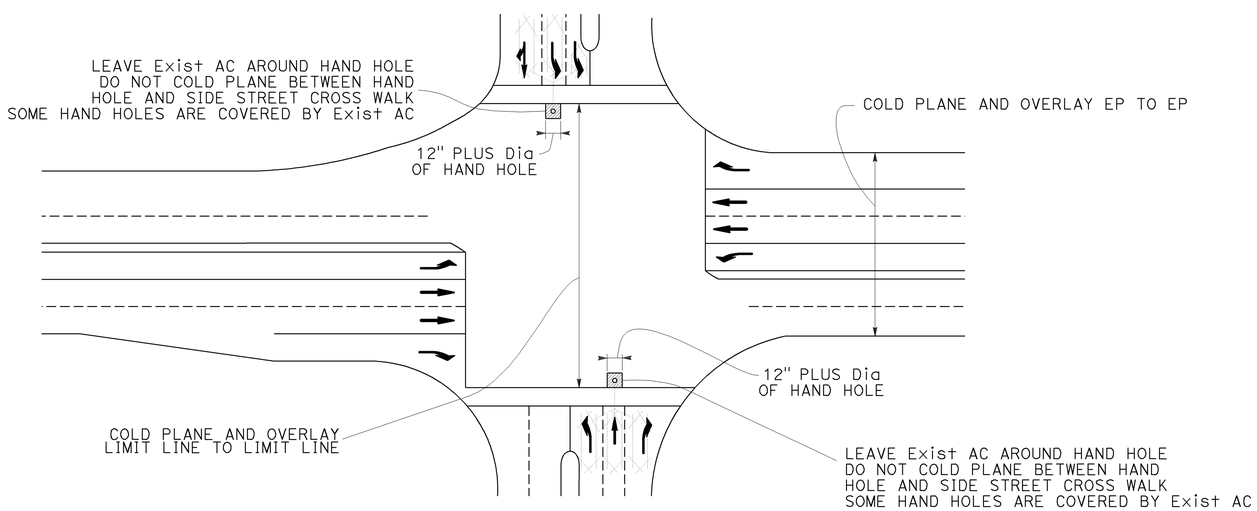

AVOID DETECTOR HAND HOLES AND EXISTING LOOPS AT CROSS STREETS

REMODEL CENTER ISLANDS INFORMATION

LOCATION ALONG Rte 20		(N) REMOVE ISLAND	(N) Conc NOSE RADIUS	(N) REBUILD ROADWAY
Approx PM	DESCRIPTION	LF	LF	LF
15.73	EAST SIDE OF ROCCA WAY	5	2	3
15.80	WEST SIDE OF GREY Ave	12	3	9
16.30	WEST SIDE OF LIVE OAK Blvd*	5	2	3
16.32	EAST SIDE OF LIVE OAK Blvd	11	4	7
16.49	WEST SIDE OF PLUMAS St	9	2	7
16.51	EAST SIDE OF PLUMAS St	14	3	11

* ADJUST ISLAND 2' BEHIND STOP LINE, NOT 6', DUE TO Exist UTILITY BOX
(N) NOT A SEPARATE PAY ITEM, FOR INFORMATION ONLY

CONSTRUCTION DETAILS

NO SCALE

C-3

STATE OF CALIFORNIA - DEPARTMENT OF TRANSPORTATION
Caltrans
NORTH REGION
OFFICE OF PROJECT DEVELOPMENT
TAHOE TEAM TT4

FUNCTIONAL SUPERVISOR: MASTRI ALVANDI
CALCULATED - DESIGNED BY: CHARLES WOOTEN
CHECKED BY: JOHN WELCH
REVISED BY: CW
DATE REVISED: 06-21-10

LAST REVISION 7-26-10
DATE PLOTTED => 05-AUG-2010
TIME PLOTTED => 13:46

Dist	COUNTY	ROUTE	POST MILES TOTAL PROJECT	SHEET No.	TOTAL SHEETS
03	Sut	20	11.2/17	8	31

REGISTERED CIVIL ENGINEER 7-26-10 DATE

7-26-10
PLANS APPROVAL DATE

REGISTERED PROFESSIONAL ENGINEER JAMES PHILIPP No. C59614 Exp. 12-31-11 CIVIL STATE OF CALIFORNIA

THE STATE OF CALIFORNIA OR ITS OFFICERS OR AGENTS SHALL NOT BE RESPONSIBLE FOR THE ACCURACY OR COMPLETENESS OF SCANNED COPIES OF THIS PLAN SHEET.

NOTE:
1. FOR DETAILS NOT SHOWN ON TYPE G1 DI SEE Std PLAN D73
2. ELEVATIONS ARE ESTIMATED FROM HISTORIC PROJECTS, NO SURVEY WAS DONE FOR THIS PROJECT.

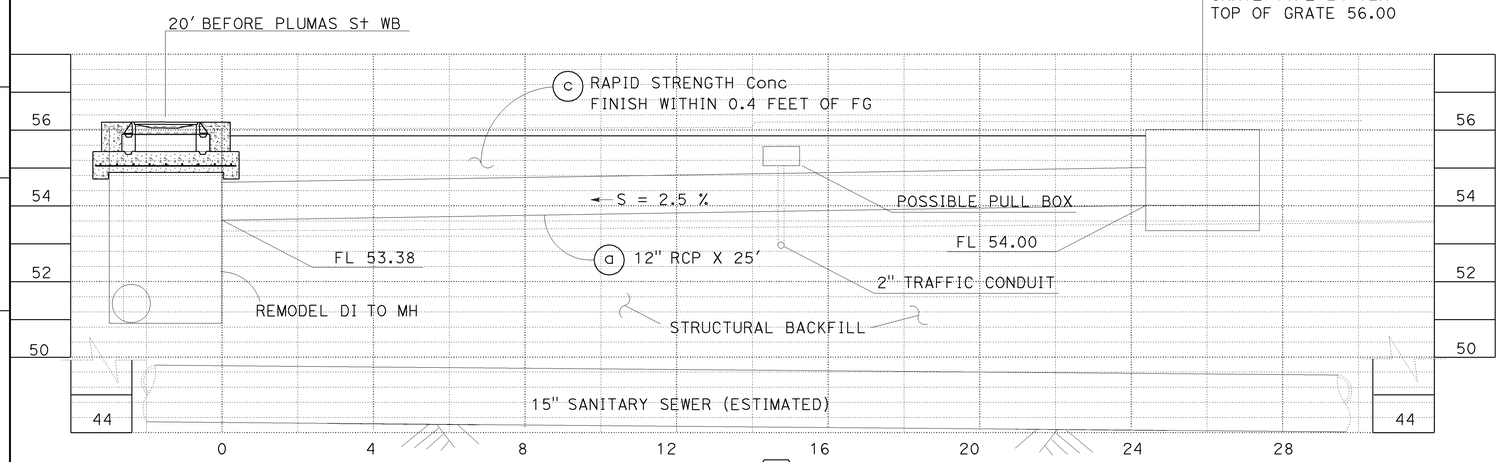

DRAINAGE SYSTEM 1

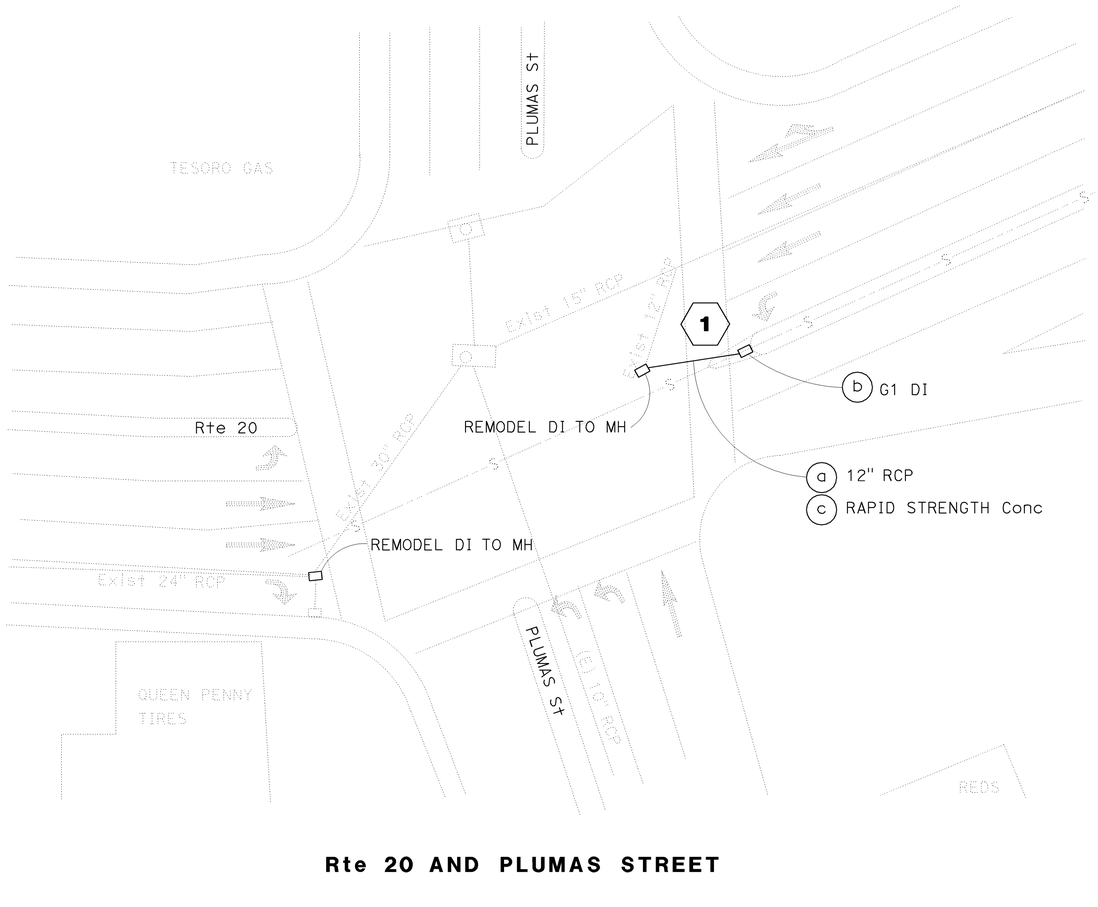

Rte 20 AND PLUMAS STREET

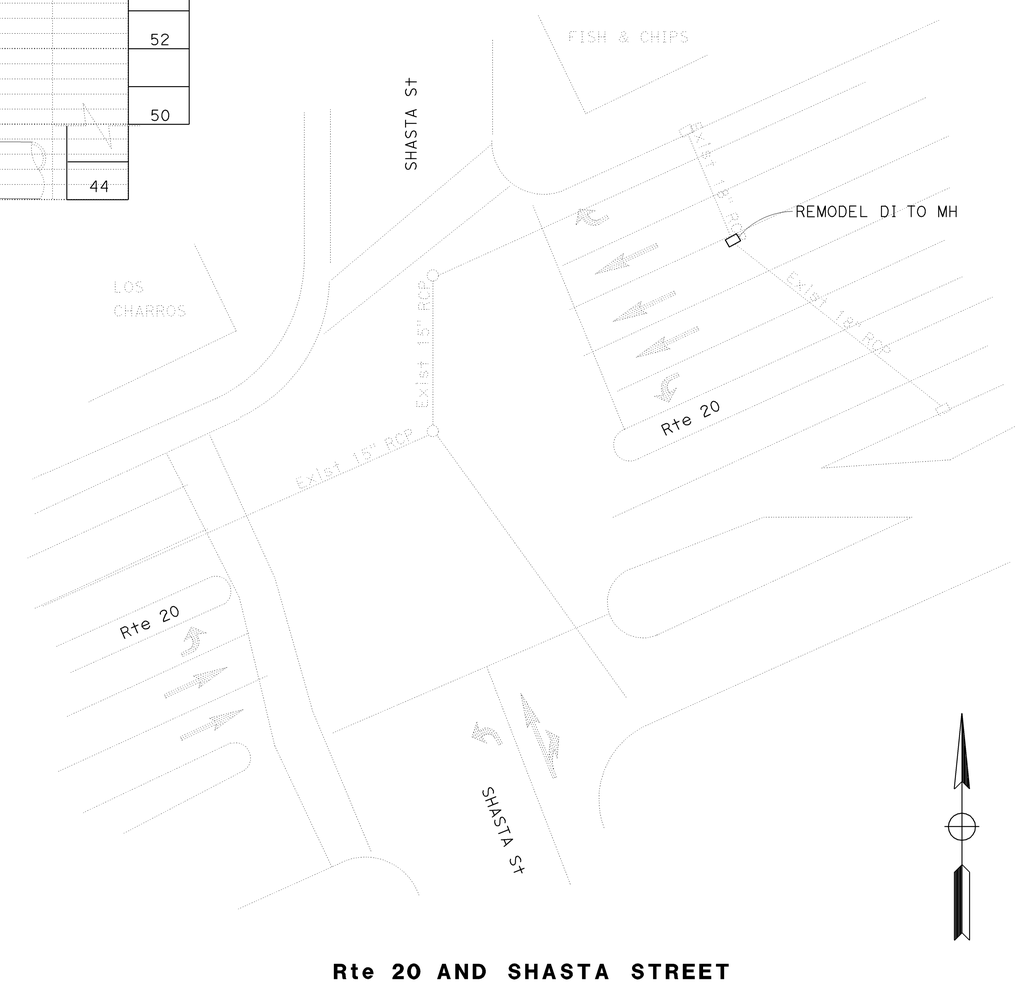

Rte 20 AND SHASTA STREET

THIS PLAN ACCURATE FOR DRAINAGE WORK ONLY

DRAINAGE PLAN/PROFILE

SCALE 1" = 20'

D-1

STATE OF CALIFORNIA - DEPARTMENT OF TRANSPORTATION
PROJECT DEVELOPMENT HYDRAULICS
Caltrans

FUNCTIONAL SUPERVISOR: DENNIS JAGODA
CALCULATED-DESIGNED BY: JAMES PHILIPP
CHECKED BY
REVISED BY
DATE REVISED

LAST REVISION 7-26-10
DATE PLOTTED => 05-AUG-2010
TIME PLOTTED => 13:46

Dist	COUNTY	ROUTE	POST MILES TOTAL PROJECT	SHEET No.	TOTAL SHEETS
03	Sut	20	11.2/17	9	31

REGISTERED CIVIL ENGINEER 7-26-10 DATE

7-26-10
PLANS APPROVAL DATE

REGISTERED PROFESSIONAL ENGINEER JAMES PHILIPP No. C59614 Exp. 12-31-11 CIVIL STATE OF CALIFORNIA

THE STATE OF CALIFORNIA OR ITS OFFICERS OR AGENTS SHALL NOT BE RESPONSIBLE FOR THE ACCURACY OR COMPLETENESS OF SCANNED COPIES OF THIS PLAN SHEET.

NOTES:
1. FOR REMODEL HAND & MAN HOLE USE EXISTING FRAME AND COVER
2. SEE TABLE ON SHEET DQ-1 FOR GENERAL LOCATIONS AND QUANTITIES.

LEGEND:
REBAR = REINFORCEMENT BAR

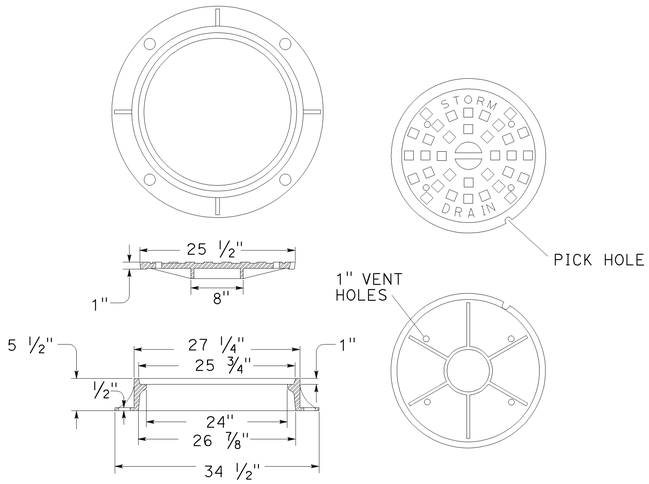

SD F & C

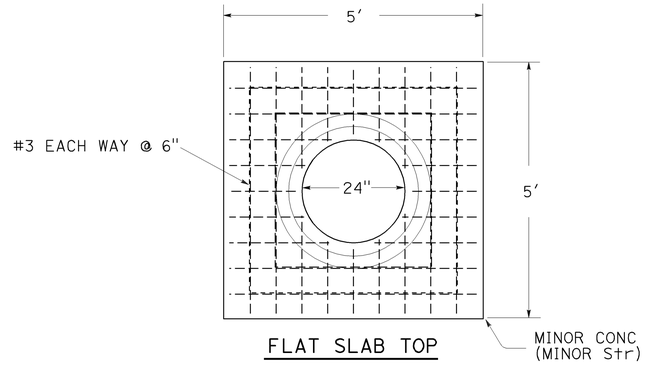

FLAT SLAB TOP

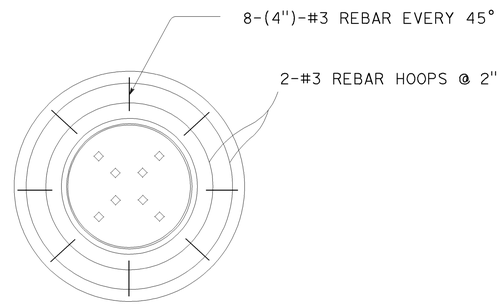

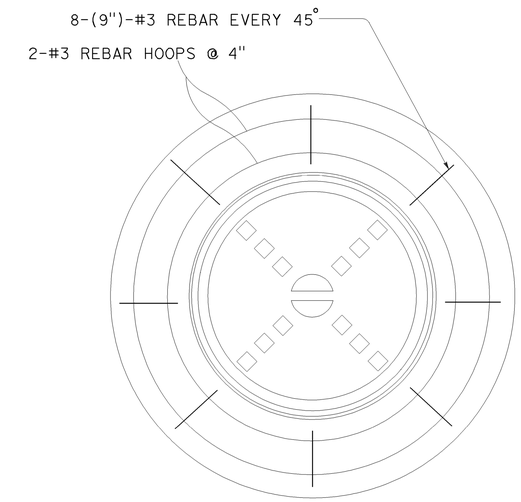

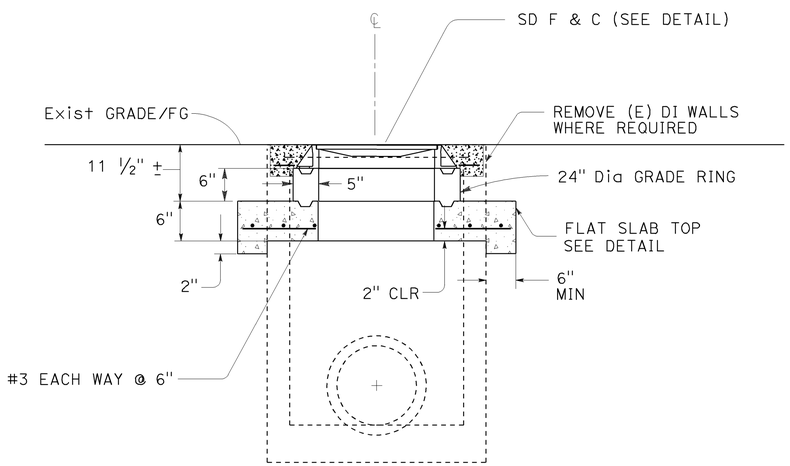

REMODEL DI TO MH - PLUMAS & SHASTA

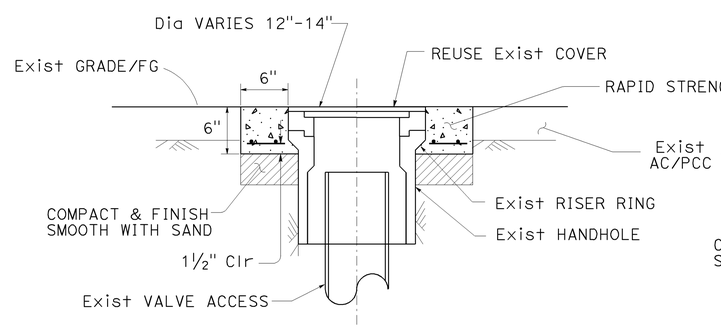

REMODEL UTILITY HAND HOLE

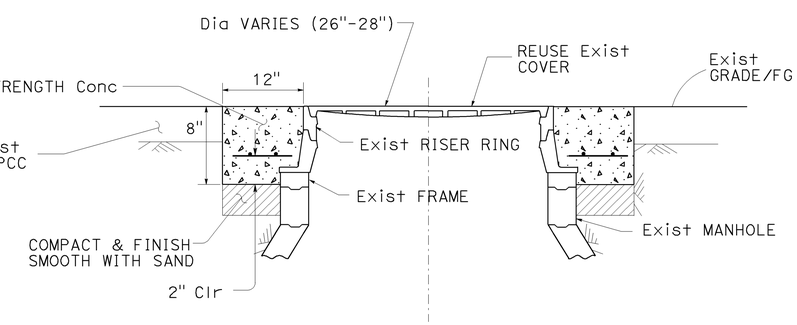

REMODEL UTILITY MAN HOLE

DRAINAGE DETAILS

NO SCALE

DD-1

STATE OF CALIFORNIA - DEPARTMENT OF TRANSPORTATION
PROJECT DEVELOPMENT HYDRAULICS
Caltrans

FUNCTIONAL SUPERVISOR: DENNIS JAGODA
CALCULATED-DESIGNED BY: JAMES PHILIPP
CHECKED BY
REVISED BY
DATE REVISED

LAST REVISION 7-26-10
DATE PLOTTED => 05-AUG-2010
TIME PLOTTED => 13:46

Dist	COUNTY	ROUTE	POST MILES TOTAL PROJECT	SHEET No.	TOTAL SHEETS
03	Sut	20	11.2/17	10	31

REGISTERED CIVIL ENGINEER 7-26-10 DATE

7-26-10
PLANS APPROVAL DATE

REGISTERED PROFESSIONAL ENGINEER
JAMES PHILIPP
No. C59614
Exp. 12-31-11
CIVIL
STATE OF CALIFORNIA

THE STATE OF CALIFORNIA OR ITS OFFICERS OR AGENTS SHALL NOT BE RESPONSIBLE FOR THE ACCURACY OR COMPLETENESS OF SCANNED COPIES OF THIS PLAN SHEET.

NOTE: ALL LOCATIONS ARE RELATIVE TO INTERSECTING St IN GIVEN DIRECTION BEFORE (B) OR AFTER (A)

LEGEND:
- CT = CALTRANS
- CYC = CITY OF YUBA CITY
- PG&E = PACIFIC GAS AND ELECTRIC
- PB = PACIFIC BELL OR ATT
- HH = HAND HOLE
- SS = SANITARY SEWER

EASTBOUND UTILITIES

Dist IN Ft BEFORE (B) - AFTER (A) INTERSECTION	INTERSECTION	DESCRIPTION/OWNER	(N) RAPID STRENGTH Conc	(N) MINOR CONCRETE (MINOR STRUCTURE)	Misc IRON AND STEEL	(N) BAR REINFORCEMENT STEEL	REMODEL HAND HOLE	REMODEL MANHOLE	REMODEL DI TO MH	DI (TYPE G1)	12" RCP
			CY	CY	LB	LB	EA	EA	EA	EA	LF
13-B	STABLER/WALTON	HH DETECTOR / CT	0.05			4.5	1				
8-B	STABLER/WALTON	MH SS / CYC	0.25			10		1			
7-A	STABLER/WALTON	HH (MONUMENT) / CT	0.05			4.5	1				
12-A	STABLER/WALTON	HH DETECTOR / CT	0.05			4.5	1				
23-A	STABLER/WALTON	MH SS / CYC	0.25			10		1			
29-A	STABLER/WALTON	MH SD / CT	0.25			10		1			
21-B	CIVIC CENTER Blvd	MH SD / CT	0.25			10		1			
10-A	CIVIC CENTER Blvd	MH / CT	0.25			10		1			
24-A	CIVIC CENTER Blvd	HH DETECTOR "LOOPS" / CT	0.05			4.5	1				
CTR	STAFFORD WAY	MH / CT	0.25			10		1			
CTR	CLARK Ave	MH / CT	0.25			10		1			
14-A	CLARK Ave	MH SS / CYC	0.25			10		1			
127-B	COOPER Ave	MH / CT	0.25			10		1			
14.5-B	ORANGE STREET	HH WATER / CYC	0.05			4.5	1				
5-B	ORANGE STREET	MH SS / CYC	0.25			10		1			
46-B	OLIVE St/LIVE OAK	HH WATER / CYC	0.05			4.5	1				
14-B	OLIVE St/LIVE OAK	HH GAS / PG&E	0.05			4.5	1				
20-A	OLIVE St/LIVE OAK	MH / CT	0.25			10		1			
37-A	OLIVE St/LIVE OAK	MH / CT	0.25			10		1			
119-A	OLIVE St/LIVE OAK	MH / CT	0.25			10		1			
34-B	CHESTNUT STREET	MH SS / CYC	0.25			10		1			
37-B	ALMOND STREET	MH / PG&E	0.25			10		1			
30-B	ALMOND STREET	MH SS / CYC	0.25			10		1			
46-A	ALMOND STREET	MH SS / CYC	0.25			10		1			
143-B	PLUMAS STREET	MH SS / CYC	0.25			10		1			
140-B	PLUMAS STREET	MH SS / CYC	0.25			10		1			
64-B	PLUMAS STREET	DI 3'X3' REMODEL TO MH / CT	0.25	0.50	300	24		1	1		
		EB SUBTOTAL	5.35	0.50	300	246	7	20	1		

(N) NOT A SEPARATE PAY ITEM, FOR INFORMATION ONLY

WESTBOUND UTILITIES

Dist IN Ft BEFORE (B) - AFTER (A) INTERSECTION	INTERSECTION	DESCRIPTION/OWNER	(N) RAPID STRENGTH Conc	(N) MINOR CONCRETE (MINOR STRUCTURE)	Misc IRON AND STEEL	(N) BAR REINFORCEMENT STEEL	REMODEL HAND HOLE	REMODEL MANHOLE	REMODEL DI TO MH	DI (TYPE G1)	12" RCP
			CY	CY	LB	LB	EA	EA	EA	EA	LF
86-B	SHASTA STREET	HH SS / CYC	0.05			4.5	1				
74-B	SHASTA STREET	DI 3'X3' REMODEL TO MH / CT	0.25	0.50	300	24		1	1		
CTR	SHASTA STREET	MH SD / CYC	0.25			10		1			
15-A	SHASTA STREET	MH SD / CT	0.25			10		1			
34-A	SHASTA STREET	MH / PB	0.25			10		1			
45-B	PLUMAS STREET	TYPE G1 DI		0.65	239					1	
45/18-B	PLUMAS STREET	12" RCP & Conc BACKFILL	3.00								25
20-B	PLUMAS STREET	DI 3'X3' REMODEL TO MH / CT	0.25	0.50	300	24		1	1		
17-B	PLUMAS STREET	MH / PB	0.25			10		1			
18-A	PLUMAS STREET	MH SD / CYC	0.25			10		1			
26-A	PLUMAS STREET	MH SD / CYC	0.25			10		1			
34-A	CHESTNUT STREET	MH / PB	0.25			10		1			
169-B	ORANGE STREET	MH / PB	0.25			10		1			
8-A	CLARK Ave	MH / CT	0.25			10		1			
CTR	GRAY Ave	MH SS / CYC	0.25			10		1			
62-B	SR-99 Conc AREA	MH / PB	0.25			10		1			
244-A	SR-99 Conc AREA	MH SD / CT	0.25			10		1			
321-B	CIVIC CENTER Blvd	HH / CT	0.05			4.5	1				
CTR	CIVIC CENTER Blvd	MH SS / CYC	0.25			10		1			
14-A	CIVIC CENTER Blvd	MH SS / CYC	0.25			10		1			
1239-B	STABLER L/WALTON	MH SS / CYC	0.25			10		1			
835-B	STABLER L/WALTON	MH SS / CYC	0.25			10		1			
5-B	STABLER L/WALTON	HH / CYC	0.05			4.5	1				
355-B	THARP Rd	HH DETECTOR / CT	0.05			4.5	1				
193-B	THARP Rd	HH DETECTOR / CT	0.05			4.5	1				
		WB SUBTOTAL	7.75	1.65	839	231	5	18	2	1	25
		EB SUBTOTAL	5.35	0.50	300	246	7	20	1		
		TOTAL	13.10	2.15	1139	477	12	38	3	1	25

DRAINAGE QUANTITIES

DQ-1

STATE OF CALIFORNIA - DEPARTMENT OF TRANSPORTATION
PROJECT DEVELOPMENT HYDRAULICS
Caltrans

FUNCTIONAL SUPERVISOR: DENNIS JAGODA
CALCULATED-DESIGNED BY: JAMES PHILIPP
CHECKED BY
REVISED BY
DATE REVISED

LAST REVISION 7-26-10
DATE PLOTTED => 05-AUG-2010
TIME PLOTTED => 13:46

Dist	COUNTY	ROUTE	POST MILES TOTAL PROJECT	SHEET No.	TOTAL SHEETS
03	Sut	20	11.2/17.0		

John R. Keber 7-26-10
REGISTERED CIVIL ENGINEER DATE

7-26-10
PLANS APPROVAL DATE

REGISTERED PROFESSIONAL ENGINEER
John R. Keber
No. 40048
Exp. 12-31-11
CIVIL
STATE OF CALIFORNIA

THE STATE OF CALIFORNIA OR ITS OFFICERS OR AGENTS SHALL NOT BE RESPONSIBLE FOR THE ACCURACY OR COMPLETENESS OF ELECTRONIC COPIES OF THIS PLAN SHEET.

STATIONARY MOUNTED CONSTRUCTION AREA SIGNS

SIGN LETTER	SIGN CODE FEDERAL	SIGN CODE CALIFORNIA	PANEL SIZE	SIGN MESSAGE	NUMBER OF POST AND SIZE	NUMBER OF SIGNS
A	W20-1	C23	48" x 48"	ROAD WORK AHEAD	1 - 6" x 6"	44
B	G20-2	C14	36" x 18"	END ROAD WORK	1 - 4" x 4"	40
C	G20-1[Spec](6)		60" x 30"	ROAD WORK NEXT 6 MILES	2 - 4" x 6"	2
D		C40(Mod)	72" x 42"	TRAFFIC FINES DOUBLED IN WORK ZONES	2 - 4" x 6"	2

NOTE: EXACT SIGN LOCATIONS TO BE DETERMINED BY THE ENGINEER.

SIGN DETAILS

(C) G20-1[Spec](6)

ROAD WORK
NEXT 6 MILES

60"x30"

6" C SERIES LETTERS

RETROREFLECTIVE ORANGE BACKGROUND WITH BLACK LEGEND AND BORDER.

(D) C40(Mod)<CA>

TRAFFIC FINES
DOUBLED IN
WORK ZONES

72"x42"

6" D SERIES LETTERS

RETROREFLECTIVE WHITE BACKGROUND WITH BLACK LEGEND AND BORDER.

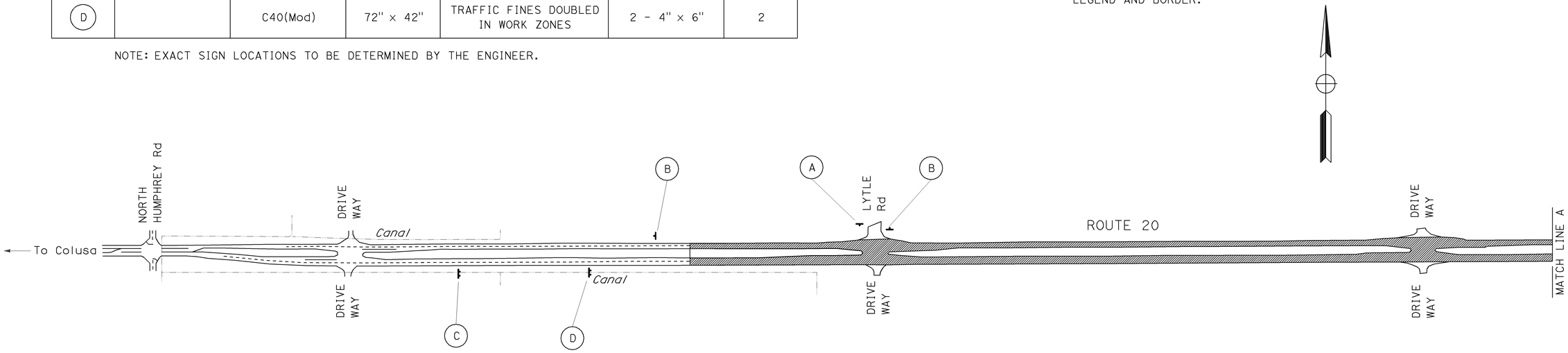

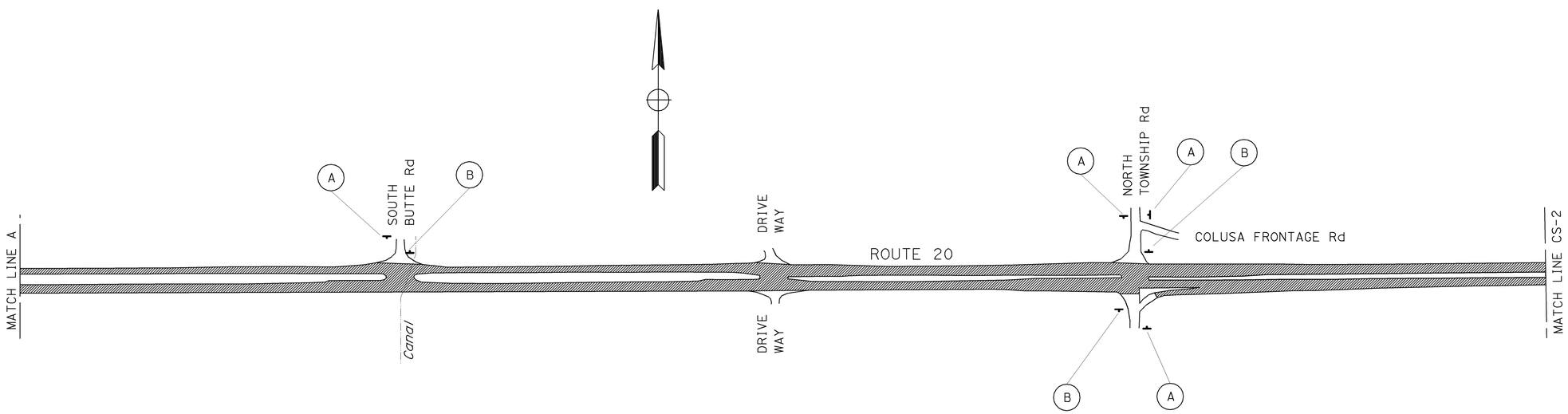

CONSTRUCTION AREA SIGNS

NO SCALE

NOTE: THIS PLAN ACCURATE FOR CONSTRUCTION AREA SIGN WORK ONLY.

CS-1

REVISED BY	DATE REVISED
CHUCK COOK	JOHN KEBER
CALCULATED-DESIGNED BY	CHECKED BY
FUNCTIONAL SUPERVISOR	JOSEPH W. HORTON

STATE OF CALIFORNIA - DEPARTMENT OF TRANSPORTATION
Caltrans
TRAFFIC

\\S\03s01\cadd\proj4\03\1f4701\drafting\31f4701a001.dgn

LAST REVISION 7-26-10
DATE PLOTTED => 05-AUG-2010
TIME PLOTTED => 13:46

Dist	COUNTY	ROUTE	POST MILES TOTAL PROJECT	SHEET No.	TOTAL SHEETS
03	Sut	20	11.2/17.0	12	31

REGISTERED CIVIL ENGINEER 7-26-10 DATE

7-26-10
PLANS APPROVAL DATE

REGISTERED PROFESSIONAL ENGINEER
John R. Keber
No. 40048
Exp. 12-31-11
CIVIL
STATE OF CALIFORNIA

THE STATE OF CALIFORNIA OR ITS OFFICERS OR AGENTS SHALL NOT BE RESPONSIBLE FOR THE ACCURACY OR COMPLETENESS OF ELECTRONIC COPIES OF THIS PLAN SHEET.

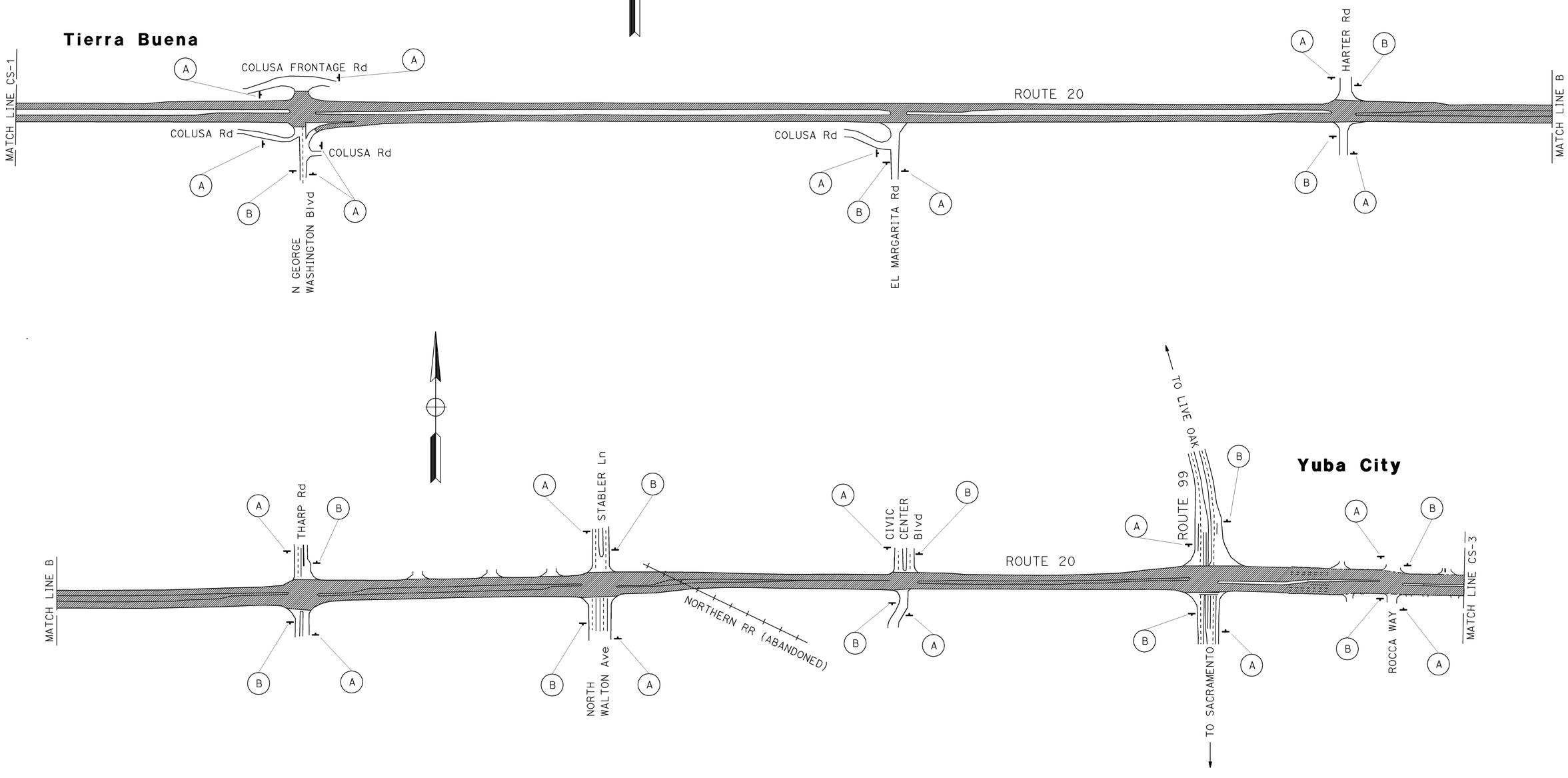

CONSTRUCTION AREA SIGNS

NO SCALE

NOTE: THIS PLAN ACCURATE FOR CONSTRUCTION AREA SIGN WORK ONLY.

CS-2

STATE OF CALIFORNIA - DEPARTMENT OF TRANSPORTATION
Caltrans
TRAFFIC

FUNCTIONAL SUPERVISOR: JOSEPH W. HORTON
CALCULATED-DESIGNED BY: JOHN KEBER
CHECKED BY: CHUCK COOK
REVISED BY
DATE REVISED

\\Sv03s01\cadd\proj4\03\1f470\drafting\31F4701a002.dgn

LAST REVISION 7-26-10
DATE PLOTTED => 05-AUG-2010
TIME PLOTTED => 13:46

Dist	COUNTY	ROUTE	POST MILES TOTAL PROJECT	SHEET No.	TOTAL SHEETS
03	Sut	20	11.2/17.0	13	31

REGISTERED CIVIL ENGINEER 7-26-10 DATE

7-26-10
PLANS APPROVAL DATE

REGISTERED PROFESSIONAL ENGINEER
John R. Keber
No. 40048
Exp. 12-31-11
CIVIL
STATE OF CALIFORNIA

THE STATE OF CALIFORNIA OR ITS OFFICERS OR AGENTS SHALL NOT BE RESPONSIBLE FOR THE ACCURACY OR COMPLETENESS OF ELECTRONIC COPIES OF THIS PLAN SHEET.

YUBA CITY

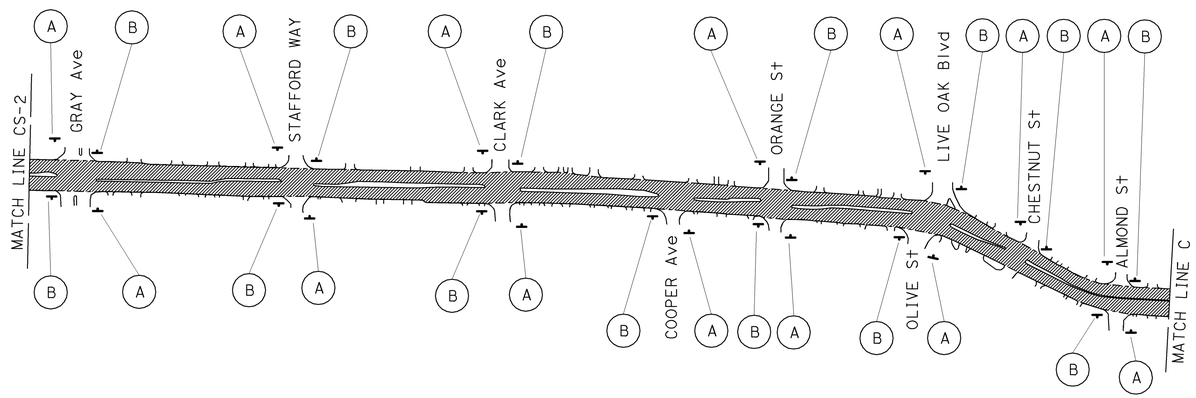

MARYSVILLE

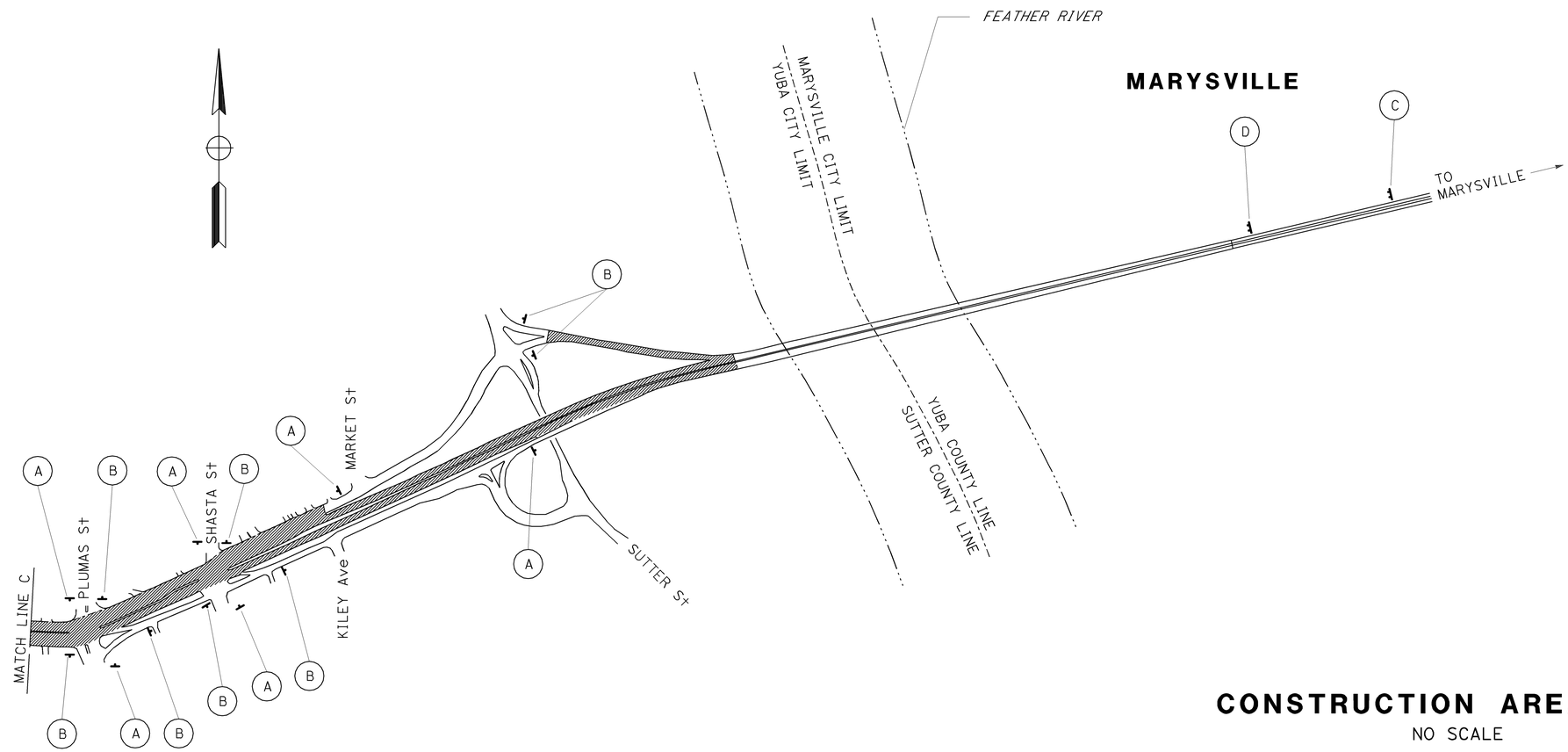

CONSTRUCTION AREA SIGNS

NO SCALE

NOTE: THIS PLAN ACCURATE FOR CONSTRUCTION AREA SIGN WORK ONLY.

CS-3

LAST REVISION 7-26-10

REVISED BY	DATE REVISED
CHUCK COOK	JOHN KEBER

CALCULATED-DESIGNED BY	CHECKED BY

FUNCTIONAL SUPERVISOR: JOSEPH W. HORTON

STATE OF CALIFORNIA - DEPARTMENT OF TRANSPORTATION

Caltrans®

TRAFFIC

\\Sv03s01\cadd\proj4\03\1F4701\drafting\31F4701a003.dgn

Dist	COUNTY	ROUTE	POST MILES TOTAL PROJECT	SHEET No.	TOTAL SHEETS
03	Sut	20	11.2/17.0	14	31

John R. Keber 7-26-10
REGISTERED CIVIL ENGINEER DATE

7-26-10
PLANS APPROVAL DATE

REGISTERED PROFESSIONAL ENGINEER John R. Keber No. 40048 Exp. 12-31-11 CIVIL STATE OF CALIFORNIA

THE STATE OF CALIFORNIA OR ITS OFFICERS OR AGENTS SHALL NOT BE RESPONSIBLE FOR THE ACCURACY OR COMPLETENESS OF ELECTRONIC COPIES OF THIS PLAN SHEET.

4" THERMOPLASTIC TRAFFIC STRIPE

DETAIL NUMBER	LINEAR FEET
22	10,142
25	40,111
25A	500
27B	46,653
32	4,771
TOTAL	102,177

4" THERMOPLASTIC TRAFFIC STRIPE (BROKEN 36 - 12)

DETAIL NUMBER	LINEAR FEET
12	44,991
32	4,771
TOTAL	49,762

4" THERMOPLASTIC TRAFFIC STRIPE (BROKEN 17 - 7)

DETAIL NUMBER	LINEAR FEET
8	1,847
9	20,757
TOTAL	22,604

8" THERMOPLASTIC TRAFFIC STRIPE

DETAIL NUMBER	LINEAR FEET
36	140
36A	295
38	14,606
TOTAL	15,041

4" THERMOPLASTIC TRAFFIC STRIPE (BROKEN 6 - 1)

DETAIL NUMBER	LINEAR FEET
40	1,550
TOTAL	1,550

4" THERMOPLASTIC TRAFFIC STRIPE (BROKEN 12 - 3)

DETAIL NUMBER	LINEAR FEET
27C	1,271
TOTAL	1,271

8" THERMOPLASTIC TRAFFIC STRIPE (BROKEN 12 - 3)

DETAIL NUMBER	LINEAR FEET
37B	1,547
TOTAL	1,547

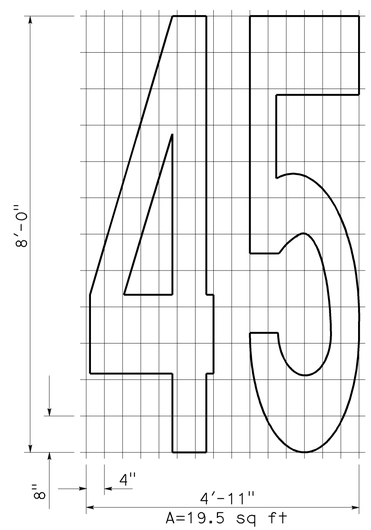

NUMERALS

OBJECT MARKER

LOCATION	OBJECT MARKER TYPE K-1 (EACH)
ROCCA Way	2
GRAY Ave	2
LIVE OAK Blvd	2
PLUMAS St	2
TOTAL	8

PAVEMENT MARKER

DETAIL NUMBER	RETROREFLECTIVE		
	TYPE D	TYPE G	TYPE H
	EACH	EACH	EACH
9		435	
12		939	
22	446		
25			840
25A			22
32	255		
36		7	
36A		14	
37B		77	
38		613	
SUBTOTAL	701	2,085	862
TOTAL	3,648		

THERMOPLASTIC PAVEMENT MARKING

DESCRIPTION	NUMBER	SQUARE FEET
TYPE I (24') ARROW	18	558
TYPE II ARROW	8	360
TYPE III ARROW	112	4,704
TYPE V ARROW	89	2,937
"SIGNAL"	12	384
"STOP"	1	22
"AHEAD"	12	372
"35"	2	33
"45"	2	39
12" YELLOW DIAGONAL	5	60
12" WHITE CHEVRON	4	30
CROSSWALK	43	7,392
LIMIT LINE	18	773
TOTAL		17,664

PAVEMENT DELINEATION QUANTITIES

PDQ-1

REVISED BY | DATE REVISED
CHUCK COOK | JOHN KEBER
CALCULATED-DESIGNED BY | CHECKED BY
FUNCTIONAL SUPERVISOR
JOSEPH W. HORTON

STATE OF CALIFORNIA - DEPARTMENT OF TRANSPORTATION
Caltrans
TRAFFIC

\\Sv03s01\cadd\proj4\03\1f470\drafting\31F470nc001.dgn

LAST REVISION 7-26-10
DATE PLOTTED => 05-AUG-2010
TIME PLOTTED => 13:46

Dist	COUNTY	ROUTE	POST MILES TOTAL PROJECT	SHEET No.	TOTAL SHEETS
03	Sut	20	11.2/17.0	15	31

REGISTERED CIVIL ENGINEER — DATE 7-26-10

PLANS APPROVAL DATE 7-26-10

REGISTERED PROFESSIONAL ENGINEER — John R. Keber No. 40048 Exp. 12-31-11 CIVIL — STATE OF CALIFORNIA

THE STATE OF CALIFORNIA OR ITS OFFICERS OR AGENTS SHALL NOT BE RESPONSIBLE FOR THE ACCURACY OR COMPLETENESS OF ELECTRONIC COPIES OF THIS PLAN SHEET.

LEGEND

(Sht-No.)	ROADSIDE SIGN NUMBER
(No.)	OVERHEAD SIGN NUMBER
<CA>	CALIFORNIA SIGN CODE
⊣	SIGN - SINGLE POST
⊣⊣	SIGN - TWO POST
■	REMOVE ROADSIDE SIGN
*	RELOCATE ROADSIDE SIGN

NOTES:

1. ALL EXISTING SIGNS NOT SHOWN FOR REMOVAL SHALL REMAIN IN PLACE.
2. ALL SIGN CODES SHOWN ARE FEDERAL SIGN CODES UNLESS OTHERWISE DESIGNATED AS CALIFORNIA SIGN CODES.
3. THIS PLAN ACCURATE FOR SIGNING WORK ONLY.

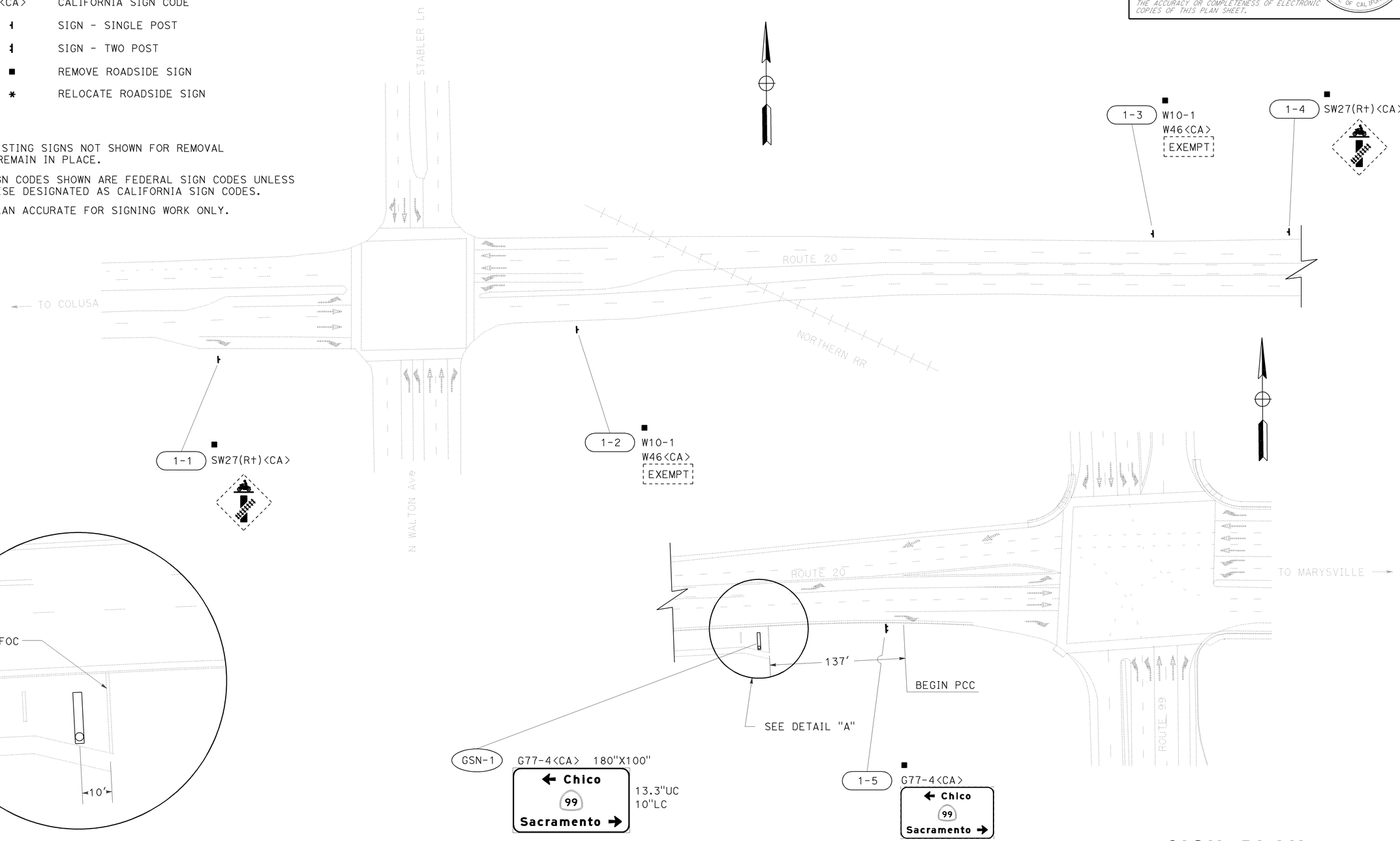

DETAIL "A"
NO SCALE

OVERHEAD SIGN STRUCTURE

SIGN PLAN
NO SCALE

S-1

REVISED BY	DATE REVISED
CHUCK COOK	JOHN KEBER
CALCULATED-DESIGNED BY	CHECKED BY
FUNCTIONAL SUPERVISOR	JOSEPH W. HORTON

STATE OF CALIFORNIA - DEPARTMENT OF TRANSPORTATION — TRAFFIC — Caltrans

\\Sv03s01\cadd\proj4\03\1f470\drafting\31f470oa001.dgn

LAST REVISION 7-26-10 — DATE PLOTTED => 05-AUG-2010 — TIME PLOTTED => 13:46

Dist	COUNTY	ROUTE	POST MILES TOTAL PROJECT	SHEET No.	TOTAL SHEETS
03	Sut	20	11.2/17.0	16	31

REGISTERED CIVIL ENGINEER DATE 7-26-10

7-26-10
PLANS APPROVAL DATE

REGISTERED PROFESSIONAL ENGINEER
John R. Keber
No. 40048
Exp. 12-31-11
CIVIL
STATE OF CALIFORNIA

THE STATE OF CALIFORNIA OR ITS OFFICERS OR AGENTS SHALL NOT BE RESPONSIBLE FOR THE ACCURACY OR COMPLETENESS OF ELECTRONIC COPIES OF THIS PLAN SHEET.

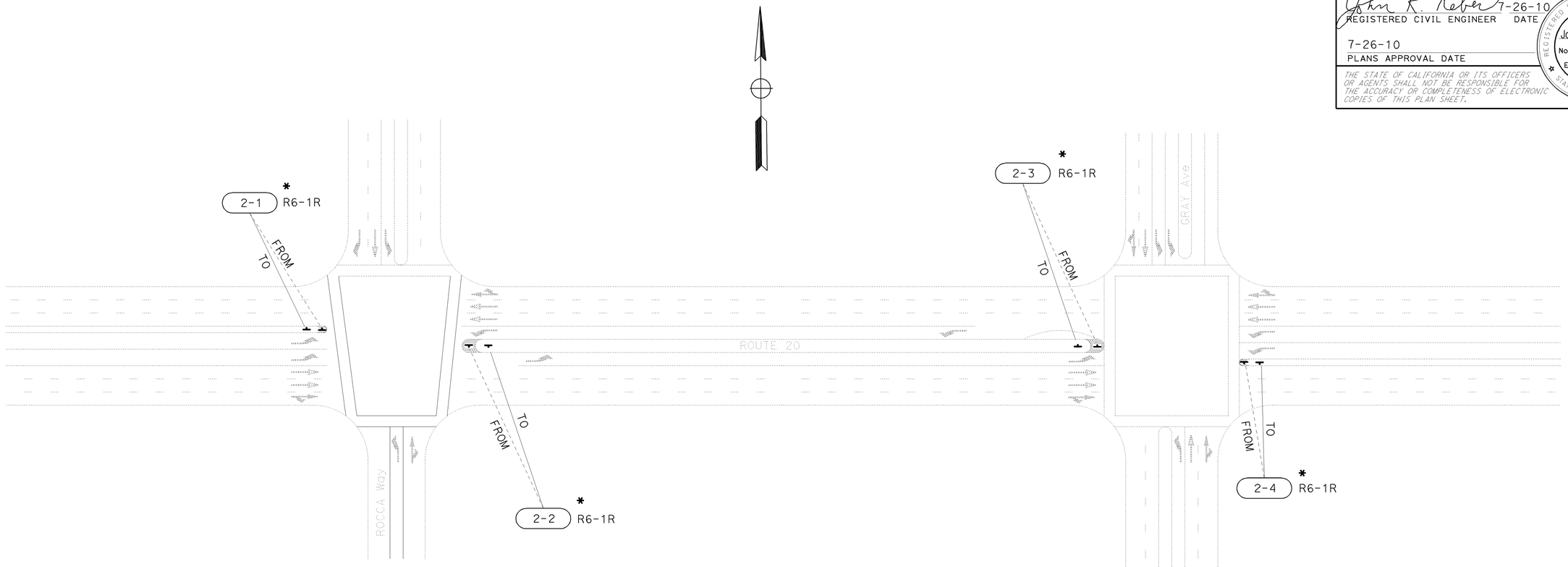

ROADSIDE SIGN QUANTITIES

SIGN NUMBER (Sht-No.)	SIGN CODE FEDERAL	SIGN CODE CALIFORNIA	REMOVE ROADSIDE SIGN (EACH)	RELOCATE ROADSIDE SIGN (EACH)
1-1		SW27(Rt)	1	
1-2	W10-1	W47 W46	1	
1-3	W10-1	W47 W46	1	
1-4		SW27(Rt)	1	
1-5		G77-4	1	
2-1	R6-1R	R10(Rt)		1
2-2	R6-1R	R10(Rt)		1
2-3	R6-1R	R10(Rt)		1
2-4	R6-1R	R10(Rt)		1
TOTAL			5	4

SIGN PLAN

NO SCALE

S-2

REVISED BY	DATE REVISED
CHUCK COOK	JOHN KEBER
CALCULATED-DESIGNED BY	CHECKED BY
FUNCTIONAL SUPERVISOR	JOSEPH W. HORTON

STATE OF CALIFORNIA - DEPARTMENT OF TRANSPORTATION
Caltrans
TRAFFIC

\\Sv03s01\cadd\proj4\03\1f470\drafting\31f470oa002.dgn

LAST REVISION 7-26-10
DATE PLOTTED => 05-AUG-2010
TIME PLOTTED => 13:46

Dist	COUNTY	ROUTE	POST MILES TOTAL PROJECT	SHEET No.	TOTAL SHEETS
03	Sut	20	11.2/17.0	17	31

REGISTERED CIVIL ENGINEER 7-26-10 DATE

7-26-10
PLANS APPROVAL DATE

REGISTERED PROFESSIONAL ENGINEER John R. Keber No. 40048 Exp. 12-31-11 CIVIL STATE OF CALIFORNIA

THE STATE OF CALIFORNIA OR ITS OFFICERS OR AGENTS SHALL NOT BE RESPONSIBLE FOR THE ACCURACY OR COMPLETENESS OF ELECTRONIC COPIES OF THIS PLAN SHEET.

OVERHEAD SIGN QUANTITIES

SIGN NUMBER (No.)	FURNISH SIGN STRUCTURE (LIGHTWEIGHT)	INSTALL SIGN STRUCTURE (LIGHTWEIGHT)	36" CIDH CONCRETE PILE (SIGN FOUNDATION)
	LB	LB	LF
GSN-1	3452	3452	15
TOTAL	3452	3452	15

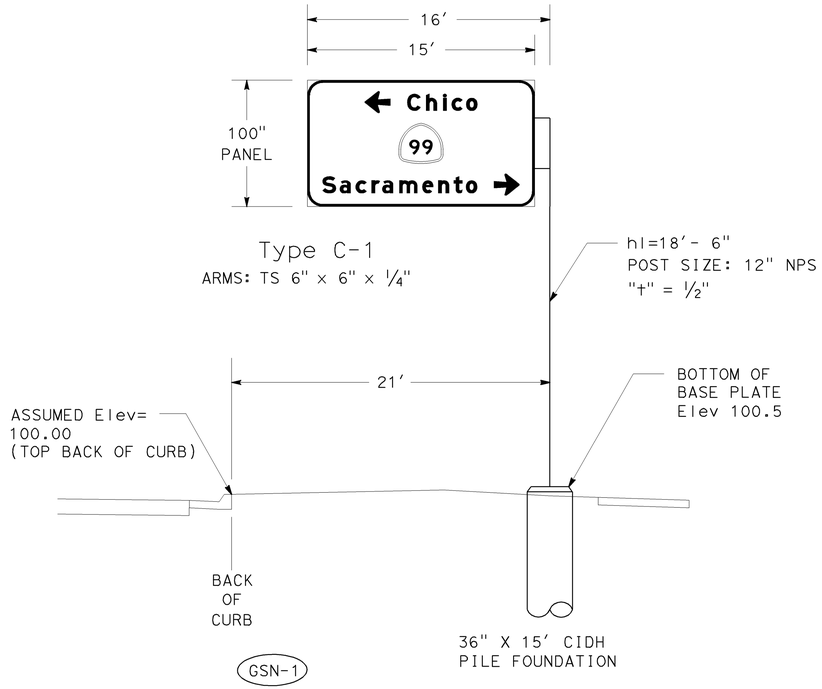

NOTES:

1. hl = DISTANCE FROM BOTTOM OF THE SIGN PANEL TO BOTTOM OF THE BASE PLATE.
2. OVERHEAD SIGN PANEL SHALL BE LAMINATED TYPE A.

NOTE: SIGN PANEL DIMENSIONS ARE IN INCHES.

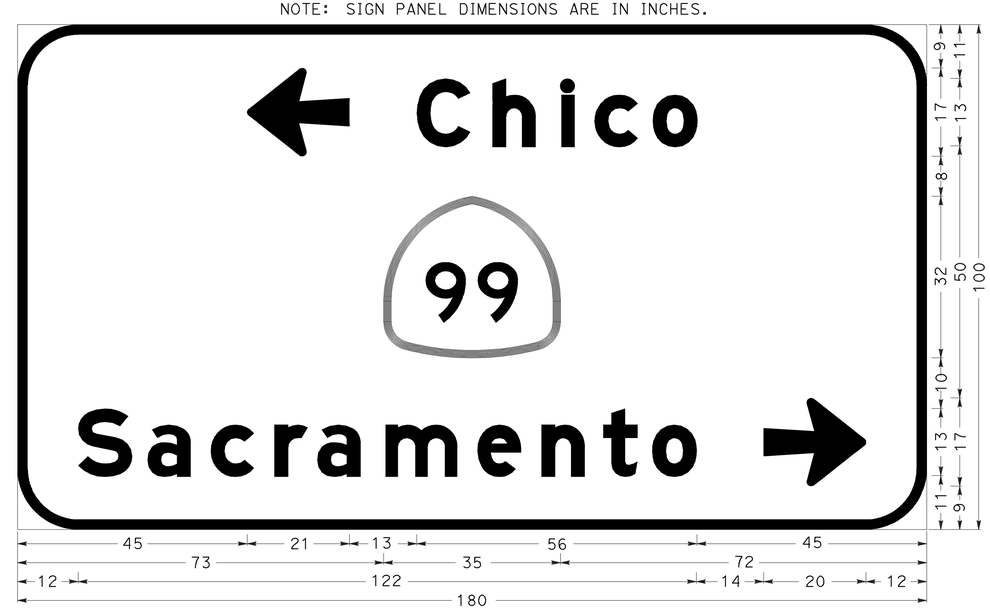

G77-4<CA>
12" RADIUS, 2" BORDER, WHITE ON GREEN:
ARROW 13.3"UC-1L 20" 180°: [Chico] E MOD: [Sacramento] E MOD: ARROW 13.3"UC-1L - 20" 0°

OVERHEAD SIGN PANEL QUANTITIES (CONTRACTOR-FURNISHED)

SIGN NUMBER (No.)	SIGN CODE	SIGN MESSAGE/DESCRIPTION	SIGN SIZE L X D (INCHES)	SIGN AREA (SQFT)	NUMBER OF SIGNS	BACKGROUND SHEETING COLOR	BACKGROUND RETROREFLECTIVE ASTM TYPE	LEGEND SHEETING COLOR	LEGEND RETROREFLECTIVE ASTM TYPE	PROTECTIVE OVERLAY PREMIUM	FURNISH LAMINATED PANEL SIGN (1"-TYPE A) SQFT
GSN-1	G77-4<CA>	1 LINE ARROW ~ Chico STATE ROUTE SHIELD (99) Sacramento ~ 1 LINE ARROW	180 x 100	125.00	1	GREEN	III	WHITE	IX	X	125.00
TOTAL											125.00

L = LENGTH OF SIGN
D = DEPTH OF SIGN

NOTE. CALIFORNIA SIGN CODES ARE DESIGNATED BY <CA>.

SIGN DETAILS AND QUANTITIES

NO SCALE

SD-1

STATE OF CALIFORNIA - DEPARTMENT OF TRANSPORTATION
TRAFFIC
Caltrans
FUNCTIONAL SUPERVISOR: JOSEPH W. HORTON
CALCULATED-DESIGNED BY: CHUCK COOK
CHECKED BY: JOHN KEBER
REVISED BY / DATE REVISED
\\Sv03s01\cadd\proj4\03\1f470\drafting\31F470ob001.dgn
LAST REVISION 7-26-10
DATE PLOTTED => 05-AUG-2010
TIME PLOTTED => 13:46

Dist	COUNTY	ROUTE	POST MILES TOTAL PROJECT	SHEET No.	TOTAL SHEETS
03	Sut	20	11.2/17.0	18	31

John D. Welch 7-26-10
REGISTERED CIVIL ENGINEER DATE

7-26-10
PLANS APPROVAL DATE

REGISTERED PROFESSIONAL ENGINEER JOHN D. WELCH No. 58303 Exp. 6/30/12 CIVIL STATE OF CALIFORNIA

THE STATE OF CALIFORNIA OR ITS OFFICERS OR AGENTS SHALL NOT BE RESPONSIBLE FOR THE ACCURACY OR COMPLETENESS OF ELECTRONIC COPIES OF THIS PLAN SHEET.

ROADWAY QUANTITIES

LOCATION ALONG Rte 20			HOT MIX ASPHALT (TYPE A)	RUBBERIZED WARM MIX ASPHALT (TYPE O)	COLD PLANE ASPHALT CONCRETE PAVEMENT (0.40 FEET MAX)	ASPHALTIC EMULSION (PAINT BINDER)	SHOULDER BACKING	CLASS 2 AGGREGATE BASE
Approx PM	DESCRIPTION	SIDE	TON	TON	SQYD	TON	TON	CY
11.2 TO 11.3	Beg Const TO LYTLE Rd	Lt/Rt	1144.9	272.6	4846.1	6.1		
11.3 TO 11.4	LYTLE Rd Jct	Lt/Rt	1351.4	321.8	5720.0	7.2		
11.4 TO 11.7	LYTLE Rd TO FRONTAGE Rd	Lt/Rt	3580.5	852.5	15155.6	18.9		
11.7 TO 11.8	FRONTAGE Rd Jct	Lt/Rt	1351.4	321.8	5720.0	7.2		
11.8 TO 12.1	FRONTAGE Rd TO S BUTTE Rd	Lt/Rt	2864.4	682.0	12124.4	15.2		
12.1 TO 12.2	S BUTTE Rd Jct	Lt/Rt	824.4	196.3	3489.4	4.4		
12.2 TO 12.4	S BUTTE Rd TO DRIVE WAY	Lt/Rt	1790.3	426.3	7577.8	9.5		
12.4 TO 12.5	DRIVE WAY Jct	Lt/Rt	1472.6	350.6	6233.3	7.8		
12.5 TO 12.6	DRIVE WAY TO N TOWNSHIP Rd	Lt/Rt	1178.1	280.5	4986.7	6.2		
12.6 TO 12.8	N TOWNSHIP Rd Jct	Lt/Rt	3149.7	749.9	13332.0	16.7		
12.8 TO 13.5	N TOWNSHIP Rd TO N GEORGE WASHINGTON Blvd	Lt/Rt	7854.0	1870.0	33244.4	41.6		
13.5 TO 13.7	N GEORGE WASHINGTON Blvd Jct	Lt/Rt	2855.2	679.8	12085.3	15.1		
13.7 TO 14.1	N GEORGE WASHINGTON Blvd TO EL MARGARITA Rd	Lt/Rt	4123.4	981.8	17453.3	21.8		
14.1 TO 14.2	EL MARGARITA Rd Jct	Lt/Rt	745.0	177.4	3153.3	3.9		
14.2 TO 14.3	EL MARGARITA Rd TO HARTER Rd	Lt/Rt	1963.5	467.5	8311.1	10.4		
14.3 TO 14.6	HARTER Rd Jct	Lt/Rt	5024.3	1196.3	21266.7	26.6		
14.6 TO 14.8	HARTER Rd TO THARP Rd	Lt/Rt	1963.5	467.5	8311.1	10.4		
14.8 TO 14.9	THARP Rd Jct	Lt/Rt	1207.0		5108.9	4.3		
14.9 TO 15.0	THARP Rd TO N WALTON Ave/STABLER Ln	Lt/Rt	2714.3		11488.9	9.6		
15.0 TO 15.1	N WALTON Ave/STABLER Ln Jct	Lt/Rt	2229.2		9435.6	7.9		
15.1 TO 15.3	N WALTON Ave/STABLER Ln TO CIVIC CENTER Blvd	Lt/Rt	2079.0		8800.0	7.3		
15.15	REBUILD Rdwy AT RR AND ISLAND LOCATION	Lt/Rt	114.7				60.0	146.4
15.3 TO 15.4	CIVIC CENTER Blvd Jct	Lt/Rt	658.4		2786.7	2.3		
15.4 TO 15.6	CIVIC CENTER Blvd TO WEST OF Rte 99	Lt/Rt	2061.7		8726.7	7.3		
15.7 TO 15.8	EAST OF Rte 99 THROUGH ROCCA WAY	Lt/Rt	1582.8		9379.3	3.9		
15.8 TO 15.9	THROUGH GRAY Ave	Lt/Rt	1288.7		7636.4	3.2		
15.9 TO 16.0	THROUGH STAFFORD WAY	Lt/Rt	1052.5		6236.8	2.6		
16.0 TO 16.1	CLARK Ave Jct	Lt/Rt	952.9		5646.7	2.4		
16.1 TO 16.3	THROUGH COOPER Ave AND ORANGE St	Lt/Rt	1270.9		7531.3	3.1		
16.3 TO 16.4	THROUGH LIVE OAK Blvd AND CHESTNUT St	Lt/Rt	1192.5		7066.9	2.9		
16.4 TO 16.6	THROUGH PLUMAS St TO SHASTA St	Lt/Rt	1784.5		10574.7	4.4		
16.6 TO 17.0	SHASTA St TO END Const (INCLUDES WB OFF RAMP)	Lt/Rt	3097.1		18352.9	7.6		
		TOTAL	66522.1	10294.4	301782.3	297.6	60.0	146.4

SUMMARY OF QUANTITIES

Q-1

STATE OF CALIFORNIA - DEPARTMENT OF TRANSPORTATION
Caltrans
NORTH REGION
OFFICE OF PROJECT DEVELOPMENT
TAHOE TEAM TT4

FUNCTIONAL SUPERVISOR: MASTRI ALVANDI
CALCULATED - DESIGNED BY: CHARLES WOOTEN
CHECKED BY: JOHN WELCH
REVISED BY: CW
DATE REVISED: 06-21-10

LAST REVISION 7-26-10
DATE PLOTTED => 05-AUG-2010
TIME PLOTTED => 13:46

Dist	COUNTY	ROUTE	POST MILES TOTAL PROJECT	SHEET No.	TOTAL SHEETS
03	Sut	20	11.2/17.0	19	31

R. P. Gill 7-26-10
REGISTERED ELECTRICAL ENGINEER

7-26-10
PLANS APPROVAL DATE

REGISTERED PROFESSIONAL ENGINEER
RUPINDER PAL GILL
No. 16642
Exp 06-30-12
ELECTRICAL
STATE OF CALIFORNIA

THE STATE OF CALIFORNIA OR ITS OFFICERS OR AGENTS SHALL NOT BE RESPONSIBLE FOR THE ACCURACY OR COMPLETENESS OF SCANNED COPIES OF THIS PLAN SHEET.

PROJECT NOTES (THIS SHEET ONLY):

1. AB EXISTING LOOP CONDUCTORS. RC dh. INSTALL DH AND CONDUIT TO pb.
2. INSTALL TEMPORARY POLE MOUNTED MVDS AS DIRECTED BY THE ENGINEER. USE WIRELESS COMMUNICATION BACK TO SIGNAL CONTROLLER CABINET AND COORDINATE WITH THE ENGINEER. MVDS UNIT SHALL BE COMPATIBLE WITH THE CONTROLLER CABINET AND SHALL SIMULATE THE ACTION OF EXISTING DETECTOR LOOPS. RC POLE AND MVDS AFTER COMPLETION OF WORK.
3. EXISTING 1½"C AND 1 dlc PER LOOP TO CONTROLLER CABINET (SEE TABLE).

GENERAL NOTES:

1. FOR COMPLETE RIGHT OF WAY AND ACCURATE ACCESS DATA, SEE RIGHT OF WAY RECORDS AT DISTRICT OFFICE.
2. EXACT LOCATION AND ORIENTATION OF ELECTRICAL EQUIPMENT SHALL BE APPROVED BY THE ENGINEER IN THE FIELD.
3. CONTRACTOR SHALL FIELD VERIFY EXACT LOCATION AND PROTECT EXISTING UTILITIES DURING CONSTRUCTION.

LEGEND:

SOLAR POWERED MVDS UNIT ON TEMPORARY WOOD POLE (UNIT TO BE MOUNTED AT 23'. POLE SHALL BE 30' FROM ETW OR SHIELDED.)

ABBREVIATION:

MVDS - MICROWAVE VEHICLE DETECTION SYSTEM

TRAFFIC SIGNAL SYSTEM LOOP QUANTITY TABLE

LOCATION	DESCRIPTION	APPROXIMATE POST MILE	No. OF MAINLINE LOOPS		No. OF COUNT LOOPS
			TYPE C LOOPS	TYPE A LOOPS	
1	N TOWNSHIP Rd	12.6	14 (25')	14	8
2	N GEORGE WASHINGTON Blvd	13.6	6 (55')	9	8
3	HARTER Rd	14.5	20 (25')	17	8
4	THARP Rd	14.8	8 (50')	8	NONE
5	N WALTON/STABLER Ln	15.1	9 (45')	8	NONE
6	CIVIC CENTER Blvd	15.3	7 (50')	8	8
7	ROCCA WAY	15.7	8 (50')	5	NONE
8	GRAY Ave	15.8	9 (50')	8	NONE
9	CLARK Ave	16.1	NONE	24	NONE
10	LIVE OAK Blvd	16.3	9 (50')	4	NONE
11	PLUMAS St	16.5	7 (50')	5	NONE
12	SHASTA St	16.6	7 (50')	10	NONE

APPROXIMATE DISTANCE OF LOOPS FROM LIMIT LINE

LOCATION	ADVANCE LOOPS	MID LOOPS	COUNT LOOPS
1 EB	-500'	-240' & -150'	-450' & +475'
1 WB	-425'	-260' & -150'	-475' & +450'
2 EB	-410'	-220'	+950'
2 WB	-410'	-220'	-950'
3 EB	-415'	-260' & -95'	+410'
3 WB	-410'	-257' & -97'	+415'
4 EB	-300'	-200'	-
4 WB	-300'	-200'	-
5 EB	-300'	-200'	-
5 WB	-320'	-180'	-
6 EB	-300'	-140'	+250'
6 WB	-250'	-140'	+300'
7 EB	-185'	-	-
7 WB	-185'	-	-
8 EB	-200'	-	-
8 WB	-200'	-	-
9 EB	-185'	-	-
9 WB	-185'	-	-
10 EB	-180'	-	-
10 WB	-180'	-	-
11 EB	-185'	-	-
11 WB	-185'	-	-
12 EB	-185'	-115'	-
12 WB	-250'	-150'	-

\- PRIOR TO SIGNAL
\+ POST SIGNAL

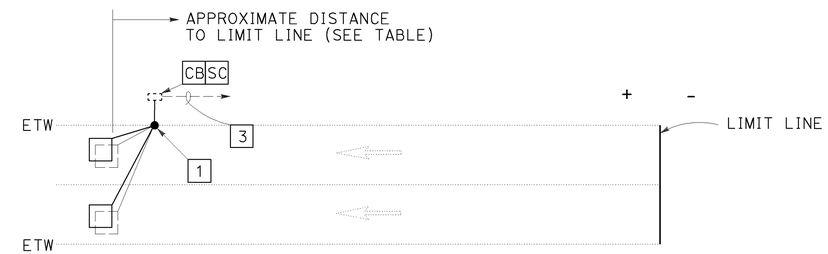

TYPICAL SIGNAL COUNT LOOP REPLACEMENT
NO SCALE

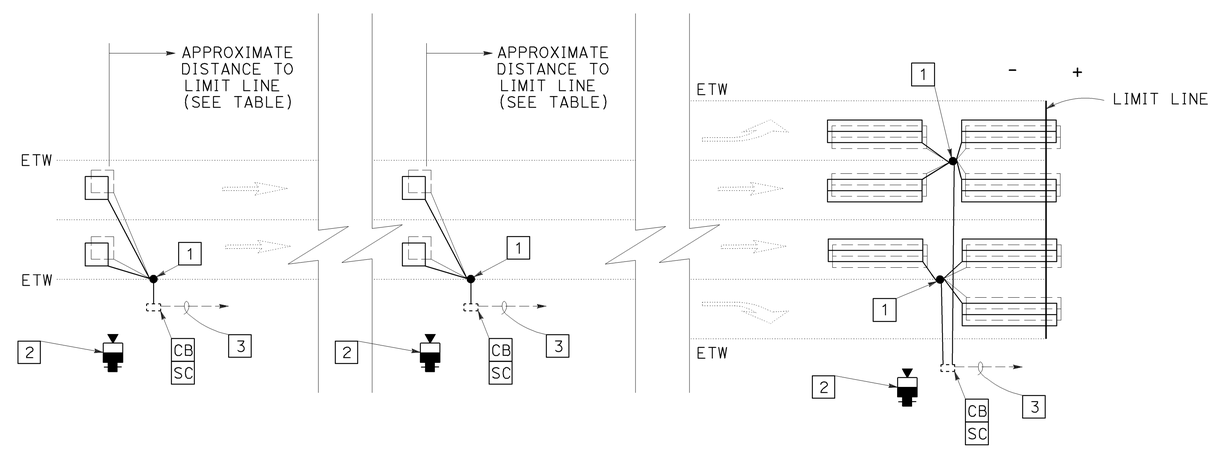

TYPICAL SIGNAL LOOP REPLACEMENT
NO SCALE

MODIFY SIGNAL MICROWAVE VEHICLE DETECTION SYSTEM

NO SCALE

E-1

THIS PLAN IS ACCURATE FOR ELECTRICAL WORK ONLY.

REVISED BY | DATE REVISED
TOM McEWAN | RUPINDER PAL GILL
CALCULATED-DESIGNED BY | CHECKED BY
FUNCTIONAL SUPERVISOR
STEVEN BLOCK

STATE OF CALIFORNIA - DEPARTMENT OF TRANSPORTATION
Caltrans
TRAFFIC ELECTRICAL DESIGN MARYSVILLE

\\Sv03s01\cadd\proj4\03\1f470\drafting\31F470ua001.dgn

LAST REVISION 7-26-10 | DATE PLOTTED => 05-AUG-2010 | TIME PLOTTED => 13:46

Dist	COUNTY	ROUTE	POST MILES TOTAL PROJECT	SHEET No.	TOTAL SHEETS
03	Sut	20	11.2/17.0	20	31

R. P. Gill 7-26-10
REGISTERED ELECTRICAL ENGINEER

7-26-10
PLANS APPROVAL DATE

REGISTERED PROFESSIONAL ENGINEER
RUPINDER PAL GILL
No. 16642
Exp. 06-30-12
ELECTRICAL
STATE OF CALIFORNIA

THE STATE OF CALIFORNIA OR ITS OFFICERS OR AGENTS SHALL NOT BE RESPONSIBLE FOR THE ACCURACY OR COMPLETENESS OF SCANNED COPIES OF THIS PLAN SHEET.

PROJECT NOTES (THIS SHEET ONLY):

1 Exist NON-INVASIVE, MAGNETO INDUCTIVE VEHICLE SENSOR.

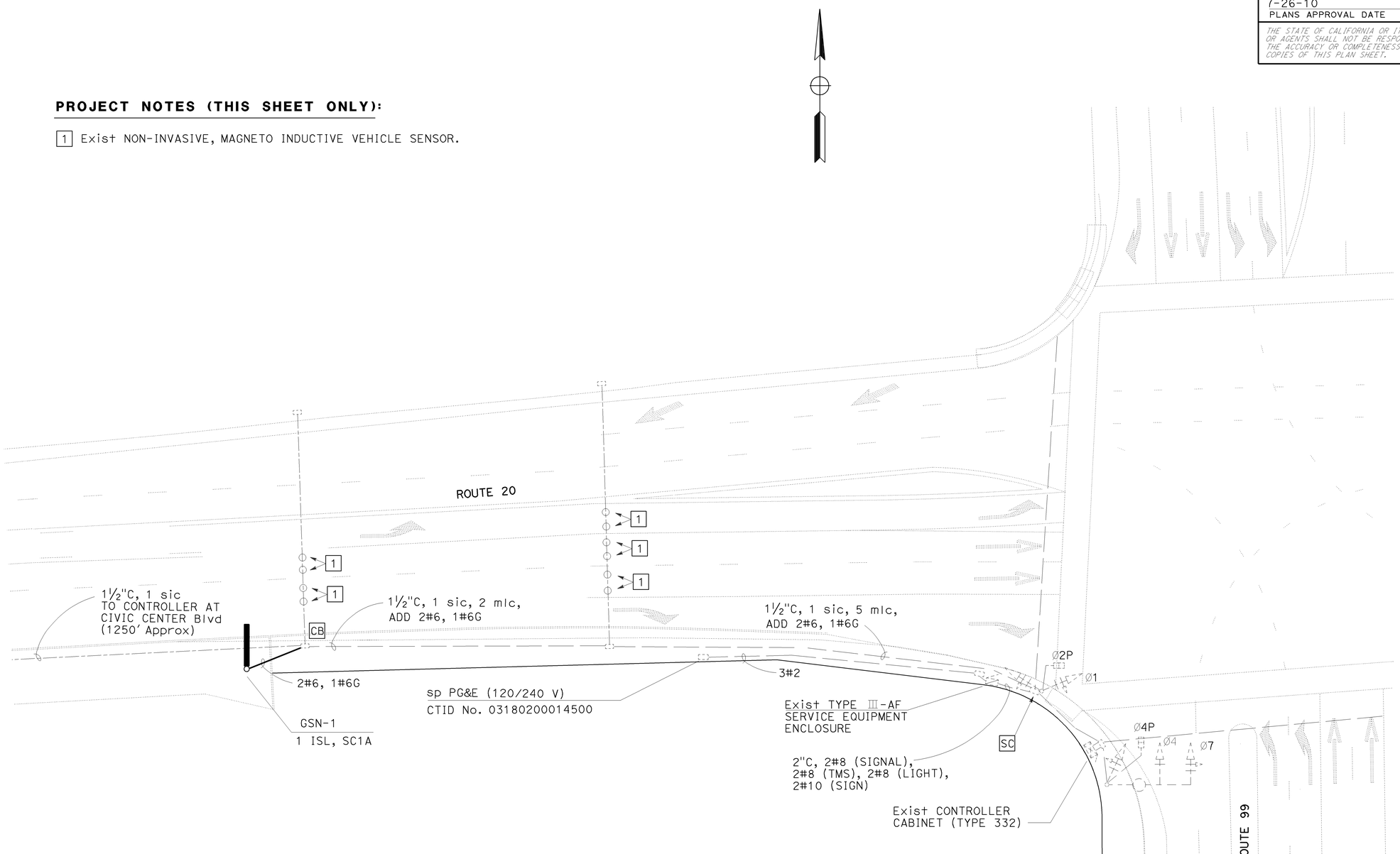

ABBREVIATIONS:

mlc - Exist MICRO LEAD-IN CABLE

SIGN ILLUMINATION

SCALE: 1" = 20'

E-2

THIS PLAN IS ACCURATE FOR ELECTRICAL WORK ONLY.

STATE OF CALIFORNIA - DEPARTMENT OF TRANSPORTATION
Caltrans
TRAFFIC ELECTRICAL DESIGN MARYSVILLE

FUNCTIONAL SUPERVISOR: STEVEN BLOCK
CALCULATED-DESIGNED BY: RUPINDER GILL
CHECKED BY: STEVEN BLOCK
REVISED BY
DATE REVISED

\\Sv03s01\cadd\proj4\03\1f470\drafting\31F470ua002.dgn

LAST REVISION 7-26-10
DATE PLOTTED => 05-AUG-2010
TIME PLOTTED => 13:46

DIST	COUNTY	ROUTE	POST MILES TOTAL PROJECT	SHEET NO.	TOTAL SHEETS
03	Sut	20	11.2/17.0	21	31

REGISTERED CIVIL ENGINEER

June 6, 2008
PLANS APPROVAL DATE

REGISTERED PROFESSIONAL ENGINEER
Donald E. Howe
No. C46402
Exp. 3-31-09
CIVIL
STATE OF CALIFORNIA

The State of California or its officers or agents shall not be responsible for the accuracy or completeness of electronic copies of this plan sheet.

To accompany plans dated July 26, 2010

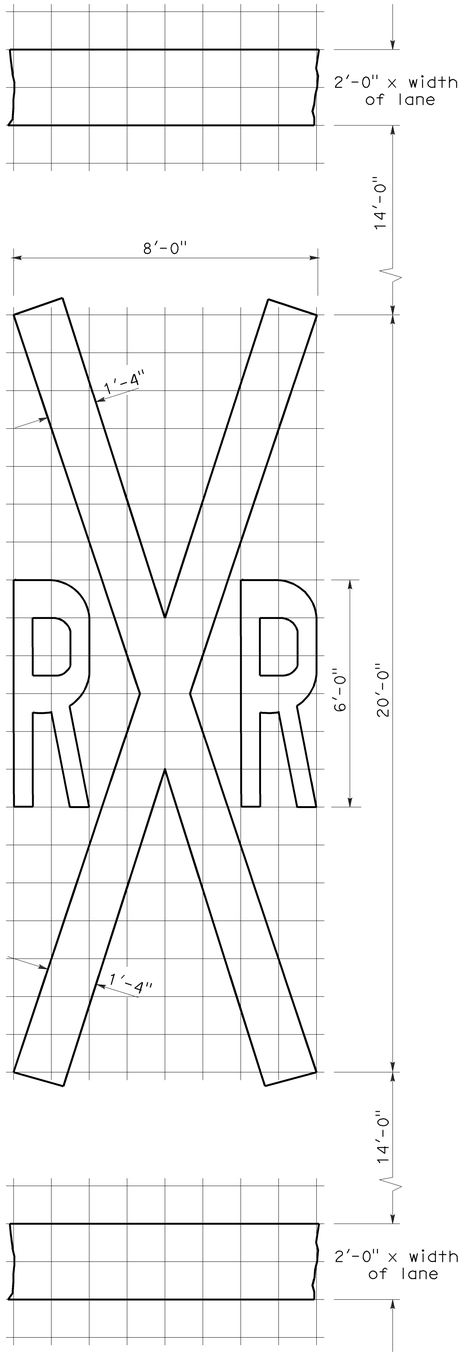

1'-0" GRID
A=70 sq ft ✳

RAILROAD CROSSING SYMBOL

✳70 sq ft DOES NOT INCLUDE THE 2'-0" x VARIABLE WIDTH TRANSVERSE LINES.

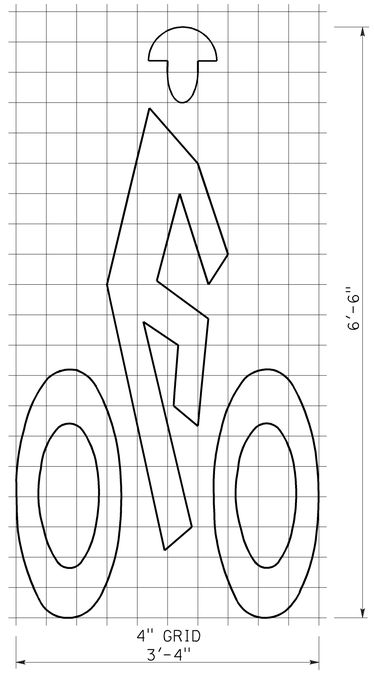

A=7 sq ft

BIKE LANE SYMBOL

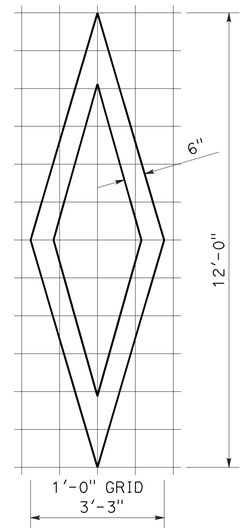

A=11 sq ft

DIAMOND SYMBOL

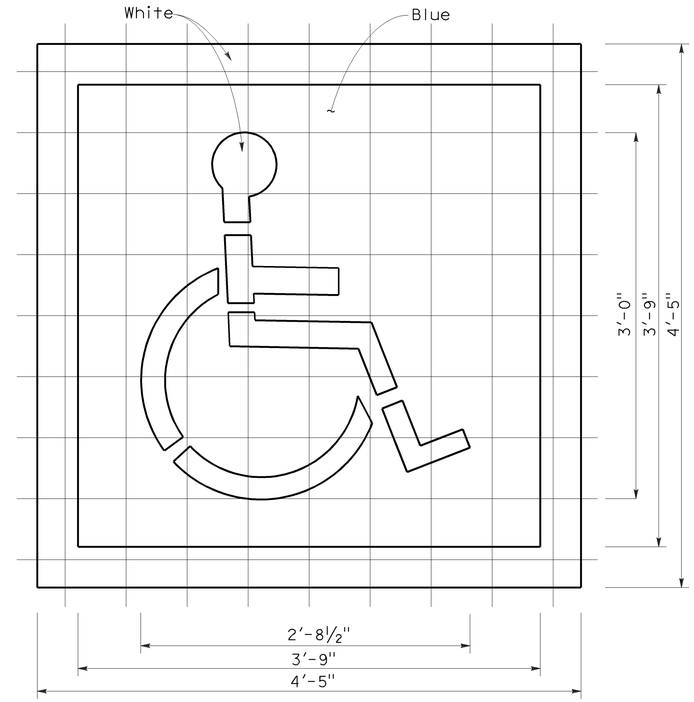

6" GRID
A (White) =9 sq ft
A (Blue) =14 sq ft

INTERNATIONAL SYMBOL OF ACCESSIBILITY MARKING

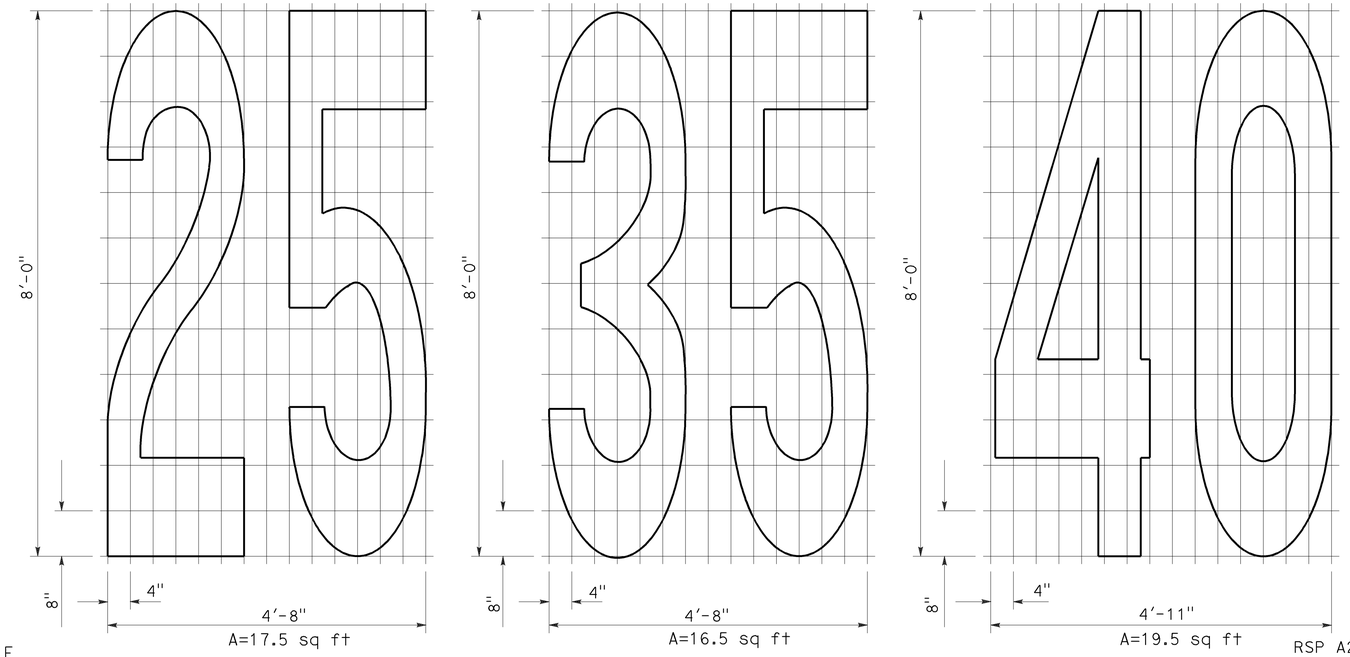

A=17.5 sq ft
A=16.5 sq ft
A=19.5 sq ft

NUMERALS

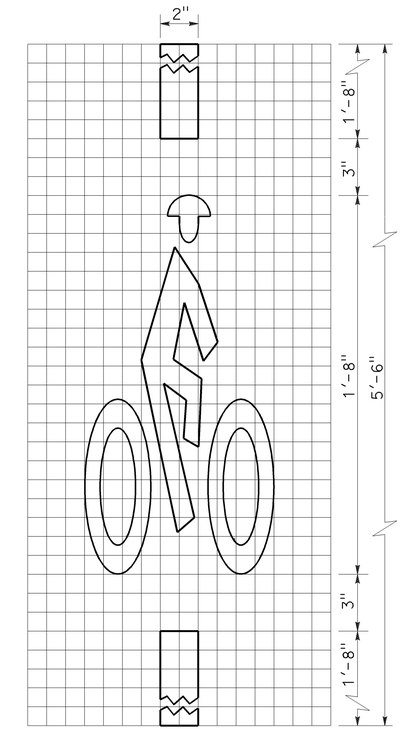

A=2 sq ft

BICYCLE LOOP DETECTOR SYMBOL

NOTE:

1. Minor variations in dimensions may be accepted by the Engineer.

STATE OF CALIFORNIA
DEPARTMENT OF TRANSPORTATION

PAVEMENT MARKINGS SYMBOLS AND NUMERALS

NO SCALE

RSP A24C DATED JUNE 6, 2008 SUPERSEDES STANDARD PLAN A24C DATED MAY 1, 2006 - PAGE 11 OF THE STANDARD PLANS BOOK DATED MAY 2006.

REVISED STANDARD PLAN RSP A24C

2006 REVISED STANDARD PLAN RSP A24C

5-27-08

DIST	COUNTY	ROUTE	POST MILES TOTAL PROJECT	SHEET NO.	TOTAL SHEETS
03	Sut	20	11.2/17.0	22	31

REGISTERED CIVIL ENGINEER

November 17, 2006
PLANS APPROVAL DATE

REGISTERED PROFESSIONAL ENGINEER Dallas Forester No. C37765 Exp. 12-31-06 CIVIL STATE OF CALIFORNIA

The State of California or its officers or agents shall not be responsible for the accuracy or completeness of electronic copies of this plan sheet.

To accompany plans dated July 26, 2010

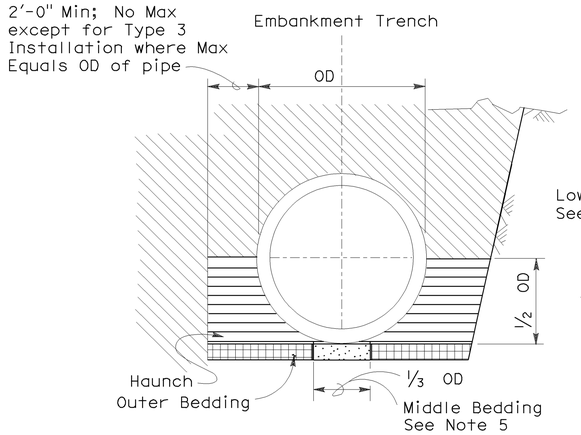

BACKFILL

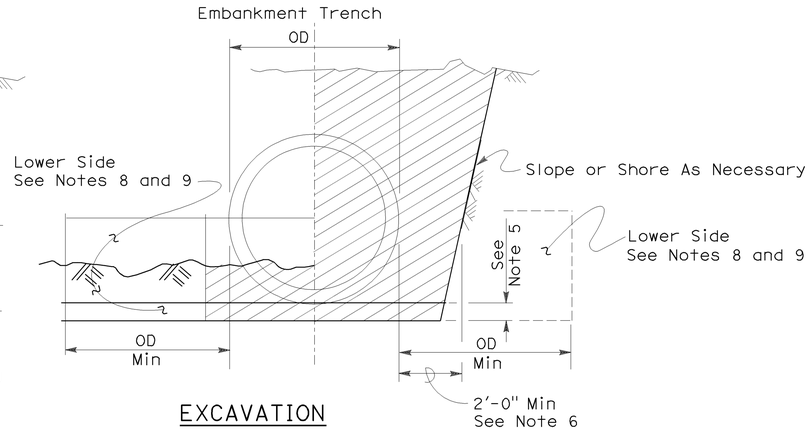

EXCAVATION

Roadway Embankment

Structure Backfill (Culvert) See Note 6

Structure Backfill (Culvert) See Note 6

Loose Backfill

Excavation Structure (Culvert)

TYPE 1 INSTALLATION:

The haunch and outer bedding shall be compacted to a minimum 90 percent relative compaction. In addition, the minimum sand equivalent in these areas shall be 30 and the maximum percentage passing the 75 μm sieve size shall be 12.

TYPE 2 INSTALLATION:

The haunch and outer bedding shall be compacted to a minimum 90 percent relative compaction. In addition, the minimum sand equivalent in these areas shall be 25.

TYPE 3 INSTALLATION:

The haunch and outer bedding shall be compacted to a minimum 85 percent relative compaction. 90 percent relative compaction will be required where the fill over the pipe is less than 4'-0" or 1/2 OD.

NOTES:

1. Unless otherwise shown on the plans or specified in the special provision, the Contractor shall have the option of selecting the class of RCP and the type of installation to be used, provided the height of cover does not exceed the value shown for the RCP selected.
   Example: 24" RCP culvert with maximum cover of 19'-0" the options are:
   a) Class III or stronger with Installation Type 1.
   b) Class III Special or stronger with Installation Type 2.
   c) Class IV Special or stronger with Installation Type 3.
   Cover is defined as the maximum vertical distance from top of the pipe to finished grade within the length of any given culvert.
2. The class of RCP and Installation Type selected shall be the same throughout the length of any given culvert.
3. The "length of any culvert" is defined as the culvert between:
   a) Successive drainage structure (inlets, junction boxes, headwalls, etc.).
   b) A drainage structure and the inlet or outlet end of the culvert.
   c) The inlet and outlet end of the culvert when there are no intervening drainage structures.
4. Oval and arch shaped RCP shall not be used.
5. 1/25 OD Min, not less than 3".
6. Slurry cement backfill may be substituted for backfill in the outer bedding and haunch areas. If slurry is used the outer and middle beddings shall be omitted. Prior to installation the soil under the middle 1/3 of the outside diameter of the pipe shall be softened by scarifying or other means to a minimum depth of 1/25 OD, but not less than 3". Where slurry cement backfill is used clear distance to trench wall may be reduced as set forth in Section 19-3.062 of the Standard Specifications.
7. Backfill shall be placed full width of excavation except where dimensions are shown for backfill width or thickness. Dimensions shown are minimums.
8. Lower side shall be suitable material as determined by the Engineer. Otherwise it shall be considered unsuitable as set forth in Section 19-2.02 of the Standard Specifications. See Note 9.
9. Where the pipe is placed in a trench, if the trench walls are sloped at 5 vertical to 1 horizontal or steeper for at least 90 percent of the trench height or up to not less than 12" from the grading plane, the firmness of the soil in the lower side need not be considered.
10. Non-reinforced precast concrete pipe sizes 3'-0" or smaller may be placed under installation Types 1, 2 or 3.

INSTALLATION TYPE 1

MINIMUM CLASS AND D-LOAD	COVER	
	108" Dia AND SMALLER	OVER 108" Dia
Class II 1000D	14.9'	12.9'
Class III 1350D	15.0' - 20.9'	13.0' - 18.9'
Class III Special 1700D	21.0' - 26.9'	19.0' - 24.9'
Class IV 2000D	27.0' - 31.9'	25.0' - 29.9'
Class IV Special 2500D	32.0' - 40.9'	30.0' - 38.9'
Class V 3000D	41.0' - 49.9'	39.0' - 46.9'
Class V Special 3600D	50.0' - 59.0'	47.0' - 58.0'

INSTALLATION TYPE 2

MINIMUM CLASS AND D-LOAD	COVER
Class II 1000D	9.9'
Class III 1350D	10.0'- 14.9'
Class III Special 1700D	15.0' - 19.9'
Class IV 2000D	20.0' - 24.9'
Class IV Special 2500D	25.0' - 31.9'
Class V 3000D	32.0' - 38.9'
Class V Special 3600D	39.0' - 47.0'

INSTALLATION TYPE 3

MINIMUM CLASS AND D-LOAD	COVER	
	48" Dia AND SMALLER	OVER 48" Dia
Class II 1000D	7.9'	5.9'
Class III 1350D	8.0' - 10.9'	6.0' - 8.9'
Class III Special 1700D	11.0' - 14.9'	9.0' - 12.9'
Class IV 2000D	15.0' - 17.9'	13.0' - 15.9'
Class IV Special 2500D	18.0' - 21.9'	16.0' - 19.9'
Class V 3000D	22.0' - 26.9'	20.0' - 24.9'
Class V Special 3600D	30.0' - 33.0'	25.0' - 31.0'

STATE OF CALIFORNIA
DEPARTMENT OF TRANSPORTATION

EXCAVATION AND BACKFILL CONCRETE PIPE CULVERTS

NO SCALE

RSP A62DA DATED NOVEMBER 17, 2006 SUPERSEDES STANDARD PLAN A62DA DATED MAY 1, 2006 - PAGE 20 OF THE STANDARD PLANS BOOK DATED MAY 2006.

REVISED STANDARD PLAN RSP A62DA

2006 REVISED STANDARD PLAN RSP A62DA

10-26-06

DIST	COUNTY	ROUTE	POST MILES TOTAL PROJECT	SHEET NO.	TOTAL SHEETS
03	Sut	20	11.2/17.0	23	31

REGISTERED ELECTRICAL ENGINEER

October 5, 2007
PLANS APPROVAL DATE

REGISTERED PROFESSIONAL ENGINEER Jeffery G. McRae No. E14512 Exp. 6-30-08 ELECTRICAL STATE OF CALIFORNIA

The State of California or its officers or agents shall not be responsible for the accuracy or completeness of electronic copies of this plan sheet.

To accompany plans dated July 26, 2010

2006 REVISED STANDARD PLAN RSP ES-1A

ELECTROLIERS

STANDARD TYPES
15, 15D
15 STRUCTURE
21, 21D STRUCTURE
30
31
32
35
36-20A

High mast light pole

Double Arm lighting standard

Existing electrolier

Electrolier foundation (Future installation)

NOTES:

1. Luminaires shall be 310 W HPS when installed on Type 21, 21D, 30, 31, 32, 35 and 36-20A Standards, unless otherwise specified. Luminaires shall be 200 W HPS when installed on other type standards or poles, unless otherwise specified.
2. Luminaires shall be the cutoff type, ANSI Type III medium cutoff lighting distribution, unless otherwise specified.
3. Variations noted adjacent to symbol on project plans.

Electrolier (see project notes or project plans)

Luminaire on wood pole

STANDARD NOTES:

- AB Abandon. If applied to conduit, remove conductors.
- BC Install pull box in existing conduit run.
- BP Pedestrian barricade, type as indicated on plan.
- CB Install conduit into existing pull box.
- CC Connect new and existing conduit. Remove existing conductors and install conductors as indicated.
- CF Conduit to remain for future use. Remove conductors. Install pull wire or rope.
- DH Detector handhole.
- FA Foundation to be abandoned.
- IS Install sign on signal mast arm.
- NS No slip base on standard.
- PEC Photoelectric control.
- PEU Photoelectric unit.
- RC Equipment or material to be removed and become the property of the Contractor.
- RE Remove electrolier, fuses and ballast. Tape ends of conductors.
- RL Relocate equipment.
- RR Remove and reuse equipment.
- RS Remove and salvage equipment.
- SC Splice new to existing conductors.
- SD Service disconnect.
- SF Standard to remain for future use. Remove luminaire, pole conductors, fuses and ballast.
- TSP Telephone service point.

ABBREVIATIONS AND EQUIPMENT DESIGNATIONS

PROPOSED	EXISTING	
BBS	bbs	Battery backup system
BC	bc	Bolt circle
C	C	Conduit
CCTV	cctv	Closed circuit television
CKT	ckt	Circuit
CMS	cms	Changeable message sign
DLC	dlc	Loop detector lead-in cable
EMS	ems	Extinguishable message sign
EVC	evc	Emergency vehicle cable
EVD	evd	Emergency vehicle detector
FB	fb	Flashing beacon
FBCA	fbca	Flashing beacon control assembly
FBS	fbs	Flashing beacon with slip base
FO	fo	Fiber optic
G	G	Ground (Equipment Grounding Conductor)
GFCI	GFCI	Ground fault circuit interrupt
HAR	har	Highway advisory radio
HEX	hex	Hexagonal
HPS	hps	High pressure sodium
IISNS	iisns	Internally illuminated street name sign
ISL	isl	Induction sign lighting
LED	led	Light emitting diode
LMA	lma	Luminaire mast arm
LPS	lps	Low pressure sodium
LTG	ltg	Lighting
LUM	lum	Luminaire
MAT	mat	Mast arm mounting vehicle signal faces, top attachment
MAS	mas	Mast arm mounting vehicle signal faces, side attachment
MAS-4A	mas-4A	Mast arm mounting vehicle signal faces, side attachment - 4 signal section
MAS-4B	mas-4B	
MAS-4C	mas-4C	
MAS-5A	mas-5A	Mast arm mounting vehicle signal faces, side attachment - 5 signal section
MAS-5B	mas-5B	
MC	mc	Mercury contactor
M/M	m/m	Multiple to multiple transformer
MT	mt	Conduit with pull wire or rope only
MTG	mtg	Mounting
	mv	Mercury vapor lighting fixture
N	N	Neutral (Grounded Conductor)
NC	NC	Normally closed
NO	NO	Normally open
PB	pb	Pull box
PEC	pec	Photoelectric control (Type I, II, III, IV or V as shown)
PED	ped	Pedestrian
PEU	peu	Photoelectric unit
PPB	ppb	Pedestrian push button
RL		Relocated equipment
RM	rm	Ramp metering
SB	sb	Slip base
SIC	sic	Signal interconnect cable
SIG	sig	Signal
SMA	sma	Signal mast arm
SNS	sns	Street name sign
SP	sp	Service point
TDC	tdc	Telephone demarcation cabinet
TMS	tms	Traffic monitoring station
TOS	tos	Traffic Operations System
VEH	veh	Vehicle
XFMR	xfmr	Transformer
COMM	comm	Communication
RWIS	rwis	Roadway weather information system

SOFFIT AND WALL MOUNTED LUMINAIRES

Pendant, 70 W HPS unless otherwise specified.

Flush, 70 W HPS unless otherwise specified.

Wall surface, 70 W HPS unless otherwise specified.

Existing soffit or wall luminaire to remain unmodified.

Existing soffit or wall luminaire to be modified as specified.

NOTE:

Arrow indicates "street side" of luminaire.

STATE OF CALIFORNIA
DEPARTMENT OF TRANSPORTATION

ELECTRICAL SYSTEMS (SYMBOLS AND ABBREVIATIONS)

NO SCALE

RSP ES-1A DATED OCTOBER 5, 2007 SUPERSEDES STANDARD PLAN ES-1A DATED MAY 1, 2006 - PAGE 400 OF THE STANDARD PLANS BOOK DATED MAY 2006.

REVISED STANDARD PLAN RSP ES-1A

DIST	COUNTY	ROUTE	POST MILES TOTAL PROJECT	SHEET NO.	TOTAL SHEETS
03	Sut	20	11.2/17.0	24	31

REGISTERED ELECTRICAL ENGINEER

October 5, 2007
PLANS APPROVAL DATE

REGISTERED PROFESSIONAL ENGINEER Jeffery G. McRae No. E14512 Exp. 6-30-08 ELECTRICAL STATE OF CALIFORNIA

The State of California or its officers or agents shall not be responsible for the accuracy or completeness of electronic copies of this plan sheet.

To accompany plans dated July 26, 2010

CONDUIT

PROPOSED	EXISTING	
		Lighting Conduit, unless otherwise indicated or noted
		Traffic signal conduit
C	c	Communication conduit
T	t	Telephone conduit
F	f	Fire alarm conduit
FO	fo	Fiber optic conduit
		Conduit termination (RSP ES-9A C)
R	r	Conduit riser in/on structure or service pole

SERVICE EQUIPMENT

PROPOSED	EXISTING	
OH	oh	Overhead lines
U	U	Wood pole "U" indicates utility owned
		Pole guy with anchor
		Utility transformer - ground mounted
III		Service equipment enclosure type
		Service equipment enclosure door indicates front of enclosure
T	t	Telephone demarcation cabinet

POLE-MOUNTED SERVICE DESIGNATION

Type of installation

TYPE H SERVICE - 28'-10" ← Pole height above grade

ILLUMINATED OVERHEAD SIGN

PROPOSED	EXISTING	
		Overhead sign - Single post
		Overhead sign - Two post
		Overhead sign - Mounted on structure
		Overhead sign with electrolier

SIGNAL EQUIPMENT

PROPOSED	EXISTING	
		Pedestrian signal face
		Pedestrian push button post
		Pedestrian barricade
		Vehicle signal face (with backplate, 3-Section: red, yellow and green)
		Vehicle signal face with angle visors
PV	PV	Modifications of basic symbols: "L" Indicates all non-arrow sections louvered "LG" indicates louvered green section only "PV" indicates 12" programmed visibility sections "8" indicates all 8" sections (only when specified)
		Type 15TS and Vehicle signal face
		Vehicle signal face with red, yellow and green left arrow sections
		Vehicle signal face with red and yellow sections and up green arrow
		Vehicle signal face (5 Section) with red, yellow and green sections and yellow and green right arrows
		Type 1 Standard and attached vehicle signal faces
		Standard with signal mast arm only and attached vehicle signal faces and internally illuminated street name sign
		Type 33 Standard, Left-turn vehicle signal face and sign
		Standard with luminaire and signal mast arms and attached vehicle signal faces
		Cantilever flashing beacon Type 9 Frame, with a sign unless otherwise specified or indicated
		Type 15-FBS Standard with two vehicle signal face sections with lens, backplate and visor with a sign
R	Y	Flashing beacon. One vehicle signal face section with lens, backplate and visor. "R" indicates red indication, "Y" indicates yellow indication
		Controller assembly. Door indicates front of cabinet

SIGNAL EQUIPMENT Cont

PROPOSED	EXISTING	
		Guard post
		Type 1 Standard with "Meter On" sign
		Emergency Vehicle detector

NOTES:

1. All signal sections shall be 12" unless shown otherwise.
2. Signal heads shall be provided with backplates unless shown otherwise.
3. Signal indication shall be LED.

STATE OF CALIFORNIA
DEPARTMENT OF TRANSPORTATION

ELECTRICAL SYSTEMS (SYMBOLS AND ABBREVIATIONS)

NO SCALE

RSP ES-1B DATED OCTOBER 5, 2007 SUPERCEDES STANDARD PLAN ES-1B DATED MAY 1, 2006 - PAGE 401 OF THE STANDARD PLANS BOOK DATED MAY 2006.

REVISED STANDARD PLAN RSP ES-1B

2006 REVISED STANDARD PLAN RSP ES-1B

7-10-07

DIST	COUNTY	ROUTE	POST MILES TOTAL PROJECT	SHEET NO.	TOTAL SHEETS
03	Sut	20	11.2/17.0	25	31

REGISTERED ELECTRICAL ENGINEER

October 5, 2007
PLANS APPROVAL DATE

REGISTERED PROFESSIONAL ENGINEER Jeffery G. McRae No. E14512 Exp. 6-30-08 ELECTRICAL STATE OF CALIFORNIA

The State of California or its officers or agents shall not be responsible for the accuracy or completeness of electronic copies of this plan sheet.

To accompany plans dated July 26, 2010

EQUIPMENT IDENTIFICATION

ILLUMINATED SIGN IDENTIFICATION NUMBER:

Sign No. 12345 — Sign number - Place on post or structure

10 ISL SCI 1.0

- 1.0 — Transformer rating (kVA)
- SCI — Lighting control type
- ISL — Number and type of fixtures

Do NOT place on standard or structure

ELECTROLIER OR EQUIPMENT IDENTIFICATION NUMBER:

12345 - 15'-0"

- 15'-0" — Mast arm length, if shown. Do not place on standard or structure.
- 12345 — Equipment number - Place on standard or structure. Existing equipment numbers are shown in parenthesis

CONDUIT AND CONDUCTOR IDENTIFICATION:

1½"C, 2#10, 15#14, 2 DLC

- 2#10, 15#14, 2 DLC — Number and size of conductors and cables
- 1½"C — Size of conduit in inches

Ø1, Ø2, Ø2P, etc.	Traffic phase identification for signal faces, detectors and phase diagrams
1 2 3	Project note numbers
A B C	Equipment description, installation or item numbers
1 2 3	Conduit run numbers

SIGNAL AND LIGHTING STANDARD (TYPICAL DESIGNATION):

19A - 3 - 100

- 100 — Wind velocity = 100 mph
- 3 — Case 3 arm loading
- 19A — Standard type
- Standard Plan sheet number
- Detail number or letter

MISCELLANEOUS EQUIPMENT

PROPOSED	EXISTING	
CMS	cms	Changeable message sign
		Closed circuit television camera
		Highway advisory radio pole and antenna
EMS	ems	Extinguishable message sign
M V	m v	Detection device M = Microwave sensor V = Video image sensor

WIRING DIAGRAM LEGEND

P	Pole
CB	Circuit breaker
A	Ampere
V	Volt
M	Metered
UM	Unmetered
NB	Neutral bus
GB	Ground bus
G	Equipment grounding conductor
N	Grounded conductor (Neutral)

External conductor
Conductor or bus
Tie point
Contactor coil
Contactor, Contact NO
Terminal blocks
Contactor, Contact NC
Enclosure bond
Grounding electrode
Circuit breaker
Receptacle

PULL BOXES

PROPOSED — EXISTING

Pull box-No. 5 unless otherwise indicated or noted.

3 — 9A(21)

Pull box-Additional designations or descriptions

- 3 = No. 3½ pull box
- 5 = No. 5 pull box
- 6 = No. 6 pull box
- 7 = No. 7 (Ceiling pull box)
- 8 = No. 8 (Pendant soffit pull box)
- 9 = No. 9 pull box
- 9A = No. 9A pull box

- (C) = Communications pull box
- (E) = Pull box with extension
- (S) = Sprinkler control pull box
- (21) = Anchor bolts and conduit for future installation of Type 21 Standard
- (T) = Traffic pull box

VEHICLE DETECTORS

5 J 9 U

- U = Upper
- L = Lower
- Slot number in input file
- Input file (I or J)
- Phase

PROPOSED	EXISTING	
		Type A detector loop. Outline of sawcut shown.
		Type B detector loop. Outline of sawcut shown.
		Type C detector loop. Outline of sawcut shown.
		Type D detector loop. Outline of sawcut shown.
		Type E detector loop. Outline of sawcut shown.
		Type Q detector loop. Outline of sawcut shown.
		Magnetic detector
DH	dh	Detector handhole
		Microwave or video detection zone

STATE OF CALIFORNIA
DEPARTMENT OF TRANSPORTATION

ELECTRICAL SYSTEMS (SYMBOLS AND ABBREVIATIONS)

NO SCALE

RSP ES-1C DATED OCTOBER 5, 2007 SUPERCEDES STANDARD PLAN ES-1C DATED MAY 1, 2006 - PAGE 402 OF THE STANDARD PLANS BOOK DATED MAY 2006.

REVISED STANDARD PLAN RSP ES-1C

2006 REVISED STANDARD PLAN RSP ES-1C

DIST	COUNTY	ROUTE	POST MILES TOTAL PROJECT	SHEET NO.	TOTAL SHEETS
03	Sut	20	11.2/17.0	26	31

REGISTERED ELECTRICAL ENGINEER

October 5, 2007
PLANS APPROVAL DATE

REGISTERED PROFESSIONAL ENGINEER Jeffery G. McRae No. E14512 Exp. 6-30-08 ELECTRICAL STATE OF CALIFORNIA

The State of California or its officers or agents shall not be responsible for the accuracy or completeness of electronic copies of this plan sheet.

To accompany plans dated July 26, 2010

LOOP INSTALLATION PROCEDURE

1. Loops shall be centered in lanes.
2. Saw slots in pavement for loop conductors as shown in details.
3. Distance between side of loop and a lead-in saw cut from adjacent detectors shall be 2'-0" minimum. Distance between lead-in saw cuts shall be 6" minimum.
4. Bottom of saw slot shall be smooth with no sharp edges.
5. Slots shall be washed until clean, blown out and thoroughly dried before installing loop conductors.
6. Adjacent loops on the same sensor unit channel shall be wound in opposite directions.
7. Identify and tag loop circuit pairs in the pull box with loop number, start (S) and finish (F) of conductor. Identify and tag lead-in-cable with sensor number and phase.
8. Install loop conductor in slot using a 3/16" to 1/4" thick wood paddle. Hold loop conductors with wood paddles (at the bottom of the sawed slot) during sealant placement.
9. No more than 2 twisted pairs shall be installed in one sawed slot.
10. Allow additional 5'-0" of slack length of conductor for the lead-in run to pull box.
11. The additional length of each conductor for each loop shall be twisted together into a pair (6 turns per 3'-4" minimum) before being placed in the slot and conduit leading to pull box.
12. Test each loop circuit for continuity, circuit resistance and insulation resistance at the pull box before filling slots.
13. Fill slots as shown in details.
14. Splice loop conductors to lead-in-cable. Splices shall be soldered.
15. End of lead-in-cable and Type 2 loop conductor shall be waterproofed prior to installing in conduit to prevent moisture from entering the cable.
16. Lead-in-cable shall not be spliced between the pull box and the controller cabinet terminals.
17. Test each loop circuit for continuity, circuit resistance and insulation resistance at the controller cabinet location.
18. Where loop conductors are not to be spliced to a lead-in-cable, the ends of the conductors shall be taped and waterproofed with electrical insulating coating.

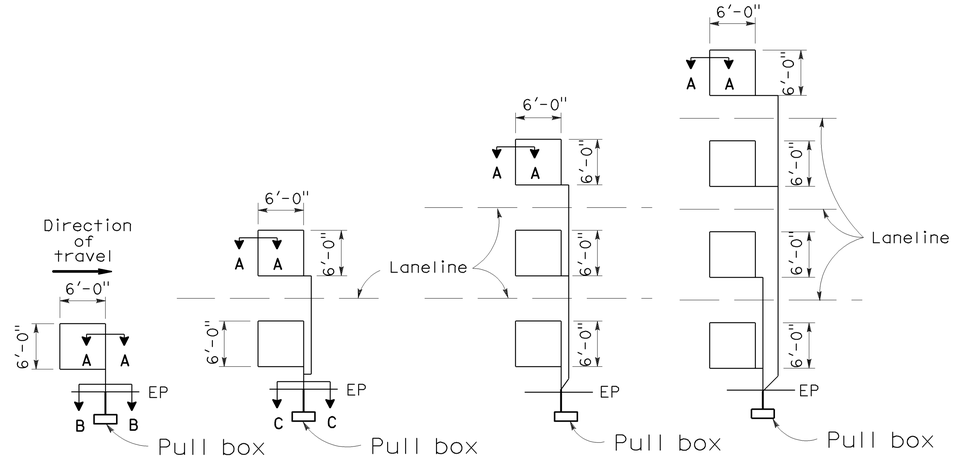

TYPE 1A INSTALLATION | TYPE 2A INSTALLATION | TYPE 3A INSTALLATION | TYPE 4A INSTALLATION

SAWCUT DETAILS

(Type A loop detector configurations illustrated)

1. 1A thru 4A = 1 Type A loop configuration in each lane.
2. 1B thru 4B = 1 Type B loop configuration in each lane.
3. 1C = 1 Type C loop configuration entering lanes as required.
4. 1D thru 4D = 1 Type D loop configuration in each lane.
5. 1E thru 4E = 1 Type E loop configuration in each lane.
6. 1Q thru 4Q = 1 Type Q loop configuration in each lane. (Use Type A, B, C, D, E or Q loop detector configurations only when specified or shown on plans)

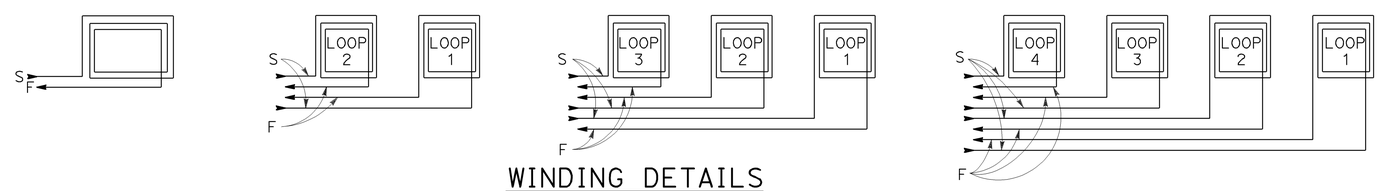

WINDING DETAILS

See Notes 6 and 7

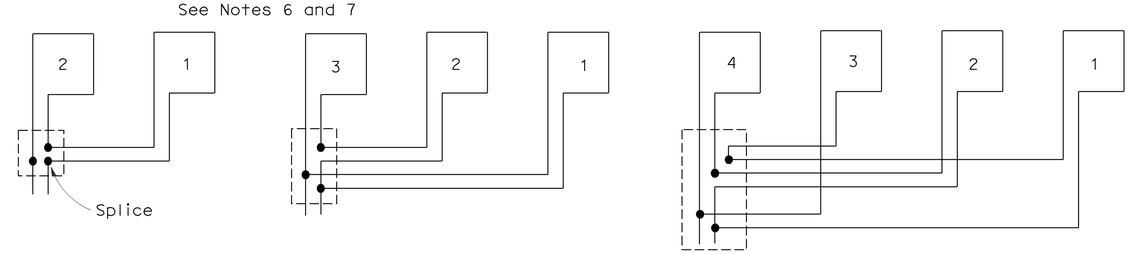

TYPICAL LOOP CONNECTIONS

(Dashed lines represent the pull box)

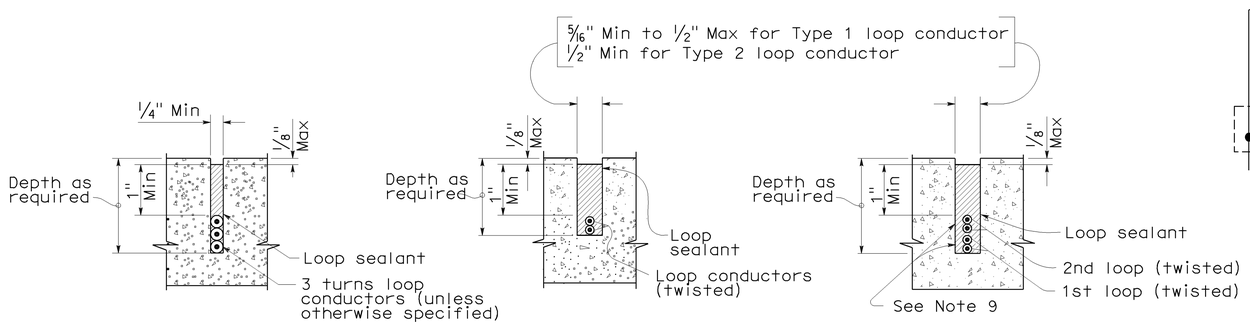

SECTION A-A | SECTION B-B | SECTION C-C

SLOT DETAILS - TYPE 1 AND TYPE 2 LOOP CONDUCTOR

STATE OF CALIFORNIA
DEPARTMENT OF TRANSPORTATION

ELECTRICAL SYSTEMS (DETECTORS)

NO SCALE

RSP ES-5A DATED OCTOBER 5, 2007 SUPERCEDES STANDARD PLAN ES-5A DATED MAY 1, 2006 - PAGE 423 OF THE STANDARD PLANS BOOK DATED MAY 2006.

REVISED STANDARD PLAN RSP ES-5A

2006 REVISED STANDARD PLAN RSP ES-5A

8-17-07

DIST	COUNTY	ROUTE	POST MILES TOTAL PROJECT	SHEET NO.	TOTAL SHEETS
03	Sut	20	11.2/17.0	27	31

REGISTERED CIVIL ENGINEER

October 5, 2007
PLANS APPROVAL DATE

REGISTERED PROFESSIONAL ENGINEER
Stanley P. Johnson
No. C57793
Exp. 3-31-08
CIVIL
STATE OF CALIFORNIA

The State of California or its officers or agents shall not be responsible for the accuracy or completeness of electronic copies of this plan sheet.

To accompany plans dated July 26, 2010

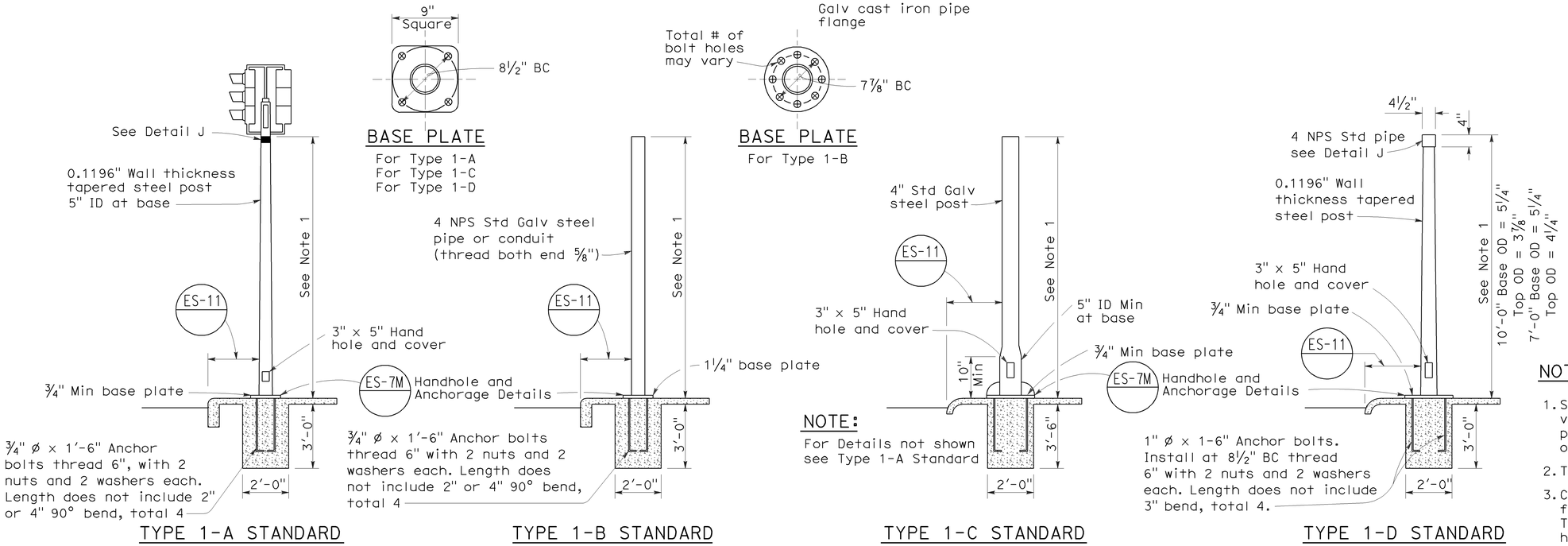

TYPE 1 SIGNAL STANDARDS

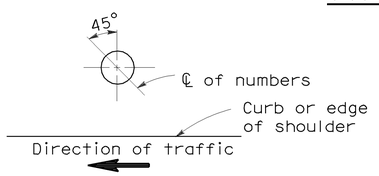

PLAN

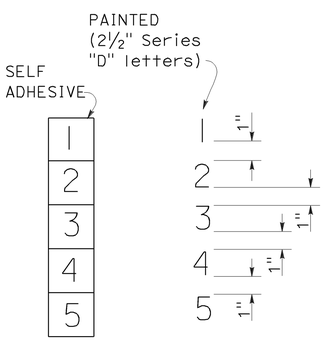

NUMBER DETAIL

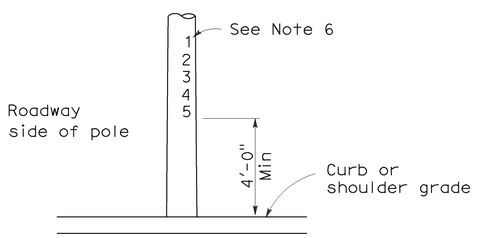

TYPICAL NUMBER FORMAT

LOCATION OF EQUIPMENT NUMBERS ON STANDARDS AND POSTS

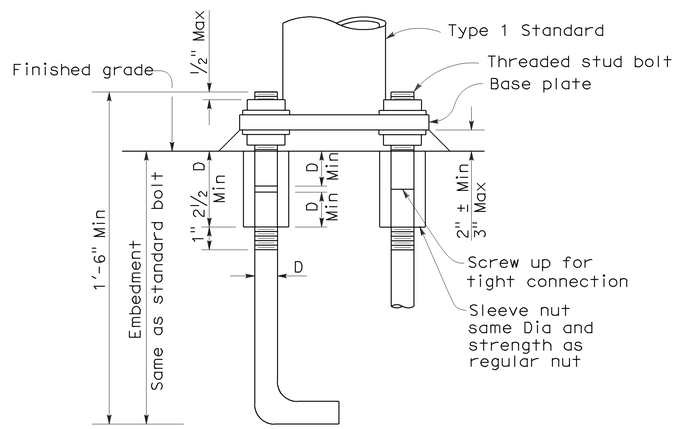

ANCHOR BOLTS WITH SLEEVE NUTS

Sleeve nuts to be used only when shown or specified on Project Plans

D = Diameter of anchor bolt

NOTES:

1. Standards shall be 10'-0" ± 2" for vehicle signals and 7'-0" ± 2" for pedestrian signals unless otherwise noted on plans.
2. Top of standards shall be 4½" OD.
3. Conduits shall extend 2" maximum above finished surface of foundation and for Types 1-A, 1-C and 1-D shall be sloped toward handhole.
4. Anchor bolts shall be bonded to conduit or grounding conductor.
5. Conduit between standard and adjacent pull box shall be 2" minimum.
6. Paint numbers on roadway side facing traffic when electrolier or post is left of direction of traffic.

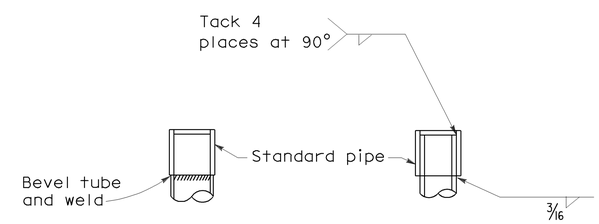

DETAIL J

Tube may be inserted into pipe or butted as required

STATE OF CALIFORNIA
DEPARTMENT OF TRANSPORTATION

ELECTRICAL SYSTEMS (SIGNAL AND LIGHTING STANDARD TYPE 1 STANDARD AND EQUIPMENT NUMBERING)

NO SCALE

RSP ES-7B DATED OCTOBER 5, 2007 SUPERCEDES STANDARD PLAN ES-7B DATED MAY 1, 2006 - PAGE 438 OF THE STANDARD PLANS BOOK DATED MAY 2006.

REVISED STANDARD PLAN RSP ES-7B

2006 REVISED STANDARD PLAN RSP ES-7B

7-10-07

DIST	COUNTY	ROUTE	POST MILES TOTAL PROJECT	SHEET NO.	TOTAL SHEETS
03	Sut	20	11.2/17.0	28	31

REGISTERED ELECTRICAL ENGINEER

October 5, 2007
PLANS APPROVAL DATE

REGISTERED PROFESSIONAL ENGINEER
Jeffery G. McRae
No. E14512
Exp. 6-30-08
ELECTRICAL
STATE OF CALIFORNIA

The State of California or its officers or agents shall not be responsible for the accuracy or completeness of electronic copies of this plan sheet.

To accompany plans dated July 26, 2010

2006 REVISED STANDARD PLAN RSP ES-15D

NOTES: (FOR LIGHTING AND SIGN ILLUMINATION CONTROL)

1. The ballast voltages of lighting fixtures and luminaires shall match line service voltages.
2. Voltage rating of photoelectric controls shall conform to the service voltage indicated on the plans.
3. Terminal strip shall be provided for wiring to fixtures.
4. Type SC1A, SC2A, SC3A controls are similar to Types SC1, SC2 and SC3 controls respectively except test switch and wiring are not required.

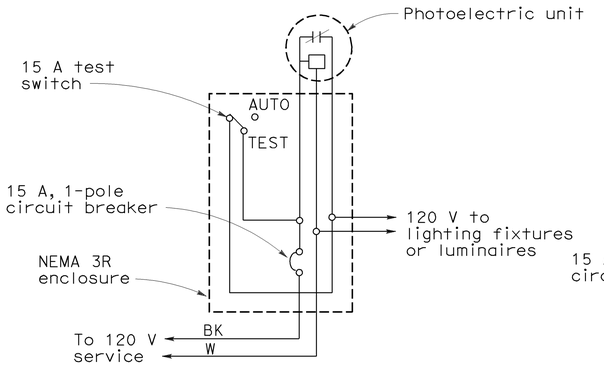

TYPE LC1 CONTROL

For 120 V unswitched circuit with no more than 800 W load.

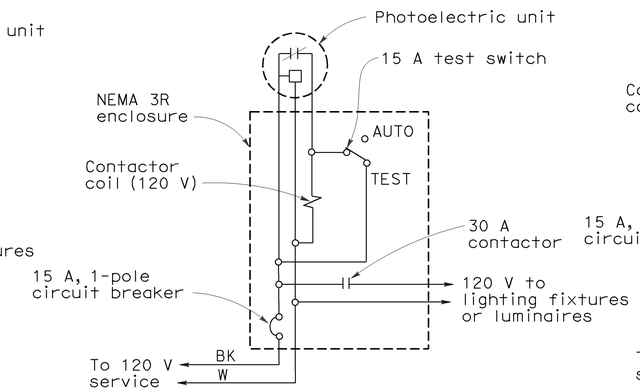

TYPE LC2 CONTROL

For 120 V unswitched circuit

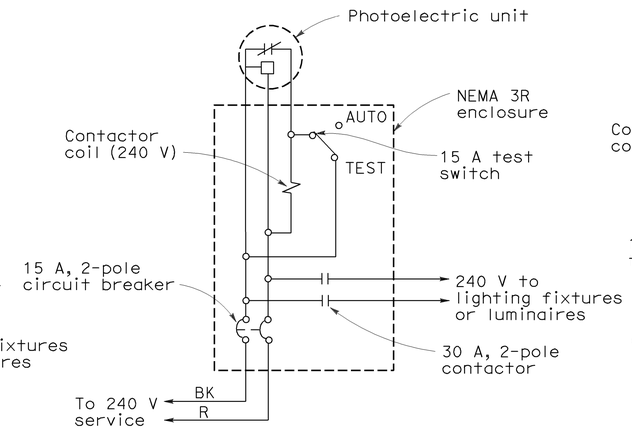

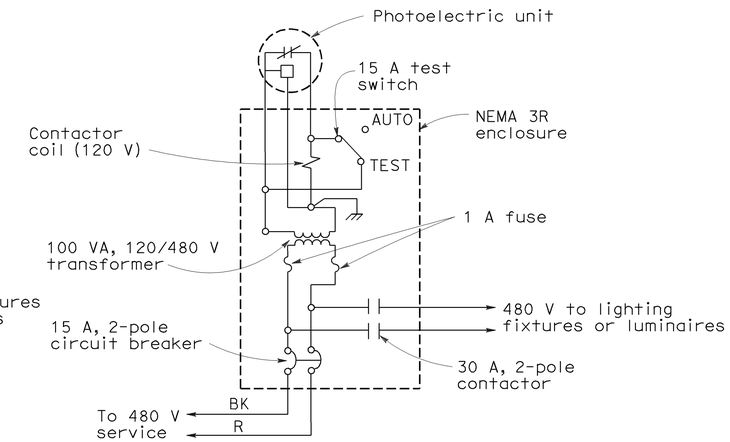

TYPE LC3 CONTROL

For 240 V and 480 V unswitched circuits

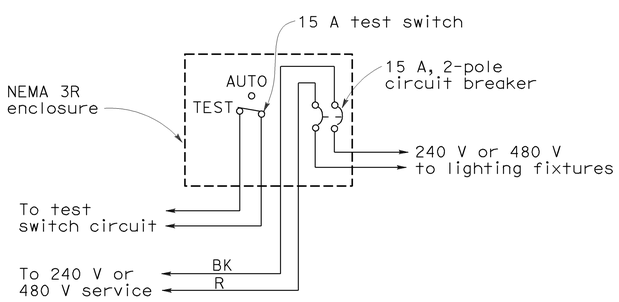

TYPE SC1 CONTROL

For 240 V or 480 V switched circuit, see Note 4 for Type SC1A

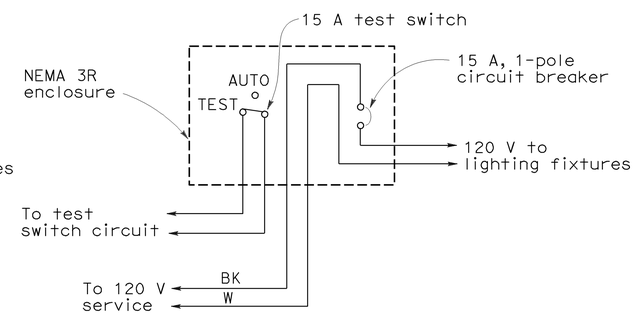

TYPE SC2 CONTROL

For 120 V switched circuit, see Note 4 for Type SC2A

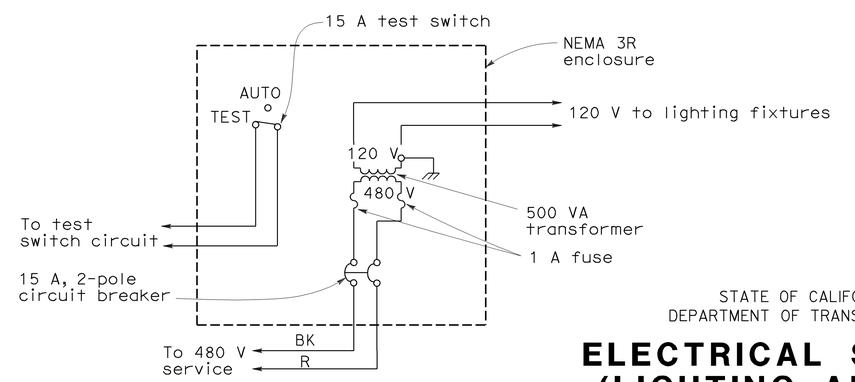

TYPE SC3 CONTROL

For 480 V switched sign circuit, see Note 4 for Type SC3A

STATE OF CALIFORNIA
DEPARTMENT OF TRANSPORTATION

ELECTRICAL SYSTEMS (LIGHTING AND SIGN ILLUMINATION CONTROL)

NO SCALE

RSP ES-15D DATED OCTOBER 5, 2007 SUPERCEDES STANDARD PLAN ES-15D DATED MAY 1, 2006 - PAGE 472 OF THE STANDARD PLANS BOOK DATED MAY 2006.

REVISED STANDARD PLAN RSP ES-15D

9-10-07

DIST	COUNTY	ROUTE	POST MILES TOTAL PROJECT	SHEET NO.	TOTAL SHEETS
03	Sut	20	11.2/17.0	29	31

Randell D. Hiatt
REGISTERED CIVIL ENGINEER

June 6, 2008
PLANS APPROVAL DATE

REGISTERED PROFESSIONAL ENGINEER
Randell D. Hiatt
No. C50200
Exp. 6-30-09
CIVIL
STATE OF CALIFORNIA

The State of California or its officers or agents shall not be responsible for the accuracy or completeness of electronic copies of this plan sheet.

To accompany plans dated July 26, 2010

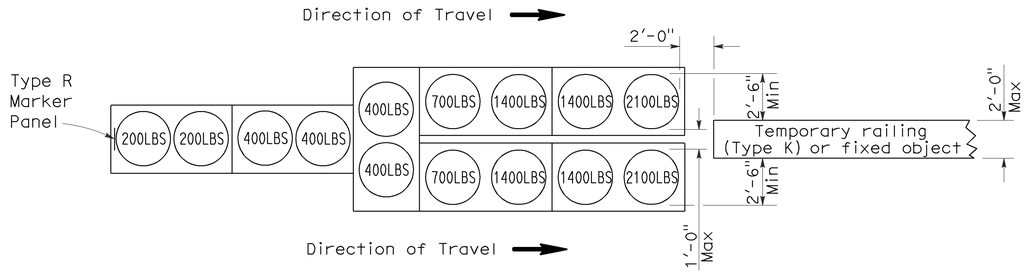

ARRAY 'TU14'

Approach speed 45 mph or more

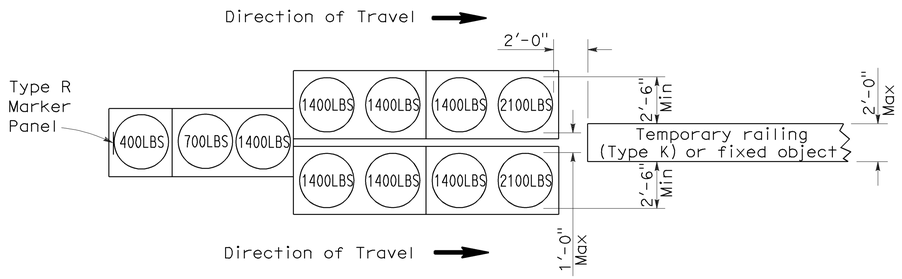

ARRAY 'TU11'

Approach speed less than 45 mph

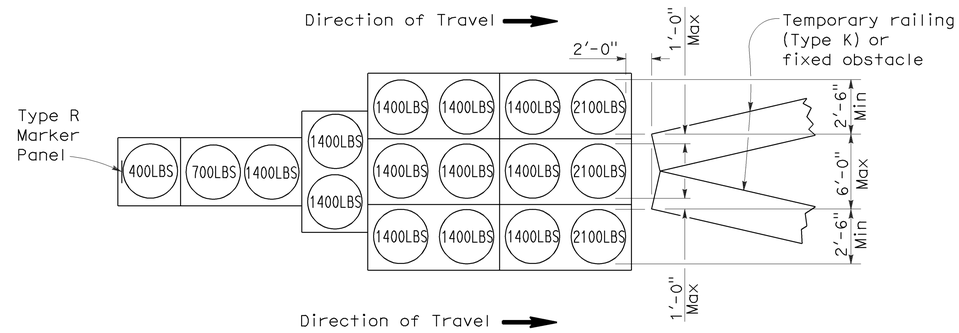

ARRAY 'TU17'

Approach speed less than 45 mph

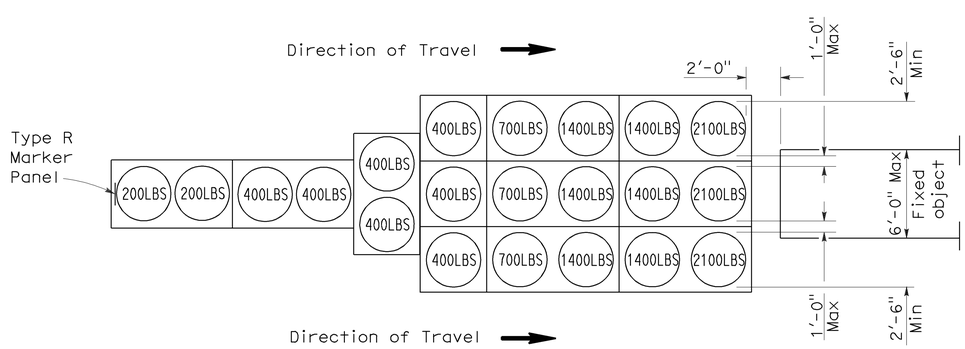

ARRAY 'TU21'

Approach speed 45 mph or more

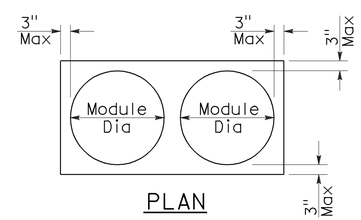

PLAN

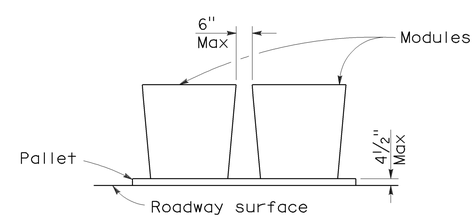

ELEVATION

CRASH CUSHION PALLET DETAIL

See Note 7

NOTES:

1. (XXX) Indicates sand filled module location and weight of sand in pounds for each module. Module spacing is based on the greater diameter of the module.
2. All sand weights are nominal.
3. Temporary crash cushion arrays shall not encroach on the traveled way.
4. Place the top of Type R marker panel 1" below the module lid.
5. Refer to Standard Plan A73B for marker details.
6. Approach speeds indicated conform to NCHRP 350 Report criteria.
7. Use of pallets is optional.

STATE OF CALIFORNIA
DEPARTMENT OF TRANSPORTATION

TEMPORARY CRASH CUSHION, SAND FILLED (UNIDIRECTIONAL)

NO SCALE

RSP T1A DATED JUNE 6, 2008 SUPERSEDES STANDARD PLAN T1A
DATED MAY 1, 2006 - PAGE 211 OF THE STANDARD PLANS BOOK DATED MAY 2006.

REVISED STANDARD PLAN RSP T1A

2006 REVISED STANDARD PLAN RSP T1A

DIST	COUNTY	ROUTE	POST MILES TOTAL PROJECT	SHEET NO.	TOTAL SHEETS
03	Sut	20	11.2/17.0	30	31

Randell D. Hiatt
REGISTERED CIVIL ENGINEER

June 6, 2008
PLANS APPROVAL DATE

REGISTERED PROFESSIONAL ENGINEER
Randell D. Hiatt
No. C50200
Exp. 6-30-09
CIVIL
STATE OF CALIFORNIA

The State of California or its officers or agents shall not be responsible for the accuracy or completeness of electronic copies of this plan sheet.

To accompany plans dated July 26, 2010

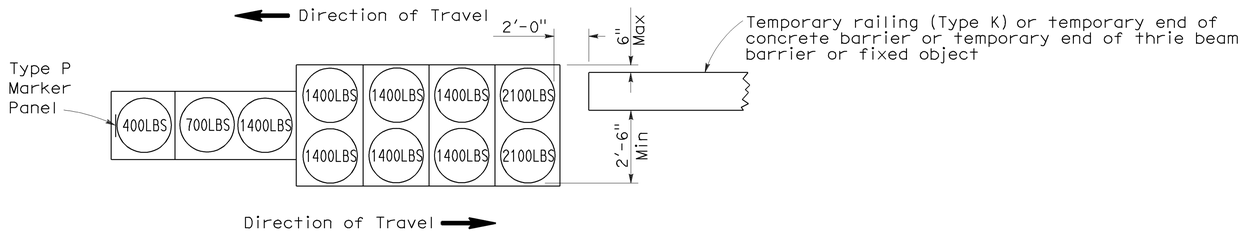

ARRAY 'TB11'

Approach speed less than 45 mph

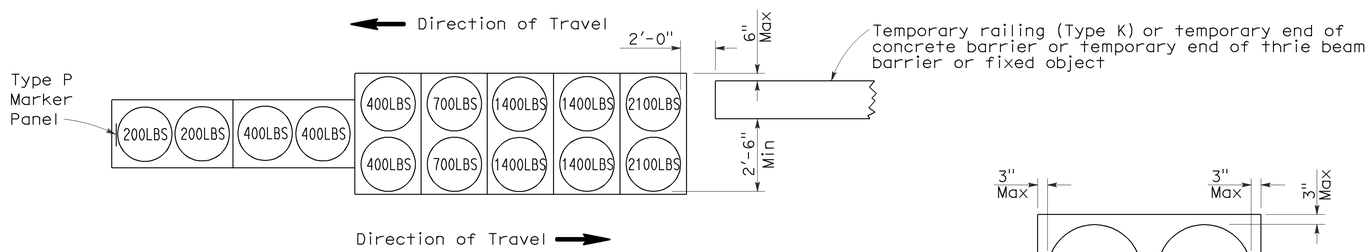

ARRAY 'TB14'

Approach speed 45 mph or more

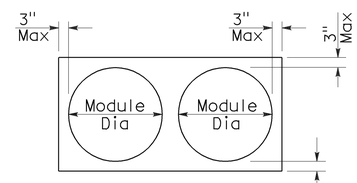

PLAN

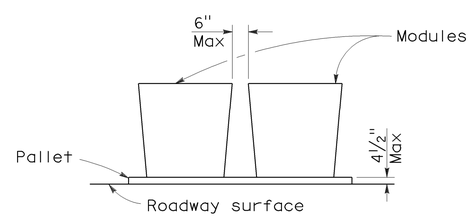

ELEVATION

CRASH CUSHION PALLET DETAIL

See Note 7

NOTES:

1. (XXX) Indicates sand filled module location and weight of sand in pounds for each module. Module spacing is based on the greater diameter of the module.
2. All sand weights are nominal.
3. Temporary crash cushion arrays shall not encroach on the traveled way.
4. Place the Type P marker panel so that the bottom of the panel rests upon the pallet.
5. Refer to Standard Plan A73B for marker details.
6. Approach speeds indicated conform to NCHRP 350 Report criteria.
7. Use of pallets is optional.

STATE OF CALIFORNIA
DEPARTMENT OF TRANSPORTATION

TEMPORARY CRASH CUSHION, SAND FILLED (BIDIRECTIONAL)

NO SCALE

RSP T1B DATED JUNE 6, 2008 SUPERSEDES STANDARD PLAN T1B
DATED MAY 1, 2006 - PAGE 212 OF THE STANDARD PLANS BOOK DATED MAY 2006.

REVISED STANDARD PLAN RSP T1B

2006 REVISED STANDARD PLAN RSP T1B

5-15-08

DIST	COUNTY	ROUTE	POST MILES TOTAL PROJECT	SHEET NO.	TOTAL SHEETS
03	Sut	20	11.2/17.0	31	31

Randell D. Hiatt
REGISTERED CIVIL ENGINEER

June 6, 2008
PLANS APPROVAL DATE

REGISTERED PROFESSIONAL ENGINEER
Randell D. Hiatt
No. C50200
Exp. 6-30-09
CIVIL
STATE OF CALIFORNIA

The State of California or its officers or agents shall not be responsible for the accuracy or completeness of electronic copies of this plan sheet.

To accompany plans dated July 26, 2010

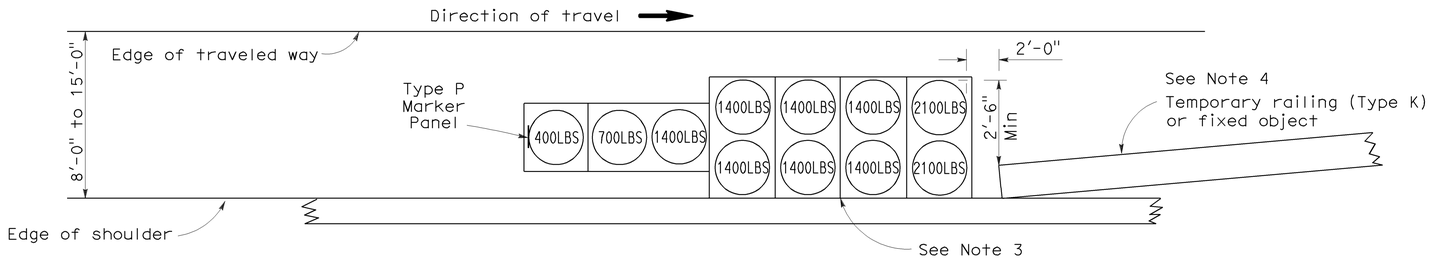

ARRAY 'TS11'

Approach speed less than 45 mph
See Note 9

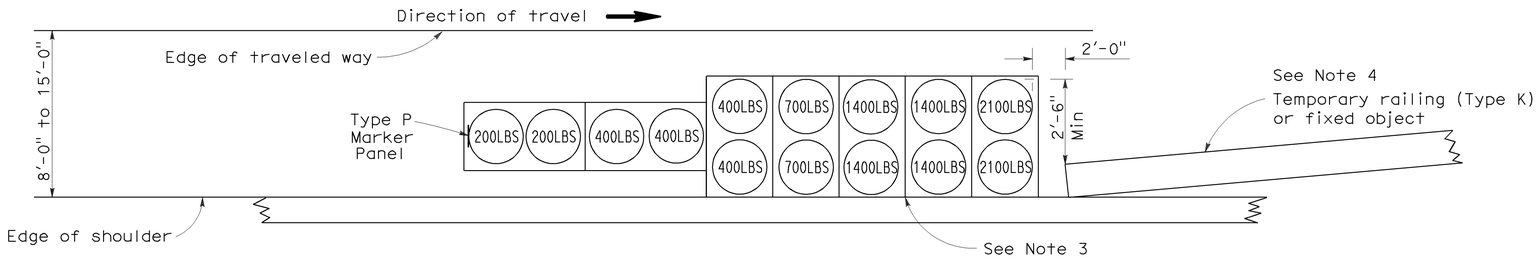

ARRAY 'TS14'

Approach speed 45 mph or more
See Note 9

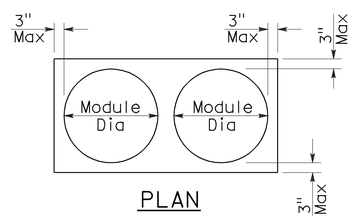

PLAN

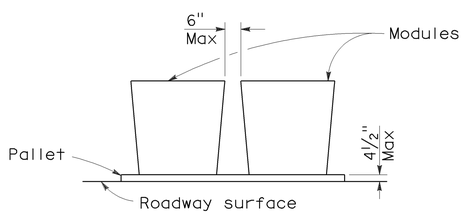

ELEVATION

CRASH CUSHION PALLET DETAIL

See Note 11

NOTES:

1. (XXX) Indicates sand filled module location and weight of sand in pounds for each module. Module spacing is based on the greater diameter of the module.
2. All sand weights are nominal.
3. The temporary crash cushion arrays shown on this plan shall be used only in locations where there will be traffic on one side of the temporary crash cushion array.
4. If the fixed object or approach end of the temporary railing is less than 15'-0" from the edge of traveled way, a temporary crash cushion is required in a construction or work zone.
5. Temporary crash cushion arrays shall not encroach on the traveled way.
6. Arrays for median shoulders shall conform to details shown on this plan for outside shoulders.
7. Place the Type P marker panel so that the bottom of the panel rests upon the pallet and faces traffic.
8. Refer to Standard Plan A73B for marker details.
9. For shoulder widths less than 8'-0", appropriate approved crash cushion protection, other than sand filled modules, shall be provided at fixed objects and at approach ends of temporary railing. The specific type of crash cushion shall be as shown on the project plans or as specified in the Special Provisions, or if not shown on the project plans or specified in the Special Provisions, shall be as approved by the Engineer.
10. Approach speeds indicated conform to NCHRP 350 Report criteria.
11. Use of pallets is optional.

STATE OF CALIFORNIA
DEPARTMENT OF TRANSPORTATION

TEMPORARY CRASH CUSHION, SAND FILLED (SHOULDER INSTALLATIONS)

NO SCALE

RSP T2 DATED JUNE 6, 2008 SUPERSEDES STANDARD PLAN T2
DATED MAY 1, 2006 - PAGE 213 OF THE STANDARD PLANS BOOK DATED MAY 2006.

REVISED STANDARD PLAN RSP T2

2006 REVISED STANDARD PLAN RSP T2

5-15-08