STP-P099(536)E

Dist	COUNTY	ROUTE	KILOMETER POST TOTAL PROJECT	SHEET No.	TOTAL SHEETS
03	Sut	99	T49.2/R51.8	1	88

STATE OF CALIFORNIA
DEPARTMENT OF TRANSPORTATION

PROJECT PLANS FOR CONSTRUCTION ON
STATE HIGHWAY
IN SUTTER COUNTY
IN AND NEAR YUBA CITY
FROM ROUTE 20
TO 1.4 KM OF QUEENS AVENUE OVERCROSSING

TO BE SUPPLEMENTED BY STANDARD PLANS DATED JULY 2004

INDEX OF SHEETS

SHEET No.	DESCRIPTION
1	TITLE AND LOCATION MAP
2-6	TEMPORARY WATER POLLUTION CONTROL DETAILS
7	CONSTRUCTION AREA SIGNS
8-9	SUMMARY OF QUANTITIES
10-11	PLANT LIST
12-18	ROADSIDE CLEARING PLAN
19-29	PLANTING PLAN
30-36	IRRIGATION REMOVAL PLAN
37-43	IRRIGATION PLAN
44-56	LANDSCAPE DETAILS
57-60	IRRIGATION QUANTITIES
61-65	ELECTRICAL SERVICE (IRRIGATION PLAN)
66-71	BOOSTER PUMP ELECTRICAL SYSTEM
72	BOOSTER PUMP SYSTEM
73-88	REVISED STANDARD PLANS

THE STANDARD PLANS LIST APPLICABLE TO THIS CONTRACT IS INCLUDED IN THE NOTICE TO BIDDERS AND SPECIAL PROVISIONS BOOK.

Caltrans Metric

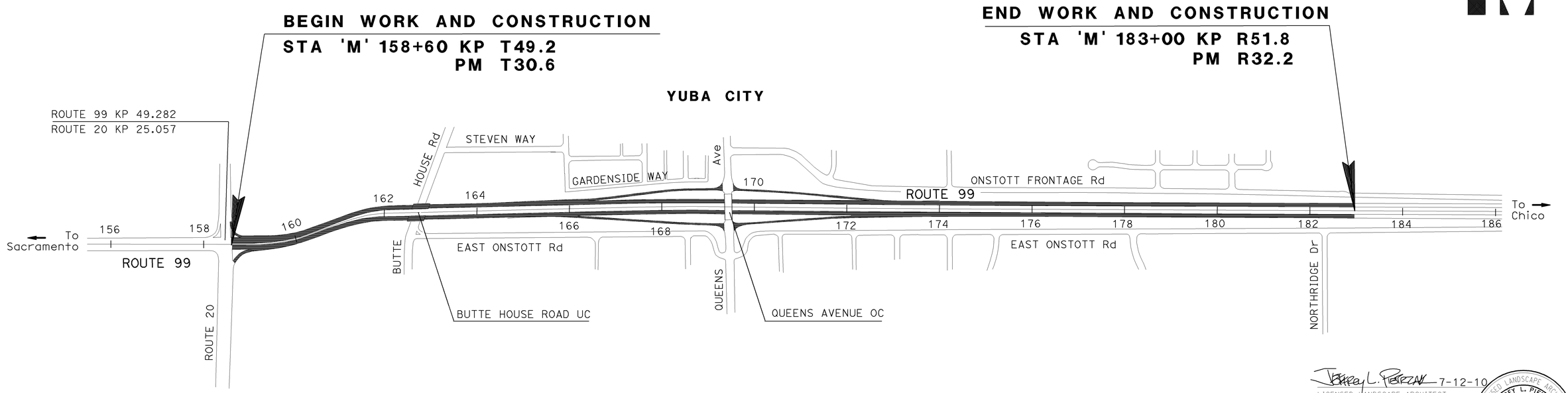

7-12-10
LICENSED LANDSCAPE ARCHITECT

July 26, 2010
PLANS APPROVAL DATE

LICENSED LANDSCAPE ARCHITECT
JEFFREY L. PIETRZAK
No. 4457
Signature
12-31-11
Renewal Date
7-12-10
Date
STATE OF CALIFORNIA

THE STATE OF CALIFORNIA OR ITS OFFICERS OR AGENTS SHALL NOT BE RESPONSIBLE FOR THE ACCURACY OR COMPLETENESS OF ELECTRONIC COPIES OF THIS PLAN SHEET.

PROJECT MANAGER: MIKE BARTLETT
SENIOR LANDSCAPE ARCHITECT: KENNETH MURRAY

THE CONTRACTOR SHALL POSSESS THE CLASS (OR CLASSES) OF LICENSE AS SPECIFIED IN THE "NOTICE TO BIDDERS."

NO SCALE

CONTRACT No.	03-1F5004
PROJECT ID	0300030036

LAST REVISION 00-00-00
DATE PLOTTED => 16-AUG-2010
TIME PLOTTED => 12:35

Dist	COUNTY	ROUTE	KILOMETER POST TOTAL PROJECT	SHEET No.	TOTAL SHEETS
03	Sut	99	T49.2/R51.8	2	88

Caltrans Metric

LICENSED LANDSCAPE ARCHITECT 7-12-10

7-26-10
PLANS APPROVAL DATE

LICENSED LANDSCAPE ARCHITECT JEFFREY L. PIETRZAK No. 4457 Signature 12-31-11 Renewal Date 5-1-10 Date STATE OF CALIFORNIA

THE STATE OF CALIFORNIA OR ITS OFFICERS OR AGENTS SHALL NOT BE RESPONSIBLE FOR THE ACCURACY OR COMPLETENESS OF ELECTRONIC COPIES OF THIS PLAN SHEET.

NOTES:

1. CONSTRUCT THE LENGTH OF EACH REACH SO THAT THE CHANGE IN BASE ELEVATION ALONG THE REACH DOES NOT EXCEED ½ THE HEIGHT OF THE LINEAR BERM. IN NO CASE SHALL THE REACH LENGTH EXCEED 150m.
2. PLACE GRAVEL BAGS TIGHTLY.
3. DIMENSIONS MAY VARY TO FIT FIELD CONDITIONS AND LOCATION TO BE DETERMINED BY THE ENGINEER.
4. TEMPORARY GRAVEL BAG BERM HEIGHT SHALL BE DETERMINED BY WATER ELEVATION IN THE DITCH AND A MINIMUM OF 3 BAGS HIGH.
5. THE END OF THE BERM SHALL BE TURNED UP SLOPE, 2 m MINIMUM.
6. CROSS BARRIERS SHALL BE A MINIMUM OF ½ AND A MAXIMUM OF 2/3 THE HEIGHT OF THE LINEAR BARRIER.
7. GRAVEL BAG ROW AND LAYERS SHALL BE STAGGERED TO ELIMINATE GAPS.

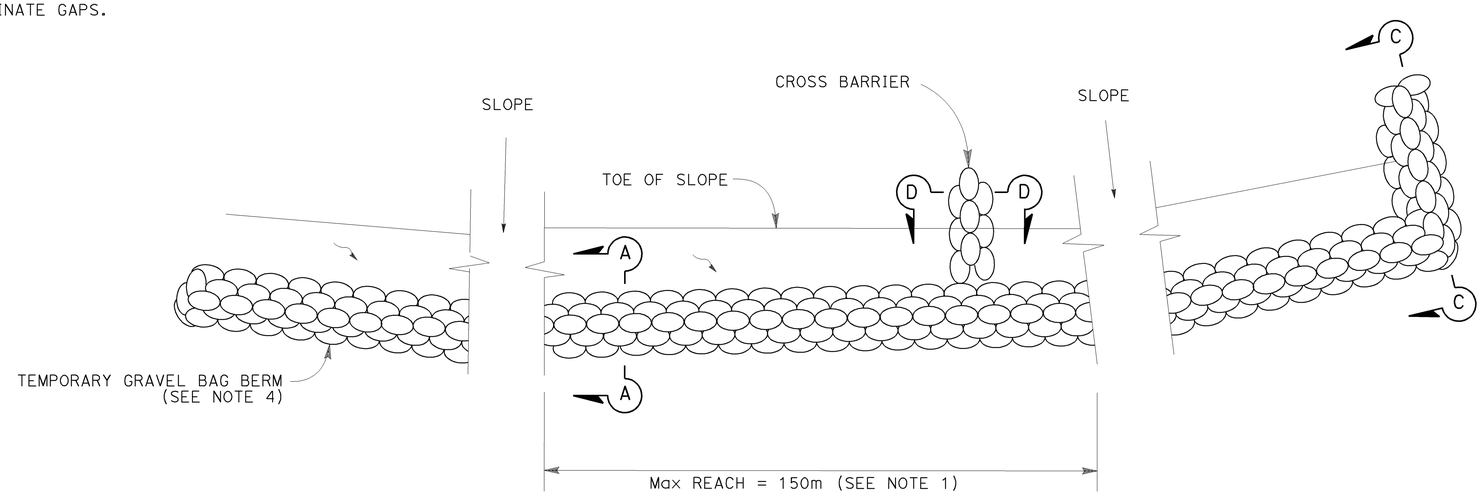

PLAN
TEMPORARY GRAVEL BAG BERM

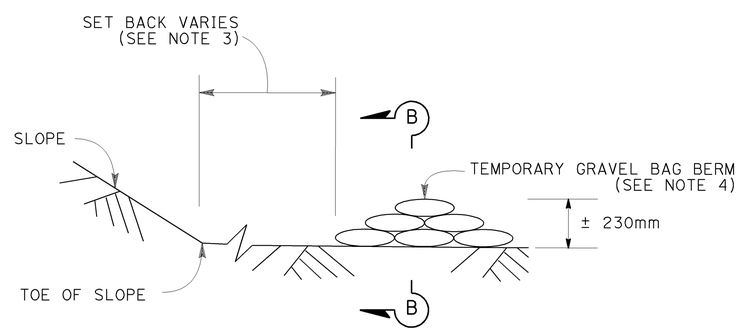

SECTION A-A

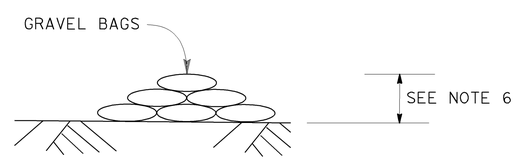

SECTION D-D

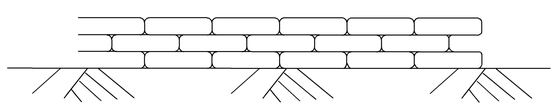

SECTION B-B

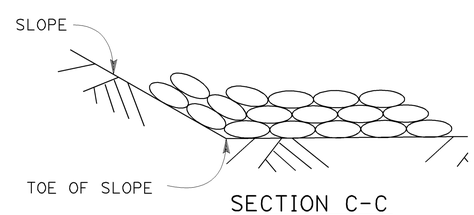

SECTION C-C

ALL DIMENSIONS ARE IN MILIMETERS
UNLESS OTHERWISE SHOWN

TEMPORARY WATER POLLUTION CONTROL DETAILS (TEMPORARY GRAVEL BAG BERM)

SCALE 1:500

WPCD-1

STATE OF CALIFORNIA - DEPARTMENT OF TRANSPORTATION
Caltrans
LANDSCAPE

SENIOR LANDSCAPE ARCHITECT: K. MURRAY
CALCULATED-DESIGNED BY: JEFFREY L. PIETRZAK
CHECKED BY: T. CHRIS JOHNSON
REVISED BY
DATE REVISED

LAST REVISION 7-14-10
DATE PLOTTED => 02-AUG-2010
TIME PLOTTED => 15:29

Dist	COUNTY	ROUTE	KILOMETER POST TOTAL PROJECT	SHEET No.	TOTAL SHEETS
03	Sut	99	T49.2/R51.8	3	88

Caltrans Metric

LICENSED LANDSCAPE ARCHITECT 7-12-10

7-26-10
PLANS APPROVAL DATE

LICENSED LANDSCAPE ARCHITECT JEFFREY L. PIETRZAK No. 4457 Signature 12-31-11 Renewal Date 5-1-10 Date STATE OF CALIFORNIA

THE STATE OF CALIFORNIA OR ITS OFFICERS OR AGENTS SHALL NOT BE RESPONSIBLE FOR THE ACCURACY OR COMPLETENESS OF ELECTRONIC COPIES OF THIS PLAN SHEET.

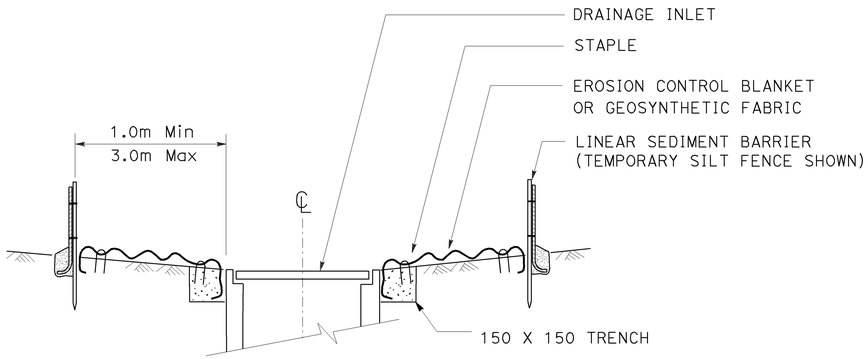

SECTION A-A

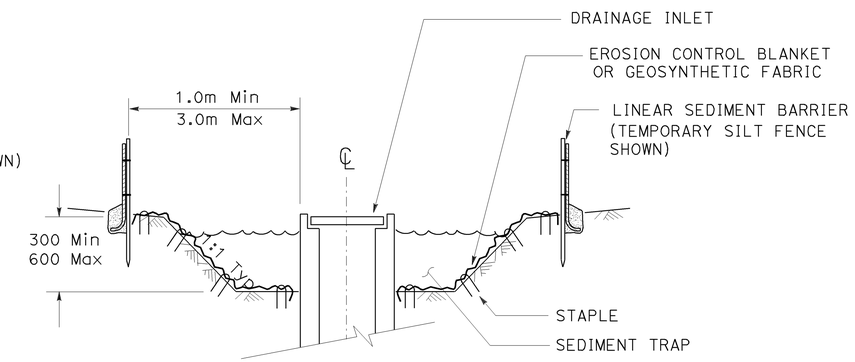

SECTION B-B

NOTES

1. SEE STANDARD PLAN T51 FOR TEMPORARY SILT FENCE.
2. DIMENSIONS MAY VARY TO FIT FIELD CONDITIONS.

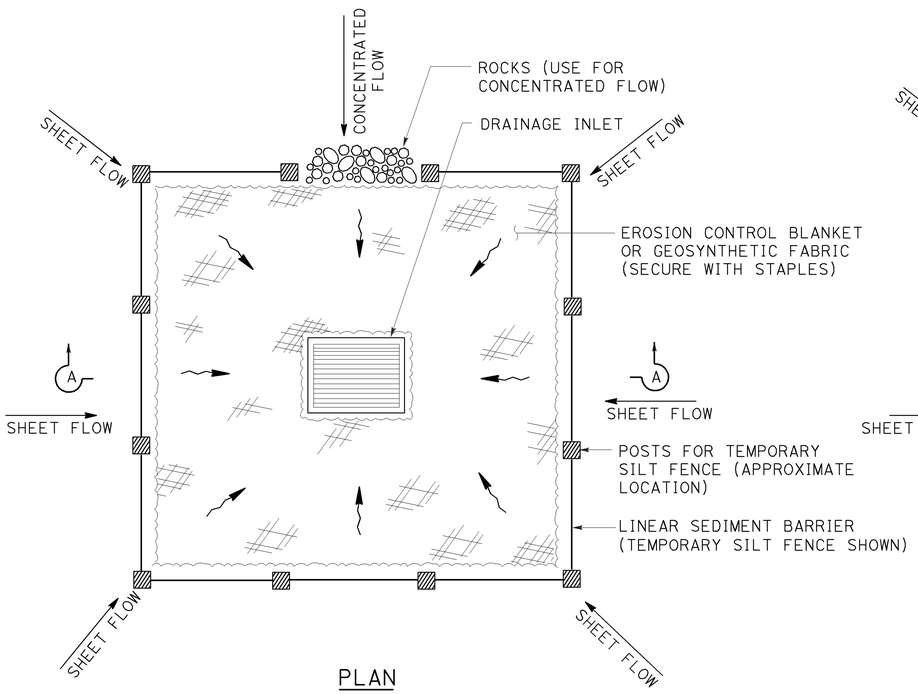

PLAN

TEMPORARY DRAINAGE INLET PROTECTION (TYPE 1)

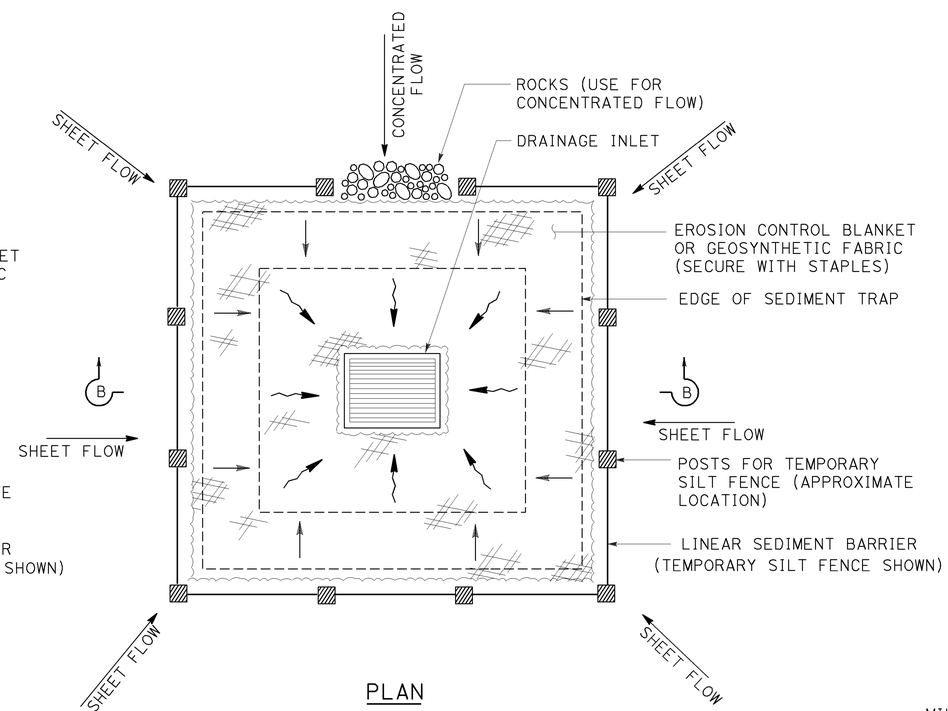

PLAN

TEMPORARY DRAINAGE INLET PROTECTION (TYPE 2) (EXCAVATED SEDIMENT TRAP)

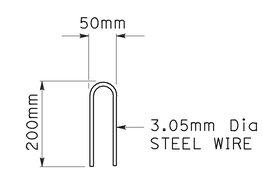

STAPLE DETAIL

ALL DIMENSIONS ARE IN MILLIMETERS UNLESS OTHERWISE SHOWN

TEMPORARY WATER POLLUTION CONTROL DETAILS (TEMPORARY DRAINAGE INLET PROTECTION)

NO SCALE

WPCD-2

STATE OF CALIFORNIA - DEPARTMENT OF TRANSPORTATION
Caltrans
LANDSCAPE
SENIOR LANDSCAPE ARCHITECT K. MURRAY
CALCULATED-DESIGNED BY JEFFREY L. PIETRZAK
CHECKED BY T. CHRIS JOHNSON
REVISED BY
DATE REVISED

LAST REVISION
DATE PLOTTED => 02-AUG-2010
TIME PLOTTED => 15:29

Dist	COUNTY	ROUTE	KILOMETER POST TOTAL PROJECT	SHEET No.	TOTAL SHEETS
03	Sut	99	T49.2/R51.8	4	88

Caltrans Metric

LICENSED LANDSCAPE ARCHITECT — 7-12-10

7-26-10
PLANS APPROVAL DATE

LICENSED LANDSCAPE ARCHITECT JEFFREY L. PIETRZAK No. 4457 Signature 12-31-11 Renewal Date 5-1-10 Date STATE OF CALIFORNIA

THE STATE OF CALIFORNIA OR ITS OFFICERS OR AGENTS SHALL NOT BE RESPONSIBLE FOR THE ACCURACY OR COMPLETENESS OF ELECTRONIC COPIES OF THIS PLAN SHEET.

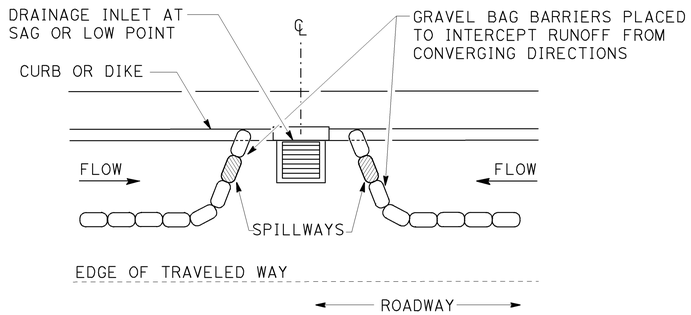

PLAN

CONFIGURATION FOR SAG POINT INLET (GRAVEL BAG BERM)

GRAVEL BAG BARRIER (TYPE 3A) SPACING TABLE

SLOPE OF ROADWAY (PERCENT)	1 to 3.9	4 to 5.9	6 to 7.9	8 to 10	10 +
INTERVAL BETWEEN BARRIERS (m)	30.0	22.5	15.0	7.5	4.0

FOR SLOPE OF LESS THAN 1%, INSTALL BARRIERS ONLY IF EROSION/SEDIMENT IS PREVALENT

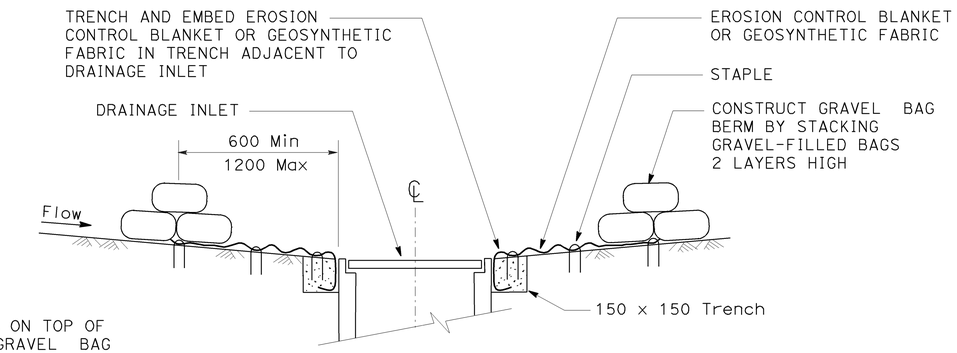

SECTION A-A

NOTES

1. PLACE SAFETY CONES ADJACENT TO DRAINAGE INLET PROTECTION.
2. DIMENSIONS MAY VARY TO FIT FIELD CONDITIONS.
3. INSTALL A MINIMUM OF 3 GRAVEL BAG BARRIERS UPSTREAM OF EACH DRAINAGE INLET TO BE PROTECTED.
4. POSITION EROSION CONTROL BLANKET OR GEOSYNTHETIC FABRIC AT EDGE OF CONCRETE APRON AND SECURE IN TRENCH.
5. EROSION CONTROL BLANKET/GEOSYNTHETIC FABRIC IS NOT REQUIRED IF THE AREA ADJACENT TO THE DRAINAGE INLET IS VEGETATED OR PAVED.

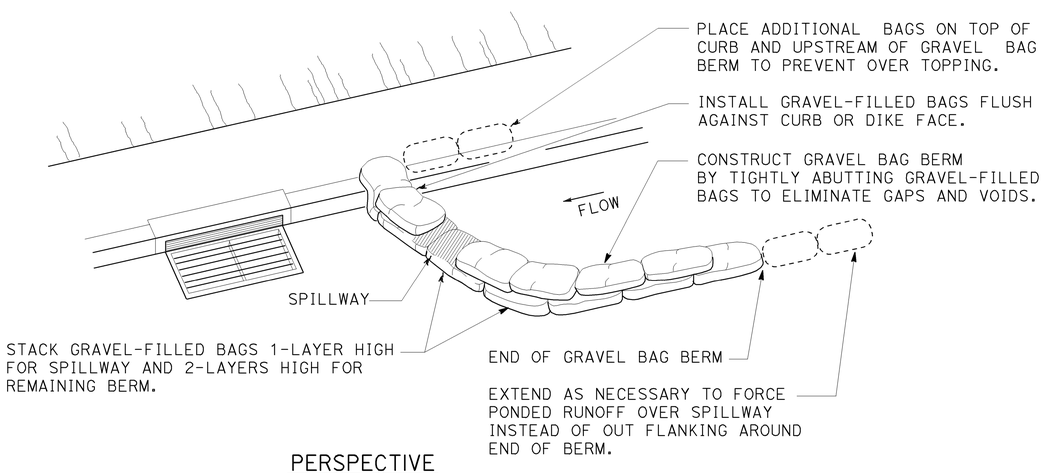

PERSPECTIVE

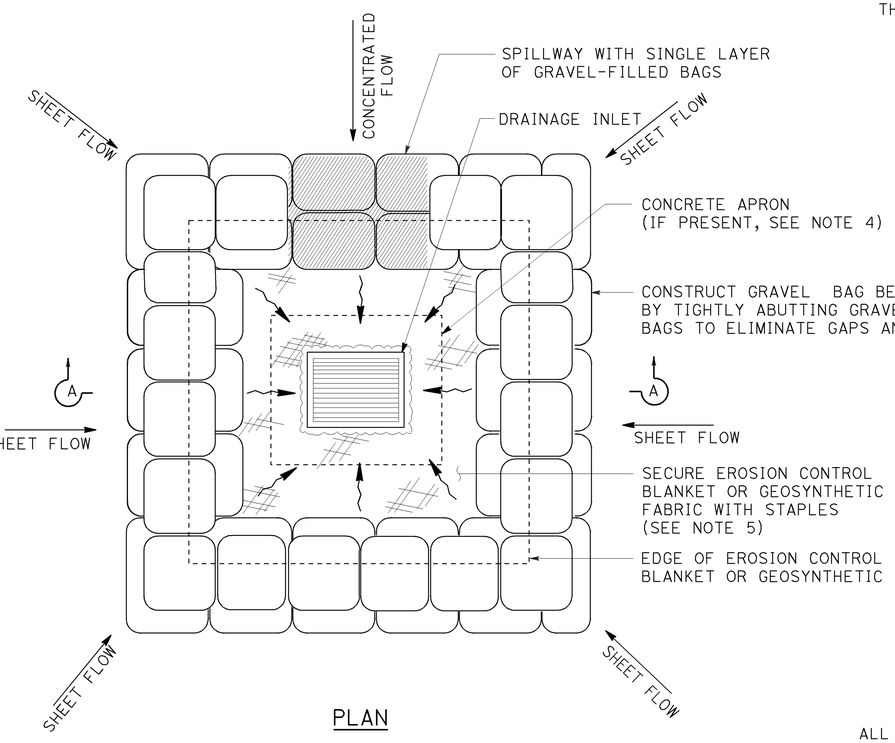

PLAN

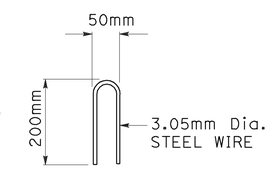

STAPLE DETAIL

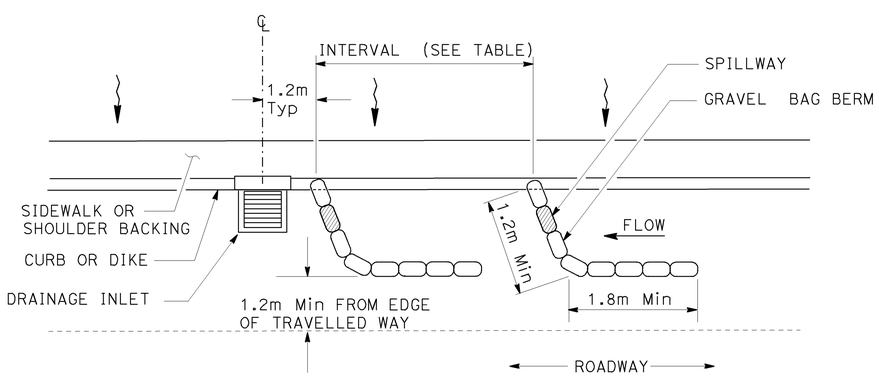

PLAN

TEMPORARY DRAINAGE INLET PROTECTION (TYPE 3A) (GRAVEL BAG BERM)

TEMPORARY DRAINAGE INLET PROTECTION (TYPE 3B)

ALL DIMENSIONS ARE IN MILLIMETERS UNLESS OTHERWISE SHOWN

TEMPORARY WATER POLLUTION CONTROL DETAILS (TEMPORARY DRAINAGE INLET PROTECTION)

NO SCALE

WPCD-3

STATE OF CALIFORNIA - DEPARTMENT OF TRANSPORTATION
Caltrans
LANDSCAPE
SENIOR LANDSCAPE ARCHITECT K. MURRAY
CALCULATED-DESIGNED BY JEFFREY L. PIETRZAK
CHECKED BY T. CHRIS JOHNSON
REVISED BY
DATE REVISED

LAST REVISION DATE PLOTTED => 02-AUG-2010 TIME PLOTTED => 15:29

Dist	COUNTY	ROUTE	KILOMETER POST TOTAL PROJECT	SHEET No.	TOTAL SHEETS
03	Sut	99	T49.2/R51.8	5	88

Jeffrey L. Pietrzak 7-12-10
LICENSED LANDSCAPE ARCHITECT

7-26-10
PLANS APPROVAL DATE

LICENSED LANDSCAPE ARCHITECT JEFFREY L. PIETRZAK No. 4457 Signature 12-31-11 Renewal Date 5-1-10 Date STATE OF CALIFORNIA

THE STATE OF CALIFORNIA OR ITS OFFICERS OR AGENTS SHALL NOT BE RESPONSIBLE FOR THE ACCURACY OR COMPLETENESS OF ELECTRONIC COPIES OF THIS PLAN SHEET.

Caltrans Metric

FLEXIBLE SEDIMENT BARRIER SPACING TABLE

SLOPE OF ROADWAY (PERCENT)	0 to 0.9	1 to 1.9	2 to 2.9	3 to 4	5 +
INTERVAL BETWEEN BARRIERS (m)	15.24	10.67	9.14	7.62	6.10
ANGLE FROM FACE OF CURB (DEGREES)	70	70	70	45	45
SUGGESTED BARRIER LENGTH (m)	1.82	1.82	1.82	1.82	1.82

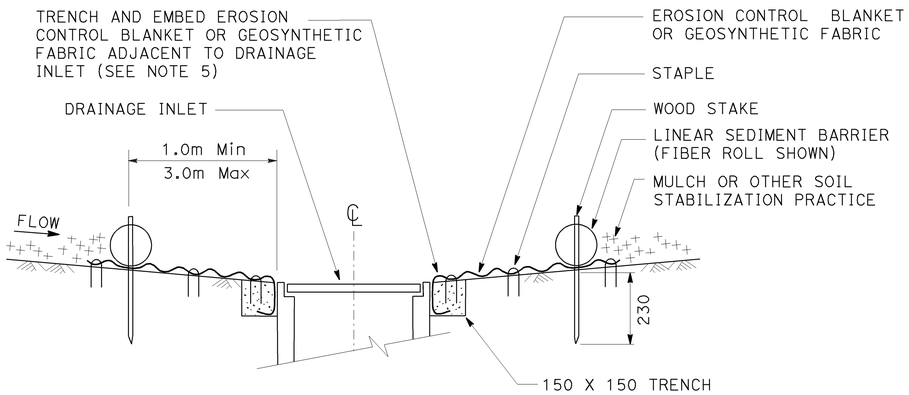

SECTION A-A

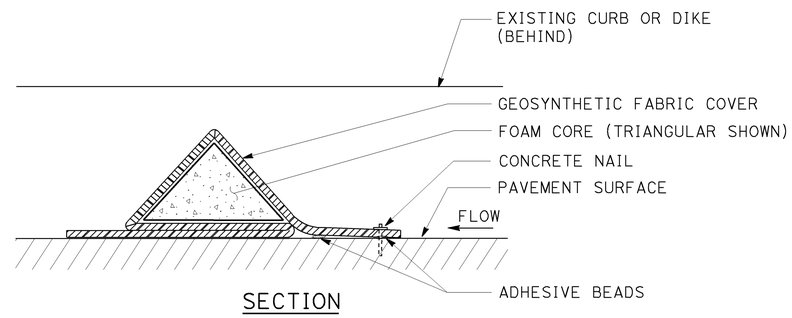

SECTION

FLEXIBLE SEDIMENT BARRIER DETAIL
FOAM BARRIER SHOWN

NOTES

1. SEE STANDARD PLAN T51 FOR TEMPORARY SILT FENCE.
2. DIMENSIONS MAY VARY TO FIT FIELD CONDITIONS.
3. INSTALL A MINIMUM OF 3 FLEXIBLE SEDIMENT BARRIERS UPSTREAM OF EACH DRAINAGE INLET TO BE PROTECTED.
4. POSITION EROSION CONTROL BLANKET OR GEOSYNTHETIC FABRIC AT EDGE OF CONCRETE APRON AND SECURE IN TRENCH.
5. EROSION CONTROL BLANKET/GEOSYNTHETIC FABRIC IS NOT REQUIRED IF THE AREA ADJACENT TO THE DRAINAGE INLET IS VEGETATED.

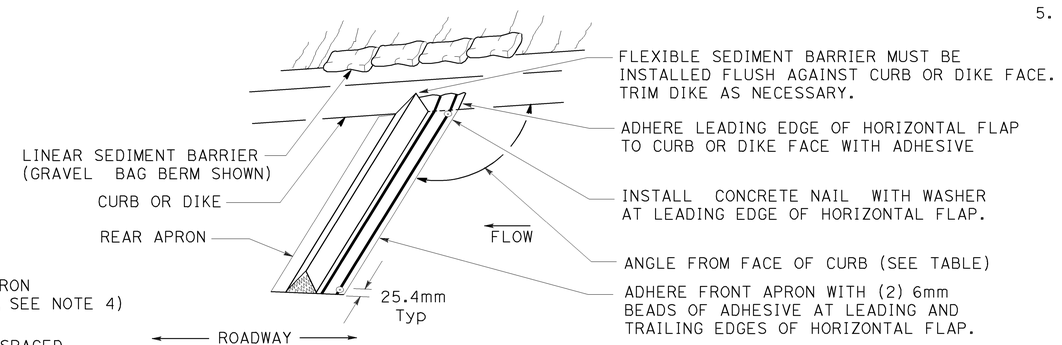

PERSPECTIVE

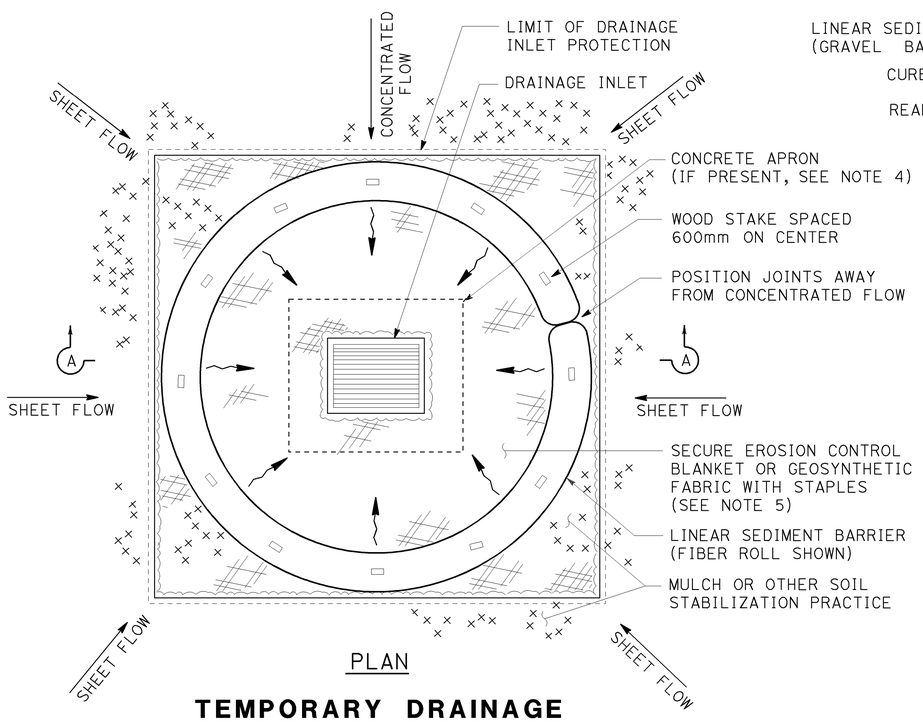

PLAN

TEMPORARY DRAINAGE INLET PROTECTION (TYPE 4A) (FIBER ROLLS)

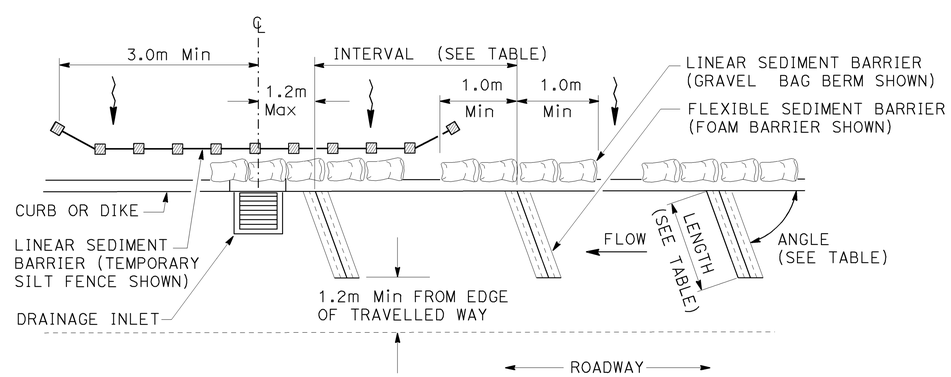

PLAN

TEMPORARY DRAINAGE INLET PROTECTION (TYPE 4B) FLEXIBLE SEDIMENT BARRIER

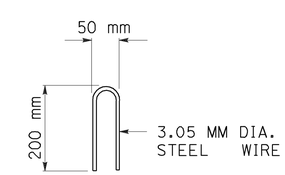

STAPLE DETAIL

ALL DIMENSIONS ARE IN MILLIMETERS UNLESS OTHERWISE SHOWN

TEMPORARY WATER POLLUTION CONTROL DETAILS (TEMPORARY DRAINAGE INLET PROTECTION)

NO SCALE

WPCD-4

STATE OF CALIFORNIA - DEPARTMENT OF TRANSPORTATION
Caltrans
LANDSCAPE
SENIOR LANDSCAPE ARCHITECT K. MURRAY
CALCULATED-DESIGNED BY JEFFREY L. PIETRZAK
CHECKED BY T. CHRIS JOHNSON
REVISED BY
DATE REVISED

LAST REVISION DATE PLOTTED => 02-AUG-2010
TIME PLOTTED => 15:29

Dist	COUNTY	ROUTE	KILOMETER POST TOTAL PROJECT	SHEET No.	TOTAL SHEETS
03	Sut	99	T49.2/R51.8	6	88

Caltrans Metric

Jeffrey L. Pietrzak 7-12-10
LICENSED LANDSCAPE ARCHITECT

7-26-10
PLANS APPROVAL DATE

LICENSED LANDSCAPE ARCHITECT JEFFREY L. PIETRZAK No. 4457 Signature 12-31-11 Renewal Date 5-1-10 Date STATE OF CALIFORNIA

THE STATE OF CALIFORNIA OR ITS OFFICERS OR AGENTS SHALL NOT BE RESPONSIBLE FOR THE ACCURACY OR COMPLETENESS OF ELECTRONIC COPIES OF THIS PLAN SHEET.

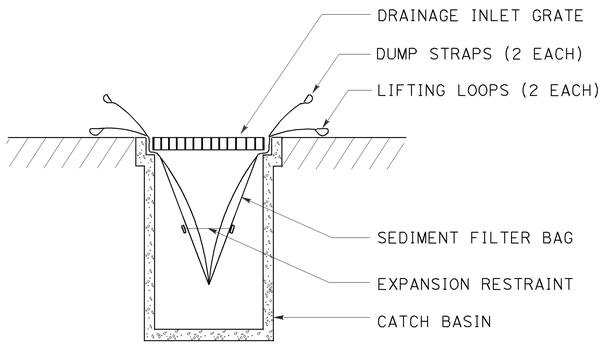

SECTION B-B

SEDIMENT FILTER BAG DETAIL

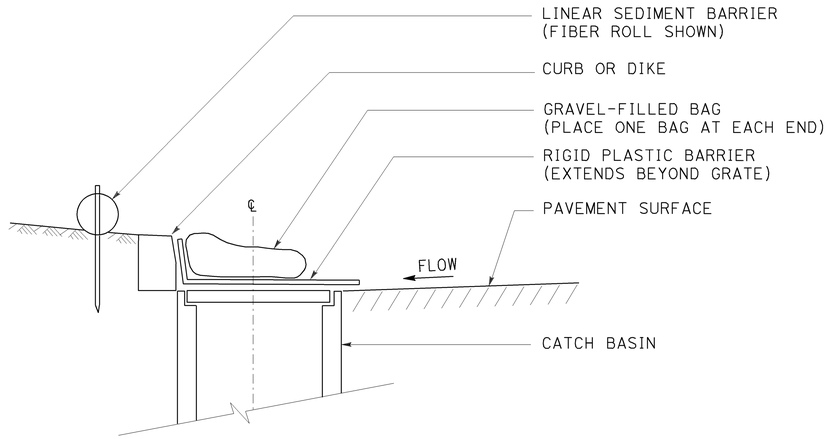

SECTION

TEMPORARY DRAINAGE INLET PROTECTION (TYPE 6A) (CATCH BASIN WITH GRATE)

NOTES

1. SEE STD PLAN T51 FOR TEMPORARY SILT FENCE.
2. DIMENSIONS MAY VARY TO FIT FIELD CONDITIONS.

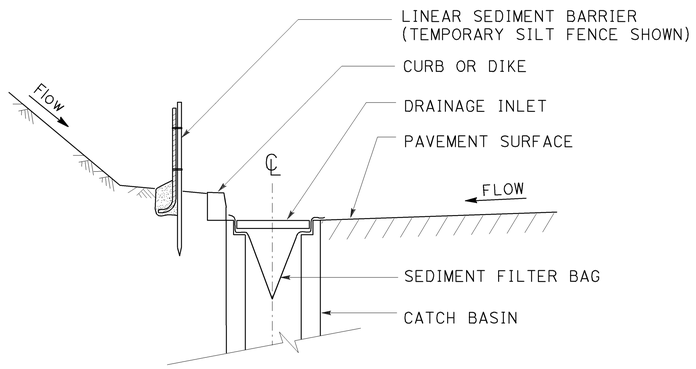

SECTION A-A

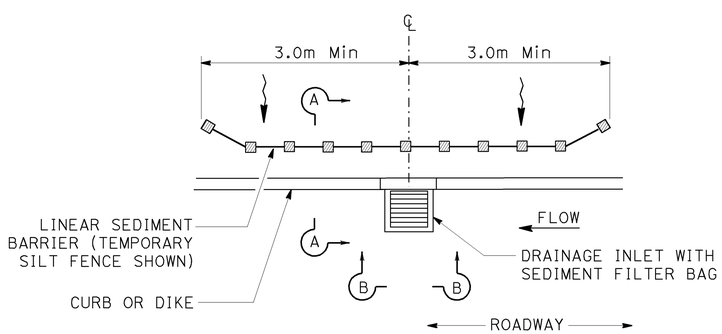

PLAN

TEMPORARY DRAINAGE INLET PROTECTION (TYPE 5) (SEDIMENT FILTER BAG)

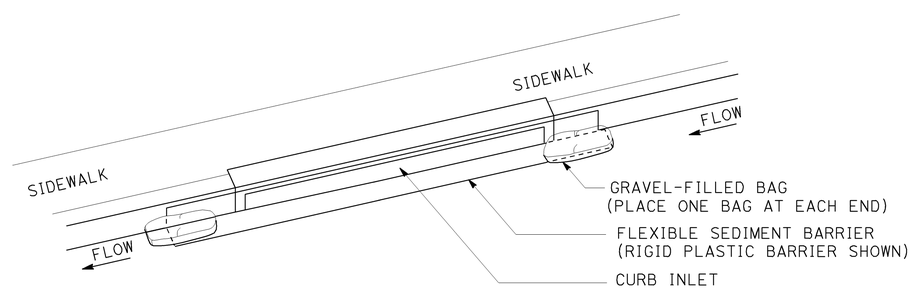

PERSPECTIVE

TEMPORARY DRAINAGE INLET PROTECTION (TYPE 6B) (CURB INLET WITHOUT GRATE)

ALL DIMENSIONS ARE IN MILLIMETERS UNLESS OTHERWISE SHOWN

TEMPORARY WATER POLLUTION CONTROL DETAILS (TEMPORARY DRAINAGE INLET PROTECTION)

NO SCALE

WPCD-5

STATE OF CALIFORNIA - DEPARTMENT OF TRANSPORTATION
Caltrans
LANDSCAPE

SENIOR LANDSCAPE ARCHITECT: K. MURRAY
CALCULATED-DESIGNED BY: JEFFREY L. PIETRZAK
CHECKED BY: T. CHRIS JOHNSON
REVISED BY
DATE REVISED

LAST REVISION
DATE PLOTTED => 02-AUG-2010
TIME PLOTTED => 15:29

Dist	COUNTY	ROUTE	KILOMETER POST TOTAL PROJECT	SHEET No.	TOTAL SHEETS
03	Sut	99	T49.2/R51.8	7	88

Caltrans Metric

John R. Keber 6-24-10
REGISTERED CIVIL ENGINEER DATE

7-26-10
PLANS APPROVAL DATE

REGISTERED PROFESSIONAL ENGINEER
John R. Keber
No. 40048
Exp. 12-31-11
CIVIL
STATE OF CALIFORNIA

THE STATE OF CALIFORNIA OR ITS OFFICERS OR AGENTS SHALL NOT BE RESPONSIBLE FOR THE ACCURACY OR COMPLETENESS OF ELECTRONIC COPIES OF THIS PLAN SHEET.

STATIONARY MOUNTED CONSTRUCTION AREA SIGNS

SIGN LETTER	SIGN CODE		PANEL SIZE	SIGN MESSAGE	NUMBER OF POST AND SIZE	NUMBER OF SIGNS
	FEDERAL	CALIFORNIA				
A	W20-1	C23	1524 x 1524	ROAD WORK AHEAD	2-89 x 140	4
B		C14	1219 x 610	END ROAD WORK	1-89 x 140	4
C	W20-1	C23	1219 x 1219	ROAD WORK AHEAD	1-140 x 140	2

NOTES:

1. ALL DIMENSIONS ARE IN MILLIMETERS UNLESS OTHERWISE SHOWN.
2. EXACT SIGN LOCATIONS TO BE DETERMINED BY THE ENGINEER.
3. THIS PLAN ACCURATE FOR CONSTRUCTION AREA SIGN WORK ONLY.

LEGEND

(X) CONSTRUCTION AREA SIGN LETTER

SIGN - SINGLE POST

SIGN - TWO POST

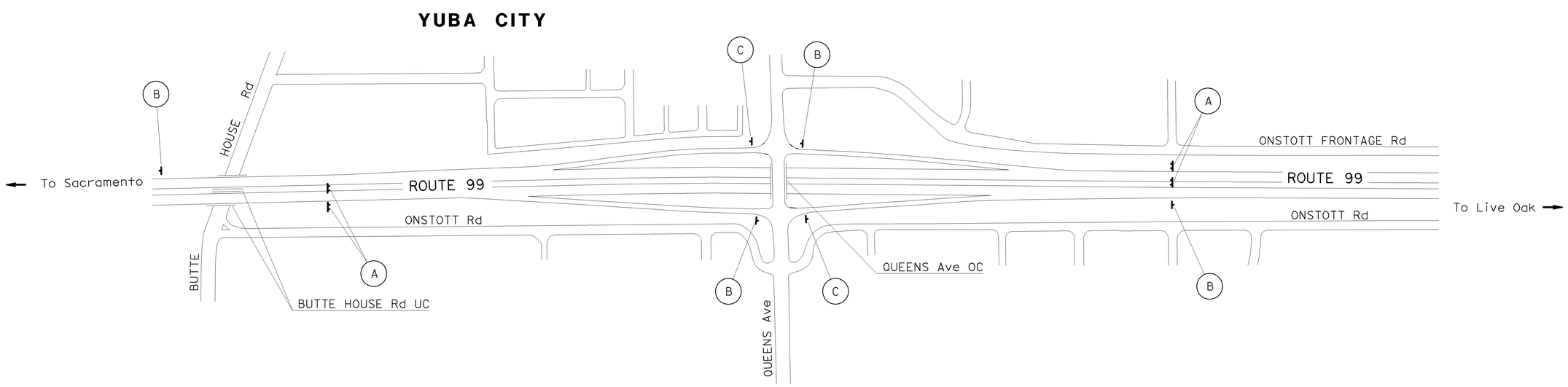

CONSTRUCTION AREA SIGNS

NO SCALE

CS-1

STATE OF CALIFORNIA - DEPARTMENT OF TRANSPORTATION
Caltrans
TRAFFIC

FUNCTIONAL SUPERVISOR: JOSEPH W. HORTON
CALCULATED-DESIGNED BY: JACK KEMMERLY
CHECKED BY: JOHN KEBER
REVISED BY
DATE REVISED

LAST REVISION 5-25-10
DATE PLOTTED => 02-AUG-2010
TIME PLOTTED => 15:29

Dist	COUNTY	ROUTE	KILOMETER POST TOTAL PROJECT	SHEET No.	TOTAL SHEETS
03	Sut	99	T49.2/R51.8	8	88

Caltrans Metric

LICENSED LANDSCAPE ARCHITECT 7-12-10

7-26-10
PLANS APPROVAL DATE

LICENSED LANDSCAPE ARCHITECT JEFFREY L. PIETRZAK No. 4457 Signature 12-31-11 Renewal Date 5-1-10 Date STATE OF CALIFORNIA

THE STATE OF CALIFORNIA OR ITS OFFICERS OR AGENTS SHALL NOT BE RESPONSIBLE FOR THE ACCURACY OR COMPLETENESS OF ELECTRONIC COPIES OF THIS PLAN SHEET.

MULCH

BLANKET APPLICATION

SHEET	STATION LIMITS	LOC	(N) m^2 AREA	(N) m DEPTH	m^3 VOLUME
PP-8	M 158+65 TO M 159+00	Lt	198	0.08	16
PP-8	M 158+69 TO M 159+00	Rt	622	0.08	50
PP-1	M 159+00 TO M 159+81	Rt	530	0.08	43
PP-1	M 159+28 TO M 160+12	Lt	472	0.08	38
PP-1	M 159+88 TO M 159+96	Rt	30	0.08	3
PP-1	M 160+02 TO M 160+27	Rt	92	0.08	8
PP-1	M 160+18 TO M 160+74	Lt	540	0.08	44
PP-1	M 160+46 TO M 161+15	Rt	420	0.08	34
PP-1	M 160+82 TO M 161+29	Lt	660	0.08	53
PP-1	M 161+42 TO M 161+77	Rt	190	0.08	16
PP-1	M 161+47 TO M 161+74	Lt	200	0.08	16
PP-2	M 161+76 TO M 162+43	Rt	480	0.08	39
PP-9	M 162+28 TO M 162+54	Rt	210	0.08	17
PP-2	M 162+43 TO M 162+65	Lt	330	0.08	27
PP-9	M 162+53 TO M 162+64	-	85	0.08	7
PP-9	M 162+59 TO M 162+75	Lt	160	0.08	13
PP-9	M 162+75 TO M 162+90	Rt	145	0.08	12
PP-2	M 162+83 TO M 162+90	Rt	80	0.08	7
PP-9	M 162+84 TO M 162+97	-	110	0.08	9
PP-9	M 162+93 TO M 163+16	Lt	180	0.08	15
PP-2	M 163+02 TO M 163+25	Lt	260	0.08	21
PP-2	M 163+47 TO M 163+82	Lt	230	0.08	19
PP-2	M 164+14 TO M 164+77	Lt	470	0.08	38
PP-2	M 165+04 TO M 165+42	Lt	220	0.08	18
PP-3	M 165+65 TO Q1 169+00	Lt	1 525	0.08	122
PP-10	Q1 169+00 TO Q1 169+30	Lt	210	0.08	17
PP-3	Q2 166+44 TO Q2 169+00	Rt	2 000	0.08	160
PP-11	Q2 169+00 TO Q2 169+36	Rt	570	0.08	46
PP-3	M 167+72 TO M 169+35	Rt	2015	0.08	162
PP-3	M 167+76 TO M 169+34	Lt	1 960	0.08	157
PP-4	M 169+53 TO M 171+09	Lt	1 725	0.08	138
PP-4	M 169+54 TO M 170+73	Rt	1 230	0.08	99
PP-10	Q3 169+51 TO Q3 170+00	Lt	460	0.08	37
PP-4	Q3 170+00 TO Q3 171+90	Lt	1 620	0.08	130
PP-4	Q3 171+91 TO Q3 172+20	Lt	90	0.08	8
PP-4	Q3 172+25 TO Q3 172+88	Lt	270	0.08	22
PP-11	Q4 169+57 TO Q4 170+00	Rt	670	0.08	54
PP-4	Q4 170+00 TO Q4 171+16	Rt	1 020	0.08	82
PP-4	Q4 171+33 TO Q4 171+87	Rt	340	0.08	28
PP-4	Q4 172+12 TO Q4 172+76	Rt	610	0.08	49
PP-4	Q4 172+83 TO M 173+25	Rt	310	0.08	25
PP-5	M 173+25 TO M 173+52	Rt	220	0.08	18
PP-5	M 173+65 TO M 174+31	Rt	220	0.08	23
PP-5	M 174+27 TO M 174+97	Rt	560	0.08	45
PP-5	M 174+85 TO M 175+11	Lt	130	0.08	11
PP-5	M 175+27 TO M 175+49	Rt	90	0.08	8
PP-5	M 175+39 TO M 176+49	Lt	660	0.08	53
PP-5	M 175+60 TO M 175+80	Rt	110	0.08	9
PP-5	M 175+90 TO M 176+96	Rt	540	0.08	44

SHEET	STATION LIMITS	LOC	(N) m^2 AREA	(N) m DEPTH	m^3 VOLUME
PP-6	M 177+17 TO M 178+32	Lt	955	0.08	77
PP-6	M 177+36 TO M 177+57	Rt	90	0.08	8
PP-6	M 178+03 TO M 179+04	Rt	500	0.08	40
PP-6	M 178+62 TO M 179+67	Lt	390	0.08	32
PP-6	M 179+24 TO M 179+58	Rt	140	0.08	12
PP-6	M 179+75 TO M 179+94	Rt	90	0.08	8
PP-6	M 179+98 TO M 180+37	Rt	110	0.08	9
PP-6	M 180+06 TO M 180+78	Lt	290	0.08	24
BLANKET APPLICATION TOTAL			27 928		2 320

BASIN APPLICATION

PLANT GROUP	EACH		(N) m^3 VOL EACH	m^3 VOLUME
A	7 850		0.02	157
B	131		0.03	4
BASIN APPLICATION TOTAL				161
TOTAL				2 652

IRRIGATION CROSSOVERS

LOCATION		SIDE		CONDUIT TYPE (5) SIZE (mm) DN		(N) WATER LINE CROSSOVER	(N) SPRINKLER CONTROL CROSSOVER
LINE	STATION	Rt	Lt	LENGTH (m) 300	300		
M	165+03	—	—	8		100	50
Q1	169+16		—	8	8	25,25,40,75,75,100	50
Q2	169+04	—		8	8	25,40,75,75	50
Q3	169+72		—	8	8	40,50,50,50,100	50
Q4	169+98	—		8		25,40,40,40	50
TOTAL				40	24		

(N) - NOT A SEPARATE PAY ITEM FOR INFORMATION ONLY
DN - DIAMETER NOMINAL
X - DENOTES REQUIREMENT

CONDUIT TYPE
(APPLICABLE WHEN CIRCLED BELOW AND SHOWN UNDER THE 'CONDUIT TYPE' COLUMN HEADING)

1 BITUMINOUS COATED CORRUGATED STEEL PIPE (1.626 mm THICK)
2 CORRUGATED STEEL PIPE (1.626 mm THICK)
3 CORRUGATED HIGH DENSITY POLYETHYLENE PIPE
4 ALTERNATIVE CONDUIT
(5) WELDED STEEL PIPE

TEXTURED PCC PANEL

SHEET	LOCATION STATION		EA PANEL QTY	(N) FOOTING QTY	(N) m^2 AREA	(N) m DEPTH	(N) m LENGTH	(N) m^2 DEPTH	(N) m^3 VOLUME	(N) TOTAL m^3 VOLUME
PP-3	M 167+51 TO M 169+23	Lt	5	-	55	0.25	-	-	14	70
PP-3	M 167+51 TO M 169+23	Lt	-	5	-	-	24.5	0.315	8	40
PP-3	M 167+19 TO M 169+23	Rt	6	-	55	0.25	-	-	14	84
PP-3	M 167+19 TO M 169+23	Rt	-	6	-	-	24.5	0.315	8	48
PP-4	M 169+63 TO M 171+34	Lt	5	-	55	0.25	-	-	14	70
PP-4	M 169+63 TO M 171+34	Lt	-	5	-	-	24.5	0.315	8	40
PP-4	M 169+63 TO M 170+98	Rt	4	-	55	0.25	-	-	14	56
PP-4	M 169+63 TO M 170+98	Rt	-	4	-	-	24.5	0.315	8	32
	TOTAL		20							440

SUMMARY OF QUANTITIES

Q-1

REVISED BY	DATE REVISED
JLP	7/1/10

CALCULATED-DESIGNED BY: JEFFREY L. PIETRZAK
CHECKED BY: T. CHRIS JOHNSON
SENIOR LANDSCAPE ARCHITECT: K. MURRAY

STATE OF CALIFORNIA - DEPARTMENT OF TRANSPORTATION
Caltrans
LANDSCAPE

LAST REVISION 00-00-00
DATE PLOTTED => 02-AUG-2010
TIME PLOTTED => 15:29

Dist	COUNTY	ROUTE	KILOMETER POST TOTAL PROJECT	SHEET No.	TOTAL SHEETS
03	Sut	99	T49.2/R51.8	9	88

Caltrans Metric

LICENSED LANDSCAPE ARCHITECT 7-12-10

7-26-10
PLANS APPROVAL DATE

LICENSED LANDSCAPE ARCHITECT JEFFREY L. PIETRZAK No. 4457 Signature 12-31-11 Renewal Date 5-1-10 Date STATE OF CALIFORNIA

THE STATE OF CALIFORNIA OR ITS OFFICERS OR AGENTS SHALL NOT BE RESPONSIBLE FOR THE ACCURACY OR COMPLETENESS OF ELECTRONIC COPIES OF THIS PLAN SHEET.

MINOR CONCRETE (TEXTURED PAVING) TYPE 1

SHEET	LOCATION STATION		m^2 AREA	(N) m DEPTH	(N) m^3 VOLUME
PP-3	M 167+18 TO M 167+81	Lt	295	0.25	74
PP-3	M 166+87 TO M 167+79	Rt	475	0.25	119
PP-4	M 171+02 TO M 171+71	Lt	330	0.25	83
PP-4	M 170+68 TO M 171+32	Rt	335	0.25	84
	TOTAL		1 435		360

MINOR CONCRETE (TEXTURED PAVING) TYPE 2

SHEET	LOCATION STATION		m^2 AREA	(N) m DEPTH	(N) m LENGTH	(N) m^2 DEPTH	(N) m^3 VOLUME
PP-3	M 167+73 TO M 169+36	Lt	200	0.25	-	-	50
PP-3	M 167+73 TO M 169+36	Lt	-	-	60	0.315	19
PP-3	M 167+73 TO M 169+36	Rt	205	0.25	-	-	52
PP-3	M 167+73 TO M 169+36	Rt	-	-	60	0.315	19
PP-4	M 169+51 TO M 171+13	Lt	205	0.25	-	-	52
PP-4	M 169+51 TO M 171+13	Lt	-	-	60	0.315	19
PP-4	M 169+51 TO M 170+66	Rt	170	0.25	-	-	43
PP-4	M 169+51 TO M 171+13	Rt	-	-	48	0.315	16
	TOTAL		780				270

ROADSIDE PAVING (MISCELLANEOUS AREAS)

SHEET	LOCATION STATION		m^2 AREA
PP-2	M 162+99 TO M 163+27	Rt	50
PP-2	M 163+10 TO M 163+23	Lt	10
PP-3	M 169+28 TO M 169+31	-	20
PP-4	M 169+31 TO M 169+57	-	30
PP-4	Q3 169+80 TO Q3 170+07	Lt	105
	TOTAL		215

RELOCATED SELECTED MATERIAL

SHEET	STATION LIMITS	LOC	EXCAVATED FROM	(N) ITEM QTY	(N) m^2 AREA	(N) m DEPTH	(N) m LENGTH	(N) m^2 DEPTH	(N) m^3 VOLUME	(N) TOTAL m^3 VOLUME
PP-4	Q3 169+80 TO Q3 170+07	Lt	ROADSIDE PAVING (MISCELLANEOUS AREAS)	1	105	0.225	-	-	24	24
PP-2	M 162+99 TO M 163+27	Lt	ROADSIDE PAVING (MISCELLANEOUS AREAS)	1	50	0.175	-	-	9	9
PP-2	M 163+10 TO M 163+23	Lt	ROADSIDE PAVING (MISCELLANEOUS AREAS)	1	10	0.175	-	-	2	2
PP-3	M 169+27 TO M 169+42	-	ROADSIDE PAVING (MISCELLANEOUS AREAS)	1	20	0.175	-	-	4	4
PP-4	M 169+42 TO M 169+62	-	ROADSIDE PAVING (MISCELLANEOUS AREAS)	1	30	0.175	-	-	6	6
PP-3	M 167+51 TO M 169+23	Lt	TEXTURED PCC PANEL	5	55	0.15	-	-	9	45
PP-3	M 167+51 TO M 169+23	Lt	TEXTURED PCC PANEL (FOOTING)	5	-	-	24.5	0.315	8	40
PP-3	M 167+19 TO M 169+23	Rt	TEXTURED PCC PANEL	6	55	0.15	-	-	9	54
PP-3	M 167+19 TO M 169+23	Rt	TEXTURED PCC PANEL (FOOTING)	6	-	-	24.5	0.315	8	48
PP-4	M 169+63 TO M 171+34	Lt	TEXTURED PCC PANEL	5	55	0.15	-	-	9	45
PP-4	M 169+63 TO M 171+34	Lt	TEXTURED PCC PANEL (FOOTING)	5	-	-	24.5	0.315	8	40
PP-4	M 169+63 TO M 170+98	Rt	TEXTURED PCC PANEL	4	55	0.15	-	-	9	36
PP-4	M 169+63 TO M 170+98	Rt	TEXTURED PCC PANEL (FOOTING)	4	-	-	24.5	0.315	8	32
PP-3	M 167+18 TO M 167+81	Lt	MINOR CONCRETE (TEXTURED PAVING) TYPE 1	1	295	0.25	-	-	74	74
PP-3	M 166+87 TO M 167+79	Rt	MINOR CONCRETE (TEXTURED PAVING) TYPE 1	1	475	0.25	-	-	119	119
PP-4	M 171+02 TO M 171+71	Lt	MINOR CONCRETE (TEXTURED PAVING) TYPE 1	1	330	0.25	-	-	83	83
PP-4	M 170+68 TO M 171+32	Rt	MINOR CONCRETE (TEXTURED PAVING) TYPE 1	1	335	0.25	-	-	84	84
PP-3	M 167+73 TO M 169+36	Lt	MINOR CONCRETE (TEXTURED PAVING) TYPE 2	1	200	0.25	-	-	50	50
PP-3	M 167+73 TO M 169+36	Lt	MINOR CONCRETE (TEXTURED PAVING) TYPE 2 (FOOTING)	1	-	-	60	0.315	19	19
PP-3	M 167+73 TO M 169+36	Rt	MINOR CONCRETE (TEXTURED PAVING) TYPE 2	1	205	0.25	-	-	52	52
PP-3	M 167+73 TO M 169+36	Rt	MINOR CONCRETE (TEXTURED PAVING) TYPE 2 (FOOTING)	1	-	-	60	0.315	19	19
PP-4	M 169+51 TO M 171+13	Lt	MINOR CONCRETE (TEXTURED PAVING) TYPE 2	1	205	0.25	-	-	52	52
PP-4	M 169+51 TO M 171+13	Lt	MINOR CONCRETE (TEXTURED PAVING) TYPE 2 (FOOTING)	1	-	-	60	0.315	19	19
PP-4	M 169+51 TO M 170+66	Rt	MINOR CONCRETE (TEXTURED PAVING) TYPE 2	1	170	0.25	-	-	43	43
PP-4	M 169+51 TO M 171+13	Rt	MINOR CONCRETE (TEXTURED PAVING) TYPE 2 (FOOTING)	1	-	-	48	0.315	16	16
									TOTAL	1 015

(N) NOT A SEPARATE PAY ITEM. FOR INFORMATION ONLY.

SUMMARY OF QUANTITIES

Q-2

STATE OF CALIFORNIA - DEPARTMENT OF TRANSPORTATION
Caltrans
LANDSCAPE
SENIOR LANDSCAPE ARCHITECT K. MURRAY
CALCULATED-DESIGNED BY JEFFREY L. PIETRZAK
CHECKED BY T. CHRIS JOHNSON
REVISED BY JLP
DATE REVISED 7/1/10

LAST REVISION 00-00-00 DATE PLOTTED => 02-AUG-2010 TIME PLOTTED => 15:29

Dist	COUNTY	ROUTE	KILOMETER POST TOTAL PROJECT	SHEET No.	TOTAL SHEETS
03	Sut	99	T49.2/R51.8	10	88

Jeffrey L. Pietrzak 7-12-10
LICENSED LANDSCAPE ARCHITECT

7-26-10
PLANS APPROVAL DATE

LICENSED LANDSCAPE ARCHITECT JEFFREY L. PIETRZAK No. 4457 Signature 12-31-11 Renewal Date 5-1-10 Date STATE OF CALIFORNIA

THE STATE OF CALIFORNIA OR ITS OFFICERS OR AGENTS SHALL NOT BE RESPONSIBLE FOR THE ACCURACY OR COMPLETENESS OF ELECTRONIC COPIES OF THIS PLAN SHEET.

Caltrans Metric

ABBREVIATIONS

AMEND — AMENDMENT
B & B — BALLED AND BURLAPPED
DIA — DIAMETER
EA — EACH
g — GRAM
Kg — KILOGRAM
m — METER
m^2 — SQUARE METER
m^3 — CUBIC METER
MAX — MAXIMUM
MIN — MINIMUM
mm — MILLIMETER
NCN — NO COMMON NAME
No — NUMBER
PKT — PACKET
PLT ESTB — PLANT ESTABLISHMENT
PVMT — PAVEMENT
R/W — RIGHT OF WAY
SF — STATE FURNISHED
TRVD — TRAVELED

APPLICABLE WHEN CIRCLED:

1 - QUANTITIES SHOWN ARE "PER PLANT" UNLESS SHOWN AS m^2 APPLICATION RATES.
2 - SUFFICIENT TO RECEIVE ROOT BALL.
3 - DOES NOT APPLY TO MULCH AREAS.
4 - AS SHOWN ON PLANS.
5 - UNLESS OTHERWISE SHOWN ON PLANS.
6 - REQUIRED
7 - SEE SPECIAL PROVISIONS

NOTE:

UNDERLINED PORTIONS OF BOTANICAL NAME INDICATE ABBREVIATIONS USED ON PLANTING PLANS.

PLANT LIST AND PLANTING SPECIFICATIONS

PLANT GROUP	PLANT No	SYMBOL	BOTANICAL NAME	COMMON NAME	SIZE	QUANTITY EACH	HOLE SIZE (mm) DIA	HOLE SIZE (mm) DEPTH	BASIN TYPE	SOIL SULFUR	SOIL AMEND 1	COMMERCIAL FERTILIZER 1 PLANTING	COMMERCIAL FERTILIZER 1 PLT ESTB TYPE 1	COMMERCIAL FERTILIZER 1 PLT ESTB TYPE 2	BASIN MULCH 1 3	STAKING	PLANTING LIMITS MINIMUM DISTANCE (m) FROM TRVD	PVMT	FENCE	WALL	PAVED DITCH	EARTH DITCH	ON CENTER (m)	REMARKS
A	1		CEANOTHUS GRISEUS HORIZONTALIS 'YANKEE POINT'	NCN	NO. 1	2 142	228	254	II	—	0.02 m^3	1 PKT	55 g	55 g	0.04 m^3	—	—	4.5	3	2	3	3.5	2	SHRUB
	2		CISTUS PURPUREUS	ORCHID ROCKROSE		527				—						—	—	2.5	2.5	2.5	2.5	2.5	2.5	SHRUB
	3		COTINUS COGGYGRIA 'PURPUREUS'	NCN		22				—						—	—	4.5	4.5	4.5	4.5	5	3	SHRUB
	4		GELSEMIUM SEMPERVIRENS	CAROLINA JESSAMINE		92				—						6	—	—	—	—	3	3.5	3	VINE
	5		GREVILLEA 'NOELLII'	NCN		421				—						—	—	2.5	2.5	2.5	2	2.5	2	SHRUB
	6		HEMEROCALLIS HYBRIDS	DAYLILY		1 808				—						—	—	1	1	1	1	1	0.5	SHRUB
	7		HETEROMELES ARBUTIFOLIA	TOYON		77				—						—	—	4.5	4.5	3	3	3.5	4.5	SHRUB
	8		JUNIPERUS HORIZONTALIS 'WILTONII'	WILTON CARPET JUNIPER		1165				—						—	—	2	2	2	2	2.5	2	SHRUB
	9		MAHONIA 'GOLDEN ABUNDANCE'	NCN		34				—						—	—	2	2	2	2	2.5	2	SHRUB
	10		MISCANTHUS SINENSIS 'GRACILLIMUS'	MISCANTHUS		184				—						—	—	2	2	2	2	2.5	2	SHRUB
	11		PHORMIUM TENAX 'RUBRUM'	RED FLAX		38				—						—	—	1	1	1	1	1	1	SHRUB
	12		PITTOSPORUM TOBIRA 'WHEELERS DWARF'	NCN	NO. 1	80	228	254	II	—	0.02 m^3	1 PKT	55 g	55 g	0.04 m^3	—	—	1	1	1	2	2	2.5	SHRUB

LEGEND:

MULCH
REMOVE GROUND COVER
REMOVE VEGETATION
REMOVE TREE
EXISTING PLANTS TO REMAIN
TFESA — TEMP FENCE (TYPE ESA)
ROADSIDE PAVING (MISCELLANEOUS AREAS)
WEED CONTROL MAT (RUBBER)
EROSION CONTROL (TYPE D) (CULTIVATE)
RELOCATED SELECTED MATERIAL
MINOR CONCRETE (TEXTURED PAVING TYPE 1)
MINOR CONCRETE (TEXTURED PAVING TYPE 2)
TEXTURED PCC PANEL

PLANT LIST
PL-1

JLP 7/1/10 REVISED BY DATE REVISED
JEFFREY L. PIETRZAK T. CHRIS JOHNSON CALCULATED-DESIGNED BY CHECKED BY
K. MURRAY SENIOR LANDSCAPE ARCHITECT
STATE OF CALIFORNIA - DEPARTMENT OF TRANSPORTATION
LANDSCAPE
Caltrans

LAST REVISION 00-00-00 DATE PLOTTED => 02-AUG-2010 TIME PLOTTED => 15:29

Dist	COUNTY	ROUTE	KILOMETER POST TOTAL PROJECT	SHEET No.	TOTAL SHEETS
03	Sut	99	T49.2/R51.8	11	88

Jeffrey L. Pietrzak 7-12-10
LICENSED LANDSCAPE ARCHITECT

7-26-10
PLANS APPROVAL DATE

LICENSED LANDSCAPE ARCHITECT JEFFREY L. PIETRZAK No. 4457 Signature 12-31-11 Renewal Date 5-1-10 Date STATE OF CALIFORNIA

THE STATE OF CALIFORNIA OR ITS OFFICERS OR AGENTS SHALL NOT BE RESPONSIBLE FOR THE ACCURACY OR COMPLETENESS OF ELECTRONIC COPIES OF THIS PLAN SHEET.

Caltrans Metric

ABBREVIATIONS

AMEND — AMENDMENT
B & B — BALLED AND BURLAPPED
DIA — DIAMETER
EA — EACH
g — GRAM
Kg — KILOGRAM
m — METER
m^2 — SQUARE METER
m^3 — CUBIC METER
MAX — MAXIMUM
MIN — MINIMUM
mm — MILLIMETER
NCN — NO COMMON NAME
No — NUMBER
PKT — PACKET
PLT ESTB — PLANT ESTABLISHMENT
PVMT — PAVEMENT
R/W — RIGHT OF WAY
SF — STATE FURNISHED
TRVD — TRAVELED

APPLICABLE WHEN CIRCLED:

1 - QUANTITIES SHOWN ARE "PER PLANT" UNLESS SHOWN AS m^2 APPLICATION RATES.
2 - SUFFICIENT TO RECEIVE ROOT BALL.
3 - DOES NOT APPLY TO MULCH AREAS.
4 - AS SHOWN ON PLANS.
5 - UNLESS OTHERWISE SHOWN ON PLANS.
6 - REQUIRED
7 - SEE SPECIAL PROVISIONS

NOTE:

UNDERLINED PORTIONS OF BOTANICAL NAME INDICATE ABBREVIATIONS USED ON PLANTING PLANS.

PLANT LIST AND PLANTING SPECIFICATIONS

PLANT GROUP	PLANT No	SYMBOL	BOTANICAL NAME	COMMON NAME	SIZE	QUANTITY EACH	HOLE SIZE (mm) DIA	HOLE SIZE (mm) DEPTH	BASIN TYPE	SOIL SULFUR	SOIL AMEND 1	COMMERCIAL FERTILIZER 1 PLANTING	COMMERCIAL FERTILIZER 1 PLT ESTB TYPE 1 / TYPE 2	BASIN MULCH 1 3	STAKING	PLANTING LIMITS MINIMUM DISTANCE (m) FROM TRVD	PVMT	FENCE	WALL	PAVED DITCH	EARTH DITCH	ON CENTER (m)	REMARKS
A	13		RHAPHIOLEPIS INDICA 'JACK EVANS'	NCN	NO. 1	509	228	254	II	—	0.02 m^3	1 PKT	55 g / 55 g	0.04 m^3	—	—	2.5	3	3	2.5	3	2	SHRUB
	14		ROSA 'MEIDLAND'	RED MEIDLAND		415				—					—	—	2.5	2.5	2.5	2.5	3	2	SHRUB
	15		SOLLYA HETEROPHYLLA	AUSTRALIAN BLUEBELL CREEPER		41				—					—	—	3	2	2	2	2.5	2	SHRUB
	16		TRACHELOSPERMUM ASIATICUM	ASIAN JASMINE		135				—					—	—	3	—	—	3	3.5	2	GROUND COVER
	17		XYLOSMA CONGESTUM	SHINY XYLOSMA	NO. 1	93	228	254	II	—	0.02 m^3	1 PKT	55 g / 55 g	0.04 m^3	—	—	4.5	4.5	3	3	3.5	3	SHRUB
B	18		GEIJERA PARVIFLORA	AUSTRALIAN WILLOW	NO. 5	33	457	406	II	—	0.03 m^3	2 PKT	110 g / 110 g	0.04 m^3	6	9	—	3	3	3	3.5	4	TREE
	19		GLEDITSIA TRIACANTHOS INERMIS 'HALKA'	NCN		31				—					6	9	4	4.5	4	4	4	4	TREE
	20		PLATANUS RACEMOSA	CALIFORNIA SYCAMORE		28				—					6	12.5	—	6	6	3	3.5	4	TREE
	21		QUERCUS LOBATA	VALLEY OAK		3				—					6	9	—	6	6	6	7	4	TREE
	22		SCHINUS MOLLE	CALIFORNIA PEPPER TREE	NO. 5	26	457	406	II	—	0.03 m^3	2 PKT	110 g / 110 g	0.04 m^3	6	12.5	—	9	7.5	6	7	4	TREE
F	23		GAZANIA RIGENS LEUCOLAENA 'SUNRISE YELLOW'	GAZANIA	IN FLATS	42 626	2		-	—	2.54 m^3/ 100 m^2	5 kg/ 100 m^2	5 kg/ 100 m^2	—	—	—	2	2	2	2	2.5	0.3	3070 m^2/ GROUND COVER (CULTIVATE)

PLANT LIST
PL-2

JLP	7/1/10	REVISED BY	DATE REVISED
JEFFREY L. PIETRZAK	T. CHRIS JOHNSON	CALCULATED-DESIGNED BY	CHECKED BY
SENIOR LANDSCAPE ARCHITECT	K. MURRAY		

STATE OF CALIFORNIA - DEPARTMENT OF TRANSPORTATION
LANDSCAPE
Caltrans

LAST REVISION 00-00-00 DATE PLOTTED => 02-AUG-2010 TIME PLOTTED => 15:29

Dist	COUNTY	ROUTE	KILOMETER POST TOTAL PROJECT	SHEET No.	TOTAL SHEETS
03	Sut	99	T49.2/R51.8	12	88

Jeffrey L. Pietrzak 7-12-10
LICENSED LANDSCAPE ARCHITECT

7-26-10
PLANS APPROVAL DATE

LICENSED LANDSCAPE ARCHITECT JEFFREY L. PIETRZAK No. 4457 Signature 12-31-11 Renewal Date 5-1-10 Date STATE OF CALIFORNIA

THE STATE OF CALIFORNIA OR ITS OFFICERS OR AGENTS SHALL NOT BE RESPONSIBLE FOR THE ACCURACY OR COMPLETENESS OF ELECTRONIC COPIES OF THIS PLAN SHEET.

Caltrans Metric

ROADSIDE CLEARING NOTES:

1. REMOVE TREE, REMOVE VEGETATION, REMOVE GROUND COVER, SHALL BE PAID AS ROADSIDE CLEARING.

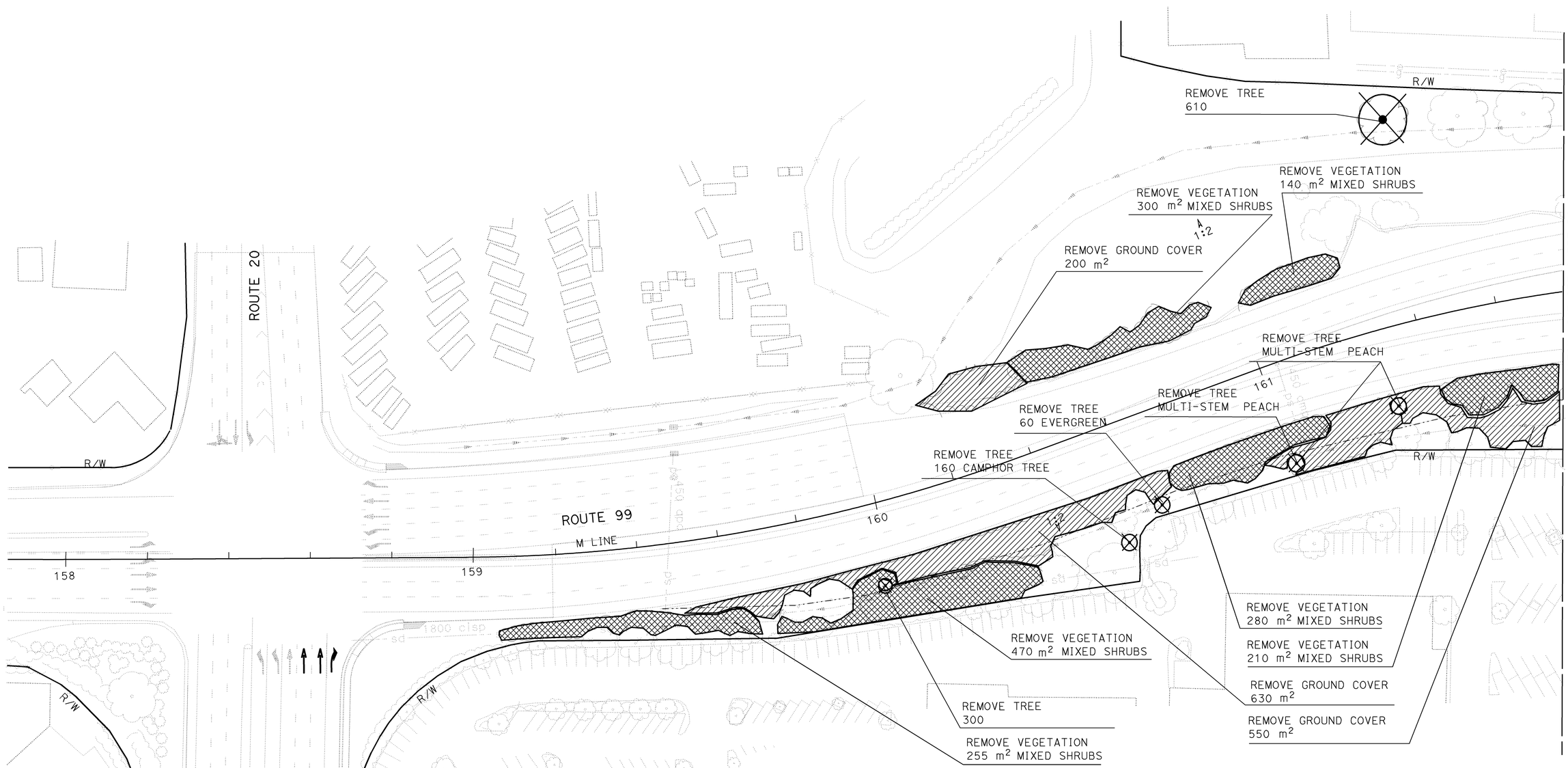

ALL DIMENSIONS ARE IN METERS UNLESS OTHERWISE SHOWN

ROADSIDE CLEARING PLAN

SCALE 1:500

RC-1

FOR COMPLETE R/W AND ACCURATE ACCESS DATA, SEE R/W RECORD MAPS AT DISTRICT OFFICE.

ALL TREE REMOVAL IS SHOWN IN MILLIMETERS (DIAMETER NOMINAL) DIAMETER BREAST HEIGHT UNLESS OTHERWISE NOTED. THIS PLAN ACCURATE FOR ROADSIDE CLEARING ONLY.

STATE OF CALIFORNIA - DEPARTMENT OF TRANSPORTATION
Caltrans
LANDSCAPE

SENIOR LANDSCAPE ARCHITECT: K. MURRAY
CALCULATED-DESIGNED BY: JEFFREY L. PIETRZAK
CHECKED BY: T. CHRIS JOHNSON
REVISED BY: JLP
DATE REVISED: 7/1/10

LAST REVISION 00-00-00
DATE PLOTTED => 02-AUG-2010
TIME PLOTTED => 15:29

Dist	COUNTY	ROUTE	KILOMETER POST TOTAL PROJECT	SHEET No.	TOTAL SHEETS
03	Sut	99	T49.2/R51.8	13	88

Jeffrey L. Pietrzak 7-12-10
LICENSED LANDSCAPE ARCHITECT

7-26-10
PLANS APPROVAL DATE

LICENSED LANDSCAPE ARCHITECT JEFFREY L. PIETRZAK No. 4457 Signature 12-31-11 Renewal Date 5-1-10 Date STATE OF CALIFORNIA

THE STATE OF CALIFORNIA OR ITS OFFICERS OR AGENTS SHALL NOT BE RESPONSIBLE FOR THE ACCURACY OR COMPLETENESS OF ELECTRONIC COPIES OF THIS PLAN SHEET.

Caltrans Metric

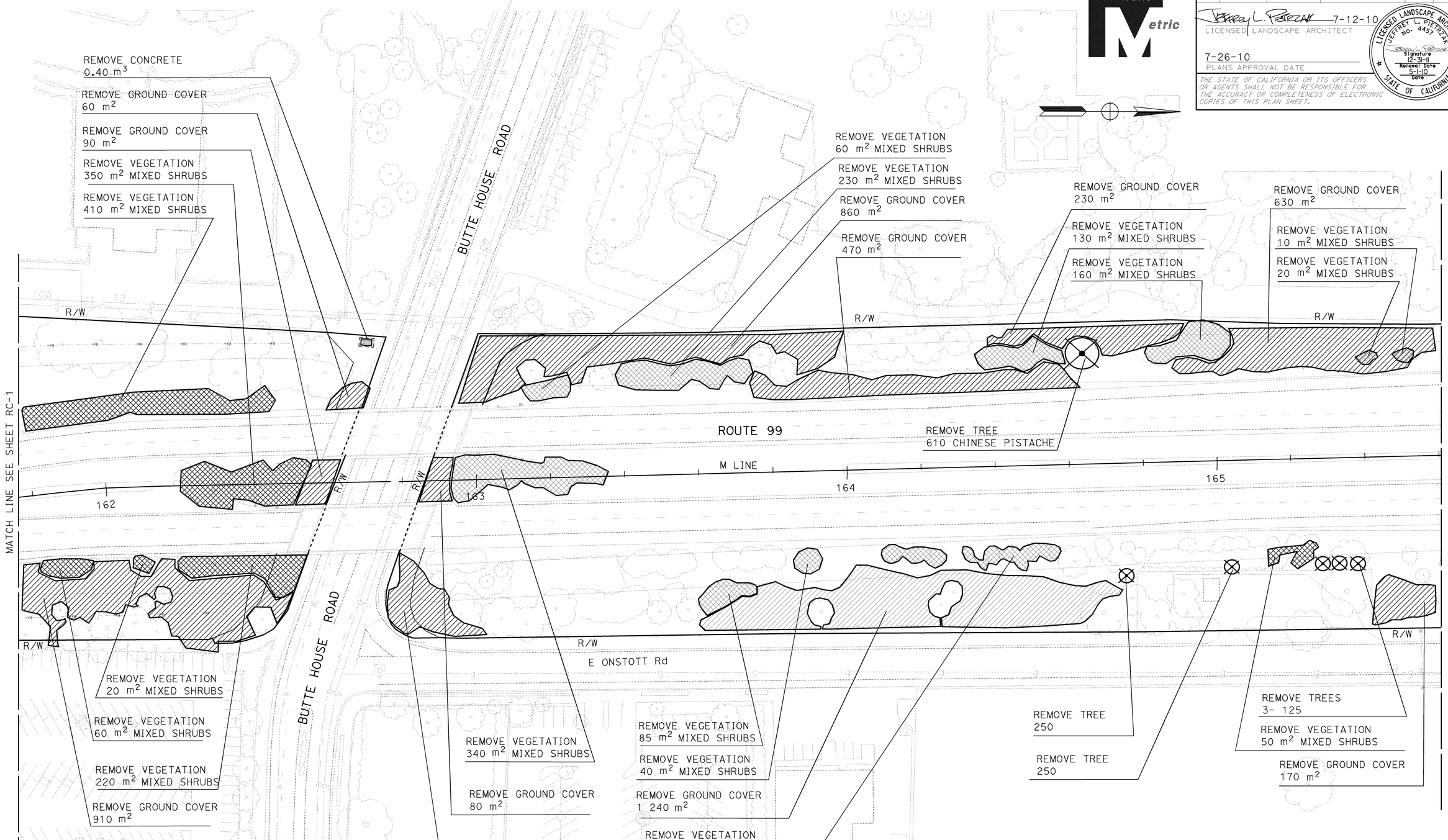

ALL DIMENSIONS ARE IN METERS UNLESS OTHERWISE SHOWN

ROADSIDE CLEARING PLAN

SCALE 1:500

FOR COMPLETE R/W AND ACCURATE ACCESS DATA, SEE R/W RECORD MAPS AT DISTRICT OFFICE.

ALL TREE REMOVAL IS SHOWN IN MILLIMETERS (DIAMETER NOMINAL) DIAMETER BREAST HEIGHT UNLESS OTHERWISE NOTED. THIS PLAN ACCURATE FOR ROADSIDE CLEARING ONLY.

RC-2

REVISED BY	JLP
DATE REVISED	7/1/10
CALCULATED-DESIGNED BY	JEFFREY L. PIETRZAK
CHECKED BY	T. CHRIS JOHNSON
SENIOR LANDSCAPE ARCHITECT	K. MURRAY

STATE OF CALIFORNIA - DEPARTMENT OF TRANSPORTATION
Caltrans
LANDSCAPE

LAST REVISION 00-00-00 | DATE PLOTTED => 02-AUG-2010 | TIME PLOTTED => 15:29

Dist	COUNTY	ROUTE	KILOMETER POST TOTAL PROJECT	SHEET No.	TOTAL SHEETS
03	Sut	99	T49.2/R51.8	14	88

Jeffrey L. Pietrzak 7-12-10
LICENSED LANDSCAPE ARCHITECT

7-26-10
PLANS APPROVAL DATE

LICENSED LANDSCAPE ARCHITECT JEFFREY L. PIETRZAK No. 4457 Signature 12-31-11 Renewal Date 5-1-10 Date STATE OF CALIFORNIA

THE STATE OF CALIFORNIA OR ITS OFFICERS OR AGENTS SHALL NOT BE RESPONSIBLE FOR THE ACCURACY OR COMPLETENESS OF ELECTRONIC COPIES OF THIS PLAN SHEET.

Caltrans Metric

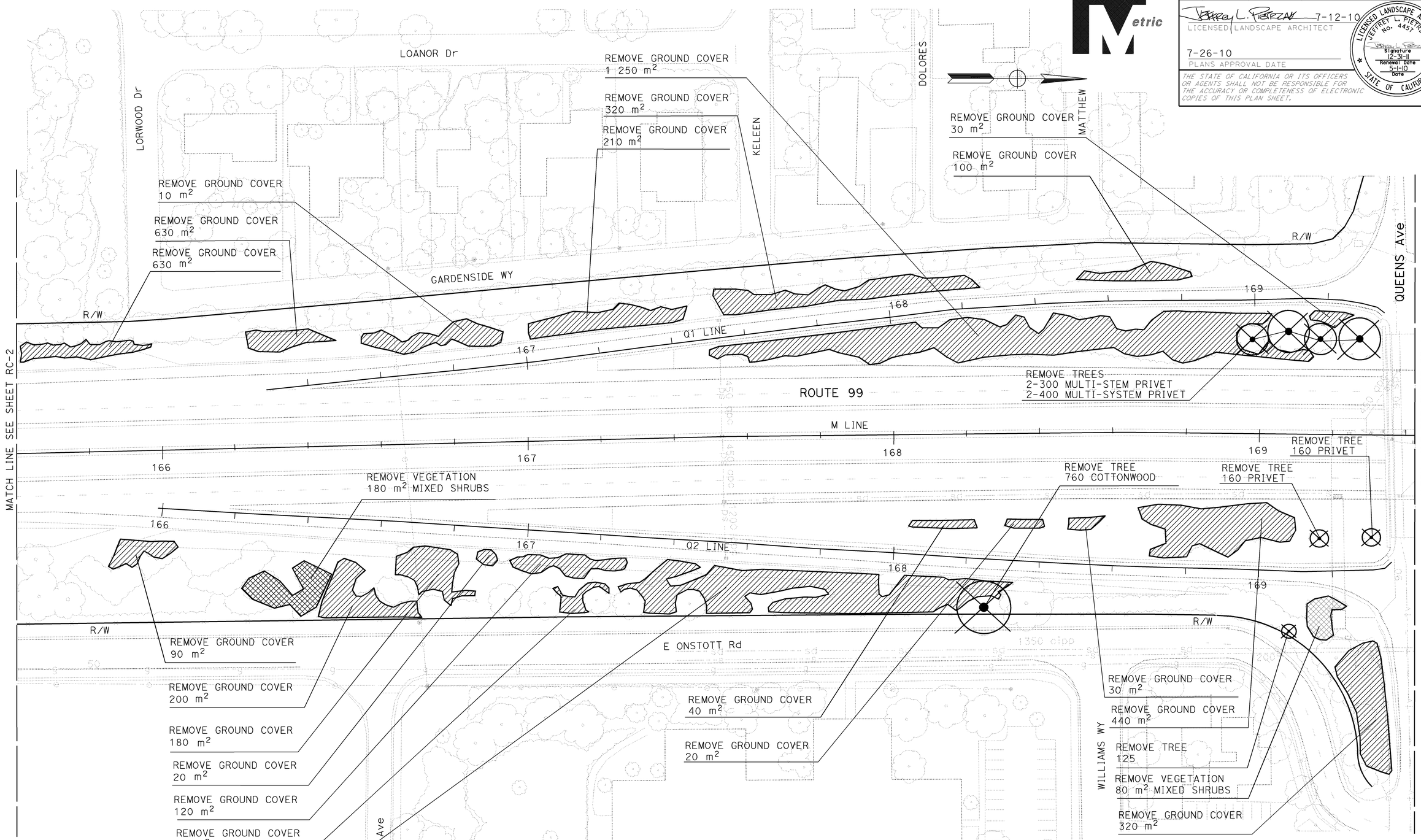

ALL DIMENSIONS ARE IN METERS UNLESS OTHERWISE SHOWN

ROADSIDE CLEARING PLAN

SCALE 1:500

RC-3

FOR COMPLETE R/W AND ACCURATE ACCESS DATA, SEE R/W RECORD MAPS AT DISTRICT OFFICE.

ALL TREE REMOVAL IS SHOWN IN MILLIMETERS (DIAMETER NOMINAL) DIAMETER BREAST HEIGHT UNLESS OTHERWISE NOTED. THIS PLAN ACCURATE FOR ROADSIDE CLEARING ONLY.

CALCULATED-DESIGNED BY	JEFFREY L. PIETRZAK	REVISED BY JLP
CHECKED BY	T. CHRIS JOHNSON	DATE REVISED 7/1/10
SENIOR LANDSCAPE ARCHITECT	K. MURRAY	

STATE OF CALIFORNIA - DEPARTMENT OF TRANSPORTATION
Caltrans LANDSCAPE

LAST REVISION 00-00-00 | DATE PLOTTED => 02-AUG-2010 | TIME PLOTTED => 15:29

Dist	COUNTY	ROUTE	KILOMETER POST TOTAL PROJECT	SHEET No.	TOTAL SHEETS
03	Sut	99	T49.2/R51.8	15	88

Jeffrey L. Pietrzak 7-12-10
LICENSED LANDSCAPE ARCHITECT

7-26-10
PLANS APPROVAL DATE

LICENSED LANDSCAPE ARCHITECT JEFFREY L. PIETRZAK No. 4457 Signature 12-31-11 Renewal Date 5-1-10 Date STATE OF CALIFORNIA

THE STATE OF CALIFORNIA OR ITS OFFICERS OR AGENTS SHALL NOT BE RESPONSIBLE FOR THE ACCURACY OR COMPLETENESS OF ELECTRONIC COPIES OF THIS PLAN SHEET.

Caltrans Metric

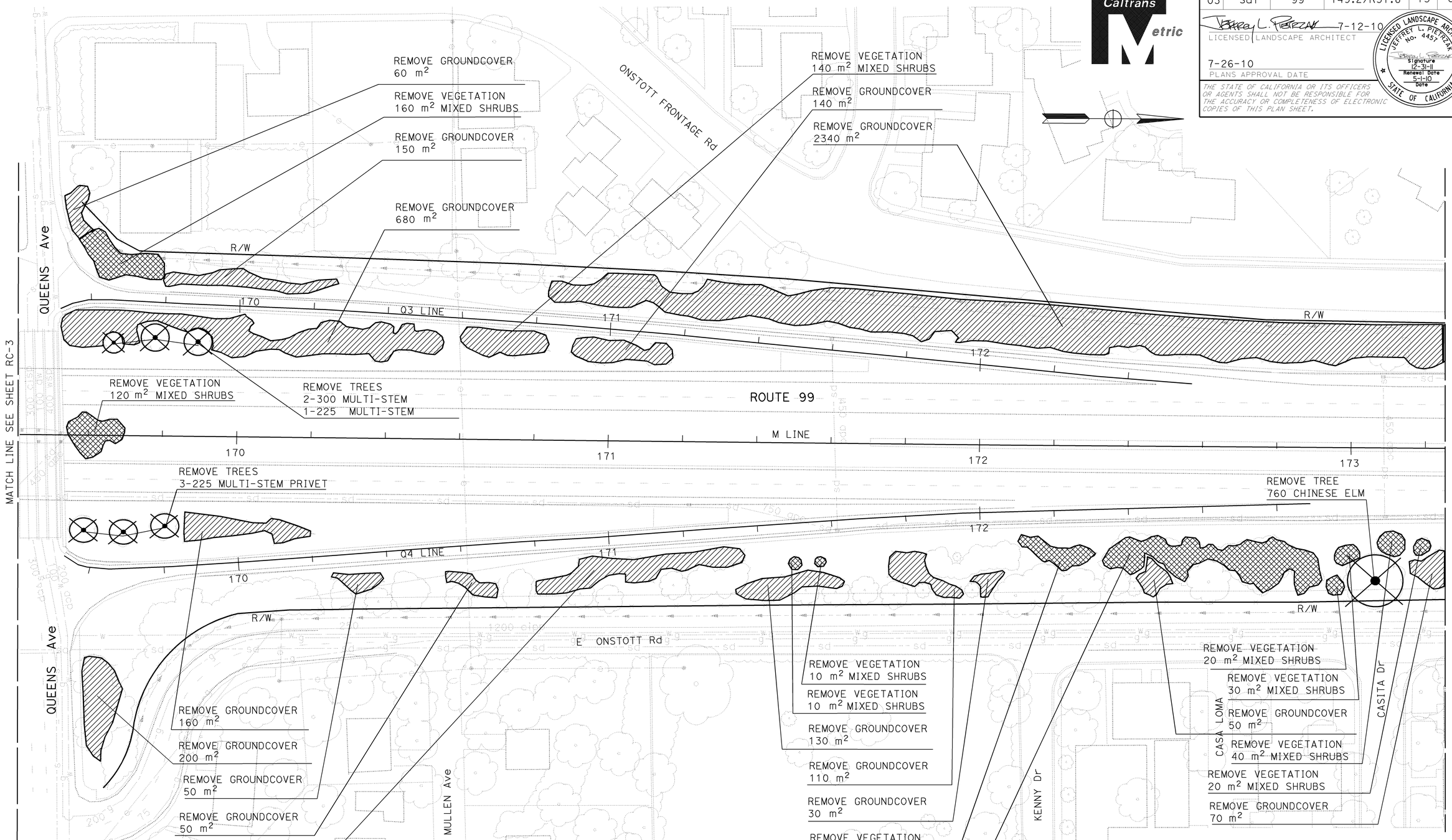

ALL DIMENSIONS ARE IN METERS UNLESS OTHERWISE SHOWN

ROADSIDE CLEARING PLAN

SCALE 1:500

FOR COMPLETE R/W AND ACCURATE ACCESS DATA, SEE R/W RECORD MAPS AT DISTRICT OFFICE.

ALL TREE REMOVAL IS SHOWN IN MILLIMETERS (DIAMETER NOMINAL) DIAMETER BREAST HEIGHT UNLESS OTHERWISE NOTED. THIS PLAN ACCURATE FOR ROADSIDE CLEARING ONLY.

RC-4

REVISED BY	JLP
DATE REVISED	7/1/10
CALCULATED-DESIGNED BY	JEFFREY L. PIETRZAK
CHECKED BY	T. CHRIS JOHNSON
SENIOR LANDSCAPE ARCHITECT	K. MURRAY

STATE OF CALIFORNIA - DEPARTMENT OF TRANSPORTATION
Caltrans
LANDSCAPE

LAST REVISION 00-00-00 | DATE PLOTTED => 02-AUG-2010 | TIME PLOTTED => 1529

Dist	COUNTY	ROUTE	KILOMETER POST TOTAL PROJECT	SHEET No.	TOTAL SHEETS
03	Sut	99	T49.2/R51.8	16	88

Jeffrey L. Pietrzak 7-12-10
LICENSED LANDSCAPE ARCHITECT

7-26-10
PLANS APPROVAL DATE

LICENSED LANDSCAPE ARCHITECT JEFFREY L. PIETRZAK No. 4457 Signature 12-31-11 Renewal Date 5-1-10 Date STATE OF CALIFORNIA

THE STATE OF CALIFORNIA OR ITS OFFICERS OR AGENTS SHALL NOT BE RESPONSIBLE FOR THE ACCURACY OR COMPLETENESS OF ELECTRONIC COPIES OF THIS PLAN SHEET.

Caltrans Metric

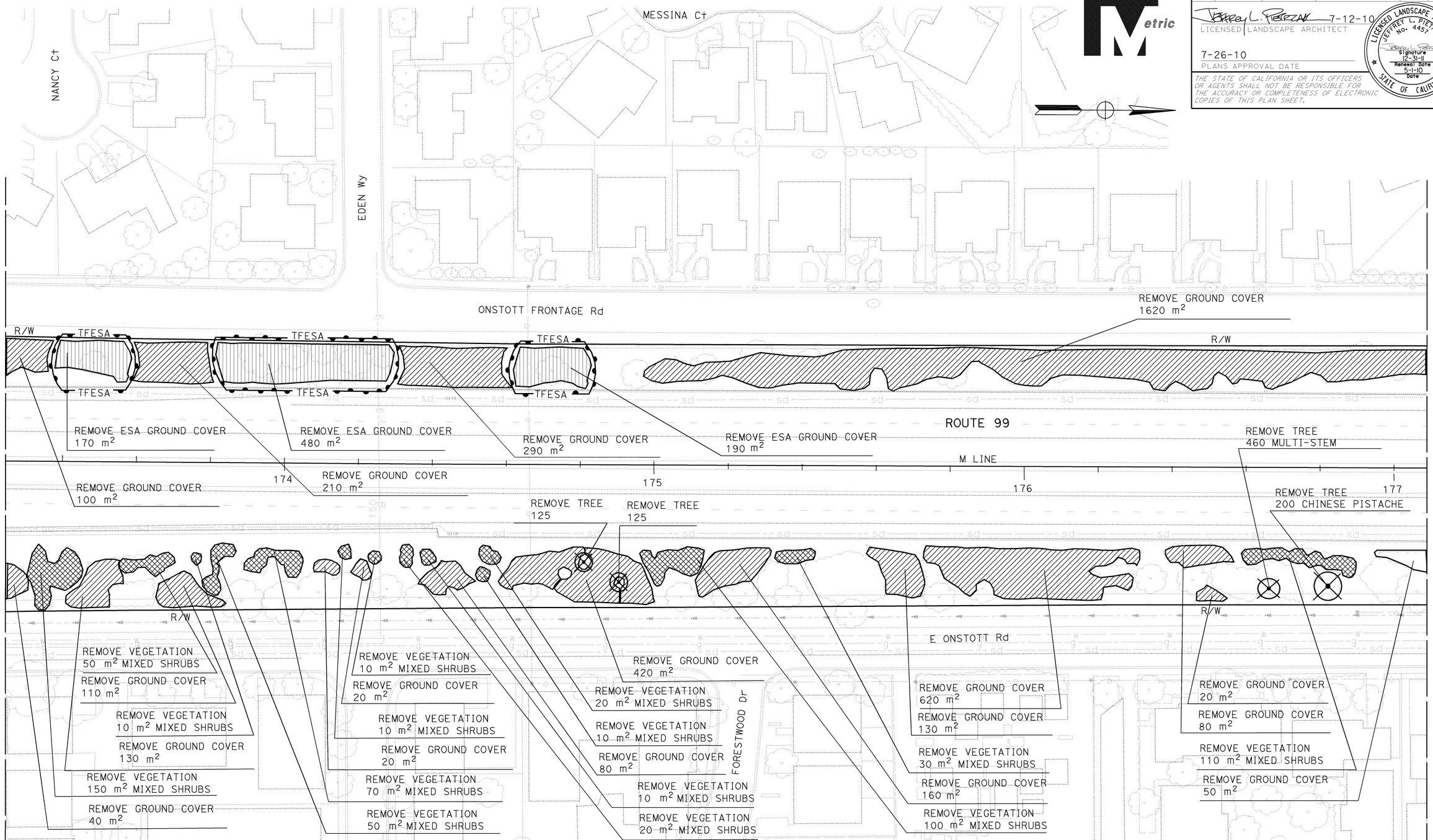

ALL DIMENSIONS ARE IN METERS UNLESS OTHERWISE SHOWN

ROADSIDE CLEARING PLAN

SCALE 1:500

RC-5

FOR COMPLETE R/W AND ACCURATE ACCESS DATA, SEE R/W RECORD MAPS AT DISTRICT OFFICE.

ALL TREE REMOVAL IS SHOWN IN MILLIMETERS (DIAMETER NOMINAL) DIAMETER BREAST HEIGHT UNLESS OTHERWISE NOTED. THIS PLAN ACCURATE FOR ROADSIDE CLEARING ONLY.

CALCULATED-DESIGNED BY	JEFFREY L. PIETRZAK
CHECKED BY	T. CHRIS JOHNSON
REVISED BY	JLP
DATE REVISED	7/1/10
SENIOR LANDSCAPE ARCHITECT	K. MURRAY

STATE OF CALIFORNIA - DEPARTMENT OF TRANSPORTATION
Caltrans
LANDSCAPE

LAST REVISION 00-00-00 | DATE PLOTTED => 02-AUG-2010 | TIME PLOTTED => 15:29

Dist	COUNTY	ROUTE	KILOMETER POST TOTAL PROJECT	SHEET No.	TOTAL SHEETS
03	Sut	99	T49.2/R51.8	17	88

Jeffrey L. Pietrzak 7-12-10
LICENSED LANDSCAPE ARCHITECT

7-26-10
PLANS APPROVAL DATE

LICENSED LANDSCAPE ARCHITECT JEFFREY L. PIETRZAK No. 4457 Signature 12-31-11 Renewal Date 5-1-10 Date STATE OF CALIFORNIA

THE STATE OF CALIFORNIA OR ITS OFFICERS OR AGENTS SHALL NOT BE RESPONSIBLE FOR THE ACCURACY OR COMPLETENESS OF ELECTRONIC COPIES OF THIS PLAN SHEET.

Caltrans Metric

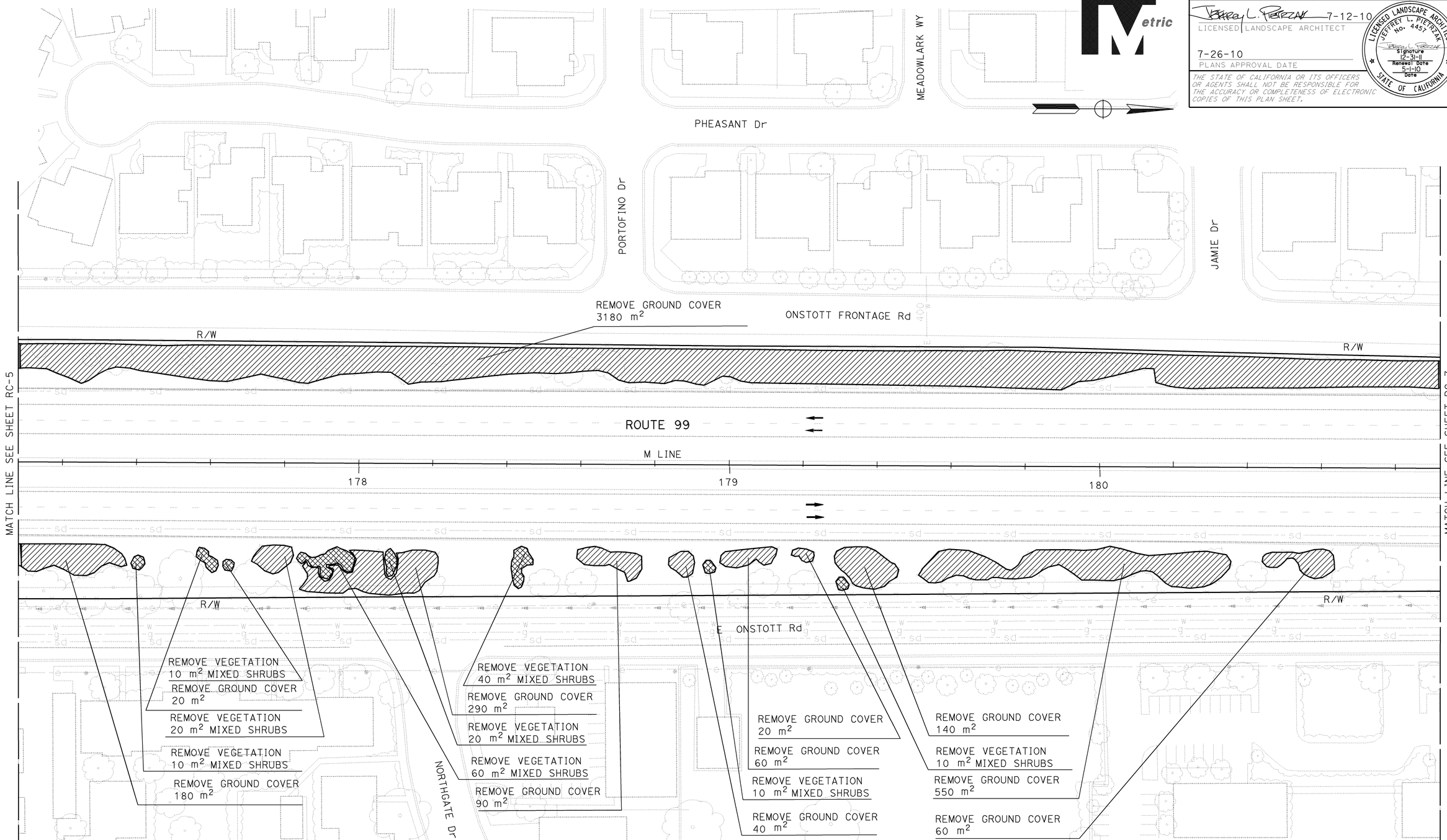

ALL DIMENSIONS ARE IN METERS UNLESS OTHERWISE SHOWN

ROADSIDE CLEARING PLAN

SCALE 1:500

FOR COMPLETE R/W AND ACCURATE ACCESS DATA, SEE R/W RECORD MAPS AT DISTRICT OFFICE.

ALL TREE REMOVAL IS SHOWN IN MILLIMETERS (DIAMETER NOMINAL) DIAMETER BREAST HEIGHT UNLESS OTHERWISE NOTED. THIS PLAN ACCURATE FOR ROADSIDE CLEARING ONLY.

RC-6

CALCULATED-DESIGNED BY	JEFFREY L. PIETRZAK
CHECKED BY	T. CHRIS JOHNSON
REVISED BY	JLP
DATE REVISED	7/1/10
SENIOR LANDSCAPE ARCHITECT	K. MURRAY

STATE OF CALIFORNIA - DEPARTMENT OF TRANSPORTATION
Caltrans
LANDSCAPE

LAST REVISION 00-00-00 | DATE PLOTTED => 02-AUG-2010 | TIME PLOTTED => 5:29

Dist	COUNTY	ROUTE	KILOMETER POST TOTAL PROJECT	SHEET No.	TOTAL SHEETS
03	Sut	99	T49.2/R51.8	18	88

Caltrans Metric

Jeffrey L. Pietrzak 7-12-10
LICENSED LANDSCAPE ARCHITECT

7-26-10
PLANS APPROVAL DATE

LICENSED LANDSCAPE ARCHITECT JEFFREY L. PIETRZAK No. 4457 Signature 12-31-11 Renewal Date 5-1-10 Date STATE OF CALIFORNIA

THE STATE OF CALIFORNIA OR ITS OFFICERS OR AGENTS SHALL NOT BE RESPONSIBLE FOR THE ACCURACY OR COMPLETENESS OF ELECTRONIC COPIES OF THIS PLAN SHEET.

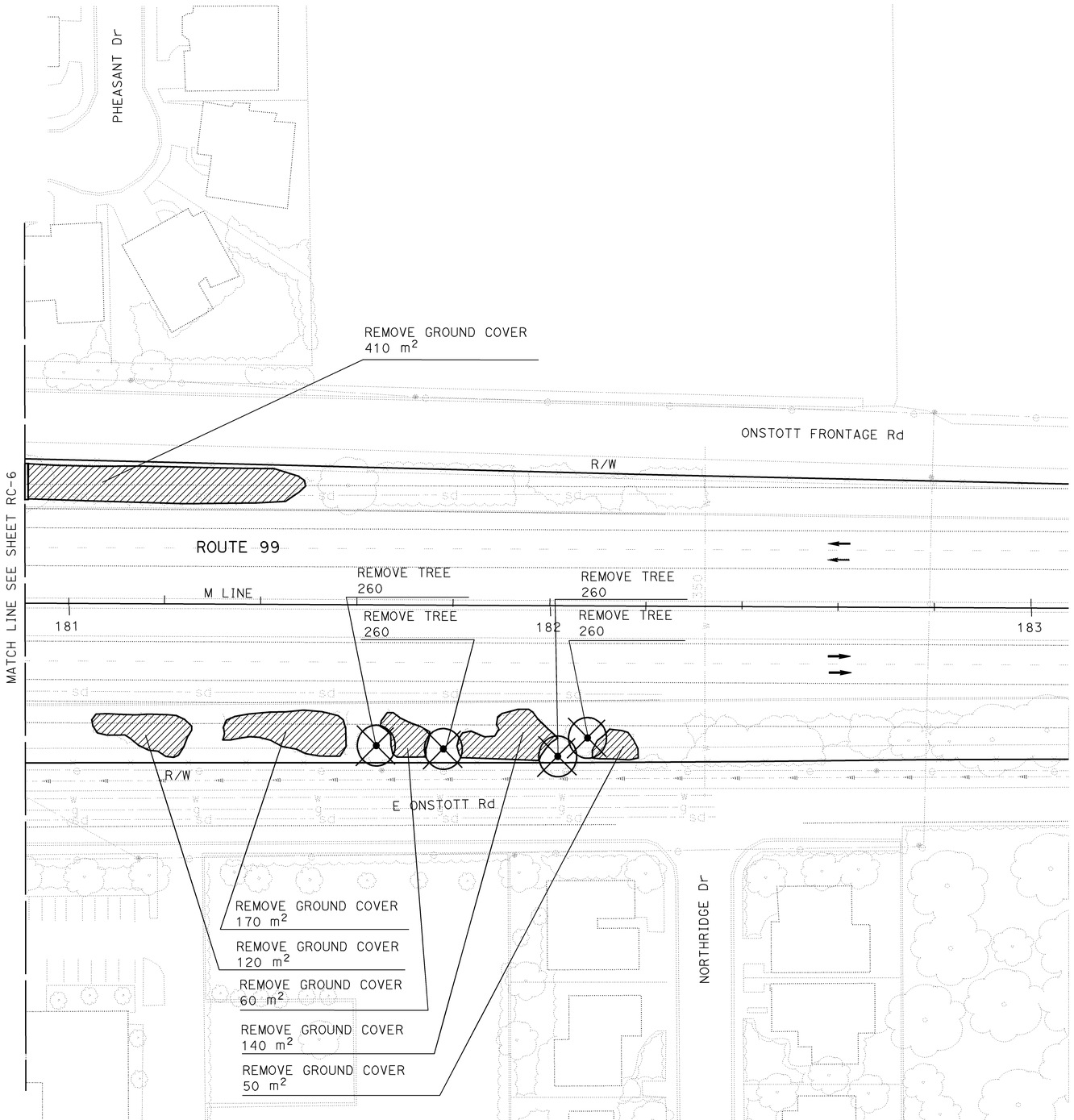

ALL DIMENSIONS ARE IN METERS UNLESS OTHERWISE SHOWN

ROADSIDE CLEARING PLAN

SCALE 1:500

RC-7

FOR COMPLETE R/W AND ACCURATE ACCESS DATA, SEE R/W RECORD MAPS AT DISTRICT OFFICE.

ALL TREE REMOVAL IS SHOWN IN MILLIMETERS (DIAMETER NOMINAL) DIAMETER BREAST HEIGHT UNLESS OTHERWISE NOTED. THIS PLAN ACCURATE FOR ROADSIDE CLEARING ONLY.

STATE OF CALIFORNIA - DEPARTMENT OF TRANSPORTATION
Caltrans
LANDSCAPE

SENIOR LANDSCAPE ARCHITECT: K. MURRAY
CALCULATED-DESIGNED BY: JEFFREY L. PIETRZAK
CHECKED BY: T. CHRIS JOHNSON
REVISED BY: JLP
DATE REVISED: 7/1/10

LAST REVISION 00-00-00
DATE PLOTTED => 02-AUG-2010
TIME PLOTTED => 15:29

Dist	COUNTY	ROUTE	KILOMETER POST TOTAL PROJECT	SHEET No.	TOTAL SHEETS
03	Sut	99	T49.2/R51.8	19	88

Jeffrey L. Pietrzak 7-12-10
LICENSED LANDSCAPE ARCHITECT

7-26-10
PLANS APPROVAL DATE

LICENSED LANDSCAPE ARCHITECT JEFFREY L. PIETRZAK No. 4457 Signature 12-31-11 Renewal Date 5-1-10 Date STATE OF CALIFORNIA

THE STATE OF CALIFORNIA OR ITS OFFICERS OR AGENTS SHALL NOT BE RESPONSIBLE FOR THE ACCURACY OR COMPLETENESS OF ELECTRONIC COPIES OF THIS PLAN SHEET.

Caltrans Metric

Location of utility facilities shown on these plans was obtained either from owner's records and/ or from State's survey.

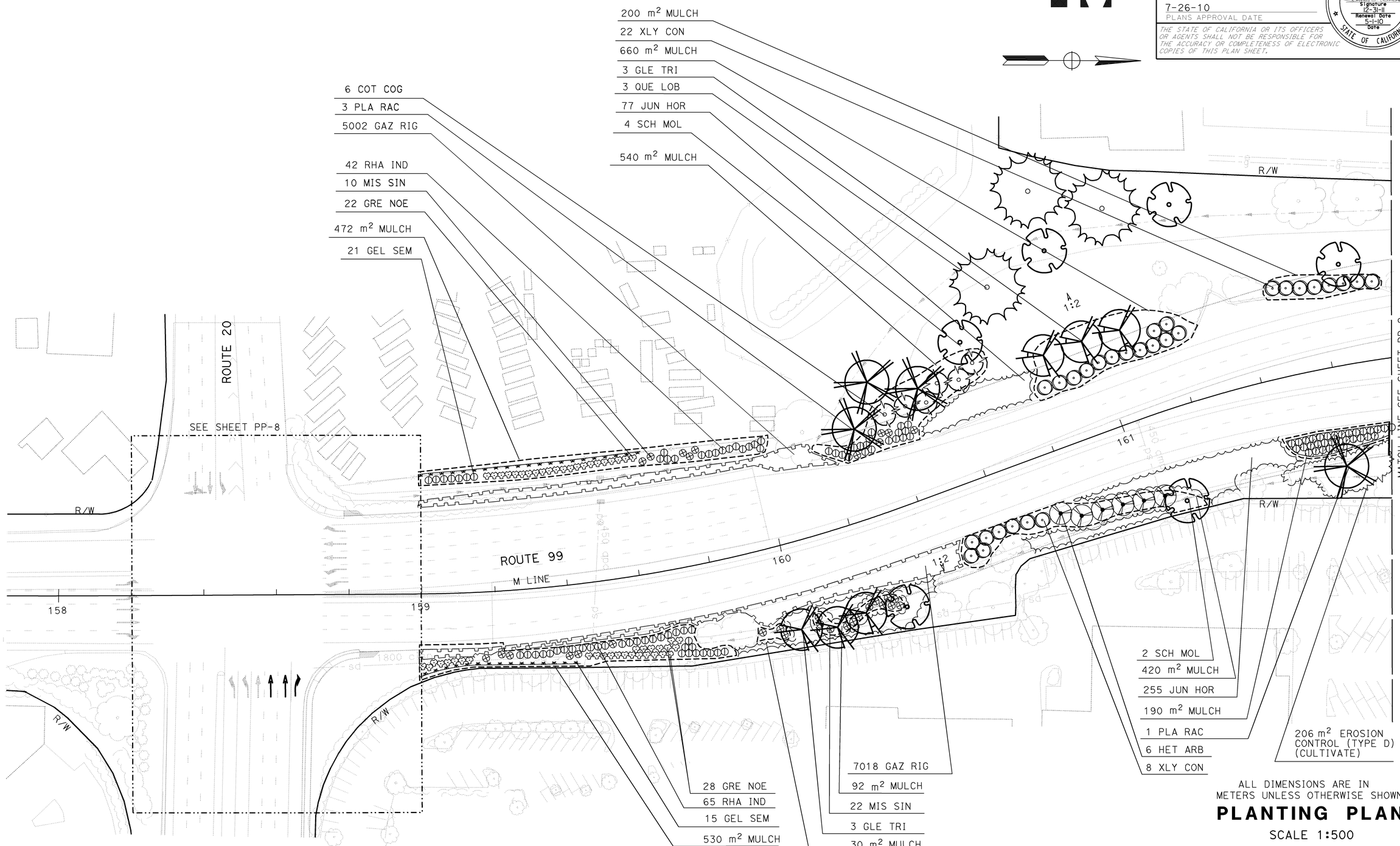

ALL DIMENSIONS ARE IN METERS UNLESS OTHERWISE SHOWN

PLANTING PLAN

SCALE 1:500

FOR COMPLETE R/W AND ACCURATE ACCESS DATA, SEE R/W RECORD MAPS AT DISTRICT OFFICE.

THIS PLAN ACCURATE FOR PLANTING WORK ONLY.

PP-1

STATE OF CALIFORNIA - DEPARTMENT OF TRANSPORTATION
Caltrans
LANDSCAPE

SENIOR LANDSCAPE ARCHITECT: K. MURRAY
CALCULATED-DESIGNED BY: JEFFREY L. PIETRZAK
CHECKED BY: T. CHRIS JOHNSON
REVISED BY: JLP
DATE REVISED: 7/1/10

LAST REVISION 00-00-00
DATE PLOTTED => 02-AUG-2010
TIME PLOTTED => 15:29

Dist	COUNTY	ROUTE	KILOMETER POST TOTAL PROJECT	SHEET No.	TOTAL SHEETS
03	Sut	99	T49.2/R51.8	20	88

LICENSED LANDSCAPE ARCHITECT 7-12-10

7-26-10
PLANS APPROVAL DATE

LICENSED LANDSCAPE ARCHITECT JEFFREY L. PIETRZAK No. 4457 Signature 12-31-11 Renewal Date 5-1-10 Date STATE OF CALIFORNIA

THE STATE OF CALIFORNIA OR ITS OFFICERS OR AGENTS SHALL NOT BE RESPONSIBLE FOR THE ACCURACY OR COMPLETENESS OF ELECTRONIC COPIES OF THIS PLAN SHEET.

Caltrans Metric

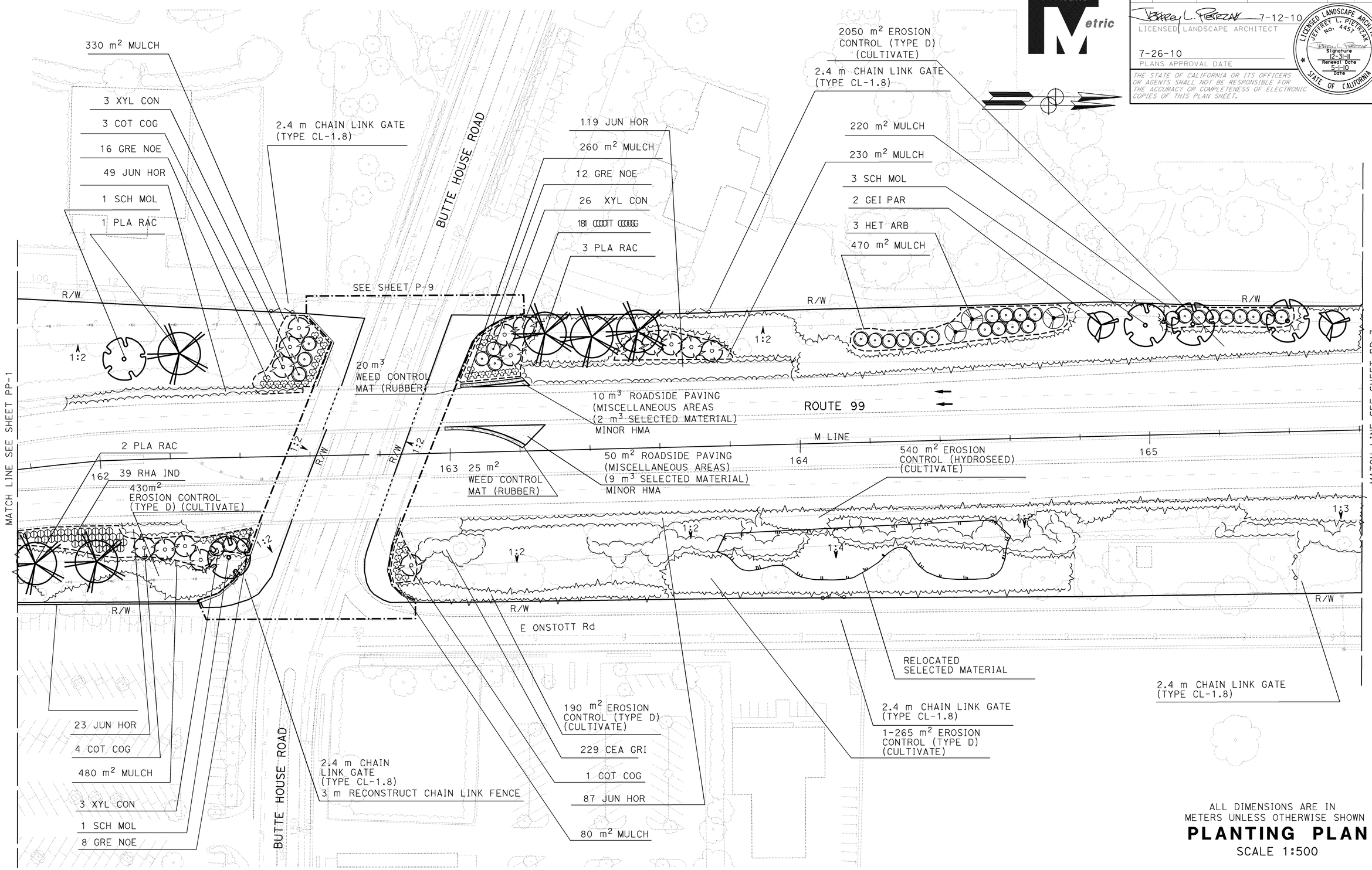

ALL DIMENSIONS ARE IN METERS UNLESS OTHERWISE SHOWN

PLANTING PLAN

SCALE 1:500

FOR COMPLETE R/W AND ACCURATE ACCESS DATA, SEE R/W RECORD MAPS AT DISTRICT OFFICE.

THIS PLAN ACCURATE FOR PLANTING WORK ONLY.

PP-2

STATE OF CALIFORNIA - DEPARTMENT OF TRANSPORTATION
Caltrans
LANDSCAPE

SENIOR LANDSCAPE ARCHITECT: K. MURRAY
CALCULATED-DESIGNED BY: JEFFREY L. PIETRZAK
CHECKED BY: T. CHRIS JOHNSON
REVISED BY: JLP
DATE REVISED: 7/1/10

LAST REVISION 00-00-00
DATE PLOTTED => 02-AUG-2010
TIME PLOTTED => 15:29

BORDER LAST REVISED 3/1/2007
RELATIVE BORDER SCALE IS IN MILLIMETERS 0 20 40 60 80
USERNAME => s128033
DGN FILE => 31f500ti002.dgn
CU 03340
EA 1F5001

Dist	COUNTY	ROUTE	KILOMETER POST TOTAL PROJECT	SHEET No.	TOTAL SHEETS
03	Sut	99	T49.2/R51.8	21	88

Jeffrey L. Pietrzak 7-12-10
LICENSED LANDSCAPE ARCHITECT

7-26-10
PLANS APPROVAL DATE

LICENSED LANDSCAPE ARCHITECT JEFFREY L. PIETRZAK No. 4457 Signature 12-31-11 Renewal Date 5-1-10 Date STATE OF CALIFORNIA

THE STATE OF CALIFORNIA OR ITS OFFICERS OR AGENTS SHALL NOT BE RESPONSIBLE FOR THE ACCURACY OR COMPLETENESS OF ELECTRONIC COPIES OF THIS PLAN SHEET.

Caltrans Metric

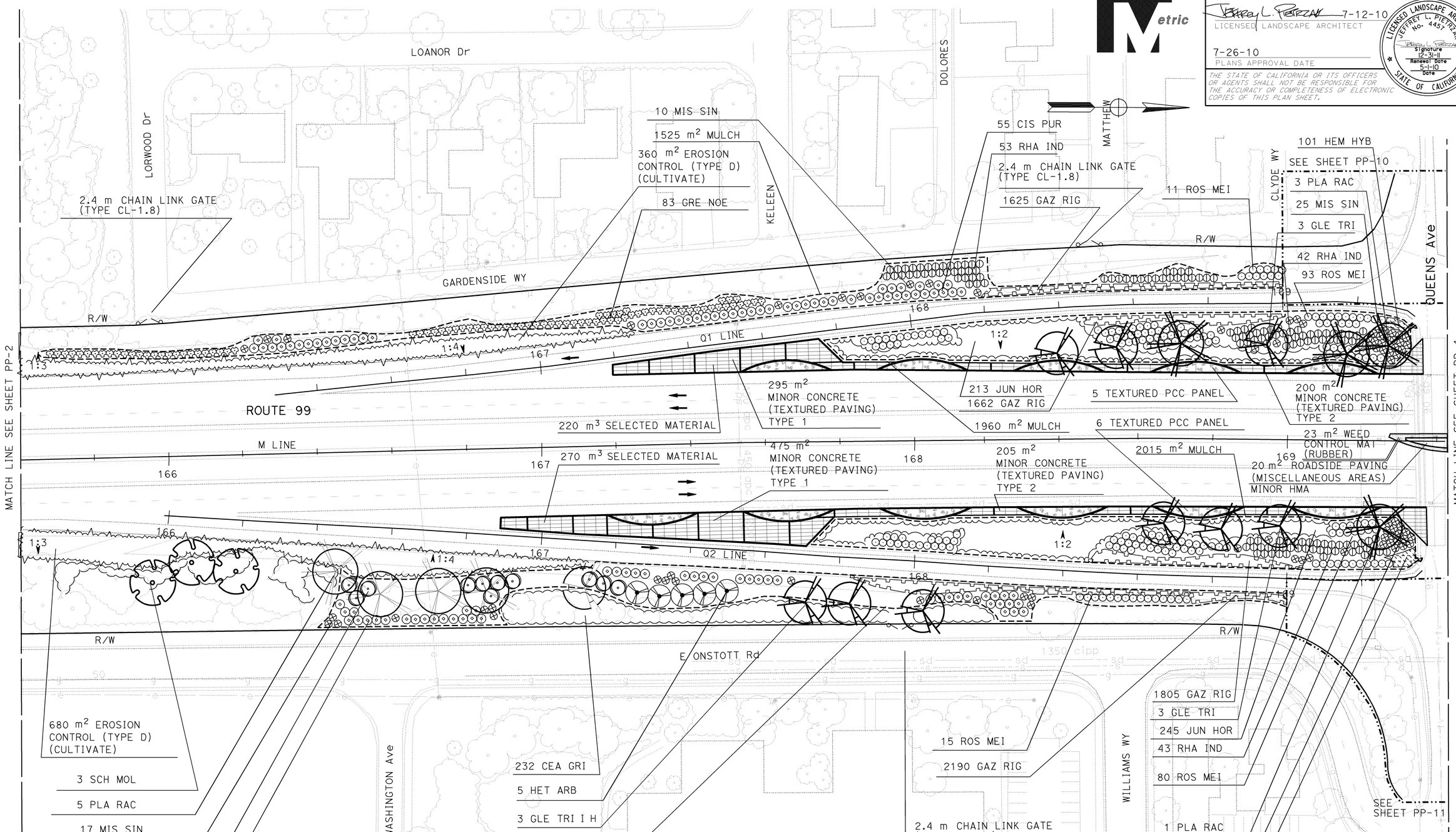

ALL DIMENSIONS ARE IN METERS UNLESS OTHERWISE SHOWN

PLANTING PLAN

SCALE 1:500

PP-3

FOR COMPLETE R/W AND ACCURATE ACCESS DATA, SEE R/W RECORD MAPS AT DISTRICT OFFICE.

THIS PLAN ACCURATE FOR PLANTING WORK ONLY.

STATE OF CALIFORNIA - DEPARTMENT OF TRANSPORTATION
Caltrans
LANDSCAPE

SENIOR LANDSCAPE ARCHITECT: K. MURRAY
CALCULATED-DESIGNED BY: JEFFREY L. PIETRZAK
CHECKED BY: T. CHRIS JOHNSON
REVISED BY: JLP
DATE REVISED: 7/1/10

LAST REVISION 00-00-00
DATE PLOTTED => 02-AUG-2010
TIME PLOTTED => 15:29

Dist	COUNTY	ROUTE	KILOMETER POST TOTAL PROJECT	SHEET No.	TOTAL SHEETS
03	Sut	99	T49.2/R51.8	22	88

Jeffrey L. Pietrzak 7-12-10
LICENSED LANDSCAPE ARCHITECT

7-26-10
PLANS APPROVAL DATE

LICENSED LANDSCAPE ARCHITECT JEFFREY L. PIETRZAK No. 4457 Signature 12-31-11 Renewal Date 5-1-10 Date STATE OF CALIFORNIA

THE STATE OF CALIFORNIA OR ITS OFFICERS OR AGENTS SHALL NOT BE RESPONSIBLE FOR THE ACCURACY OR COMPLETENESS OF ELECTRONIC COPIES OF THIS PLAN SHEET.

Caltrans Metric

NOTES:
1) SEE DETAIL FOR MAINTANANCE VEHICLE PULLOUT

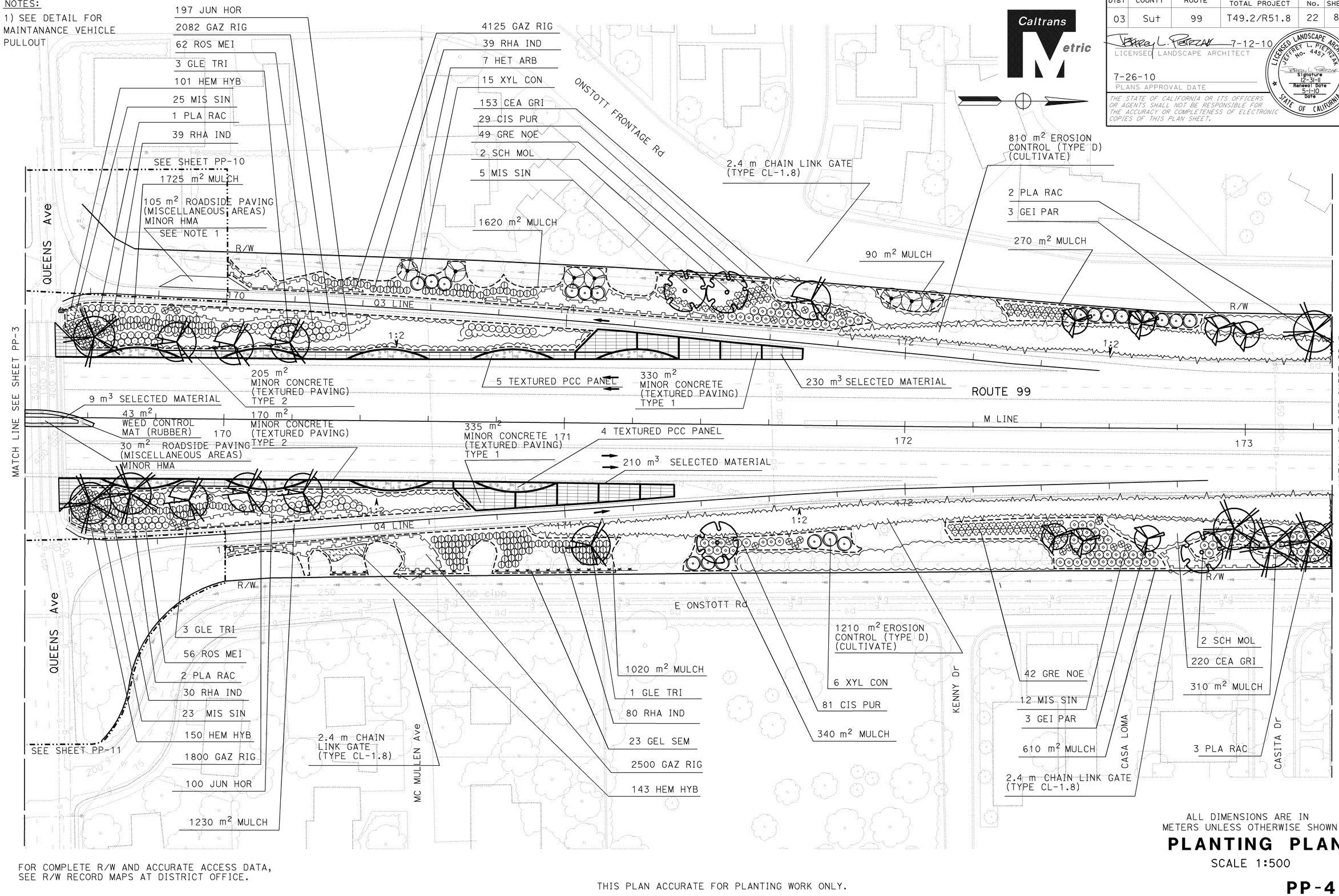

ALL DIMENSIONS ARE IN METERS UNLESS OTHERWISE SHOWN

PLANTING PLAN

SCALE 1:500

FOR COMPLETE R/W AND ACCURATE ACCESS DATA, SEE R/W RECORD MAPS AT DISTRICT OFFICE.

THIS PLAN ACCURATE FOR PLANTING WORK ONLY.

PP-4

CALCULATED-DESIGNED BY	JEFFREY L. PIETRZAK
CHECKED BY	T. CHRIS JOHNSON
REVISED BY	JLP
DATE REVISED	7/1/10
SENIOR LANDSCAPE ARCHITECT	K. MURRAY

STATE OF CALIFORNIA - DEPARTMENT OF TRANSPORTATION
Caltrans
LANDSCAPE

LAST REVISION 00-00-00
DATE PLOTTED => 02-AUG-2010
TIME PLOTTED => 15:29

Dist	COUNTY	ROUTE	KILOMETER POST TOTAL PROJECT	SHEET No.	TOTAL SHEETS
03	Sut	99	T49.2/R51.8	23	88

Jeffrey L. Pietrzak 7-12-10
LICENSED LANDSCAPE ARCHITECT

7-26-10
PLANS APPROVAL DATE

LICENSED LANDSCAPE ARCHITECT JEFFREY L. PIETRZAK No. 4457 Signature 12-31-11 Renewal Date 5-1-10 Date STATE OF CALIFORNIA

THE STATE OF CALIFORNIA OR ITS OFFICERS OR AGENTS SHALL NOT BE RESPONSIBLE FOR THE ACCURACY OR COMPLETENESS OF ELECTRONIC COPIES OF THIS PLAN SHEET.

Caltrans Metric

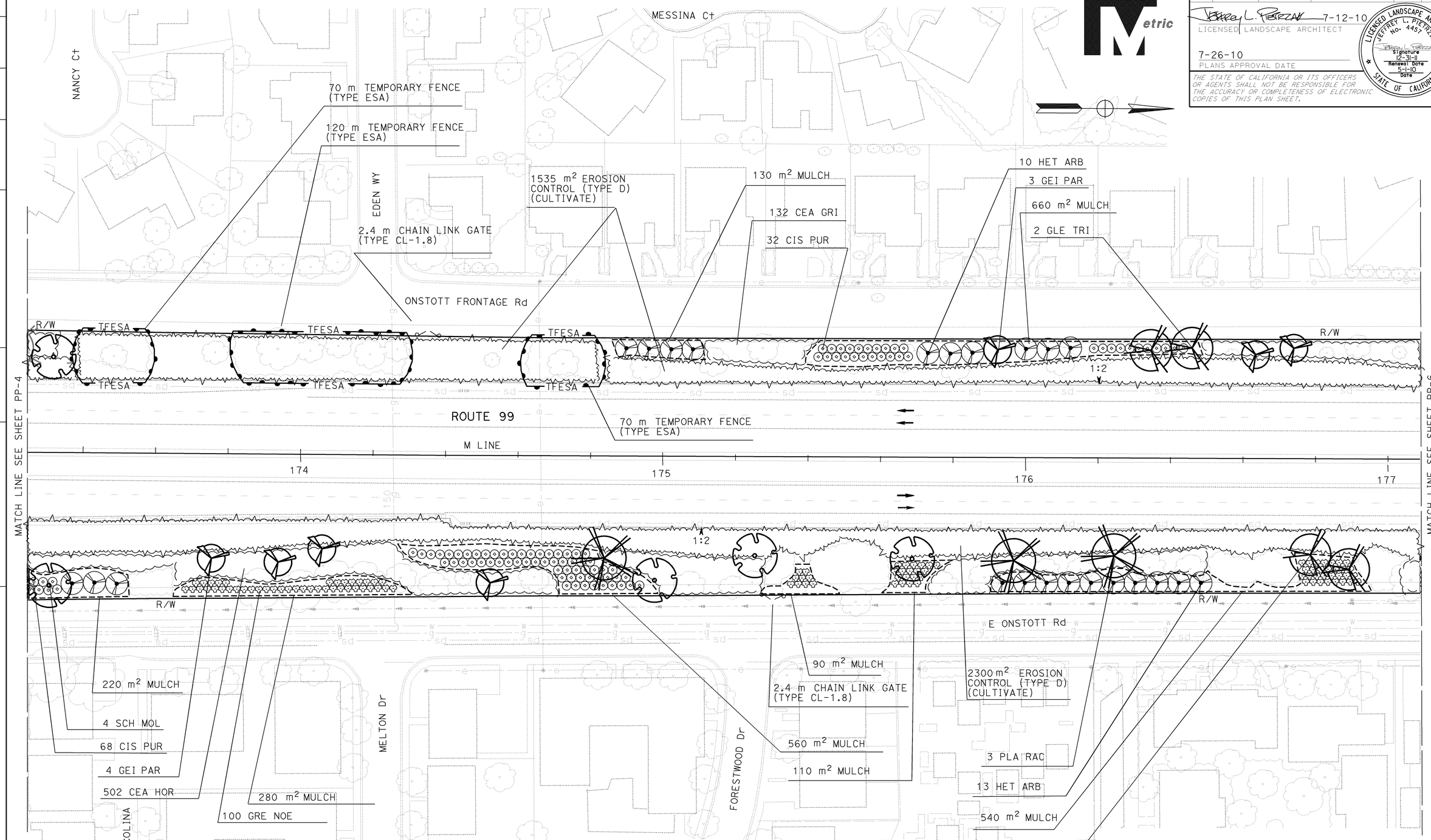

ALL DIMENSIONS ARE IN METERS UNLESS OTHERWISE SHOWN

PLANTING PLAN

SCALE 1:500

PP-5

FOR COMPLETE R/W AND ACCURATE ACCESS DATA, SEE R/W RECORD MAPS AT DISTRICT OFFICE.

THIS PLAN ACCURATE FOR PLANTING WORK ONLY.

CALCULATED-DESIGNED BY	JLP
CHECKED BY	T. CHRIS JOHNSON
REVISED BY	JEFFREY L. PIETRZAK
DATE REVISED	7/1/10
SENIOR LANDSCAPE ARCHITECT	K. MURRAY

STATE OF CALIFORNIA - DEPARTMENT OF TRANSPORTATION
Caltrans
LANDSCAPE

LAST REVISION 00-00-00
DATE PLOTTED => 02-AUG-2010
TIME PLOTTED => 15:29

Dist	COUNTY	ROUTE	KILOMETER POST TOTAL PROJECT	SHEET No.	TOTAL SHEETS
03	Sut	99	T49.2/R51.8	24	88

Jeffrey L. Pietrzak 7-12-10
LICENSED LANDSCAPE ARCHITECT

7-26-10
PLANS APPROVAL DATE

LICENSED LANDSCAPE ARCHITECT JEFFREY L. PIETRZAK No. 4457 Signature 12-31-11 Renewal Date 5-1-10 Date STATE OF CALIFORNIA

THE STATE OF CALIFORNIA OR ITS OFFICERS OR AGENTS SHALL NOT BE RESPONSIBLE FOR THE ACCURACY OR COMPLETENESS OF ELECTRONIC COPIES OF THIS PLAN SHEET.

Caltrans Metric

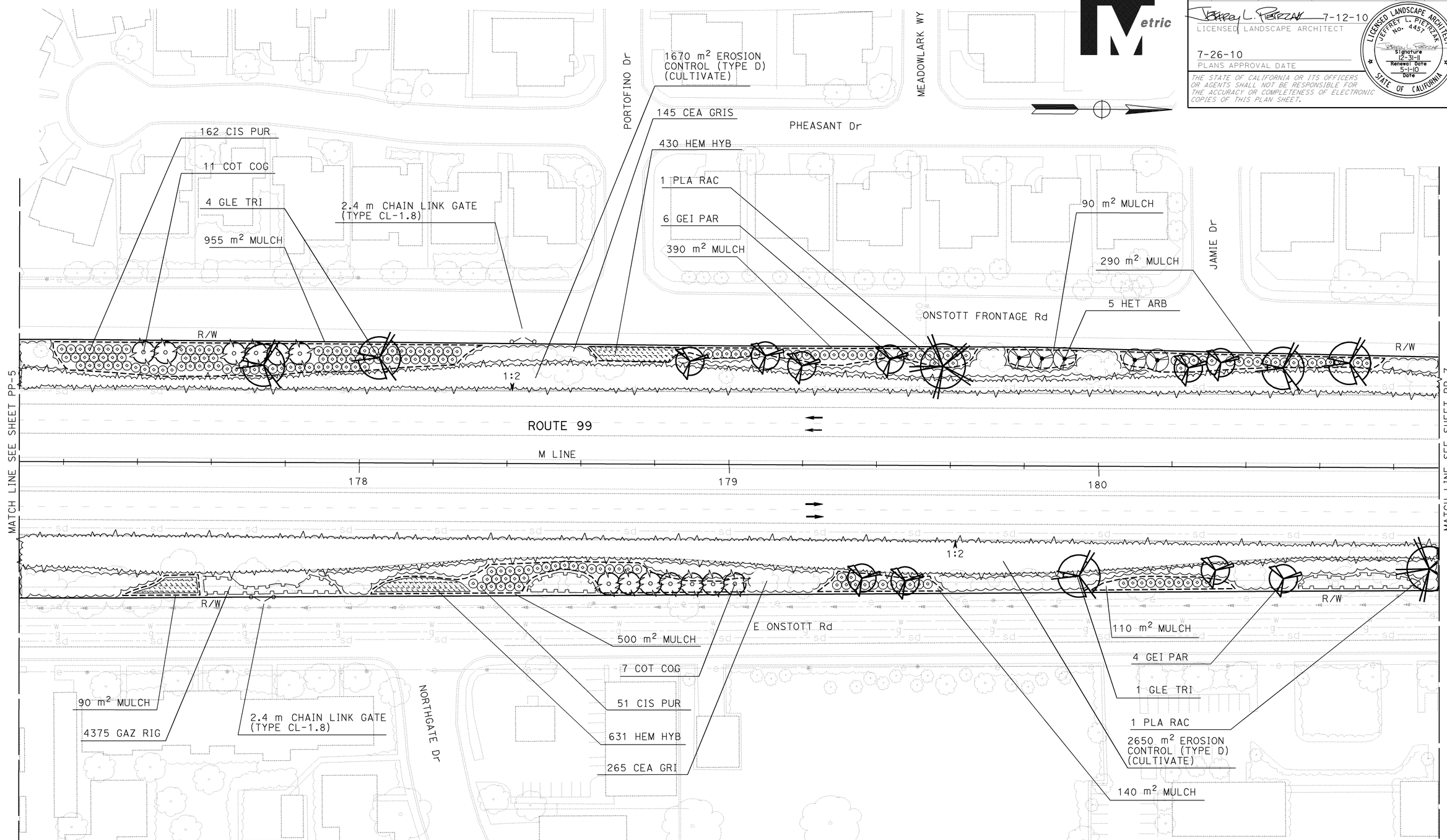

ALL DIMENSIONS ARE IN METERS UNLESS OTHERWISE SHOWN

PLANTING PLAN

SCALE 1:500

PP-6

FOR COMPLETE R/W AND ACCURATE ACCESS DATA, SEE R/W RECORD MAPS AT DISTRICT OFFICE.

THIS PLAN ACCURATE FOR PLANTING WORK ONLY.

REVISED BY	JLP
DATE REVISED	7/1/10
CALCULATED-DESIGNED BY	JEFFREY L. PIETRZAK
CHECKED BY	T. CHRIS JOHNSON
SENIOR LANDSCAPE ARCHITECT	K. MURRAY

STATE OF CALIFORNIA - DEPARTMENT OF TRANSPORTATION
Caltrans
LANDSCAPE

LAST REVISION 00-00-00 | DATE PLOTTED => 02-AUG-2010 | TIME PLOTTED => 15:29

Dist	COUNTY	ROUTE	KILOMETER POST TOTAL PROJECT	SHEET No.	TOTAL SHEETS
03	Sut	99	T49.2/R51.8	25	88

Caltrans Metric

Jeffrey L. Pietrzak 7-12-10
LICENSED LANDSCAPE ARCHITECT

7-26-10
PLANS APPROVAL DATE

LICENSED LANDSCAPE ARCHITECT JEFFREY L. PIETRZAK No. 4457 Signature 12-31-11 Renewal Date 5-1-10 Date STATE OF CALIFORNIA

THE STATE OF CALIFORNIA OR ITS OFFICERS OR AGENTS SHALL NOT BE RESPONSIBLE FOR THE ACCURACY OR COMPLETENESS OF ELECTRONIC COPIES OF THIS PLAN SHEET.

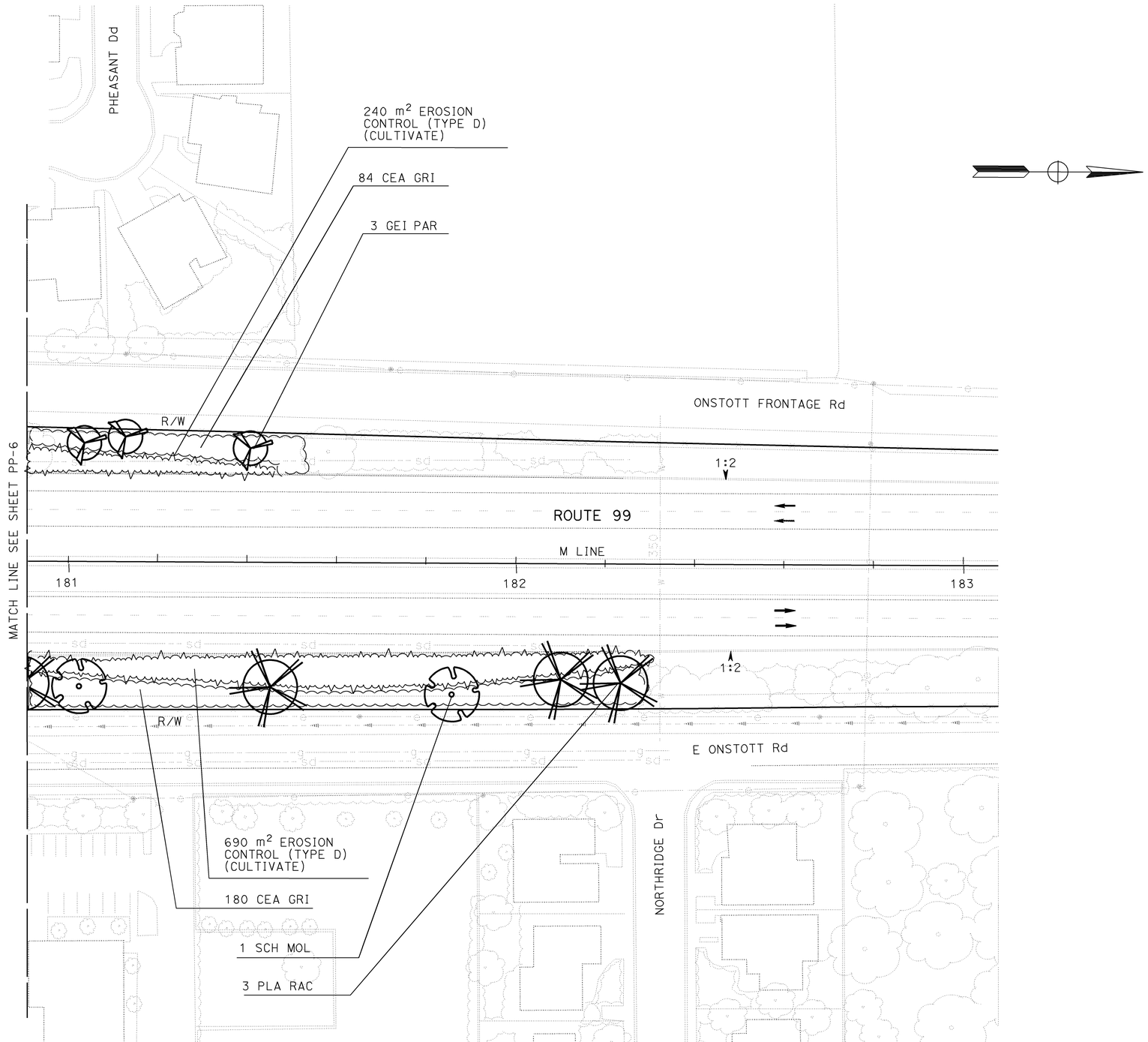

FOR COMPLETE R/W AND ACCURATE ACCESS DATA, SEE R/W RECORD MAPS AT DISTRICT OFFICE.

THIS PLAN ACCURATE FOR PLANTING WORK ONLY.

ALL DIMENSIONS ARE IN METERS UNLESS OTHERWISE SHOWN

PLANTING PLAN

SCALE 1:500

PP-7

STATE OF CALIFORNIA - DEPARTMENT OF TRANSPORTATION
Caltrans
LANDSCAPE

SENIOR LANDSCAPE ARCHITECT: K. MURRAY
CALCULATED-DESIGNED BY: JEFFREY L. PIETRZAK
CHECKED BY: T. CHRIS JOHNSON
REVISED BY: JLP
DATE REVISED: 7/1/10

LAST REVISION 00-00-00
DATE PLOTTED => 02-AUG-2010
TIME PLOTTED => 15:29

Dist	COUNTY	ROUTE	KILOMETER POST TOTAL PROJECT	SHEET No.	TOTAL SHEETS
03	Sut	99	T49.2/R51.8	26	88

Jeffrey L. Pietrzak 7-12-10
LICENSED LANDSCAPE ARCHITECT

7-26-10
PLANS APPROVAL DATE

LICENSED LANDSCAPE ARCHITECT JEFFREY L. PIETRZAK No. 4457 Signature 12-31-11 Renewal Date 5-1-10 Date STATE OF CALIFORNIA

THE STATE OF CALIFORNIA OR ITS OFFICERS OR AGENTS SHALL NOT BE RESPONSIBLE FOR THE ACCURACY OR COMPLETENESS OF ELECTRONIC COPIES OF THIS PLAN SHEET.

Caltrans Metric

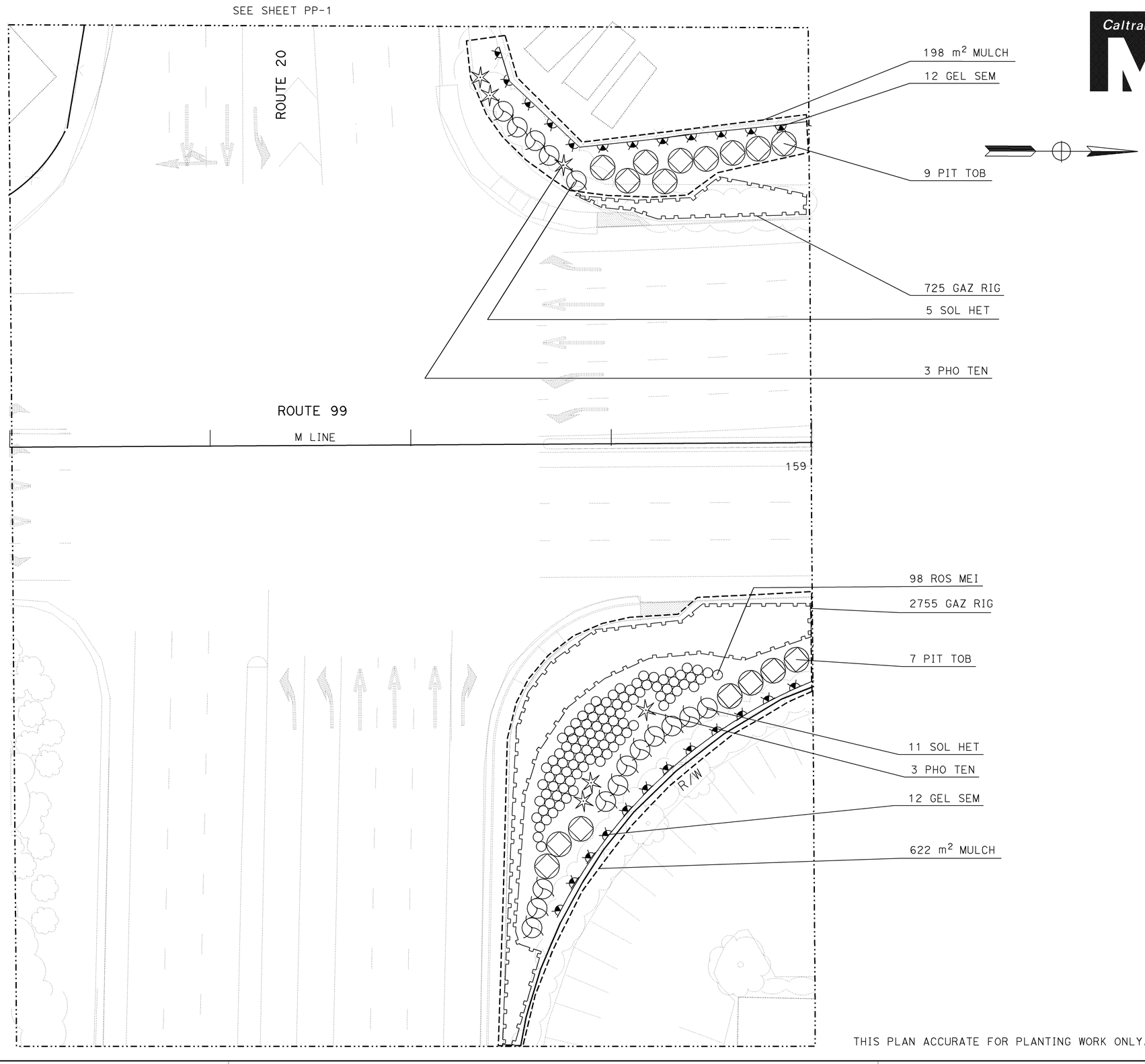

FOR COMPLETE R/W AND ACCURATE ACCESS DATA, SEE R/W RECORD MAPS AT DISTRICT OFFICE.

ALL DIMENSIONS ARE IN METERS UNLESS OTHERWISE SHOWN

PLANTING PLAN

SCALE 1:200

THIS PLAN ACCURATE FOR PLANTING WORK ONLY.

PP-8

STATE OF CALIFORNIA - DEPARTMENT OF TRANSPORTATION
Caltrans
LANDSCAPE

SENIOR LANDSCAPE ARCHITECT: K. MURRAY
CALCULATED-DESIGNED BY: JEFFREY L. PIETRZAK
CHECKED BY: T. CHRIS JOHNSON
REVISED BY: JLP
DATE REVISED: 7/1/10

LAST REVISION 00-00-00
DATE PLOTTED => 02-AUG-2010
TIME PLOTTED => 15:29

Dist	COUNTY	ROUTE	KILOMETER POST TOTAL PROJECT	SHEET No.	TOTAL SHEETS
03	Sut	99	T49.2/R51.8	27	88

Caltrans Metric

Jeffrey L. Pietrzak 7-12-10
LICENSED LANDSCAPE ARCHITECT

7-26-10
PLANS APPROVAL DATE

LICENSED LANDSCAPE ARCHITECT JEFFREY L. PIETRZAK No. 4457 Signature 12-31-11 Renewal Date 5-1-10 Date STATE OF CALIFORNIA

THE STATE OF CALIFORNIA OR ITS OFFICERS OR AGENTS SHALL NOT BE RESPONSIBLE FOR THE ACCURACY OR COMPLETENESS OF ELECTRONIC COPIES OF THIS PLAN SHEET.

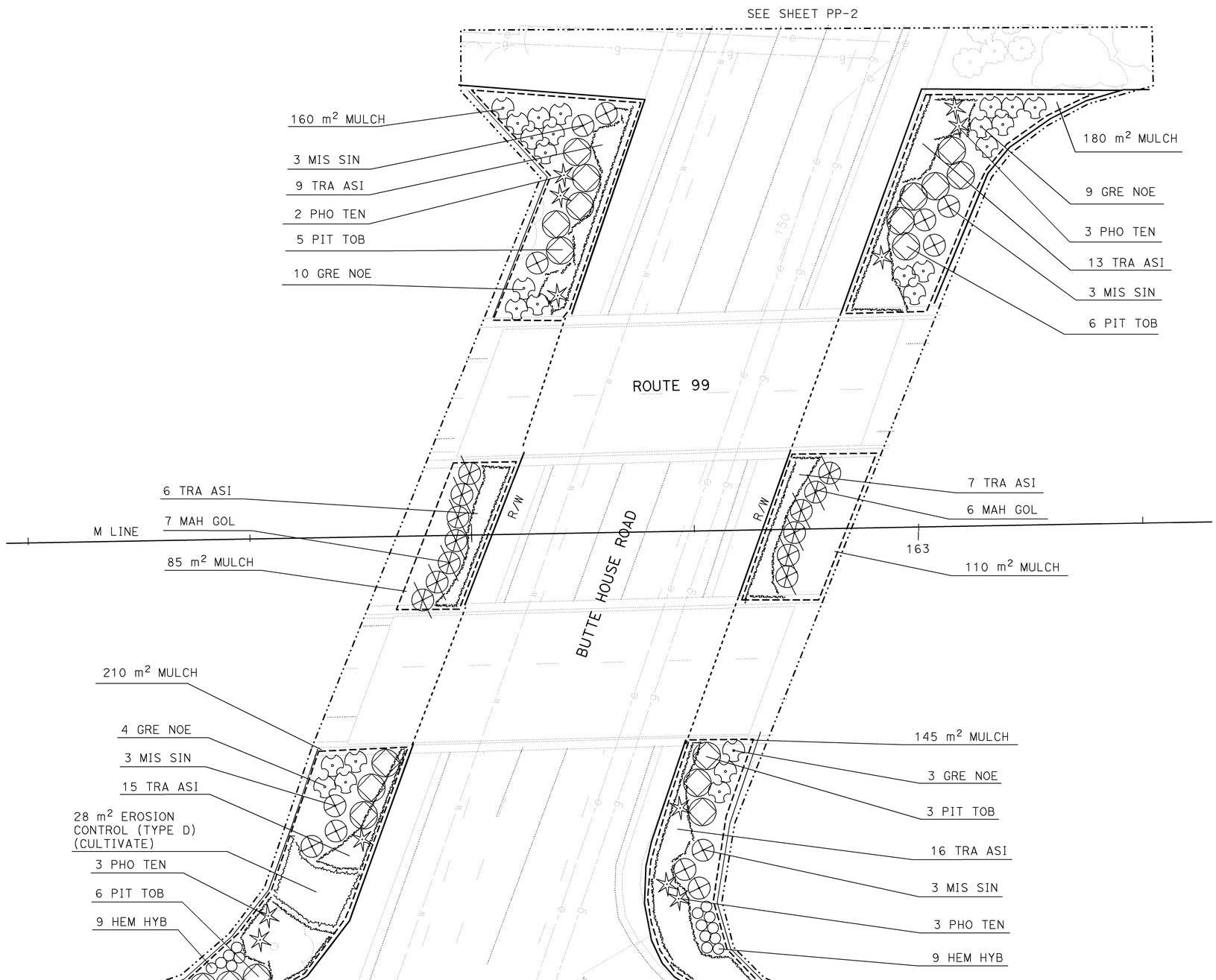

FOR COMPLETE R/W AND ACCURATE ACCESS DATA, SEE R/W RECORD MAPS AT DISTRICT OFFICE.

ALL DIMENSIONS ARE IN METERS UNLESS OTHERWISE SHOWN

THIS PLAN ACCURATE FOR PLANTING WORK ONLY.

PLANTING PLAN

SCALE 1:200

PP-9

CALCULATED-DESIGNED BY	JEFFREY L. PIETRZAK
CHECKED BY	T. CHRIS JOHNSON
REVISED BY	JLP
DATE REVISED	7/1/10
SENIOR LANDSCAPE ARCHITECT	K. MURRAY

STATE OF CALIFORNIA - DEPARTMENT OF TRANSPORTATION
Caltrans
LANDSCAPE

LAST REVISION 00-00-00 | DATE PLOTTED => 02-AUG-2010 | TIME PLOTTED => 15:29

Dist	COUNTY	ROUTE	KILOMETER POST TOTAL PROJECT	SHEET No.	TOTAL SHEETS
03	Sut	99	T49.2/R51.8	28	88

Jeffrey L. Pietrzak 7-12-10
LICENSED LANDSCAPE ARCHITECT

7-26-10
PLANS APPROVAL DATE

LICENSED LANDSCAPE ARCHITECT JEFFREY L. PIETRZAK No. 4457 Signature 12-31-11 Renewal Date 5-1-10 Date STATE OF CALIFORNIA

THE STATE OF CALIFORNIA OR ITS OFFICERS OR AGENTS SHALL NOT BE RESPONSIBLE FOR THE ACCURACY OR COMPLETENESS OF ELECTRONIC COPIES OF THIS PLAN SHEET.

Caltrans Metric

FOR COMPLETE R/W AND ACCURATE ACCESS DATA, SEE R/W RECORD MAPS AT DISTRICT OFFICE.

SEE SHEET PP-3 AND PP-4

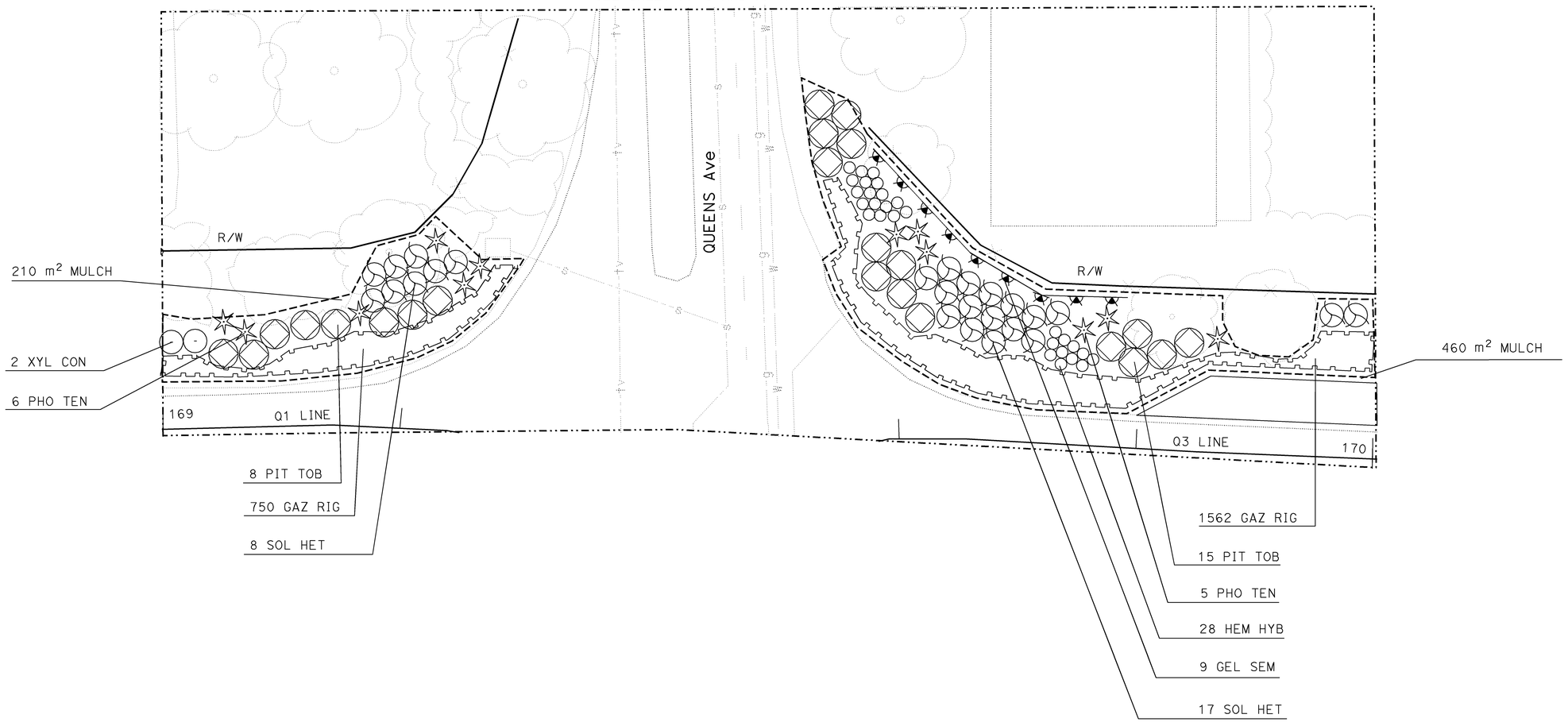

ALL DIMENSIONS ARE IN METERS UNLESS OTHERWISE SHOWN

PLANTING PLAN

SCALE 1:200

THIS PLAN ACCURATE FOR PLANTING WORK ONLY.

PP-10

CALCULATED-DESIGNED BY	JEFFREY L. PIETRZAK
CHECKED BY	T. CHRIS JOHNSON
REVISED BY	JLP
DATE REVISED	7/1/10
SENIOR LANDSCAPE ARCHITECT	K. MURRAY

STATE OF CALIFORNIA - DEPARTMENT OF TRANSPORTATION
Caltrans
LANDSCAPE

LAST REVISION 00-00-00 | DATE PLOTTED => 02-AUG-2010 | TIME PLOTTED => 15:29

Dist	COUNTY	ROUTE	KILOMETER POST TOTAL PROJECT	SHEET No.	TOTAL SHEETS
03	Sut	99	T49.2/R51.8	29	88

Jeffrey L. Pietrzak 7-12-10
LICENSED LANDSCAPE ARCHITECT

7-26-10
PLANS APPROVAL DATE

LICENSED LANDSCAPE ARCHITECT JEFFREY L. PIETRZAK No. 4457 Signature 12-31-11 Renewal Date 5-1-10 Date STATE OF CALIFORNIA

THE STATE OF CALIFORNIA OR ITS OFFICERS OR AGENTS SHALL NOT BE RESPONSIBLE FOR THE ACCURACY OR COMPLETENESS OF ELECTRONIC COPIES OF THIS PLAN SHEET.

Caltrans Metric

FOR COMPLETE R/W AND ACCURATE ACCESS DATA, SEE R/W RECORD MAPS AT DISTRICT OFFICE.

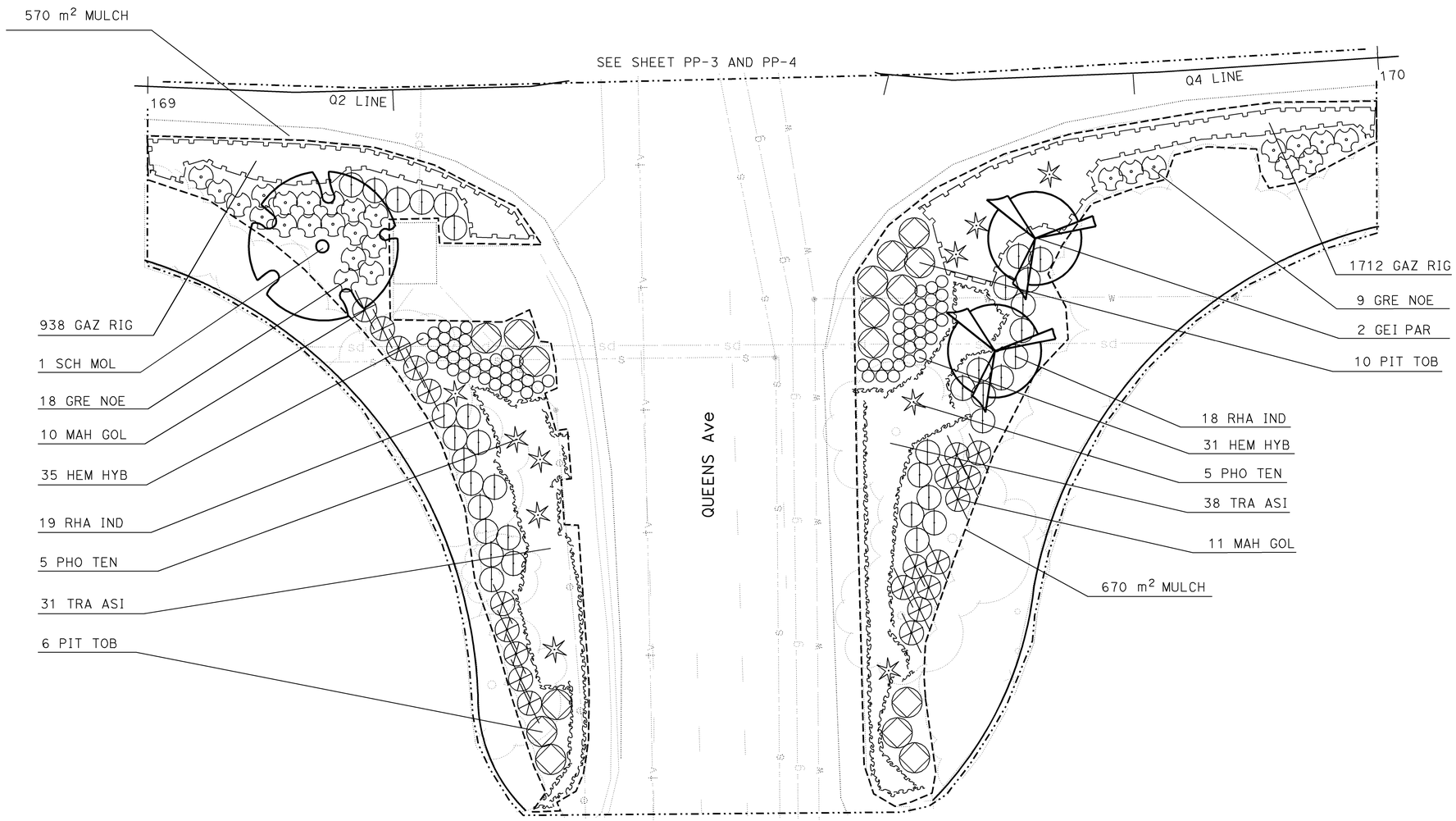

ALL DIMENSIONS ARE IN METERS UNLESS OTHERWISE SHOWN

PLANTING PLAN

SCALE 1:200

THIS PLAN ACCURATE FOR PLANTING WORK ONLY.

PP-11

STATE OF CALIFORNIA - DEPARTMENT OF TRANSPORTATION
Caltrans
LANDSCAPE

SENIOR LANDSCAPE ARCHITECT: K. MURRAY
CALCULATED-DESIGNED BY: JEFFREY L. PIETRZAK
CHECKED BY: T. CHRIS JOHNSON
REVISED BY: JLP
DATE REVISED: 7/1/10

LAST REVISION 00-00-00
DATE PLOTTED => 02-AUG-2010
TIME PLOTTED => 15:29

Dist	COUNTY	ROUTE	KILOMETER POST TOTAL PROJECT	SHEET No.	TOTAL SHEETS
03	Sut	99	T49.2/R51.8	30	88

Jeffrey L. Pietrzak 7-12-10
LICENSED LANDSCAPE ARCHITECT

7-26-10
PLANS APPROVAL DATE

LICENSED LANDSCAPE ARCHITECT JEFFREY L. PIETRZAK No. 4457 Signature 12-31-11 Renewal Date 5-1-10 Date STATE OF CALIFORNIA

THE STATE OF CALIFORNIA OR ITS OFFICERS OR AGENTS SHALL NOT BE RESPONSIBLE FOR THE ACCURACY OR COMPLETENESS OF ELECTRONIC COPIES OF THIS PLAN SHEET.

Caltrans Metric

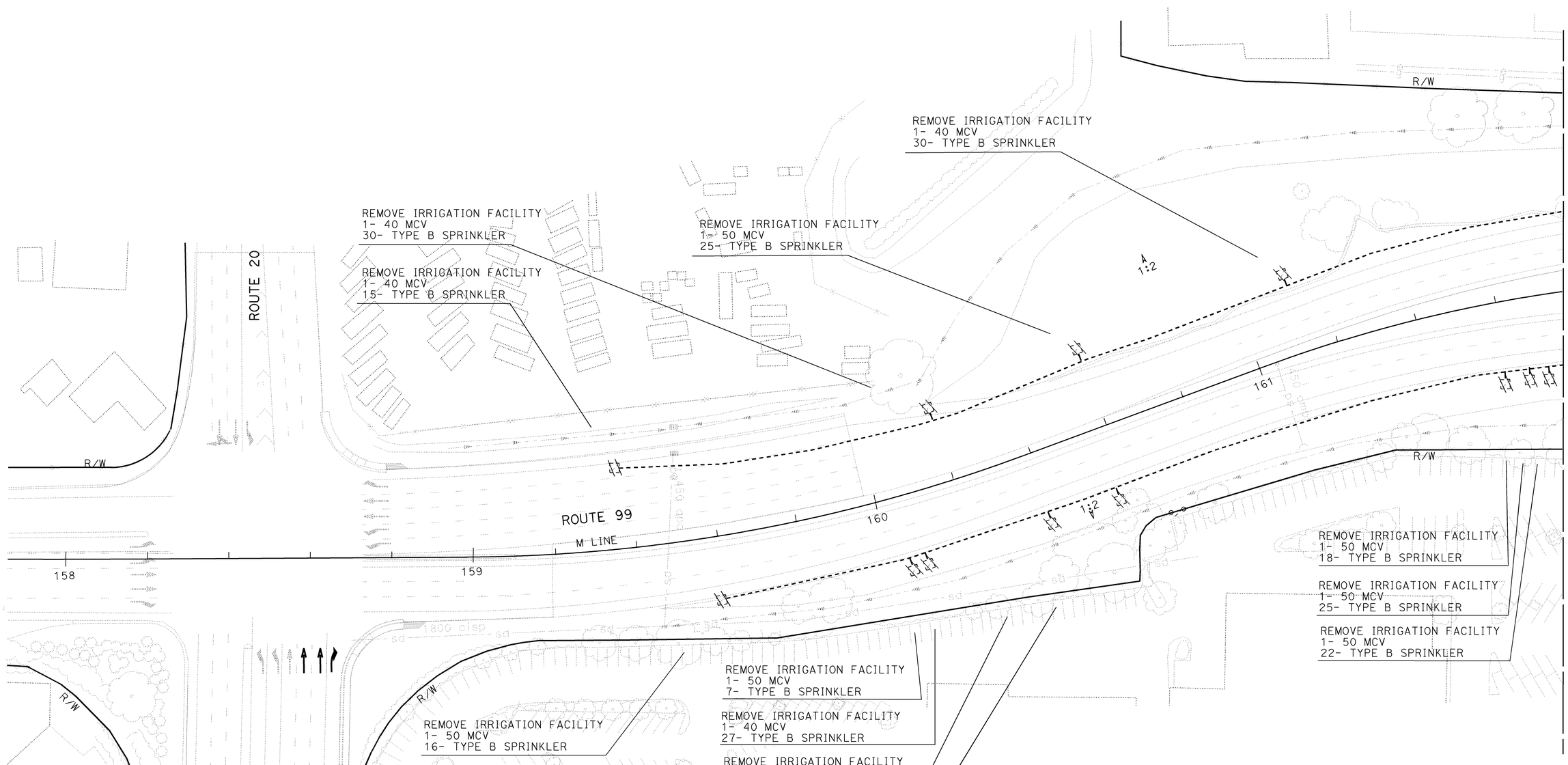

FOR COMPLETE R/W AND ACCURATE ACCESS DATA, SEE R/W RECORD MAPS AT DISTRICT OFFICE.

ALL IRRIGATION EQUIPMENT SIZES ARE SHOWN IN MILLIMETERS (DIAMETER NOMINAL) UNLESS OTHERWISE NOTED.

IRRIGATION REMOVAL PLAN

SCALE 1:500

IR-1

CALCULATED-DESIGNED BY	JEFFREY L. PIETRZAK	REVISED BY	JLP
CHECKED BY	T. CHRIS JOHNSON	DATE REVISED	7/1/10
SENIOR LANDSCAPE ARCHITECT	K. MURRAY		

STATE OF CALIFORNIA - DEPARTMENT OF TRANSPORTATION
Caltrans
LANDSCAPE

LAST REVISION 00-00-00 | DATE PLOTTED => 02-AUG-2010 | TIME PLOTTED => 15:29

Dist	COUNTY	ROUTE	KILOMETER POST TOTAL PROJECT	SHEET No.	TOTAL SHEETS
03	Sut	99	T49.2/R51.8	31	88

Jeffrey L. Pietrzak 7-12-10
LICENSED LANDSCAPE ARCHITECT

7-26-10
PLANS APPROVAL DATE

LICENSED LANDSCAPE ARCHITECT JEFFREY L. PIETRZAK No. 4457 Signature 12-31-11 Renewal Date 5-1-10 Date STATE OF CALIFORNIA

THE STATE OF CALIFORNIA OR ITS OFFICERS OR AGENTS SHALL NOT BE RESPONSIBLE FOR THE ACCURACY OR COMPLETENESS OF ELECTRONIC COPIES OF THIS PLAN SHEET.

Caltrans Metric

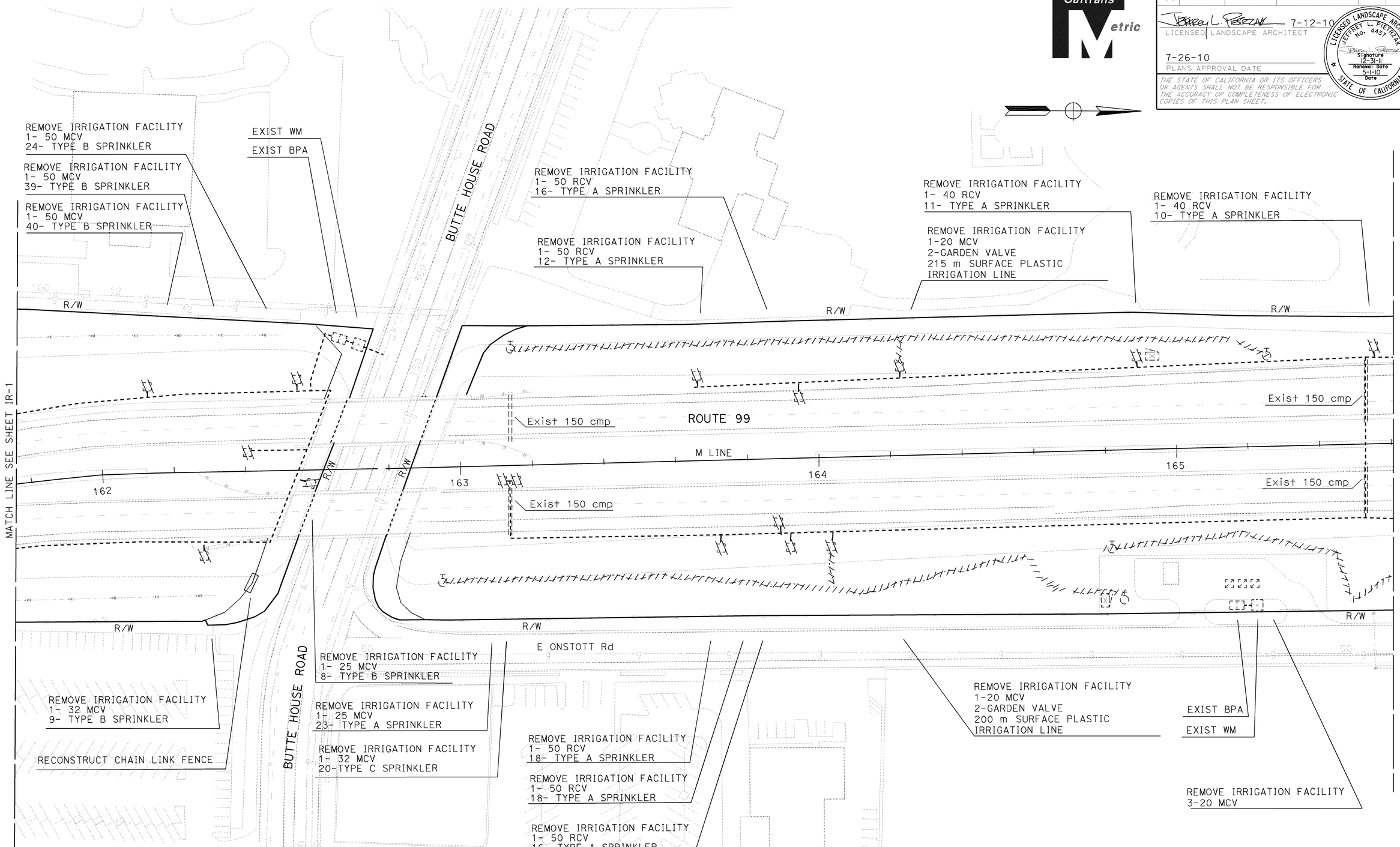

IRRIGATION REMOVAL PLAN

SCALE 1:500

IR-2

FOR COMPLETE R/W AND ACCURATE ACCESS DATA, SEE R/W RECORD MAPS AT DISTRICT OFFICE.

ALL IRRIGATION EQUIPMENT SIZES ARE SHOWN IN MILLIMETERS (DIAMETER NOMINAL) UNLESS OTHERWISE NOTED

CALCULATED-DESIGNED BY	JEFFREY L. PIETRZAK	REVISED BY	JLP
CHECKED BY	T. CHRIS JOHNSON	DATE REVISED	7/1/10
SENIOR LANDSCAPE ARCHITECT	K. MURRAY		

STATE OF CALIFORNIA - DEPARTMENT OF TRANSPORTATION
Caltrans
LANDSCAPE

LAST REVISION 00-00-00 DATE PLOTTED => 02-AUG-2010 TIME PLOTTED => 15:29

Dist	COUNTY	ROUTE	KILOMETER POST TOTAL PROJECT	SHEET No.	TOTAL SHEETS
03	Sut	99	T49.2/R51.8	32	88

Caltrans Metric

Jeffrey L. Pietrzak 7-12-10
LICENSED LANDSCAPE ARCHITECT

7-26-10
PLANS APPROVAL DATE

LICENSED LANDSCAPE ARCHITECT JEFFREY L. PIETRZAK No. 4457 Signature 12-31-11 Renewal Date 5-1-10 Date STATE OF CALIFORNIA

THE STATE OF CALIFORNIA OR ITS OFFICERS OR AGENTS SHALL NOT BE RESPONSIBLE FOR THE ACCURACY OR COMPLETENESS OF ELECTRONIC COPIES OF THIS PLAN SHEET.

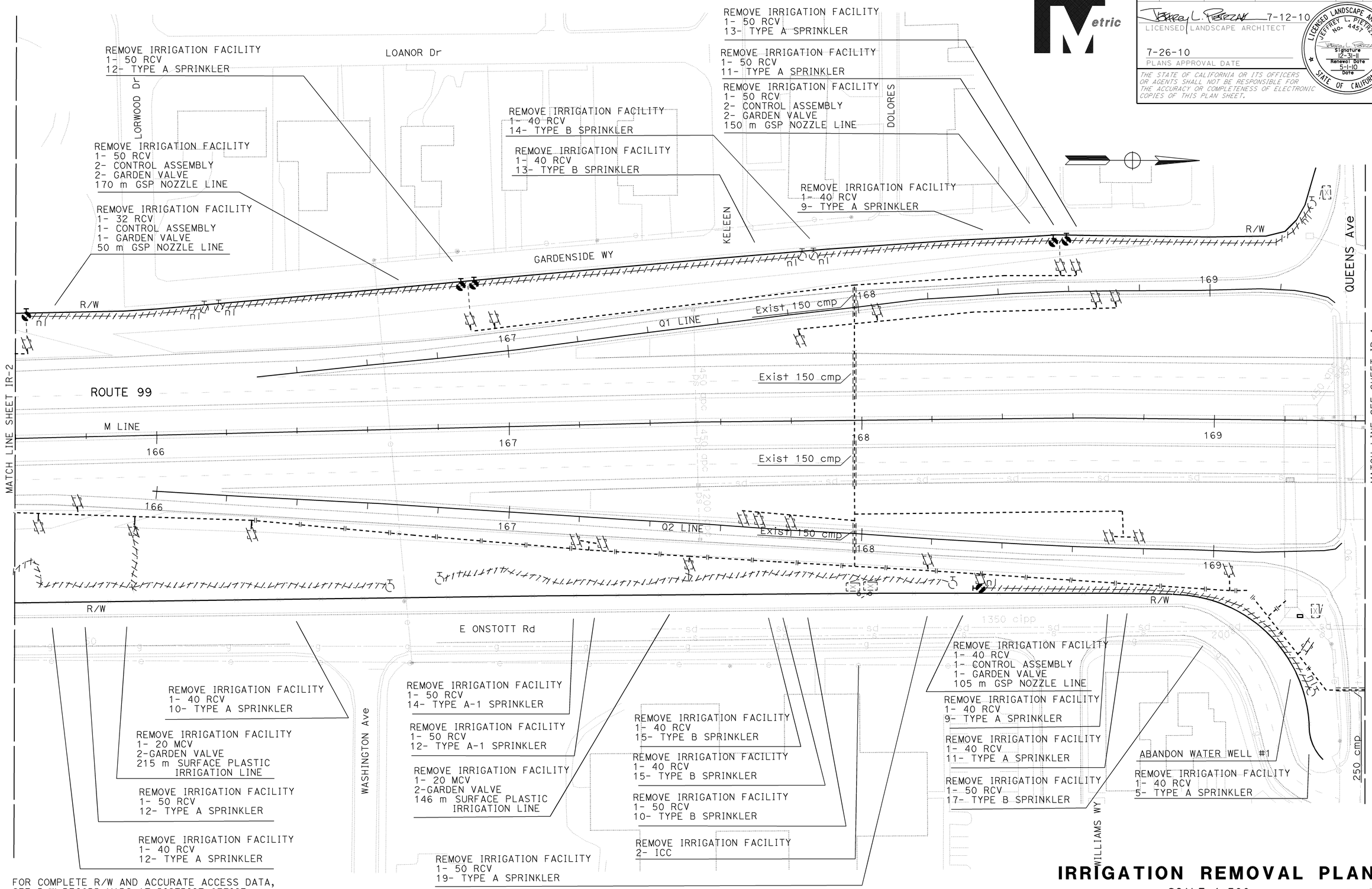

FOR COMPLETE R/W AND ACCURATE ACCESS DATA, SEE R/W RECORD MAPS AT DISTRICT OFFICE.

ALL IRRIGATION EQUIPMENT SIZES ARE SHOWN IN MILLIMETERS (DIAMETER NOMINAL) UNLESS OTHERWISE NOTED

IRRIGATION REMOVAL PLAN

SCALE 1:500

IR-3

REVISED BY	JLP
DATE REVISED	7/1/10
CALCULATED-DESIGNED BY	JEFFREY L. PIETRZAK
CHECKED BY	T. CHRIS JOHNSON
SENIOR LANDSCAPE ARCHITECT	K. MURRAY

STATE OF CALIFORNIA - DEPARTMENT OF TRANSPORTATION
Caltrans
LANDSCAPE

LAST REVISION 00-00-00 | DATE PLOTTED => 02-AUG-2010 | TIME PLOTTED => 15:29

Dist	COUNTY	ROUTE	KILOMETER POST TOTAL PROJECT	SHEET No.	TOTAL SHEETS
03	Sut	99	T49.2/R51.8	33	88

Jeffrey L. Pietrzak 7-12-10
LICENSED LANDSCAPE ARCHITECT

7-26-10
PLANS APPROVAL DATE

LICENSED LANDSCAPE ARCHITECT JEFFREY L. PIETRZAK No. 4457 Signature 12-31-11 Renewal Date 5-1-10 Date STATE OF CALIFORNIA

THE STATE OF CALIFORNIA OR ITS OFFICERS OR AGENTS SHALL NOT BE RESPONSIBLE FOR THE ACCURACY OR COMPLETENESS OF ELECTRONIC COPIES OF THIS PLAN SHEET.

Caltrans Metric

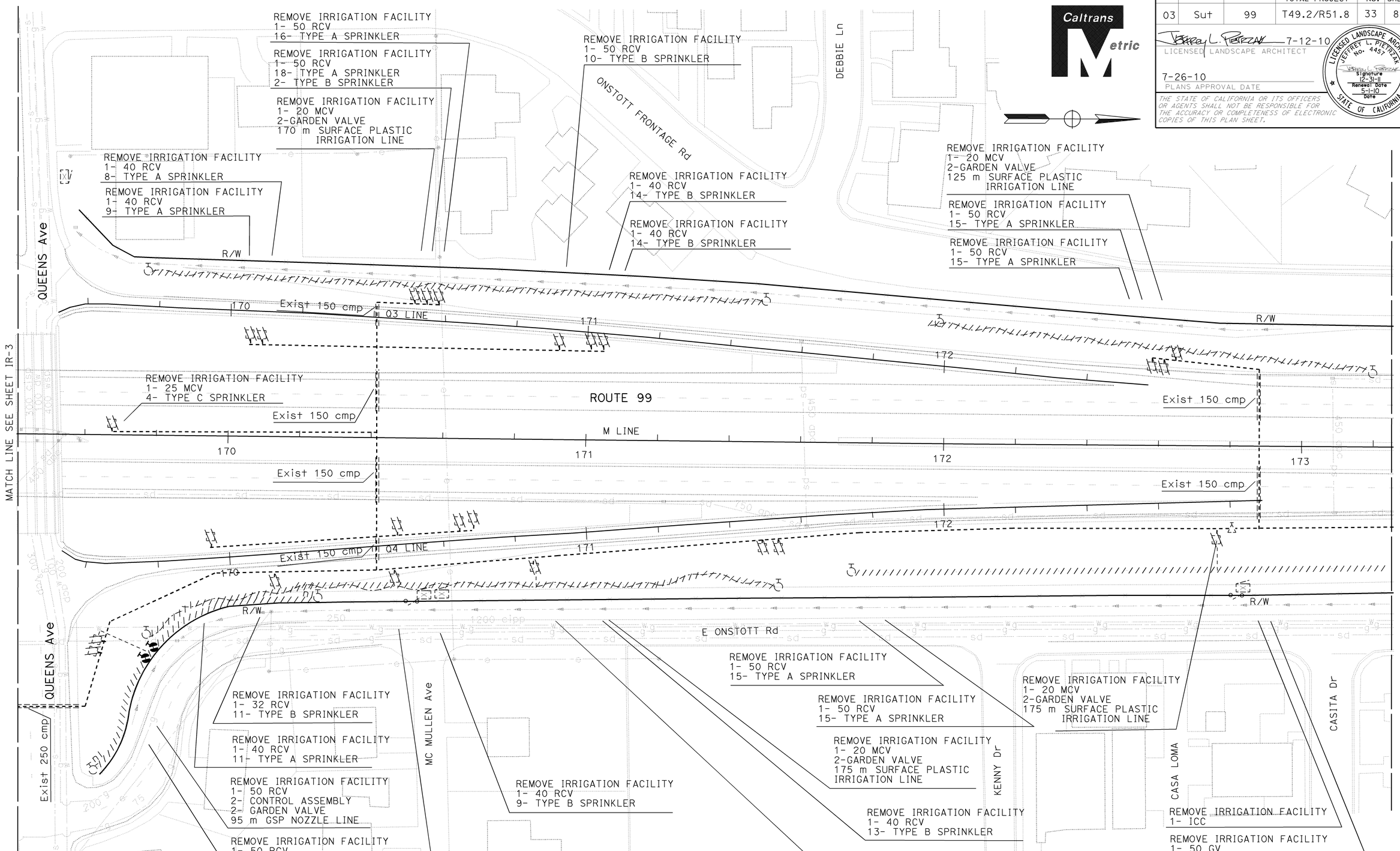

FOR COMPLETE R/W AND ACCURATE ACCESS DATA, SEE R/W RECORD MAPS AT DISTRICT OFFICE.

ALL IRRIGATION EQUIPMENT SIZES ARE SHOWN IN MILLIMETERS (DIAMETER NOMINAL) UNLESS OTHERWISE NOTED

IRRIGATION REMOVAL PLAN

SCALE 1:500

IR-4

JLP	7/1/10
REVISED BY	DATE REVISED
JEFFREY L. PIETRZAK	
T. CHRIS JOHNSON	
CALCULATED-DESIGNED BY	
CHECKED BY	
SENIOR LANDSCAPE ARCHITECT	
K. MURRAY	

STATE OF CALIFORNIA - DEPARTMENT OF TRANSPORTATION
Caltrans
LANDSCAPE

LAST REVISION 00-00-00 | DATE PLOTTED => 02-AUG-2010 | TIME PLOTTED => 15:29

Dist	COUNTY	ROUTE	KILOMETER POST TOTAL PROJECT	SHEET No.	TOTAL SHEETS
03	Sut	99	T49.2/R51.8	34	88

Jeffrey L. Pietrzak 7-12-10
LICENSED LANDSCAPE ARCHITECT

7-26-10
PLANS APPROVAL DATE

LICENSED LANDSCAPE ARCHITECT JEFFREY L. PIETRZAK No. 4457 Signature 12-31-11 Renewal Date 5-1-10 Date STATE OF CALIFORNIA

THE STATE OF CALIFORNIA OR ITS OFFICERS OR AGENTS SHALL NOT BE RESPONSIBLE FOR THE ACCURACY OR COMPLETENESS OF ELECTRONIC COPIES OF THIS PLAN SHEET.

Caltrans Metric

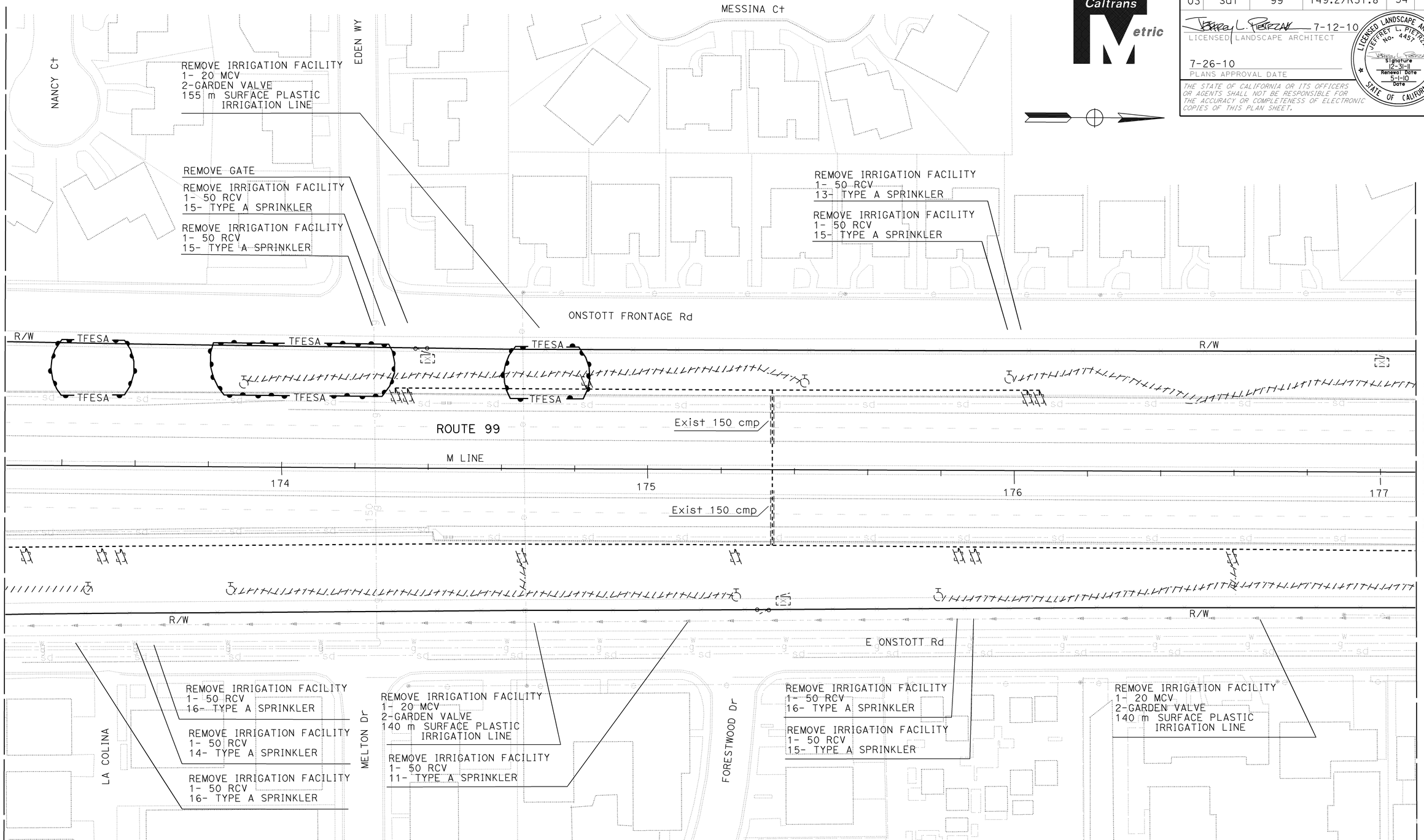

FOR COMPLETE R/W AND ACCURATE ACCESS DATA, SEE R/W RECORD MAPS AT DISTRICT OFFICE.

ALL IRRIGATION EQUIPMENT SIZES ARE SHOWN IN MILLIMETERS (DIAMETER NOMINAL) UNLESS OTHERWISE NOTED.

IRRIGATION REMOVAL PLAN

SCALE 1:500

IR-5

CALCULATED-DESIGNED BY	JEFFREY L. PIETRZAK
CHECKED BY	T. CHRIS JOHNSON
REVISED BY	JLP
DATE REVISED	7/1/10
SENIOR LANDSCAPE ARCHITECT	K. MURRAY

STATE OF CALIFORNIA - DEPARTMENT OF TRANSPORTATION
Caltrans
LANDSCAPE

LAST REVISION 00-00-00
DATE PLOTTED => 02-AUG-2010
TIME PLOTTED => 15:29

Dist	COUNTY	ROUTE	KILOMETER POST TOTAL PROJECT	SHEET No.	TOTAL SHEETS
03	Sut	99	T49.2/R51.8	35	88

Caltrans Metric

LICENSED LANDSCAPE ARCHITECT 7-12-10

7-26-10
PLANS APPROVAL DATE

LICENSED LANDSCAPE ARCHITECT JEFFREY L. PIETRZAK No. 4457 Signature 12-31-11 Renewal Date 5-1-10 Date STATE OF CALIFORNIA

THE STATE OF CALIFORNIA OR ITS OFFICERS OR AGENTS SHALL NOT BE RESPONSIBLE FOR THE ACCURACY OR COMPLETENESS OF ELECTRONIC COPIES OF THIS PLAN SHEET.

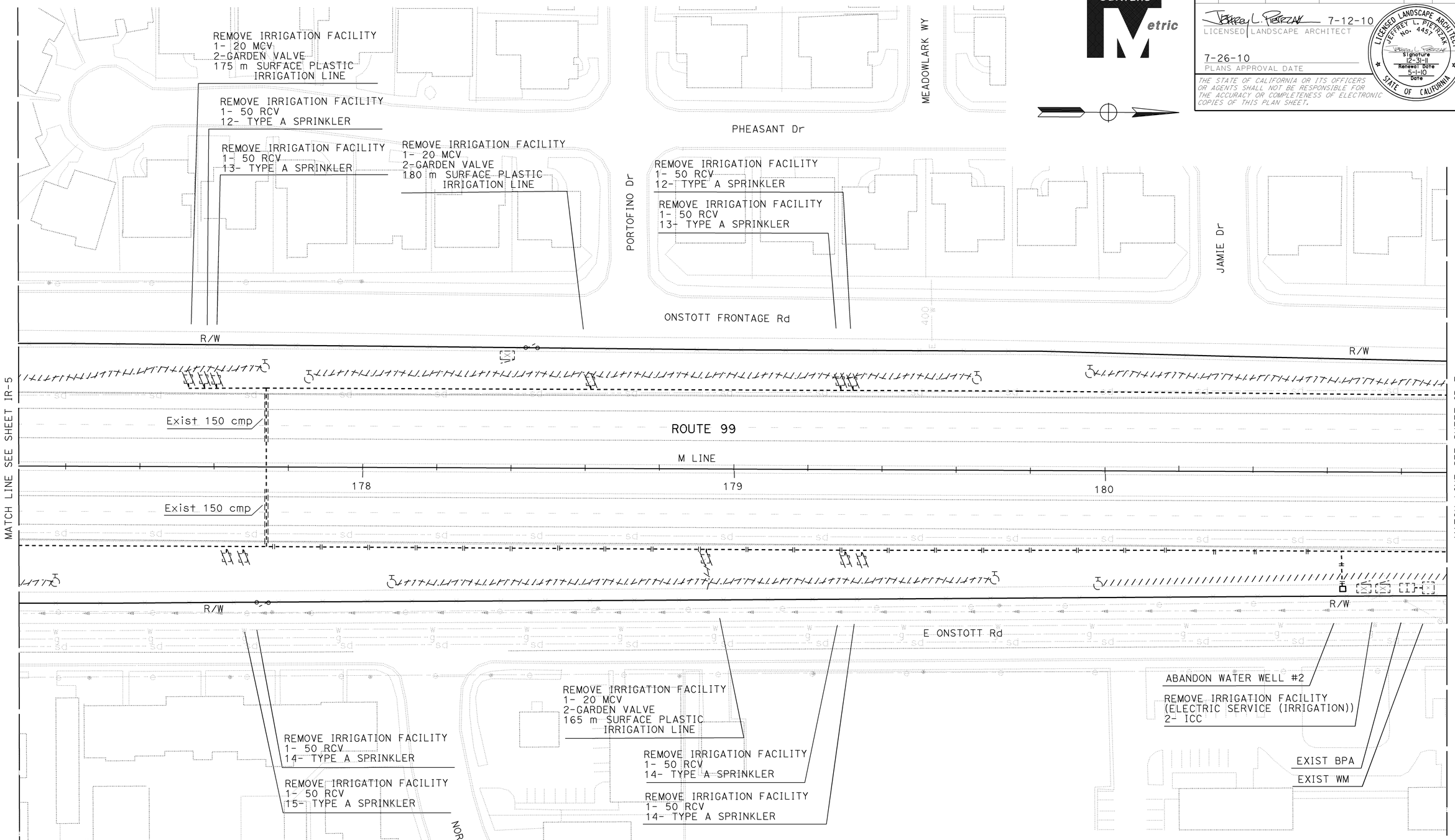

IRRIGATION REMOVAL PLAN

SCALE 1:500

FOR COMPLETE R/W AND ACCURATE ACCESS DATA, SEE R/W RECORD MAPS AT DISTRICT OFFICE.

ALL IRRIGATION EQUIPMENT SIZES ARE SHOWN IN MILLIMETERS (DIAMETER NOMINAL) UNLESS OTHERWISE NOTED.

IR-6

JEFFREY L. PIETRZAK	JLP		
T. CHRIS JOHNSON	REVISED BY	DATE REVISED	7/1/10
CALCULATED-DESIGNED BY			
CHECKED BY			
SENIOR LANDSCAPE ARCHITECT			
K. MURRAY			

STATE OF CALIFORNIA - DEPARTMENT OF TRANSPORTATION
Caltrans
LANDSCAPE

LAST REVISION 00-00-00 | DATE PLOTTED => 02-AUG-2010 | TIME PLOTTED => 15:29

Dist	COUNTY	ROUTE	KILOMETER POST TOTAL PROJECT	SHEET No.	TOTAL SHEETS
03	Sut	99	T49.2/R51.8	36	88

Jeffrey L. Pietrzak 7-12-10
LICENSED LANDSCAPE ARCHITECT

7-26-10
PLANS APPROVAL DATE

LICENSED LANDSCAPE ARCHITECT JEFFREY L. PIETRZAK No. 4457 Signature 12-31-11 Renewal Date 5-1-10 Date STATE OF CALIFORNIA

THE STATE OF CALIFORNIA OR ITS OFFICERS OR AGENTS SHALL NOT BE RESPONSIBLE FOR THE ACCURACY OR COMPLETENESS OF ELECTRONIC COPIES OF THIS PLAN SHEET.

Caltrans Metric

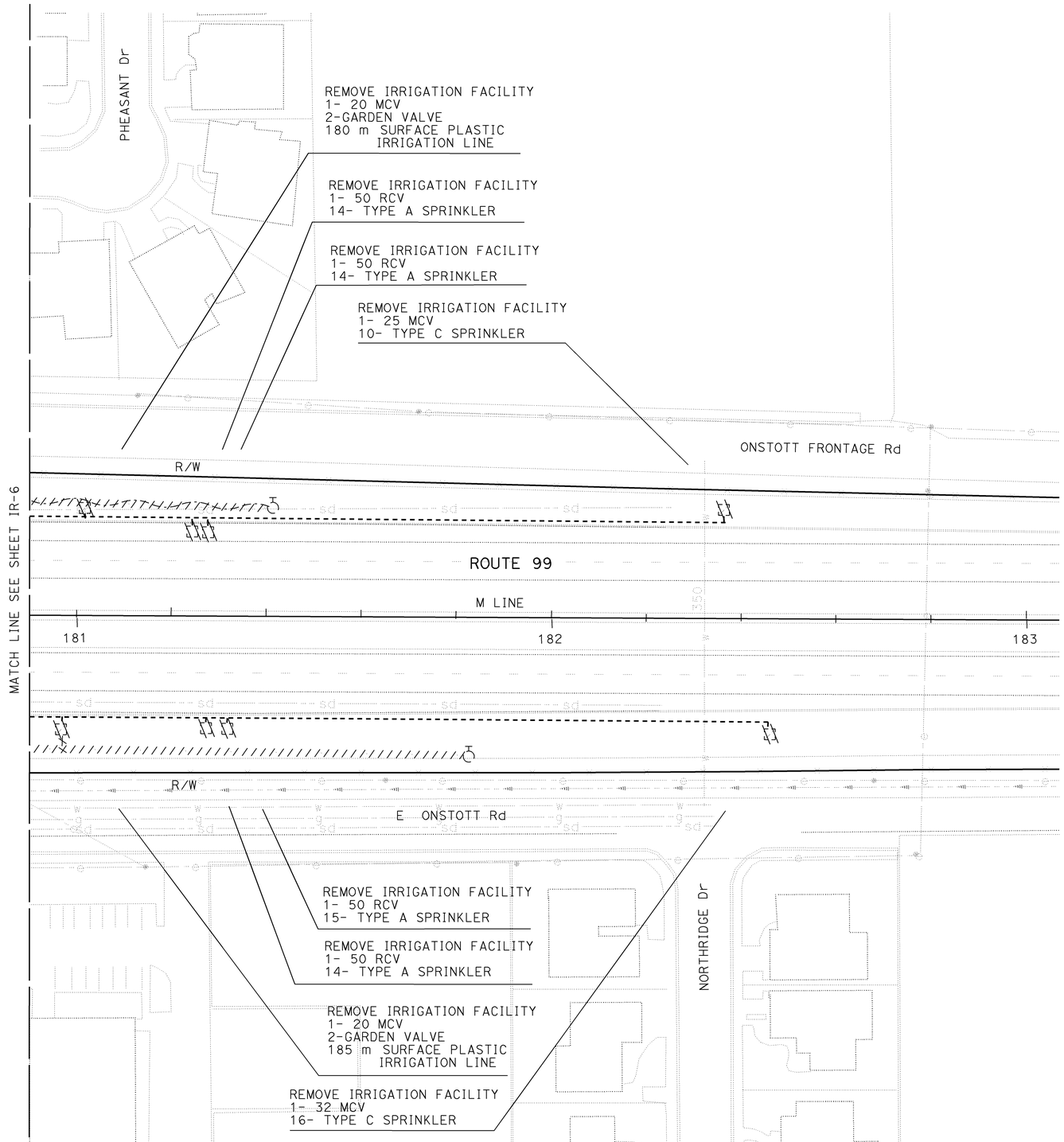

FOR COMPLETE R/W AND ACCURATE ACCESS DATA, SEE R/W RECORD MAPS AT DISTRICT OFFICE.

ALL IRRIGATION EQUIPMENT SIZES ARE SHOWN IN MILLIMETERS (DIAMETER NOMINAL) UNLESS OTHERWISE NOTED.

IRRIGATION REMOVAL PLAN

SCALE 1:500

IR-7

STATE OF CALIFORNIA - DEPARTMENT OF TRANSPORTATION	JEFFREY L. PIETRZAK	JLP
Caltrans	T. CHRIS JOHNSON	7/1/10
LANDSCAPE	K. MURRAY	
	CALCULATED-DESIGNED BY	REVISED BY
	CHECKED BY	DATE REVISED
	SENIOR LANDSCAPE ARCHITECT	

LAST REVISION 00-00-00 DATE PLOTTED => 02-AUG-2010 TIME PLOTTED => 15:29

Dist	COUNTY	ROUTE	KILOMETER POST TOTAL PROJECT	SHEET No.	TOTAL SHEETS
03	Sut	99	T49.2/R51.8	37	88

Caltrans Metric

Jeffrey L. Pietrzak 7-12-10
LICENSED LANDSCAPE ARCHITECT

7-26-10
PLANS APPROVAL DATE

LICENSED LANDSCAPE ARCHITECT JEFFREY L. PIETRZAK No. 4457 Signature 12-31-11 Renewal Date 5-1-10 Date STATE OF CALIFORNIA

THE STATE OF CALIFORNIA OR ITS OFFICERS OR AGENTS SHALL NOT BE RESPONSIBLE FOR THE ACCURACY OR COMPLETENESS OF ELECTRONIC COPIES OF THIS PLAN SHEET.

IRRIGATION NOTES:

1. PIPE SIZING DOWNSTREAM FROM REMOTE CONTROL VALVES SHALL BE AS SHOWN ON THE TABLES ON SHEET LD-1, UNLESS OTHERWISE NOTED.
2. PLASTIC PIPE (SUPPLY LINE), (MAIN) SERVING REMOTE CONTROL VALVES SHALL BE 100 mm PVC (PR 200), UNLESS OTHERWISE NOTED.
3. QUICK COUPLING VALVES (QCV) SHALL BE 20 mm INSTALLED ON A SWING JOINT (TYPE I) WITH A SPRINKLER PROTECTOR (TYPE I), UNLESS OTHERWISE NOTED.
4. LENGTH OF FLEXIBLE HOSE ON RISER TYPE V SHALL BE A MINIMUM 610 mm.
5. LOCATE SUPPLY LINE (MAIN) 1 m OFF R/W LINE OR THROUGH THE CENTER OF PLANTING AREAS WHENEVER POSSIBLE.
6. SPRINKLERS (TYPE C-1 AND TYPE C-2), WHEN LOCATED ON SLOPES, SHALL BE INSTALLED ON THE UPHILL SIDE OF THE BASIN.

LEGEND:

P REMOTE CONTROL VALVE WITH PRESSURE REDUCING VALVE

ABBREVIATIONS:

FM - FLOW METER

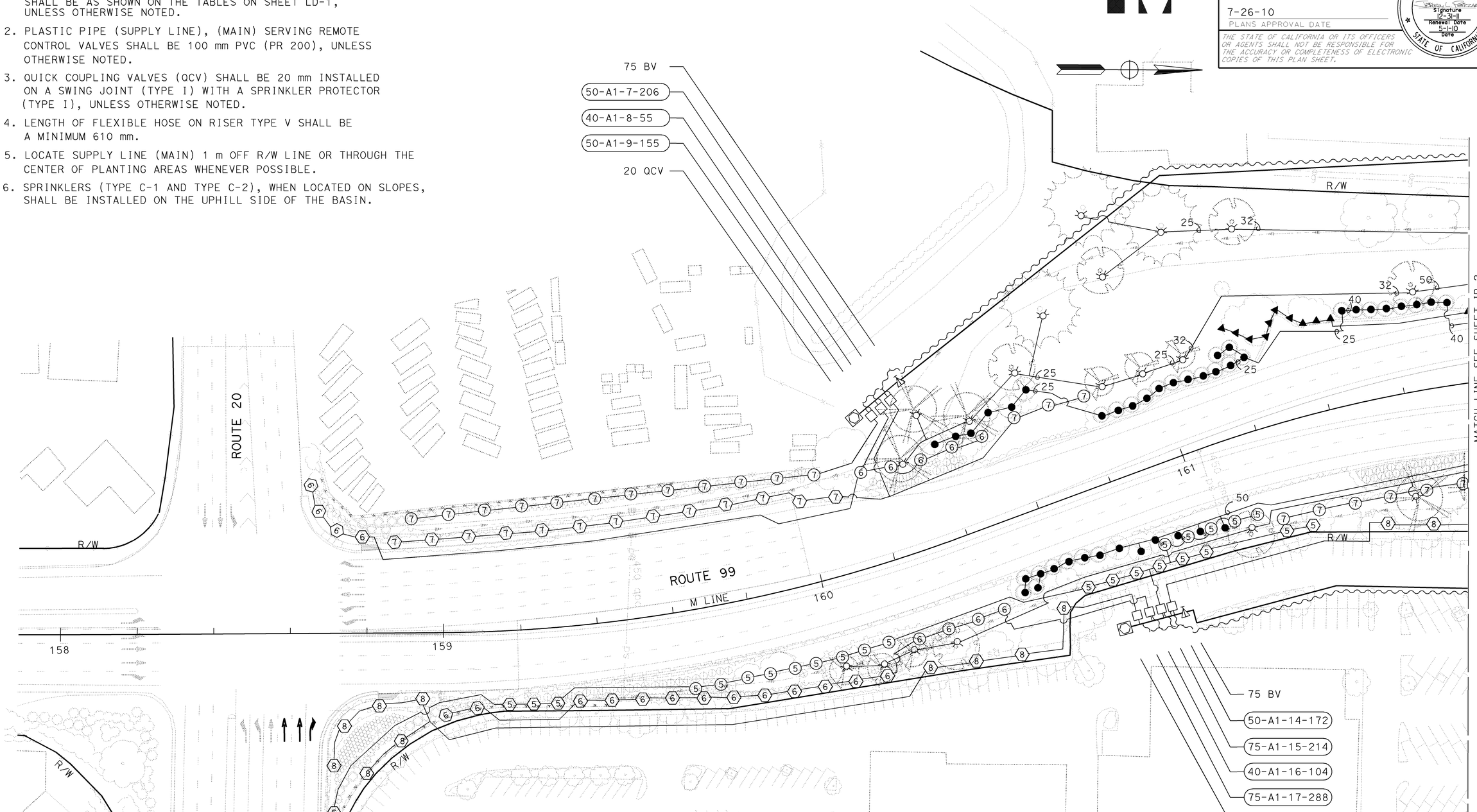

FOR COMPLETE R/W AND ACCURATE ACCESS DATA, SEE R/W RECORD MAPS AT DISTRICT OFFICE.

ALL IRRIGATION EQUIPMENT SIZES ARE SHOWN IN MILLIMETERS (DIAMETER NOMINAL) UNLESS OTHERWISE NOTED.

IRRIGATION PLAN

SCALE 1:500

IP-1

CALCULATED-DESIGNED BY	JEFFREY L. PIETRZAK	REVISED BY	JLP
CHECKED BY	T. CHRIS JOHNSON	DATE REVISED	7/1/10
SENIOR LANDSCAPE ARCHITECT	K. MURRAY		

STATE OF CALIFORNIA - DEPARTMENT OF TRANSPORTATION
Caltrans
LANDSCAPE

LAST REVISION 00-00-00
DATE PLOTTED => 02-AUG-2010
TIME PLOTTED => 15:29

Dist	COUNTY	ROUTE	KILOMETER POST TOTAL PROJECT	SHEET No.	TOTAL SHEETS
03	Sut	99	T49.2/R51.8	38	88

Caltrans Metric

LICENSED LANDSCAPE ARCHITECT 7-12-10

7-26-10
PLANS APPROVAL DATE

LICENSED LANDSCAPE ARCHITECT JEFFREY L. PIETRZAK No. 4457 Signature 12-31-11 Renewal Date 5-1-10 Date STATE OF CALIFORNIA

THE STATE OF CALIFORNIA OR ITS OFFICERS OR AGENTS SHALL NOT BE RESPONSIBLE FOR THE ACCURACY OR COMPLETENESS OF ELECTRONIC COPIES OF THIS PLAN SHEET.

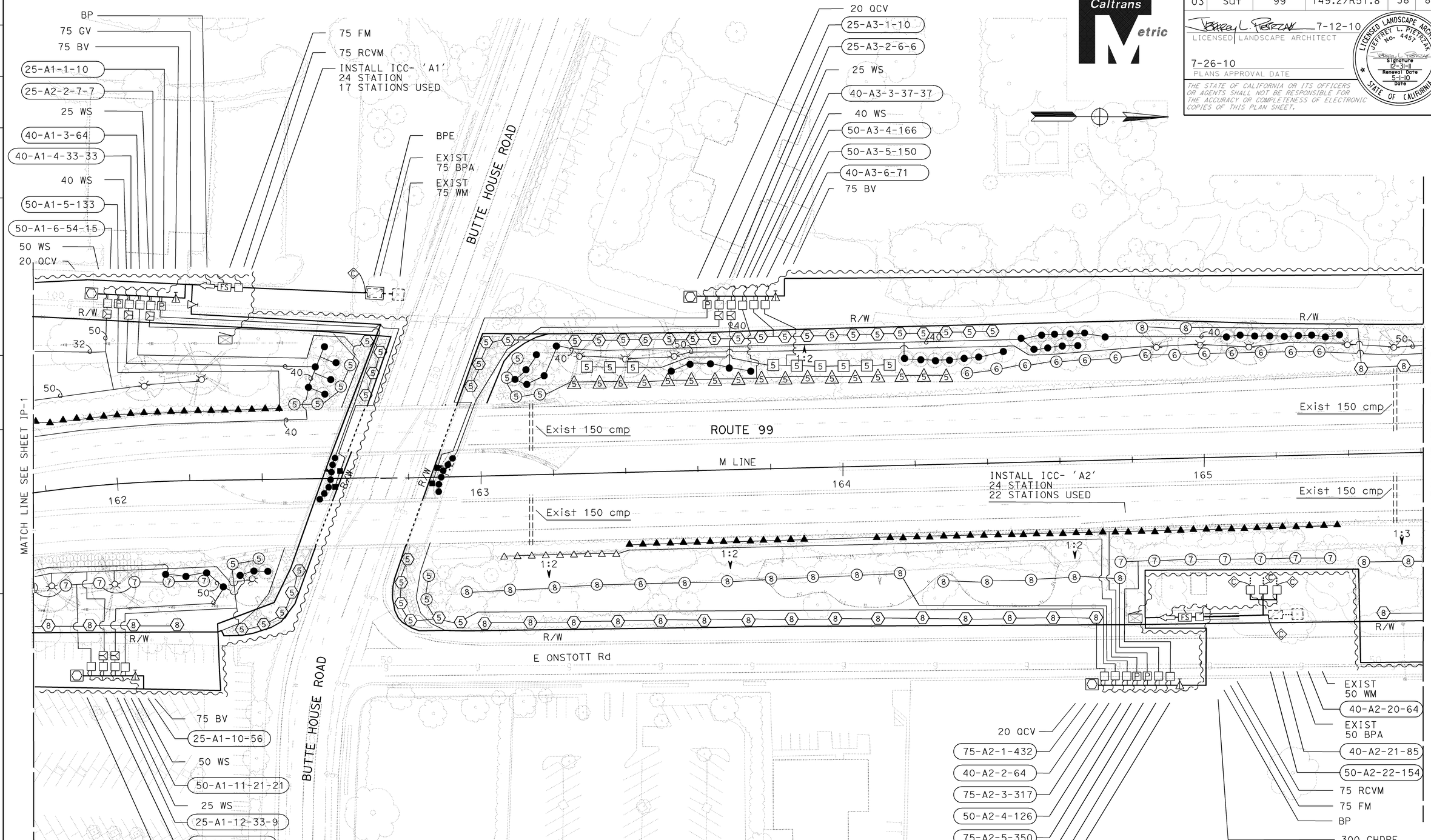

IRRIGATION PLAN

SCALE 1:500

IP-2

FOR COMPLETE R/W AND ACCURATE ACCESS DATA, SEE R/W RECORD MAPS AT DISTRICT OFFICE.

ALL IRRIGATION EQUIPMENT SIZES ARE SHOWN IN MILLIMETERS (DIAMETER NOMINAL) UNLESS OTHERWISE NOTED.

STATE OF CALIFORNIA - DEPARTMENT OF TRANSPORTATION
Caltrans
LANDSCAPE

SENIOR LANDSCAPE ARCHITECT: K. MURRAY
CALCULATED-DESIGNED BY: JEFFREY L. PIETRZAK
CHECKED BY: T. CHRIS JOHNSON
REVISED BY: JLP
DATE REVISED: 7/1/10

LAST REVISION 00-00-00
DATE PLOTTED => 02-AUG-2010
TIME PLOTTED => 15:29

Dist	COUNTY	ROUTE	KILOMETER POST TOTAL PROJECT	SHEET No.	TOTAL SHEETS
03	Sut	99	T49.2/R51.8	39	88

LICENSED LANDSCAPE ARCHITECT 7-12-10

7-26-10
PLANS APPROVAL DATE

THE STATE OF CALIFORNIA OR ITS OFFICERS OR AGENTS SHALL NOT BE RESPONSIBLE FOR THE ACCURACY OR COMPLETENESS OF ELECTRONIC COPIES OF THIS PLAN SHEET.

LICENSED LANDSCAPE ARCHITECT JEFFREY L. PIETRZAK No. 4457 Signature 12-31-11 Renewal Date 5-1-10 Date STATE OF CALIFORNIA

Caltrans Metric

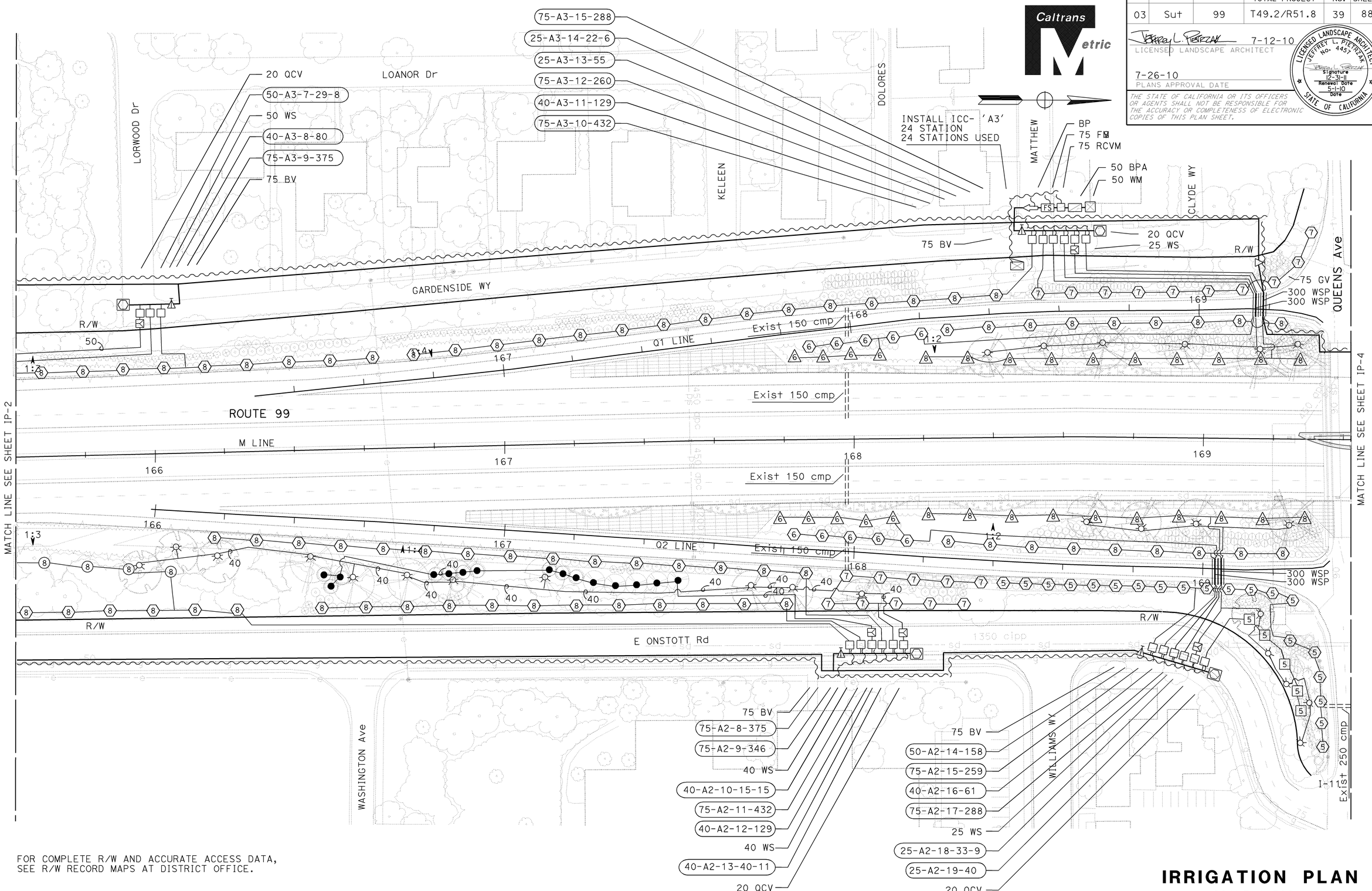

FOR COMPLETE R/W AND ACCURATE ACCESS DATA, SEE R/W RECORD MAPS AT DISTRICT OFFICE.

IRRIGATION PLAN

SCALE 1:500

IP-3

ALL IRRIGATION EQUIPMENT SIZES ARE SHOWN IN MILLIMETERS (DIAMETER NOMINAL) UNLESS OTHERWISE NOTED.

REVISED BY	JLP
DATE REVISED	7/1/10
CALCULATED-DESIGNED BY	JEFFREY L. PIETRZAK
CHECKED BY	T. CHRIS JOHNSON
SENIOR LANDSCAPE ARCHITECT	K. MURRAY

STATE OF CALIFORNIA - DEPARTMENT OF TRANSPORTATION
Caltrans
LANDSCAPE

LAST REVISION 00-00-00
DATE PLOTTED => 02-AUG-2010
TIME PLOTTED => 15:29

Dist	COUNTY	ROUTE	KILOMETER POST TOTAL PROJECT	SHEET No.	TOTAL SHEETS
03	Sut	99	T49.2/R51.8	40	88

Caltrans Metric

Jeffrey L. Pietrzak 7-12-10
LICENSED LANDSCAPE ARCHITECT

7-26-10
PLANS APPROVAL DATE

LICENSED LANDSCAPE ARCHITECT JEFFREY L. PIETRZAK No. 4457 Signature 12-31-11 Renewal Date 5-1-10 Date STATE OF CALIFORNIA

THE STATE OF CALIFORNIA OR ITS OFFICERS OR AGENTS SHALL NOT BE RESPONSIBLE FOR THE ACCURACY OR COMPLETENESS OF ELECTRONIC COPIES OF THIS PLAN SHEET.

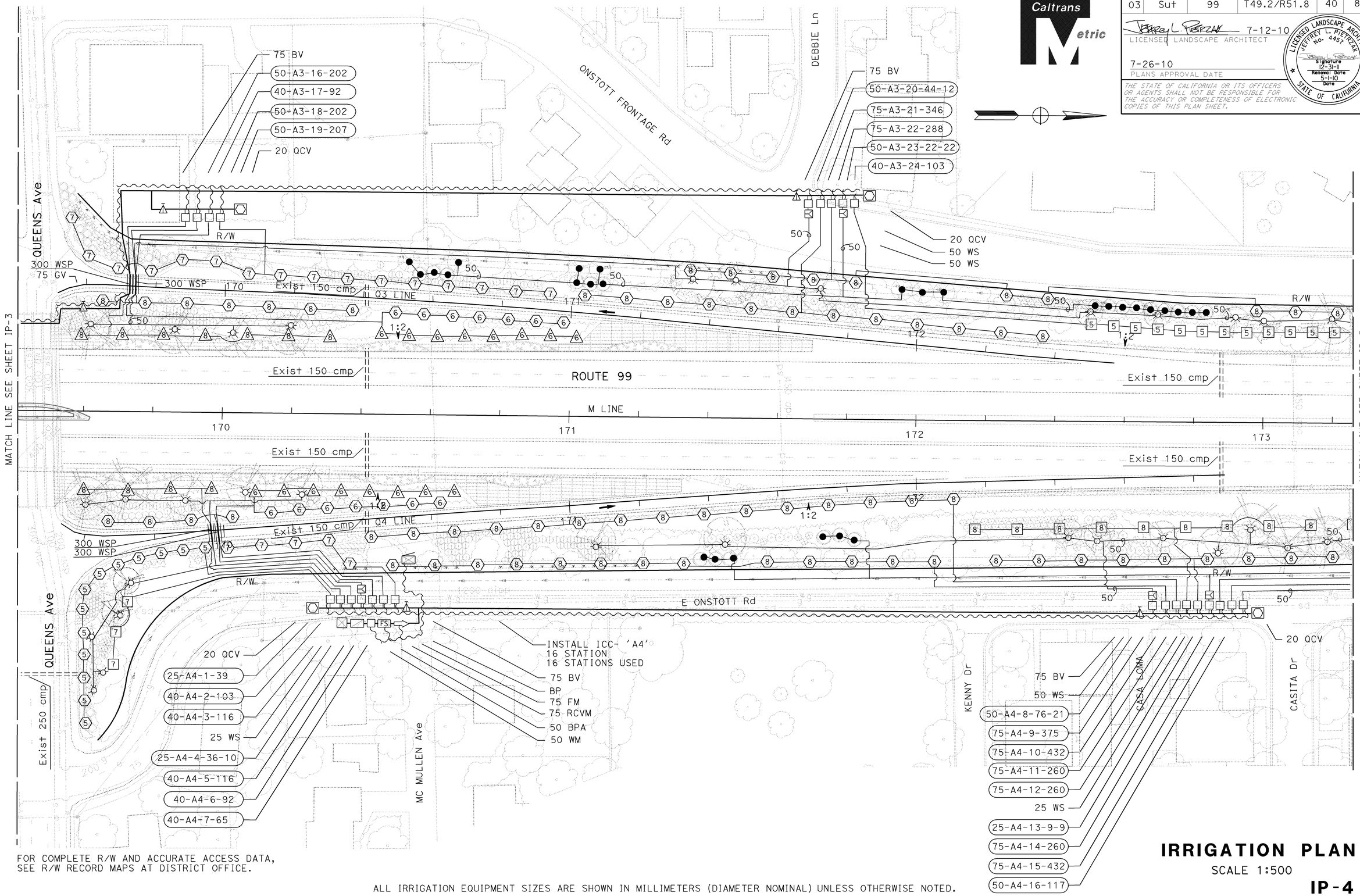

FOR COMPLETE R/W AND ACCURATE ACCESS DATA, SEE R/W RECORD MAPS AT DISTRICT OFFICE.

ALL IRRIGATION EQUIPMENT SIZES ARE SHOWN IN MILLIMETERS (DIAMETER NOMINAL) UNLESS OTHERWISE NOTED.

IRRIGATION PLAN

SCALE 1:500

IP-4

CALCULATED-DESIGNED BY	JEFFREY L. PIETRZAK
CHECKED BY	T. CHRIS JOHNSON
SENIOR LANDSCAPE ARCHITECT	K. MURRAY
REVISED BY	JLP
DATE REVISED	7/1/10

STATE OF CALIFORNIA - DEPARTMENT OF TRANSPORTATION
Caltrans
LANDSCAPE

LAST REVISION 00-00-00
DATE PLOTTED => 02-AUG-2010
TIME PLOTTED => 15:30

Dist	COUNTY	ROUTE	KILOMETER POST TOTAL PROJECT	SHEET No.	TOTAL SHEETS
03	Sut	99	T49.2/R51.8	41	88

Jeffrey L. Pietrzak 7-12-10
LICENSED LANDSCAPE ARCHITECT

7-26-10
PLANS APPROVAL DATE

LICENSED LANDSCAPE ARCHITECT JEFFREY L. PIETRZAK No. 4457 Signature 12-31-11 Renewal Date 5-1-10 Date STATE OF CALIFORNIA

THE STATE OF CALIFORNIA OR ITS OFFICERS OR AGENTS SHALL NOT BE RESPONSIBLE FOR THE ACCURACY OR COMPLETENESS OF ELECTRONIC COPIES OF THIS PLAN SHEET.

Caltrans Metric

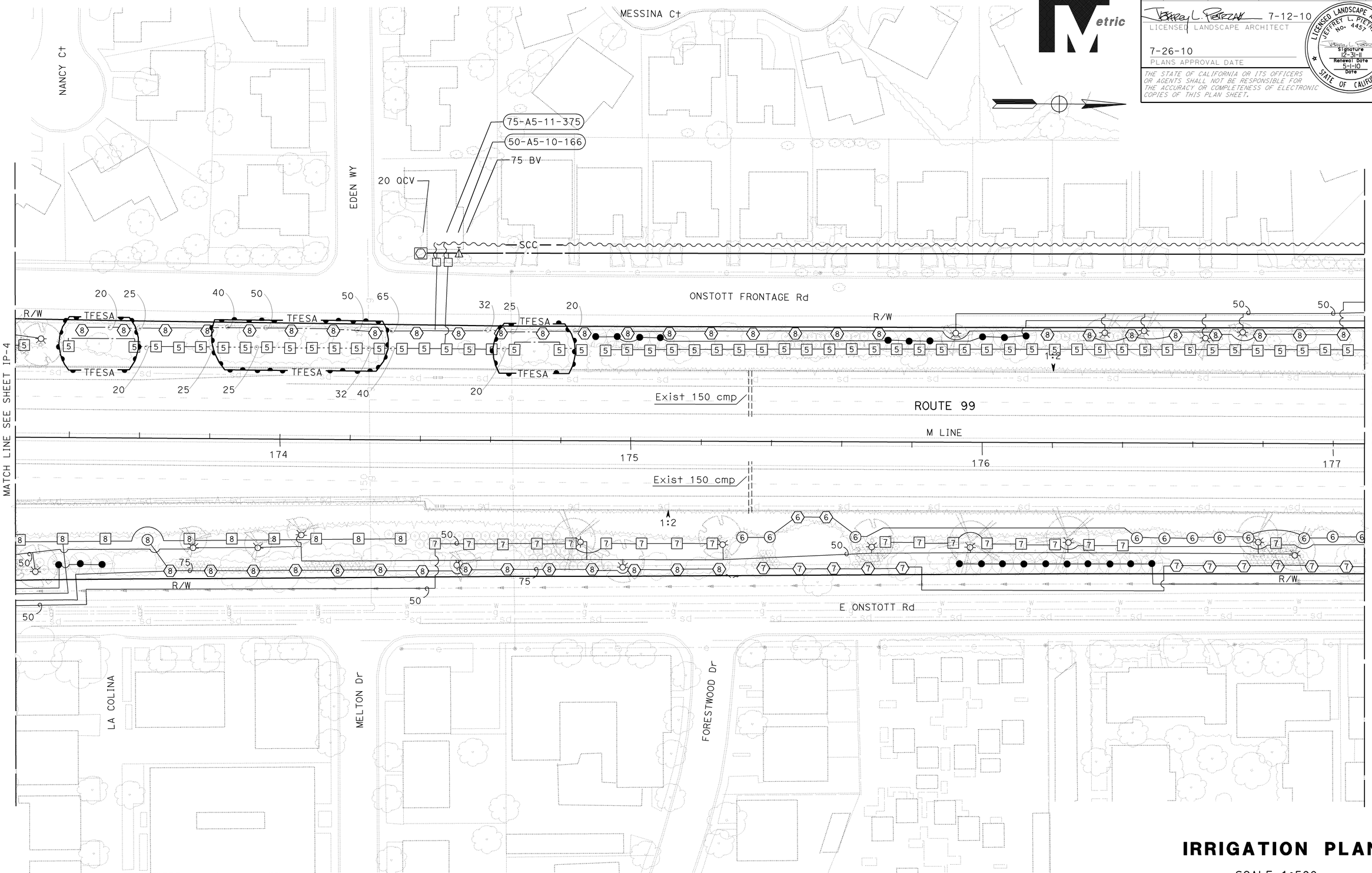

IRRIGATION PLAN

SCALE 1:500

IP-5

FOR COMPLETE R/W AND ACCURATE ACCESS DATA, SEE R/W RECORD MAPS AT DISTRICT OFFICE.

ALL IRRIGATION EQUIPMENT SIZES ARE SHOWN IN MILLIMETERS (DIAMETER NOMINAL) UNLESS OTHERWISE NOTED.

STATE OF CALIFORNIA - DEPARTMENT OF TRANSPORTATION
Caltrans
LANDSCAPE

SENIOR LANDSCAPE ARCHITECT: K. MURRAY
CALCULATED-DESIGNED BY: JEFFREY L. PIETRZAK
CHECKED BY: T. CHRIS JOHNSON
REVISED BY: JLP
DATE REVISED: 7/1/10

LAST REVISION 00-00-00
DATE PLOTTED => 02-AUG-2010
TIME PLOTTED => 15:30

Dist	COUNTY	ROUTE	KILOMETER POST TOTAL PROJECT	SHEET No.	TOTAL SHEETS
03	Sut	99	T49.2/R51.8	42	88

Jeffrey L. Pietrzak 7-12-10
LICENSED LANDSCAPE ARCHITECT

7-26-10
PLANS APPROVAL DATE

LICENSED LANDSCAPE ARCHITECT JEFFREY L. PIETRZAK No. 4457 Signature 12-31-11 Renewal Date 5-1-10 Date STATE OF CALIFORNIA

THE STATE OF CALIFORNIA OR ITS OFFICERS OR AGENTS SHALL NOT BE RESPONSIBLE FOR THE ACCURACY OR COMPLETENESS OF ELECTRONIC COPIES OF THIS PLAN SHEET.

Caltrans Metric

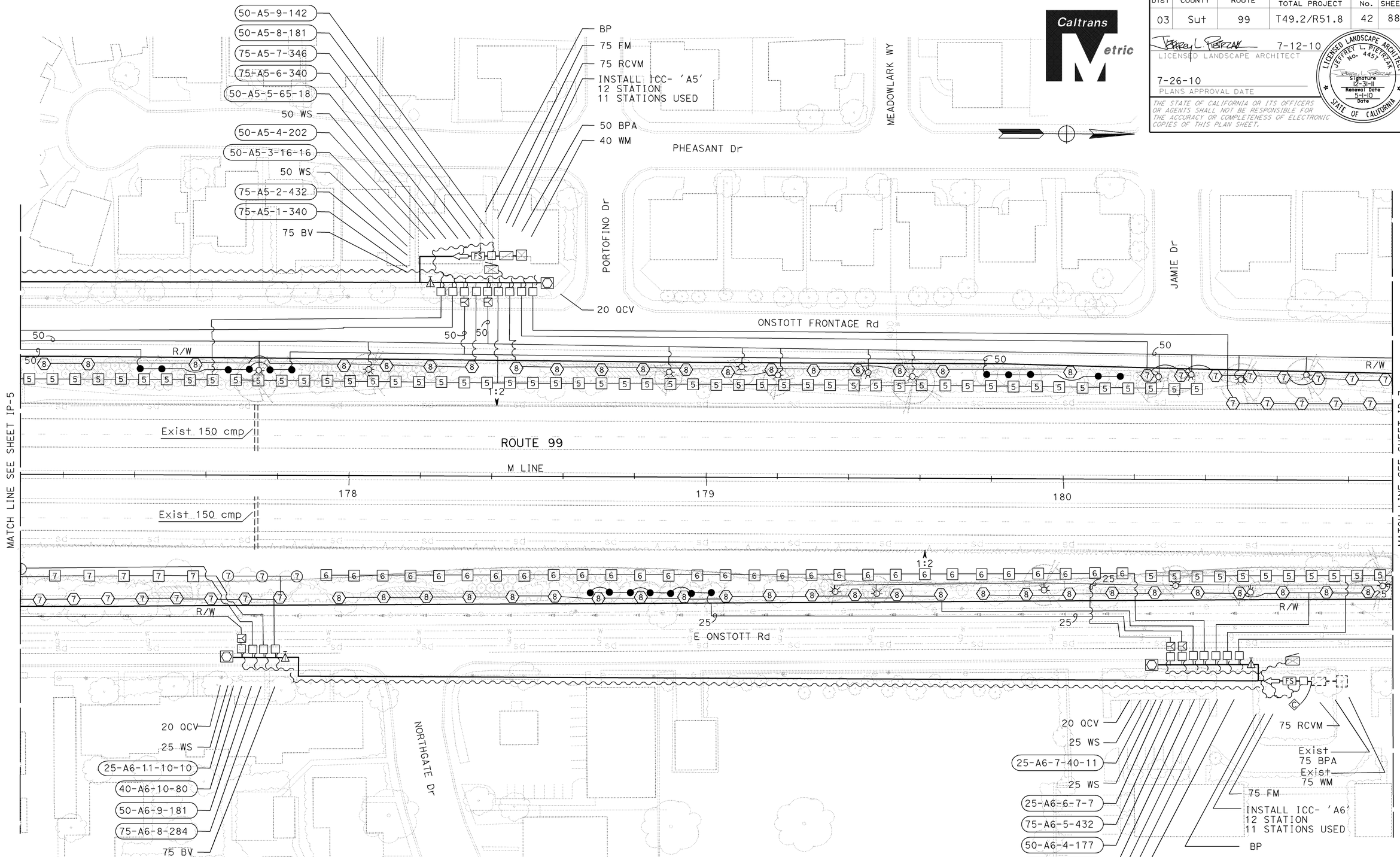

FOR COMPLETE R/W AND ACCURATE ACCESS DATA, SEE R/W RECORD MAPS AT DISTRICT OFFICE.

ALL IRRIGATION EQUIPMENT SIZES ARE SHOWN IN MILLIMETERS (DIAMETER NOMINAL) UNLESS OTHERWISE NOTED.

IRRIGATION PLAN

SCALE 1:500

IP-6

STATE OF CALIFORNIA - DEPARTMENT OF TRANSPORTATION
Caltrans
LANDSCAPE

SENIOR LANDSCAPE ARCHITECT: K. MURRAY
CALCULATED-DESIGNED BY: JEFFREY L. PIETRZAK
CHECKED BY: T. CHRIS JOHNSON
REVISED BY: JLP
DATE REVISED: 7/1/10

LAST REVISION DATE PLOTTED => 02-AUG-2010
00-00-00 TIME PLOTTED => 5:30

BORDER LAST REVISED 3/1/2007
RELATIVE BORDER SCALE IS IN MILLIMETERS 0 20 40 60 80
USERNAME => s128033
DGN FILE => 31f500t1006.dgn
CU 03340
EA 1F5001

Dist	COUNTY	ROUTE	KILOMETER POST TOTAL PROJECT	SHEET No.	TOTAL SHEETS
03	Sut	99	T49.2/R51.8	43	88

Caltrans Metric

Jeffrey L. Pietrzak 7-12-10
LICENSED LANDSCAPE ARCHITECT

7-26-10
PLANS APPROVAL DATE

LICENSED LANDSCAPE ARCHITECT JEFFREY L. PIETRZAK No. 4457 Signature 12-31-11 Renewal Date 5-1-10 Date STATE OF CALIFORNIA

THE STATE OF CALIFORNIA OR ITS OFFICERS OR AGENTS SHALL NOT BE RESPONSIBLE FOR THE ACCURACY OR COMPLETENESS OF ELECTRONIC COPIES OF THIS PLAN SHEET.

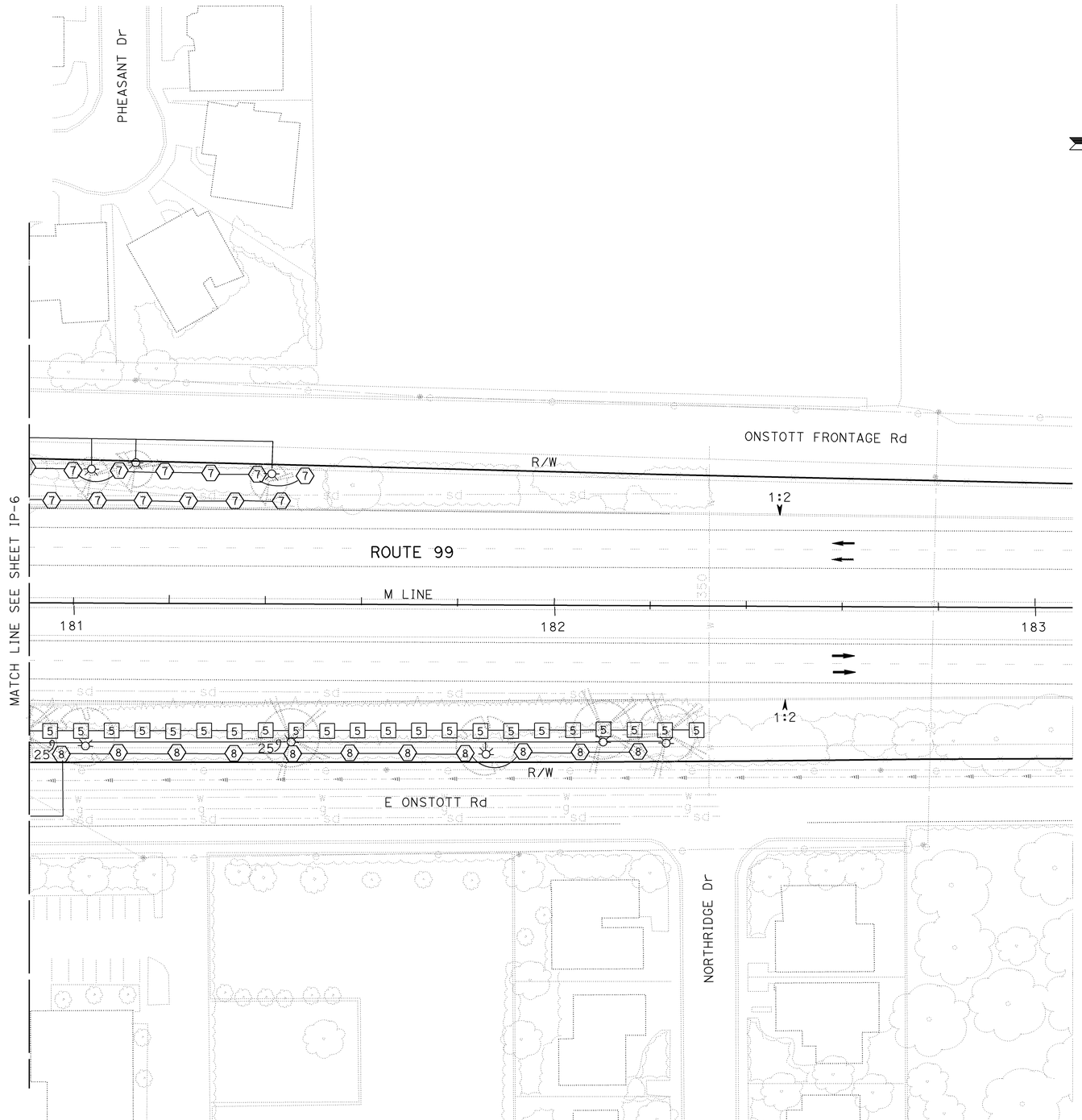

FOR COMPLETE R/W AND ACCURATE ACCESS DATA, SEE R/W RECORD MAPS AT DISTRICT OFFICE.

ALL IRRIGATION EQUIPMENT SIZES ARE SHOWN IN MILLIMETERS (DIAMETER NOMINAL) UNLESS OTHERWISE NOTED.

IRRIGATION PLAN

SCALE 1:500

IP-7

STATE OF CALIFORNIA - DEPARTMENT OF TRANSPORTATION	SENIOR LANDSCAPE ARCHITECT	CALCULATED-DESIGNED BY	JEFFREY L. PIETRZAK
Caltrans	K. MURRAY	CHECKED BY	T. CHRIS JOHNSON
LANDSCAPE		REVISED BY	JLP
		DATE REVISED	7/1/10

LAST REVISION 00-00-00 DATE PLOTTED => 02-AUG-2010 TIME PLOTTED => 15:30

Dist	COUNTY	ROUTE	KILOMETER POST TOTAL PROJECT	SHEET No.	TOTAL SHEETS
03	Sut	99	T49.2/R51.8	44	88

Caltrans Metric

LICENSED LANDSCAPE ARCHITECT 7-12-10

7-26-10
PLANS APPROVAL DATE

LICENSED LANDSCAPE ARCHITECT JEFFREY L. PIETRZAK No. 4457 Signature 12-31-11 Renewal Date 5-1-10 Date STATE OF CALIFORNIA

THE STATE OF CALIFORNIA OR ITS OFFICERS OR AGENTS SHALL NOT BE RESPONSIBLE FOR THE ACCURACY OR COMPLETENESS OF ELECTRONIC COPIES OF THIS PLAN SHEET.

SPRINKLER SCHEDULE

SYMBOL	TYPE	DESCRIPTION	SPRAY PATTERN	OPERATING PRESSURE (KILOPASCAL) (kPa)	PRESSURE COMPENSATING	PLUS / MINUS 5% ② DISCHARGE: LITERS PER SECOND L/s	LITERS PER MINUTE L/min	LITERS PER HOUR L/h	RADIUS (IN METERS)(m)	WIDTH x LENGTH (IN METERS)(m)	MATERIAL	NOZZLE SIZE IN MILLIMETERS (mm)	INLET CONNECTION (NPT) (DN IN MILLIMETERS)(mm)	POSITIVE-LOCKING ADJ ARC STOP	BACKSPLASH PREVENTER	DIFFUSER PIN	DISTANCE CONTROL FLAP	ADJ DISCHARGE	RISER: TYPE	RISER MATERIAL: PLASTIC	RISER MATERIAL: GALVANIZED	RISER: SIZE (IPS) (IN MILLIMETERS)(mm)	RISER: HEIGHT (IN MILLIMETERS)(mm)	RISER: FLOW SHUTOFF DEVICE	⑤ SWING JOINT (TYPE)	RISER SUPPORT	SPRINKLER PROTECTOR (TYPE)	REMARKS
8	A-8	GEAR DRIVEN	F	413	-	-	28.8	-	13.7	-	PL	-	20	-	-	-	-	X	II	-	X	20	610	-	III	X	-	
8	A-8	GEAR DRIVEN	H	413	-	-	28.8	-	13.7	-	PL	-	20	-	-	-	-	X	II	-	X	20	610	-	III	X	-	
△8	A-8	GEAR DRIVEN	H	413	-	-	28.8	-	13.7	-	PL	-	20	-	-	-	-	X	IV	-	X	20	75	-	III	-	-	
◇8	A-8	GEAR DRIVEN	H	413	-	-	28.8	-	13.7	-	PL	-	20	-	-	-	-	X	VI	-	-	20	-	-	-	-	I	300 mm POP-UP
7	A-7	GEAR DRIVEN	F	344	-	-	12.9	-	12.2	-	PL	-	20	-	-	-	-	X	II	-	X	20	610	-	III	X	-	
7	A-7	GEAR DRIVEN	H	344	-	-	12.9	-	12.2	-	PL	-	20	-	-	-	-	X	II	-	X	20	610	-	III	X	-	
◇7	A-7	GEAR DRIVEN	H	344	-	-	12.9	-	12.2	-	PL	-	20	-	-	-	-	X	VI	-	-	20	-	-	-	-	I	300 mm POP-UP
6	A-6	GEAR DRIVEN	F	344	-	-	6.1	-	10.4	-	PL	-	20	-	-	-	-	X	II	-	X	20	610	-	III	X	-	
6	A-6	GEAR DRIVEN	H	344	-	-	6.1	-	10.4	-	PL	-	20	-	-	-	-	X	II	-	X	20	610	-	III	X	-	
△6	A-6	GEAR DRIVEN	H	344	-	-	6.1	-	10.4	-	PL	-	20	-	-	-	-	X	IV	-	X	20	75	-	III	-	-	
◇6	A-6	GEAR DRIVEN	H	344	-	-	6.1	-	10.4	-	PL	-	20	-	-	-	-	X	VI	-	-	20	-	-	-	-	I	300 mm POP-UP
5	A-5	GEAR DRIVEN	F	344	-	-	7.9	-	8.5	-	PL	-	20	-	-	-	-	X	II	-	X	20	610	-	III	X	-	
5	A-5	GEAR DRIVEN	H	344	-	-	7.9	-	8.5	-	PL	-	20	-	-	-	-	X	II	-	X	20	610	-	III	X	-	
△5	A-5	GEAR DRIVEN	H	344	-	-	7.9	-	8.5	-	PL	-	20	-	-	-	-	X	IV	-	X	20	75	-	III	-	-	
◇5	A-5	GEAR DRIVEN	H	344	-	-	7.9	-	8.5	-	PL	-	20	-	-	-	-	X	VI	-	-	20	-	-	-	-	I	300 mm POP-UP
■	B-4	STRIP SPRAY	SST	206	X	-	4.9	-	-	1.5 x 9.1	PL	-	15	-	-	-	-	X	VI	-	-	15	-	-	-	-	I	300 mm POP-UP
▲	B-2	SHRUB SPRAY	H/Q	206	X	-	7.0/3.5	-	4.6	-	PL	-	15	-	-	-	-	X	VI	-	-	15	-	-	-	-	I	300 mm POP-UP
△	B-1	SHRUB SPRAY	F	206	X	-	14.0	-	4.6	-	PL	-	15	-	-	-	-	X	IV	-	X	15	75	-	III	-	-	
●	C-2	FLOOD BUBBLER	-	172	-	-	1.0	-	-	-	PL	-	15	-	-	-	-	-	V	-	-	15	-	-	-	-	-	
☼	C-1	STREAM BUBBLER	H	200	-	-	3.6	-	1.5	-	PL	-	15	-	-	-	-	-	VI	-	-	15	100	-	III	-	-	

X IN BOX DENOTES REQUIREMENT

APPLICABLE WHEN CIRCLED BELOW:

1 - See Special Provisions.
② - If a pressure compensating device is specified, the discharge and radii shown reflect its use.
3 - Arc Stop shall be fitted with a nut and bolt.
4 - Vinyl-coated cast iron housing.
⑤ - Swing Joints required adjacent to shoulders, curbs, sidewalks, and dikes.
6 - Unless otherwise shown on plans.

ABBREVIATIONS

ADJ — adjustable
B/B — brass/bronze
B/B/PL — brass/bronze/plastic
B/PL — brass/plastic
CST — center strip
DN — diameter nominal
EST — end strip
F — full circle
F/P — full/part circle
H — half circle
IPS — iron pipe size
kPa — kilopascal
L/h — liters per hour
L/min — liters per minute
L/s — liters per second
m — meters
mm — millimeters
NPT — national pipe thread
P — part circle
PL — plastic
Q — quarter circle
SST — side strip
T — third circle
TQ — three quarter circle
TT — two thirds circle

PLASTIC PIPE SUPPLY LINE (LATERAL) FOR SPRINKLERS:

TYPE A-8			TYPE A-7		
NO.HEADS	L/min	SIZE	NO.HEADS	L/min	SIZE
1	29	20 mm	1-2	13-26	20 mm
2	30-58	25 mm	3-4	27-52	25 mm
3	59-86	32 mm	5-7	53-90	32 mm
4	87-115	40 mm	8-10	91-129	40 mm
5-7	116-202	50 mm	11-16	130-206	50 mm
8-10	203-288	65 mm	17-23	207-297	65 mm
11-15	289-432	75 mm	24-35	298-452	75 mm

TYPE A-6			TYPE A-5		
NO.HEADS	L/min	SIZE	NO.HEADS	L/min	SIZE
1-6	6-37	20 mm	1-4	8-32	20 mm
7-9	38-55	25 mm	5-7	33-55	25 mm
10-16	56-98	32 mm	8-12	56-95	32 mm
17-21	99-128	40 mm	13-16	96-126	40 mm
22-34	129-207	50 mm	17-26	127-205	50 mm
35-49	208-299	65 mm	27-38	206-300	65 mm
50-74	300-451	75 mm	39-57	301-450	75 mm

TYPE B-1			TYPE B-2		
NO.HEADS	L/min	SIZE	NO.HEADS	L/min	SIZE
1-2	14-28	20 mm	1-5	7-35	20 mm
3-4	29-56	25 mm	6-8	36-56	25 mm
5-7	57-98	32 mm	9-14	57-98	32 mm
8-9	99-126	40 mm	15-18	99-126	40 mm
10-14	127-196	50 mm	19-29	127-203	50 mm
15-21	197-294	65 mm	30-43	204-301	65 mm
22-32	295-448	75 mm	44-64	302-448	75 mm

TYPE B-4			TYPE C-1			TYPE C-2		
NO.HEADS	L/min	SIZE	NO.HEADS	L/min	SIZE	NO.HEADS	L/min	SIZE
1-7	5-34	20 mm	1-10	4-36	20 mm	1-38	1-38	20 mm
8-12	35-59	25 mm	11-16	37-58	25 mm	39-60	39-60	25 mm
13-20	60-98	32 mm	17-27	59-97	32 mm	61-98	61-98	32 mm
21-26	99-127	40 mm	28-36	98-130	40 mm	99-132	99-132	40 mm
27-42	128-206	50 mm	37-57	131-205	50 mm	133-208	133-208	50 mm
43-61	207-299	65 mm	58-83	206-299	65 mm	209-302	209-302	65 mm
62-92	300-451	75 mm	84-126	300-454	75 mm	303-454	303-454	75 mm

LANDSCAPE DETAILS
LD-1

REVISED BY	JLP
DATE REVISED	7/1/10
CALCULATED-DESIGNED BY	JEFFREY L. PIETRZAK
CHECKED BY	T. CHRIS JOHNSON
SENIOR LANDSCAPE ARCHITECT	K. MURRAY

STATE OF CALIFORNIA - DEPARTMENT OF TRANSPORTATION
Caltrans
LANDSCAPE

LAST REVISION 00-00-00
DATE PLOTTED => 02-AUG-2010
TIME PLOTTED => 15:30

Dist	COUNTY	ROUTE	KILOMETER POST TOTAL PROJECT	SHEET No.	TOTAL SHEETS
03	Sut	99	T49.2/R51.8	45	88

Caltrans Metric

Jeffrey L. Pietrzak 7-12-10
LICENSED LANDSCAPE ARCHITECT

7-26-10
PLANS APPROVAL DATE

LICENSED LANDSCAPE ARCHITECT JEFFREY L. PIETRZAK No. 4457 Signature 12-31-11 Renewal Date 5-1-10 Date STATE OF CALIFORNIA

THE STATE OF CALIFORNIA OR ITS OFFICERS OR AGENTS SHALL NOT BE RESPONSIBLE FOR THE ACCURACY OR COMPLETENESS OF ELECTRONIC COPIES OF THIS PLAN SHEET.

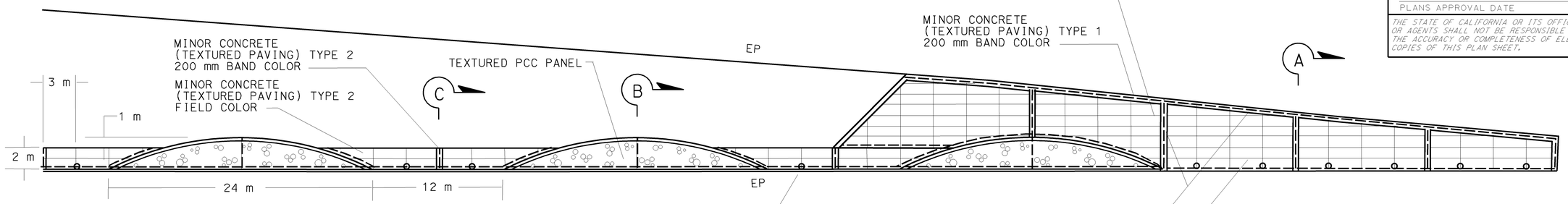

TEXTURED PCC PANEL AND MINOR CONCRETE (TEXTURED PAVING) LAYOUT

PLAN

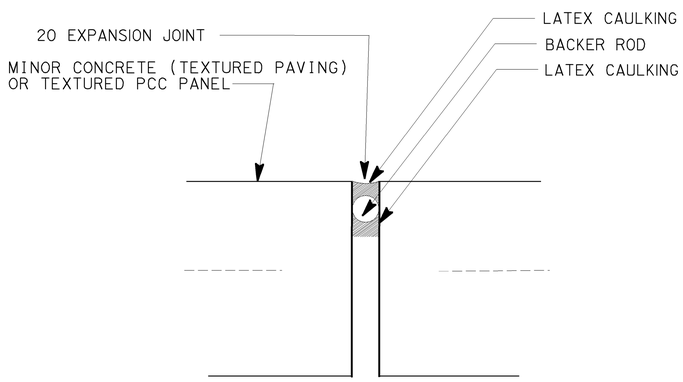

DETAIL "A"

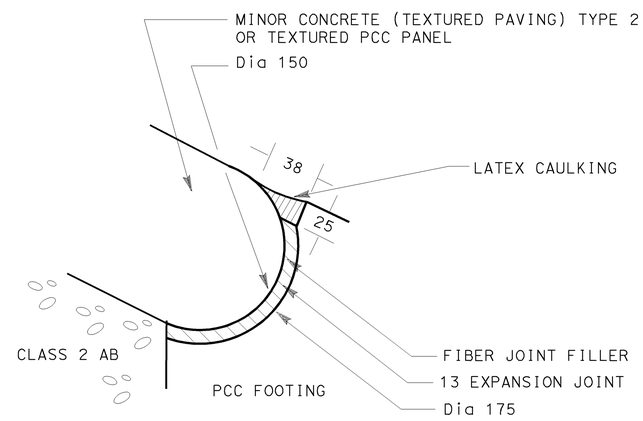

DETAIL "B"

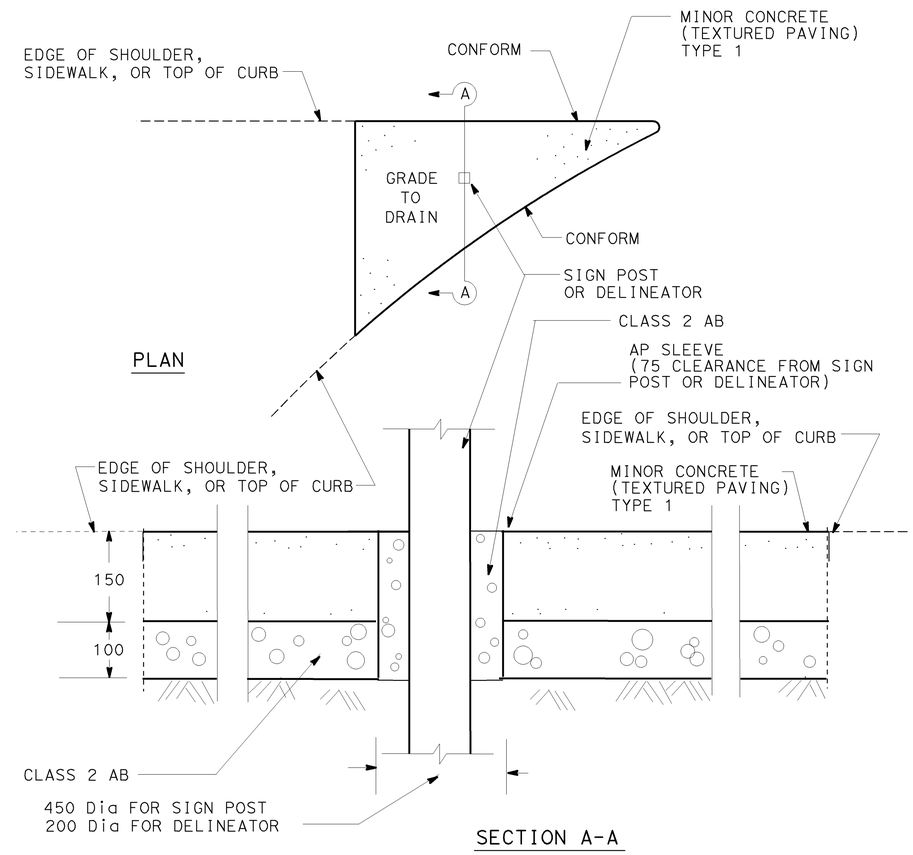

MINOR CONCRETE (TEXTURED PAVING) TYPE 1 @ SIGN POST OR DELINIATOR LOCATIONS

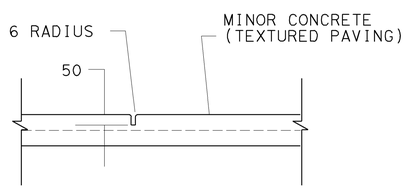

CONTROL JOINT

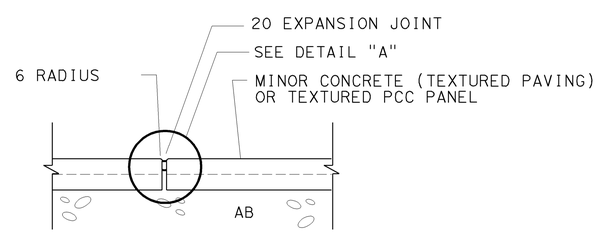

EXPANSION JOINT

ALL DIMENSIONS ARE IN MILLIMETERS UNLESS OTHERWISE SHOWN

LANDSCAPE DETAILS

NO SCALE

LD-2

JLP	JEFFREY L. PIETRZAK	K. MURRAY
REVISED BY	T. CHRIS JOHNSON	
DATE REVISED 7/1/10	CALCULATED-DESIGNED BY	SENIOR LANDSCAPE ARCHITECT
	CHECKED BY	

STATE OF CALIFORNIA - DEPARTMENT OF TRANSPORTATION
Caltrans
LANDSCAPE

LAST REVISION 00-00-00 | DATE PLOTTED => 02-AUG-2010 | TIME PLOTTED => 15:30

Dist	COUNTY	ROUTE	KILOMETER POST TOTAL PROJECT	SHEET No.	TOTAL SHEETS
03	Sut	99	T49.2/R51.8	46	88

Caltrans Metric

Jeffrey L. Pietrzak 7-12-10
LICENSED LANDSCAPE ARCHITECT

7-26-10
PLANS APPROVAL DATE

LICENSED LANDSCAPE ARCHITECT JEFFREY L. PIETRZAK No. 4457 Signature 12-31-11 Renewal Date 5-1-10 Date STATE OF CALIFORNIA

THE STATE OF CALIFORNIA OR ITS OFFICERS OR AGENTS SHALL NOT BE RESPONSIBLE FOR THE ACCURACY OR COMPLETENESS OF ELECTRONIC COPIES OF THIS PLAN SHEET.

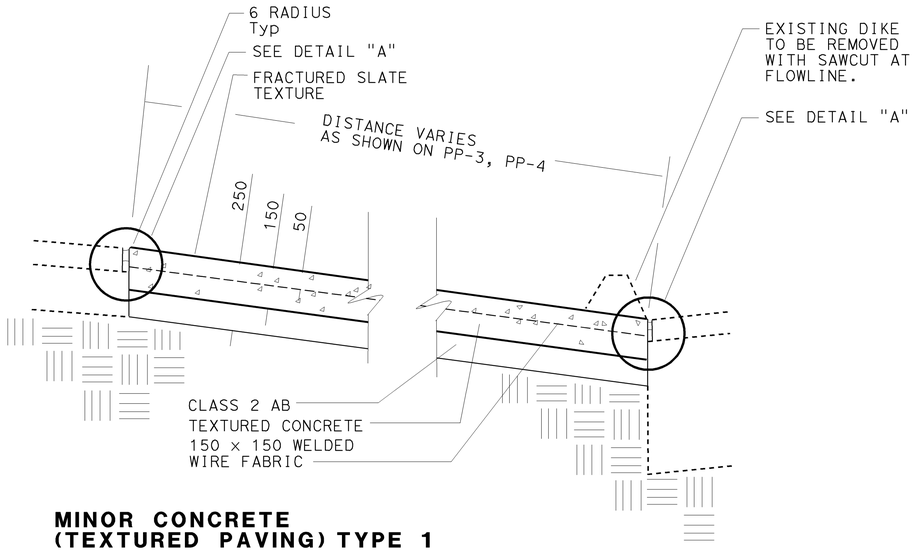

MINOR CONCRETE (TEXTURED PAVING) TYPE 1

SECTION A-A

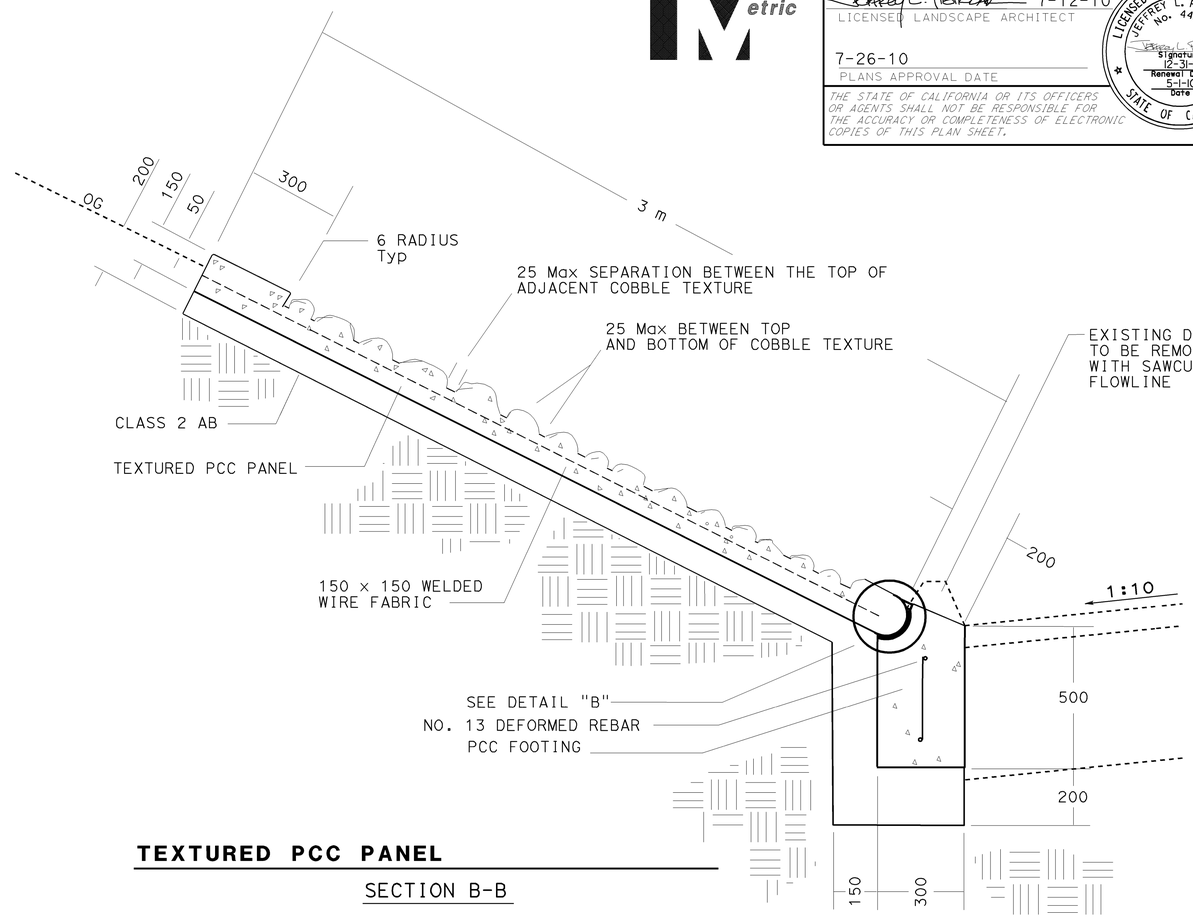

TEXTURED PCC PANEL

SECTION B-B

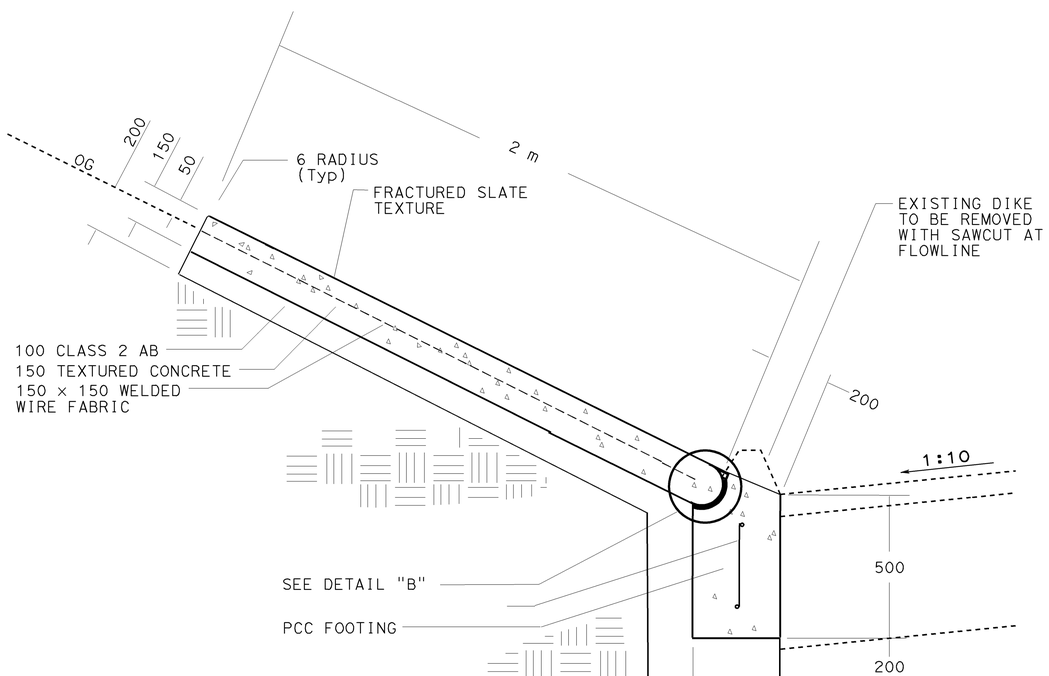

MINOR CONCRETE (TEXTURED PAVING) TYPE 2

SECTION C-C

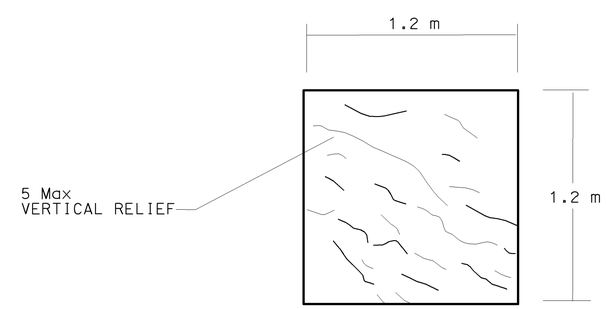

FRACTURED SLATE TEXTURE FORMING TOOL
MINOR CONCRETE (TEXTURED PAVING) TYPE 1, TYPE 2

PLAN

ALL DIMENSIONS ARE IN MILLIMETERS UNLESS OTHERWISE SHOWN

LANDSCAPE DETAILS

NO SCALE

LD-3

CALCULATED-DESIGNED BY	JEFFREY L. PIETRZAK	REVISED BY	JLP
CHECKED BY	T. CHRIS JOHNSON	DATE REVISED	7/1/10
SENIOR LANDSCAPE ARCHITECT	K. MURRAY		

STATE OF CALIFORNIA - DEPARTMENT OF TRANSPORTATION
Caltrans
LANDSCAPE

LAST REVISION 00-00-00 | DATE PLOTTED => 02-AUG-2010 | TIME PLOTTED => 15:30

Dist	COUNTY	ROUTE	KILOMETER POST TOTAL PROJECT	SHEET No.	TOTAL SHEETS
03	Sut	99	T49.2/R51.8	47	88

Caltrans Metric

Jeffrey L. Pietrzak 7-12-10
LICENSED LANDSCAPE ARCHITECT

7-26-10
PLANS APPROVAL DATE

LICENSED LANDSCAPE ARCHITECT JEFFREY L. PIETRZAK No. 4457 Signature 12-31-11 Renewal Date 5-1-10 Date STATE OF CALIFORNIA

THE STATE OF CALIFORNIA OR ITS OFFICERS OR AGENTS SHALL NOT BE RESPONSIBLE FOR THE ACCURACY OR COMPLETENESS OF ELECTRONIC COPIES OF THIS PLAN SHEET.

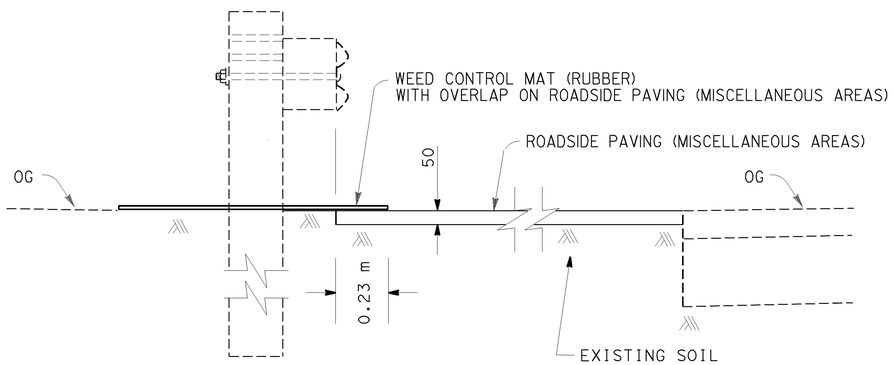

WEED CONTROL MAT (RUBBER)
@ ROADSIDE PAVING (MISCELLANEOUS AREAS) UNDER GUARD RAILING

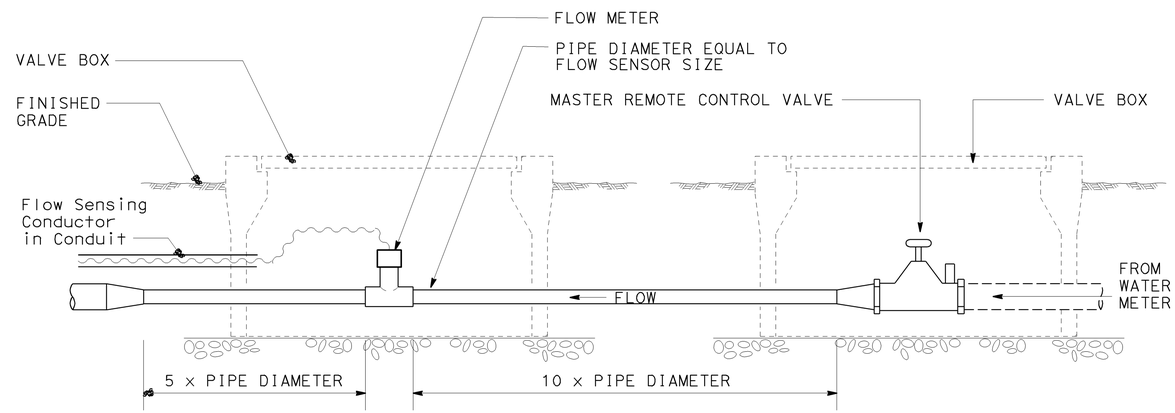

ELEVATION

FLOW METER

ALL DIMENSIONS ARE IN
MILLIMETERS UNLESS OTHERWISE SHOWN

LANDSCAPE DETAILS

NO SCALE

LD-4

STATE OF CALIFORNIA - DEPARTMENT OF TRANSPORTATION
Caltrans
LANDSCAPE

SENIOR LANDSCAPE ARCHITECT: K. MURRAY
CALCULATED-DESIGNED BY: JEFFREY L. PIETRZAK
CHECKED BY: T. CHRIS JOHNSON
REVISED BY: JLP
DATE REVISED: 7/1/10

LAST REVISION 00-00-00
DATE PLOTTED => 02-AUG-2010
TIME PLOTTED => 15:30

Dist	COUNTY	ROUTE	KILOMETER POST TOTAL PROJECT	SHEET No.	TOTAL SHEETS
03	Sut	99	T49.2/R51.8	48	88

Caltrans Metric

Jeffrey L. Pietrzak 7-12-10
LICENSED LANDSCAPE ARCHITECT

7-26-10
PLANS APPROVAL DATE

LICENSED LANDSCAPE ARCHITECT JEFFREY L. PIETRZAK No. 4457 Signature 12-31-11 Renewal Date 5-1-10 Date STATE OF CALIFORNIA

THE STATE OF CALIFORNIA OR ITS OFFICERS OR AGENTS SHALL NOT BE RESPONSIBLE FOR THE ACCURACY OR COMPLETENESS OF ELECTRONIC COPIES OF THIS PLAN SHEET.

A

AB	aggregate base
ABS	acrylonitrile-butadiene-styrene
AC	asphalt concrete
Adj	adjacent/adjustable
AIC	auxiliary irrigation controller
Alt	alternative
AMEND	amendment
ARV	air release valve
AUTO	automatic
AUX	auxiliary
AVB	atmospheric vacuum breaker

B

B&B	balled and burlapped
B/B	brass/bronze
B/B/PL	brass/bronze/plastic
B/PL	brass/plastic
BFM	bonded fiber matrix
Bit Ctd	bituminous coated
BP	booster pump
BPA	backflow preventer assembly
BPAE	backflow preventer assembly in enclosure
BPE	backflow preventer enclosure
BV	ball valve

C

CAP	corrugated aluminum pipe
CARV	combination air release valve
CCA	cam coupler assembly
CEC	controller enclosure cabinet
CHDPE	corrugated high density polyethylene
CL	chain link
CNC	control and neutral conductors
Conc	concrete
Cond	conduit
CSP	corrugated steel pipe
CST	center strip
CV	check valve

D

Dia	diameter
DIP	ductile iron pipe
DN	diameter nominal

E

EA	each
ELEC	electric/electrical
Elev	elevation
ENCL	enclosure
EP	edge of pavement
ES	edge of shoulder
EST	end strip
ESTB	establishment
ETW	edge of traveled way

F

F	full circle
F/P	full/part circle
FAU	filter assembly unit
FCV	flow control valve
FERT	fertilizer
FG	finished grade
FIPT	female iron pipe thread
FIS	fertilizer injector system
FL	flow line
FM	flow monitor
FS	flow sensor
FV	flush valve

G

Galv	galvanized
GARV	garden valve
GSP	galvanized steel pipe
GV	gate valve

H

H	half circle
HB	hose bib
HDPE	high density polyethylene
HP	horsepower/hinge point
HPL	high pressure line
Hwy	highway

I

IC	irrigation controller
ICC	irrigation controller(s) in controller enclosure cabinet
ID	inside diameter
IFS	irrigation filtration system
IPS	iron pipe size
IPT	iron pipe thread
Irr	irrigation

K

KP	kilometer post

L

L	length
L/h	liters per hour
L/min	liters per minute
L/s	liters per second

M

Max	maximum
MBGR	metal beam guard railing
MCV	manual control valve
MIC	master irrigation controller
Min	minimum
MIPT	male iron pipe thread
Misc	miscellaneous
Mtl	material
MVP	maintenance vehicle pullout

N

NCN	no common name
NL	nozzle line
No.	number
NPT	national pipe thread

O

O/C	on center
OD	outside diameter

P

P	part circle
PB	pull box
PCC	portland cement concrete
PE	polyethylene
Pkt	packet
PL	plastic
PLT	plant/planting
PLT ESTB	plant establishment
PR	pressure rated
PRLV	pressure relief valve
PRV	pressure reducing valve
PVC	polyvinyl chloride
PSFM	polymer stabilized fiber matrix
Pvmt	pavement

Q

Q	quarter circle
QCV	quick coupling valve

R

R	radius
RCP	reinforced concrete pipe
RCV	remote control valve
RCVM	remote control valve (master)
RCVM	remote control valve (master) w/flow meter
RCW	reclaimed water
REQ	required
R/W	right of way

S

S	slip
SCC	sprinkler control conduit
SCH	schedule
SF	state-furnished
Shld	shoulder
SI	international system of units
SST	side strip
STA	station
Std	standard
SW	sidewalk/sound wall

T

T	third circle/thread
TLS	truck loading standpipe
TQ	three quarter circle
TRM	turf reinforcement mat
TRVD	traveled
TT	two third circle
Typ	typical

U

UG	underground

V

VAU	valve assembly unit

W

W/	with
W	width
WM	water meter
WS	wye strainer
WSP	welded steel pipe
WWM	welded wire mesh

METRIC UNITS (SI)

SYMBOL	UNIT
mm	millimeter
m	meter
m^2	square meter
m^3	cubic meter
g	gram
kg	kilogram
s	second
kPa	kilopascal
L	liter
ha	hectare

NOTE

FOR ADDITIONAL ABBREVIATIONS, SEE STANDARD PLANS A10A AND A10B.

ALL DIMENSIONS ARE IN MILLIMETERS UNLESS OTHERWISE SHOWN

LANDSCAPE DETAILS

PLANTING AND IRRIGATION ABBREVIATIONS

LD-5

STATE OF CALIFORNIA - DEPARTMENT OF TRANSPORTATION
Caltrans
LANDSCAPE

SENIOR LANDSCAPE ARCHITECT: K. MURRAY
CALCULATED-DESIGNED BY: JEFFREY L. PIETRZAK
CHECKED BY: T. CHRIS JOHNSON
REVISED BY: JLP
DATE REVISED: 7/1/10

LAST REVISION DATE PLOTTED => 02-AUG-2010
TIME PLOTTED => 15:30

Dist	COUNTY	ROUTE	KILOMETER POST TOTAL PROJECT	SHEET No.	TOTAL SHEETS
03	Sut	99	T49.2/R51.8	49	88

7-12-10
LICENSED LANDSCAPE ARCHITECT

7-26-10
PLANS APPROVAL DATE

LICENSED LANDSCAPE ARCHITECT JEFFREY L. PIETRZAK No. 4457 Signature 12-31-11 Renewal Date 5-1-10 Date STATE OF CALIFORNIA

THE STATE OF CALIFORNIA OR ITS OFFICERS OR AGENTS SHALL NOT BE RESPONSIBLE FOR THE ACCURACY OR COMPLETENESS OF ELECTRONIC COPIES OF THIS PLAN SHEET.

Caltrans Metric

EXISTING	PROPOSED	ITEM DESCRIPTION
		WATER METER (WM)
		BACKFLOW PREVENTER ASSEMBLY (BPA)
		BACKFLOW PREVENTER ASSEMBLY IN ENCLOSURE (BPAE)
		BACKFLOW PREVENTER ENCLOSURE (BPE)
		BOOSTER PUMP (BP)
		TRUCK LOADING STANDPIPE (TLS)
	FS	FLOW SENSOR (FS)
X	X	MASTER IRRIGATION CONTROLLER (MIC)
X	X	AUXILIARY IRRIGATION CONTROLLER (AIC)
		IRRIGATION CONTROLLER (IC)/ IRRIGATION CONTROLLER (IC) (BATTERY) IRRIGATION CONTROLLER (IC) (SOLAR)
		IRRIGATION CONTROLLER(S) IN CONTROLLER ENCLOSURE CABINET (ICC)
		CONTROL AND NEUTRAL CONDUCTORS (CNC)
SCC	SCC	SPRINKLER CONTROL CONDUIT (SCC)
		EXTEND IRRIGATION CROSSOVER
		IRRIGATION SLEEVE
dip	DIP	DUCTILE IRON PIPE (SUPPLY LINE) (MAIN) (DIP)
		GALVANIZED STEEL PIPE (SUPPLY LINE) (MAIN) (GSP)
		GALVANIZED STEEL PIPE (SUPPLY LINE) (LATERAL) (GSP)
		PLASTIC PIPE (PR 200) (SUPPLY LINE) (MAIN)
		PLASTIC PIPE (PR 200) (SUPPLY LINE) (LATERAL)
		PLASTIC PIPE (IRRIGATION LINE)
		REMOTE CONTROL VALVE (RCV) REMOTE CONTROL VALVE (MASTER) (RCVM) REMOTE CONTROL VALVE (MASTER) W/FLOW METER (RCVMF)
		MANUAL CONTROL VALVE (MCV)
		VALVE ASSEMBLY UNIT (VAU)
		WYE STRAINER (WS)
		FILTER ASSEMBLY UNIT (FAU)
		GATE VALVE (GV)
		BALL VALVE (BV)

EXISTING	PROPOSED	ITEM DESCRIPTION
		QUICK COUPLING VALVE (QCV)
		CAM COUPLING ASSEMBLY (CCA)
		PRESSURE REDUCING VALVE (PRV)
		PRESSURE RELIEF VALVE (PRLV)
		FLOW CONTROL VALVE (FCV)
		COMBINATION AIR RELEASE VALVE (CARV)
		CHECK VALVE (CV)
		FLUSH VALVE (FV)
		NOZZLE LINE W/TURNING UNION
		IRRIGATION SYSTEM
		IRRIGATION SYSTEM TO BE REMOVED
		CHAIN LINK GATE
		QUICK COUPLING VALVE W/SPRINKLER PROTECTOR
3	3	SPRINKLER W/SPRINKLER PROTECTOR
	C	CONNECT TO EXISTING SYSTEM
		CAP
		CAP EXISTING

VALVE CODE

RCV SIZE (mm)
IRRIGATION CONTROLLER
CONTROLLER STATION
VALVE IN PARALLEL (IF APPLICABLE)
L/min
QUANTITY OF SPRINKLERS (WHEN SHOWN)

* 63.5-A-2b-151.4-60

MCV SIZE (mm)
VALVE NUMBER
L/min
QUANTITY OF TYPE SPRINKLERS (WHEN SHOWN)

* 50.8-3-113.5-50

* VALVE CODES FOR EXISTING VALVES ARE SHOWN IN A DASHED ENCLOSURE.

ALL DIMENSIONS ARE IN MILLIMETERS UNLESS OTHERWISE SHOWN

LANSCAPE DETAILS
(PLANTING AND IRRIGATION SYMBOLS)

LD-6

2004 Std PLAN H2

LAST REVISION DATE PLOTTED => 02-AUG-2010
TIME PLOTTED => 15:30

STATE OF CALIFORNIA - DEPARTMENT OF TRANSPORTATION
Caltrans
LANDSCAPE

SENIOR LANDSCAPE ARCHITECT: K. MURRAY
CALCULATED-DESIGNED BY: JEFFREY L. PIETRZAK
CHECKED BY: T. CHRIS JOHNSON
REVISED BY: JLP
DATE REVISED: 7/1/10

Dist	COUNTY	ROUTE	KILOMETER POST TOTAL PROJECT	SHEET No.	TOTAL SHEETS
03	Sut	99	T49.2/R51.8	50	88

Jeffrey L. Pietrzak 7-12-10
LICENSED LANDSCAPE ARCHITECT

7-26-10
PLANS APPROVAL DATE

LICENSED LANDSCAPE ARCHITECT JEFFREY L. PIETRZAK No. 4457 Signature 12-31-11 Renewal Date 5-1-10 Date STATE OF CALIFORNIA

THE STATE OF CALIFORNIA OR ITS OFFICERS OR AGENTS SHALL NOT BE RESPONSIBLE FOR THE ACCURACY OR COMPLETENESS OF ELECTRONIC COPIES OF THIS PLAN SHEET.

Caltrans Metric

Top of stakes to have minimum 100 mm clearance from bottom of tree crown where applicable

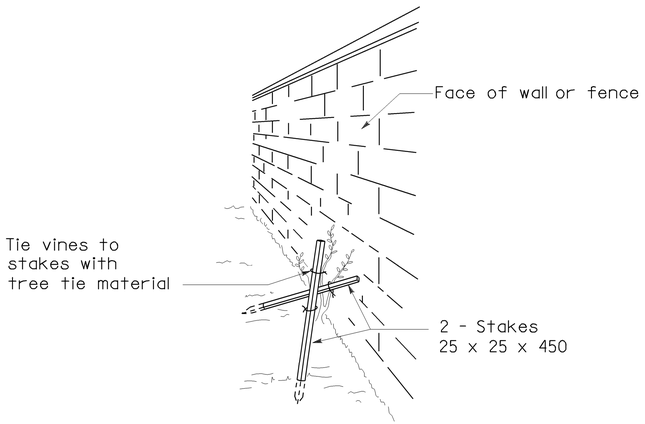

PERSPECTIVE
VINE STAKING

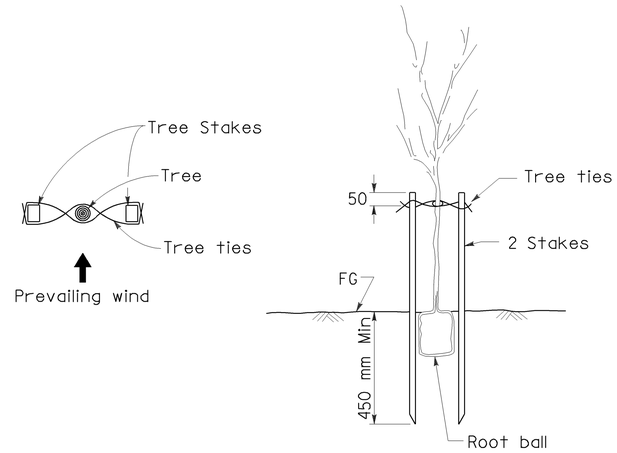

TREE STAKING

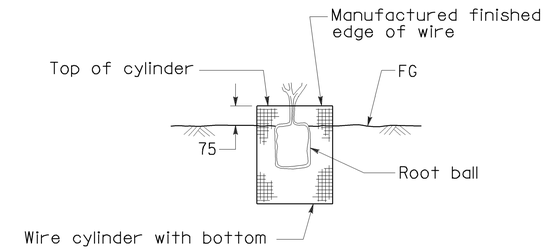

SECTION
ROOT PROTECTOR

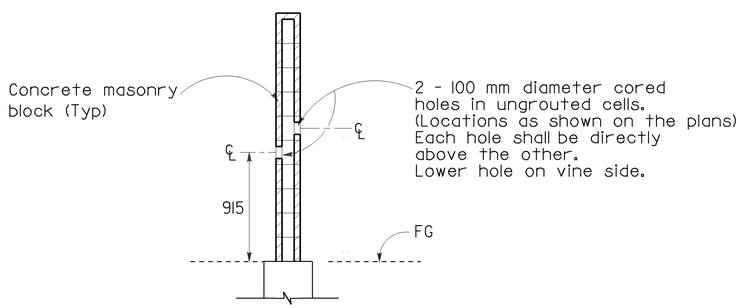

SECTION
CORE HOLE (PLANT)

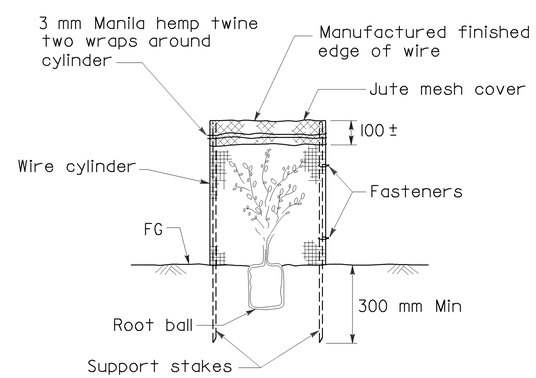

SECTION
FOLIAGE PROTECTOR

ALL DIMENSIONS ARE IN MILLIMETERS UNLESS OTHERWISE SHOWN

LANDSCAPE DETAILS
(PLANTING AND IRRIGATION DETAILS)

NO SCALE

LD-7

STATE OF CALIFORNIA - DEPARTMENT OF TRANSPORTATION
Caltrans
LANDSCAPE

SENIOR LANDSCAPE ARCHITECT: K. MURRAY
CALCULATED-DESIGNED BY: JEFFREY L. PIETRZAK
CHECKED BY: T. CHRIS JOHNSON
REVISED BY: JLP
DATE REVISED: 7/1/10

LAST REVISION DATE PLOTTED => 02-AUG-2010
TIME PLOTTED => 15:30

Dist	COUNTY	ROUTE	KILOMETER POST TOTAL PROJECT	SHEET No.	TOTAL SHEETS
03	Sut	99	T49.2/R51.8	51	88

7-12-10
LICENSED LANDSCAPE ARCHITECT

7-26-10
PLANS APPROVAL DATE

LICENSED LANDSCAPE ARCHITECT JEFFREY L. PIETRZAK No. 4457 Signature 12-31-11 Renewal Date 5-1-10 Date STATE OF CALIFORNIA

THE STATE OF CALIFORNIA OR ITS OFFICERS OR AGENTS SHALL NOT BE RESPONSIBLE FOR THE ACCURACY OR COMPLETENESS OF ELECTRONIC COPIES OF THIS PLAN SHEET.

Caltrans Metric

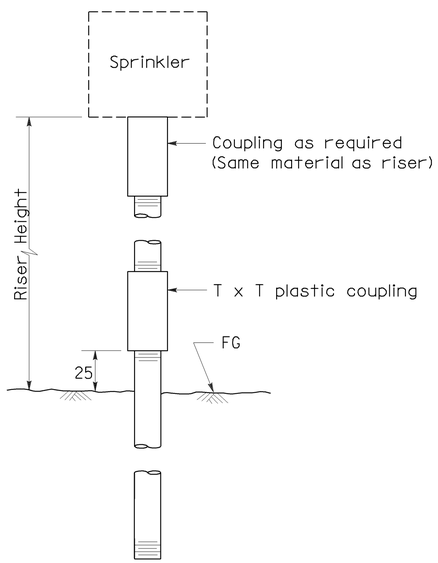

ELEVATION
RISER TYPE I

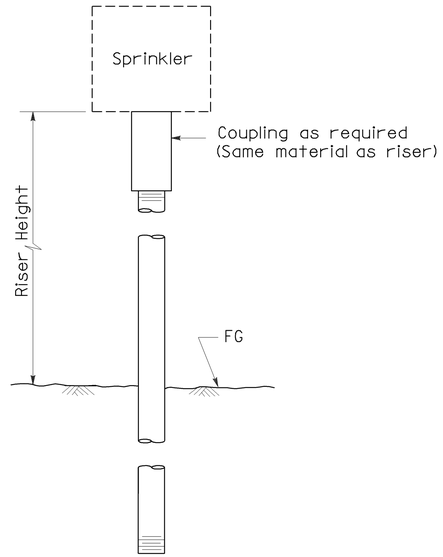

ELEVATION
RISER TYPE II

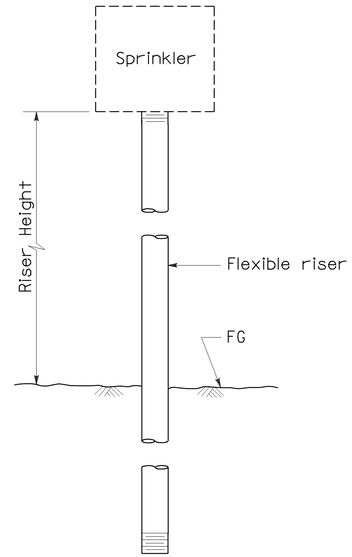

ELEVATION
RISER TYPE III

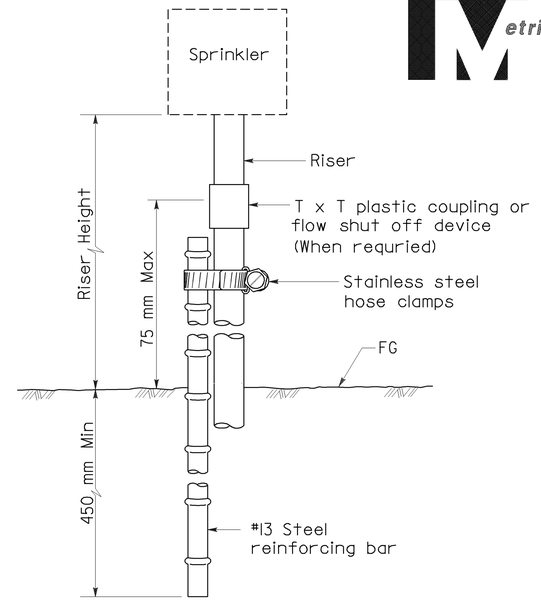

ELEVATION
RISER TYPE IV

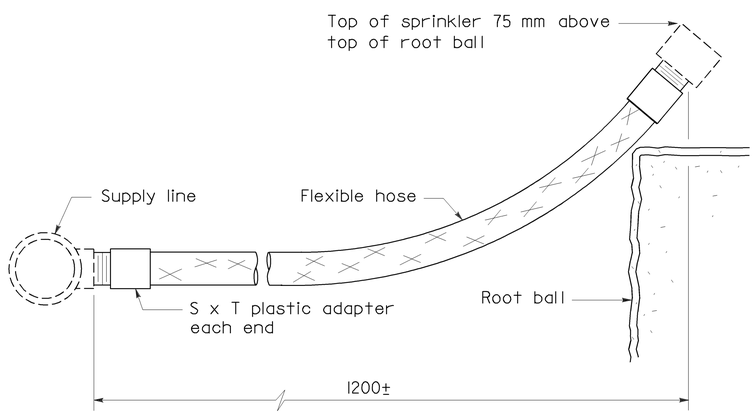

ELEVATION
RISER TYPE V

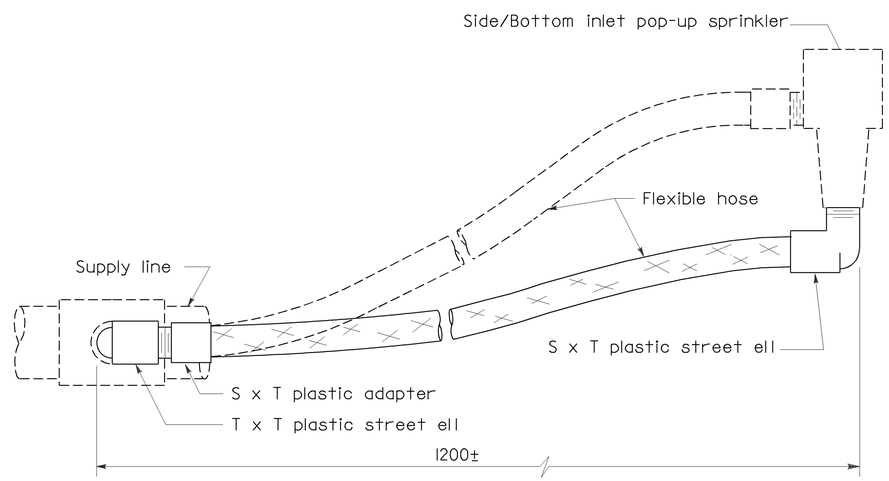

ELEVATION
RISER TYPE VI

ALL DIMENSIONS ARE IN
MILLIMETERS UNLESS OTHERWISE SHOWN

LANDSCAPE DETAILS
(PLANTING AND IRRIGATION DETAILS)

NO SCALE

LD-8

STATE OF CALIFORNIA - DEPARTMENT OF TRANSPORTATION
Caltrans
LANDSCAPE

SENIOR LANDSCAPE ARCHITECT: K. MURRAY
CALCULATED-DESIGNED BY: JEFFREY L. PIETRZAK
CHECKED BY: T. CHRIS JOHNSON
REVISED BY: JLP
DATE REVISED: 7/1/10

LAST REVISION
DATE PLOTTED => 02-AUG-2010
TIME PLOTTED => 15:30

Dist	COUNTY	ROUTE	KILOMETER POST TOTAL PROJECT	SHEET No.	TOTAL SHEETS
03	Sut	99	T49.2/R51.8	52	88

Jeffrey L. Pietrzak 7-12-10
LICENSED LANDSCAPE ARCHITECT

7-26-10
PLANS APPROVAL DATE

LICENSED LANDSCAPE ARCHITECT JEFFREY L. PIETRZAK No. 4457 Signature 12-31-11 Renewal Date 5-1-10 Date STATE OF CALIFORNIA

THE STATE OF CALIFORNIA OR ITS OFFICERS OR AGENTS SHALL NOT BE RESPONSIBLE FOR THE ACCURACY OR COMPLETENESS OF ELECTRONIC COPIES OF THIS PLAN SHEET.

Caltrans Metric

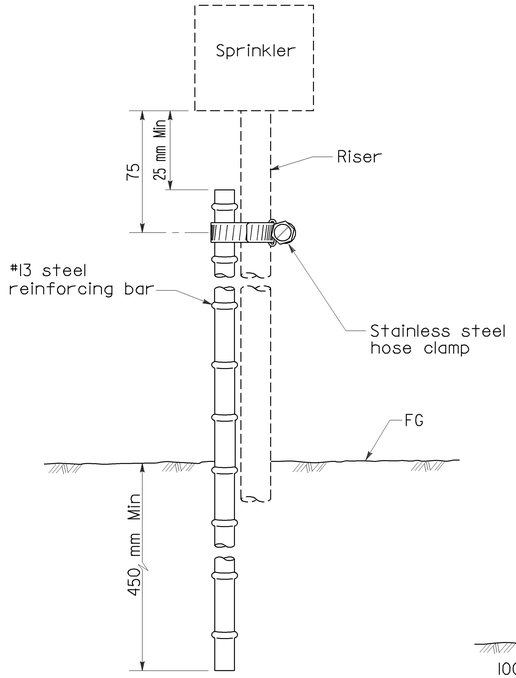

ELEVATION
RISER SUPPORT

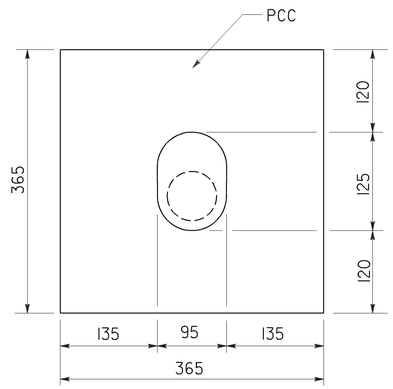

PLAN

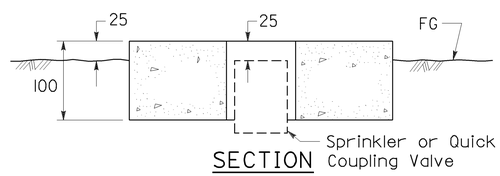

SECTION
SPRINKLER PROTECTOR TYPE I

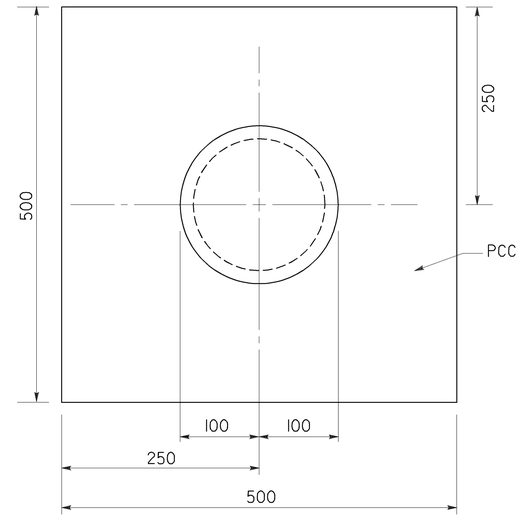

PLAN

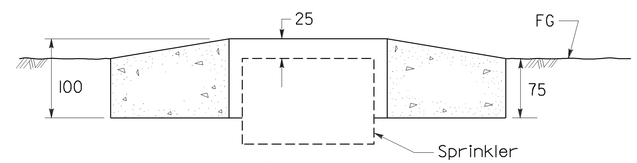

SECTION
SPRINKLER PROTECTOR TYPE II

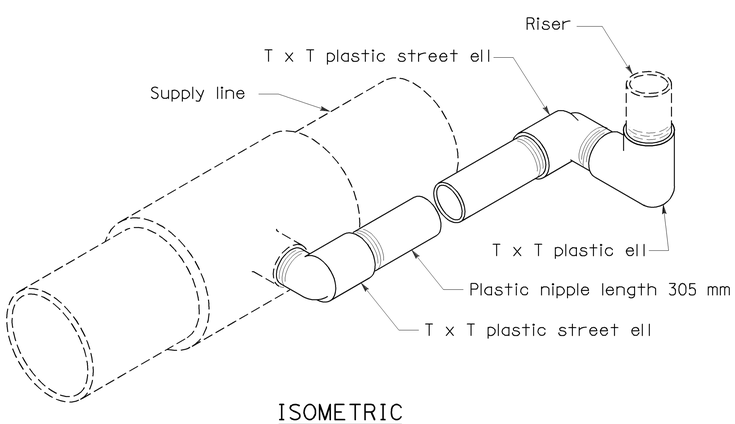

ISOMETRIC
SWING JOINT TYPE I

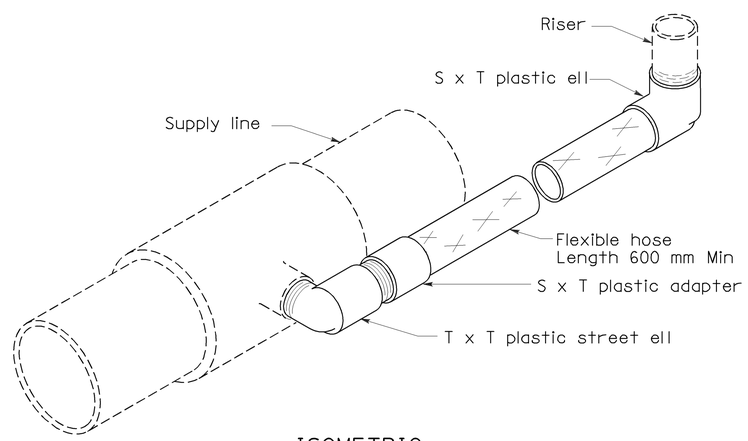

ISOMETRIC
SWING JOINT TYPE II

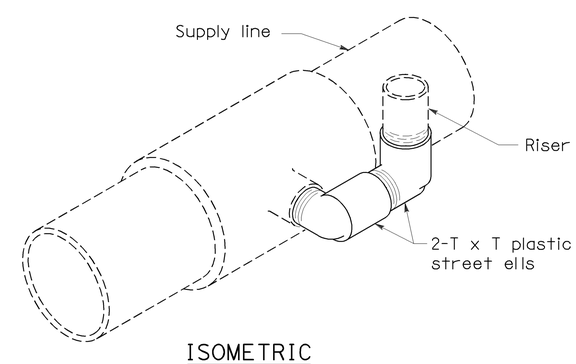

ISOMETRIC
SWING JOINT TYPE III

ALL DIMENSIONS ARE IN MILLIMETERS UNLESS OTHERWISE SHOWN

LANDSCAPE DETAILS
(PLANTING AND IRRIGATION DETAILS)

NO SCALE

LD-9

STATE OF CALIFORNIA - DEPARTMENT OF TRANSPORTATION
Caltrans
LANDSCAPE
SENIOR LANDSCAPE ARCHITECT K. MURRAY
CALCULATED-DESIGNED BY JEFFREY L. PIETRZAK
CHECKED BY T. CHRIS JOHNSON
REVISED BY JLP
DATE REVISED 7/1/10

LAST REVISION DATE PLOTTED => 02-AUG-2010
TIME PLOTTED => 15:30

Dist	COUNTY	ROUTE	KILOMETER POST TOTAL PROJECT	SHEET No.	TOTAL SHEETS
03	Sut	99	T49.2/R51.8	53	88

Jeffrey L. Pietrzak 7-12-10
LICENSED LANDSCAPE ARCHITECT

7-26-10
PLANS APPROVAL DATE

LICENSED LANDSCAPE ARCHITECT JEFFREY L. PIETRZAK No. 4457 Signature 12-31-11 Renewal Date 5-1-10 Date STATE OF CALIFORNIA

THE STATE OF CALIFORNIA OR ITS OFFICERS OR AGENTS SHALL NOT BE RESPONSIBLE FOR THE ACCURACY OR COMPLETENESS OF ELECTRONIC COPIES OF THIS PLAN SHEET.

Caltrans Metric

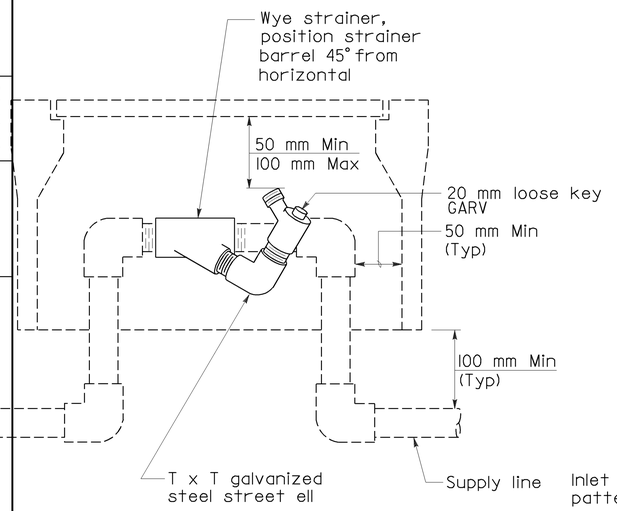

ELEVATION
WYE STRAINER

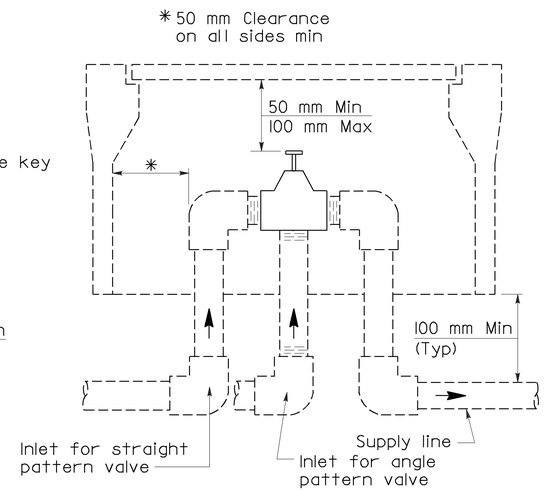

ELEVATION
VALVE

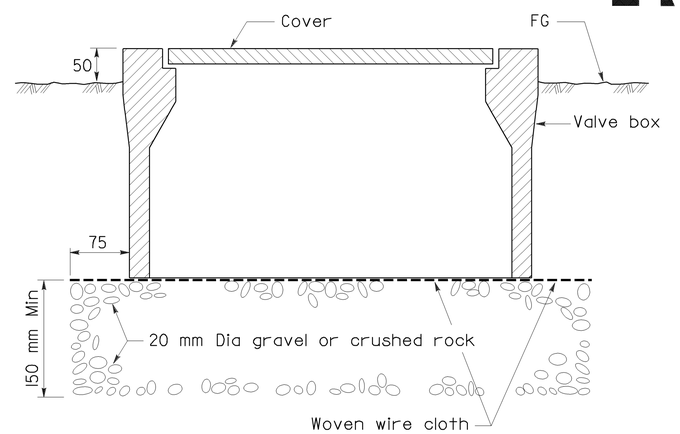

SECTION
VALVE BOX

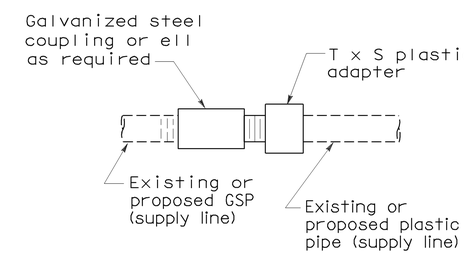

PLAN
GALVANIZED AND PLASTIC PIPE CONNECTION

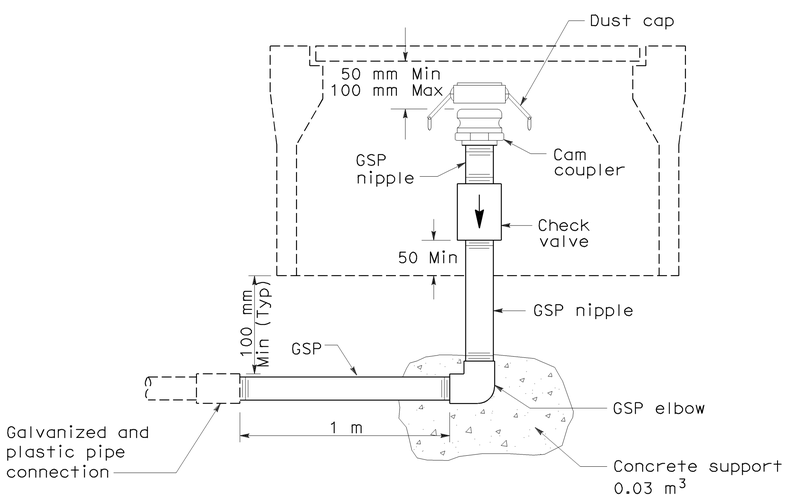

ELEVATION
CAM COUPLER ASSEMBLY

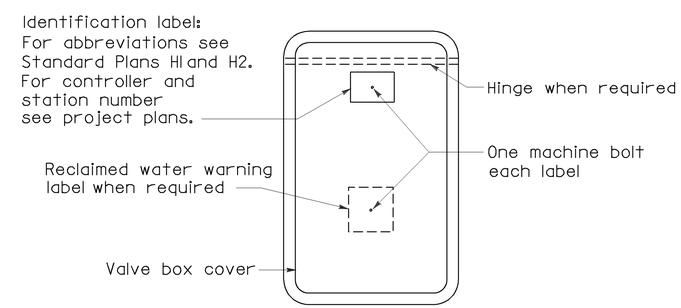

PLAN

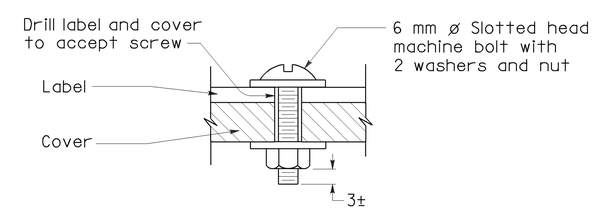

SECTION
VALVE BOX IDENTIFICATION

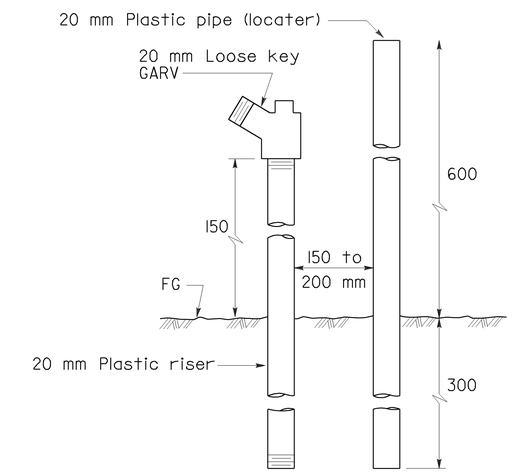

ELEVATION
FLUSH VALVE

ALL DIMENSIONS ARE IN MILLIMETERS UNLESS OTHERWISE SHOWN

LANDSCAPE DETAILS
(PLANTING AND IRRIGATION DETAILS)

NO SCALE

LD-10

JLP	7/1/10	JEFFREY L. PIETRZAK	T. CHRIS JOHNSON
REVISED BY	DATE REVISED	CALCULATED-DESIGNED BY	CHECKED BY

SENIOR LANDSCAPE ARCHITECT: K. MURRAY

STATE OF CALIFORNIA - DEPARTMENT OF TRANSPORTATION
Caltrans
LANDSCAPE

LAST REVISION: DATE PLOTTED => 02-AUG-2010 TIME PLOTTED => 15:30

Dist	COUNTY	ROUTE	KILOMETER POST TOTAL PROJECT	SHEET No.	TOTAL SHEETS
03	Sut	99	T49.2/R51.8	54	88

Jeffrey L. Pietrzak 7-12-10
LICENSED LANDSCAPE ARCHITECT

7-26-10
PLANS APPROVAL DATE

LICENSED LANDSCAPE ARCHITECT JEFFREY L. PIETRZAK No. 4457 Signature 12-31-11 Renewal Date 5-1-10 Date STATE OF CALIFORNIA

THE STATE OF CALIFORNIA OR ITS OFFICERS OR AGENTS SHALL NOT BE RESPONSIBLE FOR THE ACCURACY OR COMPLETENESS OF ELECTRONIC COPIES OF THIS PLAN SHEET.

Caltrans Metric

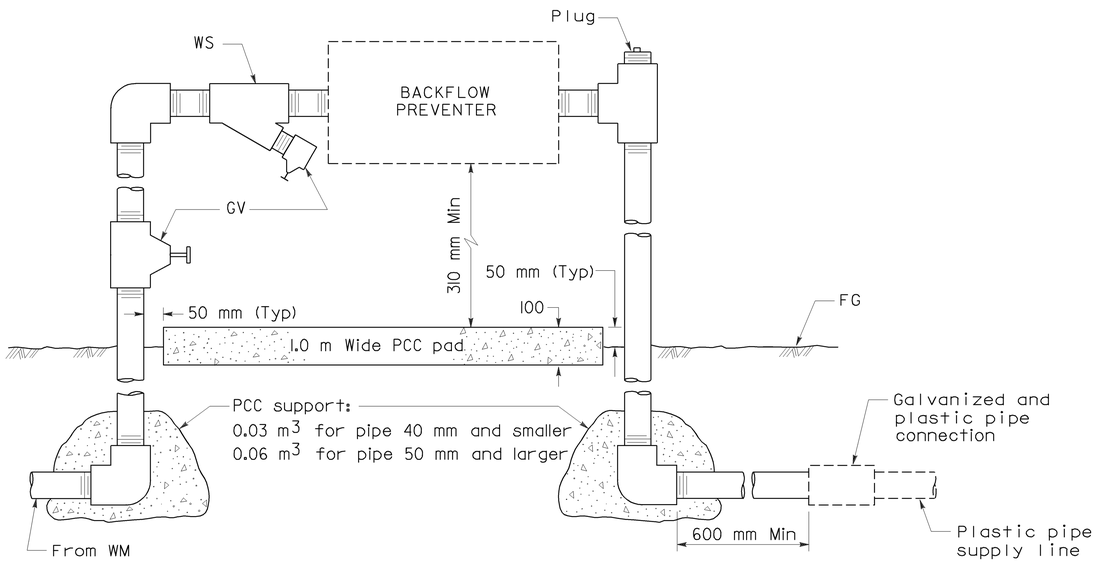

ELEVATION
BACKFLOW PREVENTER ASSEMBLY

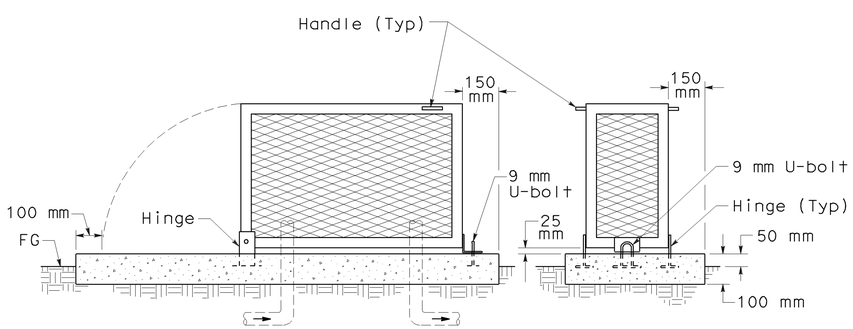

SIDE ELEVATION FRONT ELEVATION
BACKFLOW PREVENTER ASSEMBLY ENCLOSURE

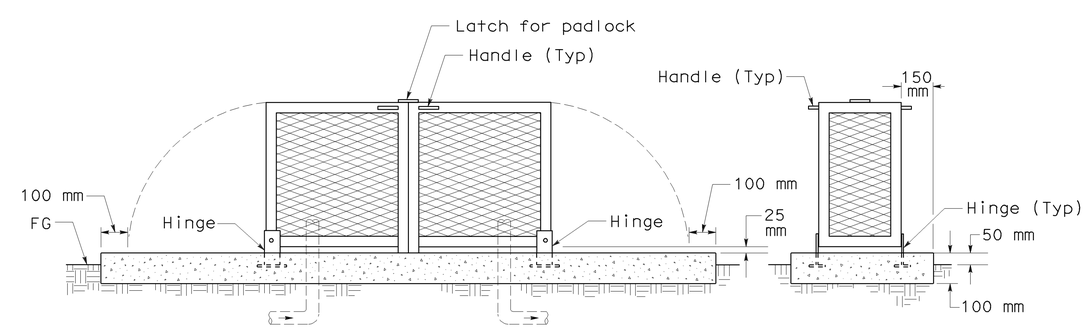

SIDE ELEVATION FRONT ELEVATION
BACKFLOW PREVENTER ASSEMBLY ENCLOSURE
Two Piece

ALL DIMENSIONS ARE IN MILLIMETERS UNLESS OTHERWISE SHOWN

LANDSCAPE DETAILS
(PLANTING AND IRRIGATION DETAILS)

NO SCALE

LD-11

STATE OF CALIFORNIA - DEPARTMENT OF TRANSPORTATION	SENIOR LANDSCAPE ARCHITECT	K. MURRAY	
Caltrans	LANDSCAPE		
CALCULATED-DESIGNED BY	JEFFREY L. PIETRZAK	REVISED BY	JLP
CHECKED BY	T. CHRIS JOHNSON	DATE REVISED	7/1/10

LAST REVISION DATE PLOTTED => 02-AUG-2010
TIME PLOTTED => 15:30

Dist	COUNTY	ROUTE	KILOMETER POST TOTAL PROJECT	SHEET No.	TOTAL SHEETS
03	Sut	99	T49.2/R51.8	55	88

Jeffrey L. Pietrzak 7-12-10
LICENSED LANDSCAPE ARCHITECT

7-26-10
PLANS APPROVAL DATE

LICENSED LANDSCAPE ARCHITECT JEFFREY L. PIETRZAK No. 4457 Signature 12-31-11 Renewal Date 5-1-10 Date STATE OF CALIFORNIA

THE STATE OF CALIFORNIA OR ITS OFFICERS OR AGENTS SHALL NOT BE RESPONSIBLE FOR THE ACCURACY OR COMPLETENESS OF ELECTRONIC COPIES OF THIS PLAN SHEET.

Caltrans Metric

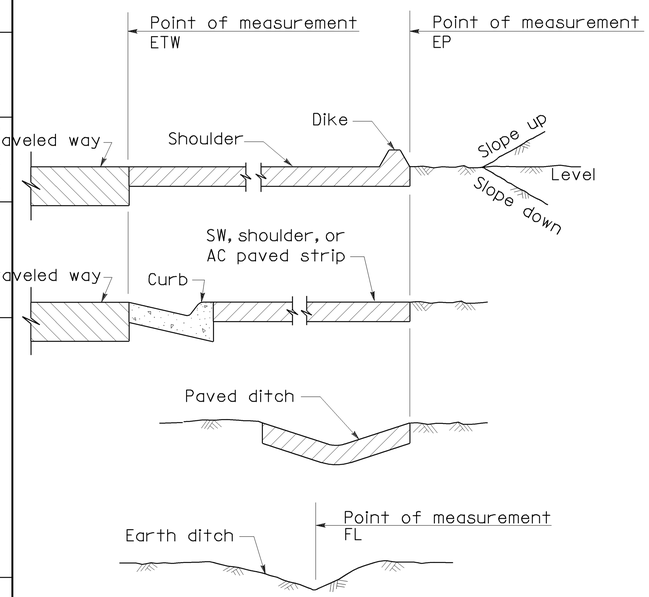

SECTION
POINTS OF MEASUREMENT

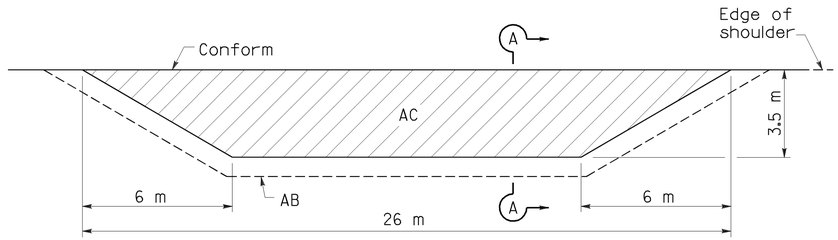

PLAN

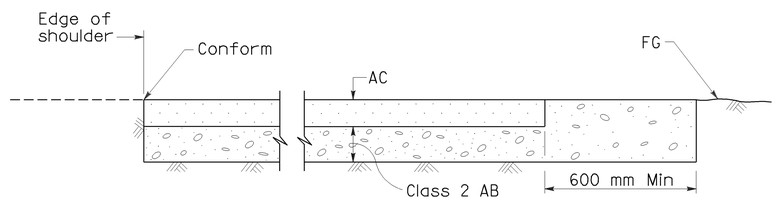

SECTION A-A
ROADSIDE PAVING (MISCELLANEOUS AREAS)
(MAINTENANCE VEHICLE PULLOUT)

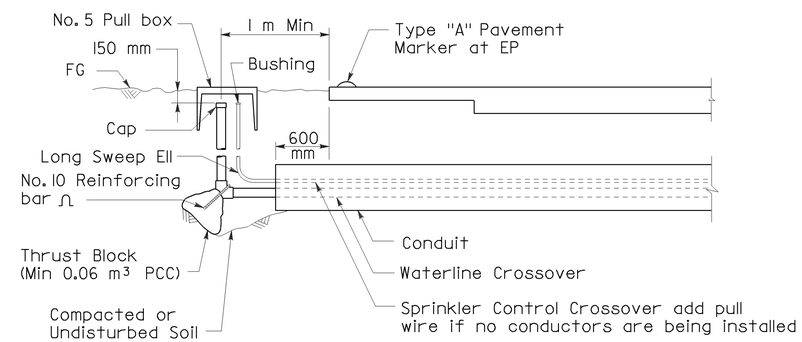

SECTION
IRRIGATION CROSSOVER

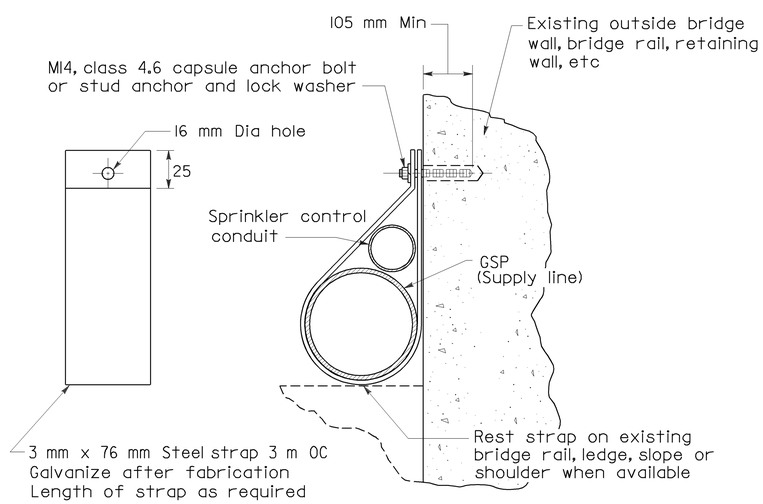

PIPE ANCHOR TYPE I

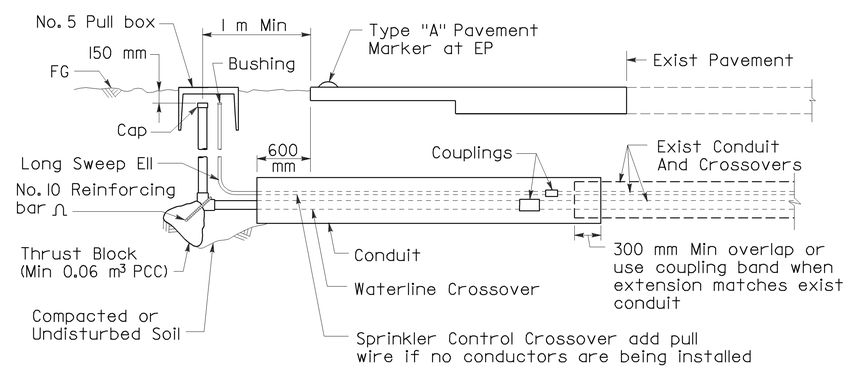

SECTION
EXTEND IRRIGATION CROSSOVER

ALL DIMENSIONS ARE IN
MILLIMETERS UNLESS OTHERWISE SHOWN

LANDSCAPE DETAILS
(PLANTING AND IRRIGATION DETAILS)

NO SCALE

LD-12

JLP	7/1/10	JEFFREY L. PIETRZAK	T. CHRIS JOHNSON
REVISED BY	DATE REVISED	CALCULATED-DESIGNED BY	CHECKED BY

SENIOR LANDSCAPE ARCHITECT K. MURRAY

STATE OF CALIFORNIA - DEPARTMENT OF TRANSPORTATION
Caltrans
LANDSCAPE

LAST REVISION DATE PLOTTED => 02-AUG-2010
TIME PLOTTED => 15:30

Dist	COUNTY	ROUTE	KILOMETER POST TOTAL PROJECT	SHEET No.	TOTAL SHEETS
03	Sut	99	T49.2/R51.8	56	88

Jeffrey L. Pietrzak 7-12-10
LICENSED LANDSCAPE ARCHITECT

7-26-10
PLANS APPROVAL DATE

LICENSED LANDSCAPE ARCHITECT JEFFREY L. PIETRZAK No. 4457 Signature 12-31-11 Renewal Date 5-1-10 Date STATE OF CALIFORNIA

THE STATE OF CALIFORNIA OR ITS OFFICERS OR AGENTS SHALL NOT BE RESPONSIBLE FOR THE ACCURACY OR COMPLETENESS OF ELECTRONIC COPIES OF THIS PLAN SHEET.

Caltrans Metric

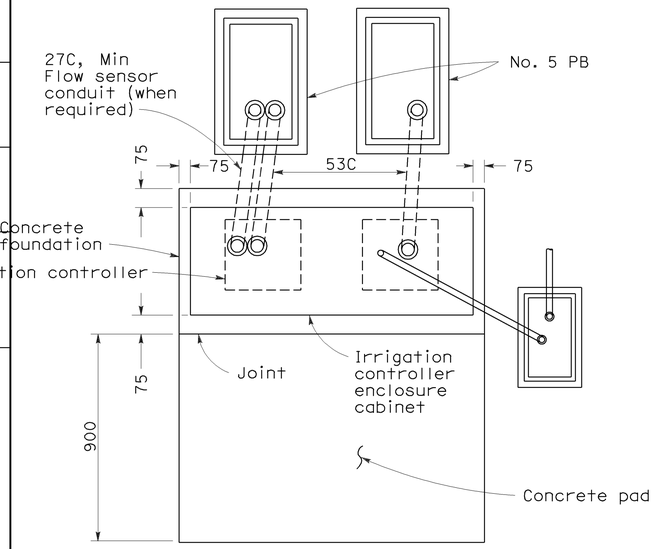

PLAN

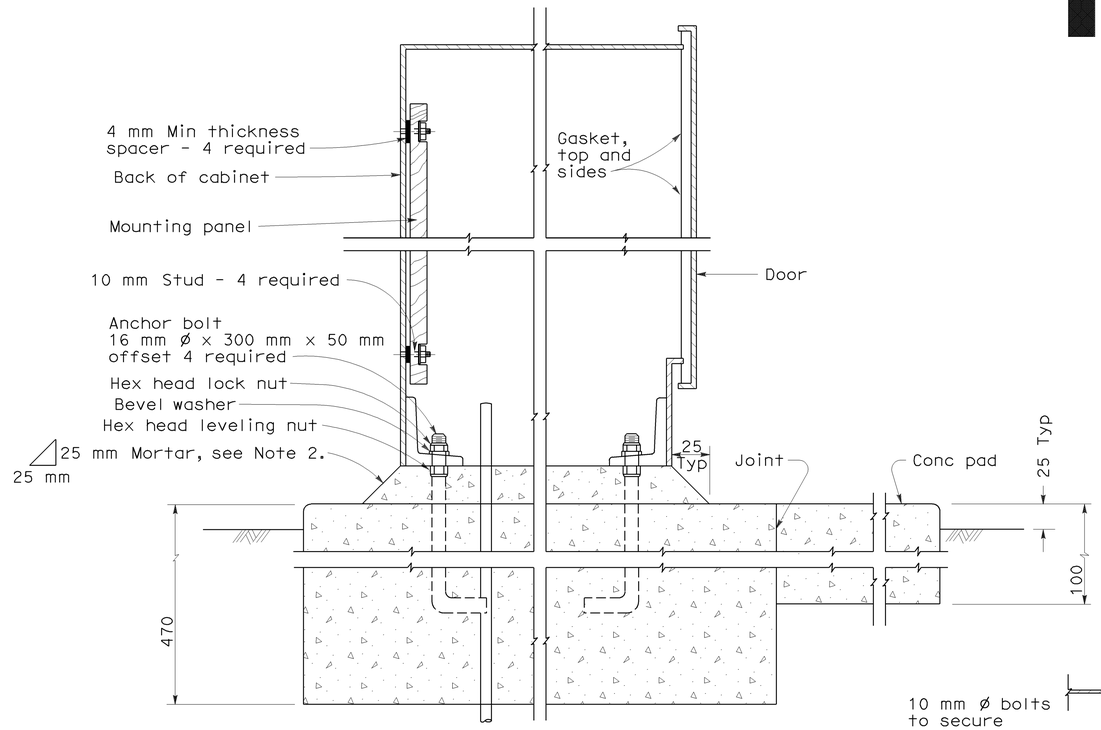

CABINET SECTION

NOTES

1. All dimensions are nominal.
2. Mortar shall be 1-part cement, 2-parts plaster sand.
3. Rain sensor unit and/or remote control valve actuator connectors. To be provided only when specified.
4. See project plans for location and number of irrigation controllers for each cabinet.
5. The electrical items shown in dropout are not labled. See Standard Plan ES-3H for electrical requirements.

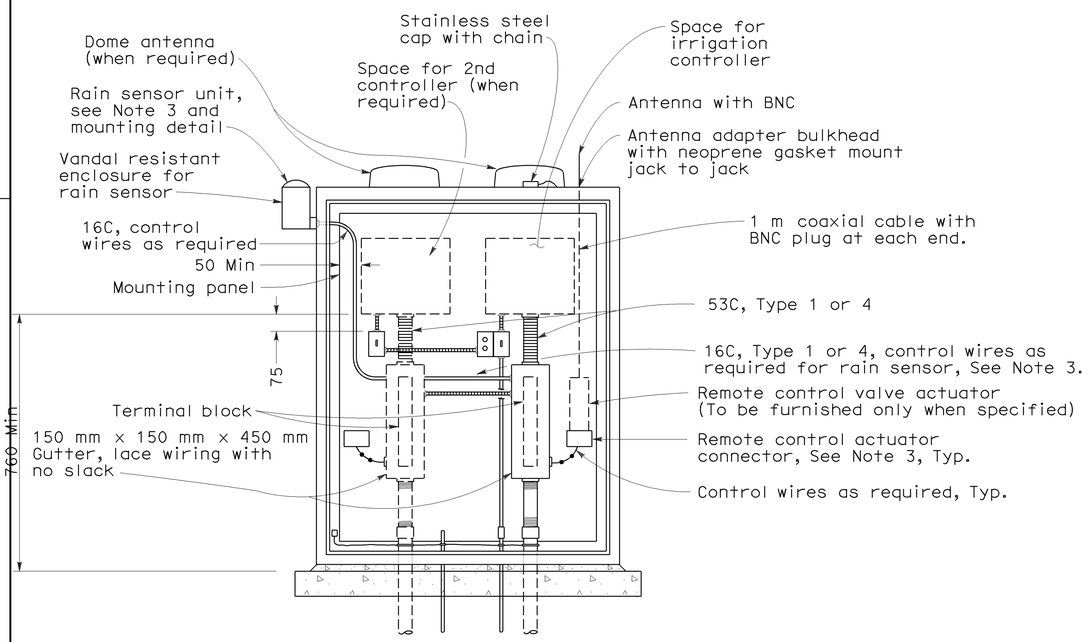

ELEVATION

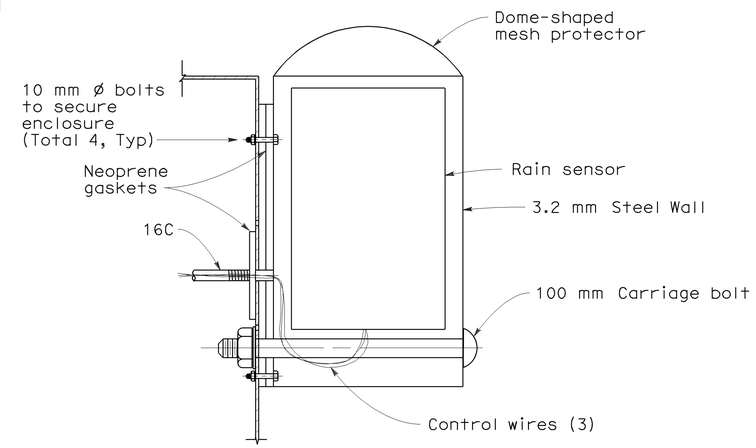

RAIN SENSOR UNIT

ALL DIMENSIONS ARE IN
MILLIMETERS UNLESS OTHERWISE SHOWN

LANDSCAPE DETAILS

(IRRIGATION CONTROLLER ENCLOSURE CABINET)

NO SCALE

LD-13

JLP	JEFFREY L. PIETRZAK	K. MURRAY
7/1/10	T. CHRIS JOHNSON	

REVISED BY / DATE REVISED
CALCULATED-DESIGNED BY / CHECKED BY
SENIOR LANDSCAPE ARCHITECT

STATE OF CALIFORNIA - DEPARTMENT OF TRANSPORTATION
Caltrans
LANDSCAPE

LAST REVISION
DATE PLOTTED => 02-AUG-2010
TIME PLOTTED => 15:30

Dist	COUNTY	ROUTE	KILOMETER POST TOTAL PROJECT	SHEET No.	TOTAL SHEETS
03	Sut	99	T49.2/R51.8	57	88

Jeffrey L. Pietrzak 7-12-10
LICENSED LANDSCAPE ARCHITECT

7-26-10
PLANS APPROVAL DATE

LICENSED LANDSCAPE ARCHITECT JEFFREY L. PIETRZAK No. 4457 Signature 12-31-11 Renewal Date 5-1-10 Date STATE OF CALIFORNIA

THE STATE OF CALIFORNIA OR ITS OFFICERS OR AGENTS SHALL NOT BE RESPONSIBLE FOR THE ACCURACY OR COMPLETENESS OF ELECTRONIC COPIES OF THIS PLAN SHEET.

Caltrans Metric

ABBREVIATIONS

EA — each
DIP — ductile iron pipe
GSP — galvanized steel pipe
m — meter
mm — millimeter
PR — pressure rated

SUBTOTALS PER VALVE ON LATERAL SUPPLY SIDE OF CONTROL VALVE

DESCRIPTION			UNIT	VALVE OR ASSEMBLY NUMBER																SUBTOTALS	UNIT	DESCRIPTION		
				AI-1	AI-2	AI-3	AI-4	AI-5	AI-6	AI-7	AI-8	AI-9	AI-10	AI-11	AI-12	AI-13	AI-14	AI-15	AI-16	AI-17					
PLASTIC PIPE SUPPLY LINE	PR 200	20 mm	m	78	10	51	67	20	115	40	188	20	50	96	91	45	13	140	67	26	1 117	m	20 mm	PR 200	PLASTIC PIPE SUPPLY LINE
		25 mm	m	-	-	20	102	14	65	59	-	20	46	-	-	39	13	57	25	22	482	m	25 mm		
		32 mm	m	-	-	-	144	60	195	30	-	30	-	-	-	25	13	40	56	11	604	m	32 mm		
		40 mm	m	-	-	-	-	16	-	30	-	30	-	-	-	5	13	78	46	8	226	m	40 mm		
		50 mm	m	-	-	-	-	64	91	64	-	37	-	170	183	-	75	5	-	143	832	m	50 mm		
		65 mm	m	-	-	-	-	-	-	-	-	-	-	-	-	20	-	-	-	56	76	m	65 mm		
		75 mm	m	-	-	-	-	-	-	-	-	-	-	-	-	-	-	-	-	-	-	m	75 mm		
	PR 315																							PR 315	
GSP																									GSP
DIP																									DIP
SPRINKLER TYPE		A-8	EA	-	-	-	-	-	-	-	-	-	-	-	-	-	6	-	-	10	16	EA	A-8		SPRINKLER TYPE
		A-7	EA	-	-	-	-	-	-	16	-	12	-	-	-	11	-	-	-	-	39	EA	A-7		
		A-6	EA	-	-	-	-	-	-	-	9	-	-	-	-	-	-	-	17	-	26	EA	A-6		
		A-5	EA	-	-	8	-	-	-	-	-	-	7	-	-	-	-	27	-	-	42	EA	A-5		
		B-4	EA	2	-	-	-	-	-	-	-	-	-	-	-	-	-	-	-	-	2	EA	B-4		
		B-2	EA	-	-	-	-	19	-	-	-	-	-	-	-	-	-	-	-	-	19	EA	B-2		
		B-1	EA	-	-	-	-	-	-	-	-	-	-	-	-	-	-	-	-	-	-	EA	B-1		
		C-2	EA	-	7	-	33	-	-	-	-	-	-	21	-	-	-	-	-	-	61	EA	C-2		
		C-1	EA	-	-	-	-	-	15	-	-	-	-	-	9	-	-	-	-	-	24	EA	C-1		

DESCRIPTION			UNIT	VALVE OR ASSEMBLY NUMBER																					SUBTOTALS	UNIT	DESCRIPTION		
				A2-1	A2-2	A2-3	A2-4	A2-5	A2-6	A2-7	A2-8	A2-9	A2-10	A2-11	A2-12	A2-13	A2-14	A2-15	A2-16	A2-17	A2-18	A2-19	A2-20	A2-21	A2-22					
PLASTIC PIPE SUPPLY LINE	PR 200	20 mm	m	14	42	14	8	43	14	28	28	14	175	14	45	235	60	28	77	28	155	33	-	-	-	1 055	m	20 mm	PR 200	PLASTIC PIPE SUPPLY LINE
		25 mm	m	14	8	14	8	24	14	28	28	14	-	14	28	6	60	24	-	28	-	14	-	-	-	326	m	25 mm		
		32 mm	m	14	195	14	14	65	14	34	28	14	-	14	28	-	31	14	112	18	-	-	-	-	-	609	m	32 mm		
		40 mm	m	14	-	14	175	30	14	-	28	14	-	14	10	-	-	14	-	14	-	-	-	-	-	341	m	40 mm		
		50 mm	m	39	-	39	-	44	14	-	25	39	-	39	-	-	10	30	-	36	-	-	-	-	-	315	m	50 mm		
		65 mm	m	39	-	39	-	10	-	-	8	39	-	39	-	-	-	20	-	30	-	-	-	-	-	224	m	65 mm		
		75 mm	m	60	-	75	-	30	-	-	185	35	-	82	-	-	-	-	-	-	-	-	-	-	-	467	m	75 mm		
	PR 315																												PR 315	
GSP																														GSP
DIP																														DIP
SPRINKLER TYPE		A-8	EA	15	-	11	-	-	5	-	15	12	-	15	-	-	-	9	-	10	-	-	-	-	-	92	EA	A-8		SPRINKLER TYPE
		A-7	EA	-	-	-	-	-	-	7	-	-	-	-	10	-	-	-	-	-	-	-	-	-	-	17	EA	A-7		
		A-6	EA	-	-	-	-	-	-	-	-	-	-	-	-	-	-	-	10	-	-	-	-	-	-	10	EA	A-6		
		A-5	EA	-	8	-	-	-	-	-	-	-	-	-	-	-	20	-	-	-	-	5	-	-	-	33	EA	A-5		
		B-4	EA	-	-	-	-	-	-	-	-	-	-	-	-	-	-	-	-	-	-	-	-	-	-	-	EA	B-4		
		B-2	EA	-	-	-	-	50	-	-	-	-	-	-	-	-	-	-	-	-	-	-	-	-	-	50	EA	B-2		
		B-1	EA	-	-	-	9	-	-	-	-	-	-	-	-	-	-	-	-	-	-	-	-	-	-	9	EA	B-1		
		C-2	EA	-	-	-	-	-	-	-	-	-	15	-	-	-	-	-	-	-	-	-	-	-	-	15	EA	C-2		
		C-1	EA	-	-	-	-	-	-	-	-	-	-	-	-	11	-	-	-	-	9	-	-	-	-	20	EA	C-1		

IRRIGATION QUANTITIES IQ-1

JLP	7/1/10	REVISED BY	DATE REVISED
JEFFREY L. PIETRZAK	T. CHRIS JOHNSON	CALCULATED-DESIGNED BY	CHECKED BY
SENIOR LANDSCAPE ARCHITECT	K. MURRAY		

STATE OF CALIFORNIA - DEPARTMENT OF TRANSPORTATION
Caltrans
LANDSCAPE

LAST REVISION 00-00-00 DATE PLOTTED => 02-AUG-2010 TIME PLOTTED => 15:56

Dist	COUNTY	ROUTE	KILOMETER POST TOTAL PROJECT	SHEET No.	TOTAL SHEETS
03	Sut	99	T49.2/R51.8	58	88

Caltrans Metric

Jeffrey L. Pietrzak 7-12-10
LICENSED LANDSCAPE ARCHITECT

7-26-10
PLANS APPROVAL DATE

LICENSED LANDSCAPE ARCHITECT JEFFREY L. PIETRZAK No. 4457 Signature 12-31-11 Renewal Date 5-1-10 Date STATE OF CALIFORNIA

THE STATE OF CALIFORNIA OR ITS OFFICERS OR AGENTS SHALL NOT BE RESPONSIBLE FOR THE ACCURACY OR COMPLETENESS OF ELECTRONIC COPIES OF THIS PLAN SHEET.

SUBTOTALS PER VALVE ON LATERAL SUPPLY SIDE OF CONTROL VALVE

DESCRIPTION			UNIT	VALVE OR ASSEMBLY NUMBER																							SUBTOTALS	UNIT	DESCRIPTION		
				A3-1	A3-2	A3-3	A3-4	A3-5	A3-6	A3-7	A3-8	A3-9	A3-10	A3-11	A3-12	A3-13	A3-14	A3-15	A3-16	A3-17	A3-18	A3-19	A3-20	A3-21	A3-22	A3-23	A3-24					
PLASTIC PIPE SUPPLY LINE	PR 200	20 mm	m	125	120	118	62	70	80	28	54	30	14	22	25	55	175	24	19	100	25	45	140	28	28	72	30	1 489	m	20 mm	PR 200	PLASTIC PIPE SUPPLY LINE
		25 mm	m	-	-	10	45	42	10	-	26	76	14	22	14	180	-	14	14	20	14	45	-	28	28	-	22	624	m	25 mm		
		32 mm	m	-	-	-	44	53	10	-	108	30	14	32	14	-	-	14	14	120	14	55	-	28	78	-	35	663	m	32 mm		
		40 mm	m	-	-	204	-	4	-	-	-	36	14	32	14	-	-	14	14	-	14	15	-	28	20	-	90	499	m	40 mm		
		50 mm	m	-	-	-	15	3	-	262	-	44	40	-	40	-	-	38	74	-	50	25	360	37	55	202	-	1 245	m	50 mm		
		65 mm	m	-	-	-	-	-	-	-	-	-	40	-	80	-	-	110	-	-	-	-	-	-	5	-	-	235	m	65 mm		
		75 mm	m	-	-	-	-	-	-	-	-	18	75	-	-	-	-	-	-	-	-	-	-	15	-	-	-	108	m	75 mm		
	PR 315																														PR 315	
GSP																															GSP	
DIP																															DIP	
SPRINKLER TYPE		A-8	EA	-	-	-	-	-	-	-	-	13	15	-	9	-	-	10	7	-	7	-	-	12	10	-	-	83	EA	A-8		SPRINKLER TYPE
		A-7	EA	-	-	-	-	-	-	-	-	-	-	10	-	-	-	-	-	-	-	16	-	-	-	-	-	26	EA	A-7		
		A-6	EA	-	-	-	-	-	-	-	13	-	-	-	-	9	-	-	-	15	-	-	-	-	-	-	-	37	EA	A-6		
		A-5	EA	-	-	-	21	19	9	-	-	-	-	-	-	-	-	-	-	-	-	-	-	-	-	-	15	64	EA	A-5		
		B-4	EA	2	-	-	-	-	-	-	-	-	-	-	-	-	-	-	-	-	-	-	-	-	-	-	-	2	EA	B-4		
		B-2	EA	-	-	-	-	-	-	-	-	-	-	-	-	-	-	-	-	-	-	-	-	-	-	-	-	-	EA	B-2		
		B-1	EA	-	-	-	-	-	-	-	-	-	-	-	-	-	-	-	-	-	-	-	-	-	-	-	-	-	EA	B-1		
		C-2	EA	-	6	37	-	-	-	-	-	-	-	-	-	-	-	-	-	-	-	-	-	-	-	22	-	65	EA	C-2		
		C-1	EA	-	-	-	-	-	-	8	-	-	-	-	-	-	6	-	-	-	-	-	12	-	-	-	-	26	EA	C-1		

DESCRIPTION			UNIT	VALVE OR ASSEMBLY NUMBER																SUBTOTALS	UNIT	DESCRIPTION		
				A4-1	A4-2	A4-3	A4-4	A4-5	A4-6	A4-7	A4-8	A4-9	A4-10	A4-11	A4-12	A4-13	A4-14	A4-15	A4-16					
PLASTIC PIPE SUPPLY LINE	PR 200	20 mm	m	28	29	18	210	19	108	22	339	14	14	28	28	245	28	28	22	1 180	m	20 mm	PR 200	PLASTIC PIPE SUPPLY LINE
		25 mm	m	84	21	14	-	14	22	22	-	14	14	28	28	-	14	14	22	311	m	25 mm		
		32 mm	m	-	33	10	-	10	84	15	-	14	14	28	28	-	14	14	32	296	m	32 mm		
		40 mm	m	-	65	80	-	73	-	-	-	14	14	20	18	-	14	14	-	312	m	40 mm		
		50 mm	m	-	-	-	-	-	-	-	340	39	39	12	11	-	50	-	190	681	m	50 mm		
		65 mm	m	-	-	-	-	-	-	-	-	53	44	15	5	-	71	-	-	188	m	65 mm		
		75 mm	m	-	-	-	-	-	-	-	-	106	145	-	-	-	-	210	-	461	m	75 mm		
	PR 315																						PR 315	
GSP																							GSP	
DIP																							DIP	
SPRINKLER TYPE		A-8	EA	-	-	4	-	4	-	-	-	13	15	9	9	-	9	15	-	78	EA	A-8		SPRINKLER TYPE
		A-7	EA	3	-	-	-	-	-	5	-	-	-	-	-	-	-	-	9	17	EA	A-7		
		A-6	EA	-	-	-	-	-	15	-	-	-	-	-	-	-	-	-	-	15	EA	A-6		
		A-5	EA	-	13	-	-	-	-	-	-	-	-	-	-	-	-	-	-	13	EA	A-5		
		B-4	EA	-	-	-	-	-	-	-	-	-	-	-	-	-	-	-	-	-	EA	B-4		
		B-2	EA	-	-	-	-	-	-	-	-	-	-	-	-	-	-	-	-	-	EA	B-2		
		B-1	EA	-	-	-	-	-	-	-	-	-	-	-	-	-	-	-	-	-	EA	B-1		
		C-2	EA	-	-	-	-	-	-	-	-	-	-	-	-	-	-	-	-	-	EA	C-2		
		C-1	EA	-	-	-	10	-	-	-	21	-	-	-	-	9	-	-	-	40	EA	C-1		

IRRIGATION QUANTITIES IQ-2

STATE OF CALIFORNIA - DEPARTMENT OF TRANSPORTATION
Caltrans
LANDSCAPE

SENIOR LANDSCAPE ARCHITECT: K. MURRAY
CALCULATED-DESIGNED BY: JEFFREY L. PIETRZAK
CHECKED BY: T. CHRIS JOHNSON
REVISED BY: JLP
DATE REVISED: 7/1/10

LAST REVISION 00-00-00 | DATE PLOTTED => 02-AUG-2010 | TIME PLOTTED => 15:56

Dist	COUNTY	ROUTE	KILOMETER POST TOTAL PROJECT	SHEET No.	TOTAL SHEETS
03	Sut	99	T49.2/R51.8	59	88

Caltrans Metric

Jeffrey L. Pietrzak 7-12-10
LICENSED LANDSCAPE ARCHITECT

7-26-10
PLANS APPROVAL DATE

LICENSED LANDSCAPE ARCHITECT JEFFREY L. PIETRZAK No. 4457 Signature 12-31-11 Renewal Date 5-1-10 Date STATE OF CALIFORNIA

THE STATE OF CALIFORNIA OR ITS OFFICERS OR AGENTS SHALL NOT BE RESPONSIBLE FOR THE ACCURACY OR COMPLETENESS OF ELECTRONIC COPIES OF THIS PLAN SHEET.

SUBTOTALS PER VALVE ON LATERAL SUPPLY SIDE OF CONTROL VALVE

DESCRIPTION			UNIT	VALVE OR ASSEMBLY NUMBER											SUBTOTALS	UNIT	DESCRIPTION		
				A5-1	A5-2	A5-3	A5-4	A5-5	A5-6	A5-7	A5-8	A5-9	A5-10	A5-11					
PLASTIC PIPE SUPPLY LINE	PR 200	20 mm	m	27	14	170	14	209	57	40	22	22	24	-	599	m	20 mm	PR 200	PLASTIC PIPE SUPPLY LINE
		25 mm	m	20	14	-	31	-	43	14	22	22	7	6	179	m	25 mm		
		32 mm	m	35	14	-	45	-	66	14	33	33	-	29	269	m	32 mm		
		40 mm	m	28	14	-	14	-	28	14	33	33	13	7	184	m	40 mm		
		50 mm	m	70	78	406	36	370	67	38	220	225	7	-	1 517	m	50 mm		
		65 mm	m	82	-	-	-	-	31	38	-	-	-	13	164	m	65 mm		
		75 mm	m	94	240	-	-	-	2	16	-	-	-	4	356	m	75 mm		
GSP		20 mm	m	-	-	-	-	-	-	-	-	-	57	26	83	m	20 mm	GSP	
		25 mm	m	-	-	-	-	-	-	-	-	-	19	19	38	m	25 mm		
		32 mm	m	-	-	-	-	-	-	-	-	-	34	5	39	m	32 mm		
		40 mm	m	-	-	-	-	-	-	-	-	-	8	13	21	m	40 mm		
		50 mm	m	-	-	-	-	-	-	-	-	-	-	38	38	m	50 mm		
		65 mm	m	-	-	-	-	-	-	-	-	-	-	8	8	m	65 mm		
		75 mm	m	-	-	-	-	-	-	-	-	-	-	-	-	m	75 mm		
DIP																		DIP	
SPRINKLER TYPE		A-8	EA	-	15	-	7	-	-	12	-	-	-	13	47	EA	A-8	SPRINKLER TYPE	
		A-7	EA	-	-	-	-	-	-	-	14	11	-	-	25	EA	A-7		
		A-6	EA	-	-	-	-	-	-	-	-	-	-	-	-	EA	A-6		
		A-5	EA	43	-	-	-	-	43	-	-	-	21	-	107	EA	A-5		
		B-4	EA	-	-	-	-	-	-	-	-	-	-	-	-	EA	B-4		
		B-2	EA	-	-	-	-	-	-	-	-	-	-	-	-	EA	B-2		
		B-1	EA	-	-	-	-	-	-	-	-	-	-	-	-	EA	B-1		
		C-2	EA	-	-	16	-	-	-	-	-	-	-	-	16	EA	C-2		
		C-1	EA	-	-	-	-	18	-	-	-	-	-	-	18	EA	C-1		

DESCRIPTION			UNIT	VALVE OR ASSEMBLY NUMBER											SUBTOTALS	UNIT	DESCRIPTION		
				A6-1	A6-2	A6-3	A6-4	A6-5	A6-6	A6-7	A6-8	A6-9	A6-10	A6-11					
PLASTIC PIPE SUPPLY LINE	PR 200	20 mm	m	14	58	28	51	14	140	160	45	21	130	195	856	m	20 mm	PR 200	PLASTIC PIPE SUPPLY LINE
		25 mm	m	14	42	20	27	14	36	150	30	21	27	-	381	m	25 mm		
		32 mm	m	14	47	14	60	14	-	-	104	33	118	-	404	m	32 mm		
		40 mm	m	14	28	14	43	14	-	-	31	95	-	-	239	m	40 mm		
		50 mm	m	39	53	40	124	39	-	-	63	62	-	-	420	m	50 mm		
		65 mm	m	39	14	15	-	39	-	-	16	-	-	-	123	m	65 mm		
		75 mm	m	32	-	-	-	164	-	-	-	-	-	-	196	m	75 mm		
	PR 315																	PR 315	PLASTIC PIPE SUPPLY LINE
GSP																		GSP	
DIP																		DIP	
SPRINKLER TYPE		A-8	EA	11	-	10	-	15	-	-	-	-	-	-	36	EA	A-8	SPRINKLER TYPE	
		A-7	EA	-	-	-	-	-	-	-	22	14	-	-	36	EA	A-7		
		A-6	EA	-	-	-	29	-	-	-	-	-	13	-	42	EA	A-6		
		A-5	EA	-	35	-	-	-	-	-	-	-	-	-	35	EA	A-5		
		B-4	EA	-	-	-	-	-	-	-	-	-	-	-	-	EA	B-4		
		B-2	EA	-	-	-	-	-	-	-	-	-	-	-	-	EA	B-2		
		B-1	EA	-	-	-	-	-	-	-	-	-	-	-	-	EA	B-1		
		C-2	EA	-	-	-	-	-	7	-	-	-	-	10	17	EA	C-2		
		C-1	EA	-	-	-	-	-	-	11	-	-	-	-	11	EA	C-1		

IRRIGATION QUANTITIES IQ-3

JLP	7/1/10	JEFFREY L. PIETRZAK	T. CHRIS JOHNSON
REVISED BY	DATE REVISED	CALCULATED-DESIGNED BY	CHECKED BY

SENIOR LANDSCAPE ARCHITECT K. MURRAY

STATE OF CALIFORNIA - DEPARTMENT OF TRANSPORTATION
Caltrans
LANDSCAPE

LAST REVISION 00-00-00 DATE PLOTTED => 02-AUG-2010 TIME PLOTTED => 15:56

SUBTOTALS PER PLAN SHEET ON MAIN SUPPLY SIDE OF CONTROL VALVE

DESCRIPTION			UNIT	SHEET NUMBER IP-1	IP-2	IP-3	IP-4	IP-5	IP-6	IP-7	SUBTOTALS
WM		40 mm	EA	-	-	-	-	-	1	-	1
WM		50 mm	EA	-	-	1	1	-	-	-	2
BPA		50 mm	EA	-	-	1	1	-	1	-	3
BPA		ENCLOSURE	EA	-	1	-	-	-	-	-	1
BPA		BLANKET	EA	-	2	1	1	-	2	-	6
BOOSTER PUMP			EA	-	2	1	1	-	2	-	6
IRRIGATION CONTROLLER		12 STATION	EA	-	-	-	-	-	2	-	2
IRRIGATION CONTROLLER		16 STATION	EA	-	-	-	1	-	-	-	1
IRRIGATION CONTROLLER		24 STATION	EA	-	2	1	-	-	-	-	3
IRRIGATION CONTROLLER	CEC	SINGLE	EA	-	2	1	1	-	2	-	6
IRRIGATION CONTROLLER	CEC	DOUBLE									
VALVES AND ASSEMBLIES	RCVM	75 mm	EA	-	2	1	1	-	2	-	6
VALVES AND ASSEMBLIES	RCV	25 mm	EA	-	6	4	3	-	3	-	15
VALVES AND ASSEMBLIES	RCV	40 mm	EA	2	8	6	7	-	1	-	23
VALVES AND ASSEMBLIES	RCV	50 mm	EA	3	8	2	7	1	7	-	28
VALVES AND ASSEMBLIES	RCV	75 mm	EA	2	4	9	8	1	9	-	31
VALVES AND ASSEMBLIES	GV	75 mm	EA	-	1	1	1	-	-	-	3
VALVES AND ASSEMBLIES	BV	75 mm	EA	2	4	4	4	1	3	-	18
VALVES AND ASSEMBLIES	QCV	20 mm	EA	2	4	4	4	-	3	-	17
VALVES AND ASSEMBLIES	FS	75 mm	EA	-	2	1	1	-	2	-	6
VALVES AND ASSEMBLIES	WS	25 mm	EA	-	3	2	2	-	3	-	10
VALVES AND ASSEMBLIES	WS	40 mm	EA	-	2	2	0	-	-	-	4
VALVES AND ASSEMBLIES	WS	50 mm	EA	-	2	1	3	-	2	-	8
CONDUIT	CSP										
CONDUIT	WSP										
PLASTIC PIPE SUPPLY LINE	PR 200	20 mm	m	-	-	-	-	-	-	-	-
PLASTIC PIPE SUPPLY LINE	PR 200	25 mm	m	-	-	-	-	-	-	-	-
PLASTIC PIPE SUPPLY LINE	PR 200	32 mm	m	-	-	-	-	-	-	-	-
PLASTIC PIPE SUPPLY LINE	PR 200	40 mm	m	-	-	-	-	-	-	-	-
PLASTIC PIPE SUPPLY LINE	PR 200	50 mm	m	-	-	-	-	-	-	-	-
PLASTIC PIPE SUPPLY LINE	PR 200	65 mm	m	-	-	-	-	-	-	-	-
PLASTIC PIPE SUPPLY LINE	PR 200	75 mm	m	-	-	-	-	-	-	-	-
PLASTIC PIPE SUPPLY LINE	PR 200	100 mm	m	290	545	800	500	666	325	-	3 126
GSP		20 mm	m	-	-	-	-	-	-	-	-
GSP		25 mm	m	-	-	-	-	-	-	-	-
GSP		32 mm	m	-	-	-	-	-	-	-	-
GSP		40 mm	m	-	-	-	-	-	-	-	-
GSP		50 mm	m	-	-	-	-	-	-	-	-
GSP		65 mm	m	-	-	-	-	-	-	-	-
GSP		75 mm	m	-	-	-	-	19	-	-	-
GSP		100 mm	m	-	-	-	-	19	-	-	19
DIP											

TOTAL QUANTITIES

TOTALS	UNIT	DESCRIPTION		
1	EA	40 mm	WM	
2	EA	50 mm	WM	
3	EA	50 mm	BPA	
1	EA	ENCLOSURE	BPA	
6	EA	BLANKET	BPA	
6	EA	BOOSTER PUMP		
2	EA	12 STATION	IRRIGATION CONTROLLER	
1	EA	16 STATION	IRRIGATION CONTROLLER	
3	EA	24 STATION	IRRIGATION CONTROLLER	
6	EA	SINGLE	CEC	IRRIGATION CONTROLLER
		DOUBLE	CEC	IRRIGATION CONTROLLER
6	EA	75 mm	RCVM	VALVES AND ASSEMBLIES
15	EA	25 mm	RCV	VALVES AND ASSEMBLIES
21	EA	40 mm	RCV	VALVES AND ASSEMBLIES
27	EA	50 mm	RCV	VALVES AND ASSEMBLIES
31	EA	75 mm	RCV	VALVES AND ASSEMBLIES
3	EA	75 mm	GV	VALVES AND ASSEMBLIES
18	EA	75 mm	BV	VALVES AND ASSEMBLIES
17	EA	20 mm	QCV	VALVES AND ASSEMBLIES
6	EA	75 mm	FS	VALVES AND ASSEMBLIES
10	EA	25 mm	WS	VALVES AND ASSEMBLIES
4	EA	40 mm	WS	VALVES AND ASSEMBLIES
8	EA	50 mm	WS	VALVES AND ASSEMBLIES
			CSP	CONDUIT
			WSP	CONDUIT
6 296	m	20 mm	PR 200	PLASTIC PIPE SUPPLY LINE
2 303	m	25 mm	PR 200	PLASTIC PIPE SUPPLY LINE
2 845	m	32 mm	PR 200	PLASTIC PIPE SUPPLY LINE
1 801	m	40 mm	PR 200	PLASTIC PIPE SUPPLY LINE
5 010	m	50 mm	PR 200	PLASTIC PIPE SUPPLY LINE
1 010	m	65 mm	PR 200	PLASTIC PIPE SUPPLY LINE
1 588	m	75 mm	PR 200	PLASTIC PIPE SUPPLY LINE
3 126	m	100 mm	PR 200	PLASTIC PIPE SUPPLY LINE
83	m	20 mm		GSP
38	m	25 mm		GSP
39	m	32 mm		GSP
21	m	40 mm		GSP
38	m	50 mm		GSP
8	m	65 mm		GSP
	m	75 mm		GSP
19	m	100 mm		
				DIP
352	EA	A-8		SPRINKLER TYPE
160	EA	A-7		SPRINKLER TYPE
130	EA	A-6		SPRINKLER TYPE
294	EA	A-5		SPRINKLER TYPE
4	EA	B-4		SPRINKLER TYPE
69	EA	B-2		SPRINKLER TYPE
9	EA	B-1		SPRINKLER TYPE
174	EA	C-2		SPRINKLER TYPE
139	EA	C-1		SPRINKLER TYPE

Caltrans Metric

Dist	COUNTY	ROUTE	KILOMETER POST TOTAL PROJECT	SHEET No.	TOTAL SHEETS
03	Sut	99	T49.2/R51.8	60	88

Jeffrey L. Pietrzak 7-12-10
LICENSED LANDSCAPE ARCHITECT

7-26-10
PLANS APPROVAL DATE

LICENSED LANDSCAPE ARCHITECT JEFFREY L. PIETRZAK No. 4457 Signature 12-31-11 Renewal Date 5-1-10 Date STATE OF CALIFORNIA

THE STATE OF CALIFORNIA OR ITS OFFICERS OR AGENTS SHALL NOT BE RESPONSIBLE FOR THE ACCURACY OR COMPLETENESS OF ELECTRONIC COPIES OF THIS PLAN SHEET.

ABBREVIATIONS

BPA —backflow preventer assembly
BV —ball valve
CV —check valve
CEC —controller enclosure cabinet
CSP —corrugated steel pipe
DIP —ductile iron pipe
EA —each
ET —evapotranspiration gauge
FAU —filter assembly unit
FCV —flow control valve
FS —flow sensor
FV —flush valve
GSP —galvanized steel pipe
GV —gate valve
MCV —manual control valve
m —meter
mm —millimeter
PR —pressure rated
PRV —pressure reducing valve
PRLV —pressure relief valve
QCV —quick coupling valve
RCV —remote control valve
RCVM —remote control valve (master)
VAU —valve assembly unit
WM —water meter
WSP —welded steel pipe
WS wye strainer

IRRIGATION QUANTITIES IQ-4

STATE OF CALIFORNIA - DEPARTMENT OF TRANSPORTATION
Caltrans
LANDSCAPE

SENIOR LANDSCAPE ARCHITECT: K. MURRAY
CALCULATED-DESIGNED BY: JEFFREY L. PIETRZAK
CHECKED BY: T. CHRIS JOHNSON
REVISED BY: JLP
DATE REVISED: 7/1/10

LAST REVISION 00-00-00
DATE PLOTTED => 02-AUG-2010
TIME PLOTTED => 15:56

Dist	COUNTY	ROUTE	KILOMETER POST TOTAL PROJECT	SHEET No.	TOTAL SHEETS
03	Sut	99	T49.2/R51.8	61	88

REGISTERED ELECTRICAL ENGINEER — DATE 7-12-10

PLANS APPROVAL DATE 7-26-10

REGISTERED PROFESSIONAL ENGINEER — JASKARAN SINGH BOPARAI — No. E15056 — Exp. 12/31/11 — ELECTRICAL — STATE OF CALIFORNIA

THE STATE OF CALIFORNIA OR ITS OFFICERS OR AGENTS SHALL NOT BE RESPONSIBLE FOR THE ACCURACY OR COMPLETENESS OF ELECTRONIC COPIES OF THIS PLAN SHEET.

PROJECT NOTES: (THIS SHEET ONLY)

1. INSTALL IRRIGATION CONTROLLER ENCLOSURE CABINET, ICC 'A1'
2. INSTALL BOOSTER PUMP ELECTRICAL SYSTEM. FOR DETAILS, SEE SHEETS EE-1 AND EE-2.
3. INSTALL TYPE III-AR SERVICE EQUIPMENT ENCLOSURE No. 0318099R030890 SEE SERVICE WIRING DIAGRAM ON THIS SHEET.
4. INSTALL TYPE III-AR SERVICE EQUIPMENT ENCLOSURE No. 0318099R031100 SEE SERVICE WIRING DIAGRAM ON THIS SHEET.
5. RC EXISTING SERVICE EQUIPMENT ENCLOSURE AND FOUNDATION.
6. SD SOUTHEAST CORNER OF QUEENS Ave AND ROUTE 99.
7. EXISTING POLE MOUNTED 240 V SERVICE EQUIPMENT ENCLOSURE.
8. INSTALL IRRIGATION CONTROLLER ENCLOSURE CABINET, ICC 'A2'
9. PG&E TO ADD 3#1 AND SPLICE CONDUCTORS.
10. REPLACE 50 A 2 POLE MAIN CIRCUIT BREAKER INSIDE THE MAINTENANCE BUILDING WITH 30 A 2 POLE CIRCUIT BREAKER.

ABBREVIATION AND LEGEND:

PG&E - PACIFIC GAS AND ELECTRIC COMPANY
ICC - IRRIGATION CONTROLLER CABINET
M - PUMP MOTOR
□ - BOOSTER PUMP ELECTRICAL SYSTEM
(M) = METER SOCKET WITH MANUAL CIRCUIT CLOSING DEVICE
SN = SOLID NEUTRAL BUS

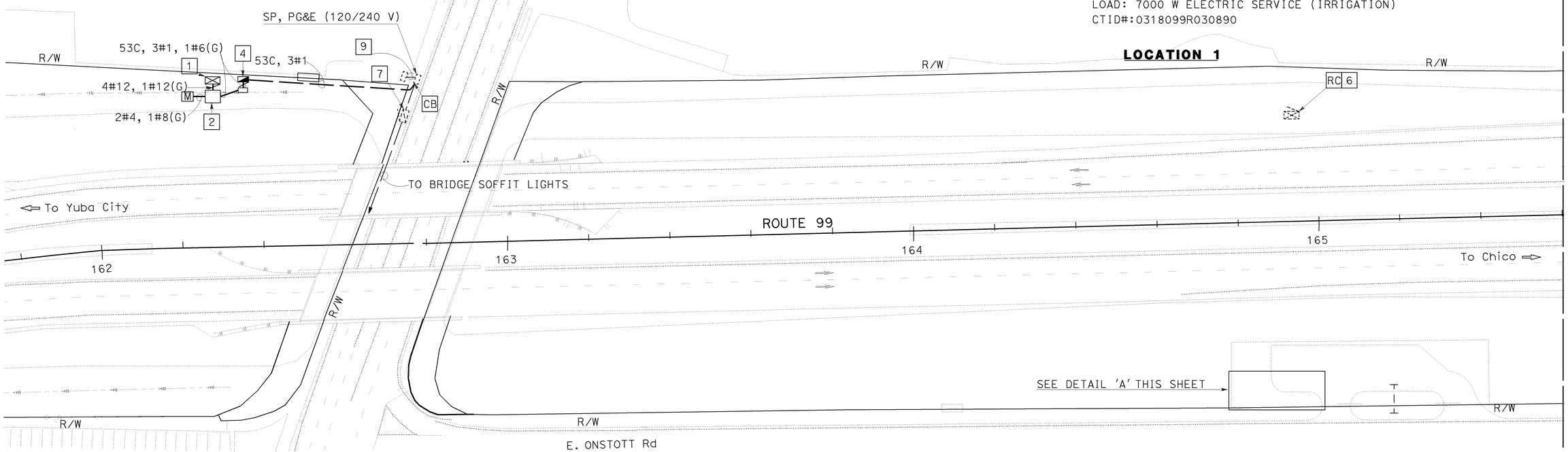

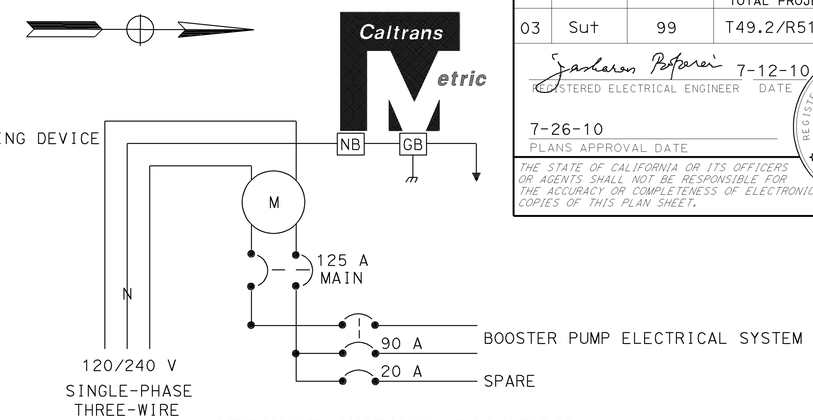

SERVICE WIRING DIAGRAM

LOAD: 7000 W ELECTRIC SERVICE (IRRIGATION)
CTID#:0318099R030890

LOCATION 1

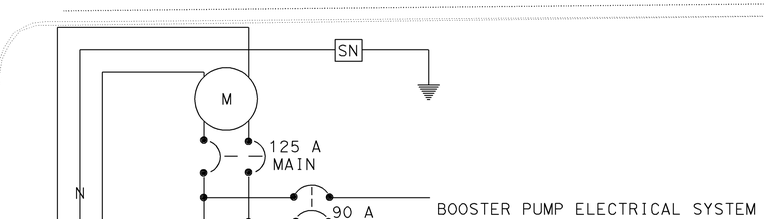

SERVICE WIRING DIAGRAM

LOAD: 7000 W ELECTRIC SERVICE (IRRIGATION)
250 W LIGHTING
2000 W MAINTENANCE BUILDING
CTID#:0318099R031100

LOCATION 2

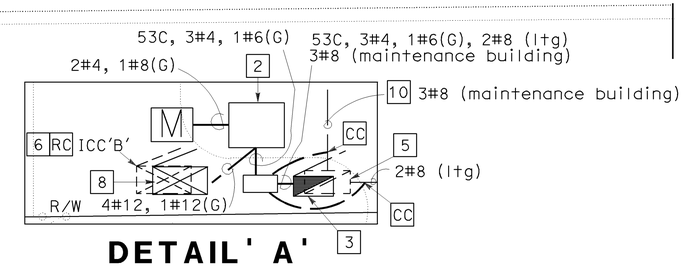

DETAIL' A'

ALL DIMENSIONS ARE IN METERS UNLESS OTHERWISE SHOWN.

THIS PLAN ACCURATE FOR ELECTRICAL WORK ONLY

IRRIGATION CONTROLLER ENCLOSURE CABINET ELECTRIC SERVICE (IRRIGATION)

SCALE 1:500

E-1

REVISED BY | DATE REVISED
OANH D. NGUYEN | JASKARAN SINGH BOPARAI
CALCULATED-DESIGNED BY | CHECKED BY
FUNCTIONAL SUPERVISOR | NELSON LEE

STATE OF CALIFORNIA - DEPARTMENT OF TRANSPORTATION
Caltrans ELECTRICAL DESIGN BRANCH (S1)

LAST REVISION 07-06-10 | DATE PLOTTED => 30-JUL-2010 | TIME PLOTTED => 08:48

Dist	COUNTY	ROUTE	KILOMETER POST TOTAL PROJECT	SHEET No.	TOTAL SHEETS
03	Sut	99	T49.2/R51.8	62	88

Jaskaran Boparai 7-12-10
REGISTERED ELECTRICAL ENGINEER DATE

7-26-10
PLANS APPROVAL DATE

REGISTERED PROFESSIONAL ENGINEER JASKARAN SINGH BOPARAI No. E15056 Exp. 12/31/11 ELECTRICAL STATE OF CALIFORNIA

THE STATE OF CALIFORNIA OR ITS OFFICERS OR AGENTS SHALL NOT BE RESPONSIBLE FOR THE ACCURACY OR COMPLETENESS OF ELECTRONIC COPIES OF THIS PLAN SHEET.

Caltrans Metric

PROJECT NOTES: (THIS SHEET ONLY)

1. IRRIGATION CONTROLLER ENCLOSURE CABINET, ICC 'A3'
2. BOOSTER PUMP ELECTRICAL SYSTEM. FOR DETAILS, SEE SHEET EE-1 AND EE-2.
3. SD SOUTHEAST CORNER OF QUEENS Ave AND ROUTE 99.
4. TYPE III-AR SERVICE EQUIPMENT ENCLOSURE CABINET No. 0318089R031190. SEE SERVICE WIRING DIAGRAM THIS SHEET.
5. RC Exist SERVICE EQUIPMENT ENCLOSURE.

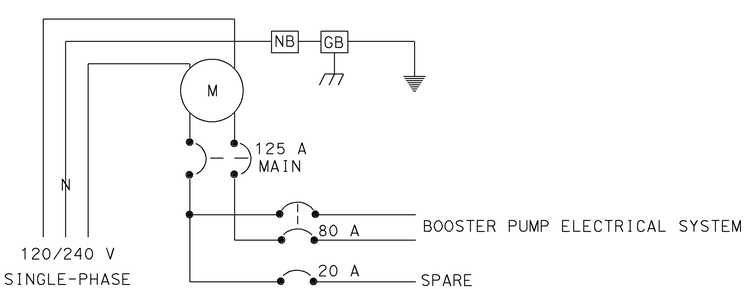

SERVICE WIRING DIAGRAM

LOAD: 6000 W ELECTRIC SERVICE (IRRIGATION)
CTID No. 0318089R031190

LOCATION 3

THIS PLAN ACCURATE FOR ELECTRICAL WORK ONLY

ALL DIMENSIONS ARE IN METERS UNLESS OTHERWISE SHOWN

ELECTRIC SERVICE (IRRIGATION)

SCALE 1:500

E-2

STATE OF CALIFORNIA - DEPARTMENT OF TRANSPORTATION
Caltrans ELECTRICAL DESIGN BRANCH (S1)

FUNCTIONAL SUPERVISOR: NELSON LEE
CALCULATED-DESIGNED BY: OANH D. NGUYEN
CHECKED BY: JASKARAN SINGH BOPARAI
REVISED BY / DATE REVISED

LAST REVISION DATE PLOTTED => 30-JUL-2010
07-06-10 TIME PLOTTED => 08:48

Dist	COUNTY	ROUTE	KILOMETER POST TOTAL PROJECT	SHEET No.	TOTAL SHEETS
03	Sut	99	T49.2/R51.8	63	88

Jaskaran Boparai 7-12-10
REGISTERED ELECTRICAL ENGINEER DATE

7-26-10
PLANS APPROVAL DATE

REGISTERED PROFESSIONAL ENGINEER JASKARAN SINGH BOPARAI No. E15056 Exp. 12/31/11 ELECTRICAL STATE OF CALIFORNIA

THE STATE OF CALIFORNIA OR ITS OFFICERS OR AGENTS SHALL NOT BE RESPONSIBLE FOR THE ACCURACY OR COMPLETENESS OF ELECTRONIC COPIES OF THIS PLAN SHEET.

Caltrans Metric

PROJECT NOTES: (THIS SHEET ONLY)

1. IRRIGATION CONTROLLER CABINET, ICC 'A4'
2. BOOSTER PUMP ELECTRICAL SYSTEM. FOR DETAILS, SEE SHEETS EE-1 AND EE-2.
3. TYPE III-AR SERVICE EQUIPMENT ENCLOSURE No. 0318099R031319. SEE SERVICE WIRING DIAGRAM ON THIS SHEET.
4. RC Exist ICC 'H' & 'F'.
5. SD SOUTHEAST CORNER OF QUEENS Ave AND ROUTE 99.
6. SD NORTH OF NORTHGATE DRIVE AND ROUTE 99.
7. TYPE PG&E RISER

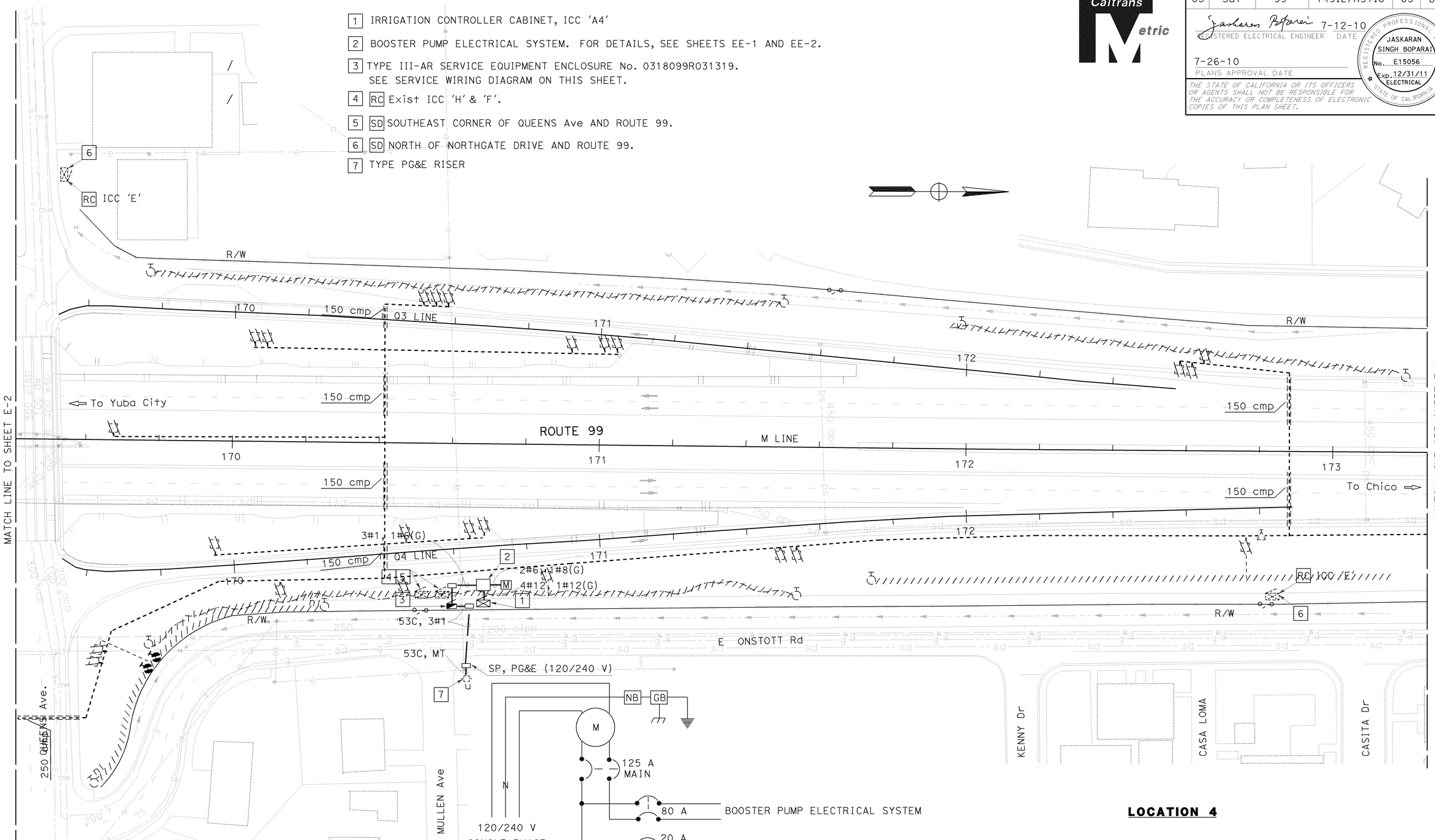

LOCATION 4

ALL DIMENSIONS ARE IN METERS UNLESS OTHERWISE SHOWN

SERVICE WIRING DIAGRAM

LOAD: 6000 W ELECTRIC SERVICE (IRRIGATION)
CTID No. 0318099R031319

THIS PLAN ACCURATE FOR ELECTRICAL WORK ONLY

ELECTRIC SERVICE (IRRIGATION)

SCALE 1:500

E-3

STATE OF CALIFORNIA - DEPARTMENT OF TRANSPORTATION
Caltrans ELECTRICAL DESIGN BRANCH (S1)

FUNCTIONAL SUPERVISOR: NELSON LEE
CALCULATED-DESIGNED BY: OHAN D NGUYEN
CHECKED BY: JASKARAN SINGH BOPARAI
REVISED BY / DATE REVISED

LAST REVISION DATE PLOTTED => 30-JUL-2010
07/06/10 TIME PLOTTED => 12:46

Dist	COUNTY	ROUTE	KILOMETER POST TOTAL PROJECT	SHEET No.	TOTAL SHEETS
03	Sut	99	T49.2/R51.8	64	88

Jaskaran Boparai 7-12-10
REGISTERED ELECTRICAL ENGINEER DATE

7-26-10
PLANS APPROVAL DATE

REGISTERED PROFESSIONAL ENGINEER JASKARAN SINGH BOPARAI No. E15056 Exp. 12/31/11 ELECTRICAL STATE OF CALIFORNIA

THE STATE OF CALIFORNIA OR ITS OFFICERS OR AGENTS SHALL NOT BE RESPONSIBLE FOR THE ACCURACY OR COMPLETENESS OF ELECTRONIC COPIES OF THIS PLAN SHEET.

Caltrans Metric

PROJECT NOTES: (THIS SHEET ONLY)

1. Exist TYPE III-AF SERVICE EQUIPMENT ENCLOSURE No. 0318099R031820. SEE MODIFIED SERVICE WIRING DIAGRAM ON THIS SHEET.
2. SD ROUTE 99 SOUTHBOUND BETWEEN EDEN WAY AND PORTOFINO DRIVE.
3. SD ROUTE 99 NORTHBOUND NORTH OF NORTHGATE DRIVE.

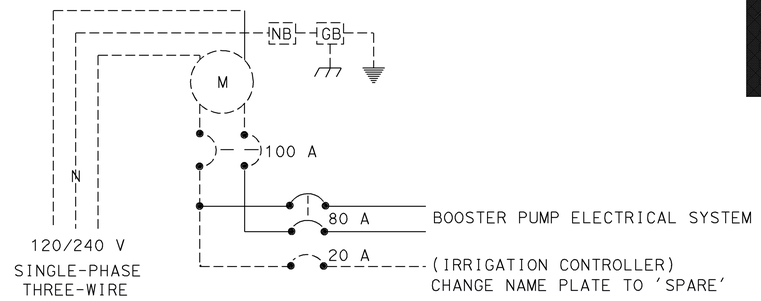

MODIFIED SERVICE WIRING DIAGRAM

LOAD: 6000 W Electric Service (Irrigation)
CTID No. 0318099R031820

LOCATION 5

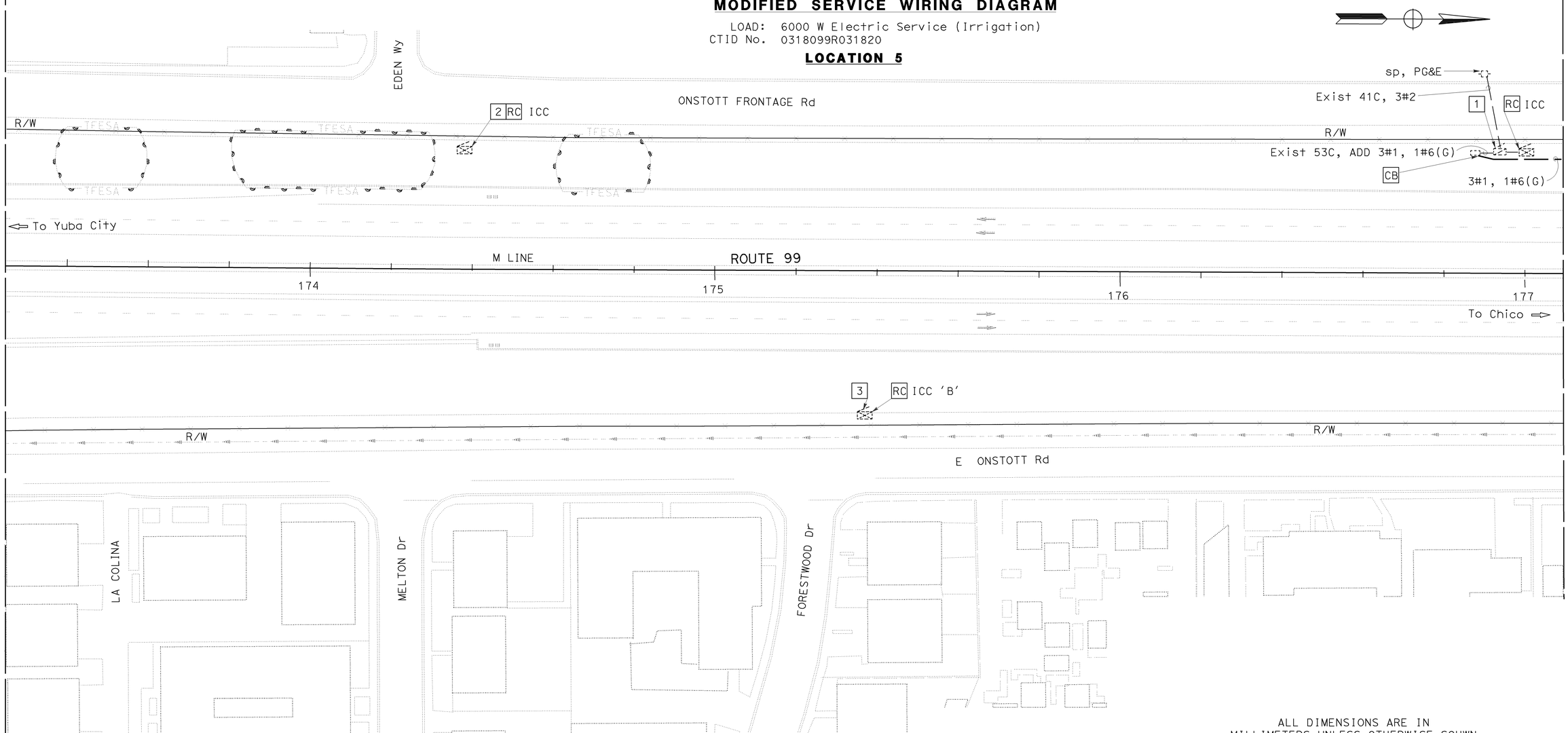

ALL DIMENSIONS ARE IN MILLIMETERS UNLESS OTHERWISE SOHWN

ELECTRIC SERVICE IRRIGATION

SCALE 1:500

E-4

THIS PLAN ACCURATE FOR ELECTRICAL WORK ONLY

7/10	7/10		
4/10	6/10	REVISED BY	DATE REVISED
OANH D. NGUYEN	JASKARAN BOPARAI	CALCULATED-DESIGNED BY	CHECKED BY
FUNCTIONAL SUPERVISOR	NELSON LEE		

STATE OF CALIFORNIA - DEPARTMENT OF TRANSPORTATION
Caltrans ELECTRICAL DESIGN BRANCH (S1)

LAST REVISION DATE PLOTTED => 30-JUL-2010
07-06-10 TIME PLOTTED => 08:48

Dist	COUNTY	ROUTE	KILOMETER POST TOTAL PROJECT	SHEET No.	TOTAL SHEETS
03	Sut	99	T49.2/R51.8	65	88

Jaskaran Boparai 7-12-10
REGISTERED CIVIL ENGINEER DATE

7-26-10
PLANS APPROVAL DATE

REGISTERED PROFESSIONAL ENGINEER JASKARAN SINGH BOPARAI No. E15056 Exp. 12/31/11 ELECTRICAL STATE OF CALIFORNIA

THE STATE OF CALIFORNIA OR ITS OFFICERS OR AGENTS SHALL NOT BE RESPONSIBLE FOR THE ACCURACY OR COMPLETENESS OF ELECTRONIC COPIES OF THIS PLAN SHEET.

Caltrans Metric

PROJECT NOTES: (THIS SHEET ONLY)

1. IRRIGATION CONTROLLER ENCLOSURE CABINET, ICC 'A6'
2. BOOSTER PUMP ELECTRICAL SYSTEM. FOR DETAILS, SEE SHEET EE-1 AND EE-2
3. IRRIGATION CONTROLLER ENCLOSURE CABINET, ICC 'A5'

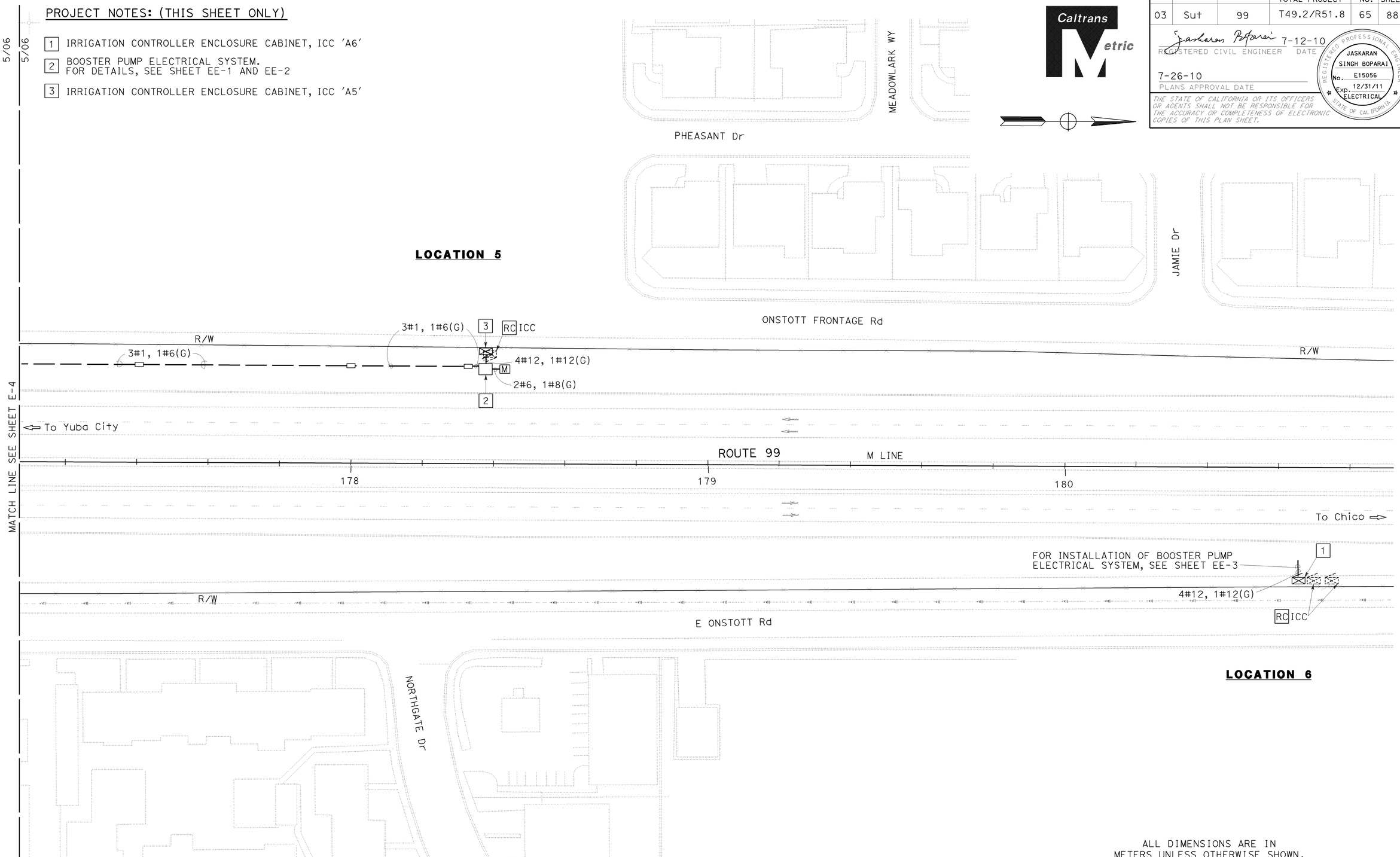

ALL DIMENSIONS ARE IN METERS UNLESS OTHERWISE SHOWN.

ELECTRIC SERVICE (IRRIGATION)

SCALE 1:500

E-5

THIS PLAN ACCURATE FOR ELECTRICAL WORK ONLY

CALCULATED-DESIGNED BY	BRIAN CHOW
CHECKED BY	JASKARAN S BOPARAI
REVISED BY	4/05
DATE REVISED	6/10
	7/10
FUNCTIONAL SUPERVISOR	NELSON LEE

STATE OF CALIFORNIA - DEPARTMENT OF TRANSPORTATION
Caltrans ELECTRICAL DESIGN BRANCH (S1)

LAST REVISION 07-06-10 | DATE PLOTTED => 30-JUL-2010 | TIME PLOTTED => 08:48

DIST.	COUNTY	ROUTE	KILOMETER POST TOTAL PROJECT	SHEET NO.	TOTAL SHEETS
03	Sut	99	T49.2/R51.8	66	88

Caltrans Metric

Catalino A. Enriquez 3-30-10
REGISTERED ENGINEER-ELECTRICAL DATE

7-26-10
PLANS APPROVAL DATE

REGISTERED PROFESSIONAL ENGINEER C.A. ENRIQUEZ No. 16944 Exp. 6-30-11 ELEC STATE OF CALIFORNIA

The State of California or its officers or agents shall not be responsible for the accuracy or completeness of electronic copies of this plan sheet.

Cal-Trans now has a web site! To get to the web site, go to: http://www.dot.ca.gov

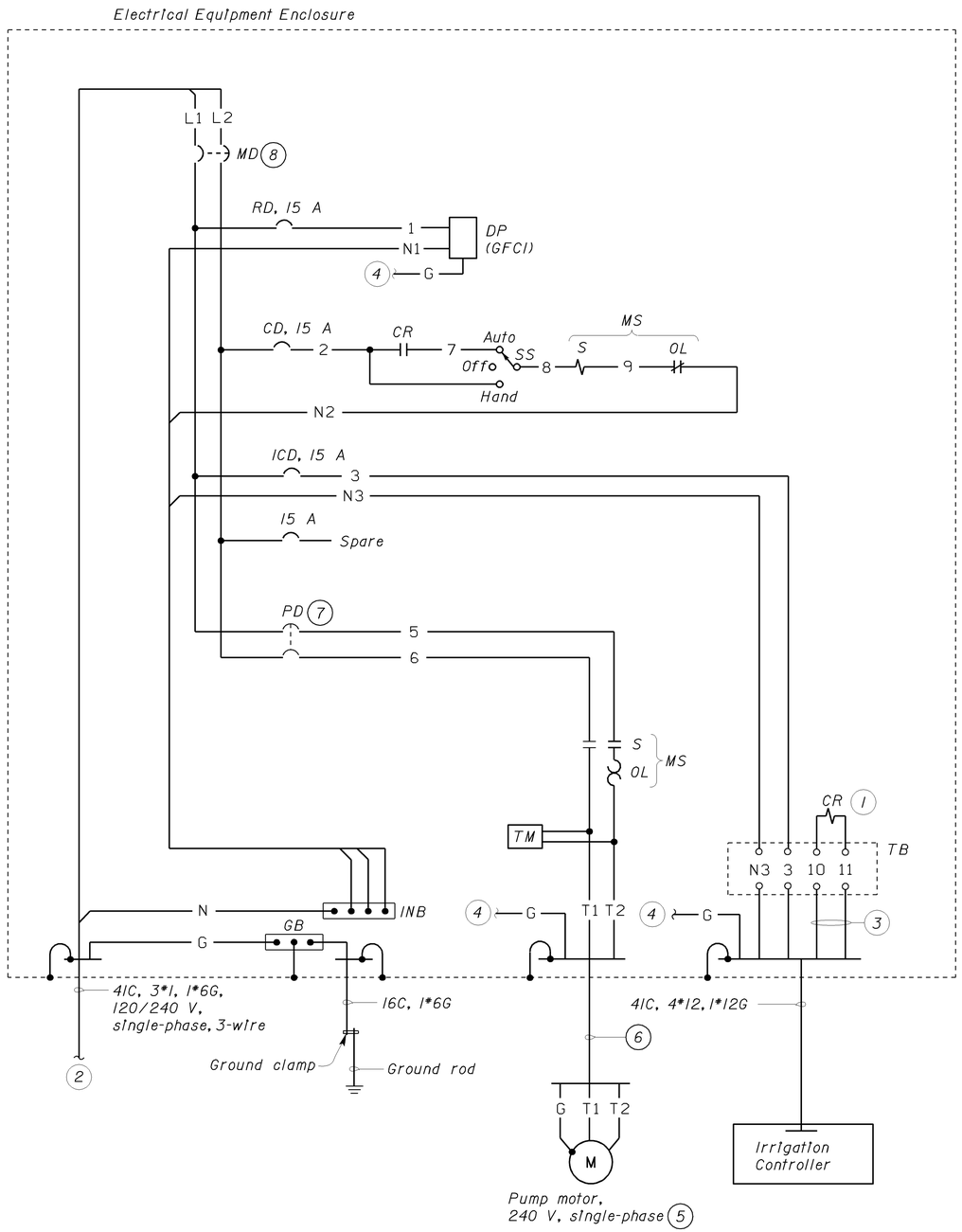

CONTROL SCHEMATIC

(TYPICAL FOR LOCATIONS NO. 1 THROUGH 5)

LEGEND

SYMBOL	DESCRIPTION
	CIRCUIT BREAKER, SINGLE POLE
	CIRCUIT BREAKER, DOUBLE POLE
	CONTACT, NORMALLY OPEN
	CONTACT, NORMALLY CLOSED
	SWITCH, SINGLE-POLE, 3-POSITION
	OPERATING COIL
	THERMAL OVERLOAD
(M)	MOTOR
	GROUNDING ELECTRODE
	UNDERGROUND CONDUIT

General Notes:

A. *For exact location of pump, electrical equipment enclosure and Irrigation controller, see Irrigation Plans and Mechanical Plan.*

B. *Pull boxes in between the electrical equipment enclosure and Irrigation controller are not shown. See Electrical "E" sheets.*

C. *For location number 6, see sheets EE-5 and EE-6.*

Notes:

(1) *Pump control relay, 24 Volts AC coil.*

(2) *To service equipment enclosure. See Electrical "E" sheets.*

(3) *To master valve/pump start terminals in the Irrigation controller.*

(4) *Connect to ground bar.*

(5) *5.6 kW for Locations Number 1 and 2; 3.73 kW for Locations Number 3, 4, and 5.*

(6) *4IC, 2*4, 1*8G for Location Number 1 and 2; 4IC, 2*6, 1*8G for Locations Number 3, 4, and 5.*

(7) *80-ampere circuit breaker disconnect for Locations Number 1 and 2; 70-ampere circuit breaker disconnect for Locations Number 3, 4, and 5.*

(8) *90-ampere circuit breaker for Locations Number 1 and 2; 80-ampere circuit breaker for Locations Number 3, 4, and 5.*

STANDARD NOTES

CC CONNECT NEW AND EXISTING CONDUIT. REMOVE EXISTING CONDUCTORS AND INSTALL CONDUCTORS AS INDICATED.

RC EQUIPMENT OR MATERIAL TO BE REMOVED AND BECOME PROPERTY OF THE CONTRACTOR.

ABBREVIATIONS

A	AMPERES
AC	ALTERNATING CURRENT
CD	CONTROL DISCONNECT
CR	CONTROL RELAY
CT	CONTROL TRANSFORMER
DP	DUPLEX PLUG RECEPTACLE
G	GROUND
GB	GROUND BAR
GFCI	GROUND FAULT CIRCUIT INTERRUPTER
ICD	IRRIGATION CONTROLLER DISCONNECT
IN	INCH
MD	MAIN DISCONNECT
MIN.	MINIMUM
MS	MOTOR STARTER
(N)	NEW
NB	NEUTRAL BAR
OL	OVERLOAD
PD	PUMP DISCONNECT
RD	RECEPTACLE DISCONNECT
S	STARTER COIL
SS	SELECTOR SWITCH
TB	TERMINAL BLOCK
TM	TIME METER
WP	WEATHERPROOF

ACCEPTABLE EQUIVALENT TRADE SIZE DESIGNATION FOR ELECTRICAL EQUIPMENT

METRIC SIZE	EQUIV. TRADE SIZE
50 mm x 75 mm x 40 mm	2" x 3" x 1 1/2" Box
100 mm x 100 mm x 40 mm	4" x 4" x 1 1/2" Box
41mm x 41mm Const. Channel	1 5/8" x 1 5/8" Const. Channel
40 mm O.C.	1 1/2-inch O.C.
19 mm Ground Rod	3/4-inch Ground Rod
3 meters	10 feet
1 mm Thick	0.040-inch Thick
16C	1/2-inch
21C	3/4-inch
27C	1-inch
35C	1 1/4-inch
41C	1 1/2-inch
53C	2-inch
63C	2 1/2-inch
78C	3-inch
91C	3 1/2-inch
103C	4-inch

DESIGN SUPERVISOR
DESIGN ENGINEER

	BY	CHECKED
DESIGN	C. A. Enriquez	Tommy F. Lee
DETAILS	C. A. Enriquez/TFL	Tommy F. Lee
QUANTITIES	C. A. Enriquez	Tommy F. Lee

STATE OF CALIFORNIA DEPARTMENT OF TRANSPORTATION

DIVISION OF ENGINEERING SERVICES
ELECTRICAL-MECHANICAL-WATER AND WASTEWATER DESIGN

BRIDGE NO.
KM POST T49.2/R51.8

BOOSTER PUMP ELECTRICAL SYSTEM

SCHEMATIC DIAGRAM

SHEET **EE-1**

DOS ELEC (10/98)
FILE => 31f500tu001.dgn
DATE PLOTTED => 30-JUL-2010 TIME PLOTTED => 08:48

ORIGINAL SCALE IN MILLIMETERS FOR REDUCED PLANS 0 10 20 30 40 50 60 70 80 90 100

UNIT 0381
PROJECT NO. & PHASE 0300030036I

DISREGARD PRINTS BEARING EARLIER REVISION DATES

REVISION DATES (PRELIMINARY STAGE ONLY) 10-25-04 11-17-04 11-23-04 7-12-05 5-17-06 3-30-10

SHEET OF

FILE => 31f500tu001.dgn

USERNAME => s128033 DATE PLOTTED => 30-JUL-2010 TIME PLOTTED => 08:48

V1=1

DIST.	COUNTY	ROUTE	KILOMETER POST TOTAL PROJECT	SHEET NO.	TOTAL SHEETS
03	Sut	99	T49.2/R51.8	67	88

Caltrans Metric

Catalino A. Enriquez 3-30-10
REGISTERED ENGINEER-ELECTRICAL DATE

7-26-10
PLANS APPROVAL DATE

REGISTERED PROFESSIONAL ENGINEER C.A. ENRIQUEZ No. 16944 Exp. 6-30-11 ELEC STATE OF CALIFORNIA

The State of California or its officers or agents shall not be responsible for the accuracy or completeness of electronic copies of this plan sheet.

Caltrans now has a web site! To get to the web site, go to: http://www.dot.ca.gov

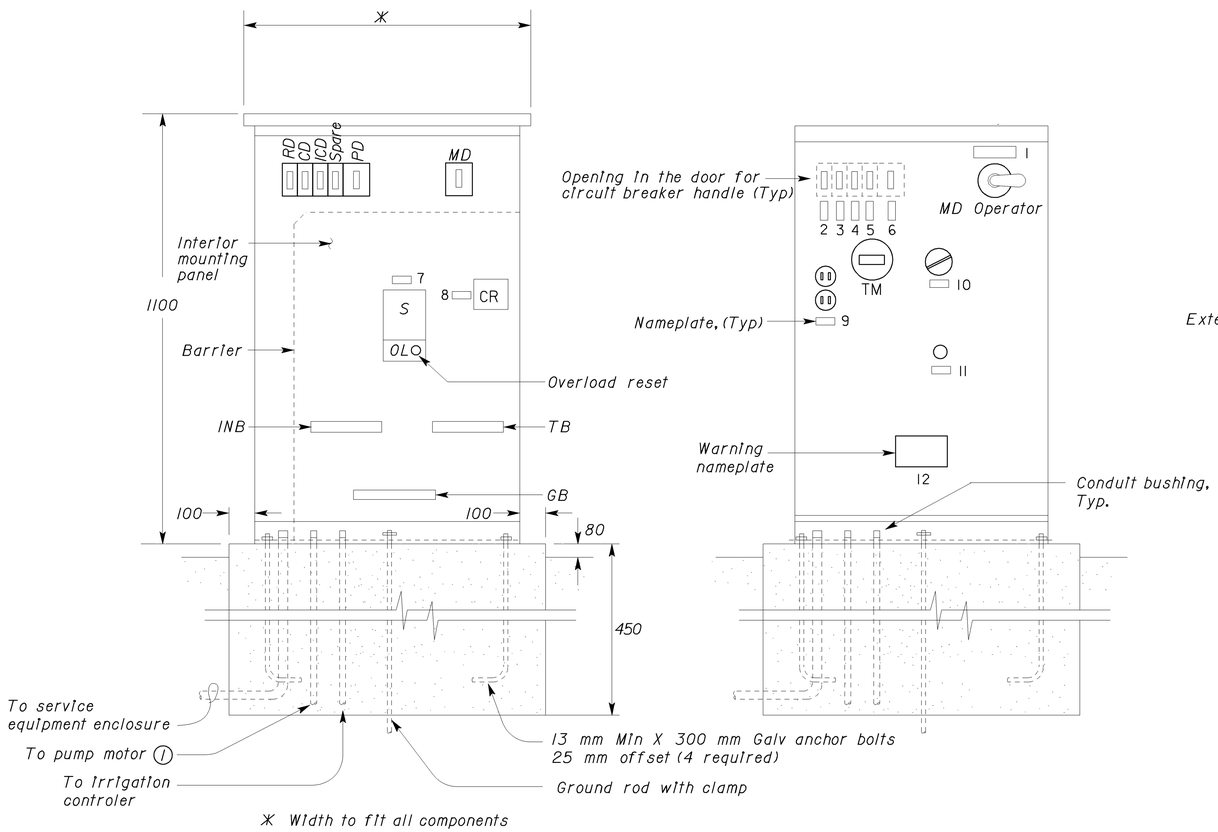

(INTERIOR AND EXTERIOR DOORS NOT SHOWN)

(EXTERIOR DOOR NOT SHOWN)

ELEVATION

NO SCALE

(TYPICAL FOR LOCATIONS NO. 1 THROUGH 5)

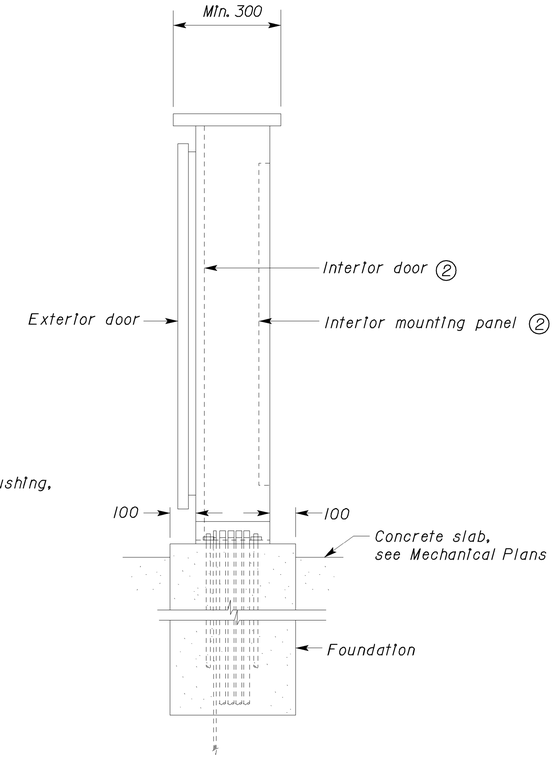

SIDE VIEW

No Scale

General notes:

A. *Dimensions of enclosure shown are approximate only.*

B. *For conduits and conductor sizes and quantity, see Electrical plans sheet EE-1.*

Notes:

(1) *For routing conduit to pump motor, see Mechanical plans.*

(2) *Mounted electrical components are not shown.*

NAMEPLATE SCHEDULE

ITEMS NO.	INSCRIPTION	LETTER HEIGHT (mm)
1	MAIN DISC.	11
2	RECEP.	7
3	CONTROL	7
4	IRRI. CONT.	7
5	SPARE	7
6	PUMP	7
7	MOTOR STARTER	7
8	CR	7
9	120 V DP	7
10	HAND-OFF-AUTO	7
11	OL RESET	7

WARNING NAMEPLATE SCHEDULE

ITEM NO.	INSCRIPTION *	LETTER HEIGHT (mm)
12	MAIN DISCONNECT DOES NOT DE-ENERGIZE CONTROL CIRCUIT	7

* WHITE LETTER AGAINST RED BACKGROUND

ALL DIMENSIONS SHOWN IN MILLIMETERS, EXCEPT AS NOTED

	BY	CHECKED
DESIGN	C.A. Enriquez	Tommy F. Lee
DETAILS	C.A. Enriquez/TFL	Tommy F. Lee
QUANTITIES	C.A. Enriquez	Tommy F. Lee

STATE OF CALIFORNIA DEPARTMENT OF TRANSPORTATION

DIVISION OF ENGINEERING SERVICES ELECTRICAL-MECHANICAL-WATER AND WASTEWATER DESIGN

BRIDGE NO.

KM POST T49.2/R51.8

BOOSTER PUMP ELECTRICAL SYSTEM

ELECTRICAL EQUIPMENT ENCLOSURE

SHEET **EE-2**

DOS ELEC (10/98) FILE => 31f500tu002.dgn DATE PLOTTED => 30-JUL-2010 TIME PLOTTED => 08:48

ORIGINAL SCALE IN MILLIMETERS FOR REDUCED PLANS 0 10 20 30 40 50 60 70 80 90 100

UNIT 0381 PROJECT NO. & PHASE 03000300361

DISREGARD PRINTS BEARING EARLIER REVISION DATES

REVISION DATES (PRELIMINARY STAGE ONLY) 10/25/04 11/17/04 11/29/04 12/27/04 1/12/05 5/17/06 3/30/10 SHEET OF

FILE => 31f500tu002.dgn

USERNAME => s128033 DATE PLOTTED => 30-JUL-2010 TIME PLOTTED => 08:48

VI=1

DIST.	COUNTY	ROUTE	KILOMETER POST TOTAL PROJECT	SHEET NO.	TOTAL SHEETS
03	Sut	99	T49.2/R51.8	68	88

Caltrans Metric

Catalino A. Enriquez 3-30-10
REGISTERED ENGINEER-ELECTRICAL DATE

7-26-10
PLANS APPROVAL DATE

REGISTERED PROFESSIONAL ENGINEER
C.A. ENRIQUEZ
No. 16944
Exp. 6-30-11
ELEC
STATE OF CALIFORNIA

The State of California or its officers or agents shall not be responsible for the accuracy or completeness of electronic copies of this plan sheet.

Caltrans now has a web site! To get to the web site, go to: http://www.dot.ca.gov

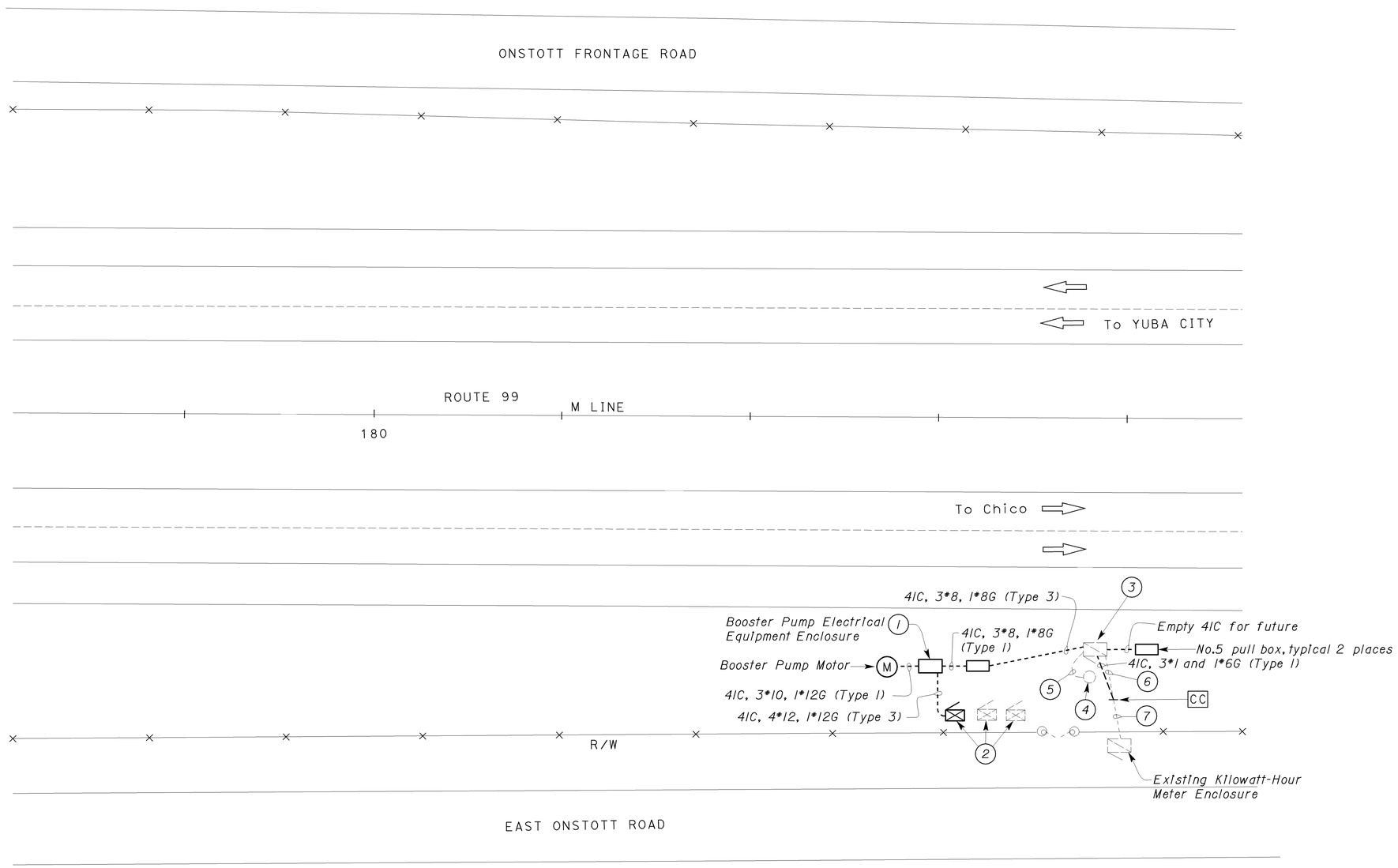

PLAN
1: 250

General Notes:

A. *Coordinate with respective utility company for all works regarding installation of modified Service Equipment Enclosure.*

B. *For exact location of pump and irrigation controller, see Irrigation Plans and Mechanical Plans.*

Notes:

1. *For installation details, see sheets EE-5 and EE-6.*
2. *See electrical plan E-5.*
3. *Replace existing Service Equipment Enclosure with modified Type III-D Service Equipment Enclosure. For details, see sheet EE-4.*
4. *Remove existing ground well.*
5. *Remove existing 16C, 1*8G.*
6. *RC 4IC, 3*8 and 1*8G.*
7. *Existing 4IC, 3*8, 1*8G. RC 3*8 and 1*8G. Install 3*1 and 1*6G in existing 4IC.*

THIS PLAN ACCURATE FOR ELECTRICAL WORK ONLY
ALL DIMENSIONS SHOWN IN MILLIMETERS, EXCEPT AS NOTED

	BY	CHECKED
DESIGN	C. A. Enriquez	Tommy F. Lee
DETAILS	C. A. Enriquez/TFL	Tommy F. Lee
QUANTITIES	C. A. Enriquez	Tommy F. Lee

STATE OF CALIFORNIA
DEPARTMENT OF TRANSPORTATION

DIVISION OF ENGINEERING SERVICES
ELECTRICAL-MECHANICAL-WATER AND WASTEWATER DESIGN

BRIDGE NO.
KM POST T49.2/R51.8

BOOSTER PUMP ELECTRICAL SYSTEM
ELECTRIC SERVICE - LOCATION NO. 6

SHEET **EE-3**

DOS ELEC (10/98)
FILE => 31f500tu003.dgn
DATE PLOTTED => 30-JUL-2010 TIME PLOTTED => 08:48

ORIGINAL SCALE IN MILLIMETERS FOR REDUCED PLANS 0 10 20 30 40 50 60 70 80 90 100

UNIT 0381
PROJECT NO. & PHASE 0300030036I

DISREGARD PRINTS BEARING EARLIER REVISION DATES
REVISION DATES (PRELIMINARY STAGE ONLY) 1/12/05 5/17/06 3/30/10
SHEET OF

FILE => 31f500tu003.dgn

USERNAME => s128033 DATE PLOTTED => 30-JUL-2010 TIME PLOTTED => 08:48

VI=1

DIST.	COUNTY	ROUTE	KILOMETER POST TOTAL PROJECT	SHEET NO.	TOTAL SHEETS
03	Sut	99	T49.2/R51.8	69	88

Caltrans Metric

Catalino A. Enriquez 3-30-10
REGISTERED ENGINEER-ELECTRICAL DATE

7-26-10
PLANS APPROVAL DATE

REGISTERED PROFESSIONAL ENGINEER C.A. ENRIQUEZ No. 16944 Exp. 6-30-11 ELEC STATE OF CALIFORNIA

The State of California or its officers or agents shall not be responsible for the accuracy or completeness of electronic copies of this plan sheet.

Caltrans now has a web site! To get to the web site, go to: http://www.dot.ca.gov

NAMEPLATE SCHEDULE

ITEMS NO.	INSCRIPTION	LETTER HEIGHT (mm)
1	SERVICE DISCONNECT	11
2	BOOSTER PUMP SYSTEM	7
3	SPARE	7

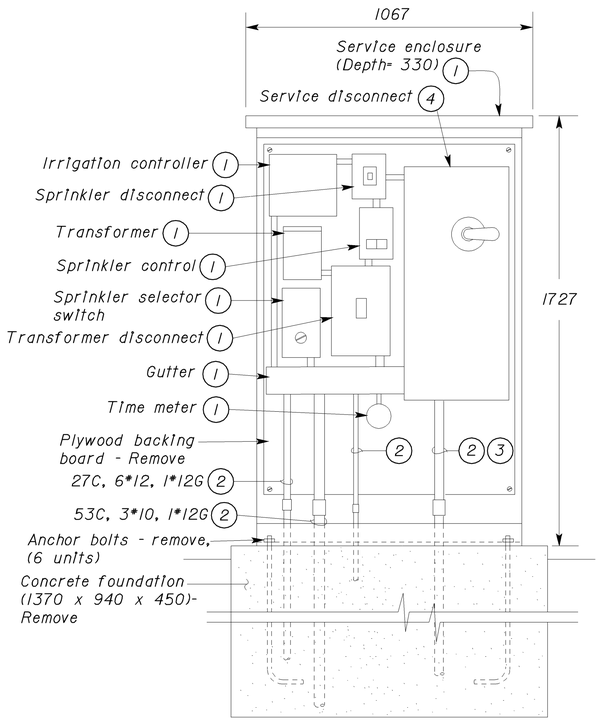

EXISTING

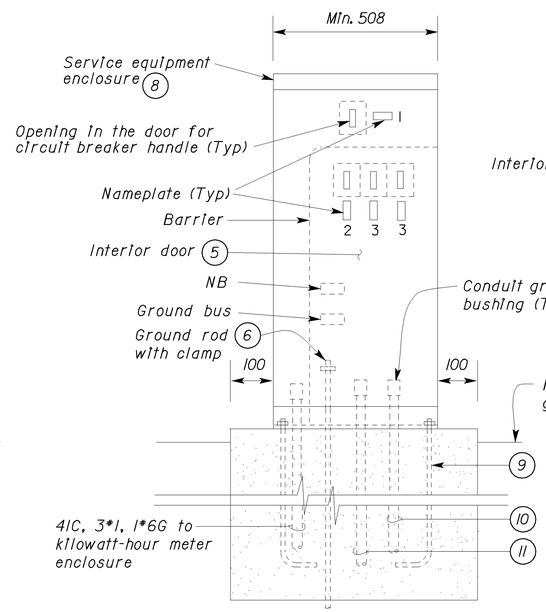

FRONT VIEW

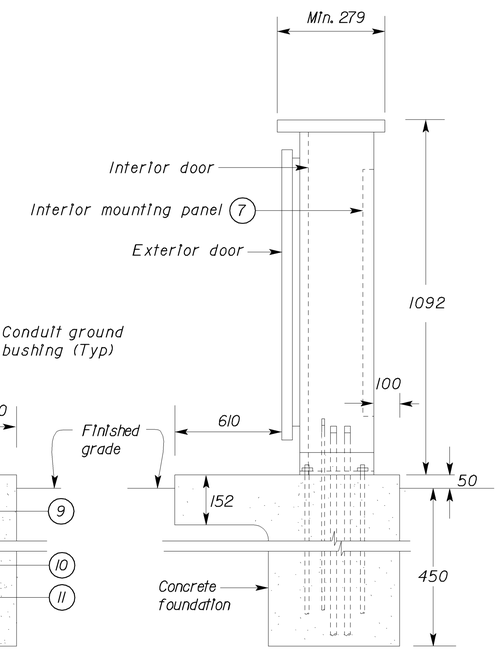

SIDE VIEW

MODIFIED

ELEVATION

NO SCALE

Notes:

1. Remove equipment, and associated conduit and conductors.
2. Remove conductors and conduit.
3. Coordinate with utility company prior to removal of conductors.
4. Coordinate with utility company prior to removal of disconnect. Remove service disconnect switch.
5. Exterior door not shown.
6. Bond ground rod to service enclosure, ground bushings, equipment grounding conductors and ground block with 1*6G.
7. Mounted electrical components are not shown.
8. Modified Type III-D service equipment enclosure without metering section. For circuit breaker sizes, see power distribution diagram on this sheet. Dimensions of enclosure shown are approximate only.
9. 13 mm Min. x 300 mm Galvanized anchor bolts, 25 mm offset (4 required).
10. Empty 4IC to pull box.
11. 4IC, 3*8, 1*8G to booster pump electrical equipment enclosure.

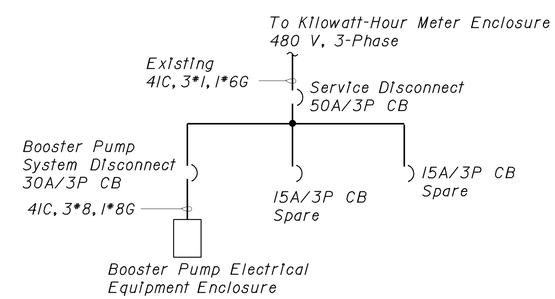

POWER DISTRIBUTION DIAGRAM

ALL DIMENSIONS SHOWN IN MILLIMETERS, EXCEPT AS NOTED

	BY	CHECKED
DESIGN	C. A. Enriquez	Tommy F. Lee
DETAILS	C. A. Enriquez/TFL	Tommy F. Lee
QUANTITIES	C. A. Enriquez	Tommy F. Lee

STATE OF CALIFORNIA DEPARTMENT OF TRANSPORTATION

DIVISION OF ENGINEERING SERVICES ELECTRICAL-MECHANICAL-WATER AND WASTEWATER DESIGN

BRIDGE NO.

KM POST T49.2/R51.8

BOOSTER PUMP ELECTRICAL SYSTEM

MODIFIED ELECTRIC SERVICE EQUIPMENT ENCLOSURE- LOCATION NO. 6

SHEET **EE-4**

DOS ELEC (10/98) FILE => 31f500tu004.dgn DATE PLOTTED => 30-JUL-2010 TIME PLOTTED => 08:48

ORIGINAL SCALE IN MILLIMETERS FOR REDUCED PLANS 0 10 20 30 40 50 60 70 80 90 100

UNIT 0381 PROJECT NO. & PHASE 03000300361

DISREGARD PRINTS BEARING EARLIER REVISION DATES

REVISION DATES (PRELIMINARY STAGE ONLY) 1/26/05 1/12/05 5/19/05 3/30/10

SHEET OF

FILE => 31f500tu004.dgn

USERNAME => s128033 DATE PLOTTED => 30-JUL-2010 TIME PLOTTED => 08:48

V1=1

DIST.	COUNTY	ROUTE	KILOMETER POST TOTAL PROJECT	SHEET NO.	TOTAL SHEETS
03	Sut	99	T49.2/R51.8	70	88

Caltrans Metric

Catalino A. Enriquez 3-30-10
REGISTERED ENGINEER-ELECTRICAL DATE

7-26-10
PLANS APPROVAL DATE

REGISTERED PROFESSIONAL ENGINEER C.A. ENRIQUEZ No. 16944 Exp. 6-30-11 ELEC STATE OF CALIFORNIA

The State of California or its officers or agents shall not be responsible for the accuracy or completeness of electronic copies of this plan sheet.

Caltrans now has a web site! To get to the web site, go to: http://www.dot.ca.gov

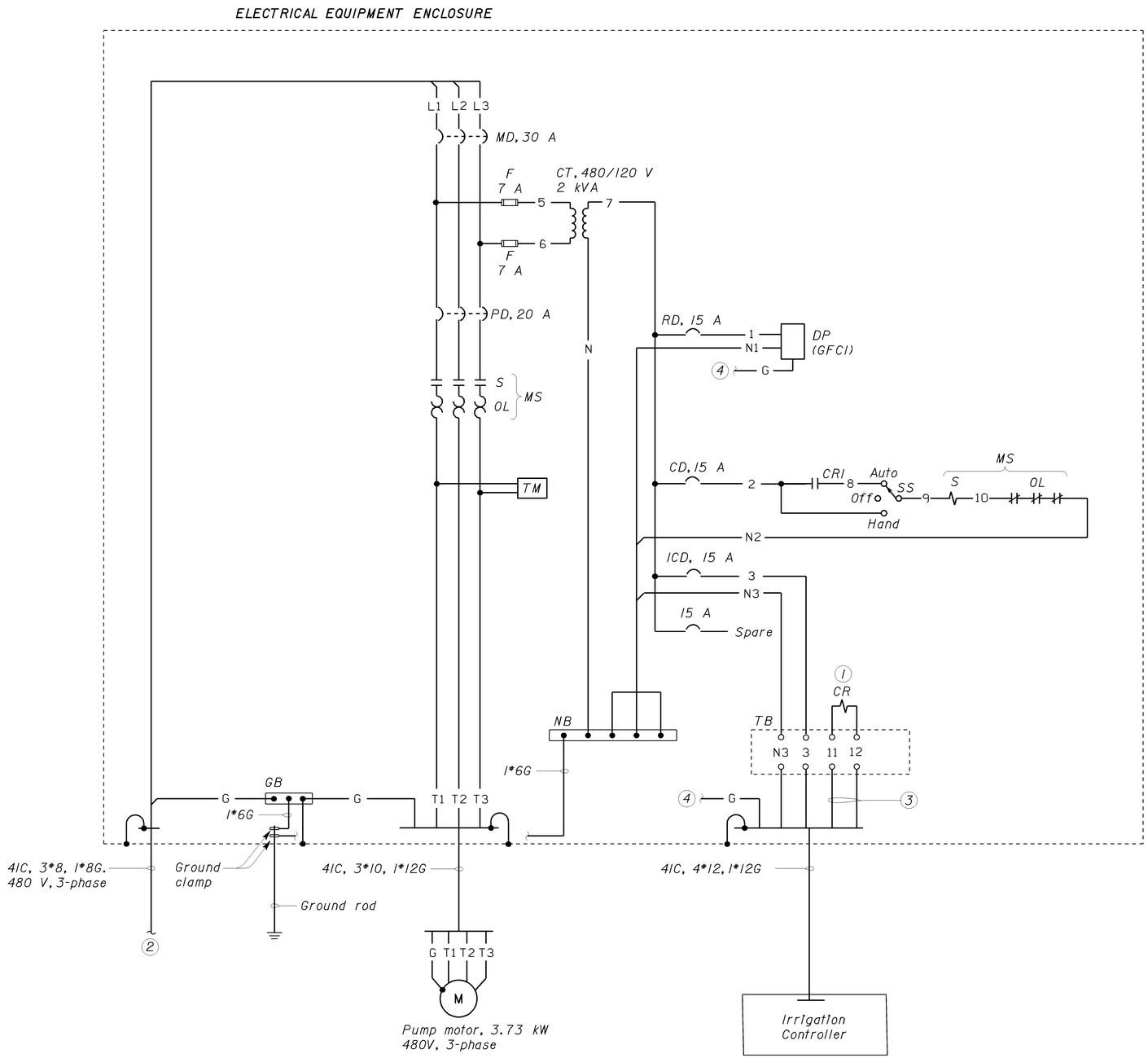

CONTROL SCHEMATIC

General Notes:

A. *For exact location of pump and irrigation controller, see Irrigation Plans and Mechanical Plan.*

B. *For Legend and Abbreviations, see sheet EE-1.*

Notes:

1. *Pump control relay, 24 volts AC coil.*
2. *To modified service equipment enclosure. See sheets EE-3 and EE-4*
3. *To master valve/pump start terminals in the irrigation controller.*
4. *Connect to ground bar.*

ALL DIMENSIONS SHOWN IN MILLIMETERS, EXCEPT AS NOTED

	BY	CHECKED
DESIGN	C. A. Enriquez	Tommy F. Lee
DETAILS	C. A. Enriquez	Tommy F. Lee
QUANTITIES	C. A. Enriquez	Tommy F. Lee

STATE OF CALIFORNIA DEPARTMENT OF TRANSPORTATION

DIVISION OF ENGINEERING SERVICES ELECTRICAL-MECHANICAL-WATER AND WASTEWATER DESIGN

BRIDGE NO.

KM POST T49.2/R51.8

BOOSTER PUMP ELECTRICAL SYSTEM

SCHEMATIC DIAGRAM - LOCATION NO. 6

SHEET **EE-5**

DOS ELEC (10/98)

FILE => 31f500tu005.dgn
DATE PLOTTED => 30-JUL-2010 TIME PLOTTED => 08:48

ORIGINAL SCALE IN MILLIMETERS FOR REDUCED PLANS 0 10 20 30 40 50 60 70 80 90 100

UNIT 0381
PROJECT NO. & PHASE 03000300361

DISREGARD PRINTS BEARING EARLIER REVISION DATES

REVISION DATES (PRELIMINARY STAGE ONLY) 10/25/04 11/17/04 11/29/04 1/4/05 1/12/05 5/17/06 SHEET OF

FILE => 31f500tu005.dgn

USERNAME => s128033 DATE PLOTTED => 30-JUL-2010 TIME PLOTTED => 08:48

VI=1

DIST.	COUNTY	ROUTE	KILOMETER POST TOTAL PROJECT	SHEET NO.	TOTAL SHEETS
03	Sut	99	T49.2/R51.8	71	88

Caltrans Metric

Catalino A. Enriquez 5-17-06
REGISTERED ENGINEER-ELECTRICAL DATE

7-26-10
PLANS APPROVAL DATE

REGISTERED PROFESSIONAL ENGINEER C.A. ENRIQUEZ No. 16944 Exp. 6-30-07 ELEC STATE OF CALIFORNIA

The State of California or its officers or agents shall not be responsible for the accuracy or completeness of electronic copies of this plan sheet.

Caltrans now has a web site! To get to the web site, go to: http://www.dot.ca.gov

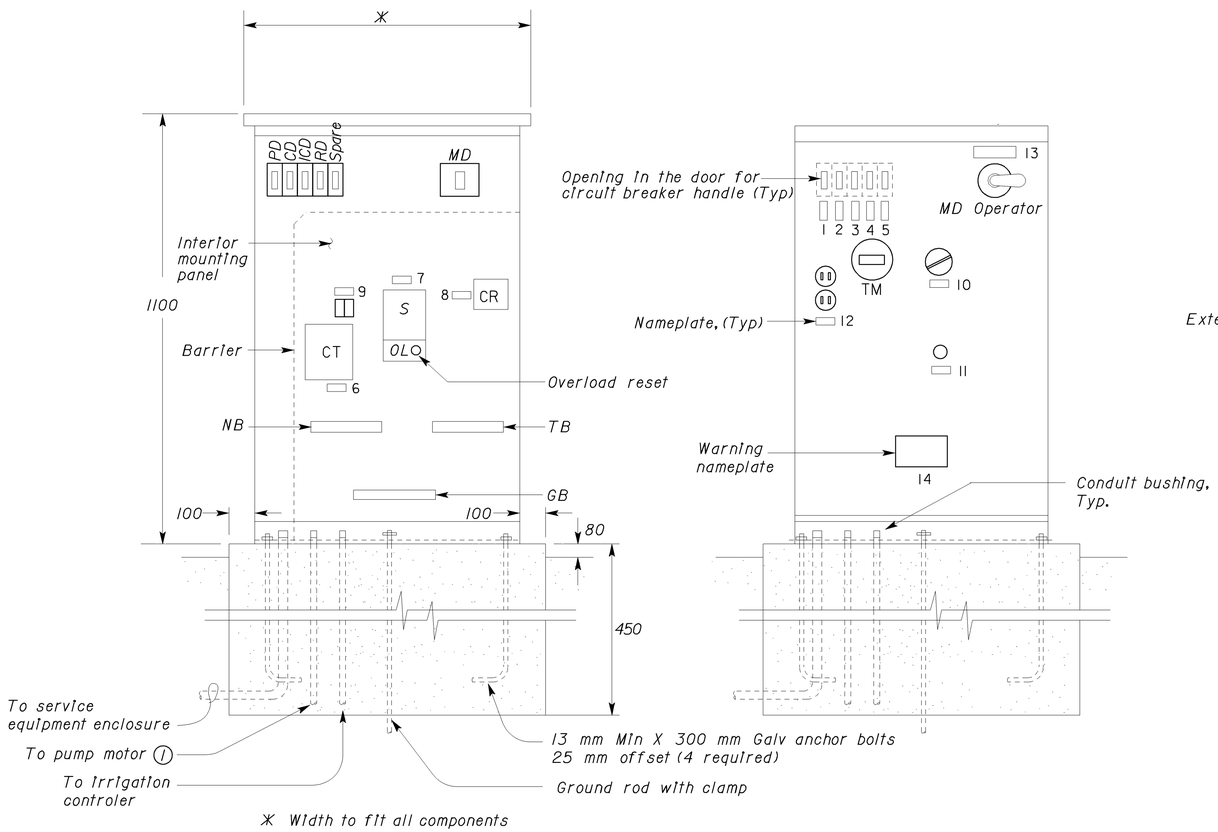

(INTERIOR AND EXTERIOR DOORS NOT SHOWN)

(EXTERIOR DOOR NOT SHOWN)

ELEVATION

NO SCALE

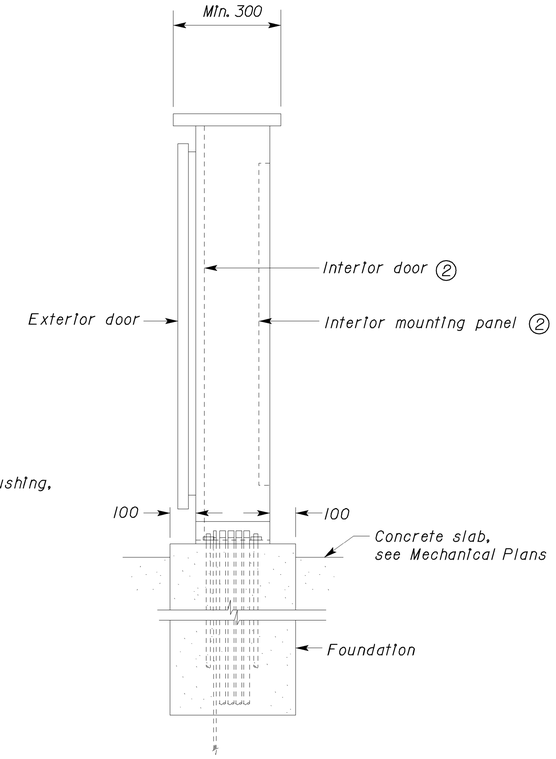

SIDE VIEW

No Scale

General notes:

A. *Dimensions of enclosure shown are approximate only.*

B. *For conduits and conductor sizes and quantity, see Electrical plans sheet EE-5.*

Notes:

(1) *For routing conduit to pump motor, see Mechanical plans.*

(2) *Mounted electrical components are not shown.*

NAMEPLATE SCHEDULE

ITEMS NO.	INSCRIPTION	LETTER HEIGHT (mm)
1	PUMP	11
2	CONTROL	7
3	IRRI. CONT.	7
4	RECEP.	7
5	SPARE	7
6	TRANSF	7
7	MOTOR STARTER	7
8	CR	7
9	FUSE	7
10	HAND-OFF-AUTO	7
11	OL RESET	7
12	120 V DP	7
13	MAIN	11

WARNING NAMEPLATE SCHEDULE

ITEM NO.	INSCRIPTION *	LETTER HEIGHT (mm)
14	MAIN DISCONNECT DOES NOT DE-ENERGIZE CONTROL CIRCUIT	7

* WHITE LETTER AGAINST RED BACKGROUND

ALL DIMENSIONS SHOWN IN MILLIMETERS, EXCEPT AS NOTED

DESIGN	BY C. A. Enriquez	CHECKED Tommy F. Lee	
DETAILS	BY C. A. Enriquez	CHECKED Tommy F. Lee	
QUANTITIES	BY C. A. Enriquez	CHECKED Tommy F. Lee	

STATE OF CALIFORNIA DEPARTMENT OF TRANSPORTATION

DIVISION OF ENGINEERING SERVICES
ELECTRICAL-MECHANICAL-WATER AND WASTEWATER DESIGN

BRIDGE NO.
KM POST T49.2/R51.8

BOOSTER PUMP ELECTRICAL SYSTEM

ELECTRICAL EQUIPMENT ENCLOSURE-LOCATION NO. 6

SHEET **EE-6**

DOS ELEC (10/98)
FILE => 31f500tu006.dgn
DATE PLOTTED => 30-JUL-2010 TIME PLOTTED => 08:48

ORIGINAL SCALE IN MILLIMETERS FOR REDUCED PLANS 0 10 20 30 40 50 60 70 80 90 100

UNIT 0381
PROJECT NO. & PHASE 03000300361

DISREGARD PRINTS BEARING EARLIER REVISION DATES 1/14/05 1/12/05 5/17/06

REVISION DATES (PRELIMINARY STAGE ONLY) SHEET OF

FILE => 31f500tu006.dgn

USERNAME => s128033 DATE PLOTTED => 30-JUL-2010 TIME PLOTTED => 08:48

VI=1

DIST.	COUNTY	ROUTE	KILOMETER POST TOTAL PROJECT	SHEET NO.	TOTAL SHEETS
03	Sut	99	T49.2/R51.8	72	88

Caltrans Metric

Michael R. White 04/21/2010
REGISTERED ENGINEER-MECHANICAL

7-26-10
PLANS APPROVAL DATE

REGISTERED PROFESSIONAL ENGINEER MICHAEL WHITE No. M29108 Exp. 6-30-10 MECH STATE OF CALIFORNIA

The State of California or its officers or agents shall not be responsible for the accuracy or completeness of electronic copies of this plan sheet.

Cal-Trans now has a web site! To get to the web site, go to: http://www.dot.ca.gov

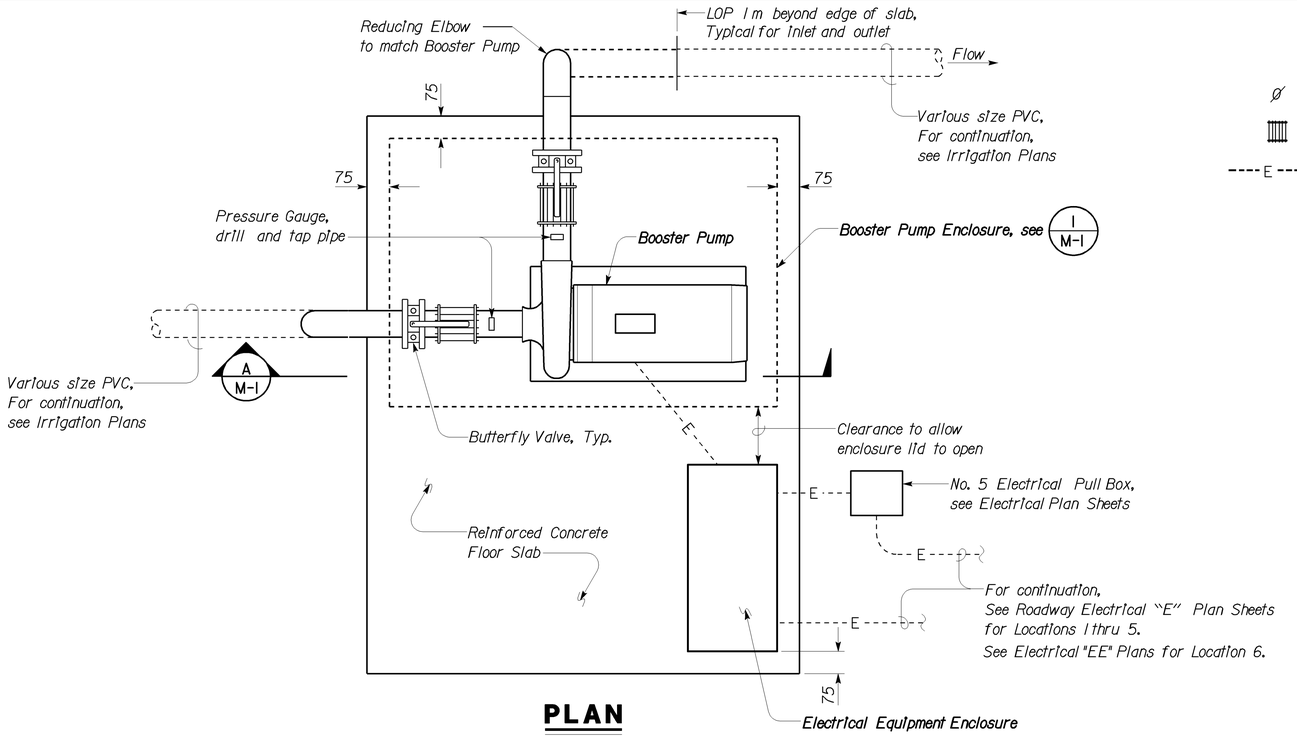

PLAN

1:10

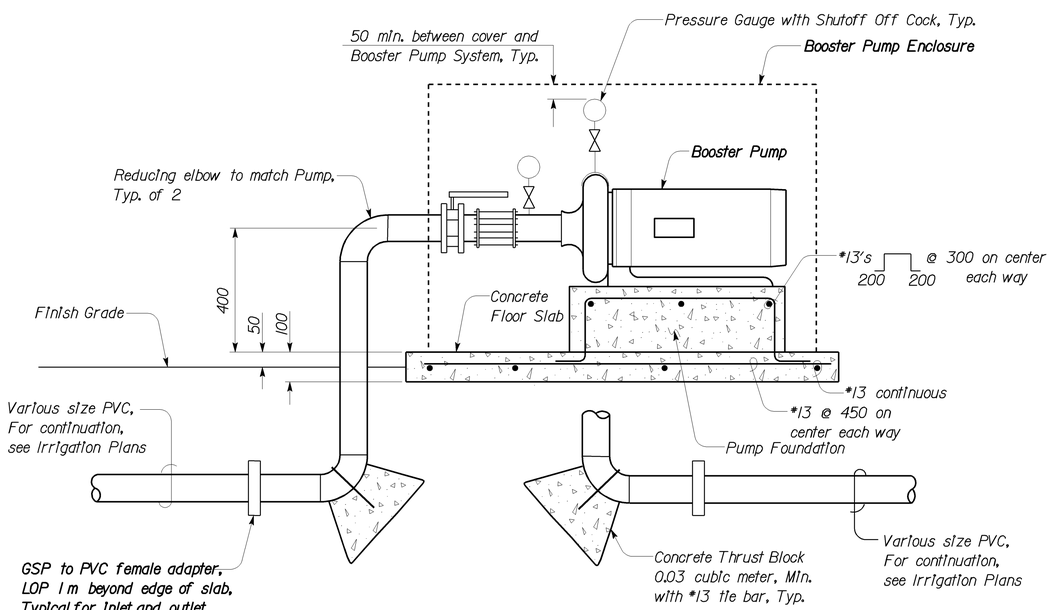

A ELEVATION

1:10

LEGEND

Ø	Diameter
	Flexible Expansion Coupling
----E----	Electrical Conduit, see "Electrical Plans"

ABBREVIATIONS

C.I.	Cast Iron
GSP	Galvanized Steel Pipe
L/m	Liters per minute
kW	Kilowatts
LOP	Limit of Payment
max.	Maximum
m	Meter
mm	Millimeter
min.	Minimum
PVC	Polyvinyl Chloride
RCMV	Remote Control Master Valve
typ.	Typical

NOTES:

1. Install 0.4 Square Meters of louvers on enclosure.
2. For size of conduit and conductors, see "Electrical Plans"
3. Install six 10 mm diameter Stainless Steel Expansion Anchors to secure Booster Pump Enclosure to the concrete and six 15 mm diameter Stainless Steel Expansion Anchors to secure Electrical Equipment support to the concrete. Place two flat washers between box and concrete at each location.

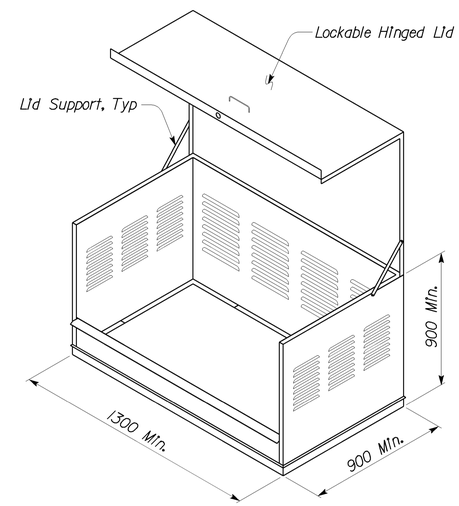

1 BOOSTER PUMP ENCLOSURE

No Scale

ACCEPTABLE EQUIVALENT TRADE SIZE DESIGNATION FOR MECHANICAL PIPING	
Metric Size Convention	English Size Convention
15 mm	1/2"
20 mm	3/4"
25 mm	1"
32 mm	1 1/4"
40 mm	1 1/2"
50 mm	2"
65 mm	2 1/2"
75 mm	3"
100 mm	4"
150 mm	6"

PUMP SCHEDULE

Location	Controller Number	PUMP LOCATION	PUMPING RATE L/m	TOTAL DYNAMIC HEAD meters*	kW	VOLT/ PHASE
1	A-1	JSO Butte House Road	320	46	5.6	240/1
2	A-2	JNO Butte House Road	475	43	5.6	240/1
3	A-3	JSO Queens Avenue	288 / 432	43 / 32	3.73	240/1
4	A-4	JNO Queens Avenue	432	38	3.73	240/1
5	A-5	JSO Portofino Drive	432	38	3.73	240/1
6	A-6	JNO Portofino Drive	432 / 80	37 / 41	3.73	480/3

**If a pre-packaged booster pump system is being provided, see the specifications for possible modifications to the dynamic head requirement.*

STRUCTURAL REVIEW

DESIGN SUPERVISOR — Jack Schoff
DESIGN ENGINEER — Jack Wheeler

	BY	CHECKED
DESIGN	Michael R. White	Jack Wheeler
DETAILS	Michael R. White	Jack Wheeler
QUANTITIES	Michael R. White	Jack Wheeler

STATE OF CALIFORNIA
DEPARTMENT OF TRANSPORTATION

DIVISION OF STRUCTURES
ELECTRICAL-MECHANICAL-WATER AND WASTEWATER DESIGN

BRIDGE NO.
KM POST T49.2/R51.8

BOOSTER PUMP SYSTEM

BOOSTER PUMP DETAILS

SHEET **M-1**

DS OSD metric Rev. 11/98
FILE => 31f500tw001.dgn
DATE PLOTTED => 30-JUL-2010 TIME PLOTTED => 08:48

ORIGINAL SCALE IN MILLIMETERS FOR REDUCED PLANS 0 10 20 30 40 50 60 70 80 90 100

CU 03340
EA 1F5001

DISREGARD PRINTS BEARING EARLIER REVISION DATES → 11-24-04 04-21-10

REVISION DATES (PRELIMINARY STAGE ONLY) SHEET OF

FILE => 31f500tw001.dgn

USERNAME => s1280033 DATE PLOTTED => 30-JUL-2010 TIME PLOTTED => 08:48

V1=1

DIST	COUNTY	ROUTE	KILOMETER POST TOTAL PROJECT	SHEET NO.	TOTAL SHEETS
03	Sut	99	T49.2/R51.8	73	88

Caltrans Metric

REGISTERED ELECTRICAL ENGINEER

October 5, 2007
PLANS APPROVAL DATE

REGISTERED PROFESSIONAL ENGINEER Jeffery G. McRae No. E14512 Exp. 6-30-08 ELECTRICAL STATE OF CALIFORNIA

The State of California or its officers or agents shall not be responsible for the accuracy or completeness of electronic copies of this plan sheet.

To get to the Caltrans web site, go to: http://www.dot.ca.gov

To accompany plans dated July 26, 2010

ELECTROLIERS

STANDARD TYPES
15, 15D
15 STRUCTURE
21, 21D STRUCTURE
30
31
32
35
36-20A

High mast lighting standard

Double arm lighting standard

Existing electrolier

Electrolier foundation (Future installation)

NOTES

1. Luminaires shall be 310 W HPS when installed on Type 21, 21D, 30, 31, 32, 35 and 36-20A Standards, unless otherwise specified. Luminaires shall be 200 W HPS when installed on other type standards or poles, unless otherwise specified.
2. Luminaires shall be the cutoff type, ANSI Type III medium cutoff lighting distribution, unless otherwise specified.
3. Variations noted adjacent to symbol on project plans.

Electrolier (see project notes or project plans)

Luminaire on wood pole

STANDARD NOTES

- AB — Abandon. If applied to conduit, remove conductors.
- BC — Install pull box in existing conduit run.
- BP — Pedestrian barricade, type as indicated on plan.
- CB — Install conduit into existing pull box.
- CC — Connect new and existing conduit. Remove existing conductors and install conductors as indicated.
- CF — Conduit to remain for future use. Remove conductors. Install pull wire or rope.
- DH — Detector handhole.
- FA — Foundation to be abandoned.
- IS — Install sign on signal mast arm.
- NS — No slip base on standard.
- PEC — Photoelectric control.
- PEU — Photoelectric unit.
- RC — Equipment or material to be removed and become the property of the Contractor.
- RE — Remove electrolier, fuses and ballast. Tape ends of conductors.
- RL — Relocate equipment.
- RR — Remove and reuse equipment.
- RS — Remove and salvage equipment.
- SC — Splice new to existing conductors.
- SD — Service disconnect.
- SF — Standard to remain for future use. Remove luminaire, pole conductors, fuses and ballast. Tape disconnects.
- TSP — Telephone service point.

ABBREVIATIONS AND EQUIPMENT DESIGNATIONS

PROPOSED	EXISTING	
BBS	bbs	Battery backup system
BC	bc	Bolt circle
C	C	Conduit
CCTV	cctv	Closed circuit television
CKT	ckt	Circuit
CMS	cms	Changeable message sign
DLC	dlc	Loop detector lead-in cable
EMS	ems	Extinguishable message sign
EVC	evc	Emergency vehicle cable
EVD	evd	Emergency vehicle detector
FB	fb	Flashing beacon
FBCA	fbca	Flashing beacon control assembly
FBS	fbs	Flashing beacon with slip base
FO	fo	Fiber optic
G	G	Ground (Equipment Grounding Conductor)
GFCI	GFCI	Ground fault circuit interrupt
HAR	har	Highway advisory radio
HEX	hex	Hexagonal
HPS	hps	High pressure sodium
IISNS	iisns	Internally illuminated street name sign
ISL	isl	Induction sign lighting
LED	led	Light emitting diode
LMA	lma	Luminaire mast arm
LPS	lps	Low pressure sodium
LTG	ltg	Lighting
LUM	lum	Luminaire
MAT	mat	Mast arm mounted vehicle signal faces, top attachment
MAS	mas	Mast arm mounted vehicle signal faces, side attachment
MAS-4A	mas-4A	Mast arm mounted vehicle signal faces, side attachment - 4 signal section
MAS-4B	mas-4B	
MAS-4C	mas-4C	
MAS-5A	mas-5A	Mast arm mounted vehicle signal faces, side attachment - 5 signal section
MAS-5B	mas-5B	
MC	mc	Mercury contactor
M/M	m/m	Multiple to multiple transformer
MT	mt	Conduit with pull wire or rope only
MTG	mtg	Mounting
	mv	Mercury vapor lighting fixture
N	N	Neutral (Grounded Conductor)
NC	NC	Normally closed
NO	NO	Normally open
PB	pb	Pull box
PEC	pec	Photoelectric control (Type I, II, III, IV or V as shown)
PED	ped	Pedestrian
PEU	peu	Photoelectric unit
PPB	ppb	Pedestrian push button
RL	RL	Relocated equipment
RM	rm	Ramp metering
SB	sb	Slip base
SIC	sic	Signal interconnect cable
SIG	sig	Signal
SMA	sma	Signal mast arm
SNS	sns	Street name sign
SP	sp	Service point
TDC	tdc	Telephone demarcation cabinet
TMS	tms	Traffic monitoring station
TOS	tos	Traffic Operations System
VEH	veh	Vehicle
XFMR	xfmr	Transformer
COMM	comm	Communication
RWIS	rwis	Roadway weather information system

SOFFIT AND WALL MOUNTED LUMINAIRES

Pendant, 70 W HPS unless otherwise specified.

Flush, 70 W HPS unless otherwise specified.

Wall surface, 70 W HPS unless otherwise specified.

Existing soffit or wall luminaire to remain unmodified.

Existing soffit or wall luminaire to be modified as specified.

NOTE

Arrow indicates "street side" of luminaire.

STATE OF CALIFORNIA
DEPARTMENT OF TRANSPORTATION

ELECTRICAL SYSTEMS (SYMBOLS AND ABBREVIATIONS)

NO SCALE

ALL DIMENSIONS ARE IN MILLIMETERS UNLESS OTHERWISE SHOWN

RSP ES-1A DATED OCTOBER 5, 2007 SUPERSEDES STANDARD PLAN ES-1A DATED JULY 1, 2004-PAGE 413 OF THE STANDARD PLANS BOOK DATED JULY 2004.

REVISED STANDARD PLAN RSP ES-1A

2004 REVISED Std PLAN RSP ES-1A

6-27-07

DIST	COUNTY	ROUTE	KILOMETER POST TOTAL PROJECT	SHEET NO.	TOTAL SHEETS
03	Sut	99	T49.2/R51.8	74	88

Caltrans Metric

REGISTERED ELECTRICAL ENGINEER

October 5, 2007
PLANS APPROVAL DATE

REGISTERED PROFESSIONAL ENGINEER Jeffery G. McRae No. E14512 Exp. 6-30-08 ELECTRICAL STATE OF CALIFORNIA

The State of California or its officers or agents shall not be responsible for the accuracy or completeness of electronic copies of this plan sheet.

To get to the Caltrans web site, go to: http://www.dot.ca.gov

To accompany plans dated July 26, 2010

CONDUIT

PROPOSED	EXISTING	
		Lighting conduit, unless otherwise indicated or noted
		Traffic signal conduit
C	c	Communication conduit
T	t	Telephone conduit
F	f	Fire alarm conduit
FO	fo	Fiber optic conduit
		Conduit termination RSP ES-9A C
R	r	Conduit riser in/on structure or Service pole

SERVICE EQUIPMENT

PROPOSED	EXISTING	
OH	oh	Overhead lines
U	u	Wood pole "U" indicates utility owned
		Pole guy-with anchor
		Utility transformer-ground mounted
III		Service equipment enclosure type
		Service equipment enclosure door indicates front of enclosure
T	t	Telephone demarcation cabinet

POLE-MOUNTED SERVICE DESIGNATION

Type of installation

TYPE H SERVICE - 8.8 m ← Pole height above grade

ILLUMINATED OVERHEAD SIGN

PROPOSED	EXISTING	
		Overhead sign - Single post
		Overhead sign - Two post
		Overhead sign - Mounted on structure
		Overhead sign with electrolier

SIGNAL EQUIPMENT

PROPOSED	EXISTING	
		Pedestrian signal face
		Pedestrian push button post
		Pedestrian barricade
		Vehicle signal face (with backplate, 3-Section: red, yellow and green)
		Vehicle signal face with angle visors
PV	PV	Modifications of basic symbols: "L" Indicates all non-arrow sections louvered "LG" Indicates louvered green section only "PV" indicates 300 mm programmed visibility sections "200" indicates all 200 mm sections (only when specified)
		Type 15TS and Vehicle signal face
		Vehicle signal face with red, yellow and green left arrow sections
		Vehicle signal face with red and yellow sections and up green arrow
		Vehicle signal face (5 Section) with red, yellow and green sections and yellow and green right arrows
		Type 1 Standard and attached vehicle signal faces
		Standard with signal mast arm only and attached vehicle signal faces and internally illuminated street name sign
		Type 33 Standard, Left-turn vehicle signal face and sign
		Standard with luminaire and signal mast arms and attached vehicle signal faces
		Cantilever flashing beacon Type 9 Frame, with a sign unless otherwise specified or indicated
Y Y	Y Y	Type 15-FBS Standard with two vehicle signal face sections with lens, backplate and visor with a sign
R	Y	Flashing beacon. One vehicle signal face section with lens, backplate and visor. "R" indicates red indication, "Y" indicates yellow indication
		Controller assembly. Door indicates front of cabinet
		Guard post
		Type 1 Standard with "Meter On" sign
		Emergency vehicle detector

NOTES

1. All signal sections shall be 300 mm unless shown otherwise.
2. Signal heads shall be provided with backplates unless shown otherwise.
3. Signal indication shall be LED.

STATE OF CALIFORNIA
DEPARTMENT OF TRANSPORTATION

ELECTRICAL SYSTEMS (SYMBOLS AND ABBREVIATIONS)

NO SCALE

ALL DIMENSIONS ARE IN MILLIMETERS UNLESS OTHERWISE SHOWN

RSP ES-1B DATED OCTOBER 5, 2007 SUPERSEDES STANDARD PLAN ES-1B DATED JULY 1, 2004-PAGE 414 OF THE STANDARD PLANS BOOK DATED JULY 2004.

REVISED STANDARD PLAN RSP ES-1B

2004 REVISED Std PLAN RSP ES-1B

8-9-07

DIST	COUNTY	ROUTE	KILOMETER POST TOTAL PROJECT	SHEET NO.	TOTAL SHEETS
03	Sut	99	T49.2/R51.8	75	88

Caltrans Metric

REGISTERED ELECTRICAL ENGINEER

October 5, 2007
PLANS APPROVAL DATE

REGISTERED PROFESSIONAL ENGINEER
Jeffery G. McRae
No. E14512
Exp. 6-30-08
ELECTRICAL
STATE OF CALIFORNIA

The State of California or its officers or agents shall not be responsible for the accuracy or completeness of electronic copies of this plan sheet.

To get to the Caltrans web site, go to: http://www.dot.ca.gov

To accompany plans dated July 26, 2010

EQUIPMENT IDENTIFICATION

ILLUMINATED SIGN IDENTIFICATION NUMBER:

Sign No. 12345 — Sign number - Place on post or structure

10 ISL SCI 1.0

- 1.0 — Transformer rating (kVA)
- SCI — Lighting control type
- ISL — Number and type of fixtures

Do NOT place on standard or structure

ELECTROLIER OR EQUIPMENT IDENTIFICATION NUMBER:

12345 - 4.6

- 4.6 — Mast arm length in meters, if shown. Do not place on standard or structure.
- 12345 — Equipment number - Place on standard or structure. Existing equipment numbers are shown in parenthesis

CONDUIT AND CONDUCTOR IDENTIFICATION:

41C, 2#10, 15#14, 2 DLC

- 2#10, 15#14, 2 DLC — Number and size of conductors and cables
- 41C — Size of conduit in millimeters

Ø1, Ø2, Ø2P, etc.	Traffic phase identification for signal faces, detectors and phase diagrams
1 2 3	Project note numbers
A B C	Equipment description, installation or item numbers
1 2 3	Conduit run numbers

SIGNAL AND LIGHTING STANDARD (TYPICAL DESIGNATION):

19A - 3 - 161

- 161 — Wind velocity=161 km/h
- 3 — Case 3 arm loading
- 19A — Standard type
- Standard Plan sheet number
- Detail number or letter

WIRING DIAGRAM LEGEND

P	Pole
CB	Circuit breaker
A	Ampere
V	Volt
M	Metered
UM	Unmetered
NB	Neutral bus
GB	Ground bus
G	Equipment grounding conductor
N	Grounded conductor (Neutral)

- External conductor
- Conductor or bus
- Tie point
- Contactor coil
- Contactor, Contact NO
- Terminal blocks
- Contactor, Contact NC
- Enclosure bond
- Grounding electrode
- Circuit breaker
- Receptacle

PULL BOXES

PROPOSED EXISTING

Pull box-No. 5 unless otherwise indicated or noted.

3 / 9A(21)

Pull box-Additional designations or descriptions

3 = No. 3½ pull box
5 = No. 5 pull box
6 = No. 6 pull box
7 = No. 7 (Ceiling pull box)
8 = No. 8 (Pendant soffit pull box)
9 = No. 9 pull box
9A = No. 9A pull box

(C) = Communications pull box
(E) = Pull box with extension
(S) = Sprinkler control pull box
(21) = Anchor bolts and conduit for future installation of Type 21 Standard
(T) = Traffic pull box

MISCELLANEOUS EQUIPMENT

PROPOSED	EXISTING	
CMS	cms	Changeable message sign
		Closed circuit television camera
		Highway advisory radio pole and antenna
EMS	ems	Extinguishable message sign
		Detection device
M V	m v	M = Microwave sensor V = Video image sensor

VEHICLE DETECTORS

5 J 9 U

- U — Vehicle detector designation
- 9 — U = Upper, L = Lower
- J — Slot number in input file
- 5 — Input file (I or J)
- Phase

PROPOSED	EXISTING	
		Type A detector loop. Outline of sawcut shown.
		Type B detector loop. Outline of sawcut shown.
		Type C detector loop. Outline of sawcut shown.
		Type D detector loop. Outline of sawcut shown.
		Type E detector loop. Outline of sawcut shown.
		Type Q detector loop. Outline of sawcut shown.
		Magnetic detector
DH	dh	Detector handhole
		Microwave or video detection zone

STATE OF CALIFORNIA
DEPARTMENT OF TRANSPORTATION

ELECTRICAL SYSTEMS (SYMBOLS AND ABBREVIATIONS)

NO SCALE

ALL DIMENSIONS ARE IN MILLIMETERS UNLESS OTHERWISE SHOWN

RSP ES-1C DATED OCTOBER 5, 2007 SUPERSEDES STANDARD PLAN ES-1C DATED JULY 1, 2004-PAGE 415 OF THE STANDARD PLANS BOOK DATED JULY 2004.

REVISED STANDARD PLAN RSP ES-1C

2004 REVISED Std PLAN RSP ES-1C

10-1-07

DIST	COUNTY	ROUTE	KILOMETER POST TOTAL PROJECT	SHEET NO.	TOTAL SHEETS
03	Sut	99	T49.2/R51.8	76	88

Caltrans Metric

Jeffery G. McRae
REGISTERED ELECTRICAL ENGINEER

October 5, 2007
PLANS APPROVAL DATE

REGISTERED PROFESSIONAL ENGINEER Jeffery G. McRae No. E14512 Exp. 6-30-08 ELECTRICAL STATE OF CALIFORNIA

The State of California or its officers or agents shall not be responsible for the accuracy or completeness of electronic copies of this plan sheet.

To get to the Caltrans web site, go to: http://www.dot.ca.gov

To accompany plans dated July 26, 2010

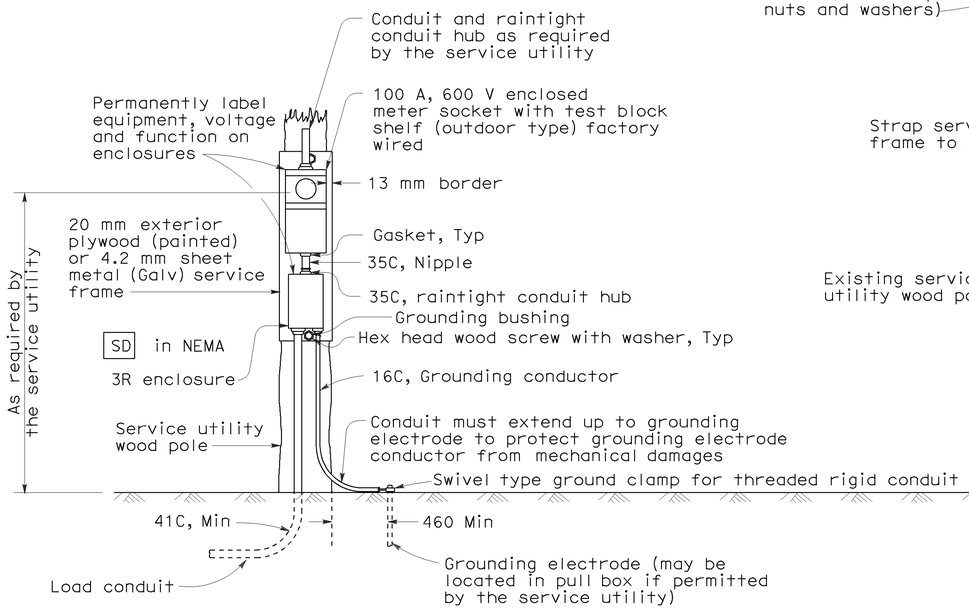

TYPE SCE-1 SERVICE

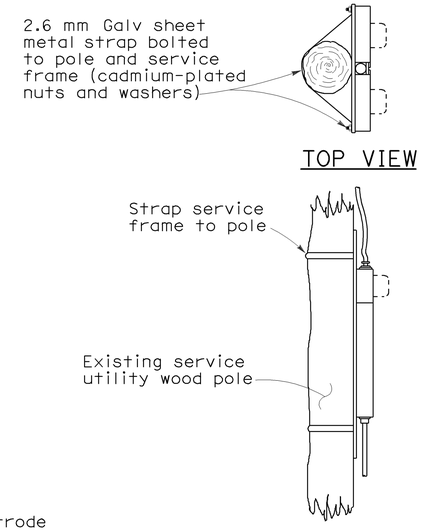

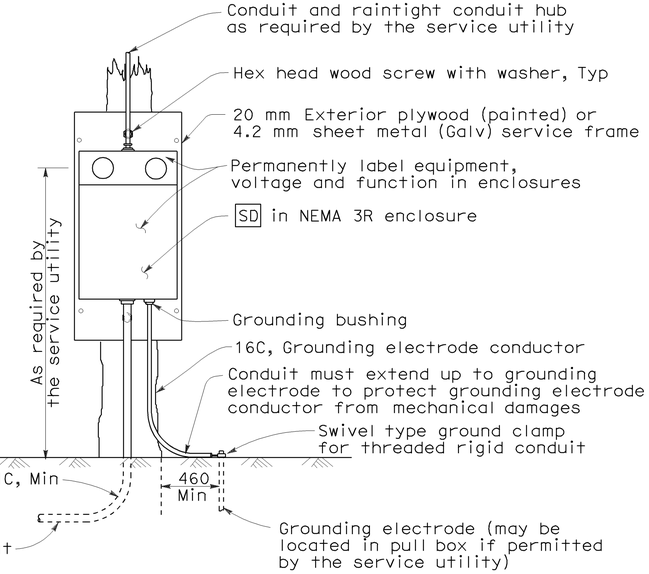

TYPE SCE-2 SERVICE

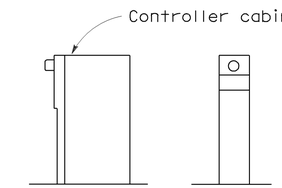

TYPE OF SERVICE (TYPICAL)

Type II service equipment enclosure mounted on a side of a controller cabinet.
Type III complete free-standing service equipment enclosure.

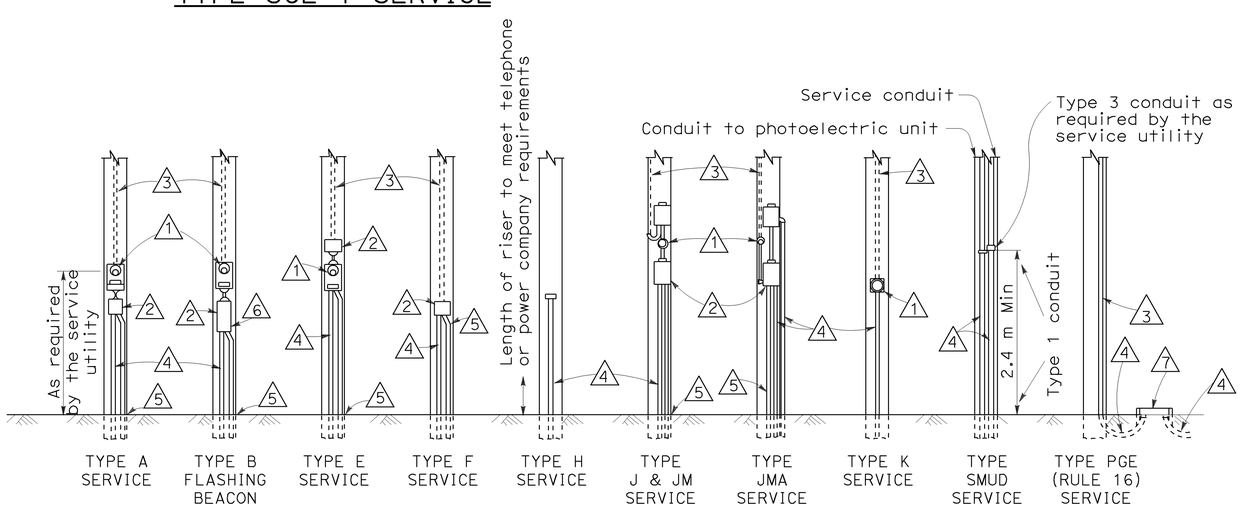

NOTES

1. Meter socket.
2. Service enclosure with a minimum 60 A rated main circuit breaker, unless otherwise shown.
3. (a) Utility owned pole. The service utility will furnish and install required service riser, PEU with conductors and other equipment as needed.
   (b) State owned pole. The Contractor shall furnish and install required service riser and equipment.
4. Conduit, length and size as required.
5. 16C, 1#6. See "Service Grounding" detail.
6. Flashing beacon control assembly.
7. Service pull box, No. 5 unless otherwise noted, furnished and installed by the Contractor. Service utility shall determine the exact location.

POLE MOUNTED SERVICE INSTALLATIONS

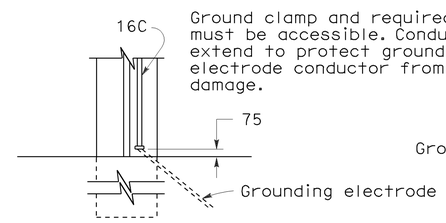

TYPE A

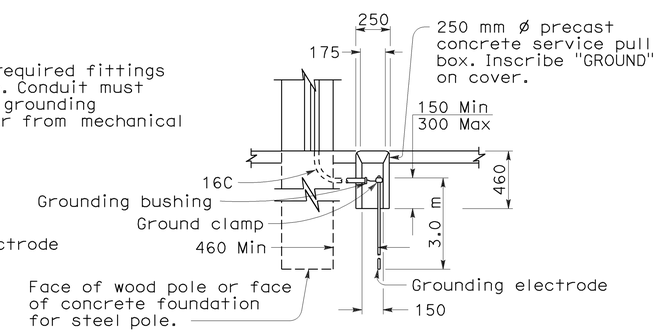

TYPE B

Use where service utility requires 460 mm clearance between grounding electrode and the pole or service equipment enclosure. Installation shown is for sidewalk or paved areas. In unpaved areas, omit special service pull box and locate ground clamp above ground or locate ground clamp in nearest pull box.

SERVICE GROUNDING

STATE OF CALIFORNIA
DEPARTMENT OF TRANSPORTATION

ELECTRICAL SYSTEMS (SERVICE EQUIPMENT)

NO SCALE

ALL DIMENSIONS ARE IN MILLIMETERS UNLESS OTHERWISE SHOWN

RSP ES-2A DATED OCTOBER 5, 2007 SUPERSEDES STANDARD PLAN ES-2A DATED JULY 1, 2004-PAGE 416 OF THE STANDARD PLANS BOOK DATED JULY 2004.

REVISED STANDARD PLAN RSP ES-2A

2004 REVISED Std PLAN RSP ES-2A

7-2-07

DIST	COUNTY	ROUTE	KILOMETER POST TOTAL PROJECT	SHEET NO.	TOTAL SHEETS
03	Sut	99	T49.2/R51.8	77	88

Caltrans Metric

Jeffery G. McRae
REGISTERED ELECTRICAL ENGINEER

October 5, 2007
PLANS APPROVAL DATE

REGISTERED PROFESSIONAL ENGINEER
Jeffery G. McRae
No. E14512
Exp. 6-30-08
ELECTRICAL
STATE OF CALIFORNIA

The State of California or its officers or agents shall not be responsible for the accuracy or completeness of electronic copies of this plan sheet.

To get to the Caltrans web site, go to: http://www.dot.ca.gov

To accompany plans dated July 26, 2010

2004 REVISED Std PLAN RSP ES-2C

NOTES-TYPE III SERVICE EQUIPMENT ENCLOSURES:

1. Service equipment enclosure and metering equipment shall meet the requirements of the service utility. The meter area shall have a sealable, lockable, weathertight cover that can be removed without the use of tools.

2. Service equipment enclosures shall be factory wired and conform to NEMA standards.

3. Dimensions of service equipment enclosures shall meet the requirements of the service utility.

4. The dead front panels on Type III-A service equipment enclosures shall have a continuous stainless steel or aluminum piano hinge. The panel in front of the breakers shall be secured with a latch or captive screws. No live parts shall be mounted on the dead front panel.

5. The exterior door shall have provisions for padlocking. The padlock hole shall be a minimum diameter of 11 mm.

6. Enclosures housing transformers of more than one kVA shall have effective screened ventilation louvers of not less than 32 000 mm^2. Screen shall be stainless steel No. 304, with a No. 10 size mesh. Framed screen shall be secured with at least four bolts.

7. Fasteners on the exterior of the enclosure shall be vandal-resistant and shall not be removable from the exterior. Screws, nuts, bolts and washers shall be stainless steel.

8. Landing lugs for incoming service conductors shall be compatible with either copper or aluminum conductors sized to suit the conductors shown on the plan. Landing lugs shall be copper or tin-plated aluminum. Neutral bus shall be rated for 125 A and be suitable for copper or aluminum conductors unless otherwise specified. The terminal shall include but not be limited to:

   a) Incoming terminals (landing lugs)
   b) Neutral lugs
   c) Solid neutral terminal strip

9. At least 6 standard single pole circuit breaker spaces, 20 mm nominal, shall be provided for branch circuits. Circuit breaker interiors shall be copper. Interiors of enclosure shall accept plug-in or cable-in/cable-out circuit breakers.

10. Control wiring shall be 600 V, 14 stranded machine tool wire. Where subject to flexing, 19 strand wire shall be used.

11. Main bus shall be rated for 125 A and shall be tin-plated copper.

12. A plastic laminated wiring diagram shall be provided with brass mounting eyelets and attached to the inside of the enclosure and the wiring diagram shall affixed to the interior with a UL or ETL approved method.

13. An engraved phenolic nameplate on the dead front panel indicating the function of each circuit or device shall be installed with stainless steel rivets or stainless steel screws:

    a) Adjacent to the breaker or device with character size a minimum of 3 mm.

    b) At the top of the exterior door panel indicating system number, voltage level and number of phases with character size a minimum of 5 mm.

14. The plan shows the approximate location of devices within the enclosure. Components may be rearranged, however, the "working" clearances within the service equipment enclosure shall be maintained.

15. In unpaved areas a raised portland cement concrete pad 600 mm x 100 mm x width of foundation shall be constructed in front of new service equipment enclosure installation. Pad shall be set to elevation of foundation.

16. Foundation shall extend 50 mm minimum beyond edge of service equipment enclosure.

17. Internal bus, where shown, is typical only. Alternative design of proposed service equipment enclosure shall be submitted to the Engineer for approval.

18. Plug-in circuit breakers may be mounted in the vertical or horizontal position. Cable-in/cable-out circuit breakers shall be mounted in the vertical position.

19. Type III-AF and Type III-BF service equipment enclosures shall have the meter viewing windows located on the front side of the service equipment enclosures.

20. Type III-AR and Type III-BR service equipment enclosures shall be similarly constructed as Type III-AF and Type III-BF respectively, except the meter viewing windows shall be located on the back side of the service equipment enclosures.

21. Minimum clearance shall be required for front and back of service equipment enclosure per National Electrical Code, Article 110.26, "Spaces About Electric Equipment (600 Volts, Nominal, or Less)".

STATE OF CALIFORNIA
DEPARTMENT OF TRANSPORTATION

ELECTRICAL SYSTEMS (SERVICE EQUIPMENT NOTES TYPE III SERIES)

NO SCALE

ALL DIMENSIONS ARE IN MILLIMETERS UNLESS OTHERWISE SHOWN

RSP ES-2C DATED OCTOBER 5, 2007 SUPERSEDES STANDARD PLAN ES-2C DATED JULY 1, 2004-PAGE 418 OF THE STANDARD PLANS BOOK DATED JULY 2004.

REVISED STANDARD PLAN RSP ES-2C

DIST	COUNTY	ROUTE	KILOMETER POST TOTAL PROJECT	SHEET NO.	TOTAL SHEETS
03	Sut	99	T49.2/R51.8	78	88

Caltrans Metric

REGISTERED ELECTRICAL ENGINEER

October 5, 2007
PLANS APPROVAL DATE

Jeffery G. McRae No. E14512 Exp. 6-30-08 ELECTRICAL — REGISTERED PROFESSIONAL ENGINEER — STATE OF CALIFORNIA

The State of California or its officers or agents shall not be responsible for the accuracy or completeness of electronic copies of this plan sheet.

To get to the Caltrans web site, go to: http://www.dot.ca.gov

To accompany plans dated July 26, 2010

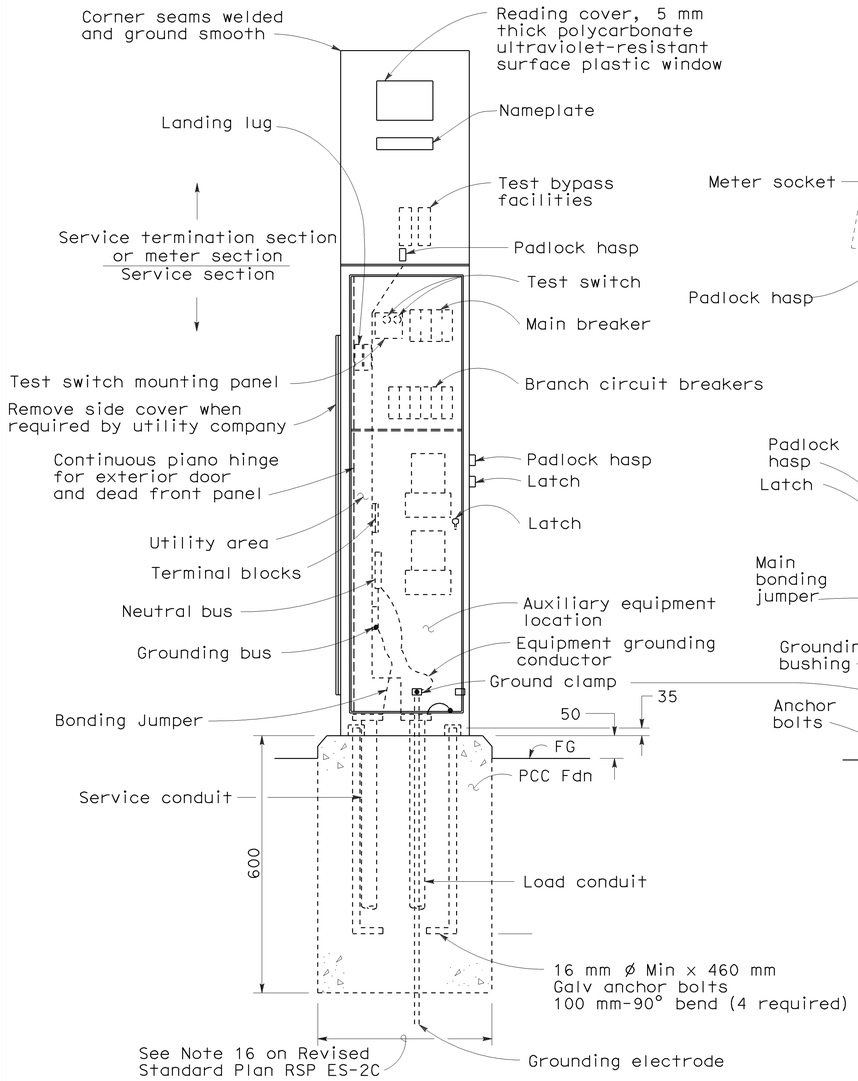

FRONT VIEW

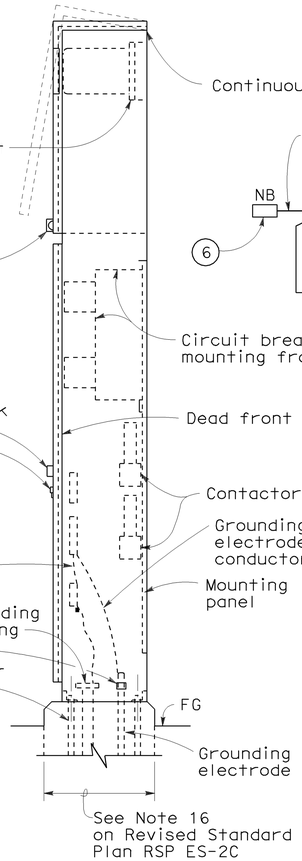

SIDE VIEW

TYPE III-AF SERVICE EQUIPMENT ENCLOSURE (TYPICAL)

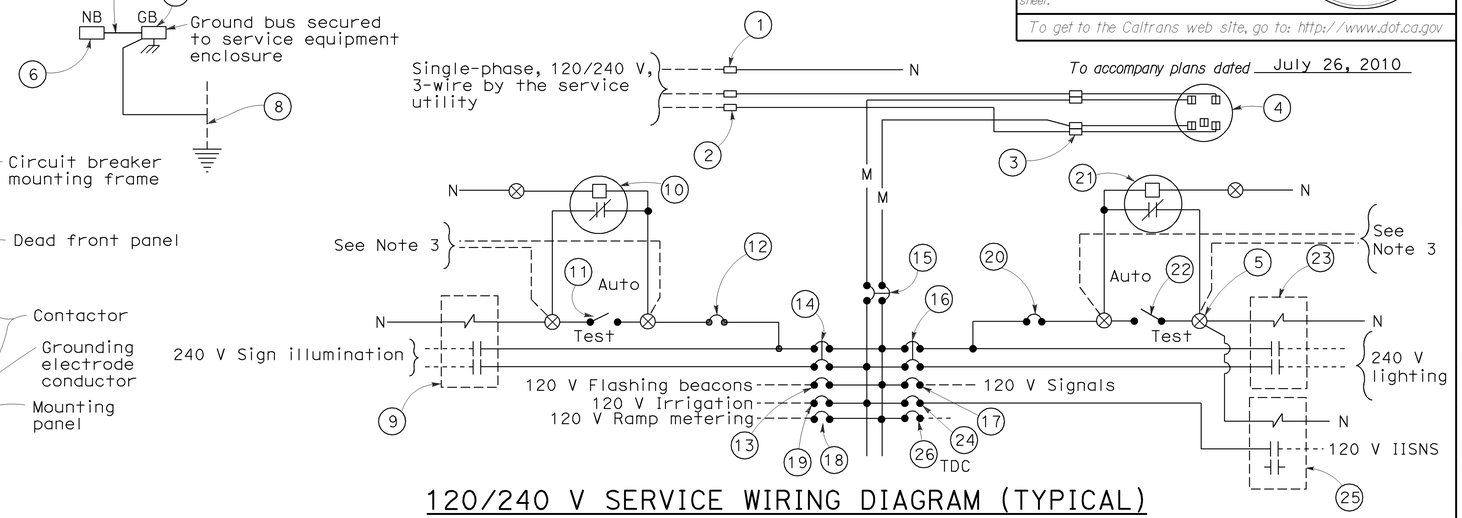

120/240 V SERVICE WIRING DIAGRAM (TYPICAL)

TYPE III-A SERVICE (120/240 V) EQUIPMENT LEGEND

ITEM No.	COMPONENT	NAME PLATE DESCRIPTION	ITEM No.	COMPONENT	NAME PLATE DESCRIPTION
1	Neutral lug		14	30 A, 240 V, 2P, CB	Sign Illumination
2	Landing lug (Note 6)		15	100 A, 240 V, 2P, CB	Main Breaker
3	Test bypass facility		16	30 A, 240 V, 2P, CB	Lighting
4	Meter socket and support		17	50 A, 120 V, 1P, CB	Signals
5	Terminal blocks		18	30 A, 120 V, 1P, CB	Ramp Metering
6	Neutral bus		19	20 A, 120 V, 1P, CB	Irrigation
7	Ground bus		20	15 A, 120 V, 1P, CB	Lighting Control
8	Grounding electrode		21	Photoelectric unit (Note 7)	
9	30 A, 2PNO Contactor	Sign Illumination	22	15 A, 1P, Test switch	Lighting Test Switch
10	Photoelectric unit (Note 7)		23	60 A, 2PNO Contactor	Lighting
11	15 A, 1P, Test switch	Sign Illumination Test Switch	24	15 A, 120 V, 1P, CB	IISNS
12	15 A, 120 V, 1P, CB	Sign Illumination Control	25	30 A, 2PNO Contactor	IISNS
13	15 A, 120 V, 1P, CB	Flashing Beacon	26	20 A, 120 V, 1P, CB	Telephone Demarcation Cabinet

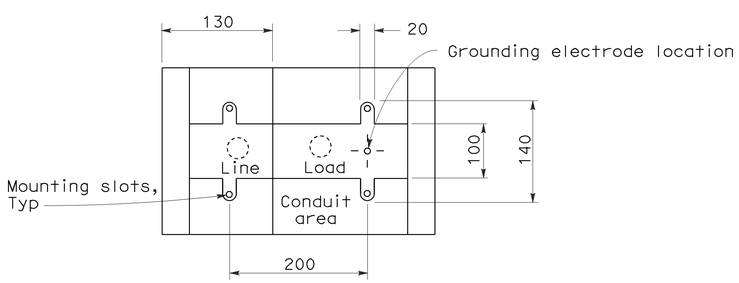

BASE FOR TYPE III-A SERVICE EQUIPMENT ENCLOSURE

NOTES: (FOR SERVICE EQUIPMENT ENCLOSURE)

1. Voltage ratings of service equipment shall conform to the service voltages indicated on the plans.
2. Unless otherwise indicated on the plans, service equipment items shall be provided for each service equipment enclosure as shown.
3. Connect to remote test switch mounted on lighting standards, sign post or structure when required.
4. Items No. 1 and 6 shall be isolated from the service equipment enclosure.
5. Meter sockets shall be 5 clip type.
6. The landing lug shall be suitable for multiple conductors.
7. Type V photoelectric control shall be used unless otherwise indicated on the plans.

STATE OF CALIFORNIA
DEPARTMENT OF TRANSPORTATION

ELECTRICAL SYSTEMS (SERVICE EQUIPMENT AND TYPICAL WIRING DIAGRAM, TYPE III -A SERIES)

NO SCALE

ALL DIMENSIONS ARE IN MILLIMETERS UNLESS OTHERWISE SHOWN

RSP ES-2D DATED OCTOBER 5, 2007 SUPERSEDES STANDARD PLAN ES-2D DATED JULY 1, 2004-PAGE 419 OF THE STANDARD PLANS BOOK DATED JULY 2004.

REVISED STANDARD PLAN RSP ES-2D

2004 REVISED Std PLAN RSP ES-2D

10-1-07

DIST	COUNTY	ROUTE	KILOMETER POST TOTAL PROJECT	SHEET NO.	TOTAL SHEETS
03	Sut	99	T49.2/R51.8	79	88

Caltrans Metric

Jeffery G. McRae
REGISTERED ELECTRICAL ENGINEER

October 5, 2007
PLANS APPROVAL DATE

REGISTERED PROFESSIONAL ENGINEER
Jeffery G. McRae
No. E14512
Exp. 6-30-08
ELECTRICAL
STATE OF CALIFORNIA

The State of California or its officers or agents shall not be responsible for the accuracy or completeness of electronic copies of this plan sheet.

To get to the Caltrans web site, go to: http://www.dot.ca.gov

To accompany plans dated July 26, 2010

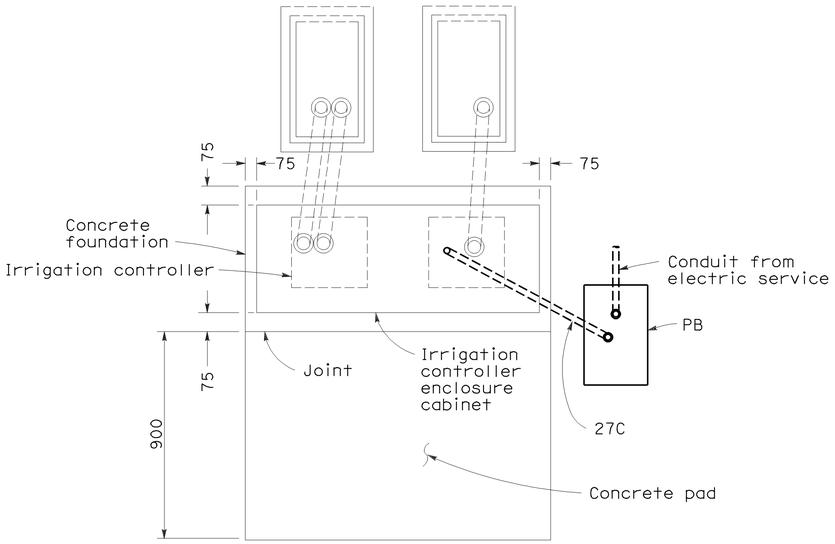

PLAN

NOTE:

See Standard Plan H10 for other details.

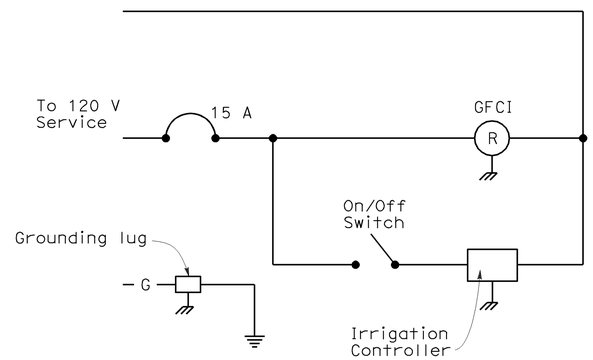

IRRIGATION CONTROLLER ENCLOSURE CABINET WIRING DIAGRAM (TYPICAL)

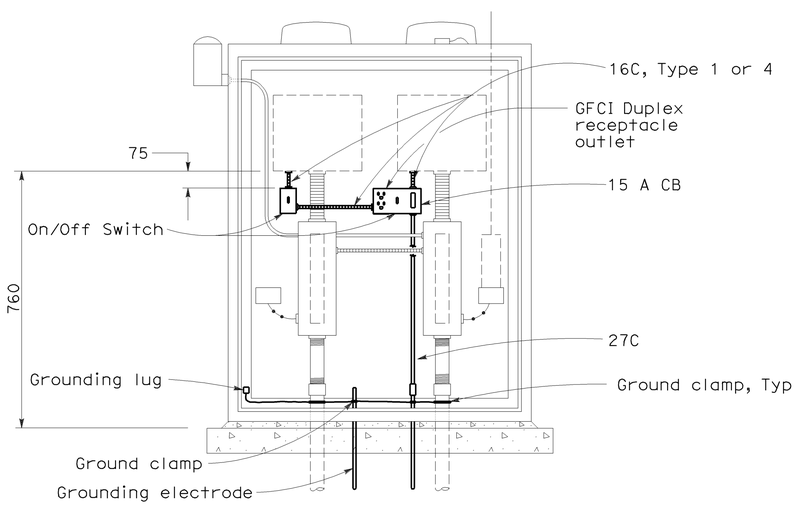

ELEVATION

STATE OF CALIFORNIA
DEPARTMENT OF TRANSPORTATION

ELECTRICAL SYSTEMS (IRRIGATION CONTROLLER ENCLOSURE CABINET)

NO SCALE

ALL DIMENSIONS ARE IN MILLIMETERS UNLESS OTHERWISE SHOWN

RSP ES-3H DATED OCTOBER 5, 2007 SUPERSEDES STANDARD PLAN ES-3H DATED JULY 1, 2004-PAGE 430 OF THE STANDARD PLANS BOOK DATED JULY 2004.

REVISED STANDARD PLAN RSP ES-3H

2004 REVISED Std PLAN RSP ES-3H

8-9-07

DIST	COUNTY	ROUTE	KILOMETER POST TOTAL PROJECT	SHEET NO.	TOTAL SHEETS
03	Sut	99	T49.2/R51.8	80	88

Caltrans Metric

REGISTERED ELECTRICAL ENGINEER

October 5, 2007
PLANS APPROVAL DATE

REGISTERED PROFESSIONAL ENGINEER Jeffery G. McRae No. E14512 Exp. 6-30-08 ELECTRICAL STATE OF CALIFORNIA

The State of California or its officers or agents shall not be responsible for the accuracy or completeness of electronic copies of this plan sheet.

To get to the Caltrans web site, go to: http://www.dot.ca.gov

To accompany plans dated July 26, 2010

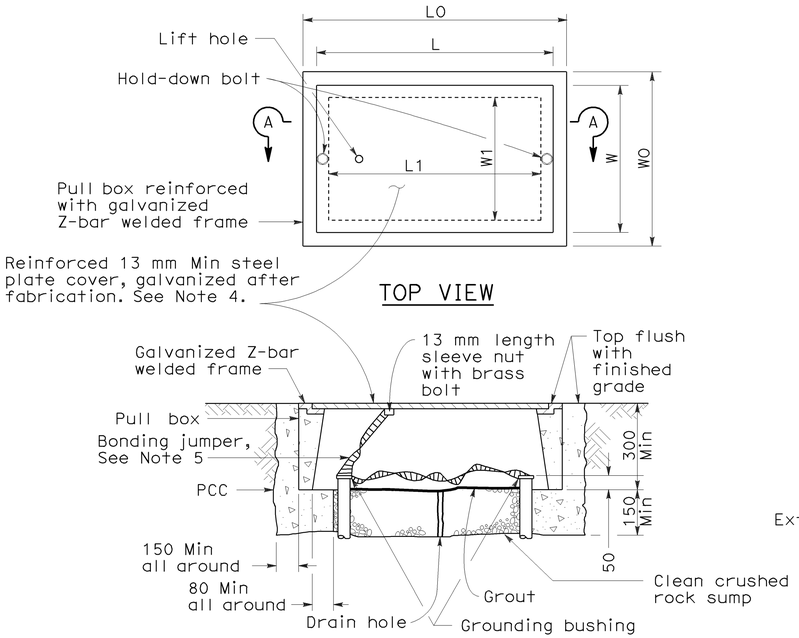

SECTION A-A

No. 3½(T), No. 5(T) AND No. 6(T) TRAFFIC PULL BOX

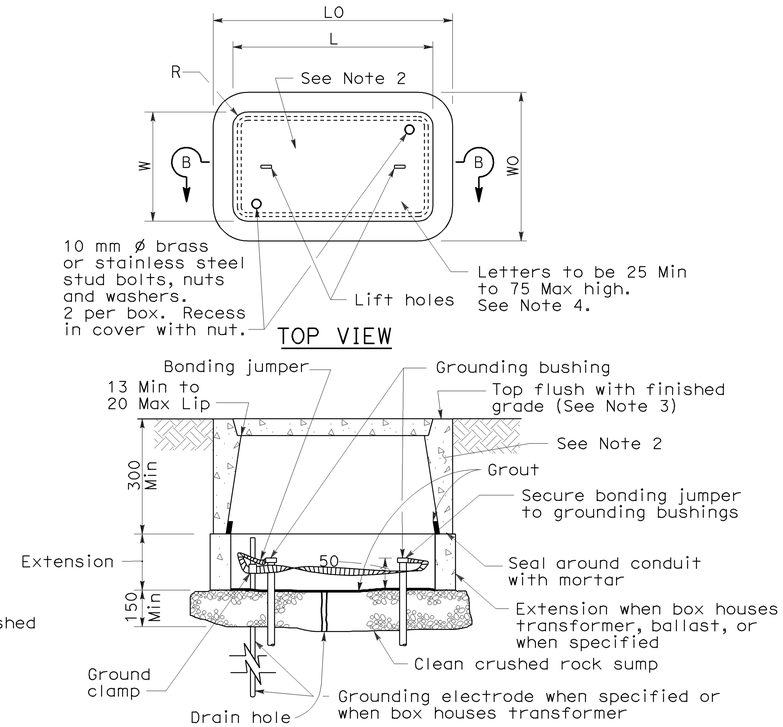

SECTION B-B

INSTALLATION DETAILS

DIMENSION TABLE

PULL BOX	CONCRETE BOX				NON-PCC BOX		CONCRETE OR NON-PCC COVERS				
	Minimum * Thickness	Minimum Depth Box and Extension	LO (mm)	WO (mm)	Minimum ** Thickness	Minimum Depth Box and Extension	L ** (mm)	W ** (mm)	R (mm)	Edge Thickness	Edge Taper
No. 3½	25 mm	No Extension	457	330	8 mm	No Extension	390	260	27	45 mm	3 mm
No. 5	25 mm	560 mm	666	425	8 mm	510 mm	590	350	32	50 mm	3 mm
No. 6	40 mm	610 mm	854	524	10 mm	510 mm	775	444	32	50 mm	3 mm

* Excluding conduit web ** Top dimension

DIMENSION TABLE

PULL BOX	CONCRETE BOX						NON-PCC BOX		CONCRETE OR NON-PCC COVERS				
	Minimum * Thickness	Minimum Depth Box and Extension	LO (mm)	WO (mm)	L1 (mm)	W1 (mm)	Minimum ** Thickness	Minimum Depth Box and Extension	L ** (mm)	W ** (mm)	R (mm)	Edge Thickness	Edge Taper
No. 3½(T)	40 mm	305 mm	530 ±	430 ± 25	370 ±	270 ± 25	Does Not Apply		510 ±	350 ±	0	13 mm	None
No. 5(T)	45 mm	305 mm	750 ±	600 ± 25	480 ±	330 ± 25	Does Not Apply		690 ±	410 ±	0	13 mm	None
No. 6(T)	50 mm	305 mm	900 ±	760 ± 25	600 ±	430 ± 25	Does Not Apply		840 ±	510 ±	0	13 mm	None

* Excluding conduit web ** Top dimension

NOTES ON PULL BOXES:

1. Traffic pull box shall be provided with steel cover and special concrete footing. Steel cover shall have embossed non-skid pattern.

2. Steel reinforcing shall be as regularly used in the standard products of the respective manufacturer.

3. Top of pull boxes shall be flush with surrounding grade or top of adjacent curb, except that in unpaved areas where pull box is not immediately adjacent to and protected by a concrete foundation, pole or other protective construction, the box shall be placed with its top 30 mm above surrounding grade. Where practicable, pull boxes shown in the vicinity of curbs shall be placed adjacent to the back of curb, and pull boxes shown adjacent to standards shall be placed on side of foundation facing away from traffic, unless otherwise noted. When pull box is installed in sidewalk area, the depth of the pull box shall be adjusted so that the top of the pull box is flush with the sidewalk.

4. Pull box covers shall be marked as follows: "SERVICE" Service circuits between service point and service disconnect; "SPRINKLER-CONTROL" Sprinkler control circuits, 50 V or less; "CALTRANS" On all pull boxes, except pull boxes marked "SPRINKLER-CONTROL"; and "TELEPHONE" Telephone service.

   a) No. 3½ pull box.

      1) "SIGNAL" Traffic signal circuits with or without street or sign lighting circuits.

      2) "ST LIGHTING" Street or sign lighting circuits where voltage is under 600 V.

   b) No. 5, 6, 9 or 9A pull box.

      1) "TRAFFIC SIGNAL" Traffic signal circuits with or without street or sign lighting circuits.

      2) "STREET LIGHTING" Street or sign lighting circuits where voltage is under 600 V.

      3) "STREET LIGHTING-HIGH VOLTAGE" Street or sign lighting circuits where voltage is above 600 V.

      4) "IRRIGATION" Circuits to irrigation controller 120 V or more.

      5) "RAMP METER" Ramp meter circuits.

      6) "COUNT STATION" Count or speed monitor circuits.

      7) "COMMUNICATION" Communication circuits.

      8) "TOS COMMUNICATIONS" TOS communications line.

      9) "TOS POWER" TOS power.

      10) "TDC POWER" Telephone demarcation cabinet power.

      11) "CCTV" Closed circuit television circuits.

      12) "TMS" Traffic monitoring station circuits.

      13) "CMS" Changeable message sign circuits.

      14) "HAR" Highway advisory radio circuits.

5. Bonding jumper for metal covers shall be 1 m long, minimum.

6. The nominal dimensions of the opening in which the cover sets shall be the same as the cover dimensions except the length and width dimensions shall be 3 mm greater.

7. Covers and boxes shall be interchangeable with California standard male and female gages. When interchanged with a standard male or female gage, the top surfaces shall be flush within 3 mm. Top outside edge of concrete covers and pull boxes shall have a 6 mm minimum radius.

8. Pull box shall not be installed within the boundaries of new or existing curb ramps.

9. Pull boxes for electroliers, post and signal standards shall be located ± 1.5 m from the station of the adjacent electrolier, post or signal standard. Pull boxes shall be placed adjacent to back of curb or edge of shoulder except where this is impractical, a box may be placed in another suitable protected and accessible location.

STATE OF CALIFORNIA
DEPARTMENT OF TRANSPORTATION

ELECTRICAL SYSTEMS (PULL BOX DETAILS)

NO SCALE

ALL DIMENSIONS ARE IN MILLIMETERS UNLESS OTHERWISE SHOWN

RSP ES-8 DATED OCTOBER 5, 2007 SUPERSEDES STANDARD PLAN ES-8 DATED JULY 1, 2004-PAGE 467 OF THE STANDARD PLANS BOOK DATED JULY 2004.

REVISED STANDARD PLAN RSP ES-8

2004 REVISED Std PLAN RSP ES-8

7-3-07

DIST	COUNTY	ROUTE	KILOMETER POST TOTAL PROJECT	SHEET NO.	TOTAL SHEETS
03	Sut	99	T49.2/R51.8	81	88

Caltrans Metric

REGISTERED ELECTRICAL ENGINEER

October 5, 2007
PLANS APPROVAL DATE

REGISTERED PROFESSIONAL ENGINEER
Jeffery G. McRae
No. E14512
Exp. 6-30-08
ELECTRICAL
STATE OF CALIFORNIA

The State of California or its officers or agents shall not be responsible for the accuracy or completeness of electronic copies of this plan sheet.

To get to the Caltrans web site, go to: http://www.dot.ca.gov

To accompany plans dated July 26, 2010

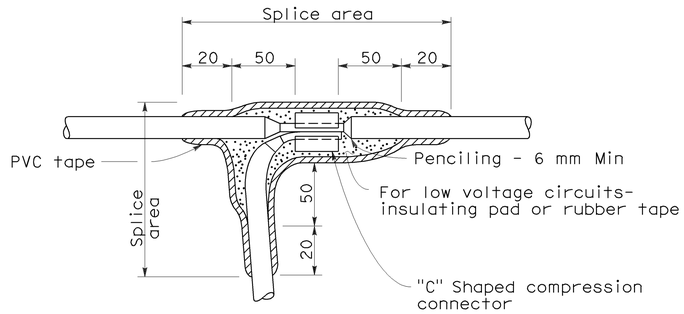

TYPE "C" SPLICE

Between 1 free-end and 1 through conductor

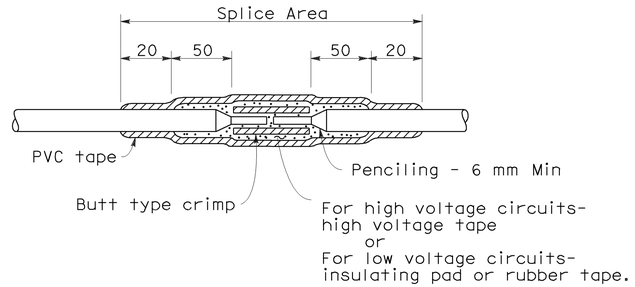

TYPE "S" SPLICE

Between 2 free-ends

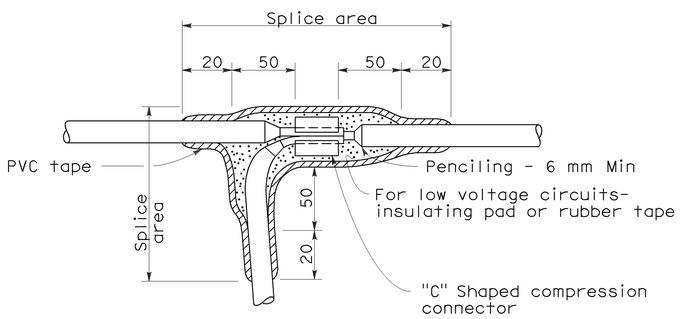

TYPE "T" SPLICE

For 3 free-ends

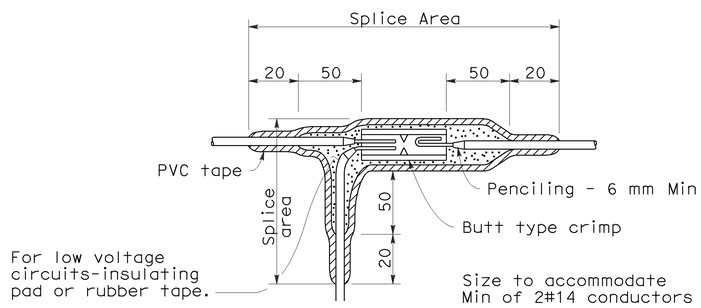

TYPE "ST" SPLICE

NOTES:

1. Dimensions are minimum.
2. Rubber tapes shall be rolled after application.

INSULATION METHODS

Low Voltage Circuits (0-600 V)

METHOD "B"

1. Completely cover the splice area with electrical insulating coating and allow to dry.
2. Apply 2 layers of electrical insulating pad with minimum thickness of 4 mm each layer or 2 layers, half lapped, synthetic oil resistant, self fusing rubber tape.
3. Apply 3 layers half lapped polyvinyl chloride tape.
4. Cover entire splice with electrical insulating coating and allow to dry.

High Voltage Circuits (Over 600 V)

1. Completely cover the splice area with electrical insulating coating and allow to dry.
2. Apply high voltage tape to a minimum thickness equal to original insulation.
3. Apply 3 layers half lapped polyvinyl chloride tape.
4. Cover entire splice with electrical insulating coating and allow to dry.

STATE OF CALIFORNIA
DEPARTMENT OF TRANSPORTATION

ELECTRICAL SYSTEMS (SPLICING DETAILS)

NO SCALE

ALL DIMENSIONS ARE IN MILLIMETERS UNLESS OTHERWISE SHOWN

RSP ES-13A DATED OCTOBER 5, 2007 SUPERSEDES STANDARD PLAN ES-13A DATED JULY 1, 2004-PAGE 478 OF THE STANDARD PLANS BOOK DATED JULY 2004.

REVISED STANDARD PLAN RSP ES-13A

2004 REVISED Std PLAN RSP ES-13A

6-27-07

DIST	COUNTY	ROUTE	KILOMETER POST TOTAL PROJECT	SHEET NO.	TOTAL SHEETS
03	Sut	99	T49.2/R51.8	82	88

Caltrans Metric

Jeffrey G. McRae
REGISTERED ELECTRICAL ENGINEER

October 5, 2007
PLANS APPROVAL DATE

REGISTERED PROFESSIONAL ENGINEER
Jeffery G. McRae
No. E14512
Exp. 6-30-08
ELECTRICAL
STATE OF CALIFORNIA

The State of California or its officers or agents shall not be responsible for the accuracy or completeness of electronic copies of this plan sheet.

To get to the Caltrans web site, go to: http://www.dot.ca.gov

To accompany plans dated July 26, 2010

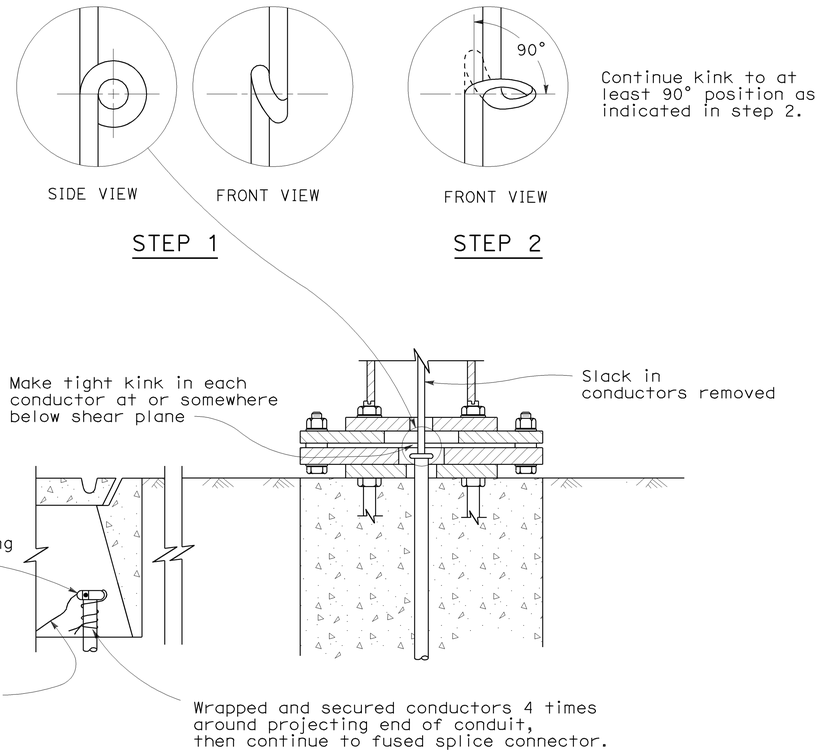

KINKING DETAIL FOR SLIP BASE STANDARDS

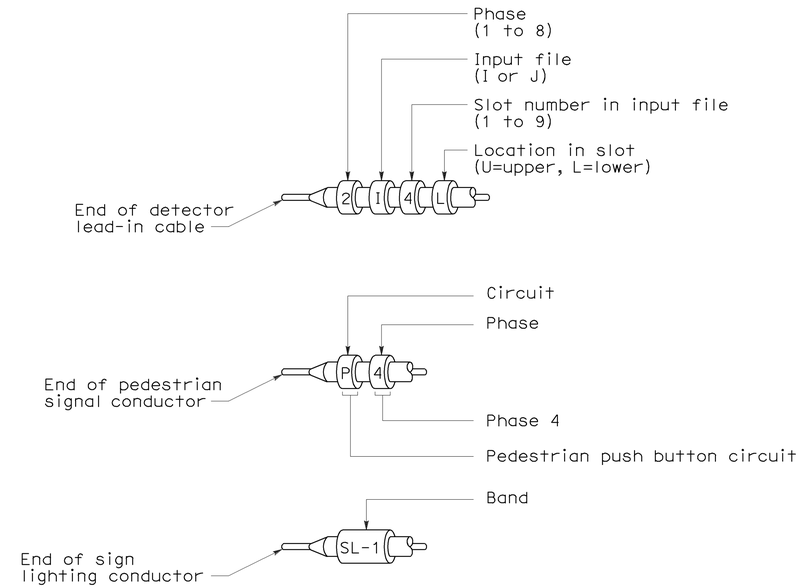

TYPICAL BANDING OF CONDUCTOR ENDS

Primary lines of multiple ballasts shall be provided with fused connectors.
Fuse ratings shall be as noted below.

CIRCUIT VOLTAGE	FUSE VOLTAGE RATING	FUSE CURRENT RATING																
		HPS LAMP BALLAST								LOW PRESSURE SODIUM BALLAST					INDUCTION SIGN LIGHTING	SINGLE PHASE (TWO WIRE) TRANSFORMERS (PRIMARY SIDE)		
		70 W	100 W	150 W	200 W	250 W	310 W	400 W	1000 W	35 W	55 W	90 W	135 W	180 W	85 W	1 kVA	2 kVA	3 kVA
120 V	250 V	5	5	5	5	5	5	5	-	5	5	5	5	5	5	10	20	30
240 V	250 V	5	5	5	5	5	5	5	5	3	3	3	5	5	5	6	10	20
480 V	500-600 V	5	5	5	5	5	5	5	5	2	2	2	3	3	1*	3	6	10

* See Revised Standard Plan RSP ES-15D, Type SC3 Control.

FUSE RATINGS FOR FUSED CONNECTORS

LUMINAIRE BALLAST FUSING

STATE OF CALIFORNIA
DEPARTMENT OF TRANSPORTATION

ELECTRICAL SYSTEMS (WIRING DETAILS AND FUSE RATINGS)

NO SCALE

ALL DIMENSIONS ARE IN MILLIMETERS UNLESS OTHERWISE SHOWN

RSP ES-13B DATED OCTOBER 5, 2007 SUPERSEDES STANDARD PLAN ES-13B DATED JULY 1, 2004-PAGE 479 OF THE STANDARD PLANS BOOK DATED JULY 2004.

REVISED STANDARD PLAN RSP ES-13B

2004 REVISED Std PLAN RSP ES-13B

10-1-07

DIST	COUNTY	ROUTE	KILOMETER POST TOTAL PROJECT	SHEET NO.	TOTAL SHEETS
03	Sut	99	T49.2/R51.8	83	88

Caltrans Metric

Randell D. Hiatt
REGISTERED CIVIL ENGINEER

June 6, 2008
PLANS APPROVAL DATE

REGISTERED PROFESSIONAL ENGINEER
Randell D. Hiatt
No. C50200
Exp. 6-30-09
CIVIL
STATE OF CALIFORNIA

The State of California or its officers or agents shall not be responsible for the accuracy or completeness of electronic copies of this plan sheet.

To get to the Caltrans web site, go to: http://www.dot.ca.gov

To accompany plans dated July 26, 2010

2004 REVISED Std PLAN RSP T1A

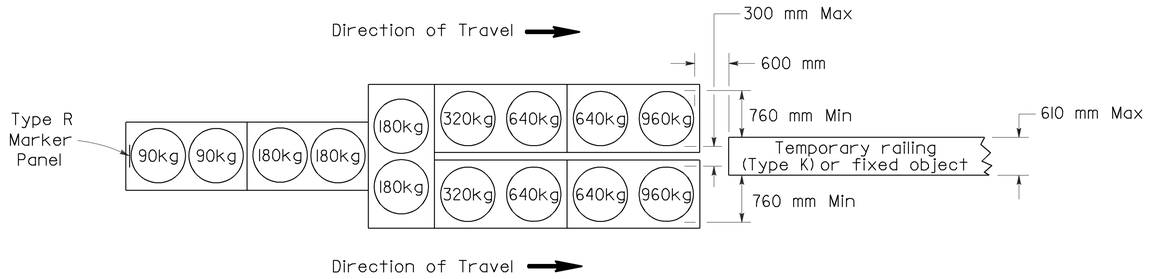

ARRAY 'TU14'

Approach speed 70 km/h or more

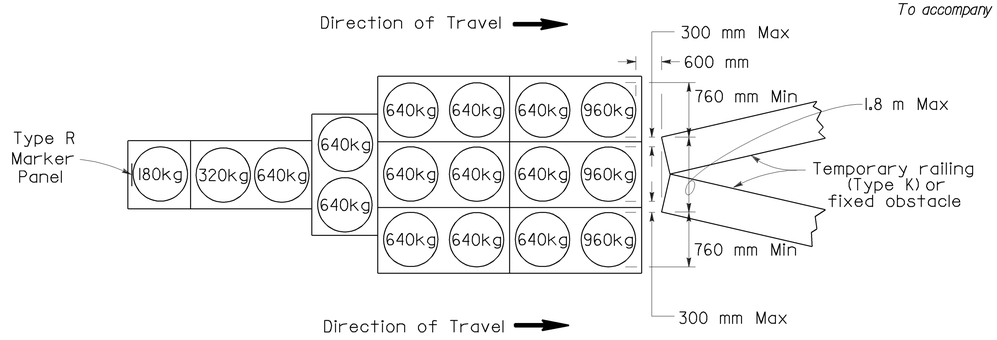

ARRAY 'TU17'

Approach speed less than 70 km/h

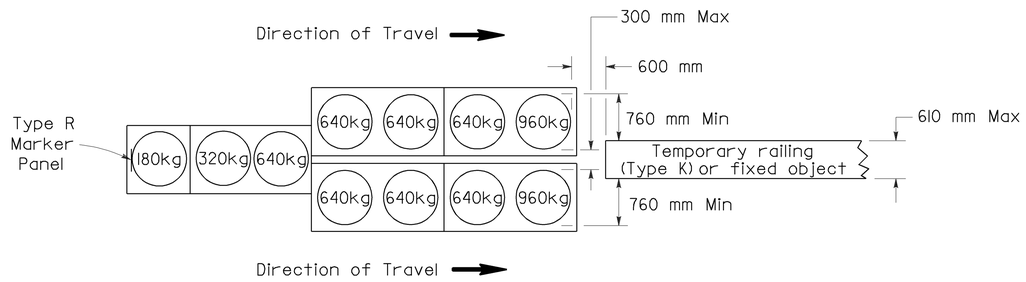

ARRAY 'TU11'

Approach speed less than 70 km/h

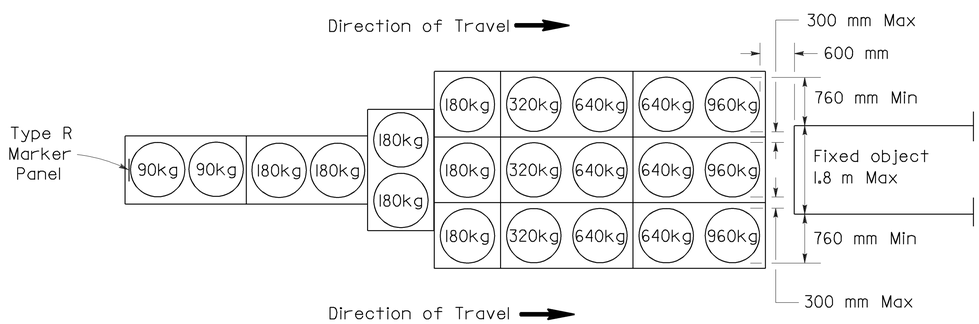

ARRAY 'TU21'

Approach speed 70 km/h or more

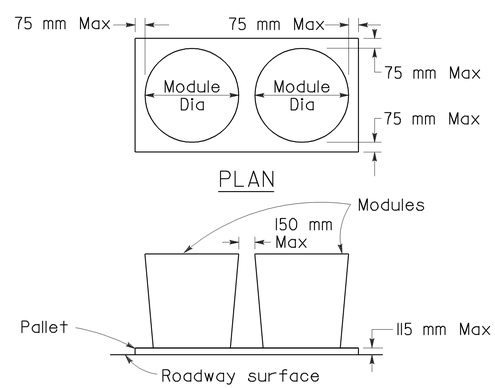

CRASH CUSHION PALLET DETAIL

See Note 7

NOTES

1. (XXX) Indicates sand filled module location and mass of sand in kilograms for each module. Module spacing is based on the greater diameter of the module.
2. All sand masses are nominal.
3. Temporary crash cushion arrays shall not encroach on the traveled way.
4. Place the top of Type R marker panel 25 mm below the module lid.
5. Refer to Standard Plan A73B for marker details.
6. Approach speeds indicated conform to NCHRP 350 Report criteria.
7. Use of Pallets is optional.

STATE OF CALIFORNIA
DEPARTMENT OF TRANSPORTATION

TEMPORARY CRASH CUSHION, SAND FILLED (UNIDIRECTIONAL)

NO SCALE

ALL DIMENSIONS ARE IN MILLIMETERS UNLESS OTHERWISE SHOWN

RSP T1A DATED JUNE 6, 2008 SUPERSEDES STANDARD PLAN T1A
DATED July 1, 2004 - PAGE 211 OF THE STANDARD PLANS BOOK DATED July 2004.

REVISED STANDARD PLAN RSP T1A

5-16-08

DIST	COUNTY	ROUTE	KILOMETER POST TOTAL PROJECT	SHEET NO.	TOTAL SHEETS
03	Sut	99	T49.2/R51.8	84	88

Caltrans Metric

Randell D. Hiatt
REGISTERED CIVIL ENGINEER

June 6, 2008
PLANS APPROVAL DATE

REGISTERED PROFESSIONAL ENGINEER
Randell D. Hiatt
No. C50200
Exp. 6-30-09
CIVIL
STATE OF CALIFORNIA

The State of California or its officers or agents shall not be responsible for the accuracy or completeness of electronic copies of this plan sheet.

To get to the Caltrans web site, go to: http://www.dot.ca.gov

To accompany plans dated July 26, 2010

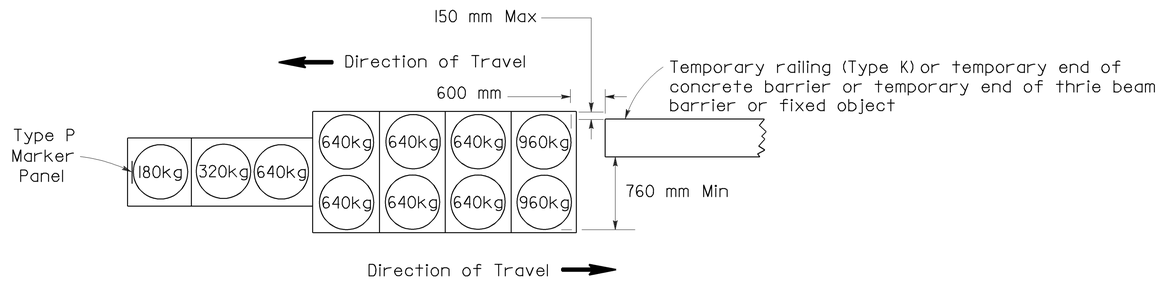

ARRAY 'TBI1'

Approach speed less than 70 km/h

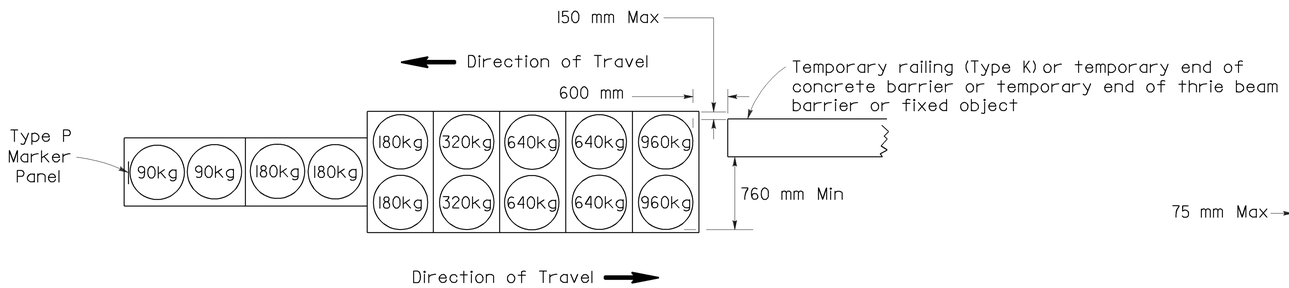

ARRAY 'TBI4'

Approach speed 70 km/h or more

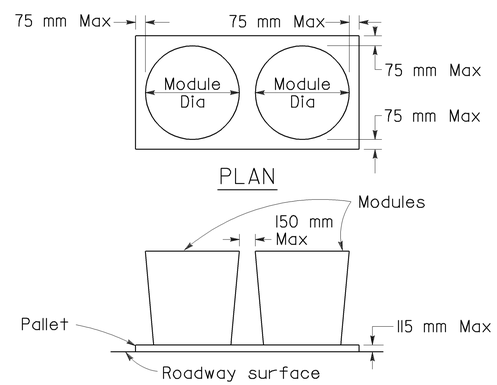

CRASH CUSHION PALLET DETAIL

See Note 7

NOTES

1. (XXX) Indicates sand filled module location and mass of sand in kilograms for each module. Module spacing is based on the greater diameter of the module.
2. All sand masses are nominal.
3. Temporary crash cushion arrays shall not encroach on the traveled way.
4. Place the Type P marker panel so that the bottom of the panel rests upon the pallet.
5. Refer to Standard Plan A73B for marker details.
6. Approach speeds indicated conform to NCHRP 350 Report criteria.
7. Use of Pallets is optional.

STATE OF CALIFORNIA
DEPARTMENT OF TRANSPORTATION

TEMPORARY CRASH CUSHION, SAND FILLED (BIDIRECTIONAL)

NO SCALE

ALL DIMENSIONS ARE IN MILLIMETERS UNLESS OTHERWISE SHOWN

RSP T1B DATED JUNE 6, 2008 SUPERSEDES STANDARD PLAN T1B DATED July 1, 2004 - PAGE 212 OF THE STANDARD PLANS BOOK DATED July 2004.

REVISED STANDARD PLAN RSP T1B

2004 REVISED Std PLAN RSP T1B

5-16-08

DIST	COUNTY	ROUTE	KILOMETER POST TOTAL PROJECT	SHEET NO.	TOTAL SHEETS
03	Sut	99	T49.2/R51.8	85	88

Caltrans Metric

Randell D. Hiatt
REGISTERED CIVIL ENGINEER

June 6, 2008
PLANS APPROVAL DATE

REGISTERED PROFESSIONAL ENGINEER
Randell D. Hiatt
No. C50200
Exp. 6-30-09
CIVIL
STATE OF CALIFORNIA

The State of California or its officers or agents shall not be responsible for the accuracy or completeness of electronic copies of this plan sheet.

To get to the Caltrans web site, go to: http://www.dot.ca.gov

To accompany plans dated July 26, 2010

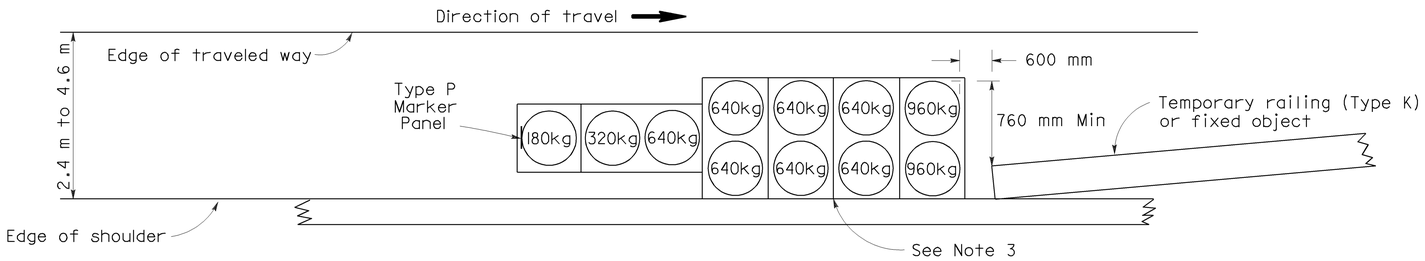

ARRAY 'TSI1'

Approach speed less than 70 km/h
See Note 9

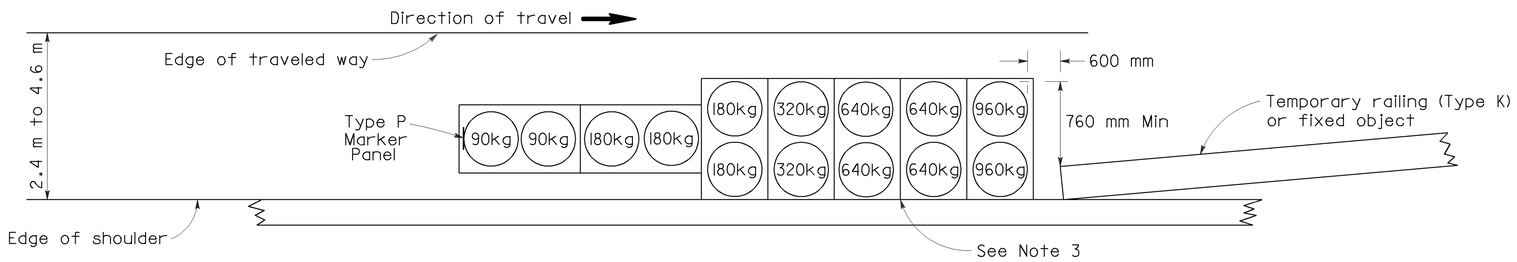

ARRAY 'TSI4'

Approach speed 70 km/h or more
See Note 9

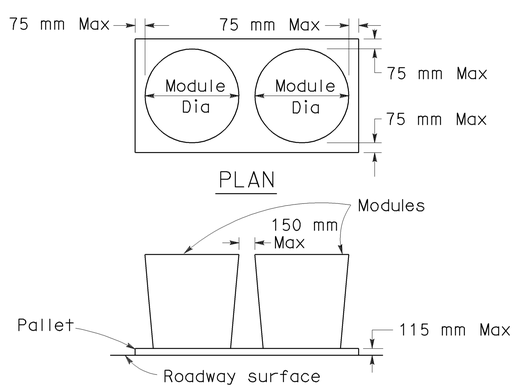

CRASH CUSHION PALLET DETAIL

See Note 11

NOTES

1. (XXX) Indicates sand filled module location and mass of sand in kilograms for each module. Module spacing is based on the greater diameter of the module.
2. All sand masses are nominal.
3. The temporary crash cushion arrays shown on this plan shall be used only in locations where there will be traffic on one side of the temporary crash cushion array.
4. If the fixed object or approach end of the temporary railing is less than 4.60 meters from the edge of traveled way, a temporary crash cushion is required.
5. Temporary crash cushion arrays shall not encroach on the traveled way.
6. Arrays for median shoulders shall conform to details shown on this plan for outside shoulders.
7. Place the Type P marker panel so that the bottom of the panel rest upon the pallet and faces traffic.
8. Refer to Standard Plan A73B for marker details.
9. For shoulder widths less than 2.4 m, appropriate approved crash cushion protection, other than sand filled modules, shall be provided at fixed objects and at approach ends of temporary railing. The specific type of crash cushion shall be as shown on the project plans or as specified in the Special Provisions, or if not shown on the project plans or specified in the Special Provisions, shall be as approved by the Engineer.
10. Approach speeds indicated conform to NCHRP 350 Report criteria.
11. Use of Pallets is optional.

STATE OF CALIFORNIA
DEPARTMENT OF TRANSPORTATION

TEMPORARY CRASH CUSHION, SAND FILLED (SHOULDER INSTALLATIONS)

NO SCALE

ALL DIMENSIONS ARE IN MILLIMETERS UNLESS OTHERWISE SHOWN

RSP T2 DATED JUNE 6, 2008 SUPERSEDES STANDARD PLAN T2
DATED July 1, 2004 - PAGE 213 OF THE STANDARD PLANS BOOK DATED July 2004.

REVISED STANDARD PLAN RSP T2

2004 REVISED Std PLAN RSP T2

5-16-08

To accompany plans dated July 26, 2010

Caltrans Metric

DIST	COUNTY	ROUTE	KILOMETER POST TOTAL PROJECT	SHEET NO.	TOTAL SHEETS
03	Sut	99	T49.2/R51.8	86	88

REGISTERED CIVIL ENGINEER

November 17, 2006
PLANS APPROVAL DATE

REGISTERED PROFESSIONAL ENGINEER Greg W. Edwards No. C36386 Exp. 6-30-08 CIVIL STATE OF CALIFORNIA

The State of California or its officers or agents shall not be responsible for the accuracy or completeness of electronic copies of this plan sheet.

To get to the Caltrans web site, go to: http://www.dot.ca.gov

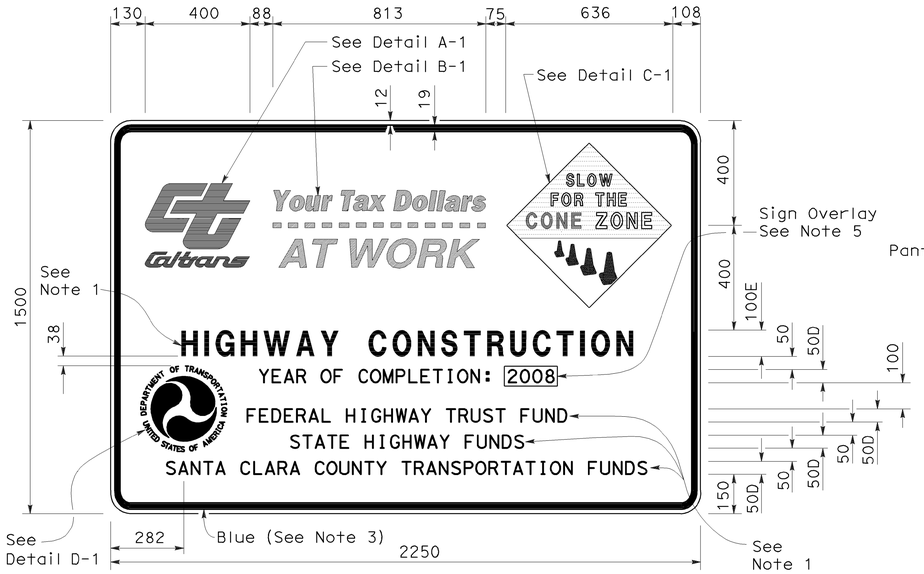

TYPE 1

DETAIL A-1

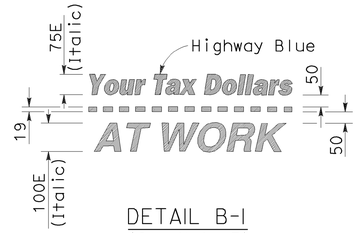

DETAIL B-1
(See Note 3)

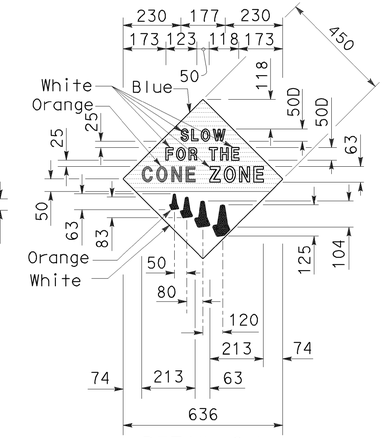

DETAIL C-1
(See Note 4)

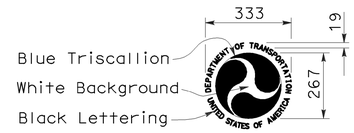

DETAIL D-1
(See Note 6)

NOTES:

1. The sign messages shown for type of project and fund types are examples only. See the Special Provisions for the applicable type of project and fund type messages to be used.
2. Except as otherwise shown, the legend of sign shall be black on a white background (non-reflective).
3. The border of the signs and details "B-1" and "B-2" shall be blue (non-reflective).
4. The diamond in details "C-1" and "C-2" shall be blue for the background of message, " SLOW FOR THE CONE ZONE", and white background for the orange cones. The color and type of font for the "SLOW FOR THE CONE ZONE" message shall be: "SLOW" white D; "FOR THE" white D; "CONE" orange Arial font; "ZONE" white Arial font.
5. Year of completion of project construction shown on the overlay is an example only. See the Special Provisions.
6. Use when the Project involves Federal Highway Trust Fund.

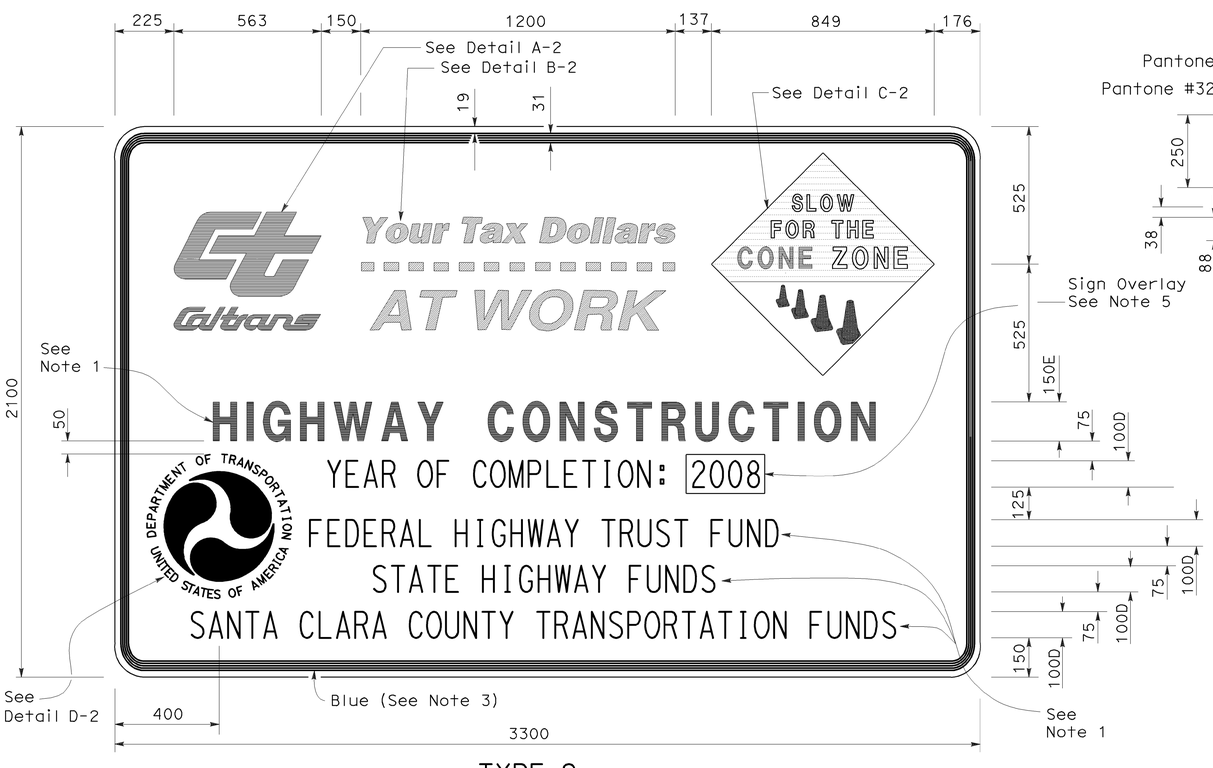

TYPE 2

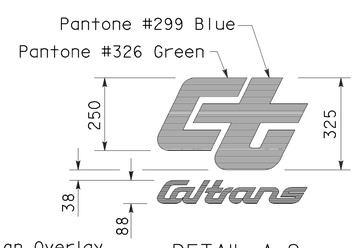

DETAIL A-2

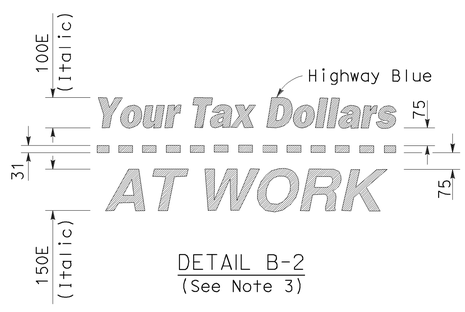

DETAIL B-2
(See Note 3)

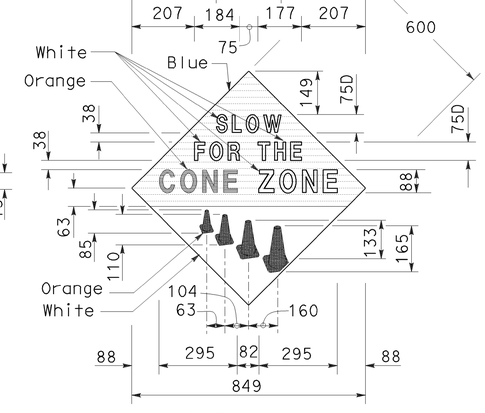

DETAIL C-2
(See Note 4)

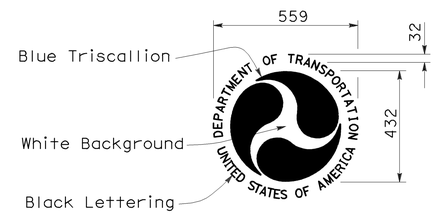

DETAIL D-2
(See Note 6)

STATE OF CALIFORNIA
DEPARTMENT OF TRANSPORTATION

CONSTRUCTION PROJECT FUNDING IDENTIFICATION SIGNS

NO SCALE

ALL DIMENSIONS ARE IN MILLIMETERS UNLESS OTHERWISE SHOWN

RSP T7 DATED NOVEMBER 17, 2006 SUPERSEDES RSP T7 DATED APRIL 28, 2005 AND STANDARD PLAN T7 DATED JULY 1, 2004-PAGE 217 OF THE STANDARD PLANS BOOK DATED JULY 2004.

REVISED STANDARD PLAN RSP T7

2004 REVISED Std PLAN RSP T7

9-7-06

DIST	COUNTY	ROUTE	KILOMETER POST TOTAL PROJECT	SHEET NO.	TOTAL SHEETS
03	Sut	99	T49.2/R51.8	87	88

To accompany plans dated July 26, 2010

Caltrans Metric

REGISTERED CIVIL ENGINEER

April 28, 2005
PLANS APPROVAL DATE

REGISTERED PROFESSIONAL ENGINEER Greg W. Edwards No. C36386 Exp. 6-30-06 CIVIL STATE OF CALIFORNIA

The State of California or its officers or agents shall not be responsible for the accuracy or completeness of electronic copies of this plan sheet.

To get to the Caltrans web site, go to: http://www.dot.ca.gov

NOTES

Unless otherwise specified in the special provisions, all temporary warning signs shall have black legend on orange background.

California code are designated by (CA). Otherwise, Federal codes are shown.

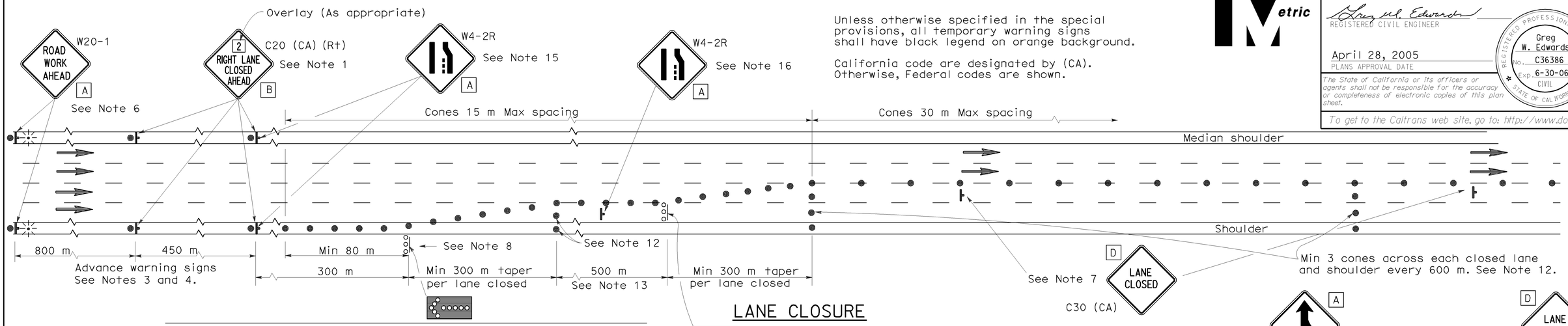

LANE CLOSURE

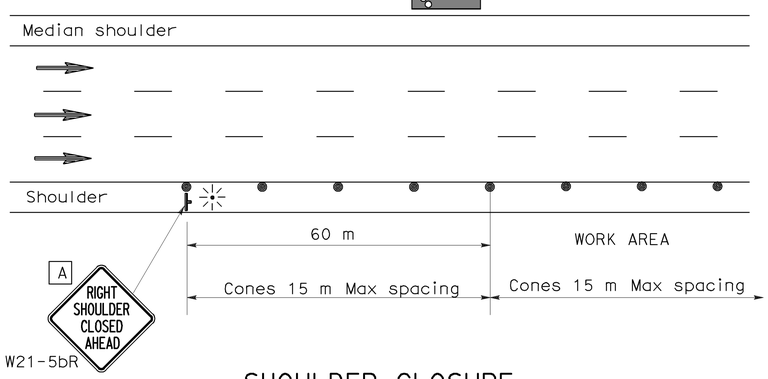

SHOULDER CLOSURE

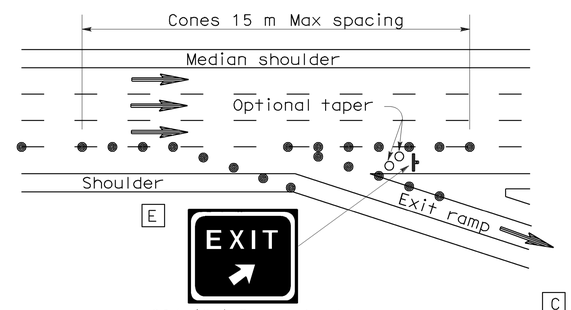

LANE CLOSURE AT EXIT RAMP

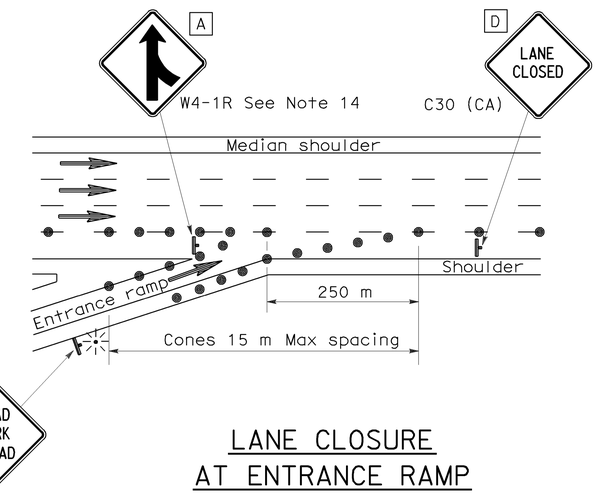

LANE CLOSURE AT ENTRANCE RAMP

NOTES

1. Median lane closures shall conform to the details for outside lane closures except that C20 (CA) (Lt) signs shall be used.
2. At least one person shall be assigned to provide full time maintenance of traffic control devices for lane closures.
3. Duplicate sign installations are not required:
   a) On opposite shoulder if at least one-half of the available lanes remain open to traffic.
   b) In the median if the width of the median shoulder is less than 2.4 m and the outside lanes are to be closed.
4. Each advance warning sign on each side of the roadway shall be equipped with at least two flags for daytime closure. Each flag shall be at least 400 mm x 400 mm in size and shall be orange or fluorescent red-orange in color. Flashing beacons shall be placed at the locations indicated for lane closure during hours of darkness.
5. A C14 (CA) "END ROAD WORK" sign, as appropriate, shall be placed at the end of the lane closure unless the end of work area is obvious or ends within a larger project's limits.
6. If the W20-1 sign would follow within 600 m of a stationary W20-1 or C11 (CA) "ROAD WORK NEXT _____ MILES", use a C20 (CA) sign for the first advance warning sign.
7. Place a C30 (CA) sign every 600 m throughout length of lane closure.
8. One flashing arrow sign for each lane closed. The first flashing arrow sign shall be Type I. All others may be either Type I or Type II.
9. A minimum 450 m of sight distance shall be provided where possible for vehicles approaching the first flashing arrow sign. Lane closures shall not begin at top of crest vertical curve or on a horizontal curve.
10. All cones used for lane closures during the hours of darkness shall be fitted with retroreflective bands (or sleeves) as specified in the specifications.
11. Portable delineators, placed at one-half the spacing indicated for traffic cones may be used instead of cones for daytime closures only.
12. Unless otherwise specified in the special provisions, a minimum of 3 cones shall be placed transversely across each closed lane and shoulder at each location where a taper across a traffic lane ends and every 600 m as shown on the "Lane Closure" detail. Two Type II barricades may be used instead of the 3 cones. The transverse alignment of the cones or barricades on the closed shoulder may be shifted from the transverse alignment to provide access to the work.
13. Unless otherwise specified in the special provisions, the 500 m tangent shown along lane lines shall be used between the 300 m tapers required for each closed traffic lane.
14. Unless otherwise specified in the special provisions, the G84 (CA) and W4-1 signs shall be used as shown.
15. When specified in the special provisions, a W4-2 "LANE ENDS" symbol sign is to be used in place of the C20 (CA) "RIGHT LANE CLOSED AHEAD" sign.
16. The W4-2 "LANE ENDS" symbol sign shown at this location is to be used where the W4-2 sign is used as advance warning as described in Note 15.

SIGN PANEL SIZE (Min)

A	1200 mm x 1200 mm
B	1219 mm x 1219 mm
C	750 mm x 750 mm
D	762 mm x 762 mm
E	1372 mm x 1219 mm

LEGEND

- Traffic Cone
- Traffic Cone (optional taper)
- Temporary Sign
- Flashing Arrow Sign (FAS)
- FAS Support or Trailer
- Direction of Travel
- Portable Flashing Beacon

STATE OF CALIFORNIA
DEPARTMENT OF TRANSPORTATION

TRAFFIC CONTROL SYSTEM FOR LANE CLOSURE ON FREEWAYS AND EXPRESSWAYS

NO SCALE

ALL DIMENSIONS ARE IN MILLIMETERS UNLESS OTHERWISE SHOWN

RSP T10 DATED APRIL 28, 2005 SUPERSEDES STANDARD PLAN T10 DATED JULY 1, 2004-PAGE 218 OF THE STANDARD PLANS BOOK DATED JULY 2004.

REVISED STANDARD PLAN RSP T10

2004 REVISED Std PLAN RSP T10

TYPICAL RAMP CLOSURES

LEGEND

- Traffic Cone
- Temporary Sign
- Barricades
- Direction of Travel
- Turn Arrow

SIGN PANEL SIZE (Min)

A	1200 mm x 1200 mm
B	1200 mm x 750 mm
C	750 mm x 750 mm
D	762 mm x 762 mm
E	900 mm x 900 mm
F	1219 mm x 914 mm

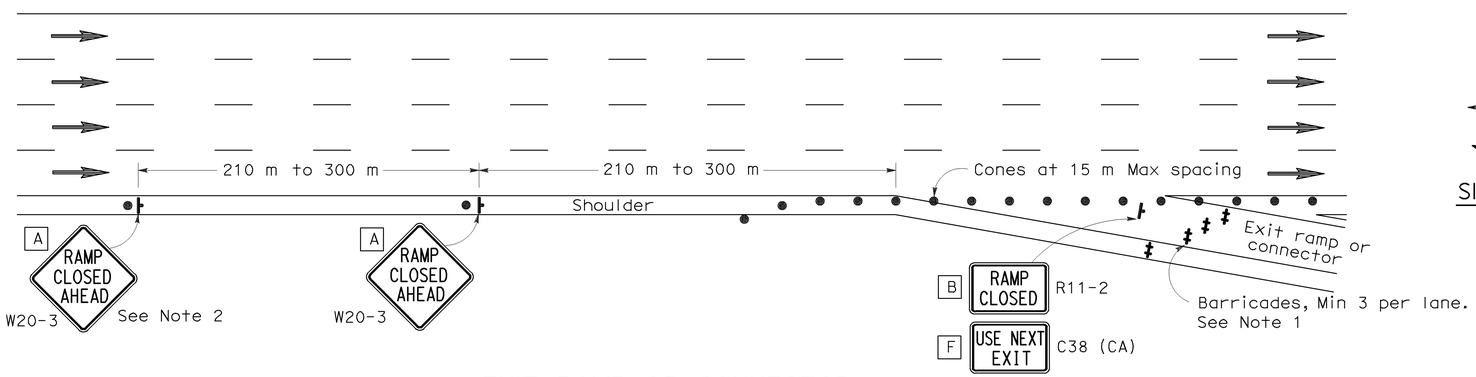

EXIT RAMP OR CONNECTOR

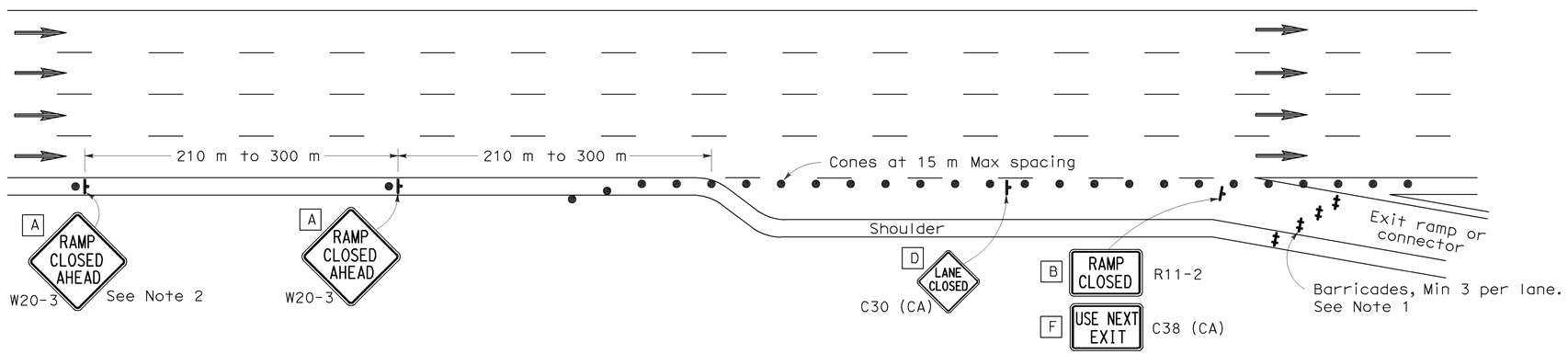

EXIT RAMP OR CONNECTOR WITH ADDITIONAL LANE

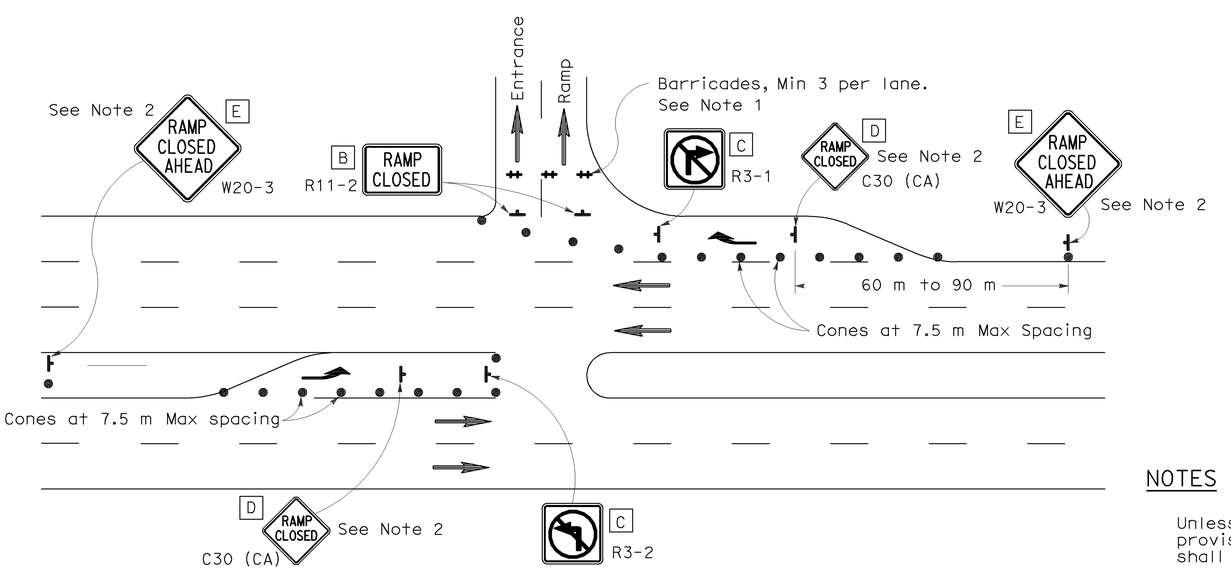

ENTRANCE RAMP WITH TURNING POCKETS

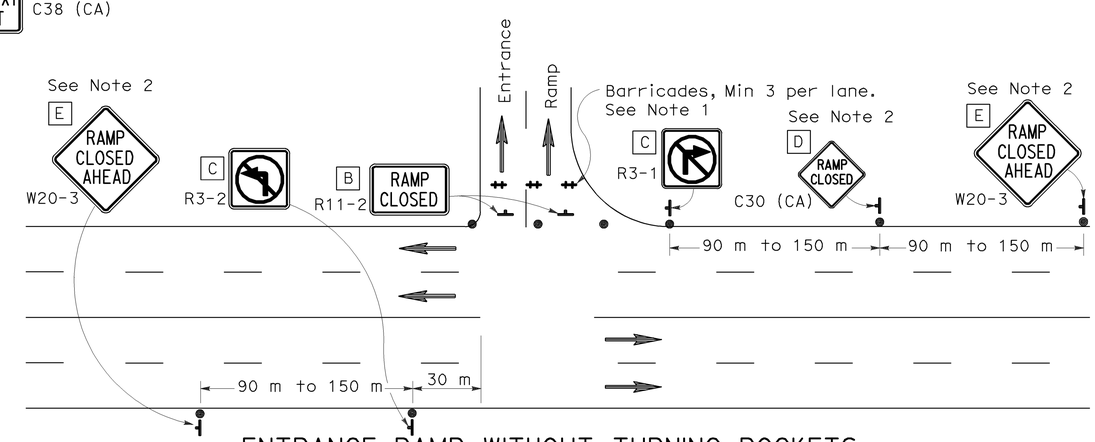

ENTRANCE RAMP WITHOUT TURNING POCKETS

NOTES

1. Barricades shall be Type I, II, or III for closures lasting one week or less and Type III for closures lasting longer than one week.
2. Instead of placing the W20-3 "RAMP CLOSED AHEAD" and C30 (CA) "RAMP CLOSED" signs, black on orange overlay plates with the word "CLOSED" may be mounted, as directed by the Engineer, on all guide signs that refer to the closed ramp. The letter size on the overlay shall be the same as the guide sign.
3. Each advance W20-3 "RAMP CLOSED AHEAD" sign shall be equipped with at least two flags for daytime closure. Each flag shall be at least 400 mm x 400 mm in size and shall be orange or fluorescent red-orange in color.
4. All cones used for ramp closures during the hours of darkness shall be fitted with retroreflective bands (or sleeves) as specified in the specifications.
5. Portable delineators, placed at one-half the spacing indicated for traffic cones, may be used instead of cones for daytime ramp closures only.
6. At least one person shall be assigned to provide full time maintenance of traffic control devices, unless otherwise directed by the Engineer.
7. The existing "EXIT" sign in the gore area shall be covered during ramp closures.

NOTES

Unless otherwise specified in the special provisions, all temporary warning signs shall have black legend on orange background.

California code are designated by (CA). Otherwise, Federal codes are shown.

DIST	COUNTY	ROUTE	KILOMETER POST TOTAL PROJECT	SHEET NO.	TOTAL SHEETS
03	Sut	99	T49.2/R51.8	88	88

Caltrans Metric

REGISTERED CIVIL ENGINEER

April 28, 2005
PLANS APPROVAL DATE

REGISTERED PROFESSIONAL ENGINEER
Greg W. Edwards
No. C36386
Exp. 6-30-06
CIVIL
STATE OF CALIFORNIA

The State of California or its officers or agents shall not be responsible for the accuracy or completeness of electronic copies of this plan sheet.

To get to the Caltrans web site, go to: http://www.dot.ca.gov

To accompany plans dated July 26, 2010

STATE OF CALIFORNIA
DEPARTMENT OF TRANSPORTATION

TRAFFIC CONTROL SYSTEM FOR RAMP CLOSURE

NO SCALE

ALL DIMENSIONS ARE IN MILLIMETERS UNLESS OTHERWISE SHOWN

RSP T14 DATED APRIL 28, 2005 SUPERSEDES STANDARD PLAN T14 DATED JULY 1, 2004-PAGE 223 OF THE STANDARD PLANS BOOK DATED JULY 2004.

REVISED STANDARD PLAN RSP T14

2004 REVISED Std PLAN RSP T14