Dist	COUNTY	ROUTE	POST MILES TOTAL PROJECT	SHEET No.	TOTAL SHEETS
03	Nev	20	R4.1/R17.4	1	106

STATE OF CALIFORNIA

DEPARTMENT OF TRANSPORTATION

PROJECT PLANS FOR CONSTRUCTION ON

STATE HIGHWAY

IN NEVADA COUNTY AT VARIOUS LOCATIONS FROM 0.6 MILE EAST OF OAK CANYON DRIVE TO THE NORTH JUNCTION OF STATE ROUTE 49

TO BE SUPPLEMENTED BY STANDARD PLANS DATED MAY 2006

INDEX OF PLANS

SHEET No.	DESCRIPTION
1	TITLE AND LOCATION MAP
2-11	TYPICAL CROSS SECTIONS
12-21	CONSTRUCTION DETAILS
22-35	DRAINAGE PROFILES AND QUANTITIES
36-38	CONSTRUCTION AREA SIGNS
39-41	PAVEMENT DELINEATION QUANTITIES
42-50	SIGN DETAILS AND QUANTITIES
51-54	SUMMARY OF QUANTITIES
55-67	LANDSCAPE DETAILS
68-87	ELECTRICAL PLANS
88-106	NEW AND REVISED STANDARD PLANS

THE STANDARD PLANS LIST APPLICABLE TO THIS CONTRACT IS INCLUDED IN THE NOTICE TO BIDDERS AND SPECIAL PROVISIONS BOOK.

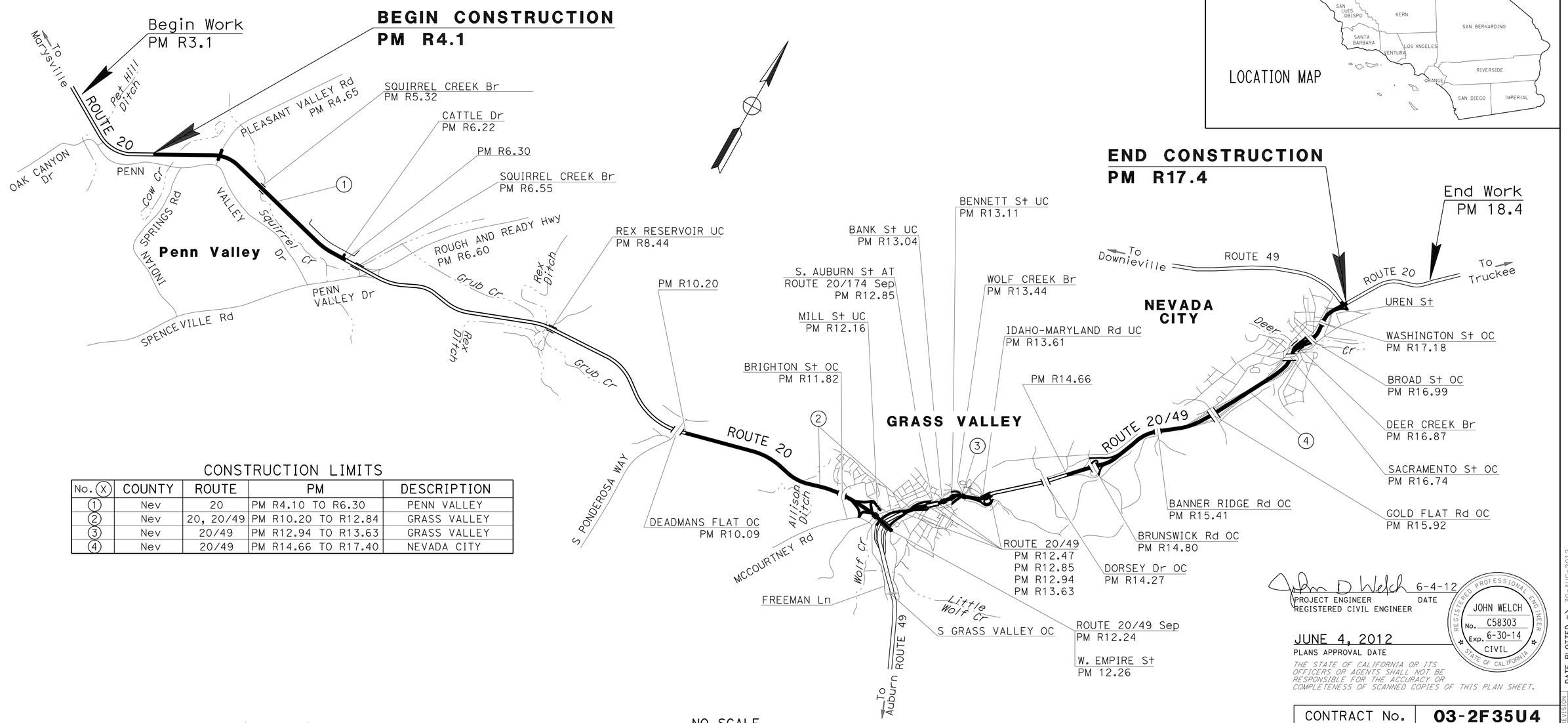

CONSTRUCTION LIMITS

No. (X)	COUNTY	ROUTE	PM	DESCRIPTION
1	Nev	20	PM R4.10 TO R6.30	PENN VALLEY
2	Nev	20, 20/49	PM R10.20 TO R12.84	GRASS VALLEY
3	Nev	20/49	PM R12.94 TO R13.63	GRASS VALLEY
4	Nev	20/49	PM R14.66 TO R17.40	NEVADA CITY

NO SCALE

THE CONTRACTOR SHALL POSSESS THE CLASS (OR CLASSES) OF LICENSE AS SPECIFIED IN THE "NOTICE TO BIDDERS."

John D Welch 6-4-12
PROJECT ENGINEER DATE
REGISTERED CIVIL ENGINEER

REGISTERED PROFESSIONAL ENGINEER
JOHN WELCH
No. C58303
Exp. 6-30-14
CIVIL
STATE OF CALIFORNIA

JUNE 4, 2012
PLANS APPROVAL DATE

THE STATE OF CALIFORNIA OR ITS OFFICERS OR AGENTS SHALL NOT BE RESPONSIBLE FOR THE ACCURACY OR COMPLETENESS OF SCANNED COPIES OF THIS PLAN SHEET.

PROJECT MANAGER W. BAJWA
DESIGN ENGINEER M. ALVANDI

CONTRACT No.	03-2F35U4
PROJECT ID	0300020592

LAST REVISION 05-28-12
DATE PLOTTED => 30-AUG-2012
TIME PLOTTED => 09:08

Dist	COUNTY	ROUTE	POST MILES TOTAL PROJECT	SHEET No.	TOTAL SHEETS
03	Nev	20	R4.1/R17.4	2	106

REGISTERED CIVIL ENGINEER 6-4-12 DATE

6-4-12
PLANS APPROVAL DATE

REGISTERED PROFESSIONAL ENGINEER JOHN D. WELCH No. 58303 Exp. 6-30-14 CIVIL STATE OF CALIFORNIA

THE STATE OF CALIFORNIA OR ITS OFFICERS OR AGENTS SHALL NOT BE RESPONSIBLE FOR THE ACCURACY OR COMPLETENESS OF SCANNED COPIES OF THIS PLAN SHEET.

NOTES:

1. FOR ACCURATE RIGHT OF WAY AND ACCESS DATA, CONTACT RIGHT OF WAY ENGINEERING AT THE DISTRICT OFFICE.
2. DIMENSIONS OF THE PAVEMENT STRUCTURES (STRUCTURAL SECTIONS) ARE SUBJECT TO TOLERANCES SPECIFIED IN THE STANDARD SPECIFICATIONS.
3. FOR COLD PLANE AC Pvmt LIMITS AT INTERSECTIONS, SEE CONSTRUCTION DETAILS.
4. RHMA-O TO BE PLACED 2′ PAST ETW EXCEPT ON HIGH SIDE OF SUPER WHERE RHMA-O SHALL EXTEND TO THE EDGE OF PAVEMENT.
5. TAPER RHMA-O FROM 0.10′ TO 0.05′.
6. COLD PLANE AC Pvmt and REMOVE AC SURFACING 1′ AWAY FROM FACE OF Exist MBGR, DIKE, AND CB EXCEPT AS SHOWN FOR REMOVAL IN CONSTRUCTION DETAILS AND QUANTITIES.
7. ASPHALTIC EMULSION (FOG SEAL COAT) TO BE APPLIED TO AREAS IDENTIFIED UNDER NOTE 6 OF THIS SHEET.
8. EXACT LOCATIONS AND TYPE OF HMA DIKE ARE SHOWN ON THE SUMMARY OF QUANTITIES SHEETS.
9. CRACK TREATMENT OCCURS AFTER COLD PLANE AC Pvmt.
10. REPLACE AC SURFACING OCCURS AFTER COLD PLANE AC Pvmt.

ABBREVIATIONS:

LL = LANE LINE
RHMA-G = RUBBERIZED HOT MIX ASPHALT (GAP GRADED)
RHMA-O = RUBBERIZED HOT MIX ASPHALT (OPEN GRADED)
SB = SHOULDER BACKING

DESIGN DESIGNATION:

2010 ADT = 48,000 D = 59%
2013 ADT = 51,600 T = 5.0 %
DHV (2013) = 5,570 V = 55 MPH
$T.I_{10}$ = 11.0

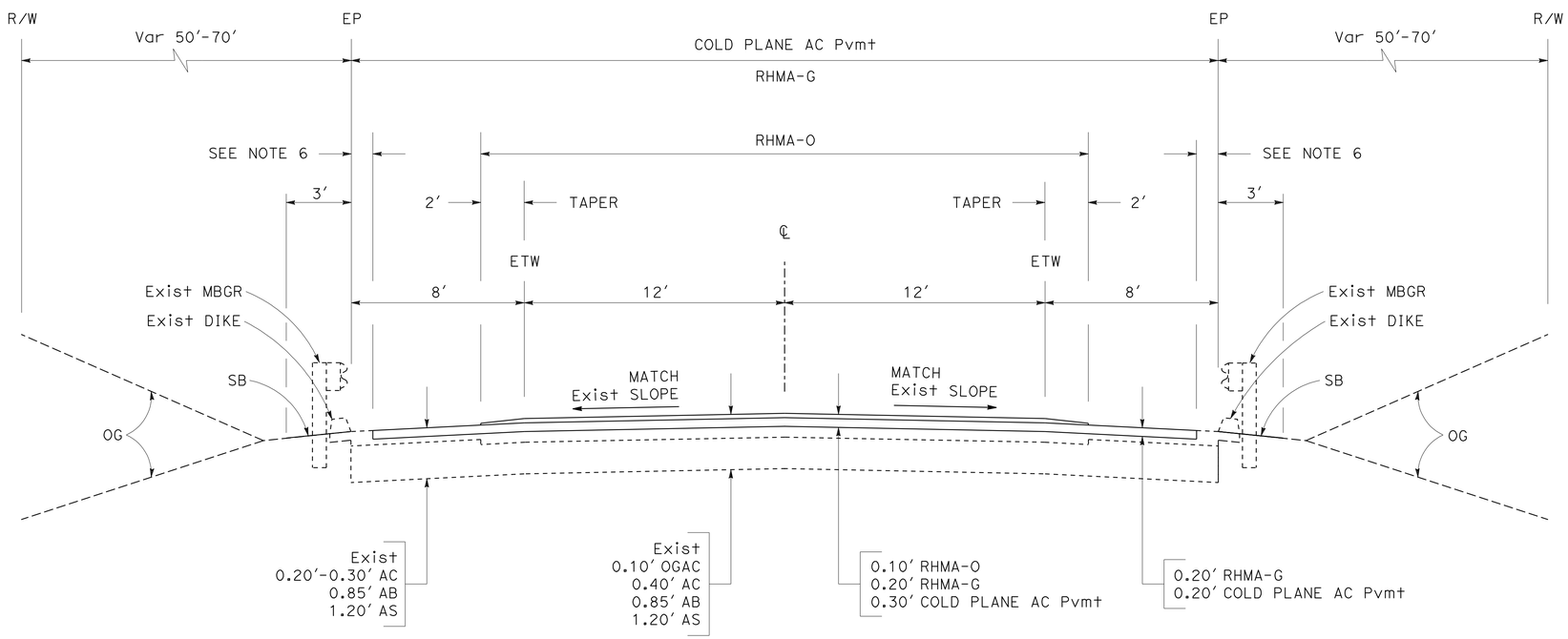

ROUTE 20
PM R4.10 TO R4.53
PM R4.75 TO R5.32
PM R5.35 TO R6.11
PM R6.28 TO R6.30

TYPICAL CROSS SECTIONS

NO SCALE

X-1

STATE OF CALIFORNIA - DEPARTMENT OF TRANSPORTATION
Caltrans® DIVISION OF ENGINEERING

FUNCTIONAL SUPERVISOR: MASTRI ALVANDI
CALCULATED-DESIGNED BY: JOHN WELCH
CHECKED BY: DAVINDER MINHAS
REVISED BY
DATE REVISED

LAST REVISION 3-27-12
DATE PLOTTED => 30-AUG-2012
TIME PLOTTED => 09:08

Dist	COUNTY	ROUTE	POST MILES TOTAL PROJECT	SHEET No.	TOTAL SHEETS
03	Nev	20	R4.1/R17.4	3	106

REGISTERED CIVIL ENGINEER 6-4-12 DATE

6-4-12
PLANS APPROVAL DATE

REGISTERED PROFESSIONAL ENGINEER JOHN D. WELCH No. 58303 Exp. 6-30-14 CIVIL STATE OF CALIFORNIA

THE STATE OF CALIFORNIA OR ITS OFFICERS OR AGENTS SHALL NOT BE RESPONSIBLE FOR THE ACCURACY OR COMPLETENESS OF SCANNED COPIES OF THIS PLAN SHEET.

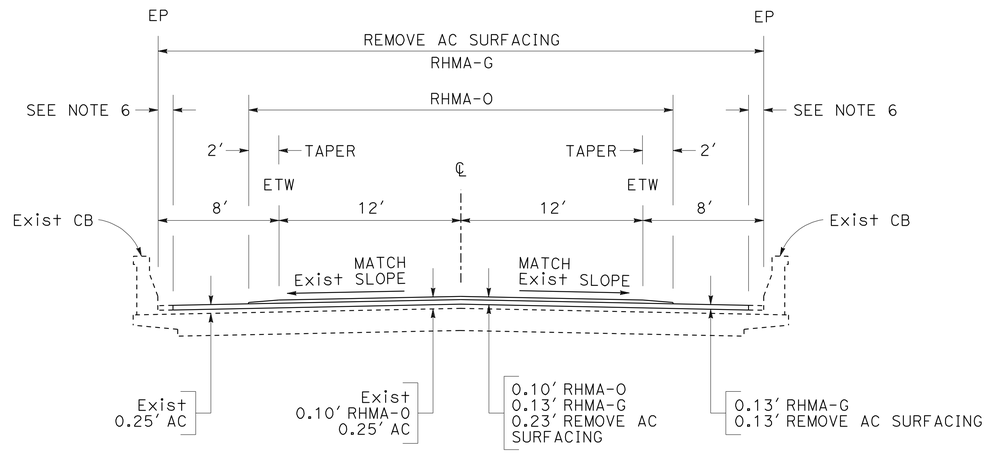

ROUTE 20

PM R5.32 TO R5.35
AT SQUIRREL CREEK BRIDGE

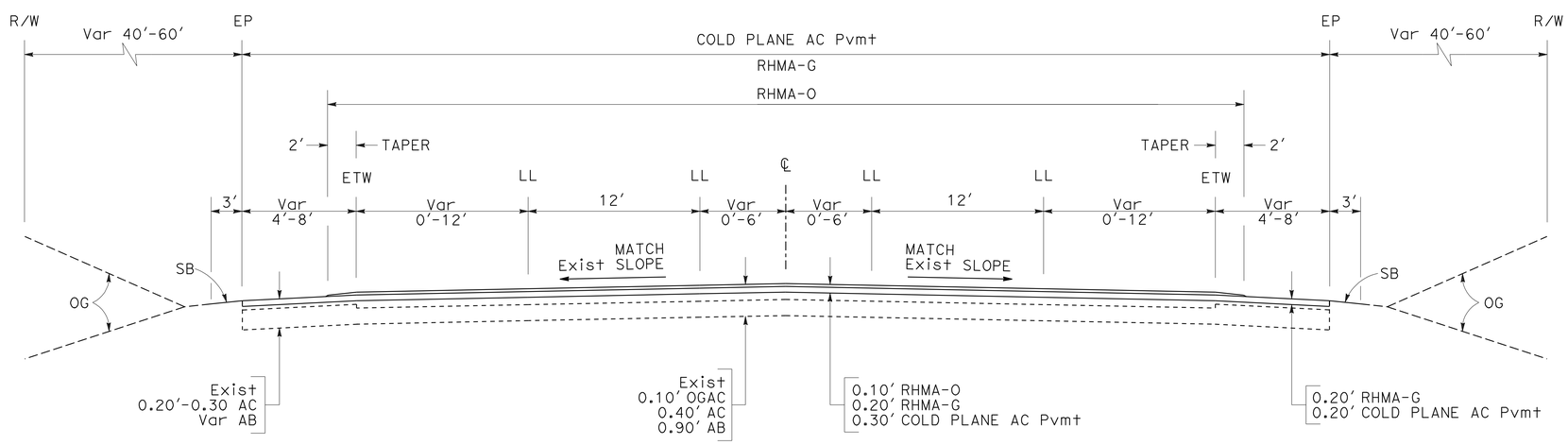

ROUTE 20

PM R4.53 TO R4.75
AT PLEASANT VALLEY ROAD

TYPICAL CROSS SECTIONS

NO SCALE

X-2

STATE OF CALIFORNIA - DEPARTMENT OF TRANSPORTATION
Caltrans® DIVISION OF ENGINEERING

FUNCTIONAL SUPERVISOR: MASTRI ALVANDI
CALCULATED-DESIGNED BY: JOHN WELCH
CHECKED BY: DAVINDER MINHAS
REVISED BY
DATE REVISED

LAST REVISION 3-27-12
DATE PLOTTED => 30-AUG-2012
TIME PLOTTED => 09:08

Dist	COUNTY	ROUTE	POST MILES TOTAL PROJECT	SHEET No.	TOTAL SHEETS
03	Nev	20	R4.1/R17.4	4	106

REGISTERED CIVIL ENGINEER 6-4-12 DATE

6-4-12
PLANS APPROVAL DATE

REGISTERED PROFESSIONAL ENGINEER JOHN D. WELCH No. 58303 Exp. 6-30-14 CIVIL STATE OF CALIFORNIA

THE STATE OF CALIFORNIA OR ITS OFFICERS OR AGENTS SHALL NOT BE RESPONSIBLE FOR THE ACCURACY OR COMPLETENESS OF SCANNED COPIES OF THIS PLAN SHEET.

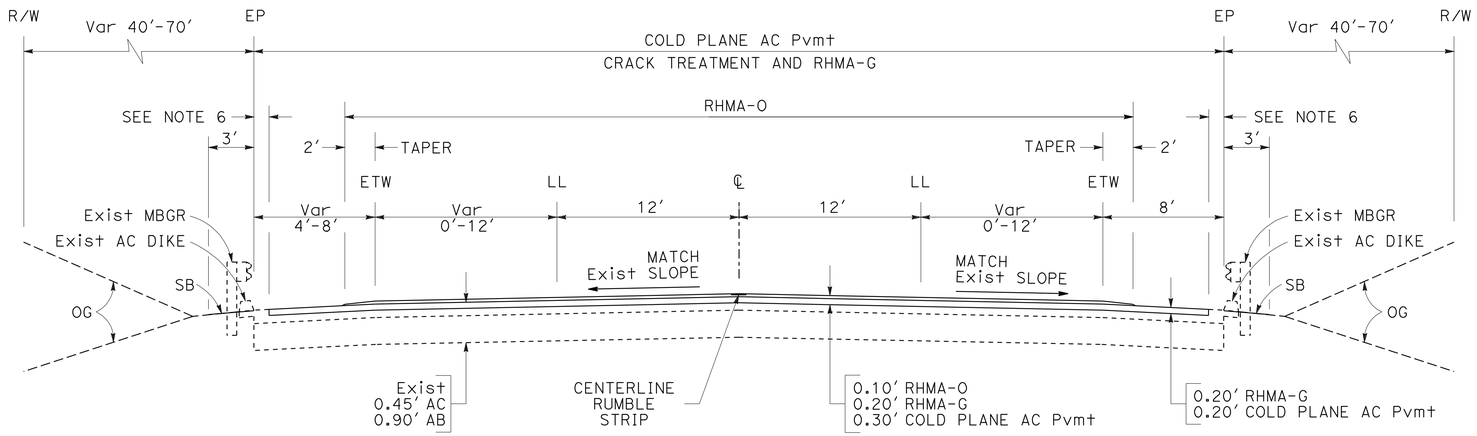

ROUTE 20

PM R10.20 TO R11.82
TO BRIGHTON STREET OVERCROSSING

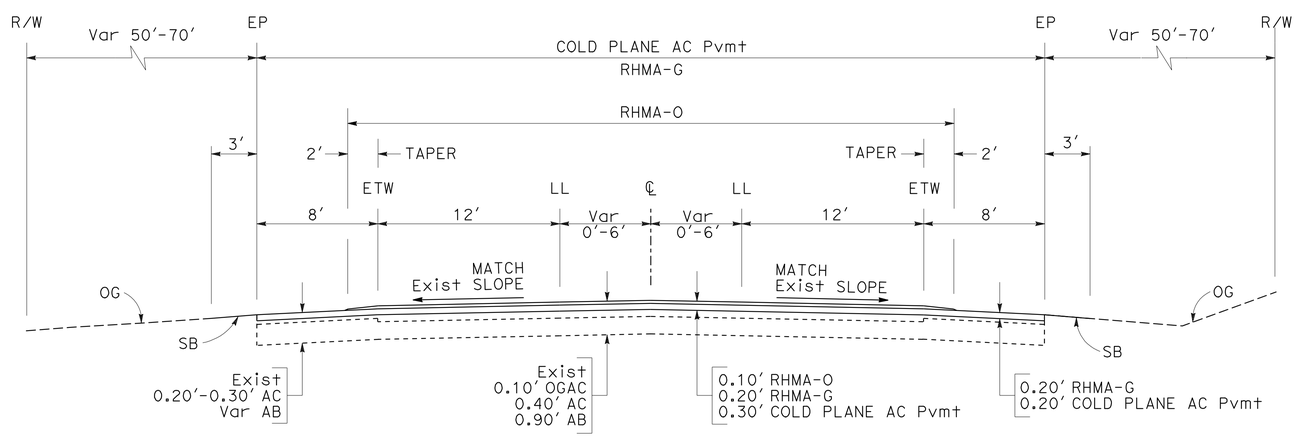

ROUTE 20

PM R6.11 TO R6.28
AT CATTLE DRIVE

TYPICAL CROSS SECTIONS

NO SCALE

X-3

STATE OF CALIFORNIA - DEPARTMENT OF TRANSPORTATION
Caltrans DIVISION OF ENGINEERING

FUNCTIONAL SUPERVISOR: MASTRI ALVANDI
CALCULATED-DESIGNED BY: JOHN WELCH
CHECKED BY: DAVINDER MINHAS
REVISED BY
DATE REVISED

LAST REVISION 3-27-12
DATE PLOTTED => 30-AUG-2012
TIME PLOTTED => 09:08

Dist	COUNTY	ROUTE	POST MILES TOTAL PROJECT	SHEET No.	TOTAL SHEETS
03	Nev	20	R4.1/R17.4	5	106

John D Welch 6-4-12
REGISTERED CIVIL ENGINEER DATE

6-4-12
PLANS APPROVAL DATE

REGISTERED PROFESSIONAL ENGINEER
JOHN D. WELCH
No. 58303
Exp. 6-30-14
CIVIL
STATE OF CALIFORNIA

THE STATE OF CALIFORNIA OR ITS OFFICERS OR AGENTS SHALL NOT BE RESPONSIBLE FOR THE ACCURACY OR COMPLETENESS OF SCANNED COPIES OF THIS PLAN SHEET.

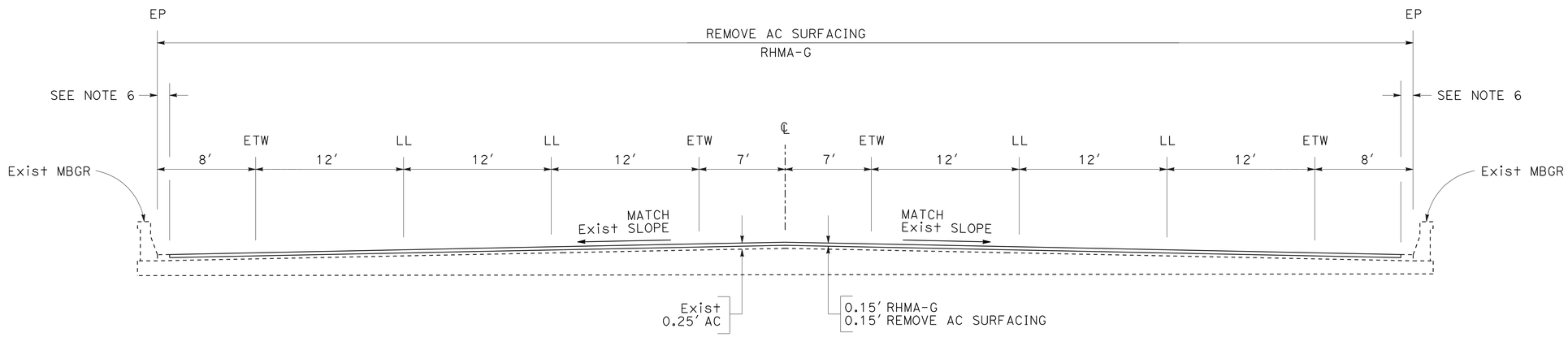

ROUTE 20

PM R12.16 TO R12.18
MILL STREET UNDERCROSSING

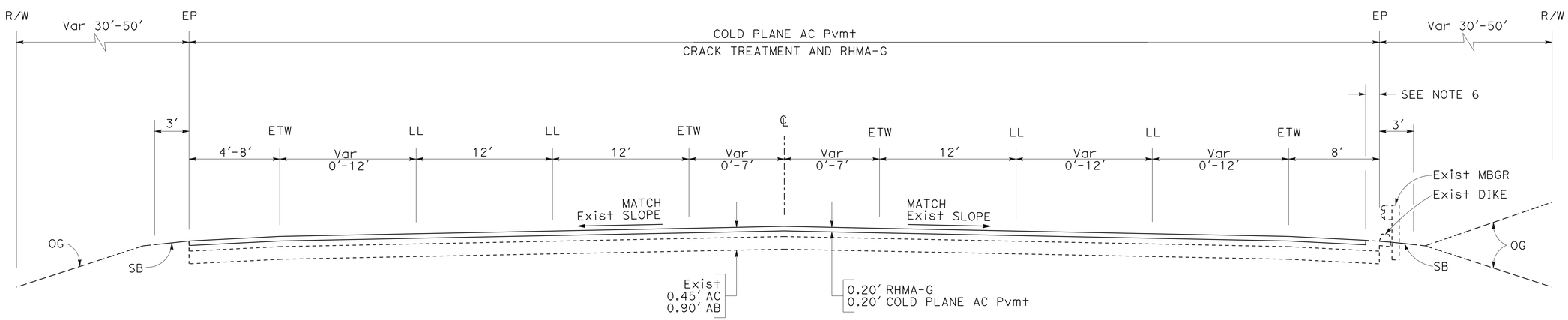

ROUTE 20

PM R11.82 TO R12.16
NEAR McCOURTNEY AND MILL STREET RAMPS

TYPICAL CROSS SECTIONS

NO SCALE

X-4

STATE OF CALIFORNIA - DEPARTMENT OF TRANSPORTATION
Caltrans® DIVISION OF ENGINEERING

FUNCTIONAL SUPERVISOR: MASTRI ALVANDI
CALCULATED-DESIGNED BY: JOHN WELCH
CHECKED BY: DAVINDER MINHAS
REVISED BY
DATE REVISED

LAST REVISION 3-27-12
DATE PLOTTED => 30-AUG-2012
TIME PLOTTED => 09:08

Dist	COUNTY	ROUTE	POST MILES TOTAL PROJECT	SHEET No.	TOTAL SHEETS
03	Nev	20	R4.1/R17.4	6	106

REGISTERED CIVIL ENGINEER 6-4-12 DATE

6-4-12
PLANS APPROVAL DATE

REGISTERED PROFESSIONAL ENGINEER JOHN D. WELCH No. 58303 Exp. 6-30-14 CIVIL STATE OF CALIFORNIA

THE STATE OF CALIFORNIA OR ITS OFFICERS OR AGENTS SHALL NOT BE RESPONSIBLE FOR THE ACCURACY OR COMPLETENESS OF SCANNED COPIES OF THIS PLAN SHEET.

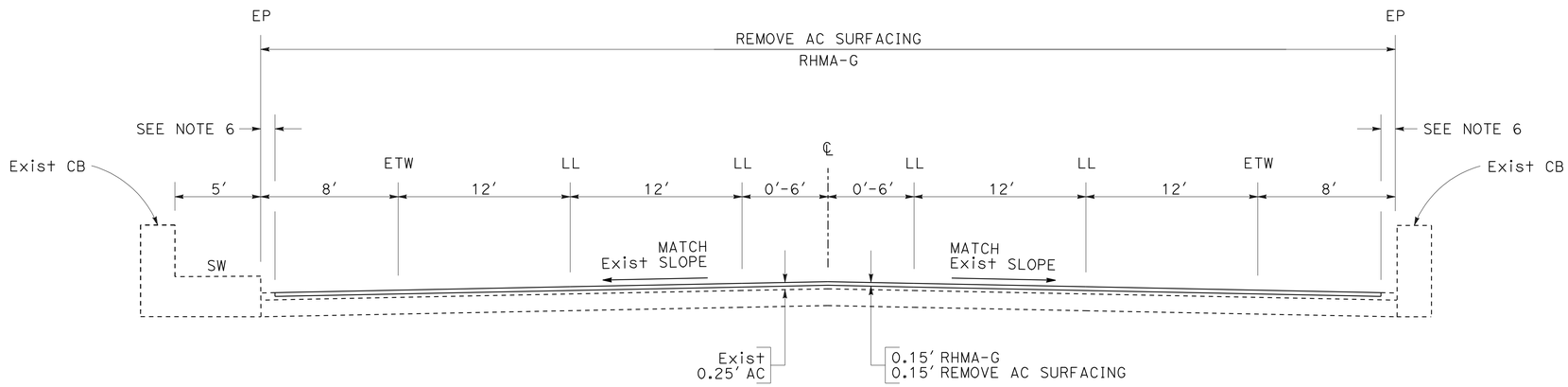

ROUTE 20

PM R12.24 TO R12.25
20/49 SEPARATION

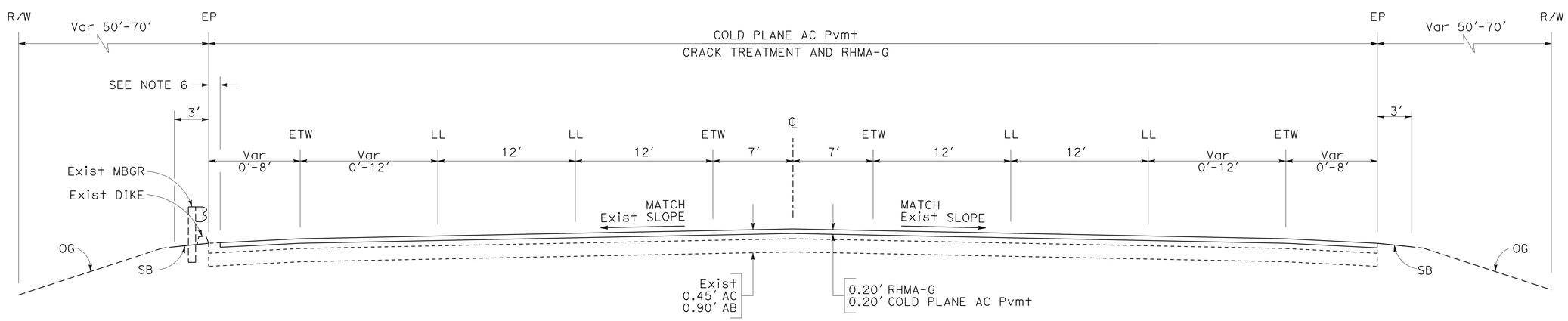

ROUTE 20

PM R12.18 TO R12.24
BETWEEN MILL STREET UNDERCROSSING AND 20/49 SEPARATION

TYPICAL CROSS SECTIONS

NO SCALE

X-5

STATE OF CALIFORNIA - DEPARTMENT OF TRANSPORTATION
Caltrans® DIVISION OF ENGINEERING

FUNCTIONAL SUPERVISOR: MASTRI ALVANDI
CALCULATED-DESIGNED BY: JOHN WELCH
CHECKED BY: DAVINDER MINHAS
REVISED BY
DATE REVISED

LAST REVISION 3-27-12
DATE PLOTTED => 30-AUG-2012
TIME PLOTTED => 09:08

Dist	COUNTY	ROUTE	POST MILES TOTAL PROJECT	SHEET No.	TOTAL SHEETS
03	Nev	20	R4.1/R17.4	7	106

John D Welch 6-4-12
REGISTERED CIVIL ENGINEER DATE

6-4-12
PLANS APPROVAL DATE

REGISTERED PROFESSIONAL ENGINEER JOHN D. WELCH No. 58303 Exp. 6-30-14 CIVIL STATE OF CALIFORNIA

THE STATE OF CALIFORNIA OR ITS OFFICERS OR AGENTS SHALL NOT BE RESPONSIBLE FOR THE ACCURACY OR COMPLETENESS OF SCANNED COPIES OF THIS PLAN SHEET.

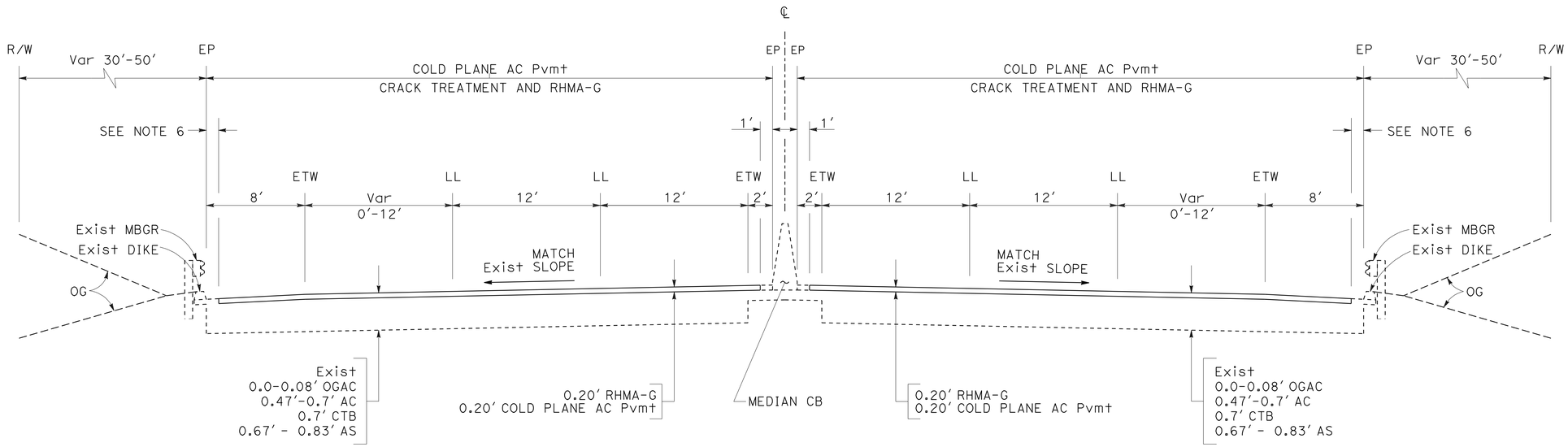

ROUTE 20/49

PM R12.47 TO R12.84
FROM GORE AT EB 20/49 ON RAMP
TO 20/174 SEPARATION

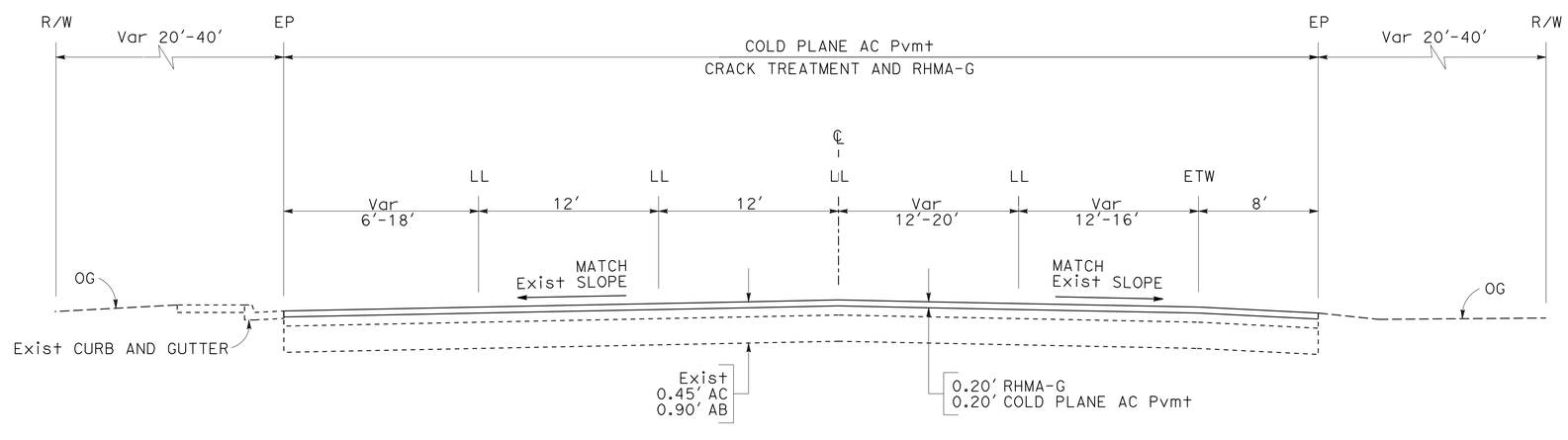

ROUTE 20

PM R12.25 EAST ONTO
W. EMPIRE STREET

TYPICAL CROSS SECTIONS

NO SCALE

X-6

REVISED BY | DATE REVISED
JOHN WELCH | DAVINDER MINHAS
CALCULATED-DESIGNED BY | CHECKED BY
FUNCTIONAL SUPERVISOR
MASTRI ALVANDI

STATE OF CALIFORNIA - DEPARTMENT OF TRANSPORTATION
Caltrans® DIVISION OF ENGINEERING

LAST REVISION 3-27-12 | DATE PLOTTED => 30-AUG-2012 | TIME PLOTTED => 09:08

Dist	COUNTY	ROUTE	POST MILES TOTAL PROJECT	SHEET No.	TOTAL SHEETS
03	Nev	20	R4.1/R17.4	8	106

REGISTERED CIVIL ENGINEER 6-4-12 DATE

6-4-12
PLANS APPROVAL DATE

REGISTERED PROFESSIONAL ENGINEER JOHN D. WELCH No. 58303 Exp. 6-30-14 CIVIL STATE OF CALIFORNIA

THE STATE OF CALIFORNIA OR ITS OFFICERS OR AGENTS SHALL NOT BE RESPONSIBLE FOR THE ACCURACY OR COMPLETENESS OF SCANNED COPIES OF THIS PLAN SHEET.

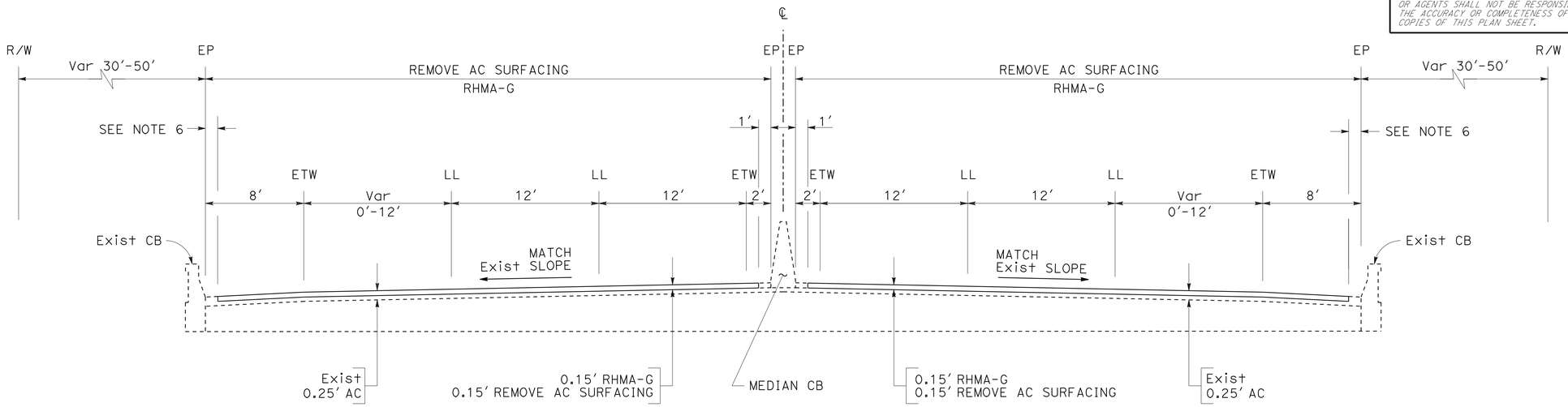

ROUTE 20/49

UNDERCROSSINGS:
PM R13.04 TO R13.07
PM R13.11 TO R13.14
PM R13.61 TO R13.63

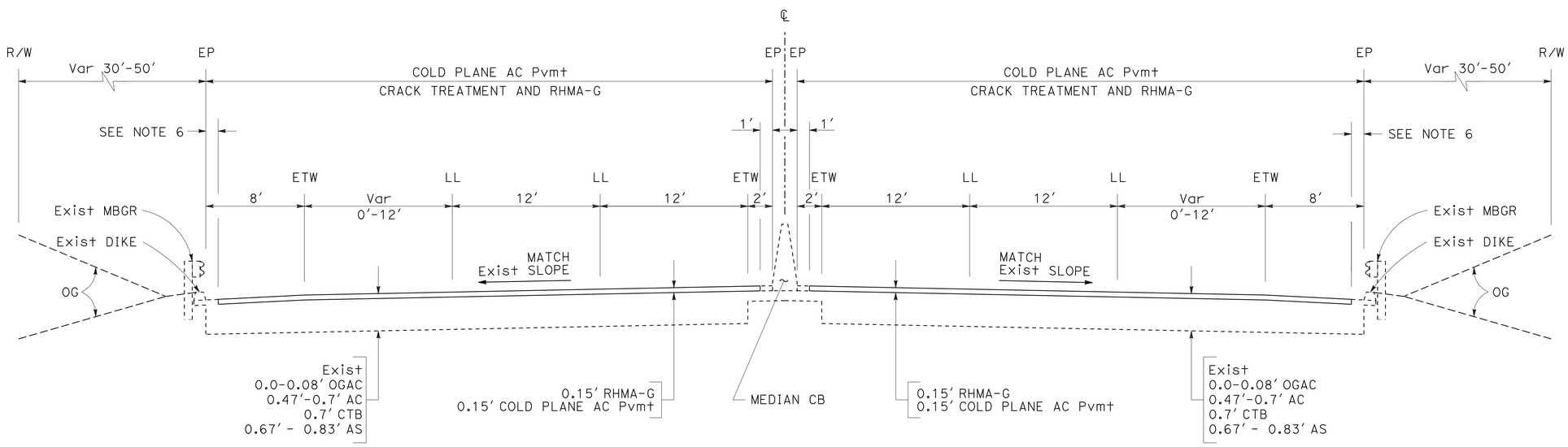

ROUTE 20/49

PM R12.94 TO R13.04
PM R13.07 TO R13.11
PM R13.14 TO R13.61

TYPICAL CROSS SECTIONS

NO SCALE

X-7

STATE OF CALIFORNIA - DEPARTMENT OF TRANSPORTATION
Caltrans® DIVISION OF ENGINEERING

FUNCTIONAL SUPERVISOR: MASTRI ALVANDI
CALCULATED-DESIGNED BY: JOHN WELCH
CHECKED BY: DAVINDER MINHAS
REVISED BY / DATE REVISED

LAST REVISION 3-27-12
DATE PLOTTED => 30-AUG-2012
TIME PLOTTED => 09:08

Dist	COUNTY	ROUTE	POST MILES TOTAL PROJECT	SHEET No.	TOTAL SHEETS
03	Nev	20	R4.1/R17.4	9	106

John D Welch 6-4-12
REGISTERED CIVIL ENGINEER DATE

6-4-12
PLANS APPROVAL DATE

REGISTERED PROFESSIONAL ENGINEER
JOHN D. WELCH
No. 58303
Exp. 6-30-14
CIVIL
STATE OF CALIFORNIA

THE STATE OF CALIFORNIA OR ITS OFFICERS OR AGENTS SHALL NOT BE RESPONSIBLE FOR THE ACCURACY OR COMPLETENESS OF SCANNED COPIES OF THIS PLAN SHEET.

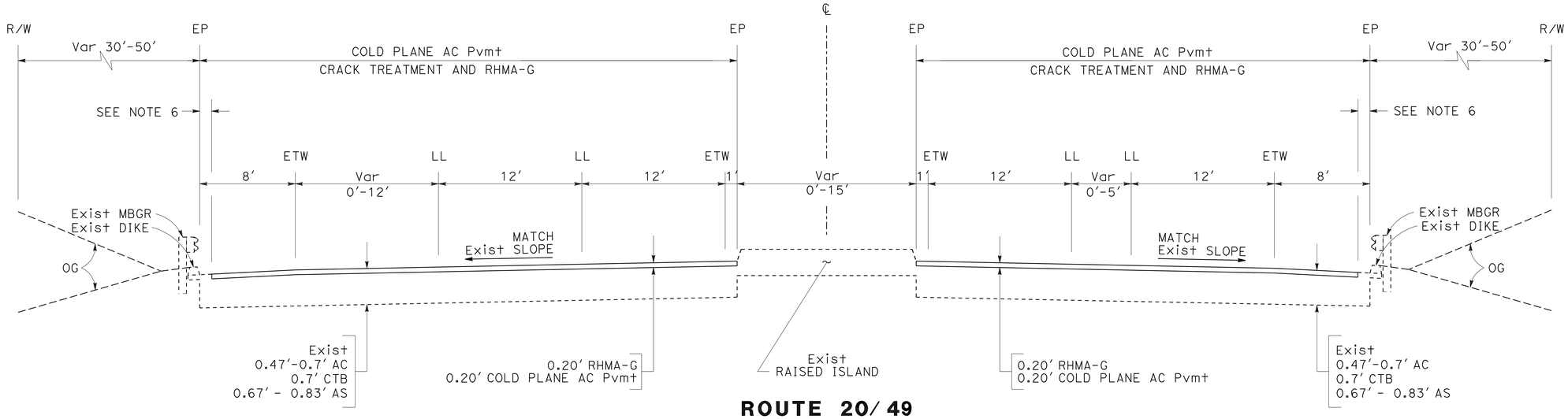

ROUTE 20/49

PM R16.57 TO R16.86
PM R16.90 TO R17.33

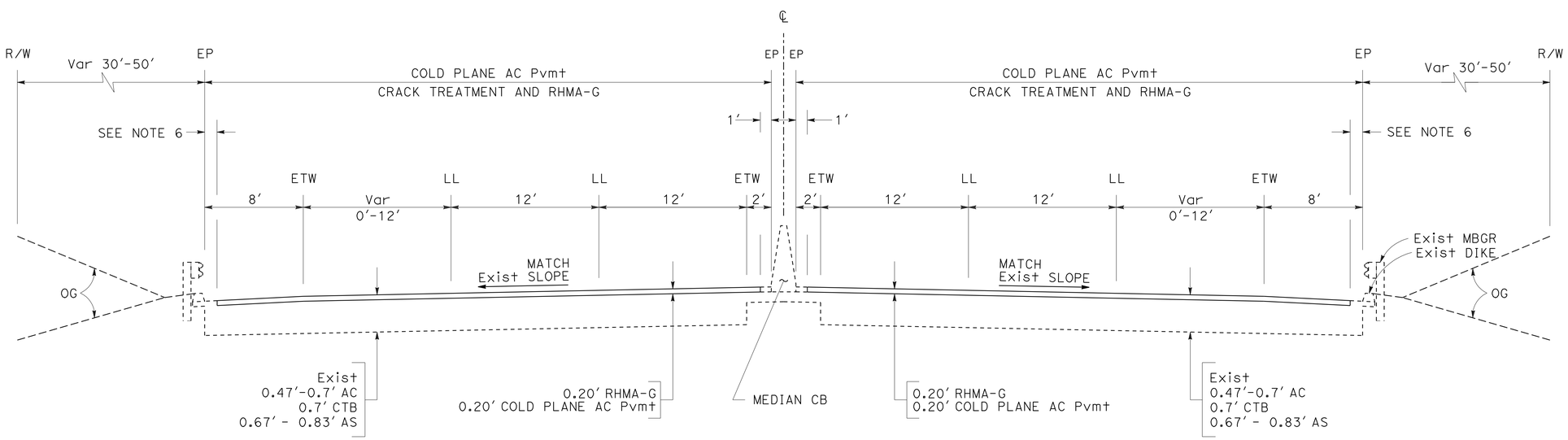

ROUTE 20/49

PM R14.66 TO R16.57

TYPICAL CROSS SECTIONS

NO SCALE

X-8

STATE OF CALIFORNIA - DEPARTMENT OF TRANSPORTATION
Caltrans® DIVISION OF ENGINEERING

FUNCTIONAL SUPERVISOR: MASTRI ALVANDI
CALCULATED-DESIGNED BY: JOHN WELCH
CHECKED BY: DAVINDER MINHAS
REVISED BY
DATE REVISED

LAST REVISION 3-27-12
DATE PLOTTED => 30-AUG-2012
TIME PLOTTED => 09:08

Dist	COUNTY	ROUTE	POST MILES TOTAL PROJECT	SHEET No.	TOTAL SHEETS
03	Nev	20	R4.1/R17.4	10	106

REGISTERED CIVIL ENGINEER 6-4-12 DATE

6-4-12
PLANS APPROVAL DATE

REGISTERED PROFESSIONAL ENGINEER JOHN D. WELCH No. 58303 Exp. 6-30-14 CIVIL STATE OF CALIFORNIA

THE STATE OF CALIFORNIA OR ITS OFFICERS OR AGENTS SHALL NOT BE RESPONSIBLE FOR THE ACCURACY OR COMPLETENESS OF SCANNED COPIES OF THIS PLAN SHEET.

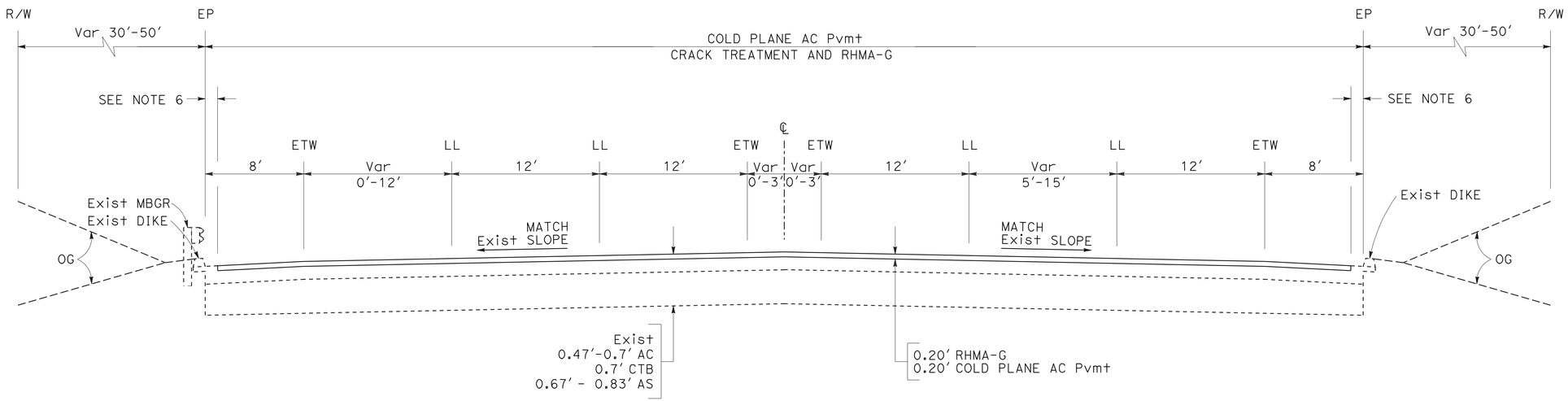

ROUTE 20/49

PM R17.33 TO R17.40

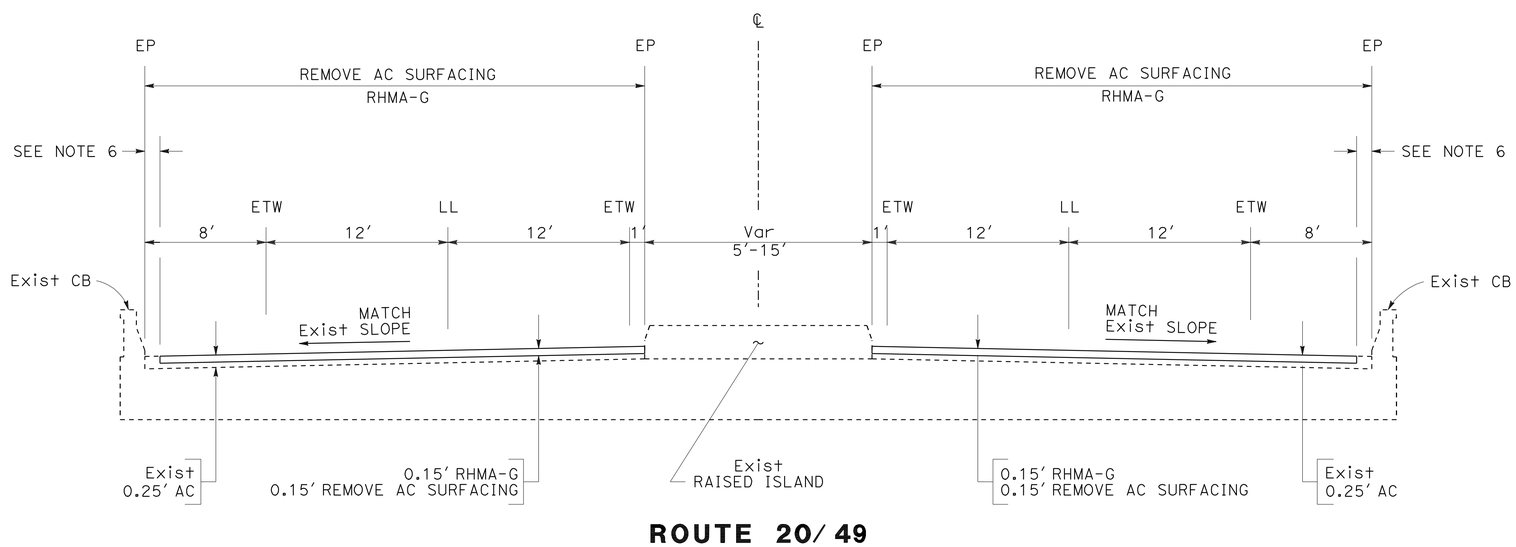

ROUTE 20/49

PM R16.86 TO R16.90
AT DEER CREEK BRIDGE

TYPICAL CROSS SECTIONS

NO SCALE

X-9

STATE OF CALIFORNIA - DEPARTMENT OF TRANSPORTATION
Caltrans DIVISION OF ENGINEERING

FUNCTIONAL SUPERVISOR: MASTRI ALVANDI
CALCULATED-DESIGNED BY: JOHN WELCH
CHECKED BY: DAVINDER MINHAS
REVISED BY / DATE REVISED

LAST REVISION 3-27-12
DATE PLOTTED => 30-AUG-2012
TIME PLOTTED => 09:08

Dist	COUNTY	ROUTE	POST MILES TOTAL PROJECT	SHEET No.	TOTAL SHEETS
03	Nev	20	R4.1/R17.4	11	106

REGISTERED CIVIL ENGINEER 6-4-12 DATE

6-4-12
PLANS APPROVAL DATE

REGISTERED PROFESSIONAL ENGINEER JOHN D. WELCH No. 58303 Exp. 6-30-14 CIVIL STATE OF CALIFORNIA

THE STATE OF CALIFORNIA OR ITS OFFICERS OR AGENTS SHALL NOT BE RESPONSIBLE FOR THE ACCURACY OR COMPLETENESS OF SCANNED COPIES OF THIS PLAN SHEET.

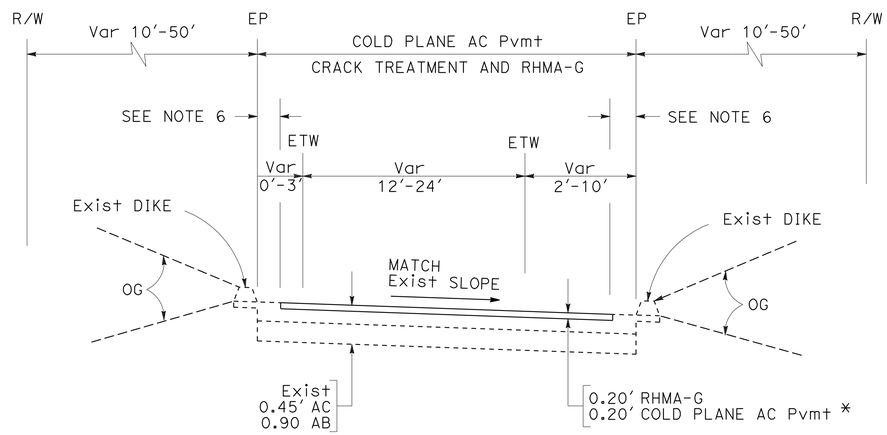

* 0.15' REMOVE AC SURFACING and 0.15' RHMA-G ON BRIDGES AT EB OFF-RAMP TO BROAD St AND WB ON-RAMP FROM BROAD St

CONFORM TO LOCAL STREETS (SEE SHEET C-9)

1. EB OFF-RAMP TO MCCOURTNEY Rd
2. EB ON-RAMP FROM MCCOURTNEY Rd
3. WB ON-RAMP FROM MILL St
4. WB OFF-RAMP TO MILL St
5. EB OFF-RAMP TO S. AUBURN St
6. WB ON-RAMP FROM S. AUBURN St
7. EB ON-RAMP FROM BENNETT St
8. WB OFF-RAMP TO BENNETT St
9. EB OFF-RAMP TO IDAHO-MARYLAND Rd
10. EB LOOP ON-RAMP FROM IDAHO-MARYLAND Rd
11. EB DIRECT ON-RAMP FROM BRUNSWICK Rd
12. WB LOOP ON-RAMP FROM BRUNSWICK Rd
13. WB OFF-RAMP TO BRUNSWICK Rd
14. EB OFF-RAMP TO BROAD St *
15. WB ON-RAMP FROM BROAD St *
16. EB OFF-RAMP TO UREN St

CONFORM TO END OF AC PAVED GORE (SEE SHEET C-9)

1. WB ON-RAMP FROM IDAHO-MARYLAND Rd
2. WB OFF-RAMP TO IDAHO-MARYLAND Rd
3. EB OFF-RAMP TO BRUNSWICK Rd
4. WB DIRECT ON-RAMP FROM BRUNSWICK Rd
5. EB LOOP ON-RAMP FROM BRUNSWICK Rd
6. EB OFF-RAMP TO GOLD FLAT Rd
7. WB ON-RAMP FROM GOLD FLAT Rd
8. EB ON-RAMP FROM GOLD FLAT Rd
9. WB OFF-RAMP TO GOLD FLAT Rd
10. EB OFF-RAMP TO SACRAMENTO St
11. WB ON-RAMP FROM SACRAMENTO St
12. EB ON-RAMP FROM WASHINGTON St
13. WB ON-RAMP FROM COYOTE St
14. EB OFF-RAMP TO COYOTE St

RAMPS AT 20/49 SEPARATION (SEE SHEET C-8)

1. EB OFF-RAMP TO SB 49 AT SEPARATION - FIRST 130' DOWN RAMP
2. WB 20/49 TO WB 20 - FULL LENGTH
3. EB 20 TO EB 20/49 - FULL LENGTH
4. NB 49 TO EB 20/49 - NO WORK ON THIS RAMP

TYPICAL CROSS SECTIONS

NO SCALE

X-10

REVISED BY | DATE REVISED
JOHN WELCH | DAVINDER MINHAS
CALCULATED-DESIGNED BY | CHECKED BY
FUNCTIONAL SUPERVISOR: MASTRI ALVANDI
STATE OF CALIFORNIA - DEPARTMENT OF TRANSPORTATION
Caltrans DIVISION OF ENGINEERING

LAST REVISION 3-27-12 | DATE PLOTTED => 30-AUG-2012 | TIME PLOTTED => 09:08

Dist	COUNTY	ROUTE	POST MILES TOTAL PROJECT	SHEET No.	TOTAL SHEETS
03	Nev	20	R4.1/R17.4	12	106

REGISTERED CIVIL ENGINEER 6-4-12 DATE

6-4-12
PLANS APPROVAL DATE

REGISTERED PROFESSIONAL ENGINEER JOHN D. WELCH No. 58303 Exp. 6-30-14 CIVIL STATE OF CALIFORNIA

THE STATE OF CALIFORNIA OR ITS OFFICERS OR AGENTS SHALL NOT BE RESPONSIBLE FOR THE ACCURACY OR COMPLETENESS OF SCANNED COPIES OF THIS PLAN SHEET.

NOTES:

1. FOR ACCURATE RIGHT OF WAY DATA, CONTACT RIGHT OF WAY ENGINEERING AT THE DISTRICT OFFICE.
2. CONTRACTOR IS RESPONSIBLE FOR POSITIVELY LOCATING UTILITIES PRIOR TO CONSTRUCTION.
3. SEE RSP A88A OF THE 2006 STANDARD PLANS FOR DIMENSIONS AND SLOPES ASSOCIATED WITH ADA CURB RAMPS NOT SHOWN ON THESE DETAILS.
4. CONTRACTOR TO FIELD VERIFY ALL DIMENSIONS.
5. BEFORE REMOVING EXISTING CURB RAMPS, CONTRACTOR TO SET REFERENCE MARKERS.
6. EXISTING UTILITY FACILITIES HAVE NOT BEEEN PLOTTED ON THESE PLANS.

ABBREVIATIONS:

RSP = REVISED STANDARD PLAN
ADA = AMERICANS WITH DISABILITIES ACT

LEGEND (SHEETS C-1 TO C-4):

- REMOVE CONCRETE (CURB, GUTTER, AND SIDEWALK)
- MINOR CONCRETE (CURB, SIDEWALK, AND CURB RAMP)
- CURB RAMP DETECTABLE WARNING SURFACE SEE RSP A88A
- DIRECTION OF SLOPE OF CURB RAMP
- DIRECTION OF DRAINAGE IN GUTTER FLOW LINE
- GROOVED SURFACE DEFINING BEGINNING OF RAMP SEE RSP A88A
- (X) CURB RAMP LOCATION

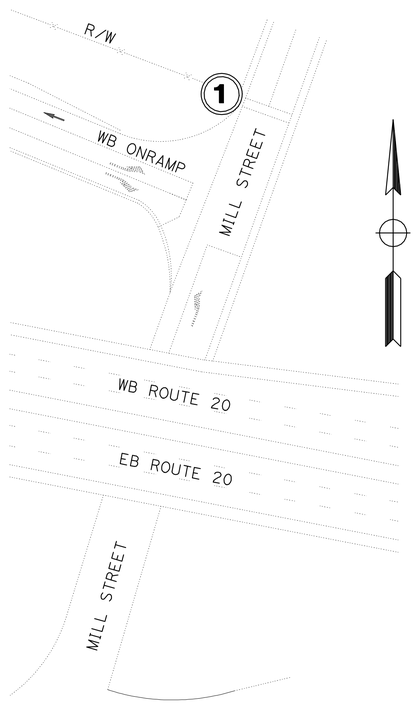

LOCATION MAP

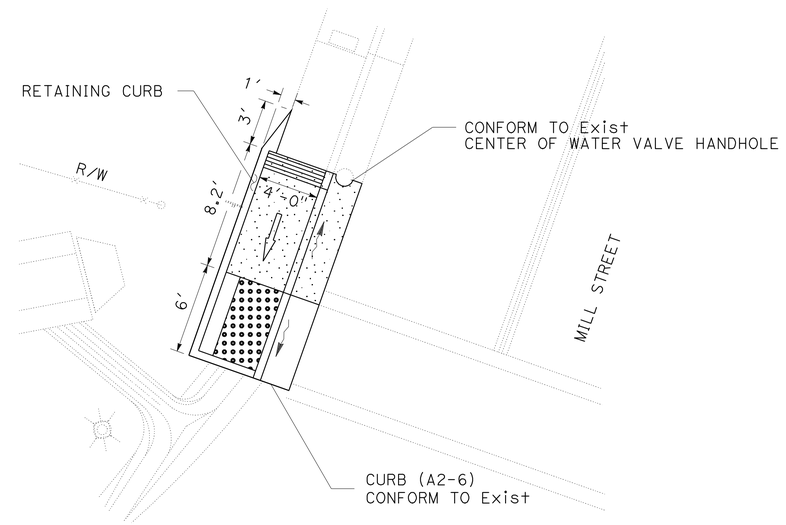

CURB RAMP (1)
MODIFIED TYPE C

CONSTRUCTION DETAILS

NO SCALE

C-1

STATE OF CALIFORNIA - DEPARTMENT OF TRANSPORTATION
Caltrans® DIVISION OF ENGINEERING

FUNCTIONAL SUPERVISOR: MASTRI ALVANDI
CALCULATED-DESIGNED BY: JOHN WELCH
CHECKED BY: DAVINDER MINHAS
REVISED BY
DATE REVISED

LAST REVISION 3-27-12
DATE PLOTTED => 30-AUG-2012
TIME PLOTTED => 09:08

Dist	COUNTY	ROUTE	POST MILES TOTAL PROJECT	SHEET No.	TOTAL SHEETS
03	Nev	20	R4.1/R17.4	13	106

REGISTERED CIVIL ENGINEER DATE 6-4-12

6-4-12
PLANS APPROVAL DATE

REGISTERED PROFESSIONAL ENGINEER JOHN D. WELCH No. 58303 Exp. 6-30-14 CIVIL STATE OF CALIFORNIA

THE STATE OF CALIFORNIA OR ITS OFFICERS OR AGENTS SHALL NOT BE RESPONSIBLE FOR THE ACCURACY OR COMPLETENESS OF SCANNED COPIES OF THIS PLAN SHEET.

NOTE:

1. WIDTH OF LANDING TO BE MEASURED AT FLOWLINE

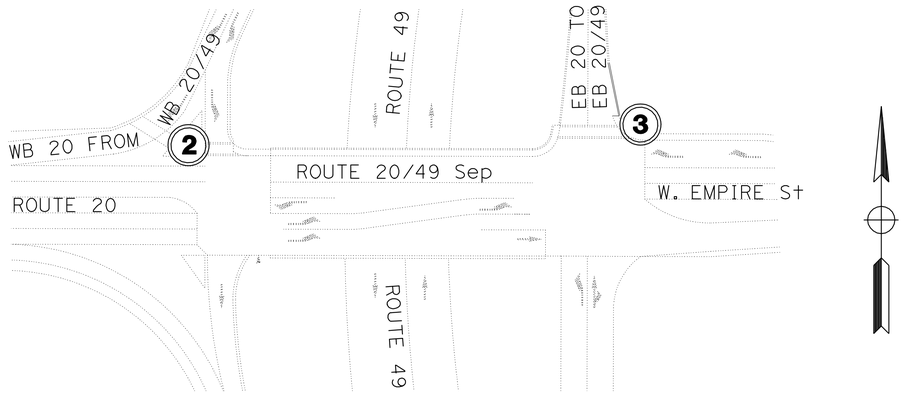

LOCATION MAP

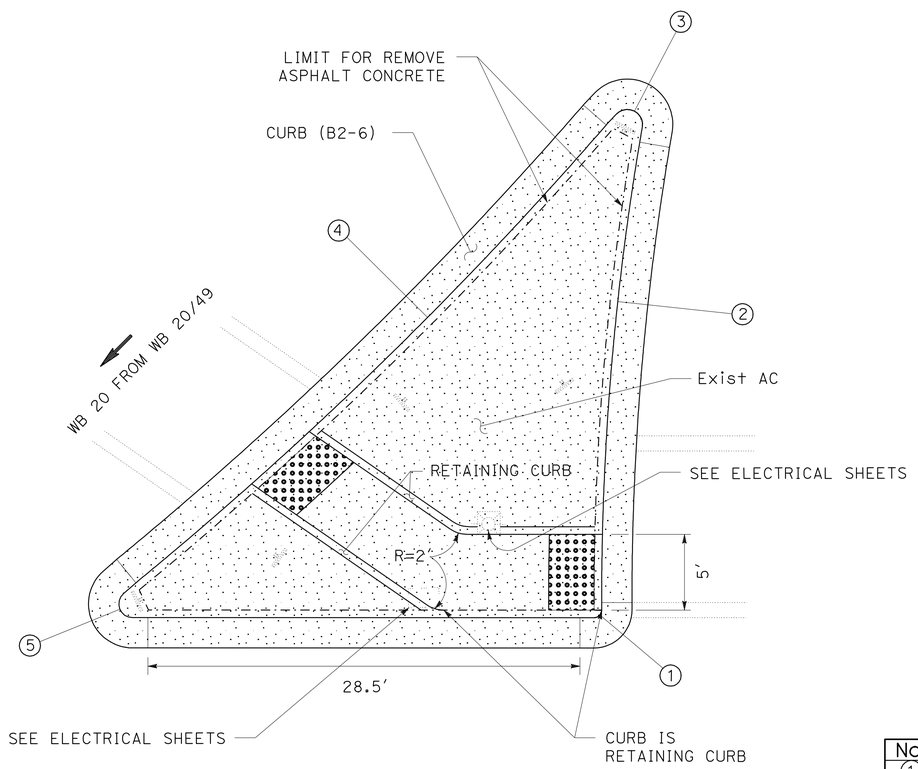

CURB RAMP (2) TYPE B PASSAGEWAY

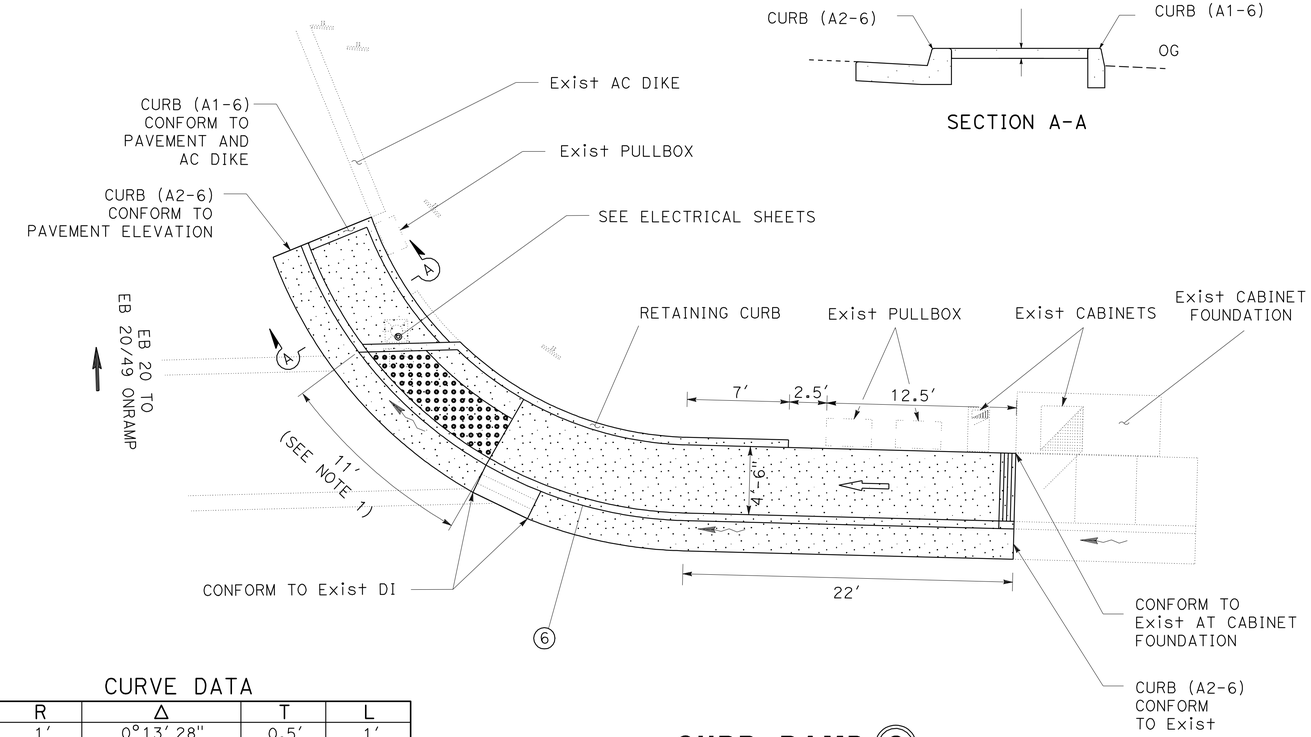

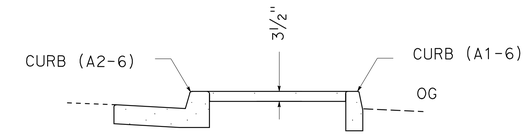

SECTION A-A

CURB RAMP (3) MODIFIED TYPE C

CURVE DATA

No.	R	Δ	T	L
1	1'	0°13' 28"	0.5'	1'
2	183'	80°25' 27"	15'	30'
3	2.5'	24°36' 52"	7'	2'
4	257'	80°19' 25"	22'	43'
5	2.5'	24°36' 52"	7'	2'
6	28'	27°3' 37"	17'	31'

CONSTRUCTION DETAILS

NO SCALE

C-2

STATE OF CALIFORNIA - DEPARTMENT OF TRANSPORTATION
Caltrans® DIVISION OF ENGINEERING

FUNCTIONAL SUPERVISOR: MASTRI ALVANDI
CALCULATED-DESIGNED BY: JOHN WELCH
CHECKED BY: DAVINDER MINHAS
REVISED BY
DATE REVISED

LAST REVISION 3-27-12
DATE PLOTTED => 30-AUG-2012
TIME PLOTTED => 09:09

Dist	COUNTY	ROUTE	POST MILES TOTAL PROJECT	SHEET No.	TOTAL SHEETS
03	Nev	20	R4.1/R17.4	14	106

REGISTERED CIVIL ENGINEER 6-4-12 DATE

6-4-12
PLANS APPROVAL DATE

REGISTERED PROFESSIONAL ENGINEER JOHN D. WELCH No. 58303 Exp. 6-30-14 CIVIL STATE OF CALIFORNIA

THE STATE OF CALIFORNIA OR ITS OFFICERS OR AGENTS SHALL NOT BE RESPONSIBLE FOR THE ACCURACY OR COMPLETENESS OF SCANNED COPIES OF THIS PLAN SHEET.

NOTE:

1. WIDTH OF LANDING TO BE MEASURED AT FLOWLINE.
2. SEE SHEET C-4 FOR CURB RAMPS 5, 6, AND 7.

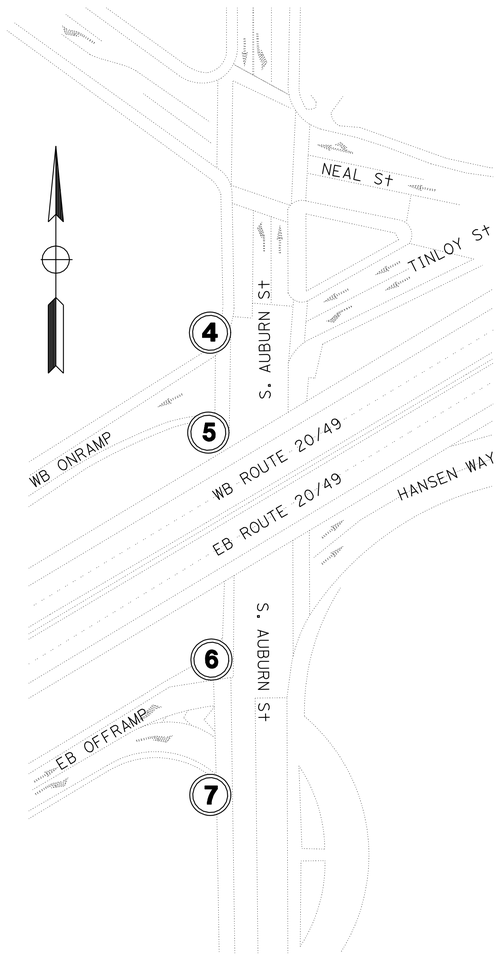

LOCATION MAP

CURVE DATA

No.	R	Δ	T	L
1	38′	42°45′28″	16′	30′

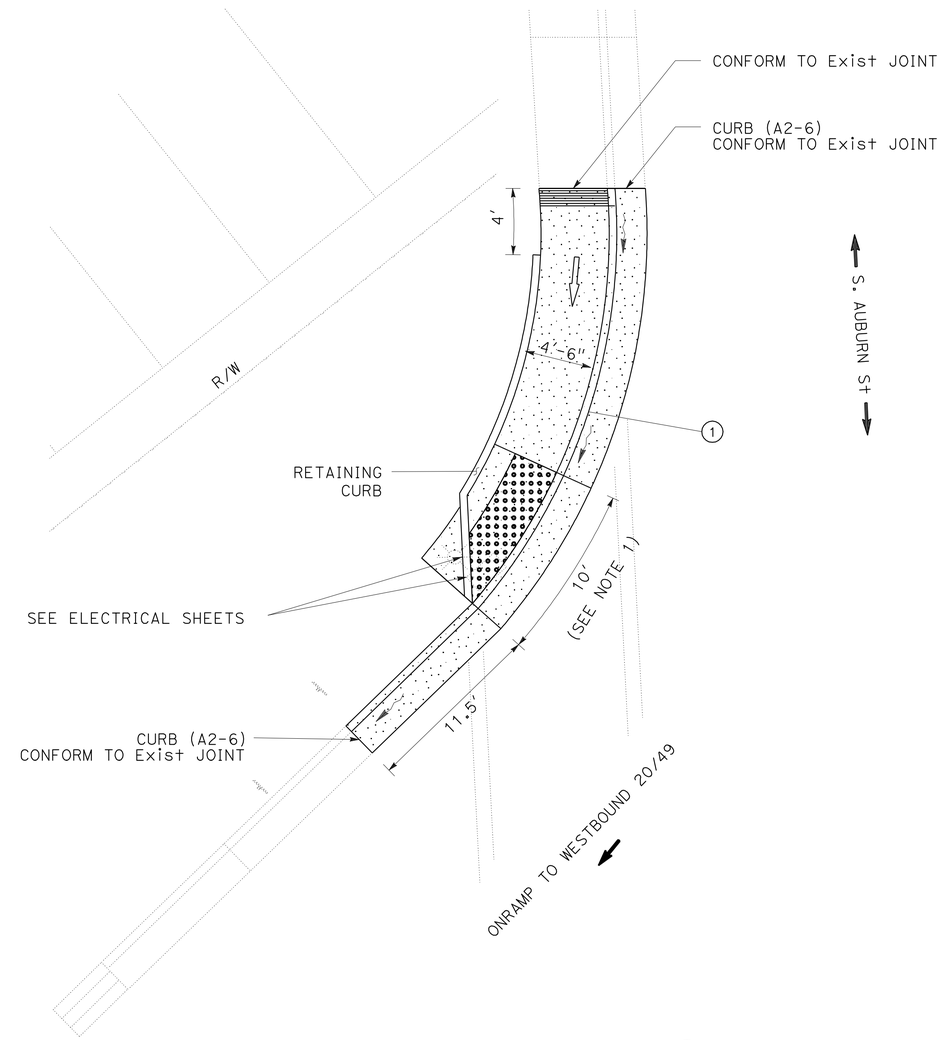

CURB RAMP 4
MODIFIED TYPE C

CONSTRUCTION DETAILS

NO SCALE

C-3

STATE OF CALIFORNIA - DEPARTMENT OF TRANSPORTATION
Caltrans DIVISION OF ENGINEERING

FUNCTIONAL SUPERVISOR: MASTRI ALVANDI
CALCULATED-DESIGNED BY: JOHN WELCH
CHECKED BY: DAVINDER MINHAS
REVISED BY
DATE REVISED

LAST REVISION 3-27-12
DATE PLOTTED => 30-AUG-2012
TIME PLOTTED => 09:09

Dist	COUNTY	ROUTE	POST MILES TOTAL PROJECT	SHEET No.	TOTAL SHEETS
03	Nev	20	R4.1/R17.4	15	106

REGISTERED CIVIL ENGINEER 6-4-12 DATE

6-4-12
PLANS APPROVAL DATE

REGISTERED PROFESSIONAL ENGINEER JOHN D. WELCH No. 58303 Exp. 6-30-14 CIVIL STATE OF CALIFORNIA

THE STATE OF CALIFORNIA OR ITS OFFICERS OR AGENTS SHALL NOT BE RESPONSIBLE FOR THE ACCURACY OR COMPLETENESS OF SCANNED COPIES OF THIS PLAN SHEET.

NOTE:

1. WIDTH OF LANDING TO BE MEASURED AT FLOWLINE.

CURVE DATA

No.	R	Δ	T	L
1	14′	85°45′17″	13′	19′
2	53′	46°16′44″	23′	40′

LEGEND (THIS SHEET ONLY):

PLACE ASPHALT CONCRETE (MISCELLANEOUS AREA)

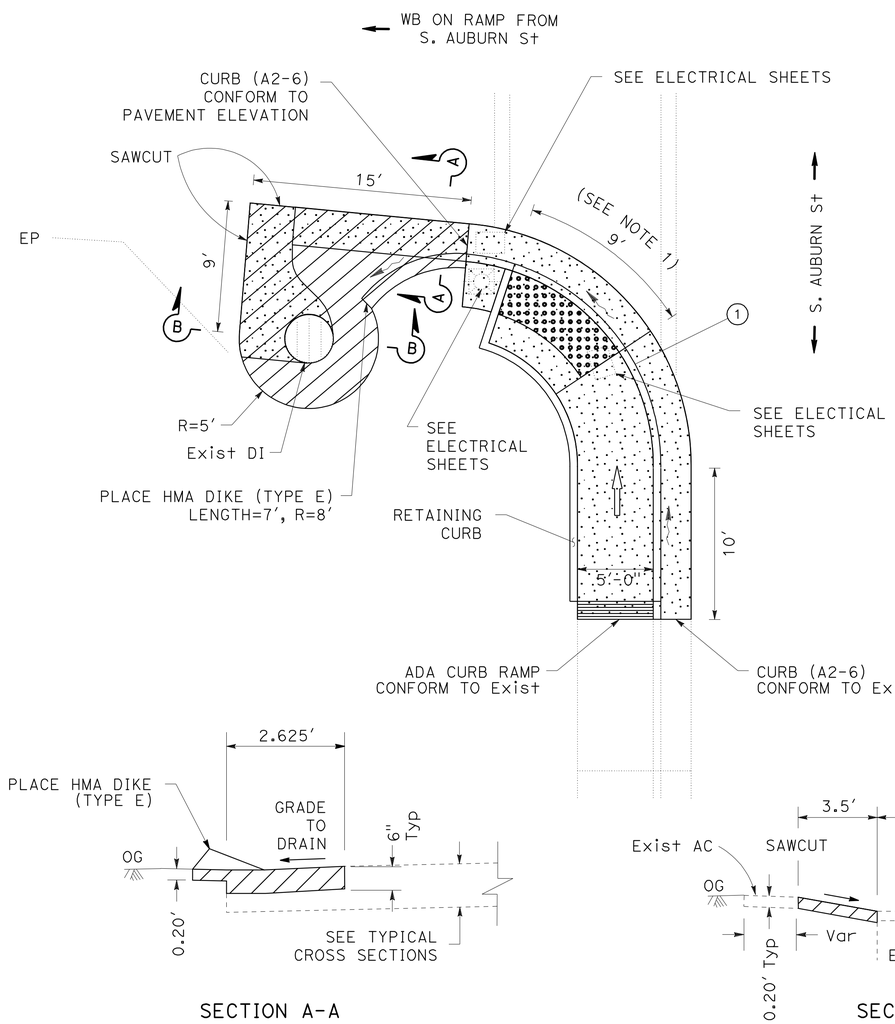

CURB RAMP (5) MODIFIED TYPE C

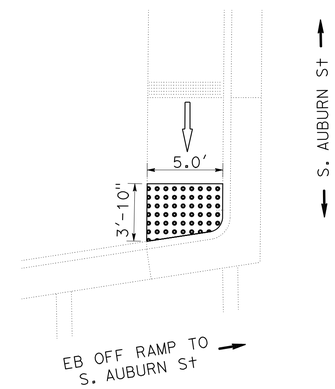

CURB RAMP (6) DETECTABLE WARNING SURFACE

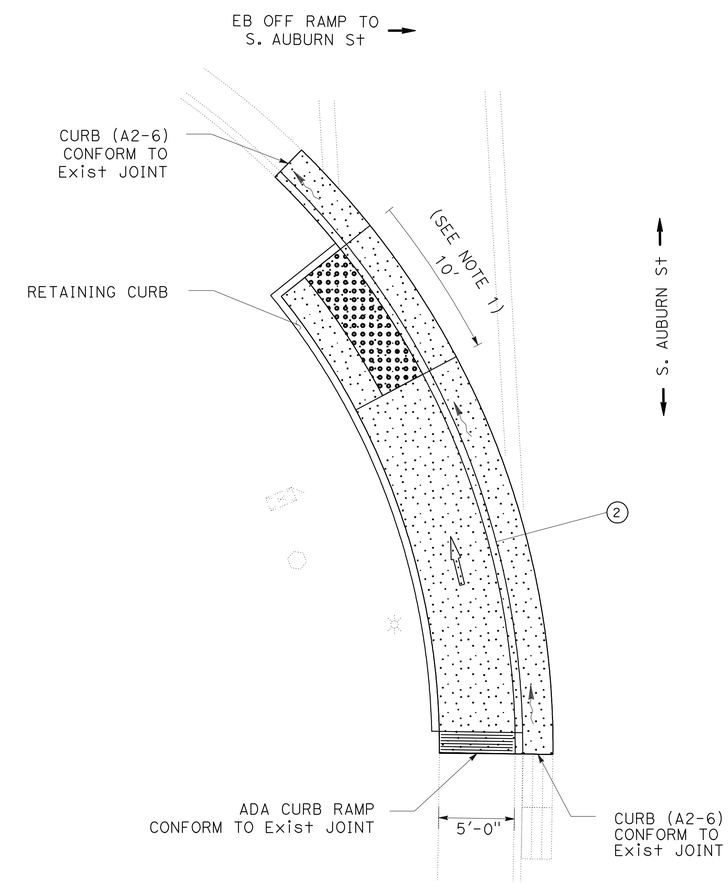

CURB RAMP (7) MODIFIED TYPE C

CONSTRUCTION DETAILS

NO SCALE

C-4

STATE OF CALIFORNIA - DEPARTMENT OF TRANSPORTATION
Caltrans DIVISION OF ENGINEERING

FUNCTIONAL SUPERVISOR: MASTRI ALVANDI
CALCULATED-DESIGNED BY: JOHN WELCH
CHECKED BY: DAVINDER MINHAS
REVISED BY
DATE REVISED

LAST REVISION 3-27-12
DATE PLOTTED => 30-AUG-2012
TIME PLOTTED => 09:09

Dist	COUNTY	ROUTE	POST MILES TOTAL PROJECT	SHEET No.	TOTAL SHEETS
03	Nev	20	R4.1/R17.4	16	106

REGISTERED CIVIL ENGINEER 6-4-12 DATE

6-4-12
PLANS APPROVAL DATE

REGISTERED PROFESSIONAL ENGINEER JOHN D. WELCH No. 58303 Exp. 6-30-14 CIVIL STATE OF CALIFORNIA

THE STATE OF CALIFORNIA OR ITS OFFICERS OR AGENTS SHALL NOT BE RESPONSIBLE FOR THE ACCURACY OR COMPLETENESS OF SCANNED COPIES OF THIS PLAN SHEET.

NOTE:

1. SEE LANDSCAPE SHEETS FOR QUANTITIES OF IMPORTED TOPSOIL AND EROSION CONTROL.

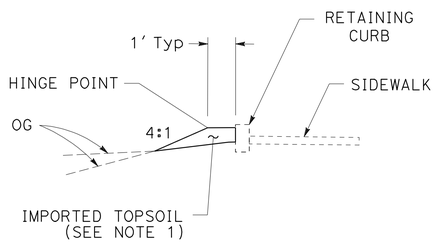

CURB RAMPS 1, 3, 4, 5, 7 TYPICAL IMPORTED TOPSOIL DETAIL

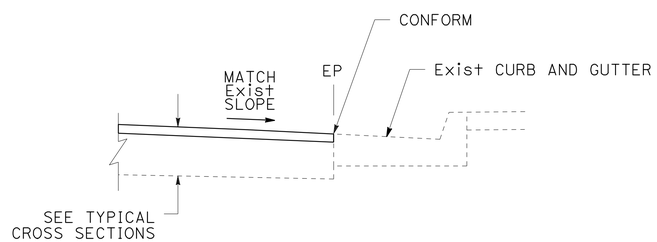

HMA CONFORM TO Exist CURB AND GUTTER

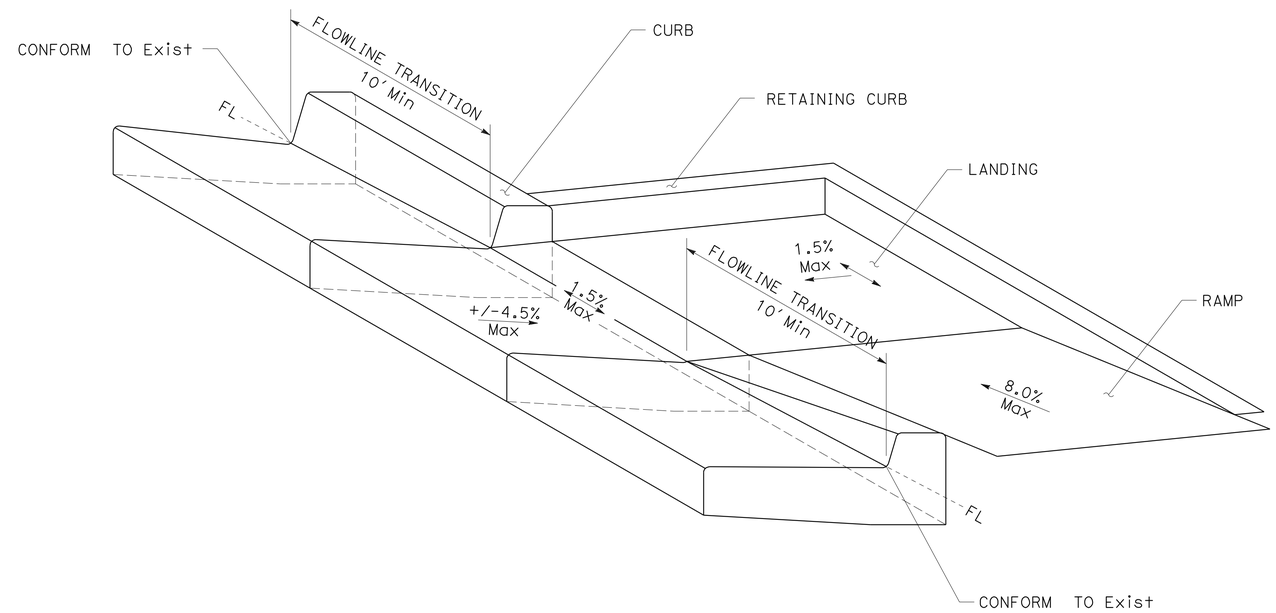

MAXIMUM SLOPES ON ADA RAMPS AND TYPICAL FLOW LINE GRADE TRANSITION

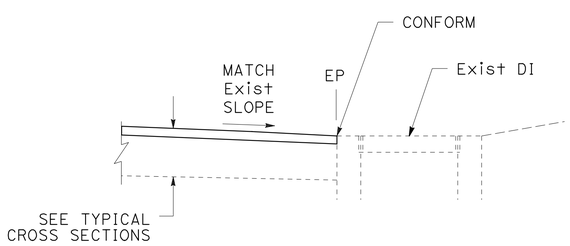

HMA CONFORM TO Exist DI

CONSTRUCTION DETAILS

NO SCALE

C-5

STATE OF CALIFORNIA - DEPARTMENT OF TRANSPORTATION
Caltrans DIVISION OF ENGINEERING

FUNCTIONAL SUPERVISOR: MASTRI ALVANDI
CALCULATED-DESIGNED BY: JOHN WELCH
CHECKED BY: DAVINDER MINHAS
REVISED BY
DATE REVISED

LAST REVISION 3-27-12
DATE PLOTTED => 30-AUG-2012
TIME PLOTTED => 09:09

Dist	COUNTY	ROUTE	POST MILES TOTAL PROJECT	SHEET No.	TOTAL SHEETS
03	Nev	20	R4.1/R17.4	17	106

REGISTERED CIVIL ENGINEER 6-4-12 DATE

6-4-12
PLANS APPROVAL DATE

REGISTERED PROFESSIONAL ENGINEER JOHN D. WELCH No. 58303 Exp. 6-30-14 CIVIL STATE OF CALIFORNIA

THE STATE OF CALIFORNIA OR ITS OFFICERS OR AGENTS SHALL NOT BE RESPONSIBLE FOR THE ACCURACY OR COMPLETENESS OF SCANNED COPIES OF THIS PLAN SHEET.

NOTE:

1. SEE TYPICAL CROSS SECTIONS FOR COLD PLANE AC Pvmt, REMOVE AC SURFACING, AND RHMA DIMENSIONS AT EACH LOCATION.

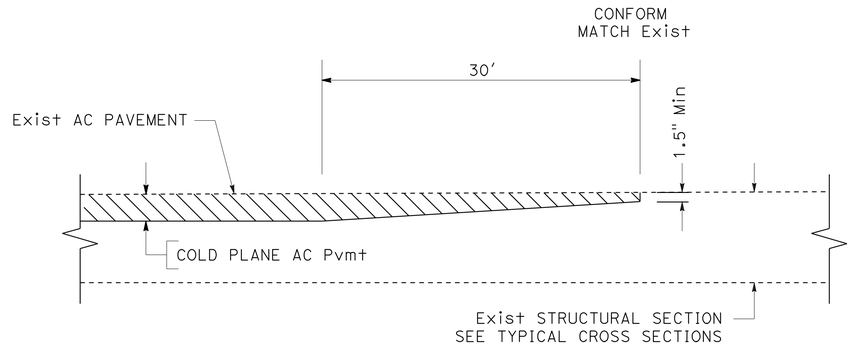

MAINLINE AND RAMP CONFORM DETAIL

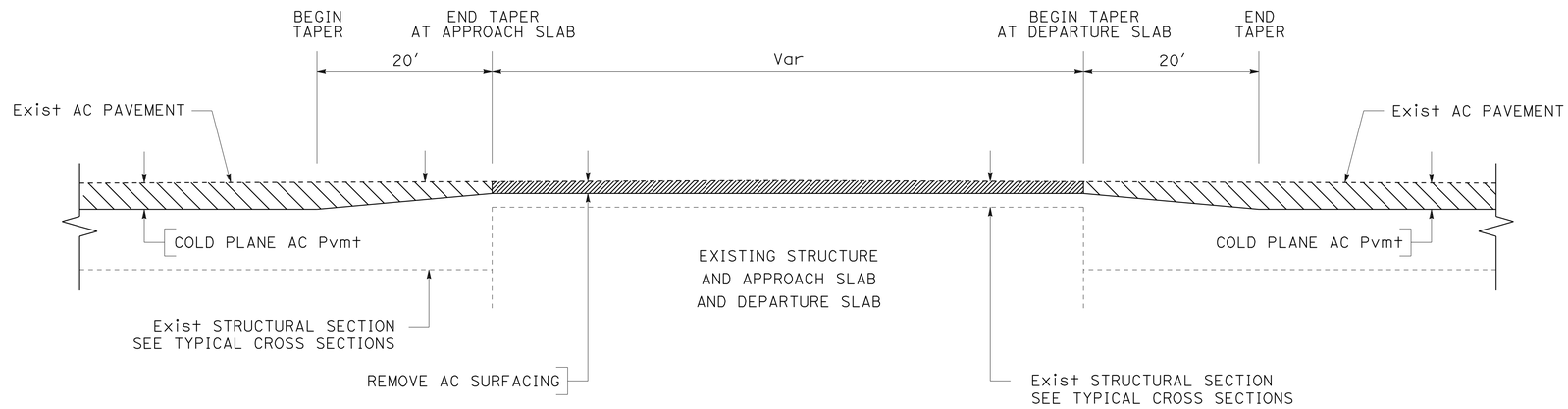

PAVING CONFORM AT STRUCTURES

PROFILE

PM R5.32 SQUIRREL Cr Br
PM R12.16 MILL St UC
PM R12.24 20/49 Sep
PM R13.04 BANK St UC
PM R13.11 BENNETT St UC
PM R13.61 IDAHO-MARYLAND Rd UC (MAINLINE AND ADJACENT RAMPS)
PM R16.87 DEER Cr Br (MAINLINE AND ADJACENT RAMPS)

CONSTRUCTION DETAILS

NO SCALE

C-6

STATE OF CALIFORNIA - DEPARTMENT OF TRANSPORTATION
Caltrans DIVISION OF ENGINEERING

FUNCTIONAL SUPERVISOR: MASTRI ALVANDI
CALCULATED-DESIGNED BY: JOHN WELCH
CHECKED BY: DAVINDER MINHAS
REVISED BY
DATE REVISED

LAST REVISION 3-27-12
DATE PLOTTED => 30-AUG-2012
TIME PLOTTED => 09:09

Dist	COUNTY	ROUTE	POST MILES TOTAL PROJECT	SHEET No.	TOTAL SHEETS
03	Nev	20	R4.1/R17.4	18	106

REGISTERED CIVIL ENGINEER 6-4-12 DATE

6-4-12
PLANS APPROVAL DATE

REGISTERED PROFESSIONAL ENGINEER JOHN D. WELCH No. 58303 Exp. 6-30-14 CIVIL STATE OF CALIFORNIA

THE STATE OF CALIFORNIA OR ITS OFFICERS OR AGENTS SHALL NOT BE RESPONSIBLE FOR THE ACCURACY OR COMPLETENESS OF SCANNED COPIES OF THIS PLAN SHEET.

NOTES:

1. SEE SUMMARY OF QUANTITIES SHEET FOR LOCATIONS.
2. EXACT LOCATION OF REPLACE AC SURFACING WILL BE DETERMINED IN THE FIELD BY THE ENGINEER.

ABBREVIATIONS:

LL = LANE LINE.
LETW = LEFT EDGE OF TRAVELED WAY.
RETW = RIGHT EDGE OF TRAVELED WAY.

LEGEND (THIS SHEET ONLY):

REPLACE AC SURFACING.

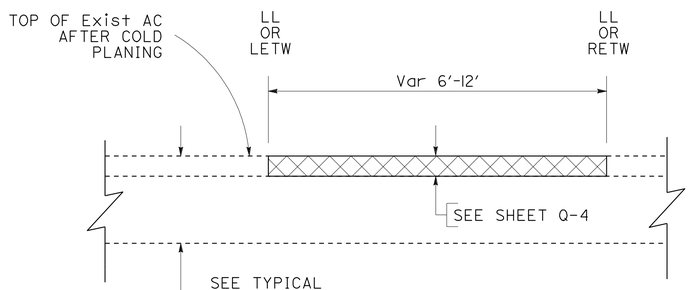

REPLACE AC SURFACING

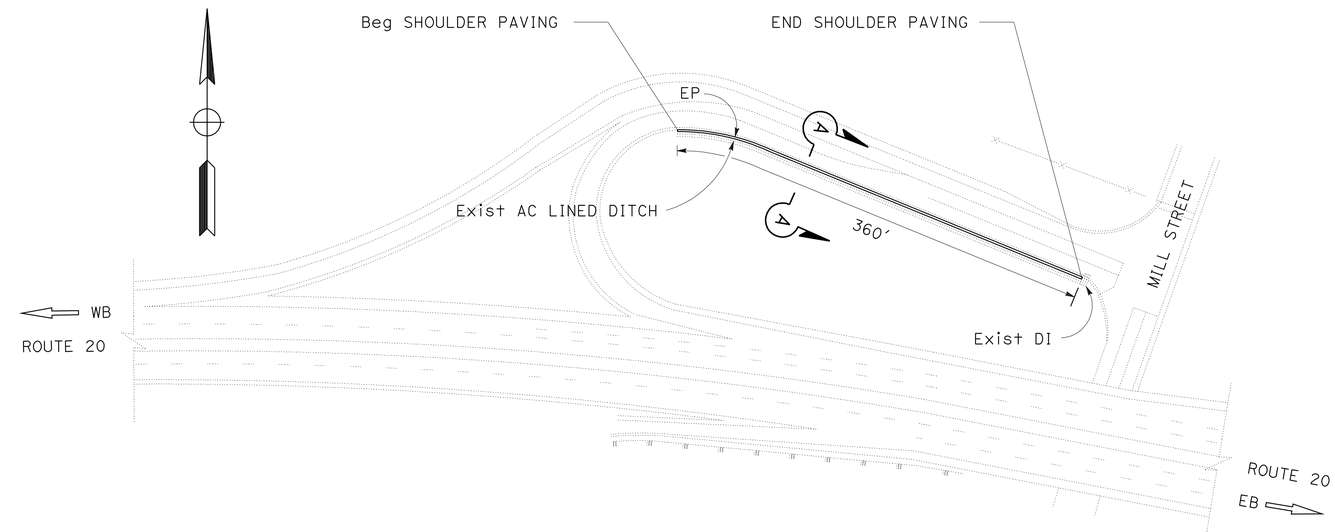

WB OFFRAMP TO MILL STREET SHOULDER PAVING DETAIL

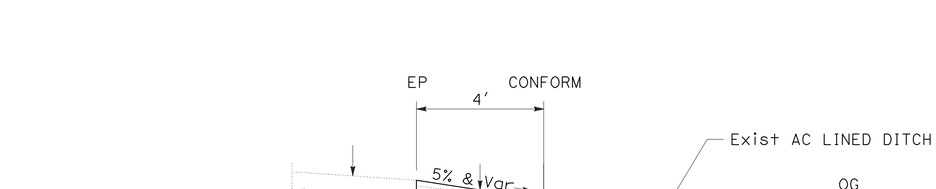

SECTION A-A

CONSTRUCTION DETAILS

NO SCALE

C-7

STATE OF CALIFORNIA - DEPARTMENT OF TRANSPORTATION
Caltrans DIVISION OF ENGINEERING

FUNCTIONAL SUPERVISOR: MASTRI ALVANDI
CALCULATED-DESIGNED BY: JOHN WELCH
CHECKED BY: DAVINDER MINHAS
REVISED BY
DATE REVISED

LAST REVISION 3-27-12
DATE PLOTTED => 30-AUG-2012
TIME PLOTTED => 09:09

Dist	COUNTY	ROUTE	POST MILES TOTAL PROJECT	SHEET No.	TOTAL SHEETS
03	Nev	20	R4.1/R17.4	19	106

REGISTERED CIVIL ENGINEER 6-4-12 DATE

6-4-12
PLANS APPROVAL DATE

REGISTERED PROFESSIONAL ENGINEER JOHN D. WELCH No. 58303 Exp. 6-30-14 CIVIL STATE OF CALIFORNIA

THE STATE OF CALIFORNIA OR ITS OFFICERS OR AGENTS SHALL NOT BE RESPONSIBLE FOR THE ACCURACY OR COMPLETENESS OF SCANNED COPIES OF THIS PLAN SHEET.

NOTE:

1. EXACT PAVING LIMITS WILL BE DETERMINED BY THE ENGINEER.

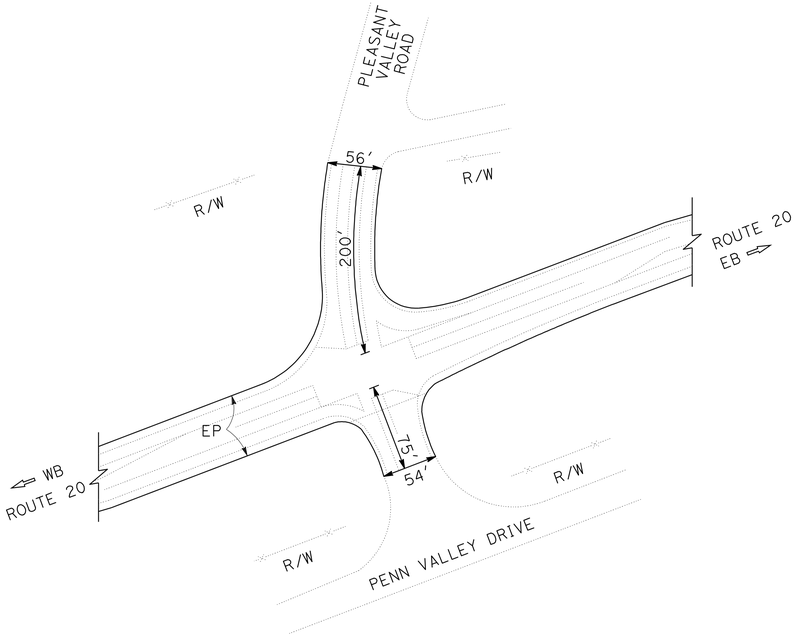

ROUTE 20 - LIMIT OF WORK
PLEASANT VALLEY ROAD INTERSECTION
PM R4.65

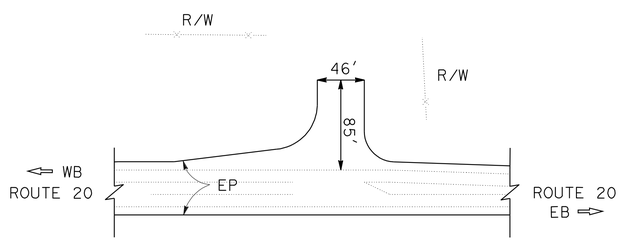

ROUTE 20 - LIMIT OF WORK
CATTLE DRIVE CONNECTOR
PM R6.22

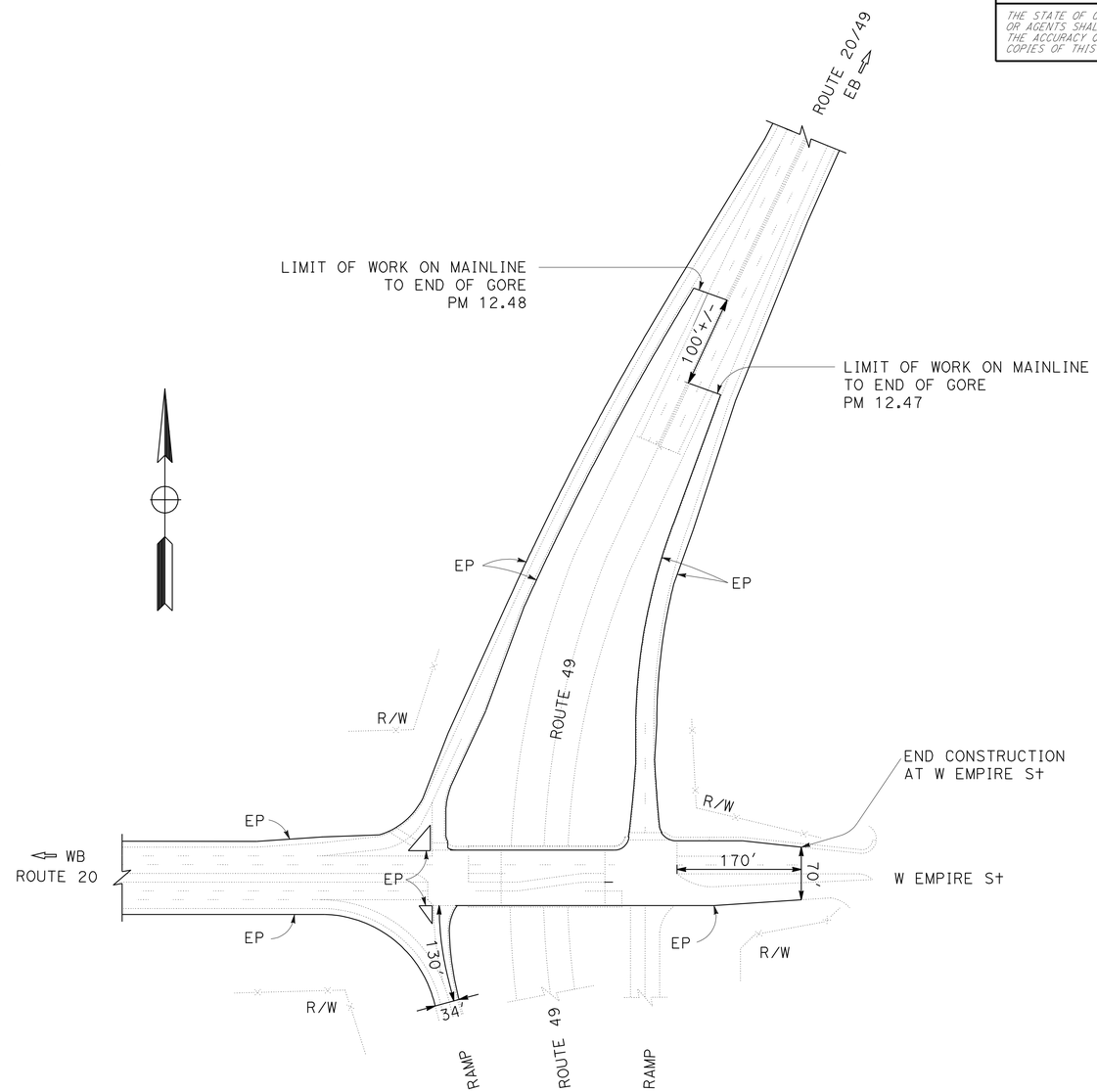

ROUTE 20/49 SEPARATION
LIMIT OF WORK
PM R12.24

CONSTRUCTION DETAILS

NO SCALE

C-8

STATE OF CALIFORNIA - DEPARTMENT OF TRANSPORTATION
Caltrans DIVISION OF ENGINEERING

FUNCTIONAL SUPERVISOR: MASTRI ALVANDI
CALCULATED-DESIGNED BY: JOHN WELCH
CHECKED BY: DAVINDER MINHAS
REVISED BY
DATE REVISED

LAST REVISION 3-27-12
DATE PLOTTED => 30-AUG-2012
TIME PLOTTED => 09:09

Dist	COUNTY	ROUTE	POST MILES TOTAL PROJECT	SHEET No.	TOTAL SHEETS
03	Nev	20	R4.1/R17.4	20	106

REGISTERED CIVIL ENGINEER 6-4-12 DATE

6-4-12
PLANS APPROVAL DATE

REGISTERED PROFESSIONAL ENGINEER JOHN D. WELCH No. 58303 Exp. 6-30-14 CIVIL STATE OF CALIFORNIA

THE STATE OF CALIFORNIA OR ITS OFFICERS OR AGENTS SHALL NOT BE RESPONSIBLE FOR THE ACCURACY OR COMPLETENESS OF SCANNED COPIES OF THIS PLAN SHEET.

NOTE:

1. EXACT PAVING LIMITS WILL BE DETERMINED BY THE ENGINEER.

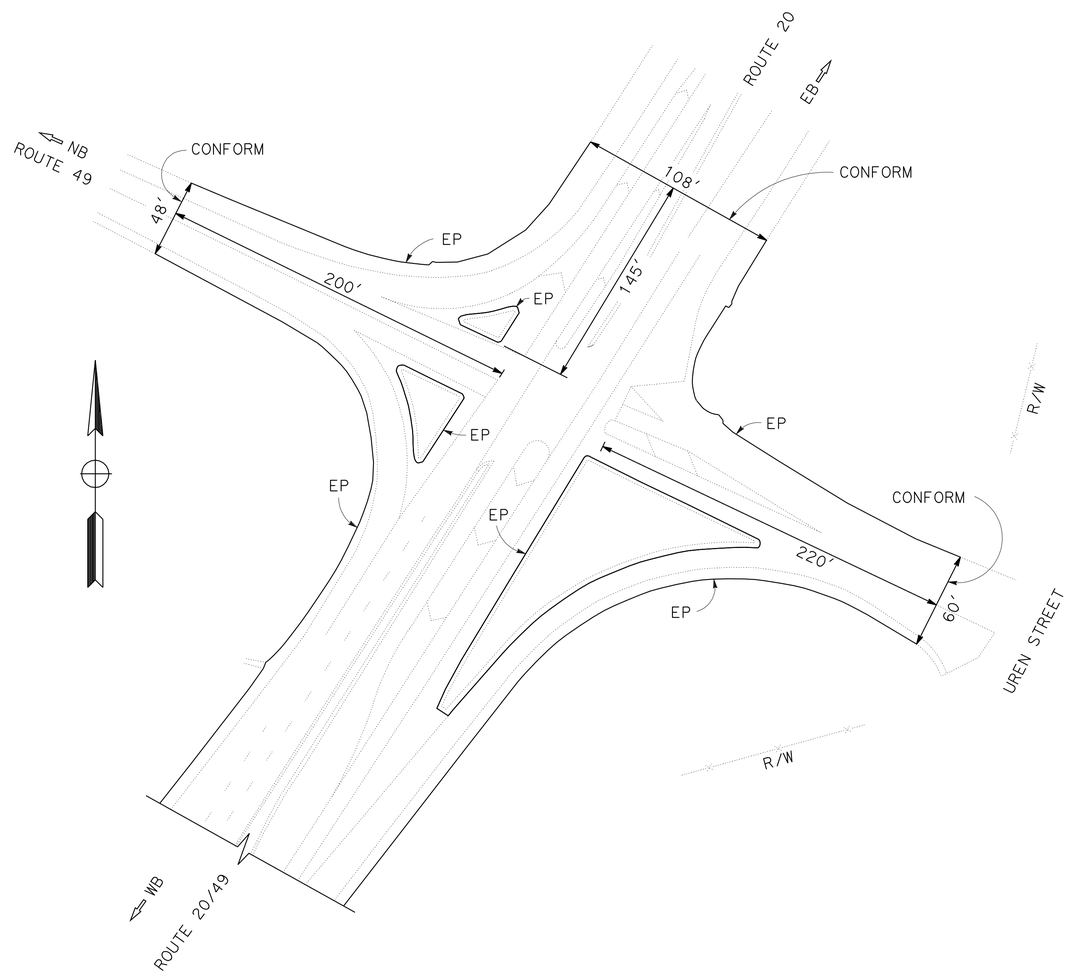

ROUTE 20/49 NORTH JUNCTION
LIMIT OF WORK
PM R17.40

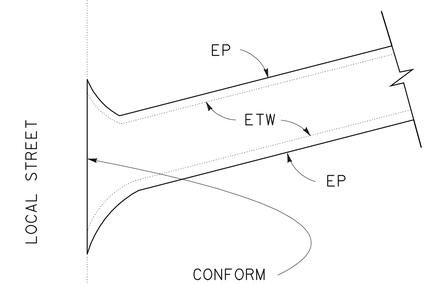

TYPICAL RAMP PAVING DETAIL (CONFORM AT LOCAL STREET)

NOTE: SEE RAMP TYPICAL CROSS SECTIONS FOR LOCATIONS.

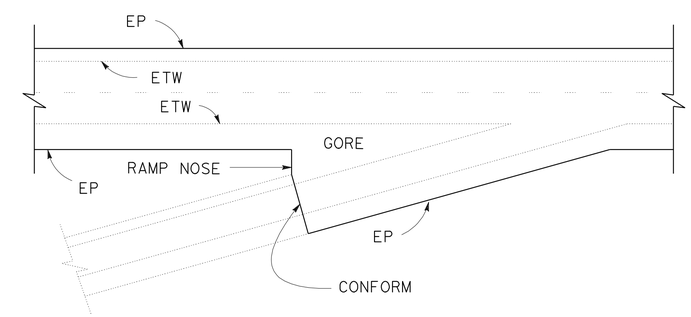

TYPICAL RAMP PAVING DETAIL (CONFORM AT GORE)

NOTE: SEE RAMP TYPICAL CROSS SECTIONS FOR LOCATIONS.

CONSTRUCTION DETAILS

NO SCALE

C-9

STATE OF CALIFORNIA - DEPARTMENT OF TRANSPORTATION
Caltrans® DIVISION OF ENGINEERING

FUNCTIONAL SUPERVISOR: MASTRI ALVANDI
CALCULATED-DESIGNED BY: JOHN WELCH
CHECKED BY: DAVINDER MINHAS
REVISED BY
DATE REVISED

LAST REVISION 3-27-12
DATE PLOTTED => 30-AUG-2012
TIME PLOTTED => 09:09

Dist	COUNTY	ROUTE	POST MILES TOTAL PROJECT	SHEET No.	TOTAL SHEETS
03	Nev	20	R4.1/R17.4	21	106

REGISTERED CIVIL ENGINEER 6-4-12 DATE

6-4-12
PLANS APPROVAL DATE

REGISTERED PROFESSIONAL ENGINEER JOHN D. WELCH No. 58303 Exp. 6-30-14 CIVIL STATE OF CALIFORNIA

THE STATE OF CALIFORNIA OR ITS OFFICERS OR AGENTS SHALL NOT BE RESPONSIBLE FOR THE ACCURACY OR COMPLETENESS OF SCANNED COPIES OF THIS PLAN SHEET.

NOTE:

1. CENTERLINE RUMBLE STRIP MUST BE CONSTRUCTED PRIOR TO INSTALLING THERMOPLASTIC TRAFFIC STRIPING.

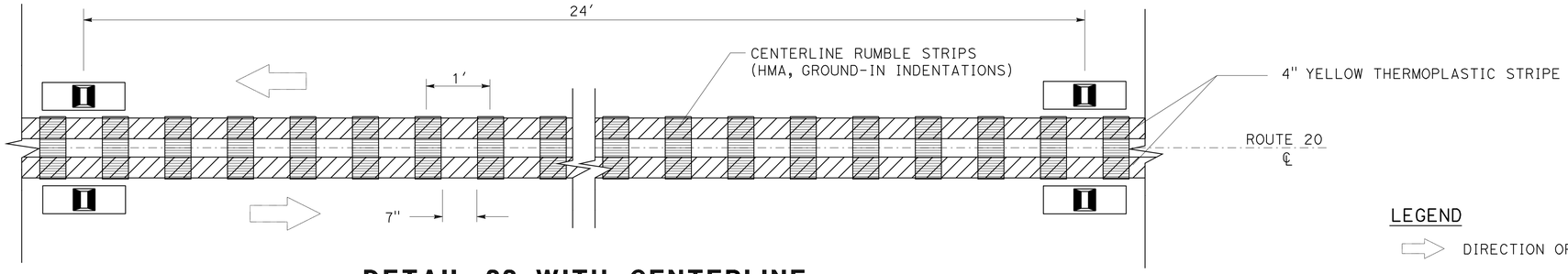

DETAIL 22 WITH CENTERLINE RUMBLE STRIPS

PM 10.34 TO 10.54
PM 11.04 TO 11.80

LEGEND

- DIRECTION OF TRAVEL
- PAVEMENT MARKER (RETROREFLECTIVE), TYPE D, YELLOW
- PAVEMENT MARKER (RETROREFLECTIVE), TYPE H, YELLOW
- RUMBLE STRIP

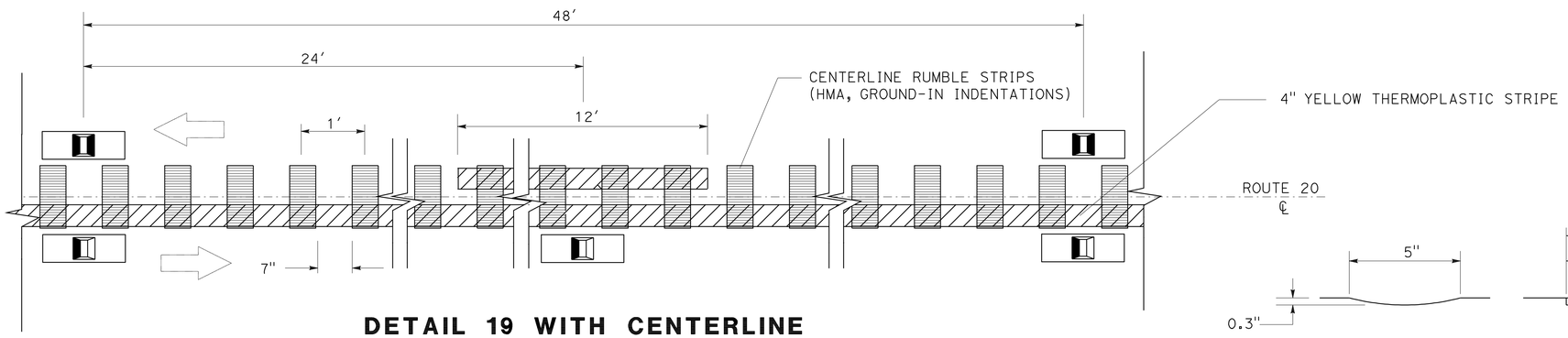

DETAIL 19 WITH CENTERLINE RUMBLE STRIPS

PM 10.54 TO 11.04

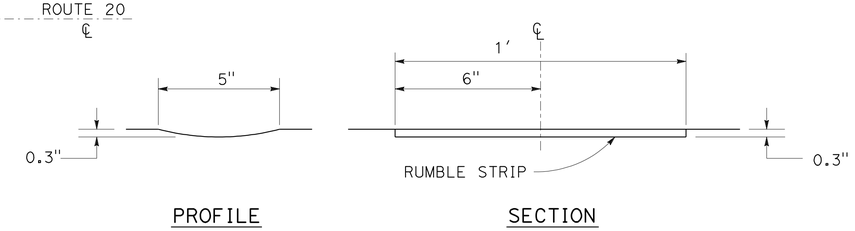

CENTERLINE RUMBLE STRIP (HMA, GROUND-IN INDENTATIONS) DETAILS

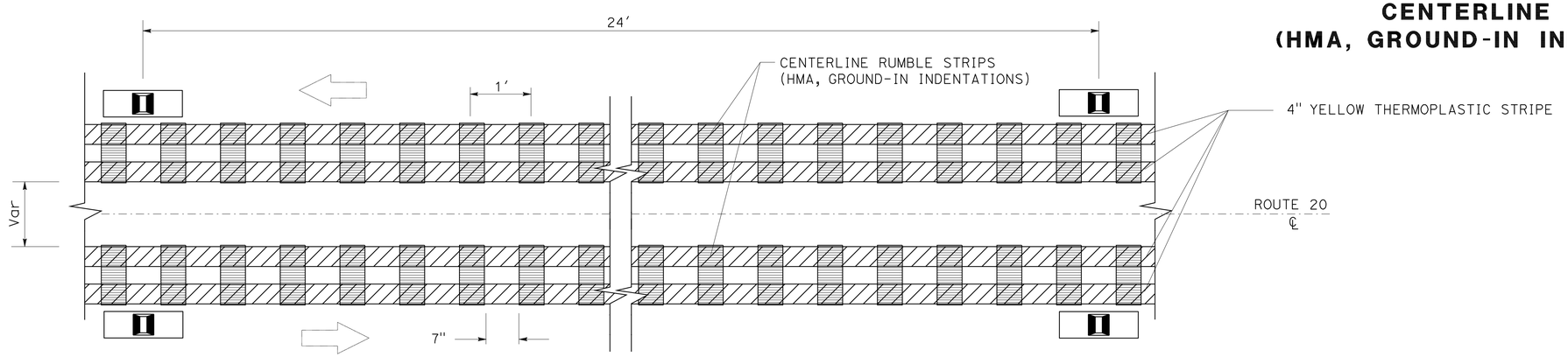

DETAIL 29 WITH CENTERLINE RUMBLE STRIPS

PM 10.20 TO 10.34

CONSTRUCTION DETAILS

NO SCALE

C-10

REVISED BY	DATE REVISED

CALCULATED-DESIGNED BY	CHECKED BY
JOHN WELCH	DAVINDER MINHAS

FUNCTIONAL SUPERVISOR
MASTRI ALVANDI

STATE OF CALIFORNIA - DEPARTMENT OF TRANSPORTATION
Caltrans DIVISION OF ENGINEERING

LAST REVISION 3-27-12 | DATE PLOTTED => 30-AUG-2012 | TIME PLOTTED => 09:09

Dist	COUNTY	ROUTE	POST MILES TOTAL PROJECT	SHEET No.	TOTAL SHEETS
03	Nev	20	R4.1/R17.4	22	106

REGISTERED CIVIL ENGINEER 6-4-12 DATE

6-4-12
PLANS APPROVAL DATE

REGISTERED PROFESSIONAL ENGINEER
JAMES PHILIPP
No. C59614
Exp. 12-31-13
CIVIL
STATE OF CALIFORNIA

THE STATE OF CALIFORNIA OR ITS OFFICERS OR AGENTS SHALL NOT BE RESPONSIBLE FOR THE ACCURACY OR COMPLETENESS OF SCANNED COPIES OF THIS PLAN SHEET.

NOTES

1. SEE LANDSCAPE PLANS FOR MINOR CONCRETE (PATTERNED) DETAILS.

LEGEND

No.	LOCATION NUMBER	OSD	OVERSIDE DRAIN
	DIRECTION OF TRAFFIC	GMP	GALVANIZED METAL PIPE
	DRAINAGE FLOW DIRECTION	VPDI	VERTICAL PIPE DRAINAGE INLET
MAIN	MAINLINE SIDE OF ROADWAY	MCP	MINOR CONCRETE (PATTERNED)

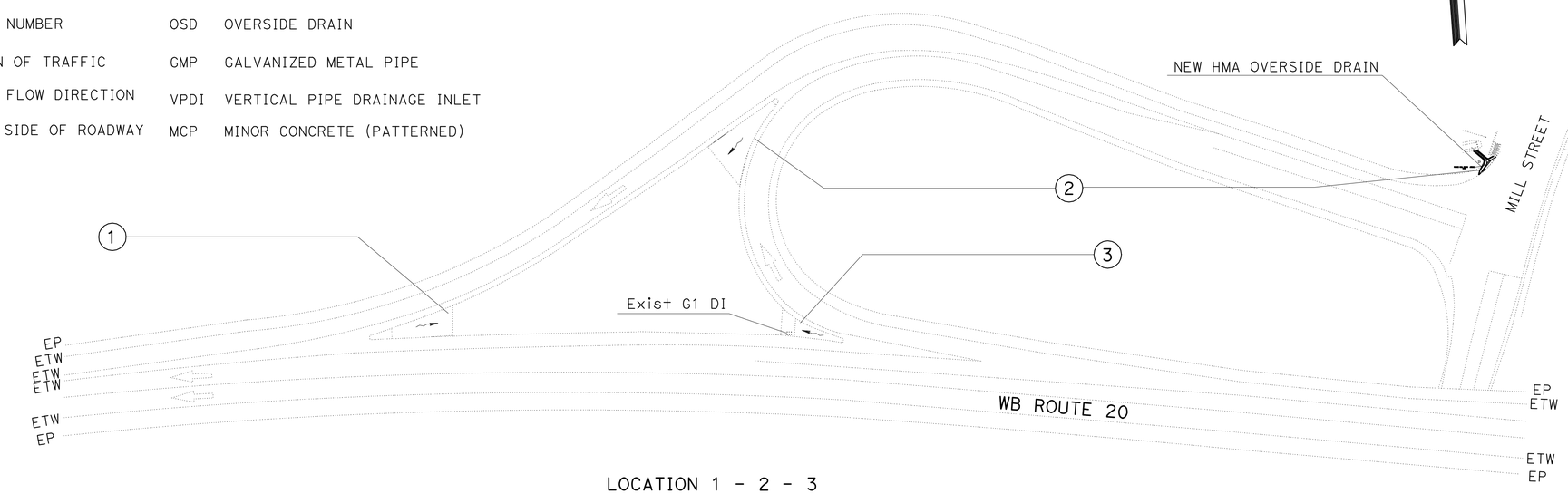

LOCATION 1 - 2 - 3

WB MILL STREET OFF RAMP
WB MILL STREET ON RAMP

DRAINAGE SWALE

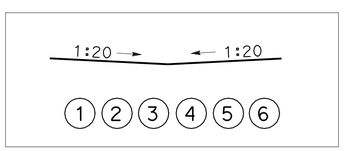

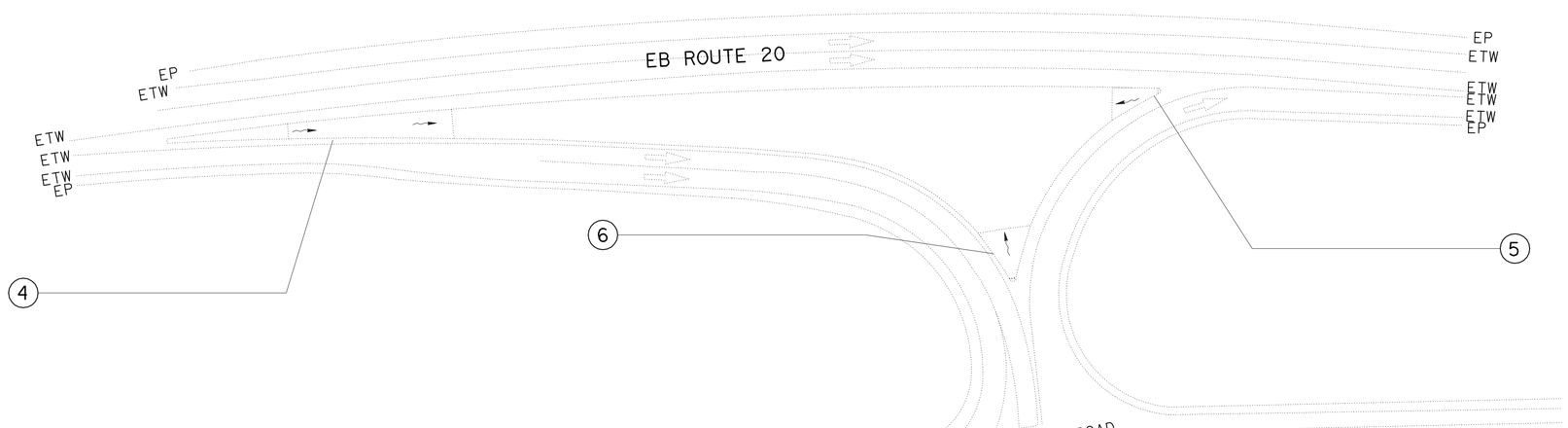

LOCATION 4 - 5 - 6

EB MCCOURTNEY ROAD OFF RAMP
EB MCCOURTNEY ROAD ON RAMP

DRAINAGE DETAILS

NO SCALE

DD-1

STATE OF CALIFORNIA - DEPARTMENT OF TRANSPORTATION
Caltrans® HYDRAULICS BRANCH

FUNCTIONAL SUPERVISOR: DENNIS JAGODA
CALCULATED-DESIGNED BY: JAMES PHILIPP
CHECKED BY
REVISED BY
DATE REVISED

LAST REVISION 00-00-00
DATE PLOTTED => 30-AUG-2012
TIME PLOTTED => 09:09

Dist	COUNTY	ROUTE	POST MILES TOTAL PROJECT	SHEET No.	TOTAL SHEETS
03	Nev	20	R4.1/R17.4	23	106

REGISTERED CIVIL ENGINEER 6-4-12 DATE

6-4-12
PLANS APPROVAL DATE

REGISTERED PROFESSIONAL ENGINEER
JAMES PHILIPP
No. C59614
Exp. 12-31-13
CIVIL
STATE OF CALIFORNIA

THE STATE OF CALIFORNIA OR ITS OFFICERS OR AGENTS SHALL NOT BE RESPONSIBLE FOR THE ACCURACY OR COMPLETENESS OF SCANNED COPIES OF THIS PLAN SHEET.

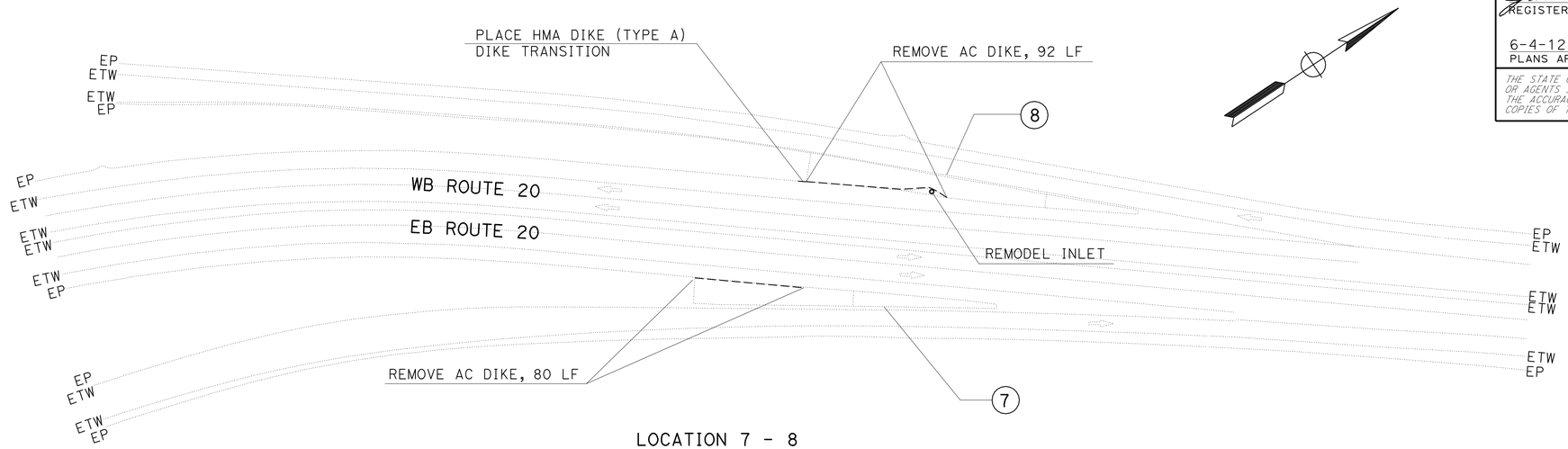

LOCATION 7 - 8

EB 20/49 TO EB 20 AT 20/49 SEPARATION
WB 20/49 TO WB 20 AT 20/49 SEPARATION

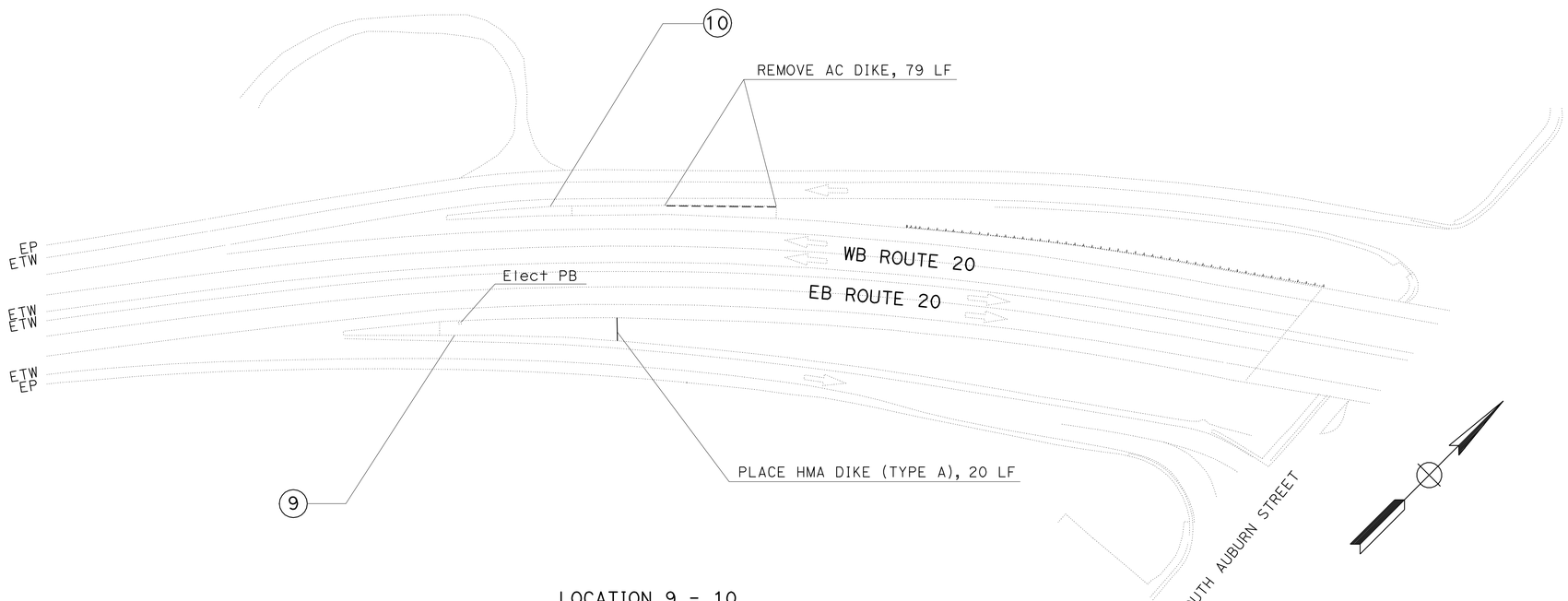

LOCATION 9 - 10

EB OFF RAMP TO SOUTH AUBURN STREET
WB ON RAMP FROM SOUTH AUBURN STREET

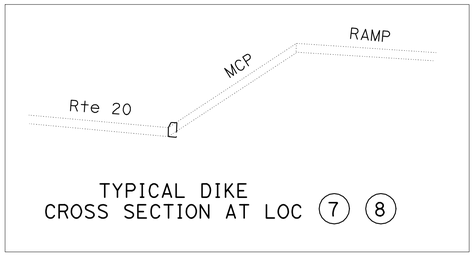

TYPICAL DIKE
CROSS SECTION AT LOC 7 8

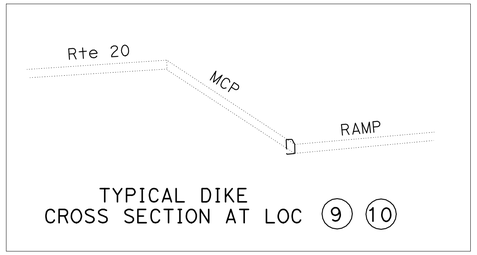

TYPICAL DIKE
CROSS SECTION AT LOC 9 10

DRAINAGE DETAILS

NO SCALE

DD-2

STATE OF CALIFORNIA - DEPARTMENT OF TRANSPORTATION
Caltrans
HYDRAULICS BRANCH

FUNCTIONAL SUPERVISOR: DENNIS JAGODA

CALCULATED-DESIGNED BY: JAMES PHILIPP
CHECKED BY

REVISED BY | DATE REVISED

LAST REVISION 00-00-00 | DATE PLOTTED => 30-AUG-2012 | TIME PLOTTED => 09:09

Dist	COUNTY	ROUTE	POST MILES TOTAL PROJECT	SHEET No.	TOTAL SHEETS
03	Nev	20	R4.1/R17.4	24	106

James M. Philipp 6-4-12
REGISTERED CIVIL ENGINEER DATE

6-4-12
PLANS APPROVAL DATE

REGISTERED PROFESSIONAL ENGINEER
JAMES PHILIPP
No. C59614
Exp. 12-31-13
CIVIL
STATE OF CALIFORNIA

THE STATE OF CALIFORNIA OR ITS OFFICERS OR AGENTS SHALL NOT BE RESPONSIBLE FOR THE ACCURACY OR COMPLETENESS OF SCANNED COPIES OF THIS PLAN SHEET.

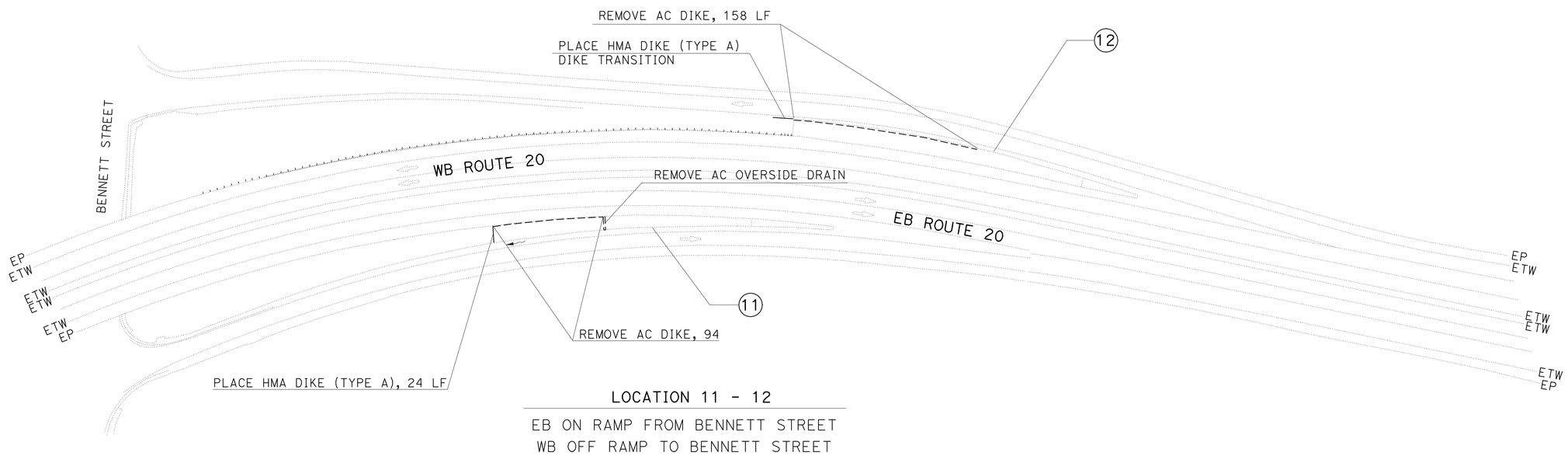

LOCATION 11 - 12

EB ON RAMP FROM BENNETT STREET
WB OFF RAMP TO BENNETT STREET

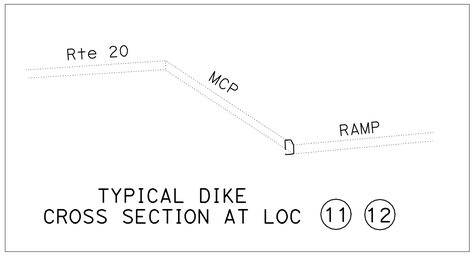

TYPICAL DIKE
CROSS SECTION AT LOC 11 12

DRAINAGE DETAILS

NO SCALE

DD-3

STATE OF CALIFORNIA - DEPARTMENT OF TRANSPORTATION
Caltrans
HYDRAULICS BRANCH

FUNCTIONAL SUPERVISOR: DENNIS JAGODA
CALCULATED-DESIGNED BY: JAMES PHILIPP
CHECKED BY
REVISED BY
DATE REVISED

LAST REVISION 00-00-00
DATE PLOTTED => 30-AUG-2012
TIME PLOTTED => 09:09

Dist	COUNTY	ROUTE	POST MILES TOTAL PROJECT	SHEET No.	TOTAL SHEETS
03	Nev	20	R4.1/R17.4	25	106

James M. Philipp 6-4-12
REGISTERED CIVIL ENGINEER DATE

6-4-12
PLANS APPROVAL DATE

REGISTERED PROFESSIONAL ENGINEER
JAMES PHILIPP
No. C59614
Exp. 12-31-13
CIVIL
STATE OF CALIFORNIA

THE STATE OF CALIFORNIA OR ITS OFFICERS OR AGENTS SHALL NOT BE RESPONSIBLE FOR THE ACCURACY OR COMPLETENESS OF SCANNED COPIES OF THIS PLAN SHEET.

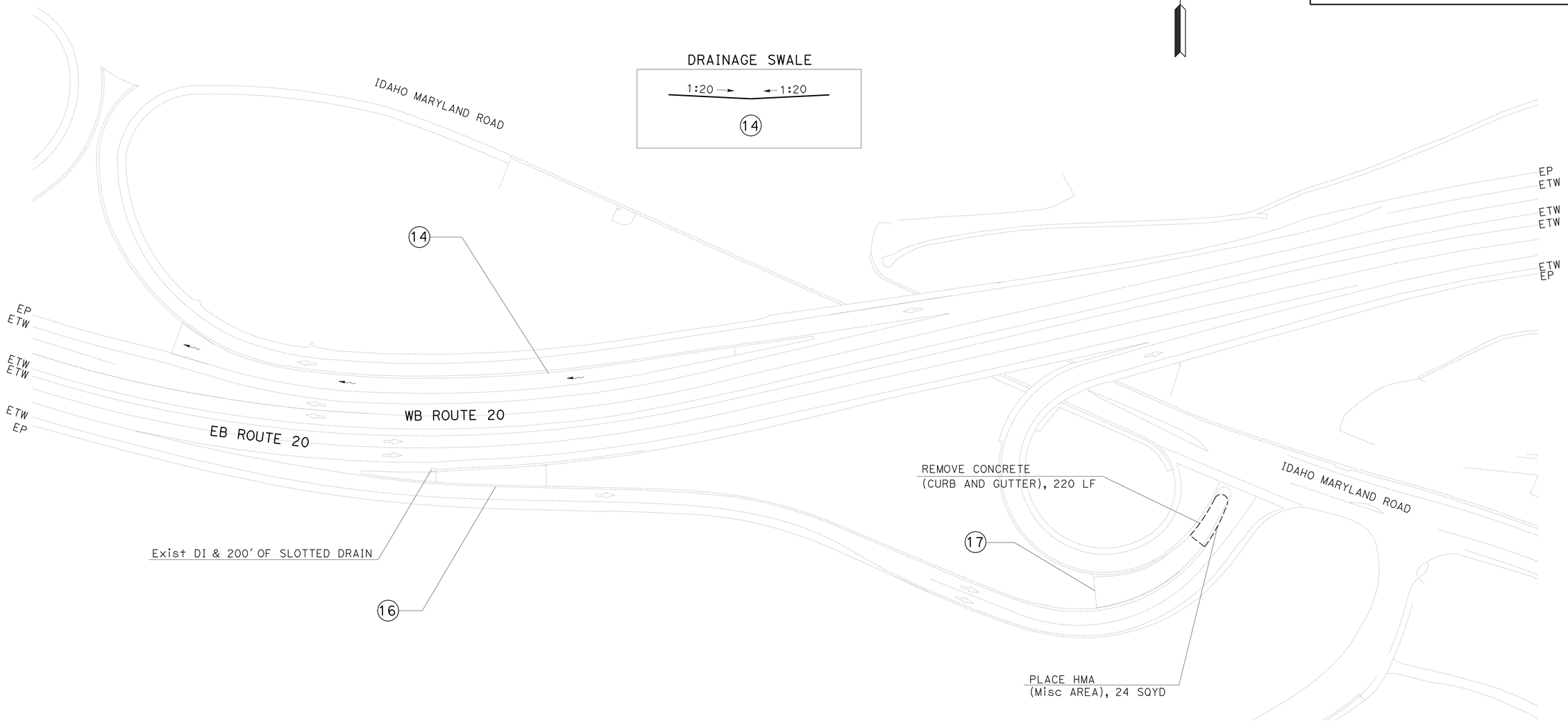

LOCATION 14 - 16 - 17

EB OFF RAMP TO IDAHO MARYLAND ROAD
WB OFF RAMP TO IDAHO MARYLAND ROAD
EB LOOP ON RAMP FROM IDAHO MARYLAND ROAD

DRAINAGE DETAILS

NO SCALE

DD-4

REVISED BY | DATE REVISED
JAMES PHILIPP
CALCULATED-DESIGNED BY | CHECKED BY
FUNCTIONAL SUPERVISOR
DENNIS JAGODA

STATE OF CALIFORNIA - DEPARTMENT OF TRANSPORTATION
Caltrans
HYDRAULICS BRANCH

LAST REVISION 00-00-00
DATE PLOTTED => 30-AUG-2012
TIME PLOTTED => 09:09

Dist	COUNTY	ROUTE	POST MILES TOTAL PROJECT	SHEET No.	TOTAL SHEETS
03	Nev	20	R4.1/R17.4	26	106

James M. Philipp 6-4-12
REGISTERED CIVIL ENGINEER DATE

6-4-12
PLANS APPROVAL DATE

REGISTERED PROFESSIONAL ENGINEER
JAMES PHILIPP
No. C59614
Exp. 12-31-13
CIVIL
STATE OF CALIFORNIA

THE STATE OF CALIFORNIA OR ITS OFFICERS OR AGENTS SHALL NOT BE RESPONSIBLE FOR THE ACCURACY OR COMPLETENESS OF SCANNED COPIES OF THIS PLAN SHEET.

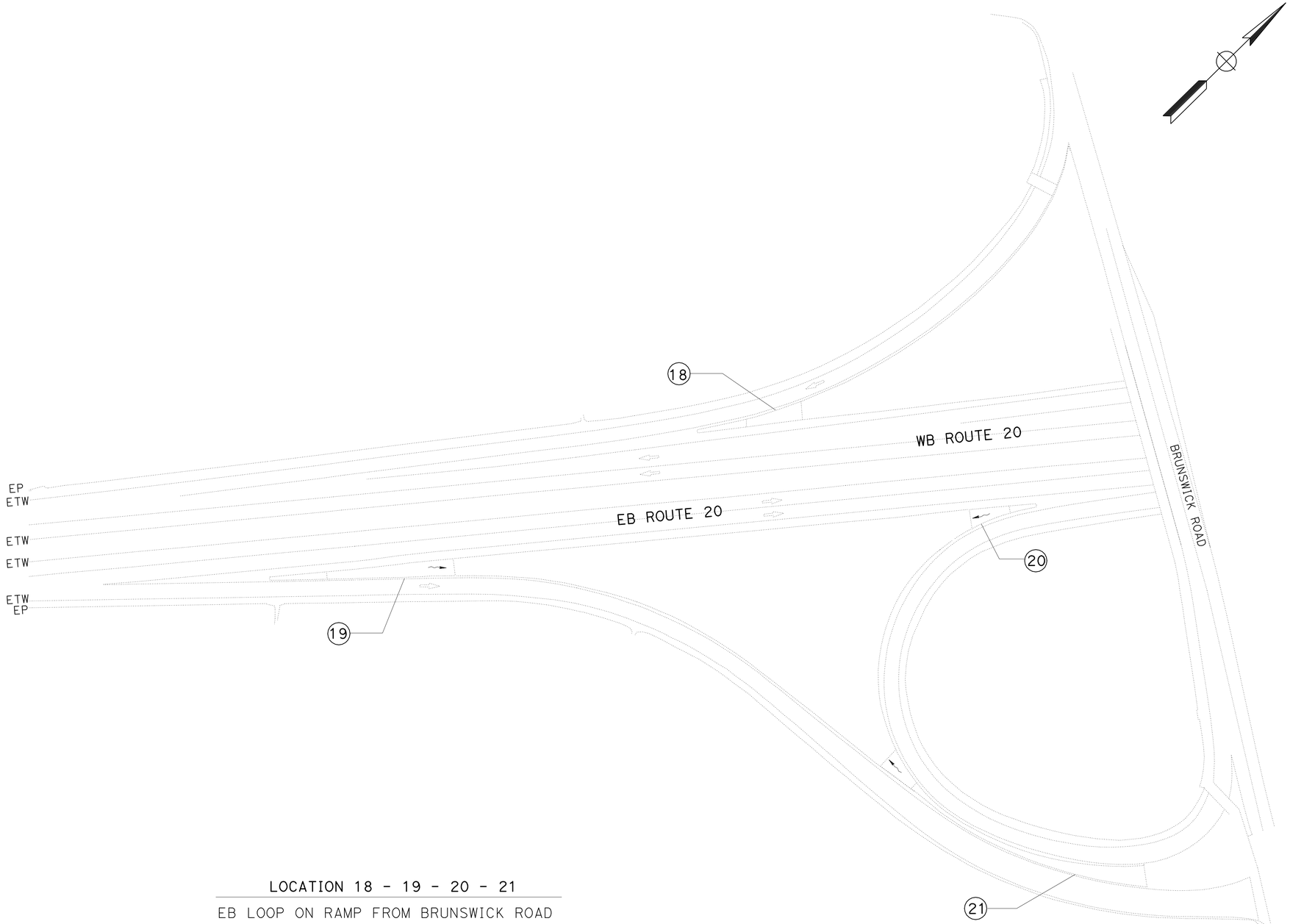

DRAINAGE SWALE

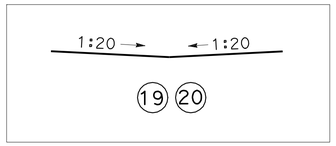

LOCATION 18 - 19 - 20 - 21

EB LOOP ON RAMP FROM BRUNSWICK ROAD
WB DIRECT ON RAMP FROM BRUNSWICK ROAD
EB OFF RAMP TO BRUNSWICK ROAD

DRAINAGE DETAILS

NO SCALE

DD-5

STATE OF CALIFORNIA - DEPARTMENT OF TRANSPORTATION
Caltrans HYDRAULICS BRANCH

FUNCTIONAL SUPERVISOR: DENNIS JAGODA
CALCULATED-DESIGNED BY: JAMES PHILIPP
CHECKED BY
REVISED BY
DATE REVISED

LAST REVISION 00-00-00
DATE PLOTTED => 30-AUG-2012
TIME PLOTTED => 09:09

Dist	COUNTY	ROUTE	POST MILES TOTAL PROJECT	SHEET No.	TOTAL SHEETS
03	Nev	20	R4.1/R17.4	27	106

James M. Philipp 6-4-12
REGISTERED CIVIL ENGINEER DATE

6-4-12
PLANS APPROVAL DATE

REGISTERED PROFESSIONAL ENGINEER
JAMES PHILIPP
No. C59614
Exp. 12-31-13
CIVIL
STATE OF CALIFORNIA

THE STATE OF CALIFORNIA OR ITS OFFICERS OR AGENTS SHALL NOT BE RESPONSIBLE FOR THE ACCURACY OR COMPLETENESS OF SCANNED COPIES OF THIS PLAN SHEET.

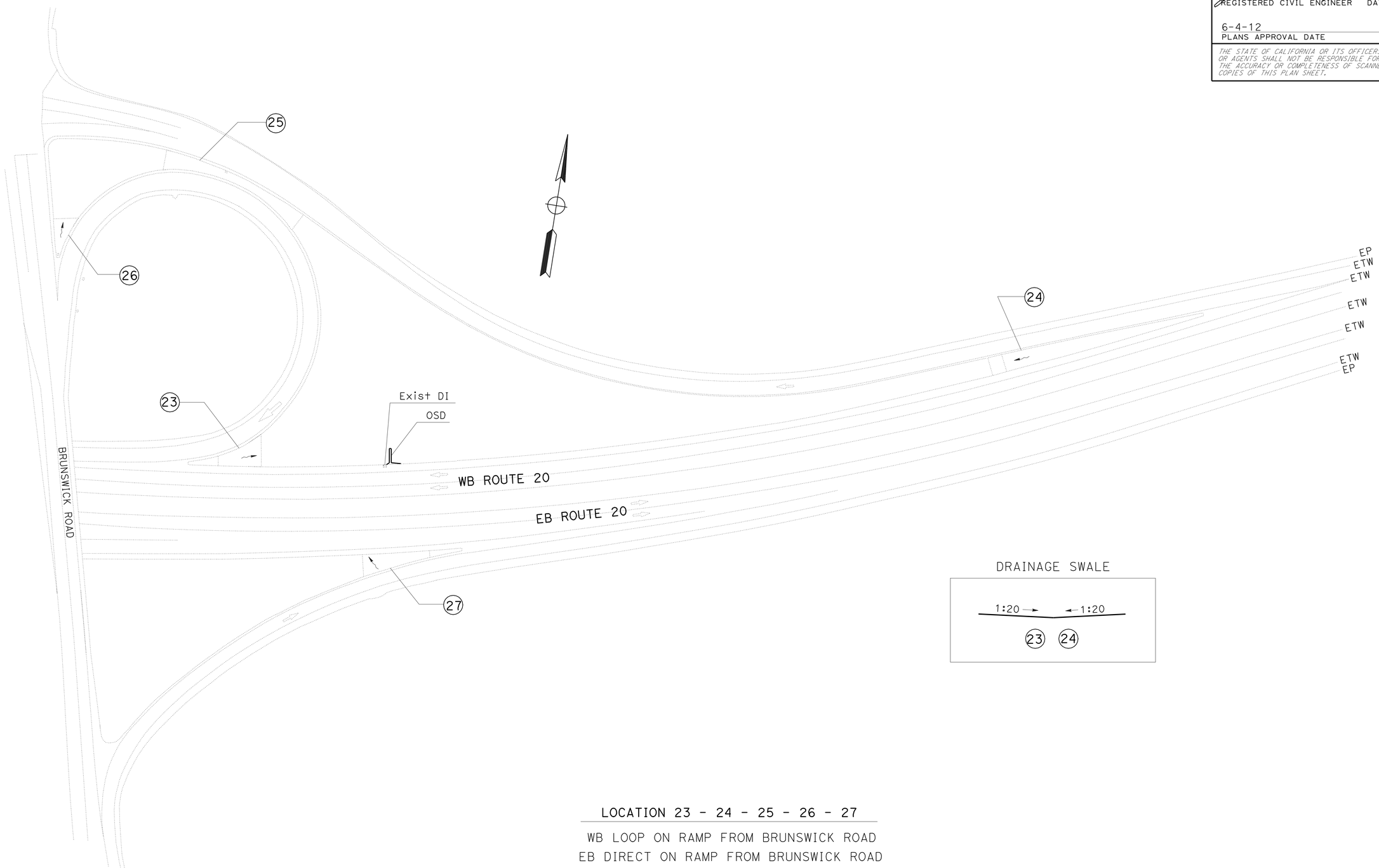

LOCATION 23 - 24 - 25 - 26 - 27

WB LOOP ON RAMP FROM BRUNSWICK ROAD
EB DIRECT ON RAMP FROM BRUNSWICK ROAD

DRAINAGE DETAILS

NO SCALE

DD-6

STATE OF CALIFORNIA - DEPARTMENT OF TRANSPORTATION
Caltrans
HYDRAULICS BRANCH

FUNCTIONAL SUPERVISOR: DENNIS JAGODA
CALCULATED-DESIGNED BY: JAMES PHILIPP
CHECKED BY
REVISED BY
DATE REVISED

LAST REVISION 00-00-00
DATE PLOTTED => 30-AUG-2012
TIME PLOTTED => 09:09

Dist	COUNTY	ROUTE	POST MILES TOTAL PROJECT	SHEET No.	TOTAL SHEETS
03	Nev	20	R4.1/R17.4	28	106

James M. Philipp 6-4-12
REGISTERED CIVIL ENGINEER DATE

6-4-12
PLANS APPROVAL DATE

REGISTERED PROFESSIONAL ENGINEER
JAMES PHILIPP
No. C59614
Exp. 12-31-13
CIVIL
STATE OF CALIFORNIA

THE STATE OF CALIFORNIA OR ITS OFFICERS OR AGENTS SHALL NOT BE RESPONSIBLE FOR THE ACCURACY OR COMPLETENESS OF SCANNED COPIES OF THIS PLAN SHEET.

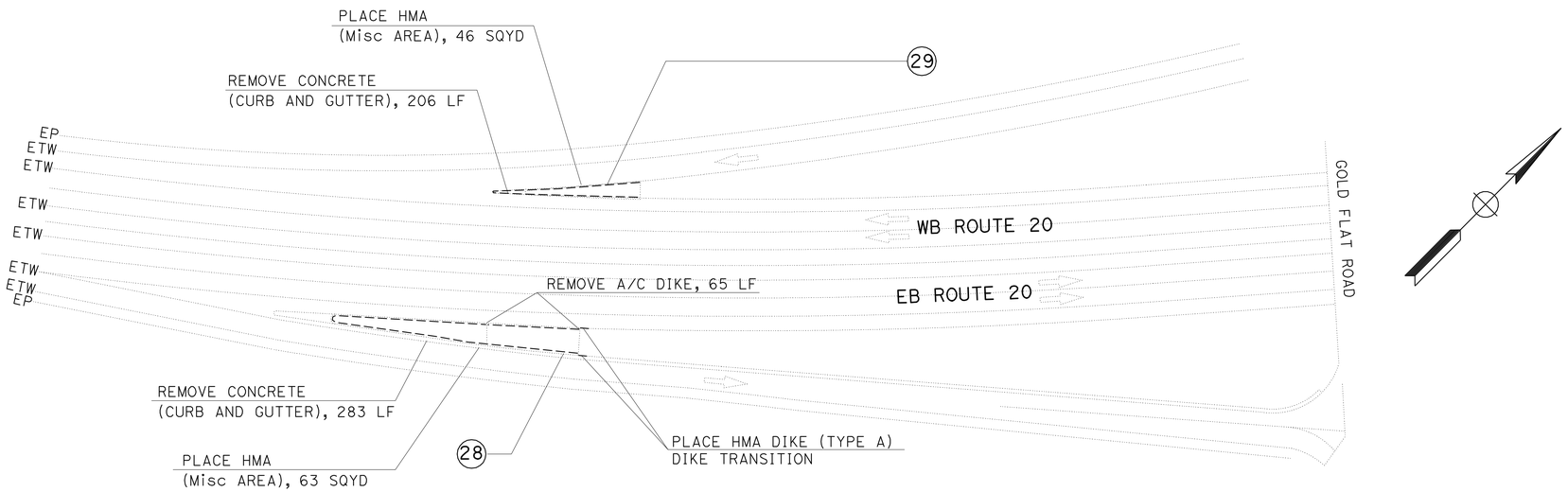

LOCATION 28 - 29

WB ON RAMP FROM GOLD FLAT ROAD
EB OFF RAMP TO GOLD FLAT ROAD

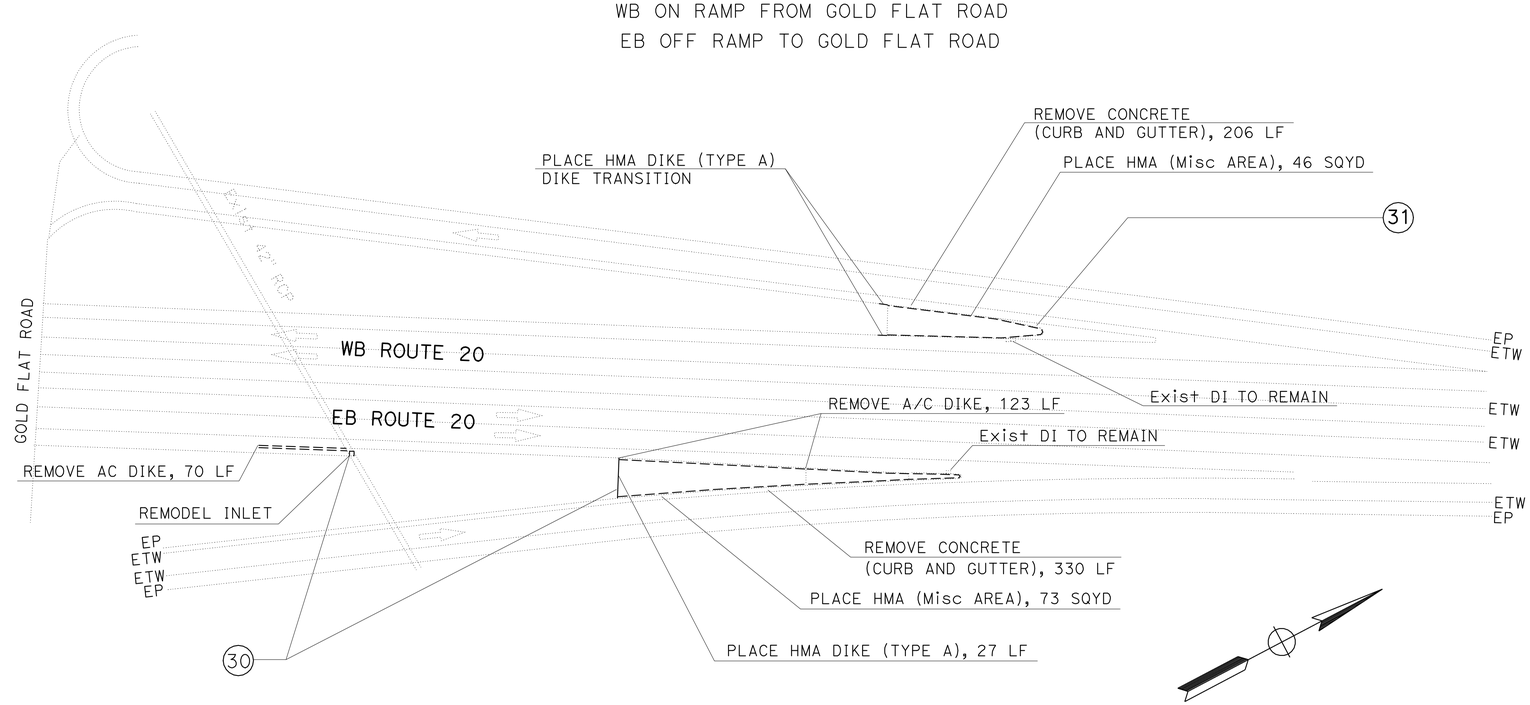

LOCATION 30 - 31

WB OFF RAMP TO GOLD FLAT ROAD
EB ON RAMP FROM GOLD FLAT ROAD

DRAINAGE DETAILS

NO SCALE

DD-7

STATE OF CALIFORNIA - DEPARTMENT OF TRANSPORTATION
Caltrans®
HYDRAULICS BRANCH

FUNCTIONAL SUPERVISOR: DENNIS JAGODA
CALCULATED-DESIGNED BY: JAMES PHILIPP
CHECKED BY:
REVISED BY:
DATE REVISED:

LAST REVISION 00-00-00
DATE PLOTTED => 30-AUG-2012
TIME PLOTTED => 09:09

Dist	COUNTY	ROUTE	POST MILES TOTAL PROJECT	SHEET No.	TOTAL SHEETS
03	Nev	20	R4.1/R17.4	29	106

James M. Philipp 6-4-12
REGISTERED CIVIL ENGINEER DATE

6-4-12
PLANS APPROVAL DATE

REGISTERED PROFESSIONAL ENGINEER
JAMES PHILIPP
No. C59614
Exp. 12-31-13
CIVIL
STATE OF CALIFORNIA

THE STATE OF CALIFORNIA OR ITS OFFICERS OR AGENTS SHALL NOT BE RESPONSIBLE FOR THE ACCURACY OR COMPLETENESS OF SCANNED COPIES OF THIS PLAN SHEET.

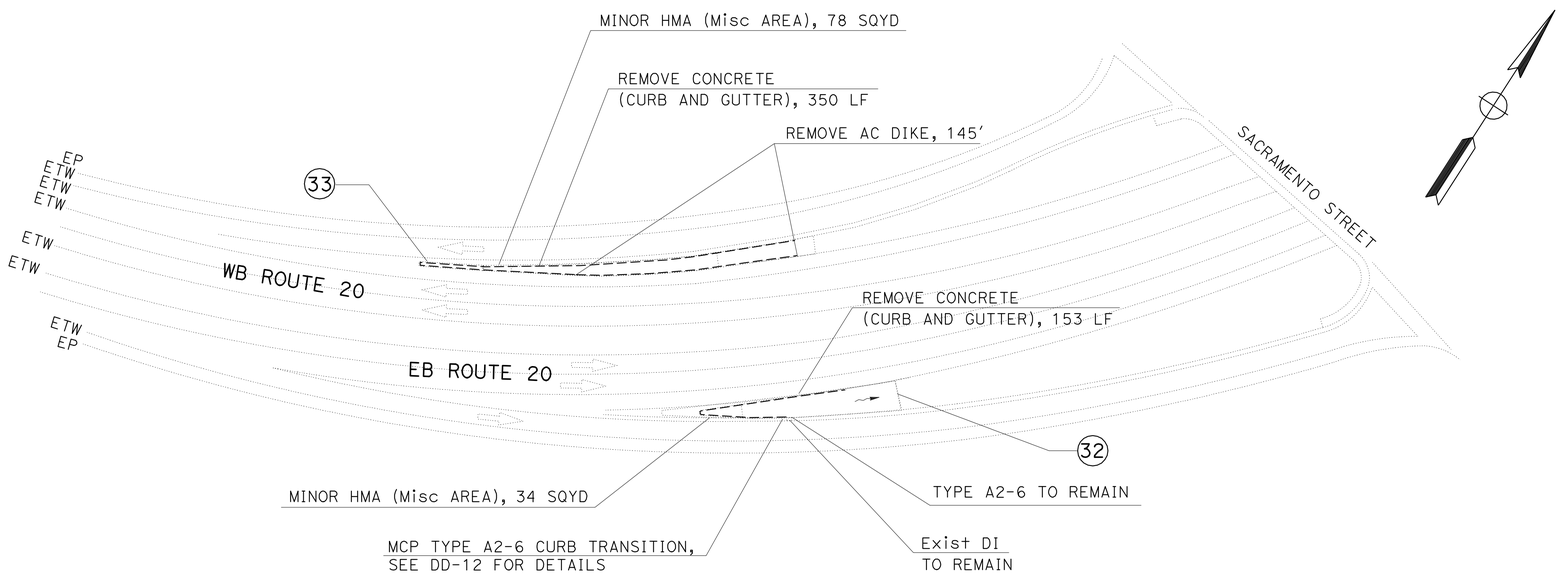

LOCATION 32 - 33

WB ON RAMP FROM SACRAMENTO STREET
EB OFF RAMP TO SACRAMENTO STREET

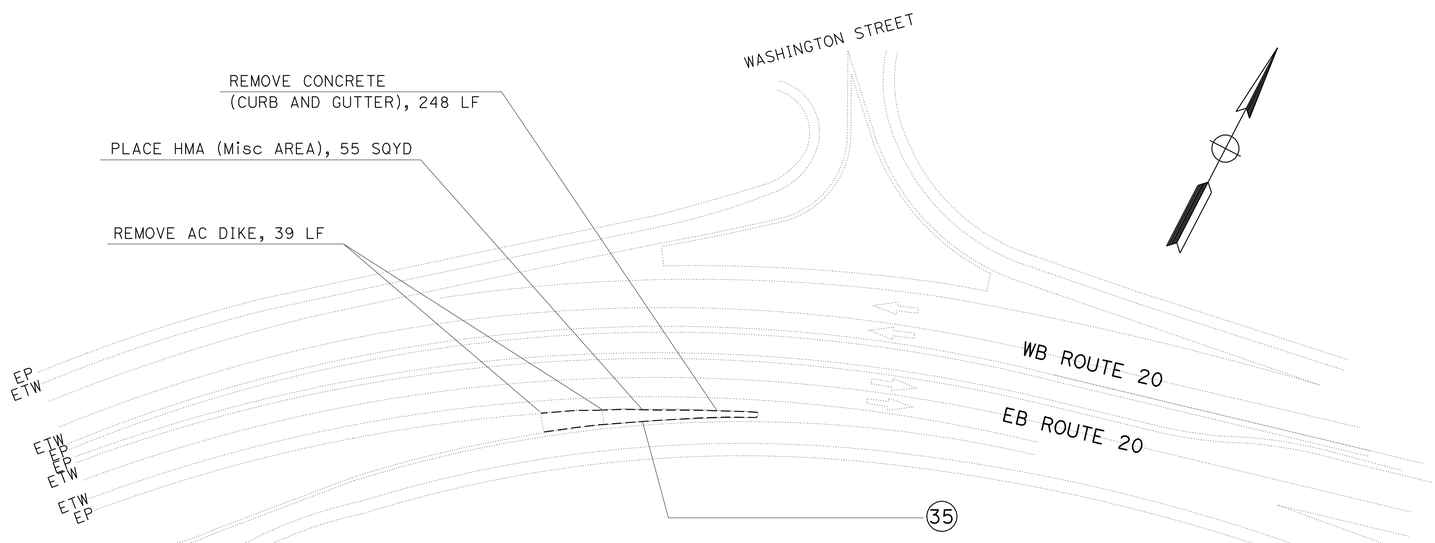

LOCATION 35

EB ON RAMP FROM WASHINGTON STREET

DRAINAGE DETAILS

NO SCALE

DD-8

STATE OF CALIFORNIA - DEPARTMENT OF TRANSPORTATION
Caltrans
HYDRAULICS BRANCH

FUNCTIONAL SUPERVISOR: DENNIS JAGODA
CALCULATED-DESIGNED BY: JAMES PHILIPP
CHECKED BY
REVISED BY
DATE REVISED

LAST REVISION 00-00-00 | DATE PLOTTED => 30-AUG-2012 | TIME PLOTTED => 09:09

Dist	COUNTY	ROUTE	POST MILES TOTAL PROJECT	SHEET No.	TOTAL SHEETS
03	Nev	20	R4.1/R17.4	30	106

James M. Philipp 6-4-12
REGISTERED CIVIL ENGINEER DATE

6-4-12
PLANS APPROVAL DATE

REGISTERED PROFESSIONAL ENGINEER
JAMES PHILIPP
No. C59614
Exp. 12-31-13
CIVIL
STATE OF CALIFORNIA

THE STATE OF CALIFORNIA OR ITS OFFICERS OR AGENTS SHALL NOT BE RESPONSIBLE FOR THE ACCURACY OR COMPLETENESS OF SCANNED COPIES OF THIS PLAN SHEET.

NOTES:

SEE SHEET DD-11 ON REMODEL INLET DETAILS

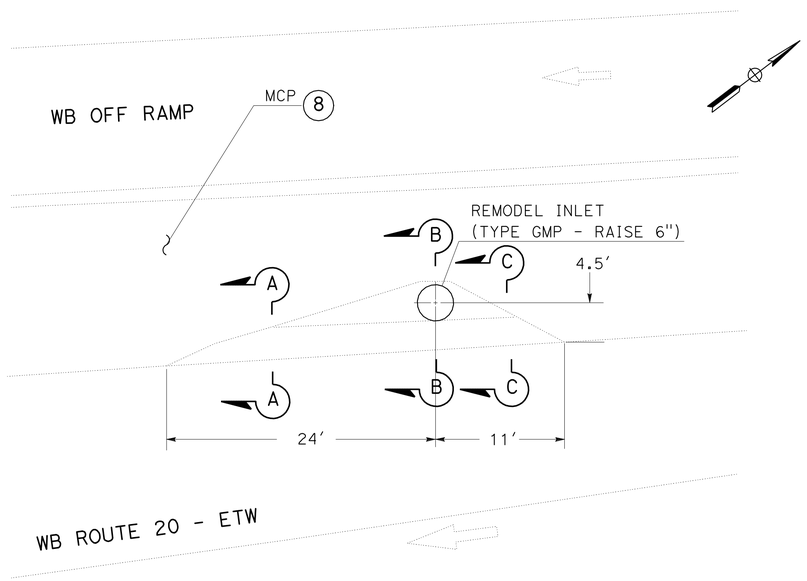

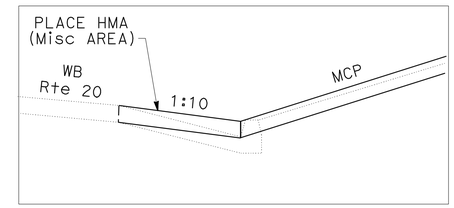

SECTION A - A

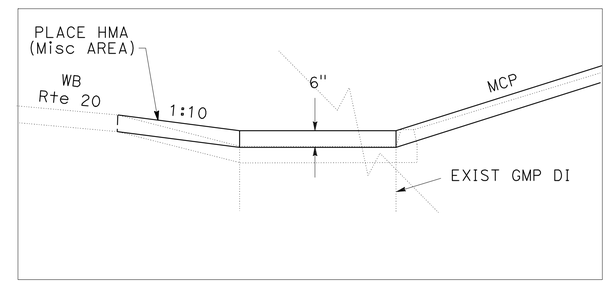

SECTION B - B

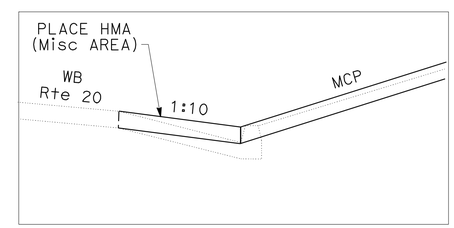

SECTION C - C

PM 12.47 WB

WB 20/49 TO WB 20 AT 20/49 SEPARATION

DRAINAGE DETAILS

NO SCALE

DD-9

STATE OF CALIFORNIA - DEPARTMENT OF TRANSPORTATION
Caltrans
HYDRAULICS BRANCH

FUNCTIONAL SUPERVISOR: DENNIS JAGODA

CALCULATED-DESIGNED BY: JAMES PHILIPP
CHECKED BY

REVISED BY
DATE REVISED

LAST REVISION 00-00-00
DATE PLOTTED => 30-AUG-2012
TIME PLOTTED => 09:09

Dist	COUNTY	ROUTE	POST MILES TOTAL PROJECT	SHEET No.	TOTAL SHEETS
03	Nev	20	R4.1/R17.4	31	106

James M. Philipp 6-4-12
REGISTERED CIVIL ENGINEER DATE

6-4-12
PLANS APPROVAL DATE

REGISTERED PROFESSIONAL ENGINEER
JAMES PHILIPP
No. C59614
Exp. 12-31-13
CIVIL
STATE OF CALIFORNIA

THE STATE OF CALIFORNIA OR ITS OFFICERS OR AGENTS SHALL NOT BE RESPONSIBLE FOR THE ACCURACY OR COMPLETENESS OF SCANNED COPIES OF THIS PLAN SHEET.

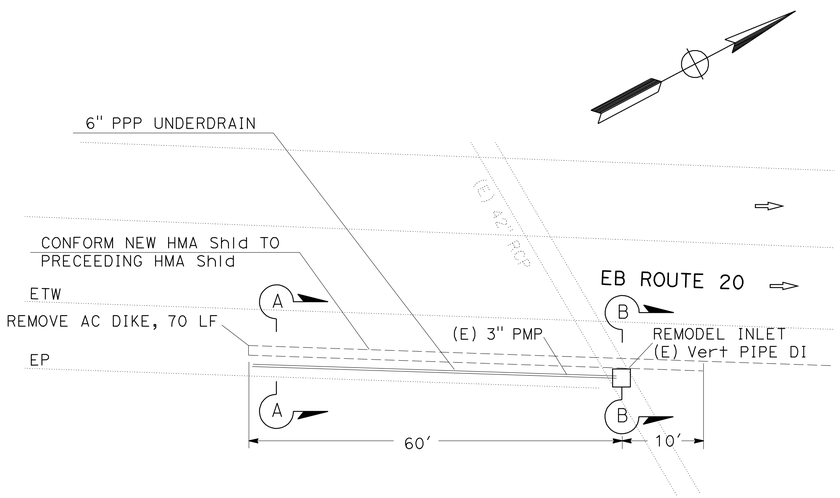

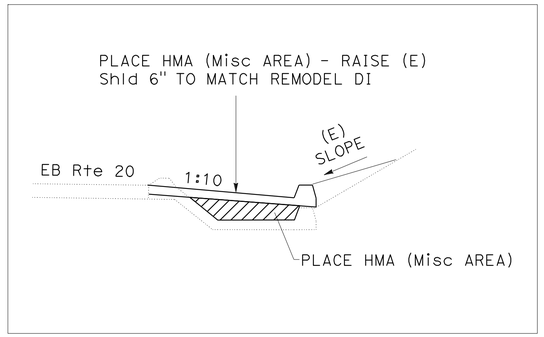

SECTION A-A

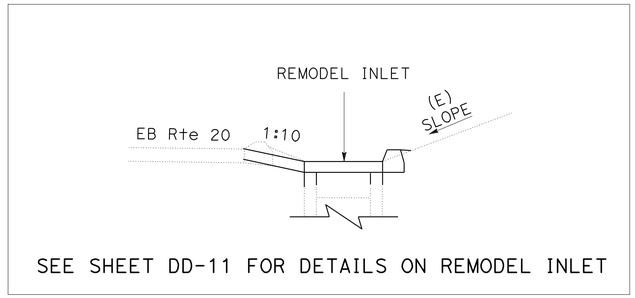

SEE SHEET DD-11 FOR DETAILS ON REMODEL INLET

SECTION B-B

PM 15.93 EB

MAIN LINE JUST EAST OF GOLD FLAT ROAD OC

MCP LOCATION 30

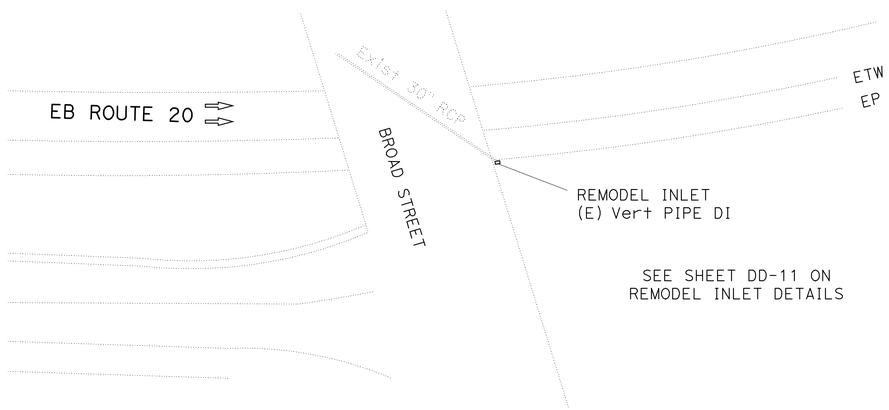

PM 16.99 EB

MAIN LINE ON EAST SIDE OF BROAD STREET OC

DRAINAGE DETAILS

NO SCALE

DD-10

STATE OF CALIFORNIA - DEPARTMENT OF TRANSPORTATION
Caltrans
HYDRAULICS BRANCH

FUNCTIONAL SUPERVISOR: DENNIS JAGODA

JAMES PHILIPP

CALCULATED-DESIGNED BY | CHECKED BY | REVISED BY | DATE REVISED

LAST REVISION 00-00-00 | DATE PLOTTED => 30-AUG-2012 | TIME PLOTTED => 09:09

Dist	COUNTY	ROUTE	POST MILES TOTAL PROJECT	SHEET No.	TOTAL SHEETS
03	Nev	20	R4.1/R17.4	32	106

James M. Philipp 6-4-12
REGISTERED CIVIL ENGINEER DATE

6-4-12
PLANS APPROVAL DATE

REGISTERED PROFESSIONAL ENGINEER
JAMES PHILIPP
No. C59614
Exp. 12-31-13
CIVIL
STATE OF CALIFORNIA

THE STATE OF CALIFORNIA OR ITS OFFICERS OR AGENTS SHALL NOT BE RESPONSIBLE FOR THE ACCURACY OR COMPLETENESS OF SCANNED COPIES OF THIS PLAN SHEET.

NOTES:

1. REMOVE 12" OF CONCRETE FROM UPPER SECTION OF DI, DRILL AND GROUT NEW REINFORCEMENT 4" INTO (E) DI WALLS.
2. WALLS SHALL BE REINFORCED AS DETAILED IN STD. PLAN D73.
3. SEE STANDARD PLANS D77A & D77B FOR GRATE AND FRAME DETAILS AND WEIGHT OF Misc IRON AND STEEL.

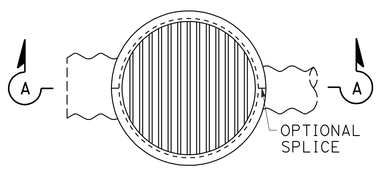

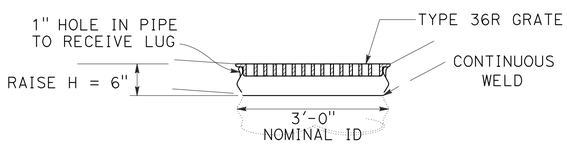

SECTION A-A

REMODEL INLET (TYPE GMP)

PM 12.47 WB @ WB 20/49 SEPARATION

MCP LOCATION 8

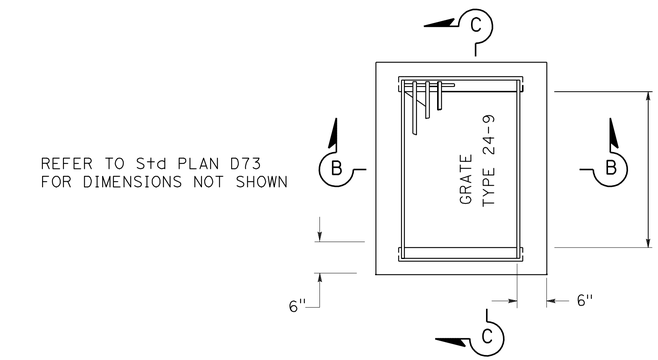

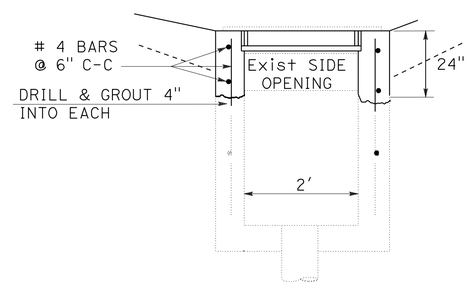

SECTION B-B

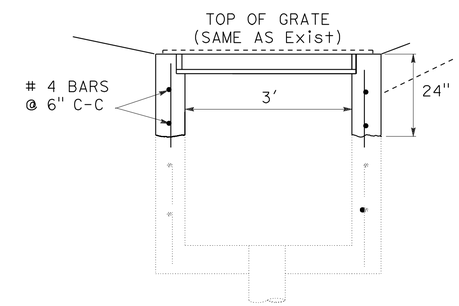

SECTION C-C

REMODEL INLET (Exist VERTICAL PIPE DI)

PM 15.93 EB ON EAST SIDE OF GOLD FLAT ROAD OC 17-82

PM 16.99 EB ON EAST SIDE OF BROAD STREET OC 17-55

MCP LOCATION 30

DRAINAGE DETAILS

NO SCALE

DD-11

STATE OF CALIFORNIA - DEPARTMENT OF TRANSPORTATION
Caltrans HYDRAULICS BRANCH

FUNCTIONAL SUPERVISOR: DENNIS JAGODA
CALCULATED-DESIGNED BY: JAMES PHILIPP
CHECKED BY
REVISED BY
DATE REVISED

LAST REVISION 00-00-00
DATE PLOTTED => 30-AUG-2012
TIME PLOTTED => 09:09

Dist	COUNTY	ROUTE	POST MILES TOTAL PROJECT	SHEET No.	TOTAL SHEETS
03	Nev	20	R4.1/R17.4	33	106

James M. Philipp 6-4-12
REGISTERED CIVIL ENGINEER DATE

6-4-12
PLANS APPROVAL DATE

REGISTERED PROFESSIONAL ENGINEER
JAMES PHILIPP
No. C59614
Exp. 12-31-13
CIVIL
STATE OF CALIFORNIA

THE STATE OF CALIFORNIA OR ITS OFFICERS OR AGENTS SHALL NOT BE RESPONSIBLE FOR THE ACCURACY OR COMPLETENESS OF SCANNED COPIES OF THIS PLAN SHEET.

NOTES:

1. SEE REVISED Std PLAN A87A FOR DETAILS NOT SHOWN ON TYPE A2 CURBS
2. SEE LANDSCAPE PLANS FOR MCP DETAILS.

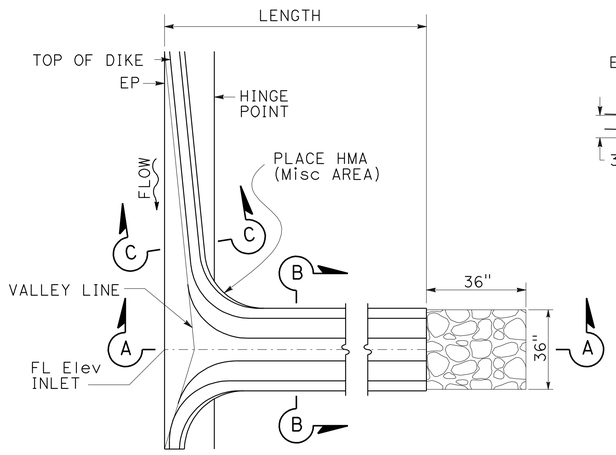

PLAN

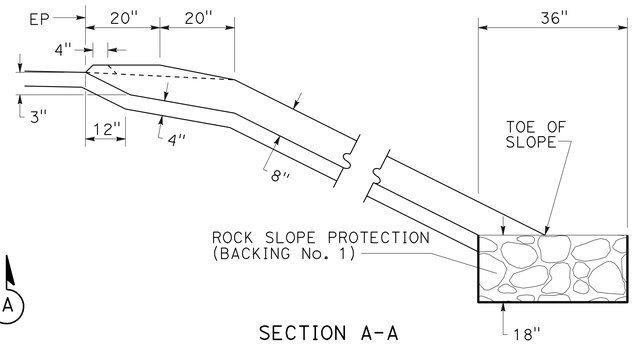

SECTION A-A

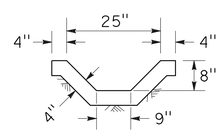

SECTION B-B

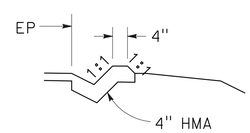

SECTION C-C

PLACE HMA (Misc AREA)

OVERSIDE DRAIN (OSD)

(FOR DETAILS NOT SHOWN SEE Std PLAN D87D)

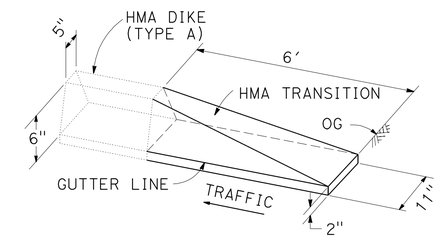

HMA DIKE (TYPE A) APPROACH TRANSITION

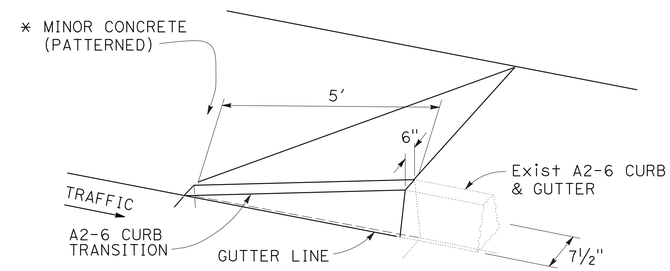

MINOR Conc (PATTERNED) TYPE A2-6 CURB TRANSITION

EB PM 16.67 SACRAMENTO St OFF RAMP

* PAYMENT QUANTITY INCLUDED ON SHEET LD-12 AT MCP LOCATION 32

DRAINAGE DETAILS

NO SCALE

DD-12

STATE OF CALIFORNIA - DEPARTMENT OF TRANSPORTATION
Caltrans® HYDRAULICS BRANCH
FUNCTIONAL SUPERVISOR DENNIS JAGODA
CALCULATED-DESIGNED BY JAMES PHILIPP CHECKED BY
REVISED BY DATE REVISED

LAST REVISION 00-00-00 DATE PLOTTED => 30-AUG-2012 TIME PLOTTED => 09:09

Dist	COUNTY	ROUTE	POST MILES TOTAL PROJECT	SHEET No.	TOTAL SHEETS
03	Nev	20	R4.1/R17.4	34	106

James M Philipp 6-4-12
REGISTERED CIVIL ENGINEER DATE

6-4-12
PLANS APPROVAL DATE

REGISTERED PROFESSIONAL ENGINEER
JAMES PHILIPP
No. C59614
Exp. 12-31-13
CIVIL
STATE OF CALIFORNIA

THE STATE OF CALIFORNIA OR ITS OFFICERS OR AGENTS SHALL NOT BE RESPONSIBLE FOR THE ACCURACY OR COMPLETENESS OF SCANNED COPIES OF THIS PLAN SHEET.

NOTE:

1. SEE LANDSCAPE PLANS FOR MINOR CONCRETE (PATTERNED) DETAILS.

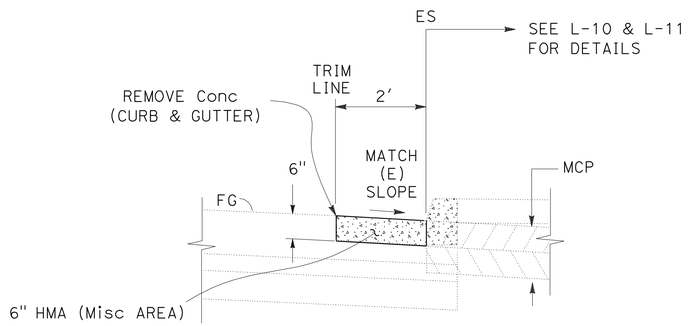

TRIM LINE AT
REMOVE CONCRETE (CURB AND GUTTER)

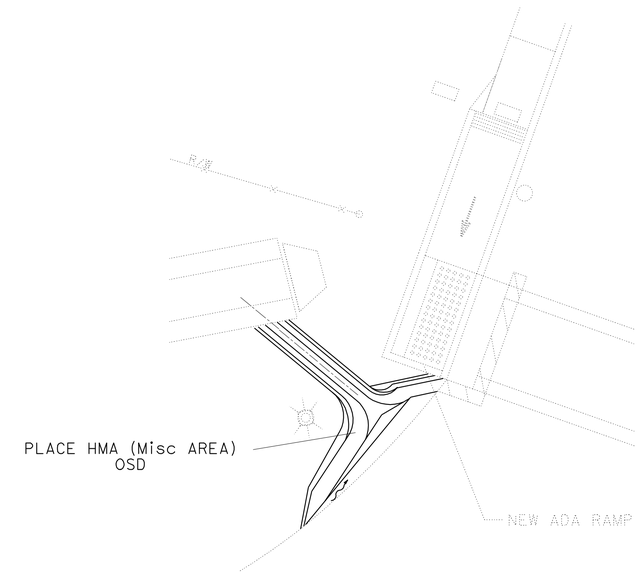

MILL St

OSD DETAIL

MCP LOCATION (2)

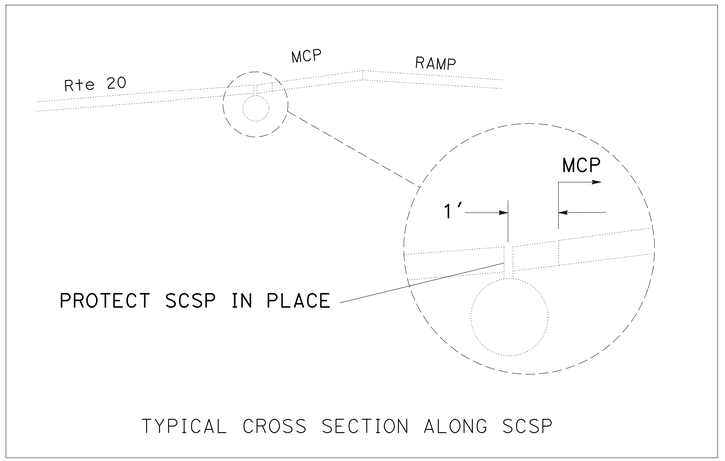

MCP LOCATION (16)

DRAINAGE DETAILS

NO SCALE

DD-13

STATE OF CALIFORNIA - DEPARTMENT OF TRANSPORTATION
Caltrans® HYDRAULICS BRANCH

FUNCTIONAL SUPERVISOR: DENNIS JAGODA

CALCULATED-DESIGNED BY: JAMES PHILIPP
CHECKED BY

REVISED BY | DATE REVISED

LAST REVISION 00-00-00 | DATE PLOTTED => 30-AUG-2012 | TIME PLOTTED => 09:09

Dist	COUNTY	ROUTE	POST MILES TOTAL PROJECT	SHEET No.	TOTAL SHEETS
03	Nev	20	R4.1/R17.4	35	106

James M. Philipp 6-4-12
REGISTERED CIVIL ENGINEER DATE

6-4-12
PLANS APPROVAL DATE

REGISTERED PROFESSIONAL ENGINEER
JAMES PHILIPP
No. C59614
Exp. 12-31-13
CIVIL
STATE OF CALIFORNIA

THE STATE OF CALIFORNIA OR ITS OFFICERS OR AGENTS SHALL NOT BE RESPONSIBLE FOR THE ACCURACY OR COMPLETENESS OF SCANNED COPIES OF THIS PLAN SHEET.

NOTES:

1. FOR REMODEL VPDI TO G1 DI USE TYPE 24-9X GRATE.

(N) - NOT A SEPARATE PAY ITEM, FOR INFORMATION ONLY
* FOR TOTAL QUANTITY, SEE SHEET Q-2

REMODEL INLETS

MCP LOCATION NUMBER	LOCATION PM	DIRECTION	REMODEL INLET	(N) MISCELLANEOUS IRON AND STEEL	(N) INLET FRAME AND GRATE	(N) MINOR CONCRETE	RELAY FLUME DOWNDRAIN	(N) 36" CSP 0.138" THICK)	REMOVE AC DIKE	6" PPP UNDERDRAIN	DESCRIPTION
			EA	LB	EA	CY	EA	LF	LF	LF	
8	R12.47	WB	1	215				0.5			RAISE GMP DI
30	R15.93	EB	1	263	1	0.6			70	60	REMODEL VPDI TO G1 DI
	R16.16	WB					1				RELAY FLUME DD
	R16.65	WB					1				RELAY FLUME DD
	R16.99	EB	1	263	1	0.6					REMODEL VPDI TO G1 DI
SUBTOTAL			3	741	2	1.2	2	0.5	70*	60	
TOTAL			3				2		-	60	

REMOVE/PLACE DIKE OR CURB AT GORES

MCP LOCATION NUMBER	REMOVE AC DIKE	REMOVE CONCRETE (CURB AND GUTTER)	AT REMOVE CURB LOCATIONS: PLACE HMA (MISCELLANEOUS AREA)	AT REMOVE CURB LOCATIONS: MINOR HMA	PLACE DIKE: PLACE HMA DIKE (TYPE A)	PLACE DIKE: MINOR HMA	(N) HMA DIKE APPROACH TRANSITION	DESCRIPTION
	LF	LF	SQYD	TON	LF	TON	EA	
7	80							EB 20/49 SEPARATION ON-RAMP
8	92				6	0.2	1	WB 20/49 SEPARATION OFF-RAMP, DIKE TRANSITION
9					20	0.6		EB S AUBURN St OFF-RAMP
10	79							WB S AUBURN St ON-RAMP
11	94				24	0.7		EB BENNETT St OFF-RAMP
12	158				6	0.2	1	WB BENNETT St OFF-RAMP, DIKE TRANSITION
17		220	24	8.0				EB IDAHO MARYLAND Rd OFF-RAMP
28	65	283	63	21.0	12	0.2	2	EB GOLD FLAT Rd OFF-RAMP, DIKE TRANSITION
29		206	46	16.0				WB GOLD FLAT Rd ON-RAMP
30	123	330	73	25.0	27	0.8		EB GOLD FLAT Rd ON-RAMP
31		206	46	16.0	20	0.6		WB GOLD FLAT Rd OFF-RAMP
32		153	34	11.0	12	0.2	2	EB SACRAMENTO St OFF-RAMP, DIKE TRANSITION
33	145	350	78	26.0				WB SACRAMENTO St ON-RAMP
34		166	37	12.0	24	0.7		WB BROAD St ON-RAMP
35	39	248	55	19.0				EB WASHINGTON-RAMP St ON-RAMP
SUBTOTAL	875*	2162	456*	154.0*	131*	4.2*	6	
TOTAL	-	2162	-	-	-	-		

HMA OVERSIDE DRAIN

	LOCATION	POST MILE	(N) LENGTH	REMOVE AC OVERSIDE DRAIN	PLACE HMA (MISCELLANEOUS AREA)	MINOR HMA	RSP (No. 1, METHOD B)	RSP FABRIC ROCK SLOPE PROTECTION FABRIC (CLASS 8)
			LF	EA	SQYD	TON	CY	SQYD
EASTBOUND (EB)	ROUTE 20	R4.39	20	1	9	2.0	0.5	13.5
	ROUTE 20	R10.35	15	1	7	1.6	0.5	13.5
	ROUTE 20	R10.92	15	1	7	1.6	0.5	13.5
	ROUTE 20	R11.19	15	1	7	1.6		
	ROUTE 20 TO AND AROUND DI	R12.17	4	1	4	0.8		
	ROUTE 20/49	R13.73	20	1	9	2.0		
	ROUTE 20/49	R14.52	15	1	7	1.6		
	BRUNSWICK Rd OFF-RAMP	R14.64	15	1	7	1.6		
	BRUNSWICK Rd OFF-RAMP	R14.71	15	1	7	1.6		
	BRUNSWICK Rd LOOP ON-RAMP EB	R14.74	15	1	7	1.6		
	BRUNSWICK Rd SLIP ON-RAMP EB	R14.85	3	1	3	0.7		
	BRIDGE MBGR OVER VALLEY TO DD	R15.03	3	1	3	0.7		
	ROUTE 20/49	R15.21	15	1	7	1.6		
	ROUTE 20/49 NEW OSD	R15.45	15		7	1.6		
	ROUTE 20/49 TO DD	R15.59	3	1	3	0.7		
	GOLD FLAT Rd SLIP ON-RAMP EB	R16.05	15	1	7	1.6	0.5	13.5
	ROUTE 20/49	R16.34	15	1	7	1.6		
	REMOVE 3' DD	R16.56	3	1	3	0.7	0.5	13.5
	ROUTE 20/49	R17.40	15	1	7	1.6		
SUBTOTAL (EB)				18	118	26.8	2.5	67.5
WESTBOUND (WB)	ROUTE 20	R10.16	15	1	7	1.6		
	ROUTE 20	R10.36	15	1	7	1.6	0.5	13.5
	WB OFF-RAMP TO MILL St NEW OSD	R12.09	15		7	1.6	0.5	13.5
	WB ROUTE 20 SLIP OFF-RAMP	R12.46	15	1	7	1.6		
	WB ROUTE 20 SLIP OFF-RAMP	R12.47	15	1	7	1.6		
	EAST MAIN St WB SLIP OFF-RAMP	R13.47	15	1	7	1.6		
	EAST MAIN St WB SLIP OFF-RAMP	R13.49	15	1	7	1.6	0.5	13.5
	BRUNSWICK Rd WB SLIP ON-RAMP	R14.66	15	1	7	1.6	0.5	13.5
	BRUNSWICK Rd WB LOOP ON-RAMP	R14.82	15	1	7	1.6		
	ROUTE 20 - NEW OSD	R14.86	15		7	1.6		
	BRUNSWICK Rd WB SLIP OFF-RAMP	R14.96	15	1	7	1.6		
	ROUTE 20/49	R15.23	15	1	7	1.6	0.5	13.5
	ROUTE 20/49	R15.49	15	1	7	1.6		
	ROUTE 20, RELAY FLUME DD	R16.16	15	1	7	1.6		
	ROUTE 20/49	R16.31	15	1	7	1.6	0.5	13.5
	ROUTE 20/49	R16.46	15	1	7	1.6		
	SACRAMENTO St ON-RAMP, RELAY FLUME DD	R16.65	3	1	3	0.7		
	BRIDGE MBGR	R16.74	3	1	3	0.7		
	COYOTE Rd OFF-RAMP	R17.35	15	1	7	1.6		
SUBTOTAL (WB)				17	125	28.6	3.0	81.0
SUBTOTAL (EB & WB)				35	243*	55.4*	5.5	148.5
TOTAL				35	-	-	5.5	148.5

DRAINAGE QUANTITIES
DQ-1

REVISED BY | DATE REVISED
JAMES PHILIPP
CALCULATED-DESIGNED BY | CHECKED BY
FUNCTIONAL SUPERVISOR
DENNIS JAGODA
STATE OF CALIFORNIA - DEPARTMENT OF TRANSPORTATION
Caltrans
HYDRAULICS BRANCH

LAST REVISION 00-00-00 | DATE PLOTTED => 30-AUG-2012 | TIME PLOTTED => 09:09

Dist	COUNTY	ROUTE	POST MILES TOTAL PROJECT	SHEET No.	TOTAL SHEETS
03	Nev	20	R4.1/R17.4	36	106

Joyce K Loftus 6-4-12
REGISTERED CIVIL ENGINEER DATE

6-4-12
PLANS APPROVAL DATE

REGISTERED PROFESSIONAL ENGINEER Joyce K. Loftus No. 38426 Exp. 3-31-13 CIVIL STATE OF CALIFORNIA

THE STATE OF CALIFORNIA OR ITS OFFICERS OR AGENTS SHALL NOT BE RESPONSIBLE FOR THE ACCURACY OR COMPLETENESS OF SCANNED COPIES OF THIS PLAN SHEET.

STATIONARY MOUNTED CONSTRUCTION AREA SIGNS

SIGN LETTER	SIGN CODE FEDERAL	SIGN CODE CALIFORNIA	PANEL SIZE	SIGN MESSAGE	NUMBER OF POST AND SIZE	NUMBER OF SIGNS
A	G20-1[Spec](2)		60" x 30"	ROAD WORK NEXT 2 MILES	2 - 4" x 6"	2
B	G20-1[Spec](4)		84" x 42"	ROAD WORK NEXT 4 MILES	2 - 4" x 6"	3
C	G20-1[Spec](3)		84" x 42"	ROAD WORK NEXT 3 MILES	2 - 4" x 6"	3
D		C40(Mod)	48" x 36"	TRAFFIC FINES DOUBLED IN WORK ZONES	1 - 4" x 6"	8
E	W20-1	C23	48" x 48"	ROAD WORK AHEAD	1 - 6" x 6"	23
F	G20-2	C14	36" x 18"	END ROAD WORK	1 - 4" x 4"	28

NOTES:

1. EXACT SIGN LOCATION TO BE DETERMINED BY THE ENGINEER.
2. FOR ADDITIONAL CONSTRUCTION AREA SIGNS, SEE STAGE CONSTRUCTION AND TRAFFIC HANDLING PLANS.

(D) C40(Mod)<CA>

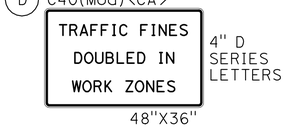

RETROREFLECTIVE WHITE BACKGROUND WITH BLACK LEGEND AND BORDERS.

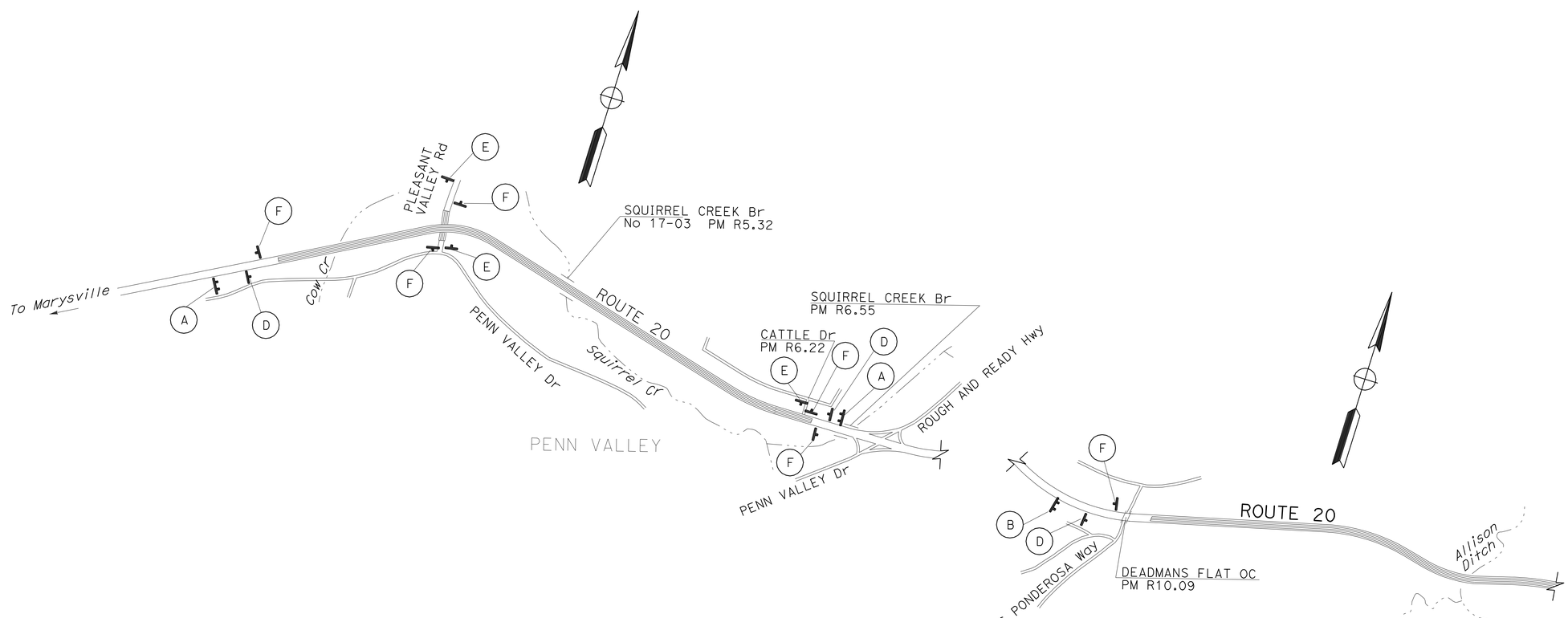

CONSTRUCTION AREA SIGNS

NO SCALE

CS-1

APPROVED FOR CONSTRUCTION AREA SIGN WORK ONLY

STATE OF CALIFORNIA - DEPARTMENT OF TRANSPORTATION
Caltrans
TRAFFIC

FUNCTIONAL SUPERVISOR: SERGIO ACEVES
CALCULATED-DESIGNED BY: JOYCE LOFTUS
CHECKED BY: X
REVISED BY
DATE REVISED

LAST REVISION 06-13-12
DATE PLOTTED => 30-AUG-2012
TIME PLOTTED => 09:09

Dist	COUNTY	ROUTE	POST MILES TOTAL PROJECT	SHEET No.	TOTAL SHEETS
03	Nev	20	R4.1/R17.4	37	106

Joyce K Loftus 6-4-12
REGISTERED CIVIL ENGINEER DATE

6-4-12
PLANS APPROVAL DATE

REGISTERED PROFESSIONAL ENGINEER
Joyce K. Loftus
No. 38426
Exp. 3-31-13
CIVIL
STATE OF CALIFORNIA

THE STATE OF CALIFORNIA OR ITS OFFICERS OR AGENTS SHALL NOT BE RESPONSIBLE FOR THE ACCURACY OR COMPLETENESS OF SCANNED COPIES OF THIS PLAN SHEET.

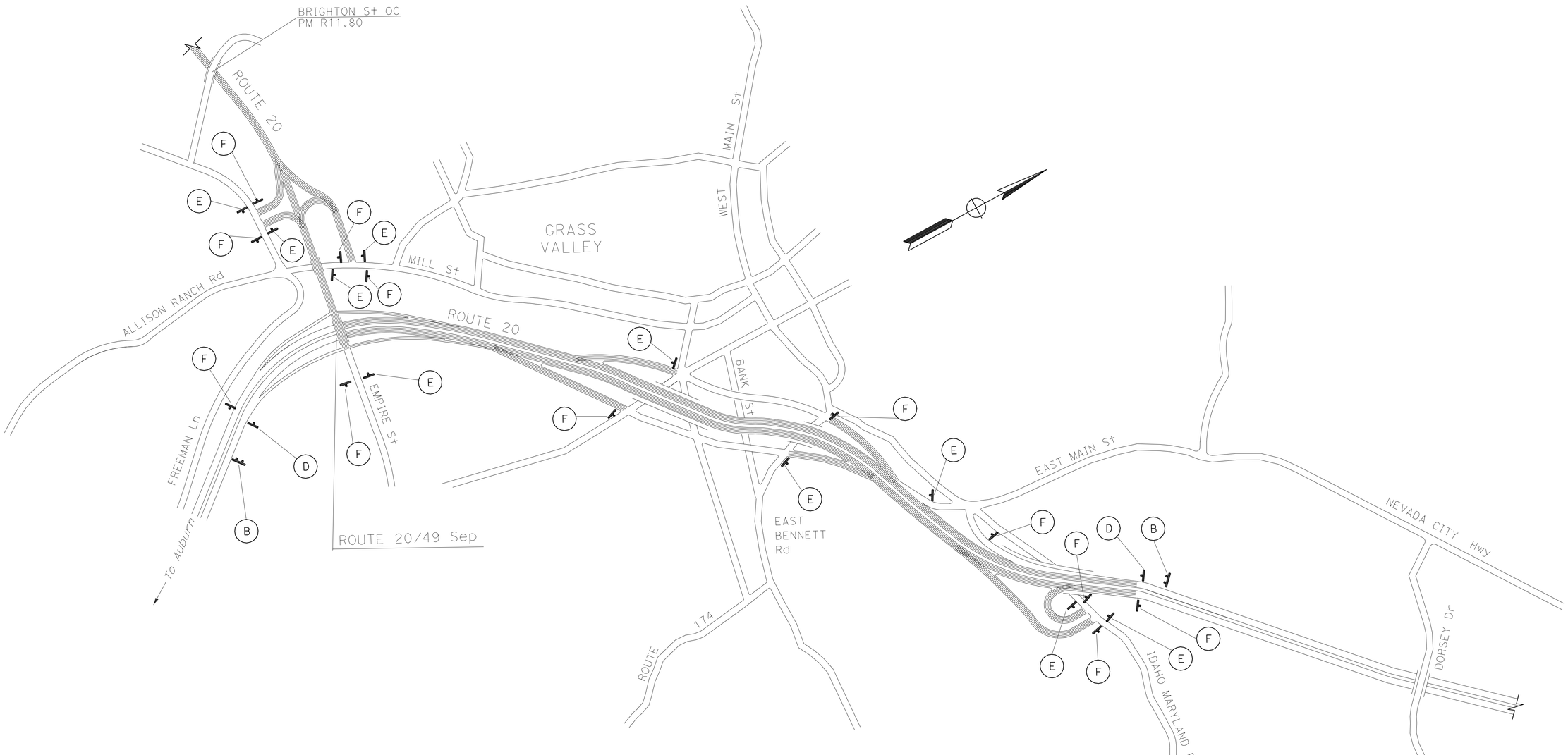

CONSTRUCTION AREA SIGNS

NO SCALE

CS-2

APPROVED FOR CONSTRUCTION AREA SIGN WORK ONLY

STATE OF CALIFORNIA - DEPARTMENT OF TRANSPORTATION
Caltrans
TRAFFIC

FUNCTIONAL SUPERVISOR: SERGIO ACEVES
CALCULATED-DESIGNED BY: JOYCE LOFTUS
CHECKED BY: X
REVISED BY
DATE REVISED

LAST REVISION 06-13-12
DATE PLOTTED => 30-AUG-2012
TIME PLOTTED => 09:09

Dist	COUNTY	ROUTE	POST MILES TOTAL PROJECT	SHEET No.	TOTAL SHEETS
03	Nev	20	R4.1/R17.4	38	106

Joyce K Loftus 6-4-12
REGISTERED CIVIL ENGINEER DATE

6-4-12
PLANS APPROVAL DATE

REGISTERED PROFESSIONAL ENGINEER
Joyce K. Loftus
No. 38426
Exp. 3-31-13
CIVIL
STATE OF CALIFORNIA

THE STATE OF CALIFORNIA OR ITS OFFICERS OR AGENTS SHALL NOT BE RESPONSIBLE FOR THE ACCURACY OR COMPLETENESS OF SCANNED COPIES OF THIS PLAN SHEET.

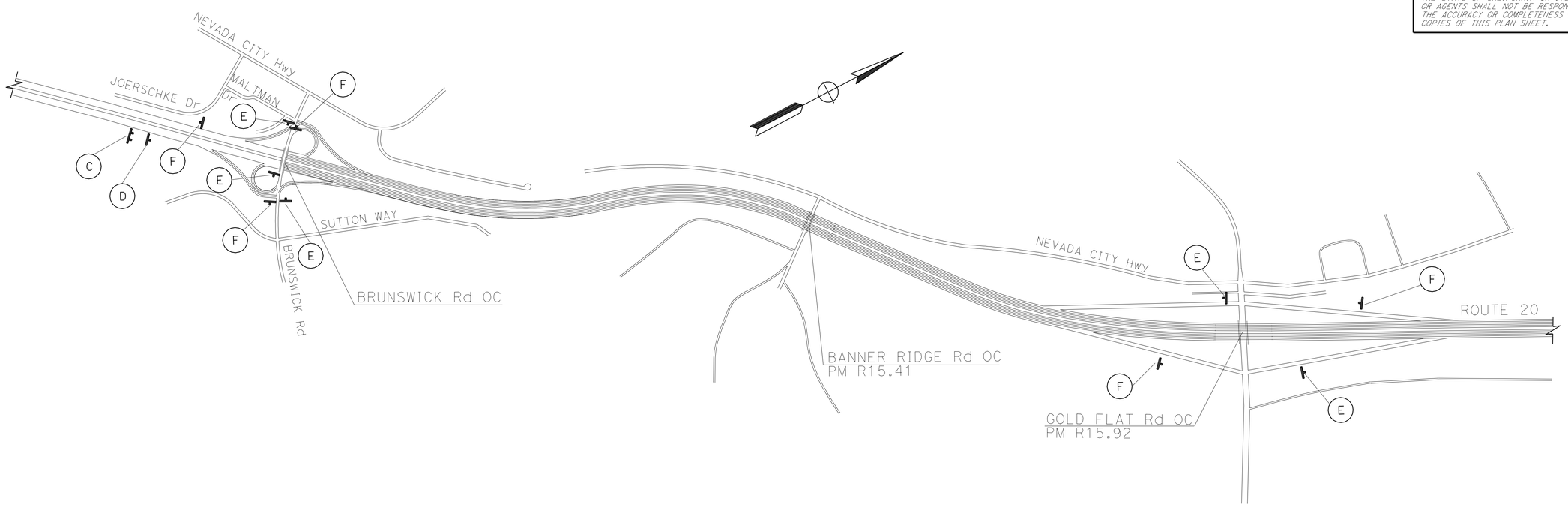

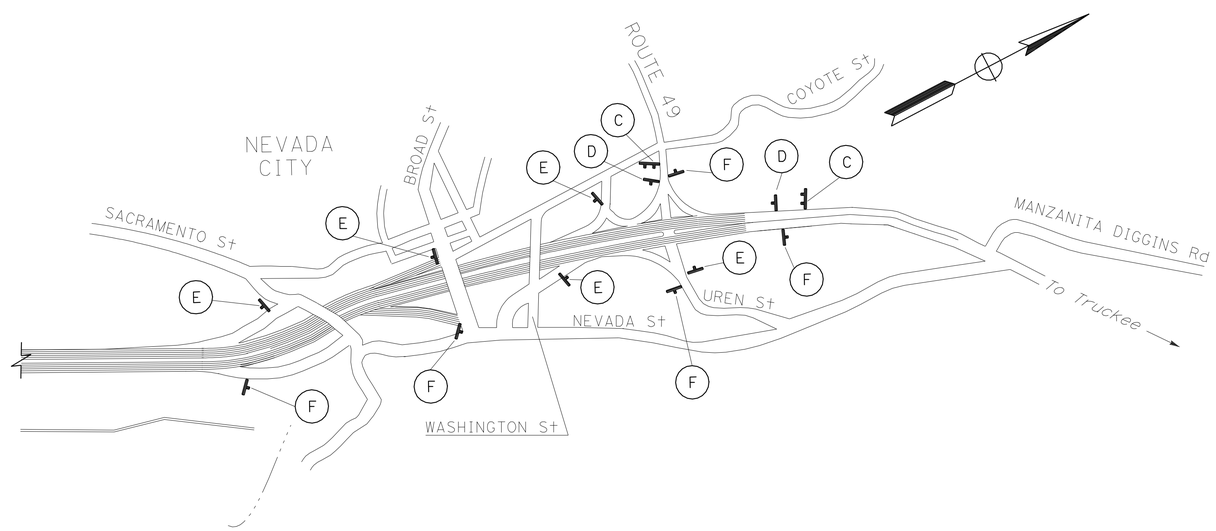

CONSTRUCTION AREA SIGNS

NO SCALE

APPROVED FOR CONSTRUCTION AREA SIGN WORK ONLY

CS-3

STATE OF CALIFORNIA - DEPARTMENT OF TRANSPORTATION
Caltrans
TRAFFIC

FUNCTIONAL SUPERVISOR: SERGIO ACEVES
CALCULATED-DESIGNED BY: JOYCE LOFTUS
CHECKED BY: X
REVISED BY
DATE REVISED

LAST REVISION 06-13-12 | DATE PLOTTED => 30-AUG-2012 | TIME PLOTTED => 09:09

Dist	COUNTY	ROUTE	POST MILES TOTAL PROJECT	SHEET No.	TOTAL SHEETS
03	Nev	20	R4.1/R17.4	39	106

Joyce K Loftus 6-4-12
REGISTERED CIVIL ENGINEER DATE

6-4-12
PLANS APPROVAL DATE

REGISTERED PROFESSIONAL ENGINEER
Joyce K. Loftus
No. 38426
Exp. 3-31-13
CIVIL
STATE OF CALIFORNIA

THE STATE OF CALIFORNIA OR ITS OFFICERS OR AGENTS SHALL NOT BE RESPONSIBLE FOR THE ACCURACY OR COMPLETENESS OF SCANNED COPIES OF THIS PLAN SHEET.

NOTE:

1. POST MILE LOCATIONS ARE APPROXIMATE.

THERMOPLASTIC TRAFFIC STRIPE (ENHANCED WET NIGHT VISIBILITY

LOCATION	4" THERMOPLASTIC TRAFFIC STRIPE						4" THERMOPLASTIC TRAFFIC STRIPE (BROKEN 36-12)				4" THERMOPLASTIC TRAFFIC STRIPE (BROKEN 12-3)	4" THERMOPLASTIC TRAFFIC STRIPE (BROKEN 17-7)	8" THERMOPLASTIC TRAFFIC STRIPE			8" THERMOPLASTIC TRAFFIC STRIPE (BROKEN 12-3)
	DETAIL NUMBER						DETAIL NUMBER				DETAIL NUMBER	DETAIL NUMBER	DETAIL NUMBER			DETAIL NUMBER
	19	22	25	25A	27B	29	6	12	14A	19	27C	9	36	36A	38	37
	LF	LF	LF	LF	LF	LF	LF	LF	LF	LF	LF	LF	LF	LF	LF	LF
PM R4.10 TO PM R6.30	837	2,308			5,615		1,277			837					431	
PM R10.20 TO PM R13.63	6,587	27,328	13,756		55,049	3,756	2,247	22,216	1,152	6,587	317	395	3,526	1,592	1,136	3,621
PM 14.80 TO PM 17.40			27,950		30,214			25,534	1,008			1,850	4,014	2,387	727	884
EB EXIT RAMP AT McCOURTNEY				629	629							148			349	
EB ENTRANCE RAMP AT McCOURTNEY				260	260											
WB ENTRANCE RAMP AT MILL St				855	855											
WB EXIT RAMP AT MILL St				694	694										202	
EB EXIT TO SB 49				832	832											
WB 20/49 TO WB 20				701	701										213	
EB 20 TO EB 20/49				749	749										252	
WB ENTRANCE RAMP AT S AUBURN St				656	656											
EB EXIT RAMP AT S AUBURN St				523	523										217	
EB ENTRANCE RAMP AT BENNETT St				475	475											
WB EXIT RAMP AT BENNETT St				608	608							121				
EB EXIT RAMP TO IDAHO MARYLAND Rd				831	831										346	
EB ENTRANCE LOOP AT IDAHO MARYLAND Rd				500	500											
EB SLIP ENTRANCE RAMP AT BRUNSWICK Rd				359	485								126			
WB ENTRANCE LOOP RAMP AT BRUNSWICK Rd				568	621								53			
WB ENTRANCE RAMP AT BRUNSWICK Rd				351	487								136			
EB EXIT RAMP AT BROAD St				603	603											
WB ENTRANCE RAMP AT BROAD St				503	503											
SHEET TOTAL	7,424	29,636	41,706	10,697	101,890	3,756	3,524	47,750	2,160	7,424	317	2,514	7,855	3,979	3,873	4,505
SUBTOTAL	195,109						60,858				317	2,514	15,707			4,505
TOTAL	27,9010															

APPROVED FOR PAVEMENT DELINEATION WORK ONLY

PAVEMENT DELINEATION QUANTITIES

PDQ-1

STATE OF CALIFORNIA - DEPARTMENT OF TRANSPORTATION
Caltrans
TRAFFIC

FUNCTIONAL SUPERVISOR: ARSHAD IQBAL
CALCULATED-DESIGNED BY: JOYCE LOFTUS
CHECKED BY: CHUCK COOK
REVISED BY
DATE REVISED

LAST REVISION 06-21-12
DATE PLOTTED => 30-AUG-2012
TIME PLOTTED => 09:09

Dist	COUNTY	ROUTE	POST MILES TOTAL PROJECT	SHEET No.	TOTAL SHEETS
03	Nev	20	R4.1/R17.4	40	106

Joyce K Loftus 6-4-12
REGISTERED CIVIL ENGINEER DATE

6-4-12
PLANS APPROVAL DATE

REGISTERED PROFESSIONAL ENGINEER
Joyce K. Loftus
No. 38426
Exp. 3-31-13
CIVIL
STATE OF CALIFORNIA

THE STATE OF CALIFORNIA OR ITS OFFICERS OR AGENTS SHALL NOT BE RESPONSIBLE FOR THE ACCURACY OR COMPLETENESS OF SCANNED COPIES OF THIS PLAN SHEET.

NOTE:

1. POST MILE LOCATIONS ARE APPROXIMATE.

THERMOPLASTIC PAVEMENT MARKING (ENHANCED WET NIGHT VISIBILITY)

LOCATION	TYPE I (24') ARROW	TYPE II ARROW	TYPE III ARROW	TYPE V ARROW	TYPE VI ARROW	"STOP"	"SIGNAL"	"AHEAD"	CROSSWALK	LIMIT LINE	12" CHEVRON (WHITE)
	SQFT										
PM R4.10 TO PM R6.30		45	588			44	64	62		195	
PM R10.20 TO PM R13.63				132	336						
20/49 INTERSECTION	31	45	168						85		
EB EXIT RAMP TO McCOURTNEY			168	33		66		31		53	
EB ENTRANCE RAMP FROM McCOURTNEY	31										
WB ENTRANCE RAMP FROM MILL St	93										
WB EXIT RAMP TO MILL St			168	33		22		31		39	
EB EXIT TO SB 49	31		42								
WB 20/49 TO WB 20			168	33			32	31	144		
EB 20 TO EB 20/49	62								120		
WB ENTRANCE RAMP FROM S AUBURN St	31								88		
EB EXIT RAMP TO S AUBURN St		90	84	33		66		31	146		51
EB ENTRANCE RAMP FROM BENNETT St	31								110		
WB EXIT RAMP TO BENNETT St		90		33		66		31	108		
EB EXIT RAMP TO IDAHO MARYLAND Rd			252	66		66		31	98		
EB ENTRANCE LOOP FROM IDAHO MARYLAND Rd	31								101		
EB SLIP ENTRANCE RAMP FROM BRUNSWICK Rd	31		168	33			32	31	110		
WB LOOP ENTRANCE RAMP FROM BRUNSWICK Rd	31										
WB EXIT RAMP TO BRUNSWICK Rd	62		252	33			32	31		75	
EB EXIT RAMP TO BROAD St			84	66		66		31	90		
WB ENTRANCE RAMP AT BROAD St	31										
COYOTE St/ UREN St			168	165	84	88		31		86	110
SUBTOTAL	496	270	2,310	660	420	484	160	372	1,200	448	161
TOTAL	6,981										

APPROVED FOR PAVEMENT DELINEATION WORK ONLY

PAVEMENT DELINEATION QUANTITIES

PDQ-2

STATE OF CALIFORNIA - DEPARTMENT OF TRANSPORTATION
Caltrans
TRAFFIC

FUNCTIONAL SUPERVISOR: ARSHAD IQBAL
CALCULATED-DESIGNED BY: JOYCE LOFTUS
CHECKED BY: X
REVISED BY
DATE REVISED

LAST REVISION 06-21-12
DATE PLOTTED => 30-AUG-2012
TIME PLOTTED => 09:09

Dist	COUNTY	ROUTE	POST MILES TOTAL PROJECT	SHEET No.	TOTAL SHEETS
03	Nev	20	R4.1/R17.4	41	106

Joyce K. Loftus 6-4-12
REGISTERED CIVIL ENGINEER DATE

6-4-12
PLANS APPROVAL DATE

REGISTERED PROFESSIONAL ENGINEER
Joyce K. Loftus
No. 38426
Exp. 3-31-13
CIVIL
STATE OF CALIFORNIA

THE STATE OF CALIFORNIA OR ITS OFFICERS OR AGENTS SHALL NOT BE RESPONSIBLE FOR THE ACCURACY OR COMPLETENESS OF SCANNED COPIES OF THIS PLAN SHEET.

PAVEMENT MARKER (RETROREFLECTIVE-RECESSED)

DETAIL	TYPE C (EA)	TYPE D (EA)	TYPE G (EA)	TYPE H (EA)
6		74		
9			57	
12			997	
14A	60			
19		310		156
22		1,237		
25				870
25A				448
29		79		
36			329	
36A			168	
37	32		272	
38			163	
SUBTOTAL	92	1,700	1,986	1,474
TOTAL	5,252			

PAVEMENT MARKER (RETROREFLECTIVE)

DETAIL	TYPE D (EA)	TYPE G (EA)	TYPE H (EA)
6	28		
19	86		18
22	194		
38		19	
SUBTOTAL	308	19	18
TOTAL	345		

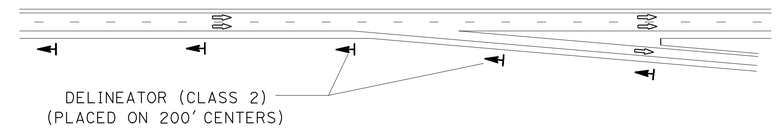

TYPICAL DELINEATOR PLACEMENT ON FREEWAY EXIT RAMPS
NO SCALE

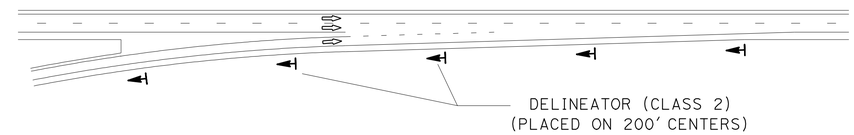

TYPICAL DELINEATOR PLACEMENT ON FREEWAY ENTRANCE RAMPS
NO SCALE

DELINEATOR - OBJECT MARKER

DESCRIPTION	DELINEATOR (CLASS 2)		OBJECT MARKER TYPE K-2 (EACH)
	TYPE F (EACH)	TYPE G (EACH)	
EB EXIT RAMP AT McCOURTNEY	5	7	
EB ENTRANCE RAMP AT McCOURTNEY	3	6	
WB ENTRANCE RAMP AT MILL St	12	5	
WB EXIT RAMP AT MILL St	3	10	
EB EXIT TO SB 49	9		
WB 20/49 TO WB 20	7		2
EB 20 TO EB 20/49	5	6	
WB ENTRANCE RAMP AT S AUBURN St	12		
EB EXIT RAMP AT S AUBURN St	4	4	
EB ENTRANCE RAMP AT BENNETT St	5	5	
WB EXIT RAMP AT BENNETT St	14		
EB EXIT RAMP TO IDAHO MARYLAND Rd	5	5	
EB ENTRANCE LOOP AT IDAHO MARYLAND Rd	5	13	
EB SLIP ENTRANCE RAMP AT BRUSWICK Rd	5	5	
WB ENTRANCE LOOP RAMP AT BRUNSWICK Rd	4	20	
WB ENTRANCE RAMP AT BRUSWICK Rd	11	9	
EB EXIT RAMP AT BROAD St	5		
WB ENTRANCE RAMP AT BROAD St	5		
SUBTOTAL	119	95	2
TOTAL	214		2

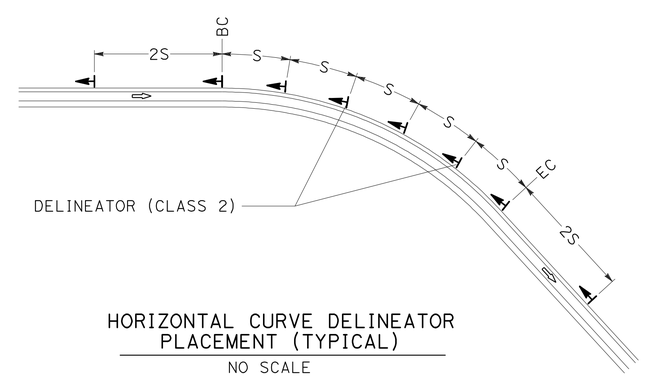

HORIZONTAL CURVE DELINEATOR PLACEMENT (TYPICAL)
NO SCALE

LEGEND

S DELINEATOR SPACING (TO BE PROVIDED BY THE ENGINEER)

⇨ DIRECTION OF TRAVEL

NOTE:

1. EXACT LOCATION OF DELINEATORS AND OBJECT MARKERS TO BE DETERMINED BY THE ENGINEER.

PAVEMENT DELINEATION QUANTITIES

PDQ-3

STATE OF CALIFORNIA - DEPARTMENT OF TRANSPORTATION
TRAFFIC
FUNCTIONAL SUPERVISOR: ARSHAD IQBAL
CALCULATED-DESIGNED BY: CHUCK COOK
CHECKED BY: JOYCE LOFTUS
REVISED BY
DATE REVISED

LAST REVISION 06-21-12 | DATE PLOTTED => 30-AUG-2012 | TIME PLOTTED => 09:09

Dist	COUNTY	ROUTE	POST MILES TOTAL PROJECT	SHEET No.	TOTAL SHEETS
03	Nev	20	R4.1/R17.4	42	106

Joyce K Loftus 6-4-12
REGISTERED CIVIL ENGINEER DATE

6-4-12
PLANS APPROVAL DATE

REGISTERED PROFESSIONAL ENGINEER
Joyce K. Loftus
No. 38426
Exp. 3-31-13
CIVIL
STATE OF CALIFORNIA

THE STATE OF CALIFORNIA OR ITS OFFICERS OR AGENTS SHALL NOT BE RESPONSIBLE FOR THE ACCURACY OR COMPLETENESS OF SCANNED COPIES OF THIS PLAN SHEET.

LEGEND:

(Sht-No.)	ROADSIDE SIGN NUMBER
<CA>	CALIFORNIA SIGN CODE
	SIGN - SINGLE POST
	SIGN - TWO POST
	SIGN - SSBM
■	REMOVE ROADSIDE SIGN

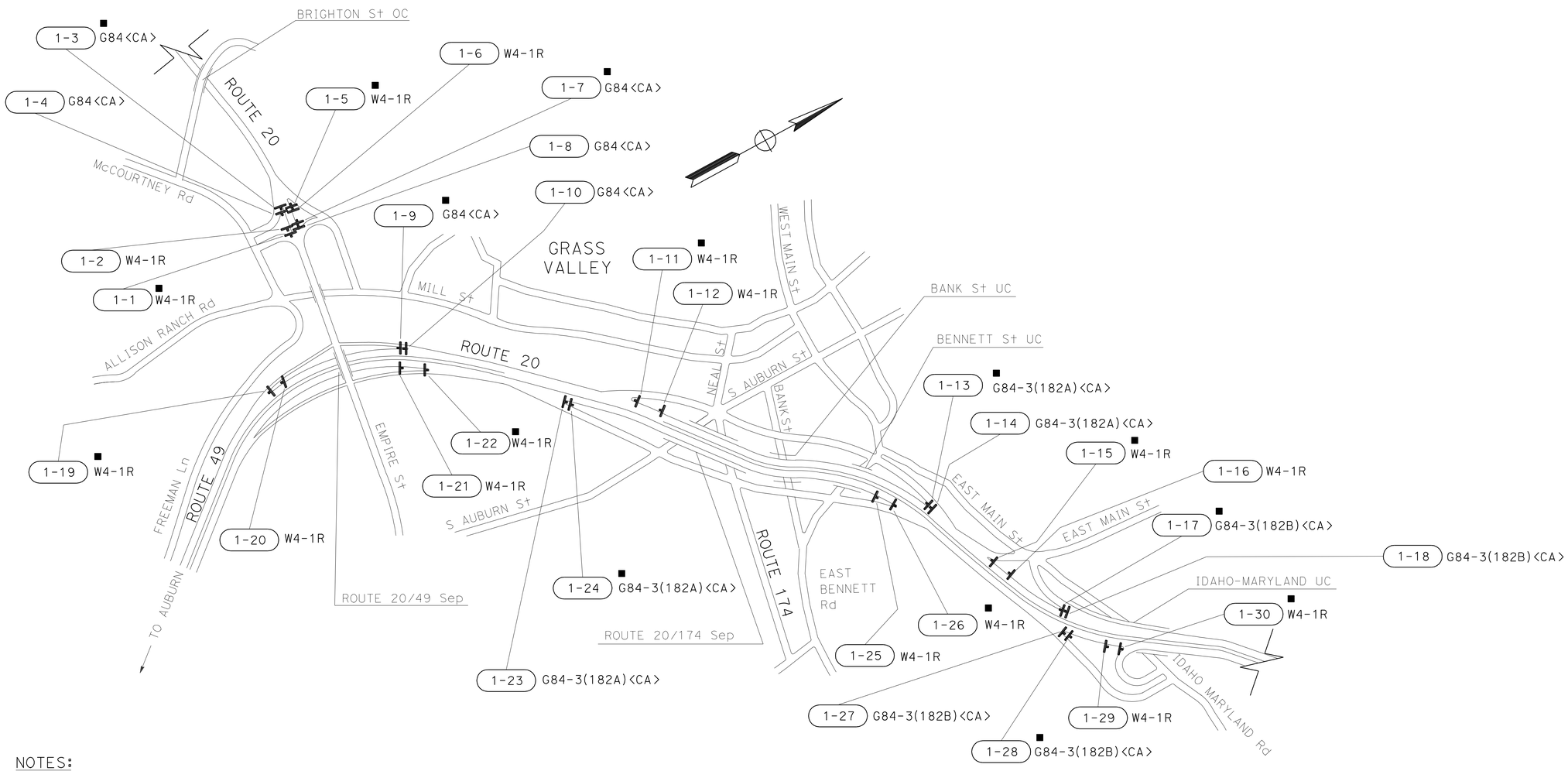

NOTES:

1. ALL EXISTING SIGNS NOT SHOWN FOR REMOVAL SHALL REMAIN IN PLACE.
2. ALL SIGN CODES SHOWN ARE FEDERAL SIGN CODES UNLESS OTHERWISE DESIGNATED AS CALIFORNIA SIGN CODES.
3. SEE SIGN DETAIL PLAN SHEET SD-3 FOR PLACEMENT OF RAMP SIGNAGE.

SIGN DETAIL

NO SCALE

SD-1

APPROVED FOR SIGN WORK ONLY

STATE OF CALIFORNIA - DEPARTMENT OF TRANSPORTATION
Caltrans
TRAFFIC

FUNCTIONAL SUPERVISOR: ARSHAD IQBAL
CALCULATED-DESIGNED BY: JOYCE LOFTUS
CHECKED BY: CHUCK COOK
REVISED BY
DATE REVISED

LAST REVISION 06-13-12
DATE PLOTTED => 30-AUG-2012
TIME PLOTTED => 09:09

Dist	COUNTY	ROUTE	POST MILES TOTAL PROJECT	SHEET No.	TOTAL SHEETS
03	Nev	20	R4.1/R17.4	43	106

Joyce K Loftus 6-4-12
REGISTERED CIVIL ENGINEER DATE

6-4-12
PLANS APPROVAL DATE

REGISTERED PROFESSIONAL ENGINEER
Joyce K. Loftus
No. 38426
Exp. 3-31-13
CIVIL
STATE OF CALIFORNIA

THE STATE OF CALIFORNIA OR ITS OFFICERS OR AGENTS SHALL NOT BE RESPONSIBLE FOR THE ACCURACY OR COMPLETENESS OF SCANNED COPIES OF THIS PLAN SHEET.

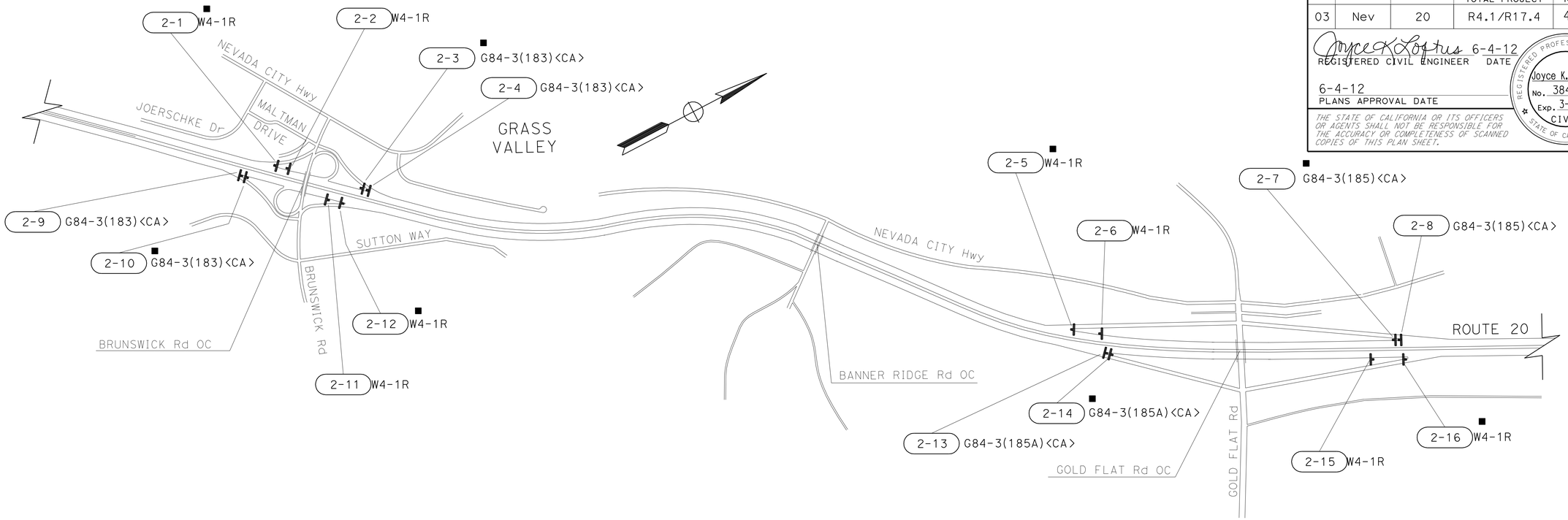

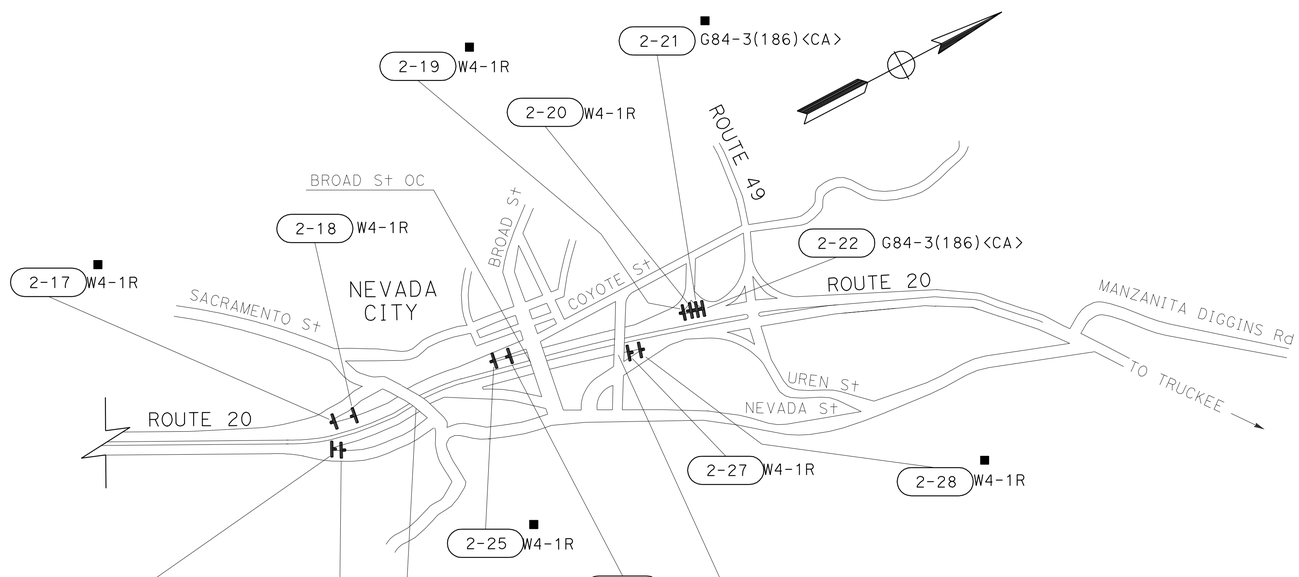

SIGN DETAIL

NO SCALE

SD-2

REVISED BY	DATE REVISED
CHUCK COOK	JOYCE LOFTUS
CALCULATED-DESIGNED BY	CHECKED BY
FUNCTIONAL SUPERVISOR	ARSHAD IQBAL

STATE OF CALIFORNIA - DEPARTMENT OF TRANSPORTATION

Caltrans®

TRAFFIC

LAST REVISION 06-13-12 | DATE PLOTTED => 30-AUG-2012 | TIME PLOTTED => 09:09

Dist	COUNTY	ROUTE	POST MILES TOTAL PROJECT	SHEET No.	TOTAL SHEETS
03	Nev	20	R4.1/R17.4	44	106

Joyce K Loftus 6-4-12
REGISTERED CIVIL ENGINEER DATE

6-4-12
PLANS APPROVAL DATE

REGISTERED PROFESSIONAL ENGINEER
Joyce K. Loftus
No. 38426
Exp. 3-31-13
CIVIL
STATE OF CALIFORNIA

THE STATE OF CALIFORNIA OR ITS OFFICERS OR AGENTS SHALL NOT BE RESPONSIBLE FOR THE ACCURACY OR COMPLETENESS OF SCANNED COPIES OF THIS PLAN SHEET.

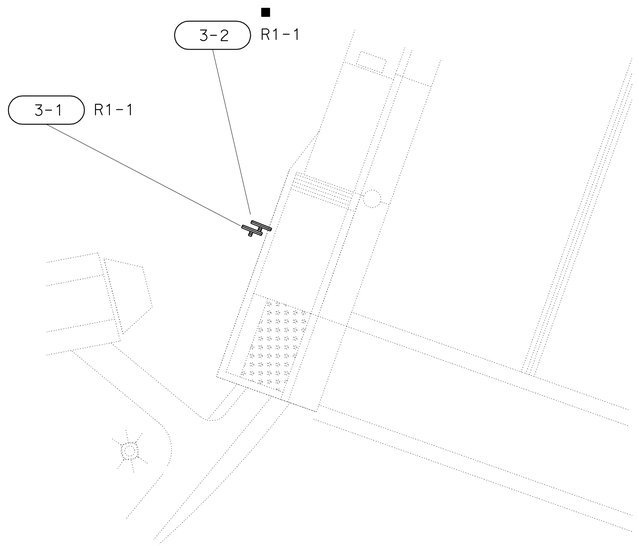

LOCATION 1
MILL St

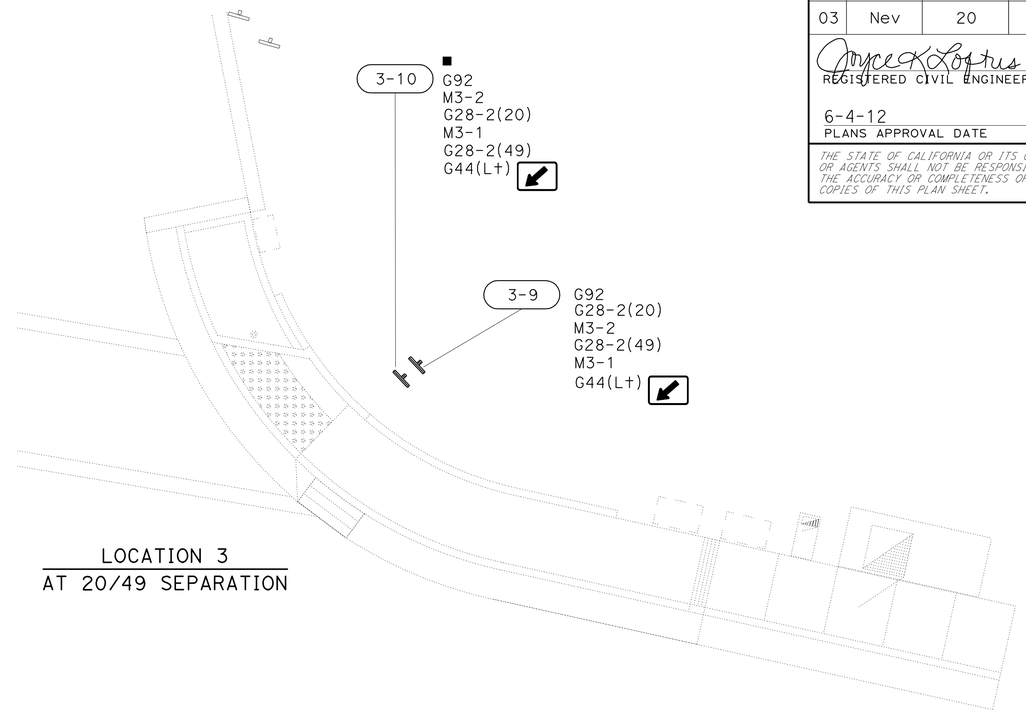

LOCATION 3
AT 20/49 SEPARATION

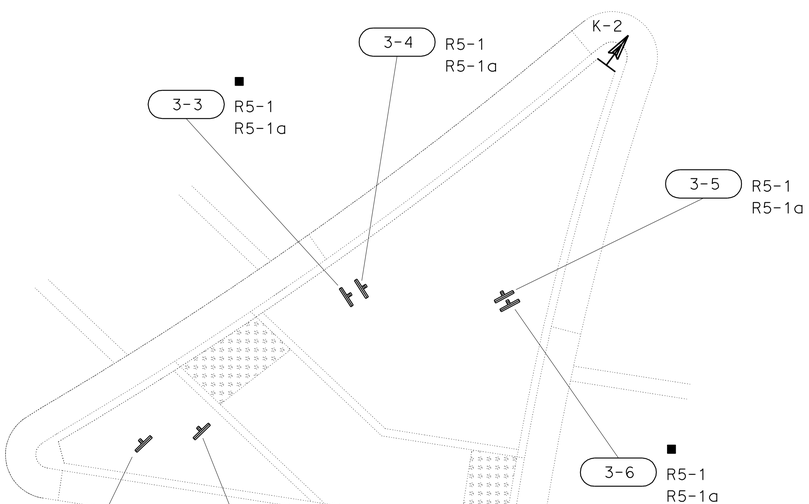

LOCATION 2
AT 20/49 SEPARATION

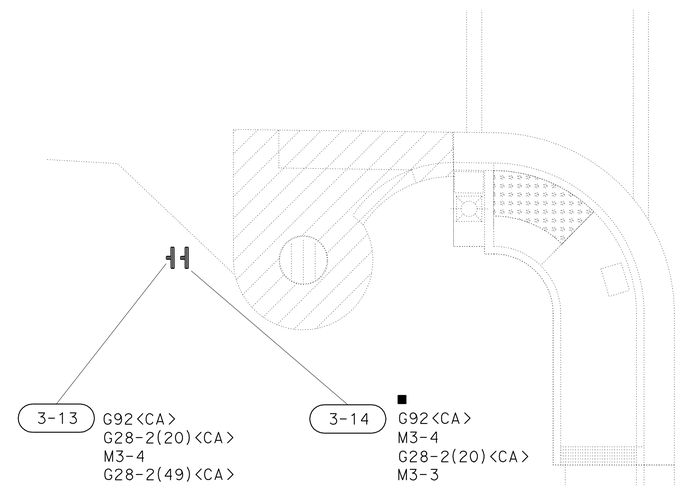

LOCATION 5
S. AUBURN St

NOTE:

SEE CONSTRUCTION DETAIL SHEETS FOR additional information.

APPROVED FOR SIGN WORK ONLY

SIGN DETAIL

NO SCALE

SD-3

STATE OF CALIFORNIA - DEPARTMENT OF TRANSPORTATION
Caltrans
TRAFFIC

FUNCTIONAL SUPERVISOR: ARSHAD IQBAL
CALCULATED-DESIGNED BY: CHUCK COOK
CHECKED BY: JOYCE LOFTUS
REVISED BY
DATE REVISED

LAST REVISION 06-13-12
DATE PLOTTED => 30-AUG-2012
TIME PLOTTED => 09:09

Dist	COUNTY	ROUTE	POST MILES TOTAL PROJECT	SHEET No.	TOTAL SHEETS
03	Nev	20	R4.1/R17.4	45	106

Joyce K Loftus 6-4-12
REGISTERED CIVIL ENGINEER DATE

6-4-12
PLANS APPROVAL DATE

REGISTERED PROFESSIONAL ENGINEER
Joyce K. Loftus
No. 38426
Exp. 3-31-13
CIVIL
STATE OF CALIFORNIA

THE STATE OF CALIFORNIA OR ITS OFFICERS OR AGENTS SHALL NOT BE RESPONSIBLE FOR THE ACCURACY OR COMPLETENESS OF SCANNED COPIES OF THIS PLAN SHEET.

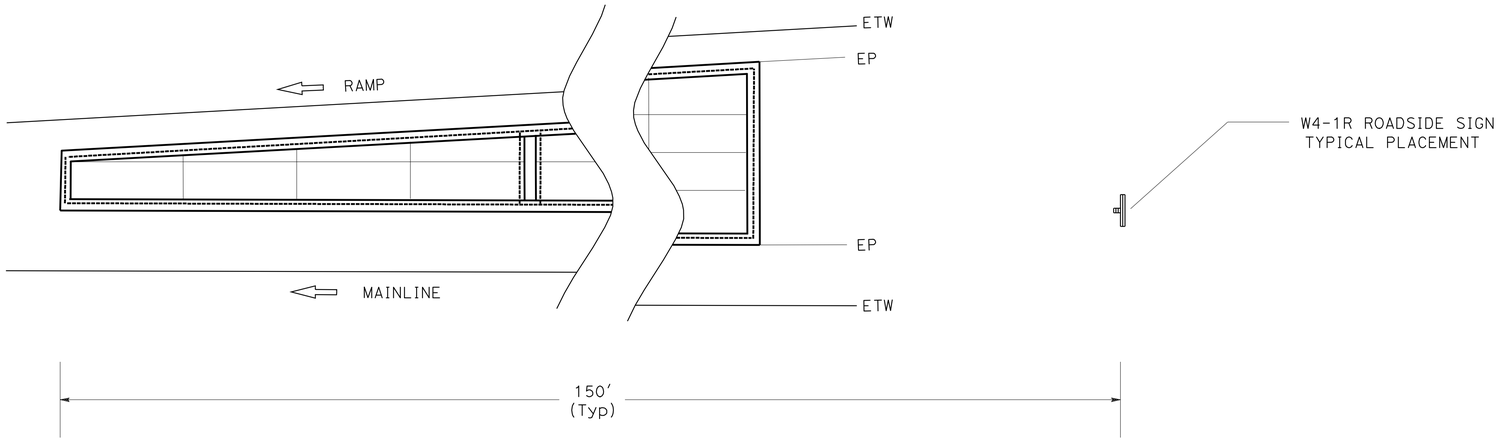

ROADSIDE SIGN PLACEMENT DETAIL
(ENTRANCE RAMP)

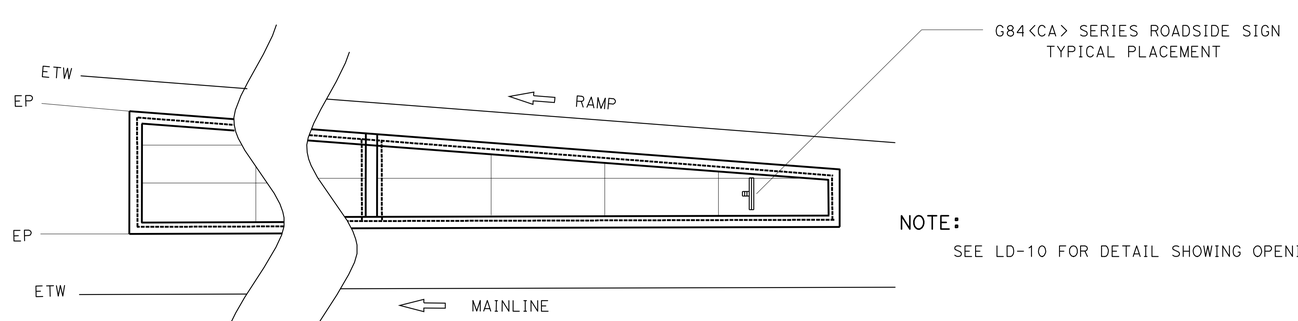

NOTE:
SEE LD-10 FOR DETAIL SHOWING OPENING FOR SIGN POST MINOR CONCRETE.

ROADSIDE SIGN PLACEMENT DETAIL
(EXIT RAMP)

SIGN DETAIL
NO SCALE

SD-4

APPROVED FOR SIGN WORK ONLY

STATE OF CALIFORNIA - DEPARTMENT OF TRANSPORTATION
Caltrans
TRAFFIC

FUNCTIONAL SUPERVISOR: ARSHAD IQBAL
CALCULATED-DESIGNED BY: CHUCK COOK
CHECKED BY: JOYCE LOFTUS
REVISED BY
DATE REVISED

LAST REVISION 06-13-12
DATE PLOTTED => 30-AUG-2012
TIME PLOTTED => 09:09

Dist	COUNTY	ROUTE	POST MILES TOTAL PROJECT	SHEET No.	TOTAL SHEETS
03	Nev	20	R4.1/R17.4	46	106

Joyce K. Loftus 6-4-12
REGISTERED CIVIL ENGINEER DATE

6-4-12
PLANS APPROVAL DATE

REGISTERED PROFESSIONAL ENGINEER Joyce K. Loftus No. 38426 Exp. 3-31-13 CIVIL STATE OF CALIFORNIA

THE STATE OF CALIFORNIA OR ITS OFFICERS OR AGENTS SHALL NOT BE RESPONSIBLE FOR THE ACCURACY OR COMPLETENESS OF SCANNED COPIES OF THIS PLAN SHEET.

NOTES:

1. THE SIGN POST SHALL HAVE 7/16" DIAMETER PERFORATIONS 1" ON CENTER ON ALL FOUR SIDES FOR THE FULL LENGTH.
2. USE TWO DRIVE RIVETS TO FASTEN ASSEMBLED SIGN AND SIGN POST INTO ANCHOR SLEEVE. INSTALL DRIVE RIVETS INTO THE SIDES FACING TRAFFIC.
3. ALL METAL SIGN POSTS AND ANCHOR SLEEVES SHALL BE GALVANIZED.
4. ALL ANCHOR SLEEVES SHALL BE EMBEDDED IN PCC.
5. BALANCED SINGLE POST INSTALLATIONS OF SINGLE SHEET ALUMINUM PANEL SIGNS REQUIRE BACK BRACES WHEN 2'-10" OR MORE IN LENGTH.
6. WOOD BLOCK SPACERS ARE NOT REQUIRED FOR SIGNS MOUNTED ON METAL POSTS.
7. ATTACH RECTANGULAR SIGN PANEL TO SIGN POST WITH BOLTS AT TOP AND BOTTOM. CENTER MAY BE ATTACHED WITH EITHER BOLT OR 3/8" DRIVE RIVET.
8. ATTACH DIAMOND SIGN PANEL TO SIGN POST WITH BOLT AT CENTER. TOP AND BOTTOM MAY BE ATTACHED WITH EITHER BOLTS OR 3/8" DRIVE RIVETS.
9. FOR DETAILS NOT SHOWN, SEE STANDARD PLANS RS1 AND RS2.

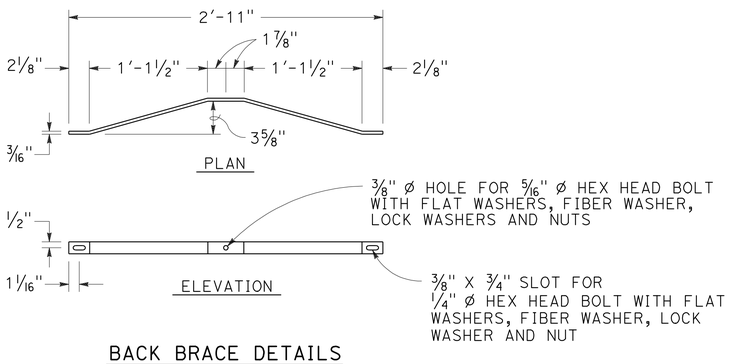

BACK BRACE DETAILS
SEE NOTE 5

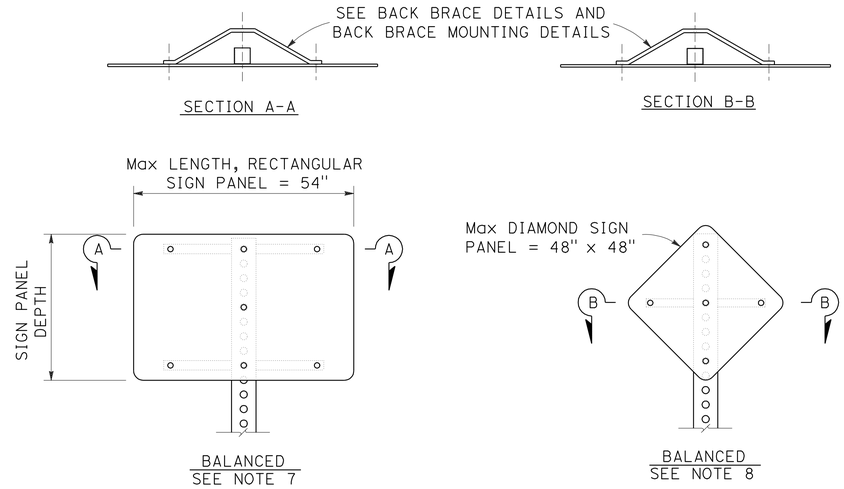

SINGLE POST INSTALLATION

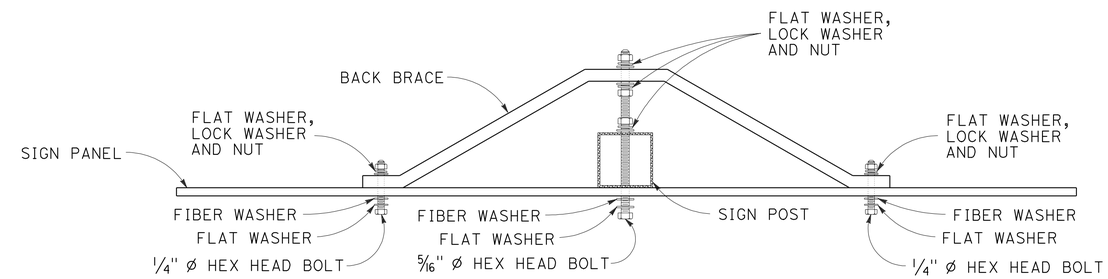

BACK BRACE MOUNTING DETAIL
SEE NOTES 6, 7 AND 8

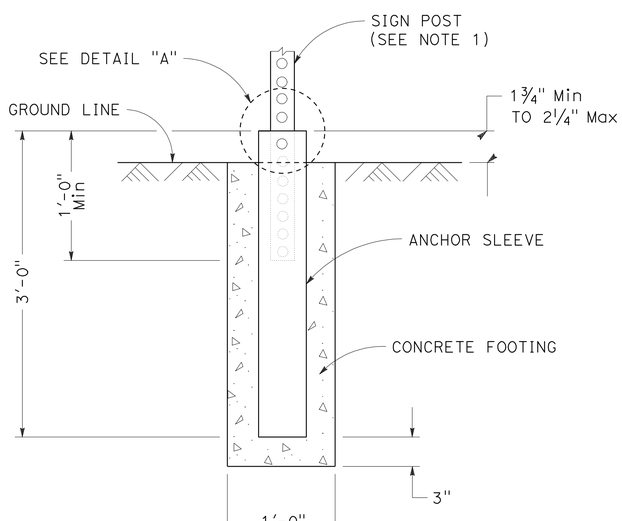

ANCHOR SLEEVE DETAIL

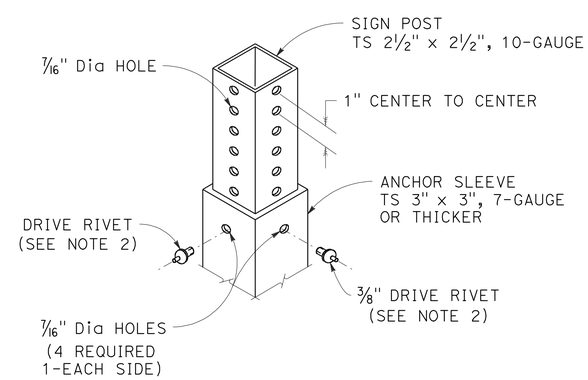

DETAIL "A"

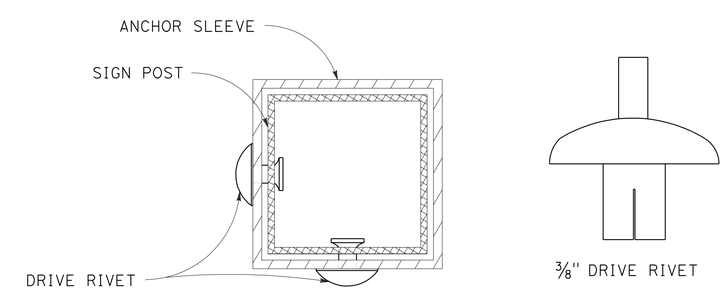

FASTENER DETAILS

SIGN DETAILS

NO SCALE

SD-5

STATE OF CALIFORNIA - DEPARTMENT OF TRANSPORTATION
TRAFFIC
Caltrans

FUNCTIONAL SUPERVISOR: ARSHAD IQBAL
CALCULATED-DESIGNED BY: JACK KEMMERLY
CHECKED BY: JOHN KEBER
REVISED BY
DATE REVISED

LAST REVISION
DATE PLOTTED => 30-AUG-2012
TIME PLOTTED => 09:09

Dist	COUNTY	ROUTE	POST MILES TOTAL PROJECT	SHEET No.	TOTAL SHEETS
03	Nev	20	R4.1/R17.4	47	106

Joyce K Loftus 6-4-12
REGISTERED CIVIL ENGINEER DATE

6-4-12
PLANS APPROVAL DATE

REGISTERED PROFESSIONAL ENGINEER
Joyce K. Loftus
No. 38426
Exp. 3-31-13
CIVIL
STATE OF CALIFORNIA

THE STATE OF CALIFORNIA OR ITS OFFICERS OR AGENTS SHALL NOT BE RESPONSIBLE FOR THE ACCURACY OR COMPLETENESS OF SCANNED COPIES OF THIS PLAN SHEET.

ROADSIDE SIGN QUANTITIES

SIGN NUMBER (SHT-NO.)	SIGN CODE		PANEL SIZE	"C" DIM IN FEET	POST SIZE AND LENGTH	ROADSIDE SIGN	REMOVE ROADSIDE SIGN	REMARKS
					METAL POST	ONE POST		
	FEDERAL	CALIFORNIA	INCHES		2½"x2½"	EA	EA	
1-1	W4-1R						1	
1-2	W4-1R		48 x 48	7	14′	1		
1-3		G84					1	
1-4		G84	54 x 48	7	12′	1		
1-5	W4-1R						1	
1-6	W4-1R		48 x 48	7	14′	1		
1-7		G84					1	
1-8		G84	54 x 48	7	12′	1		
1-9		G84					1	
1-10		G84	54 x 48	7	12′	1		
1-11	W4-1R						1	
1-12	W4-1R		48 x 48	7	14′	1		
1-13		G84-3(182A)					1	
1-14		G84-3(182A)	48 x 60	7	14′	1		
1-15	W4-1R						1	
1-16	W4-1R		48 x 48	7	14′	1		
1-17		G84-3(182B)					1	
1-18		G84-3(182B)	48 x 60	7	14′	1		
1-19	W4-1R						1	
1-20	W4-1R		48 x 48	7	14′	1		
1-21	W4-1R		48 x 48	7	14′	1		
1-22	W4-1R						1	
1-23		G84-3(182A)	48 x 60	7	14′	1		
1-24		G84-3(182A)					1	
1-25	W4-1R		48 x 48	7	14′	1		
1-26	W4-1R						1	
1-27		G84-3(182B)	48 x 60	7	14′	1		
1-28		G84-3(182B)					1	
1-29	W4-1R		48 x 48	7	14′	1		
1-30	W4-1R						1	
SHEET TOTAL						15	15	

NOTES:

1. EXACT LOCATION AND POSITION OF ROADSIDE SIGNS TO BE DETERMINED BY THE ENGINEER.
2. POST LENGTHS GIVEN ARE APPROXIMATE.
2. "C" DIM = VERTICAL CLEARANCE EP TO BOTTOM OF SIGN PANEL.

SIGN QUANTITIES

SQ-1

REVISED BY | DATE REVISED
CHUCK COOK | JOYCE LOFTUS
CALCULATED-DESIGNED BY | CHECKED BY
FUNCTIONAL SUPERVISOR
ARSHAD IQBAL
STATE OF CALIFORNIA - DEPARTMENT OF TRANSPORTATION
Caltrans
TRAFFIC

LAST REVISION 06-13-12
DATE PLOTTED => 30-AUG-2012
TIME PLOTTED => 09:09

Dist	COUNTY	ROUTE	POST MILES TOTAL PROJECT	SHEET No.	TOTAL SHEETS
03	Nev	20	R4.1/R17.4	48	106

Joyce K. Loftus 6-4-12
REGISTERED CIVIL ENGINEER DATE

6-4-12
PLANS APPROVAL DATE

REGISTERED PROFESSIONAL ENGINEER
Joyce K. Loftus
No. 38426
Exp. 3-31-13
CIVIL
STATE OF CALIFORNIA

THE STATE OF CALIFORNIA OR ITS OFFICERS OR AGENTS SHALL NOT BE RESPONSIBLE FOR THE ACCURACY OR COMPLETENESS OF SCANNED COPIES OF THIS PLAN SHEET.

ROADSIDE SIGN QUANTITIES (CONTINUED)

SIGN NUMBER (SHT-NO.)	SIGN CODE FEDERAL	SIGN CODE CALIFORNIA	PANEL SIZE INCHES	"C" DIM IN FEET	POST SIZE AND LENGTH METAL POST 2½"x2½"	ROADSIDE SIGN ONE POST EA	REMOVE ROADSIDE SIGN EA	REMARKS
2-1	W4-1R						1	
2-2	W4-1R		48 x 48	7	14′	1		
2-3		G84-3(183)					1	
2-4		G84-3(183)	48 x 60	7	14′	1		
2-5	W4-1R						1	
2-6	W4-1R		48 x 48	7	14′	1		
2-7		G84-3(185)					1	
2-8		G84-3(185)	48 x 60	7	14′	1		
2-9		G84-3(183)	48 x 60	7	14′	1		
2-10		G84-3(183)					1	
2-11	W4-1R		48 x 48	7	14′	1		
2-12	W4-1R						1	
2-13		G84-3(185A)	48 x 60	7	14′	1		
2-14		G84-3(185A)					1	
2-15	W4-1R		48 x 48	7	14′	1		
2-16	W4-1R						1	
2-17	W4-1R						1	
2-18	W4-1R		48 x 48	7	14′	1		
2-19	W4-1R						1	
2-20	W4-1R		48 x 48	7	14′	1		
2-21		G84-3(186)					1	
2-22		G84-3(186)	48 x 60	7	14′	1		
2-23		G84-3(185B)	48 x 60	7	14′	1		
2-24		G84-3(185B)					1	
2-25	W4-1R						1	
2-26	W4-1R		48 x 48	7	14′	1		
2-27	W4-1R		48 x 48	7	14′	1		
2-28	W4-1R						1	
SHEET TOTAL						14	14	

SIGN QUANTITIES

SQ-2

STATE OF CALIFORNIA - DEPARTMENT OF TRANSPORTATION
Caltrans
TRAFFIC

FUNCTIONAL SUPERVISOR: ARSHAD IQBAL
CALCULATED-DESIGNED BY: JOYCE LOFTUS
CHECKED BY: CHUCK COOK
REVISED BY
DATE REVISED

LAST REVISION 06-13-12
DATE PLOTTED => 30-AUG-2012
TIME PLOTTED => 09:09

Dist	COUNTY	ROUTE	POST MILES TOTAL PROJECT	SHEET No.	TOTAL SHEETS
03	Nev	20	R4.1/R17.4	49	106

Joyce K. Loftus 6-4-12
REGISTERED CIVIL ENGINEER DATE

6-4-12
PLANS APPROVAL DATE

REGISTERED PROFESSIONAL ENGINEER
Joyce K. Loftus
No. 38426
Exp. 3-31-13
CIVIL
STATE OF CALIFORNIA

THE STATE OF CALIFORNIA OR ITS OFFICERS OR AGENTS SHALL NOT BE RESPONSIBLE FOR THE ACCURACY OR COMPLETENESS OF SCANNED COPIES OF THIS PLAN SHEET.

ROADSIDE SIGN QUANTITIES (CONTINUED)

SIGN NUMBER (SHT-NO.)	SIGN CODE FEDERAL	SIGN CODE CALIFORNIA	PANEL SIZE INCHES	"C" DIM IN FEET	POST SIZE AND LENGTH METAL POST 2½"x2½"	ROADSIDE SIGN ONE POST EA	REMOVE ROADSIDE SIGN EA	REMARKS
3-1	R1-1		30	7	12′	1		
3-2	R1-1		30				1	
3-3	R5-1 R5-1a						1	
3-4	R5-1 R5-1a		36 x 36 36 x 24	2	8′	1		
3-5	R5-1 R5-1a		36 x 36 36 x 24	2	8′	1		
3-6	R5-1 R5-1a						1	
3-7	W4-1R						1	
3-8	W4-1R		36 x 36	7	14′	1		
3-9	M3-2 M3-1	G92 G28-2(20) G28-2(49) G43	48 x 30 24 x 25 24 x 12 24 x 25 24 x 12 21 x 15	4	12′	1		
3-10	M3-2 M3-1	G92 G28-2(20) G28-2(49) G43					1	
3-11	M3-4 M3-3	G92 G28-2(20) G28-2(49) G43	48 x 30 24 x 25 24 x 12 24 x 25 24 x 12 21 x 15	4	12′	1		
3-12	M3-4 M3-3	G92 G28-2(20) G28-2(49) G43					1	
SHEET TOTAL						6	6	
SHEET TOTAL FROM SQ-1						15	15	
SHEET TOTAL FROM SQ-2						14	14	
TOTAL						35	35	

SIGN QUANTITIES

SQ-3

STATE OF CALIFORNIA - DEPARTMENT OF TRANSPORTATION
Caltrans
TRAFFIC

FUNCTIONAL SUPERVISOR: ARSHAD IQBAL
CALCULATED-DESIGNED BY: JOYCE LOFTUS
CHECKED BY: CHUCK COOK
REVISED BY
DATE REVISED

LAST REVISION 06-13-12
DATE PLOTTED => 30-AUG-2012
TIME PLOTTED => 09:09

Dist	COUNTY	ROUTE	POST MILES TOTAL PROJECT	SHEET No.	TOTAL SHEETS
03	Nev	20	R4.1/R17.4	50	106

Joyce K Loftus 6-4-12
REGISTERED CIVIL ENGINEER DATE

6-4-12
PLANS APPROVAL DATE

REGISTERED PROFESSIONAL ENGINEER
Joyce K. Loftus
No. 38426
Exp. 3-31-13
CIVIL
STATE OF CALIFORNIA

THE STATE OF CALIFORNIA OR ITS OFFICERS OR AGENTS SHALL NOT BE RESPONSIBLE FOR THE ACCURACY OR COMPLETENESS OF SCANNED COPIES OF THIS PLAN SHEET.

ROADSIDE SIGN PANEL QUANTITIES (CONTRACTOR FURNISHED)

SIGN CODE		SIGN MESSAGE/DESCRIPTION	PANEL SIZE L x D	PANEL AREA	NUMBER OF PANELS	BACKGROUND		LEGEND		PROTECTIVE OVERLAY	FURNISH SINGLE SHEET ALUMINUM SIGN	
											UNFRAMED	
						SHEETING COLOR	RETROREFLECTIVE ASTM TYPE	SHEETING COLOR	RETROREFLECTIVE ASTM TYPE	PREMIUM	0.063"	0.080"
FEDERAL	CALIFORNIA		INCHES	SQFT							SQFT	SQFT
R1-1		STOP	30	5.18	1	RED	IX	WHITE	IX	X	5.18	
R5-1		DO NOT ENTER	36 x 36	9.00	2	RED	IX	WHITE	IX	X	18.00	
R5-1a		WRONG WAY	36 x 24	6.00	2	RED	IX	WHITE	IX	X	12.00	
W4-1R		MERGE (SYMBOL)	36 x 36	9.00	1	YELLOW	IX	BLACK		X	9.00	
W4-1R		MERGE (SYMBOL)	48 x 48	16.00	16	YELLOW	IX	BLACK		X		256.00
	G28-2(20)	CALIFORNIA 20 (ROUTE MARKER)	24 x 25	4.17	1	GREEN	III	WHITE	III	X	8.34	
	G28-2(49)	CALIFORNIA 49 (ROUTE MARKER)	24 x 25	4.17	1	GREEN	III	WHITE	III	X	8.34	
	G43	DIRECTION ARROW	21 x 15	2.19	1	GREEN	III	WHITE	III	X	2.19	
	G84	EXIT WITH ARROW	54 x 48	18.00	3	GREEN	III	WHITE	III	X		54.00
	G84-3(182A)	EXIT 182A WITH ARROW	48 x 60	20.00	2	GREEN	III	WHITE	III	X		40.00
	G84-3(182B)	EXIT 182B WITH ARROW	48 x 60	20.00	2	GREEN	III	WHITE	III	X		40.00
	G84-3(183)	EXIT 183 WITH ARROW	48 x 60	20.00	2	GREEN	III	WHITE	III	X		40.00
	G84-3(185)	EXIT 185 WITH ARROW	48 x 60	20.00	1	GREEN	III	WHITE	III	X		20.00
	G84-3(185A)	EXIT 185A WITH ARROW	48 x 60	20.00	1	GREEN	III	WHITE	III	X		20.00
	G84-3(185B)	EXIT 185B WITH ARROW	48 x 60	20.00	1	GREEN	III	WHITE	III	X		20.00
	G84-3(186)	EXIT 186 WITH ARROW	48 x 60	20.00	1	GREEN	III	WHITE	III	X		20.00
	G92	FREEWAY ENTRANCE	48 x 30	10.00	1	GREEN	IX	WHITE	IX	X		20.00
M3-1		NORTH	24 x 12	2.00	1	GREEN	III	WHITE	III	X	2.00	
M3-2		EAST	24 x 12	2.00	1	GREEN	III	WHITE	III	X	2.00	
M3-3		SOUTH	24 x 12	2.00	1	GREEN	III	WHITE	III	X	2.00	
M3-4		WEST	24 x 12	2.00	1	GREEN	III	WHITE	III	X	2.00	
TOTAL											71.05	530.00

SIGN QUANTITIES

SQ-4

STATE OF CALIFORNIA - DEPARTMENT OF TRANSPORTATION
Caltrans
TRAFFIC

FUNCTIONAL SUPERVISOR: ARSHAD IQBAL
CALCULATED-DESIGNED BY: CHUCK COOK
CHECKED BY: JOYCE LOFTUS
REVISED BY
DATE REVISED

LAST REVISION 06-13-12
DATE PLOTTED => 30-AUG-2012
TIME PLOTTED => 09:09

Dist	COUNTY	ROUTE	POST MILES TOTAL PROJECT	SHEET No.	TOTAL SHEETS
03	Nev	20	R4.1/R17.4	51	106

REGISTERED CIVIL ENGINEER 6-4-12 DATE

6-4-12
PLANS APPROVAL DATE

REGISTERED PROFESSIONAL ENGINEER JOHN D. WELCH No. 58303 Exp. 6-30-14 CIVIL STATE OF CALIFORNIA

THE STATE OF CALIFORNIA OR ITS OFFICERS OR AGENTS SHALL NOT BE RESPONSIBLE FOR THE ACCURACY OR COMPLETENESS OF SCANNED COPIES OF THIS PLAN SHEET.

ROADWAY QUANTITIES

LOCATION	COLD PLANE AC PAVEMENT	REMOVE AC SURFACING	CRACK TREATMENT	RUBBERIZED HOT MIX ASPHALT (GAP GRADED)	TACK COAT
	SQYD	SQYD	LNMI	TON	TON
PM R4.10 TO PM R6.30	65,422	867		8,849	24
PM R10.20 TO PM R12.84	106,755	4,222	9.5	14,339	41
PM R12.94 TO PM R13.63	37,144	4,967	3.0	4,235	16
PM R14.66 TO PM R17.40	165,178	2,411	14.3	22,474	63
SUBTOTAL	371,499	12,467	26.8	49,897	144
RHMA-O QUANTITIES (THIS Sht)					15
TOTAL	371,499	12,467	26.8	49,897	159

RHMA-O QUANTITIES

LOCATION	RUBBERIZED HOT MIX ASPHALT (OPEN GRADED)	TACK COAT
	TON	TON
PM R4.10 TO PM R6.30	2,586	8
PM R10.20 TO PM R11.82	2,106	7
SUBTOTAL	4,692	15 *
TOTAL	4,692	—

* QUANTITY INCLUDED IN ROADWAY QUANTITY TABLE, THIS SHEET

SHOULDER BACKING

LOCATION	SHOULDER BACKING
	TON
PM R4.10 TO PM R6.30	843
PM R10.20 TO PM R12.20	997
TOTAL	1840

RUMBLE STRIP

LOCATION	CENTERLINE RUMBLE STRIP (HMA, GROUND-IN INDENTATIONS)
	STA
PM R10.20 TO PM R11.82	93
TOTAL	93

Temp WATER POLLUTION CONTROL

LOCATION	TEMPORARY DI PROTECTION
	EA
PM R4.10 TO PM R17.40	7
TOTAL	7

FOG SEAL

LOCATION	ASPHALTIC EMULSION (FOG SEAL COAT)
	TON
PM R4.10 TO PM R17.40	3
TOTAL	3

SUMMARY OF QUANTITIES

Q-1

REVISED BY | DATE REVISED
JOHN WELCH | DAVINDER MINHAS
CALCULATED-DESIGNED BY | CHECKED BY
FUNCTIONAL SUPERVISOR: MASTRI ALVANDI
STATE OF CALIFORNIA - DEPARTMENT OF TRANSPORTATION
Caltrans DIVISION OF ENGINEERING

LAST REVISION 3-27-12 | DATE PLOTTED => 30-AUG-2012 | TIME PLOTTED => 09:09

Dist	COUNTY	ROUTE	POST MILES TOTAL PROJECT	SHEET No.	TOTAL SHEETS
03	Nev	20	R4.1/R17.4	52	106

REGISTERED CIVIL ENGINEER 6-4-12 DATE

6-4-12
PLANS APPROVAL DATE

REGISTERED PROFESSIONAL ENGINEER JOHN D. WELCH No. 58303 Exp. 6-30-14 CIVIL STATE OF CALIFORNIA

THE STATE OF CALIFORNIA OR ITS OFFICERS OR AGENTS SHALL NOT BE RESPONSIBLE FOR THE ACCURACY OR COMPLETENESS OF SCANNED COPIES OF THIS PLAN SHEET.

DIKE, MINOR HMA, PLACE HMA (Misc AREA)

LOCATION			REMOVE AC DIKE	PLACE HMA DIKE (TYPE A)	PLACE HMA DIKE (TYPE D)	PLACE HMA DIKE (TYPE E)	MINOR HMA	PLACE HMA (Misc AREA)	IMPORTED BORROW
POST MILE FROM	POST MILE TO	DIRECTION	LF	LF	LF	LF	TON	SQYD	CY
R12.12	R12.14	EB	106		106		6.3		9
R13.72	R13.77	EB	264	264			7.2		
R15.04		EB	15	15			0.4		
R15.05	R15.40	EB	1,848	1848			50.5		
R15.45	R15.49	EB	211						
R15.49	R15.60	EB	580	580			15.9		
R15.92	R15.96	EB	211	211			5.8		
R15.96	R16.02	EB	316			316	8.3		12
R16.34	R16.57	EB	1,214			1,214	32.0		45
R12.25	R12.28	WB	160	160			4.3		
R12.74	R12.85	WB	581	581			15.9		
R13.26	R13.38	WB	634	634			17.3		
R14.60	R14.67	WB	370			370	9.7		14
R14.87	R15.04	WB	898	898			24.5		
R15.51	R15.82	WB	1,637	1637			44.8		
R16.05	R16.18	WB	686			686	18.1		26
R16.47	R16.65	WB	950			1,056	27.8		39
R16.65	R16.66	WB	53	53			1.4		
		SUBTOTAL	10,734	6,881	106	3,642	290.2	0	145
FROM SHEET DQ-1			945	131			213.6	699	
FROM SHEET Q-4 (ADA CURB RAMPS)						8	3.1	14	
		TOTAL	11,679	7,012	106	3,650	506.9	713	145

SUMMARY OF QUANTITIES

Q-2

STATE OF CALIFORNIA - DEPARTMENT OF TRANSPORTATION
Caltrans DIVISION OF ENGINEERING

FUNCTIONAL SUPERVISOR: MASTRI ALVANDI
CALCULATED-DESIGNED BY: JOHN WELCH
CHECKED BY: DAVINDER MINHAS
REVISED BY / DATE REVISED

LAST REVISION 3-27-12
DATE PLOTTED => 30-AUG-2012
TIME PLOTTED => 09:09

Dist	COUNTY	ROUTE	POST MILES TOTAL PROJECT	SHEET No.	TOTAL SHEETS
03	Nev	20	R4.1/R17.4	53	106

REGISTERED CIVIL ENGINEER DATE 6-4-12

6-4-12
PLANS APPROVAL DATE

REGISTERED PROFESSIONAL ENGINEER JOHN D. WELCH No. 58303 Exp. 6-30-14 CIVIL STATE OF CALIFORNIA

THE STATE OF CALIFORNIA OR ITS OFFICERS OR AGENTS SHALL NOT BE RESPONSIBLE FOR THE ACCURACY OR COMPLETENESS OF SCANNED COPIES OF THIS PLAN SHEET.

REPLACE ASPHALT CONCRETE SURFACING

LOCATION *				(N) DIMENSIONS			REPLACE AC SURFACING	COMMENTS
POST MILE		DIRECTION	LANE NUMBER	LENGTH	WIDTH	DEPTH		
FROM	TO			LF	LF	LF	CY	
5.75	5.79	EB	1	211	6	0.20	9.4	NEAR CATTLE Dr (2 LANE SECTION)
12.08		EB	RAMP	264	12	0.25	29.3	EB ON-RAMP FROM MCCOURTNEY St
14.66		EB	RAMP	528	12	0.25	58.7	EB OFF-RAMP TO BRUNSWICK Rd
14.95	15.02	EB	2	370	12	0.25	41.1	BETWEEN BRUNSWICK Rd AND BANNER RIDGE Rd
15.20	15.21	EB	2	53	12	0.25	5.9	BETWEEN BRUNSWICK Rd AND BANNER RIDGE Rd
15.30	15.31	EB	2	53	6	0.25	2.9	NEAR BANNER RIDGE Rd
15.71	15.72	EB	2	53	6	0.25	2.9	NEAR EB OFF-RAMP TO GOLD FLAT Rd (EXIT 185A)
15.79	15.82	EB	1	158	12	0.25	17.6	NEAR GOLD FLAT Rd
15.79	15.82	EB	2	158	12	0.25	17.6	NEAR GOLD FLAT Rd
16.10	16.13	EB	2	158	12	0.25	17.6	NEAR SACRAMENTO St
16.41	16.43	EB	2	106	6	0.25	5.9	NEAR SACRAMENTO St
16.49	16.50	EB	2	53	12	0.25	5.9	NEAR SACRAMENTO St
12.09		WB	RAMP	264	12	0.25	29.3	WB OFF-RAMP TO MILL St
12.10	12.14	WB	2	210	12	0.25	23.3	NEAR MILL St UC
12.73		WB	RAMP	898	12	0.25	99.8	WB ON-RAMP FROM S. AUBURN St
13.16	13.20	WB	2	211	6	0.25	11.7	NEAR BENNETT St UC (NOT ON STRUCTURE)
14.61	14.69	WB	2	422	12	0.25	46.9	NEAR BRUNSWICK Rd
15.01		WB	RAMP	158	6	0.25	8.8	WB OFF-RAMP TO BRUNSWICK Rd
14.99	15.96	WB	2	5,122	12	0.25	569.1	BETWEEN BRUNSWICK AND GOLD FLAT Rd
16.05		WB	RAMP	211	12	0.25	23.3	WB OFF-RAMP TO GOLD FLAT Rd
16.11	16.18	WB	2	370	6	0.25	20.6	BETWEEN SACRAMENTO St AND GOLD FLAT Rd
16.31	16.33	WB	2	106	12	0.25	11.8	BETWEEN SACRAMENTO St AND GOLD FLAT Rd
16.46	16.57	WB	2	581	12	0.25	64.6	NEAR SACRAMENTO St
17.17	17.18	WB	2	53	6	0.25	2.9	NEAR WASHINGTON St
17.37	17.40	WB	2	158	12	0.25	17.6	20/49 NORTH JUNCTION
TOTAL							1,144.5	

* EXACT LOCATIONS TO BE DETERMINED BY THE ENGINEER.
(N) NOT A SEPARATE PAY ITEM. FOR INFORMATION ONLY.

SUMMARY OF QUANTITIES

Q-3

STATE OF CALIFORNIA - DEPARTMENT OF TRANSPORTATION
Caltrans DIVISION OF ENGINEERING

FUNCTIONAL SUPERVISOR: MASTRI ALVANDI
CALCULATED-DESIGNED BY: JOHN WELCH
CHECKED BY: DAVINDER MINHAS
REVISED BY
DATE REVISED

LAST REVISION 3-27-12
DATE PLOTTED => 30-AUG-2012
TIME PLOTTED => 09:09

Dist	COUNTY	ROUTE	POST MILES TOTAL PROJECT	SHEET No.	TOTAL SHEETS
03	Nev	20	R4.1/R17.4	54	106

REGISTERED CIVIL ENGINEER 6-4-12 DATE

6-4-12
PLANS APPROVAL DATE

REGISTERED PROFESSIONAL ENGINEER JOHN D. WELCH No. 58303 Exp. 6-30-14 CIVIL STATE OF CALIFORNIA

THE STATE OF CALIFORNIA OR ITS OFFICERS OR AGENTS SHALL NOT BE RESPONSIBLE FOR THE ACCURACY OR COMPLETENESS OF SCANNED COPIES OF THIS PLAN SHEET.

NOTES:

1. REMOVE CONCRETE (CURB, GUTTER, AND SIDEWALK) FOR ADA CURB RAMPS INCLUDES REMOVE CONCRETE (CURB AND GUTTER), REMOVE ASPHALT CONCRETE, AND REMOVE CONCRETE (SIDEWALK).
2. MINOR CONCRETE (CURB, SIDEWALK, AND CURB RAMP) FOR ADA CURB RAMPS INCLUDES A1-6 CURB, B2-6, DETECTABLE WARNING SURFACE. A2-6 CURB AND GUTTER, RETAINING CURB, AND SIDEWALK/ISLAND SURFACE.
3. CURB RAMP DETECTABLE WARNING SURFACES FOR NEW CURB RAMPS WILL BE PAID FOR AS PART OF MINOR CONCRETE (CURB, SIDEWALK, AND CURB RAMP).
4. DETECTABLE WARNING SURFACE FOR THE CURB RAMP WITHOUT MINOR CONCRETE WORK WILL BE PAID FOR AS SHOWN ON QUANTITY SHEETS.

ADA CURB RAMPS

LOCATION						REMOVE CONCRETE (CURB, GUTTER, AND SIDEWALK)	MINOR CONCRETE (CURB, SIDEWALK, AND CURB RAMP)	PLACE HMA DIKE (TYPE E)	MINOR HMA	PLACE HMA (Misc AREA)	CURB RAMP DETECTABLE WARNING SURFACE	CURB AND GUTTER LENGTH TO BE REMOVED (N)	SIDEWALK AREA TO BE REMOVED (N)	ASPHALT CONCRETE AREA TO BE REMOVED (N)	A1-6 CURB (N)	A2-6 CURB (N)	B2-6 CURB (N)	RETAINING CURB (N)	SIDEWALK/ ISLAND SURFACE (N)	CURB RAMP DETECTABLE WARNING SURFACE (N)
COUNTY	ROUTE	PM	STREET/RAMP	SHEET #	CURB RAMP #	CY	CY	LF	TON	SQYD	SQFT	LF	SQYD	SQYD	LF	LF	LF	LF	SQYD	SQFT
Nev	20	12.1	WB ONRAMP FROM MILL St	C-1	1	1	2					8	3			14		22	6	17
Nev	20	12.2	ISLAND AT WB 20/49 AT 20/49 Sep	C-2	2	6	12					114		53			114	34	53	31
Nev	20	12.3	EB 20/49 AT 20/49 Sep	C-2	3	7	7					50	21		15	50		30	21	27
Nev	20/49	12.8	S AUBURN St	C-3	4	4	4					42	13			42		25	13	25
Nev	20/49	12.8	S AUBURN St	C-4	5	4	4	8	3.1	14		40	13	14		29		23	13	24
Nev	20/49	12.8	S AUBURN St	C-4	6						17									
Nev	20/49	12.8	S AUBURN St	C-4	7	5	5					39	17			39		32	17	29
					SUBTOTAL	27	34	8 *	3.1 *	14 *	17	293	67	67	15	174	114	166	123	153
					TOTAL	27	34	—	—	—	17									

* FOR TOTAL PLACE HMA DIKE (TYPE E), MINOR HMA, AND PLACE HMA (Misc AREA) QUANTITIES, SEE SHEET Q-2.
(N) NOT A SEPARATE PAY ITEM. FOR INFORMATION ONLY.

SUMMARY OF QUANTITIES

Q-4

STATE OF CALIFORNIA - DEPARTMENT OF TRANSPORTATION
Caltrans DIVISION OF ENGINEERING

FUNCTIONAL SUPERVISOR: MASTRI ALVANDI
CALCULATED-DESIGNED BY: JOHN WELCH
CHECKED BY: DAVINDER MINHAS
REVISED BY
DATE REVISED

LAST REVISION 3-27-12
DATE PLOTTED => 30-AUG-2012
TIME PLOTTED => 09:09

Dist	COUNTY	ROUTE	POST MILES TOTAL PROJECT	SHEET No.	TOTAL SHEETS
03	Nev	20	R4.1/R17.4	55	106

6-4-12
LICENSED LANDSCAPE ARCHITECT

6-4-12
PLANS APPROVAL DATE

LICENSED LANDSCAPE ARCHITECT JEFFREY L. PIETRZAK No. 4457 Signature 12-31-13 Renewal Date Date STATE OF CALIFORNIA

THE STATE OF CALIFORNIA OR ITS OFFICERS OR AGENTS SHALL NOT BE RESPONSIBLE FOR THE ACCURACY OR COMPLETENESS OF SCANNED COPIES OF THIS PLAN SHEET.

ABBREVIATIONS:

ADL AERIALLY DEPOSITED LEAD

LEGEND:

- MINOR CONCRETE (PATTERNED)
- EXISTING PAVEMENT
- EROSION CONTROL (TYPE 1)
- EROSION CONTROL (TYPE 2)
- IMPORTED TOPSOIL
- No. MINOR CONCRETE (PATTERNED) LOCATION NUMBER
- No. EROSION CONTROL LOCATION NUMBER
- DIRECTION OF TRAFFIC
- EXISTING VEGETATION TO BE PRESERVED

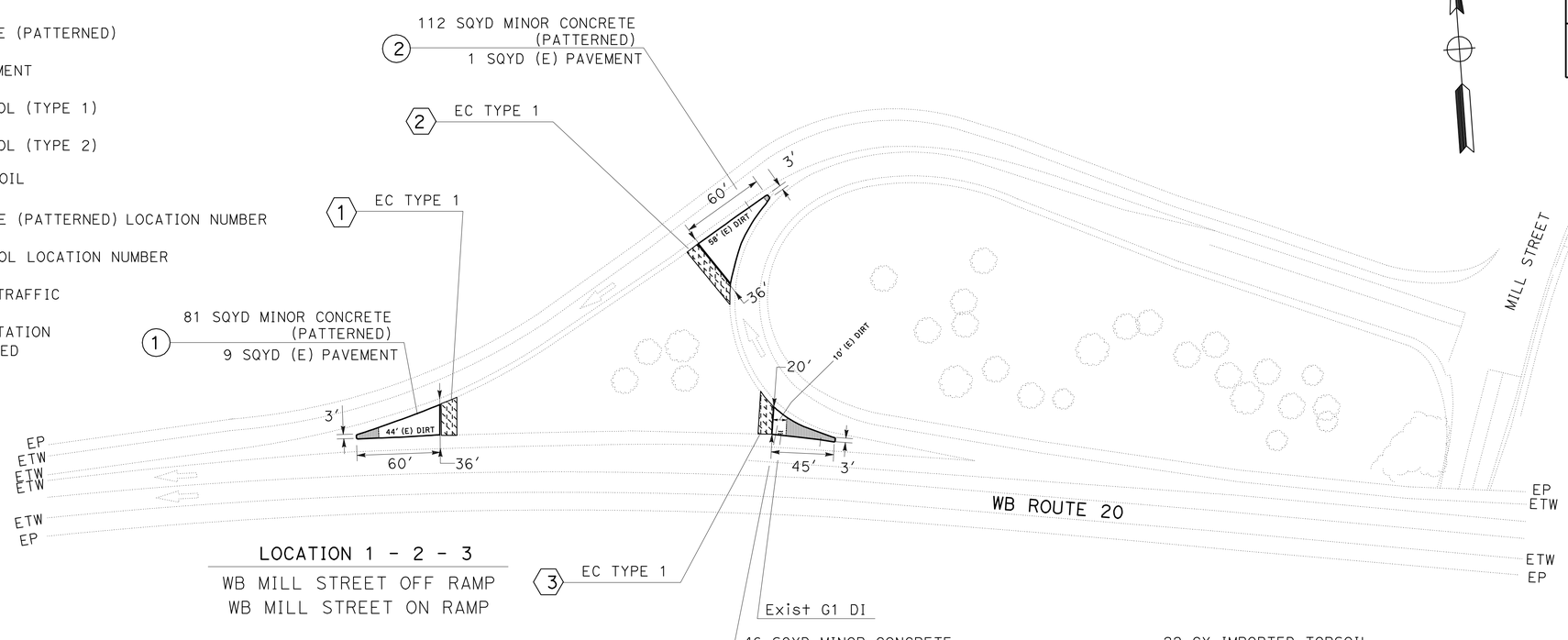

LANDSCAPE DETAILS

NO SCALE

LD-1

STATE OF CALIFORNIA - DEPARTMENT OF TRANSPORTATION
Caltrans® LANDSCAPE ARCHITECTURE

SENIOR LANDSCAPE ARCHITECT: T. CHRIS JOHNSON

CALCULATED-DESIGNED BY: J. PIETRZAK
CHECKED BY

REVISED BY
DATE REVISED

LAST REVISION 00-00-00
DATE PLOTTED => 30-AUG-2012
TIME PLOTTED => 09:09

Dist	COUNTY	ROUTE	POST MILES TOTAL PROJECT	SHEET No.	TOTAL SHEETS
03	Nev	20	R4.1/R17.4	56	106

6-4-12
LICENSED LANDSCAPE ARCHITECT

6-4-12
PLANS APPROVAL DATE

LICENSED LANDSCAPE ARCHITECT JEFFREY L. PIETRZAK No. 4457 Signature 12-31-13 Renewal Date Date STATE OF CALIFORNIA

THE STATE OF CALIFORNIA OR ITS OFFICERS OR AGENTS SHALL NOT BE RESPONSIBLE FOR THE ACCURACY OR COMPLETENESS OF SCANNED COPIES OF THIS PLAN SHEET.

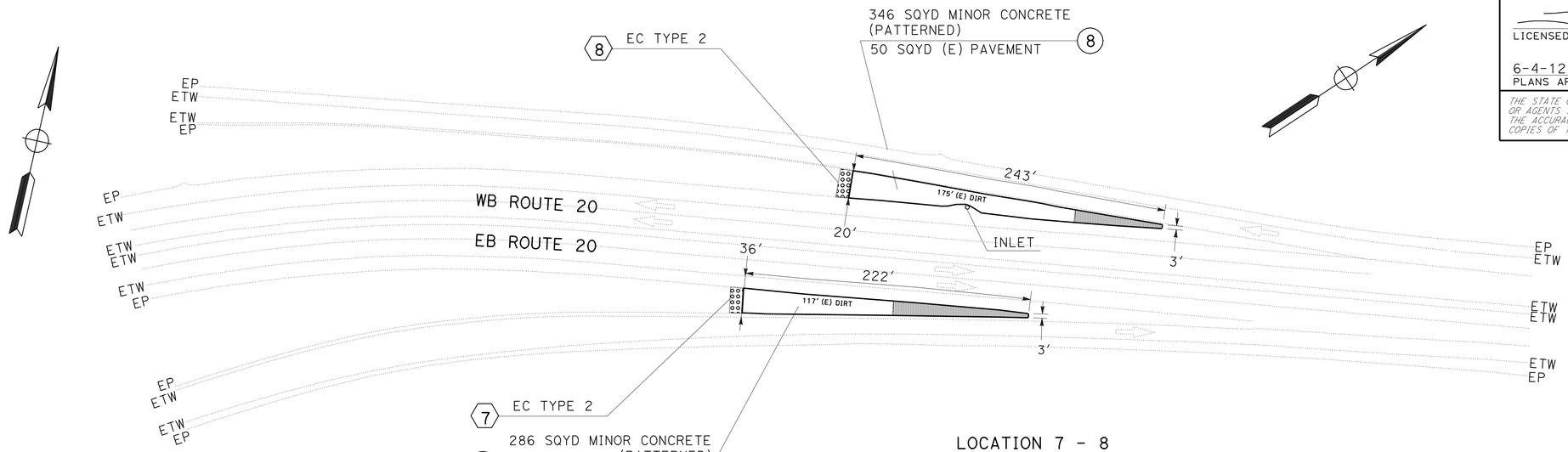

LOCATION 7 - 8

EB 20/49 TO EB 20 AT 20/49 SEPARATION
WB 20/49 TO WB 20 AT 20/49 SEPARATION

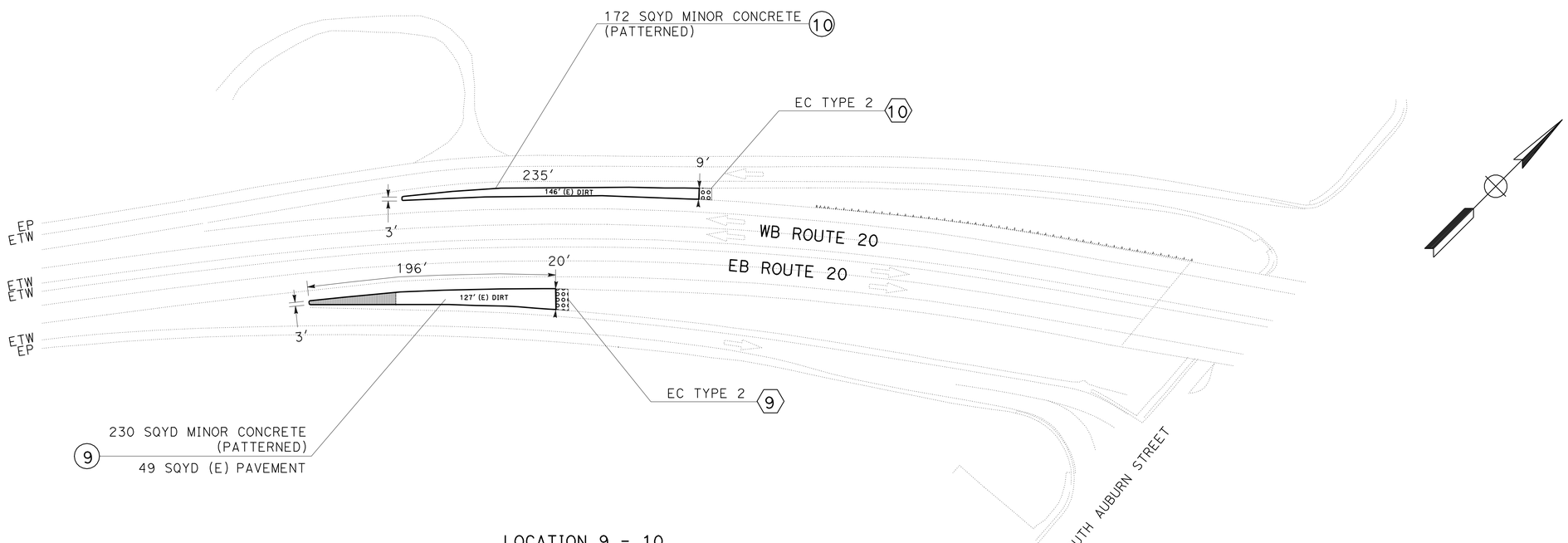

LOCATION 9 - 10

EB OFF RAMP TO SOUTH AUBURN STREET
WB ON RAMP FROM SOUTH AUBURN STREET

LANDSCAPE DETAILS

NO SCALE

LD-2

STATE OF CALIFORNIA - DEPARTMENT OF TRANSPORTATION
Caltrans® LANDSCAPE ARCHITECTURE

SENIOR LANDSCAPE ARCHITECT: T. CHRIS JOHNSON

CALCULATED-DESIGNED BY: J. PIETRZAK
CHECKED BY

REVISED BY | DATE REVISED

LAST REVISION 00-00-00 | DATE PLOTTED => 30-AUG-2012 | TIME PLOTTED => 09:10

Dist	COUNTY	ROUTE	POST MILES TOTAL PROJECT	SHEET No.	TOTAL SHEETS
03	Nev	20	R4.1/R17.4	57	106

6-4-12
LICENSED LANDSCAPE ARCHITECT

6-4-12
PLANS APPROVAL DATE

LICENSED LANDSCAPE ARCHITECT JEFFREY L. PIETRZAK No. 4457 Signature 12-31-13 Renewal Date Date STATE OF CALIFORNIA

THE STATE OF CALIFORNIA OR ITS OFFICERS OR AGENTS SHALL NOT BE RESPONSIBLE FOR THE ACCURACY OR COMPLETENESS OF SCANNED COPIES OF THIS PLAN SHEET.

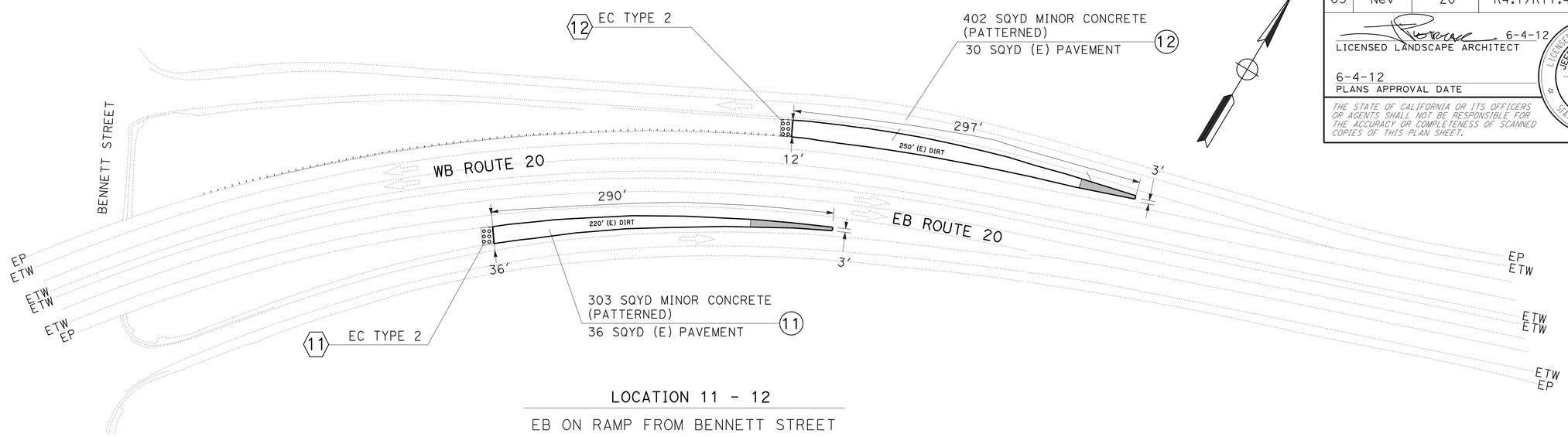

LOCATION 11 - 12

EB ON RAMP FROM BENNETT STREET
WB OFF RAMP TO BENNETT STREET

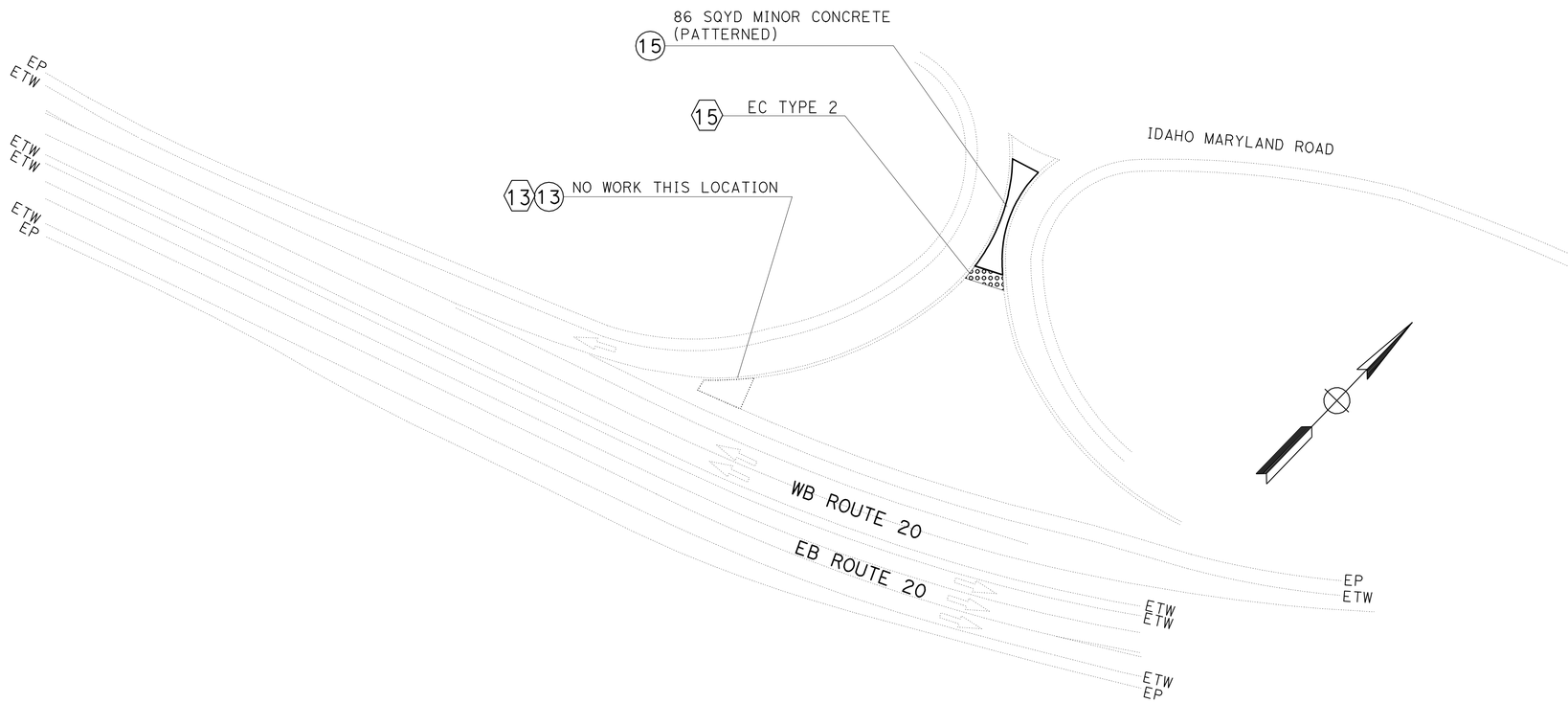

LOCATION 13 & 15

WB ON RAMP FROM IDAHO MARYLAND ROAD
WB ON RAMP FROM IDAHO MARYLAND ROAD

LANDSCAPE DETAILS

NO SCALE

LD-3

STATE OF CALIFORNIA - DEPARTMENT OF TRANSPORTATION
Caltrans® LANDSCAPE ARCHITECTURE

SENIOR LANDSCAPE ARCHITECT: T. CHRIS JOHNSON

CALCULATED-DESIGNED BY: J. PIETRZAK
CHECKED BY

REVISED BY
DATE REVISED

LAST REVISION 00-00-00
DATE PLOTTED => 30-AUG-2012
TIME PLOTTED => 09:10

Dist	COUNTY	ROUTE	POST MILES TOTAL PROJECT	SHEET No.	TOTAL SHEETS
03	Nev	20	R4.1/R17.4	58	106

6-4-12
LICENSED LANDSCAPE ARCHITECT

6-4-12
PLANS APPROVAL DATE

LICENSED LANDSCAPE ARCHITECT
JEFFREY L. PIETRZAK
No. 4457
Signature
12-31-13
Renewal Date
Date
STATE OF CALIFORNIA

THE STATE OF CALIFORNIA OR ITS OFFICERS OR AGENTS SHALL NOT BE RESPONSIBLE FOR THE ACCURACY OR COMPLETENESS OF SCANNED COPIES OF THIS PLAN SHEET.

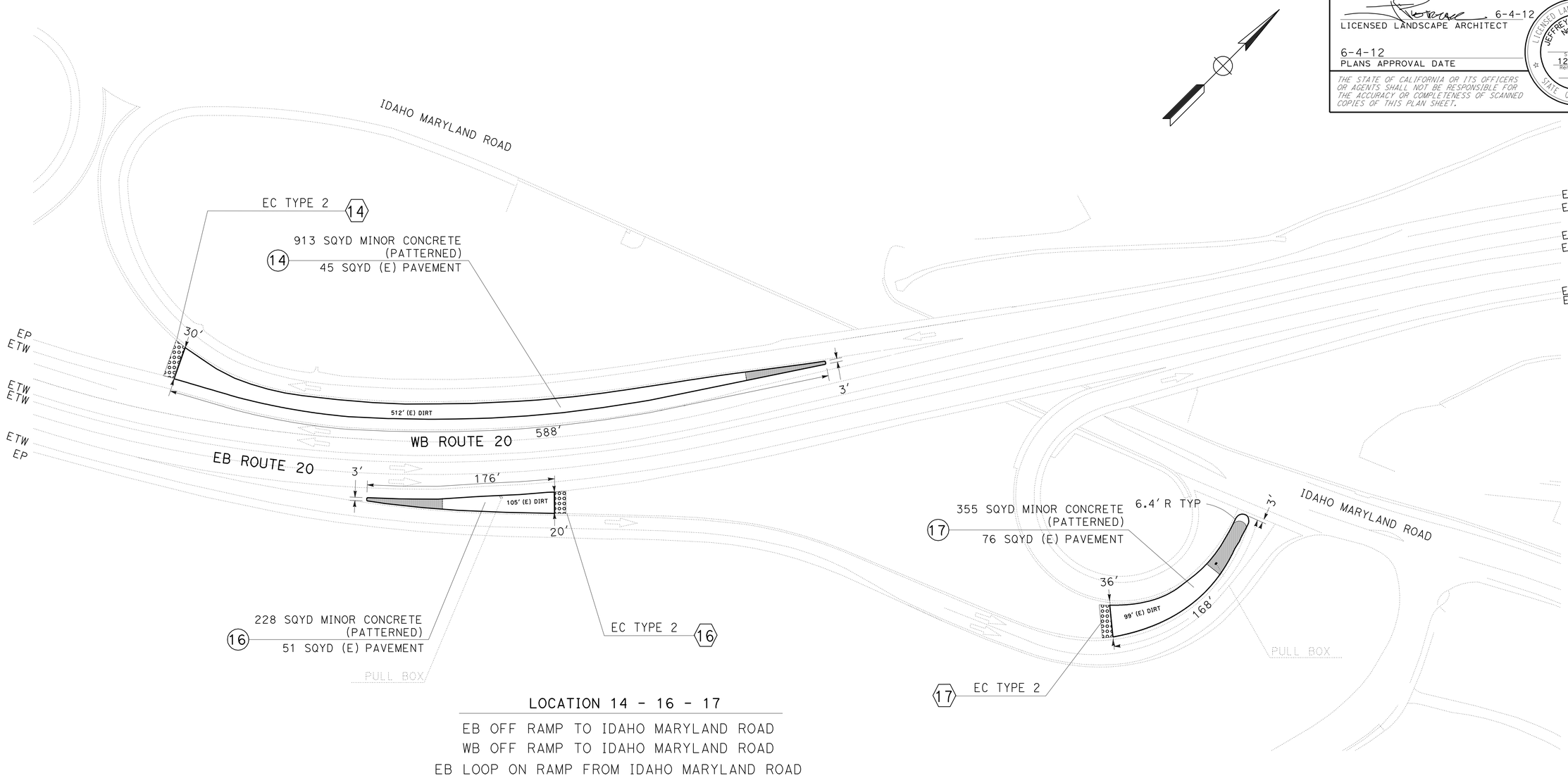

LOCATION 14 - 16 - 17

EB OFF RAMP TO IDAHO MARYLAND ROAD
WB OFF RAMP TO IDAHO MARYLAND ROAD
EB LOOP ON RAMP FROM IDAHO MARYLAND ROAD

LANDSCAPE DETAILS

NO SCALE

LD-4

STATE OF CALIFORNIA - DEPARTMENT OF TRANSPORTATION
Caltrans® LANDSCAPE ARCHITECTURE

SENIOR LANDSCAPE ARCHITECT: T. CHRIS JOHNSON

CALCULATED-DESIGNED BY: J. PIETRZAK
CHECKED BY

REVISED BY
DATE REVISED

LAST REVISION 00-00-00
DATE PLOTTED => 30-AUG-2012
TIME PLOTTED => 09:10

Dist	COUNTY	ROUTE	POST MILES TOTAL PROJECT	SHEET No.	TOTAL SHEETS
03	Nev	20	R4.1/R17.4	59	106

6-4-12
LICENSED LANDSCAPE ARCHITECT

6-4-12
PLANS APPROVAL DATE

LICENSED LANDSCAPE ARCHITECT
JEFFREY L. PIETRZAK
No. 4457
Signature
12-31-13
Renewal Date
Date
STATE OF CALIFORNIA

THE STATE OF CALIFORNIA OR ITS OFFICERS OR AGENTS SHALL NOT BE RESPONSIBLE FOR THE ACCURACY OR COMPLETENESS OF SCANNED COPIES OF THIS PLAN SHEET.

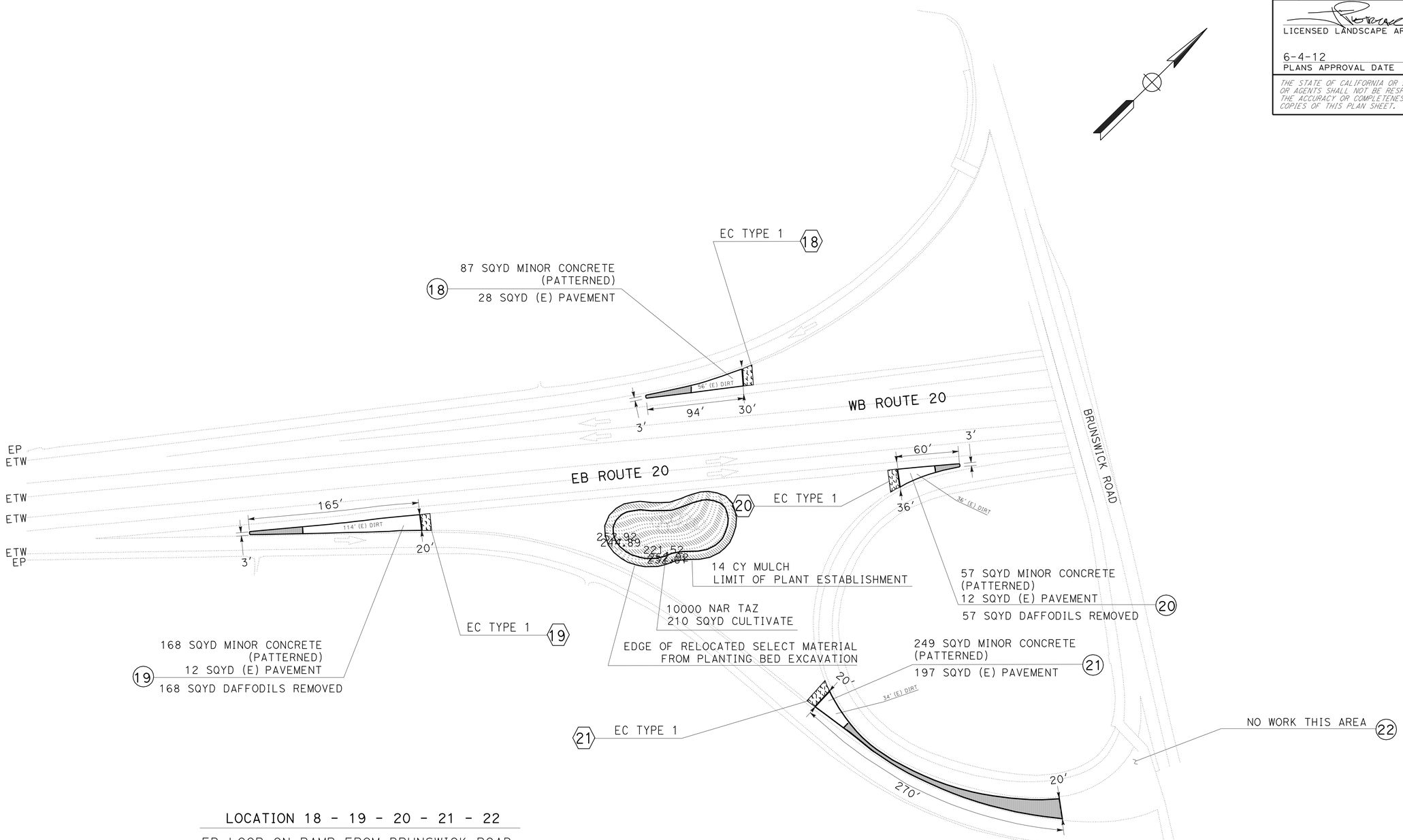

LOCATION 18 - 19 - 20 - 21 - 22

EB LOOP ON RAMP FROM BRUNSWICK ROAD
WB DIRECT ON RAMP FROM BRUNSWICK ROAD
EB OFF RAMP TO BRUNSWICK ROAD

LANDSCAPE DETAILS

NO SCALE

LD-5

STATE OF CALIFORNIA - DEPARTMENT OF TRANSPORTATION
Caltrans®
LANDSCAPE ARCHITECTURE

SENIOR LANDSCAPE ARCHITECT: T. CHRIS JOHNSON

CALCULATED-DESIGNED BY: J. PIETRZAK
CHECKED BY

REVISED BY
DATE REVISED

LAST REVISION 00-00-00
DATE PLOTTED => 30-AUG-2012
TIME PLOTTED => 09:10

Dist	COUNTY	ROUTE	POST MILES TOTAL PROJECT	SHEET No.	TOTAL SHEETS
03	Nev	20	R4.1/R17.4	60	106

6-4-12
LICENSED LANDSCAPE ARCHITECT

6-4-12
PLANS APPROVAL DATE

LICENSED LANDSCAPE ARCHITECT
JEFFREY L. PIETRZAK
No. 4457
Signature
12-31-13
Renewal Date
Date
STATE OF CALIFORNIA

THE STATE OF CALIFORNIA OR ITS OFFICERS OR AGENTS SHALL NOT BE RESPONSIBLE FOR THE ACCURACY OR COMPLETENESS OF SCANNED COPIES OF THIS PLAN SHEET.

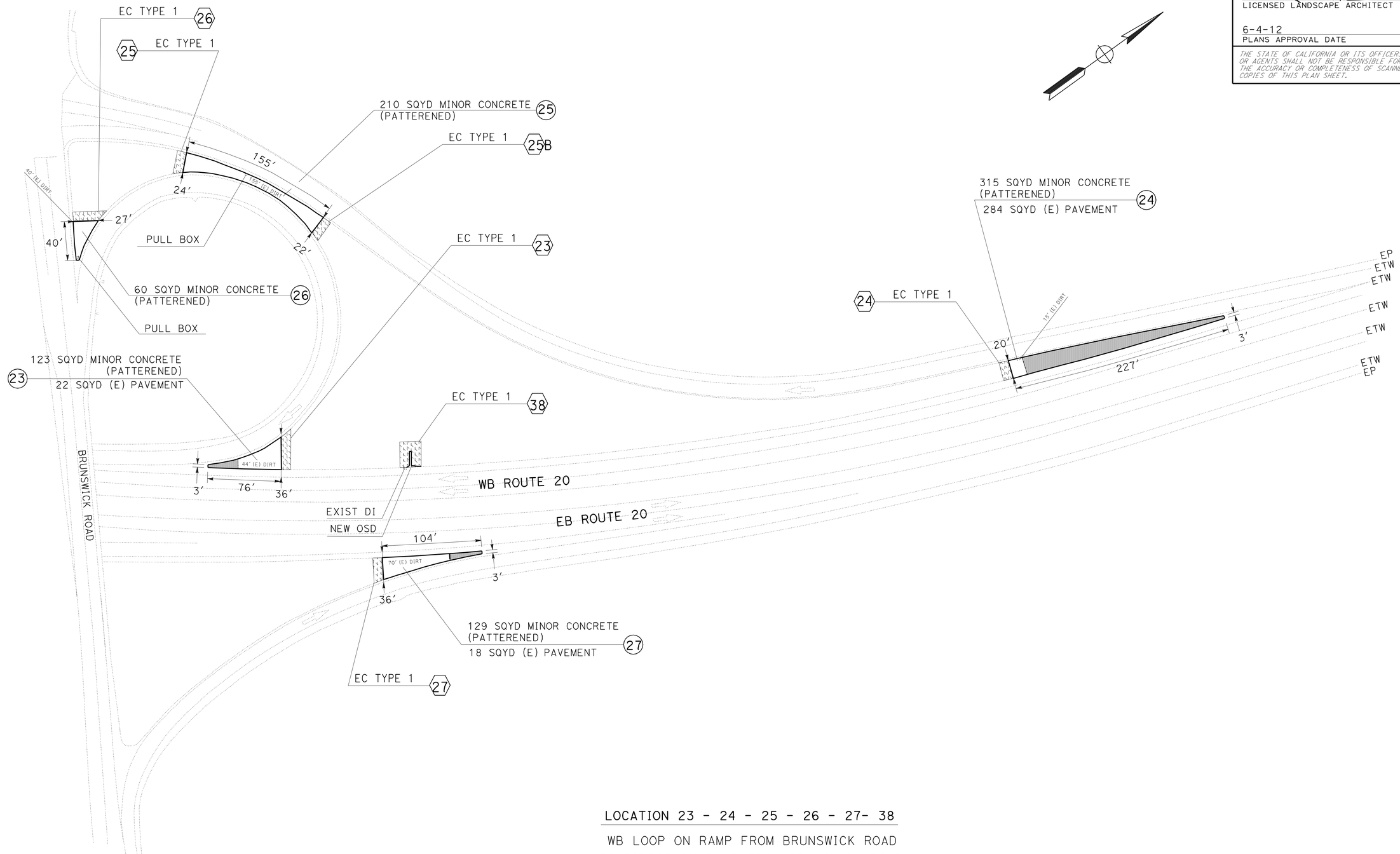

LOCATION 23 - 24 - 25 - 26 - 27- 38

WB LOOP ON RAMP FROM BRUNSWICK ROAD
EB DIRECT ON RAMP FROM BRUNSWICK ROAD

LANDSCAPE DETAILS

NO SCALE

LD-6

STATE OF CALIFORNIA - DEPARTMENT OF TRANSPORTATION
Caltrans® LANDSCAPE ARCHITECTURE

SENIOR LANDSCAPE ARCHITECT: T. CHRIS JOHNSON

CALCULATED-DESIGNED BY: J. PIETRZAK
CHECKED BY

REVISED BY
DATE REVISED

LAST REVISION 00-00-00
DATE PLOTTED => 30-AUG-2012
TIME PLOTTED => 09:10

Dist	COUNTY	ROUTE	POST MILES TOTAL PROJECT	SHEET No.	TOTAL SHEETS
03	Nev	20	R4.1/R17.4	61	106

6-4-12
LICENSED LANDSCAPE ARCHITECT

6-4-12
PLANS APPROVAL DATE

LICENSED LANDSCAPE ARCHITECT
JEFFREY L. PIETRZAK
No. 4457
Signature
12-31-13
Renewal Date
Date
STATE OF CALIFORNIA

THE STATE OF CALIFORNIA OR ITS OFFICERS OR AGENTS SHALL NOT BE RESPONSIBLE FOR THE ACCURACY OR COMPLETENESS OF SCANNED COPIES OF THIS PLAN SHEET.

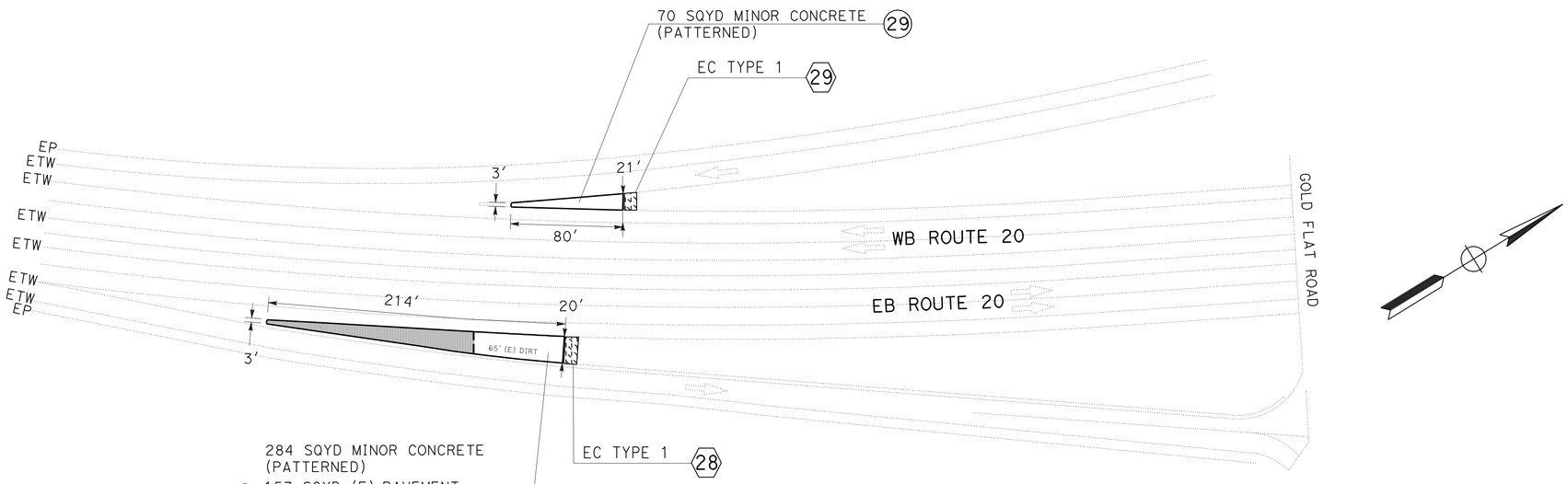

LOCATION 28 - 29

WB ON RAMP FROM GOLD FLAT ROAD
EB OFF RAMP TO GOLD FLAT ROAD

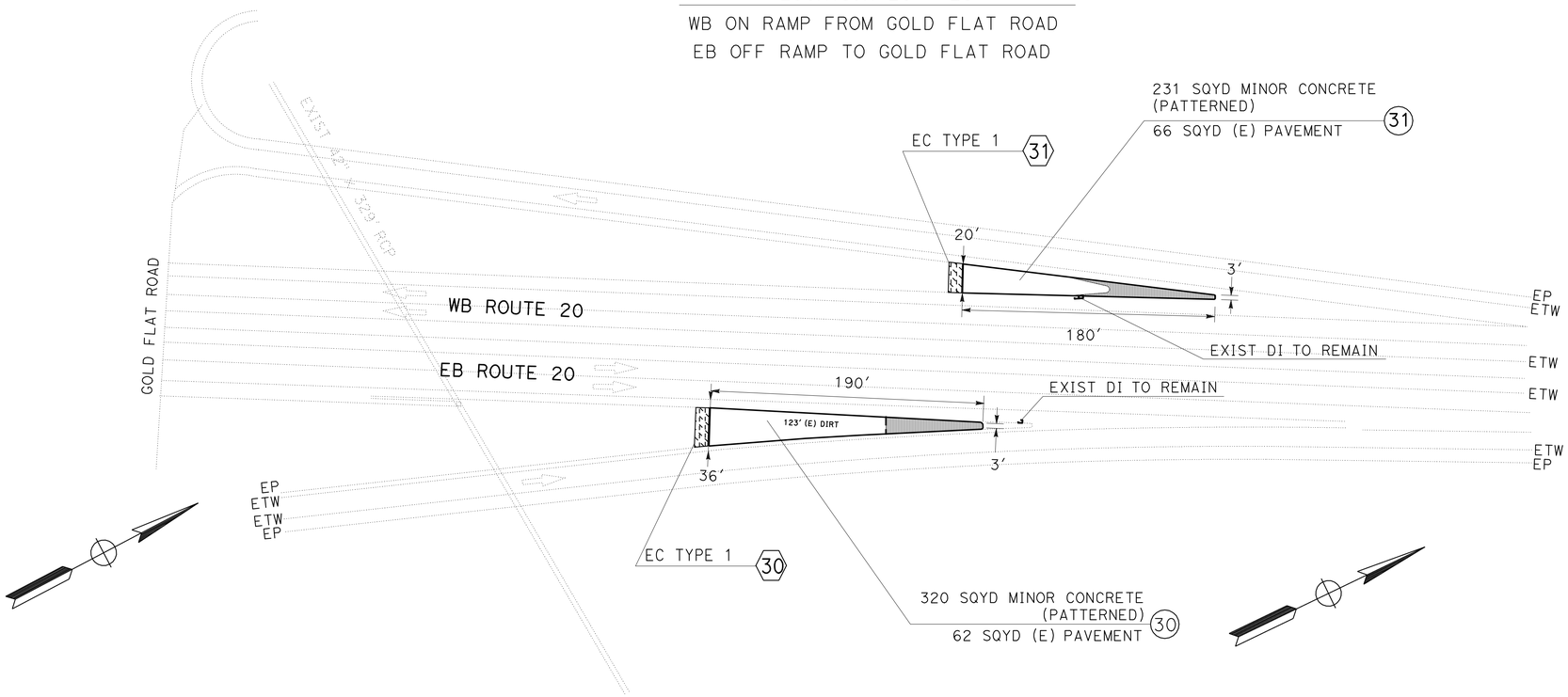

LOCATION 30 - 31

WB OFF RAMP TO GOLD FLAT ROAD
EB ON RAMP FROM GOLD FLAT ROAD

LANDSCAPE DETAILS

NO SCALE

LD-7

STATE OF CALIFORNIA - DEPARTMENT OF TRANSPORTATION
Caltrans®
LANDSCAPE ARCHITECTURE

SENIOR LANDSCAPE ARCHITECT: T. CHRIS JOHNSON
CALCULATED-DESIGNED BY: J. PIETRZAK
CHECKED BY
REVISED BY
DATE REVISED

LAST REVISION 00-00-00
DATE PLOTTED => 30-AUG-2012
TIME PLOTTED => 09:10

Dist	COUNTY	ROUTE	POST MILES TOTAL PROJECT	SHEET No.	TOTAL SHEETS
03	Nev	20	R4.1/R17.4	62	106

6-4-12
LICENSED LANDSCAPE ARCHITECT

6-4-12
PLANS APPROVAL DATE

LICENSED LANDSCAPE ARCHITECT
JEFFREY L. PIETRZAK
No. 4457
Signature
12-31-13
Renewal Date
Date
STATE OF CALIFORNIA

THE STATE OF CALIFORNIA OR ITS OFFICERS OR AGENTS SHALL NOT BE RESPONSIBLE FOR THE ACCURACY OR COMPLETENESS OF SCANNED COPIES OF THIS PLAN SHEET.

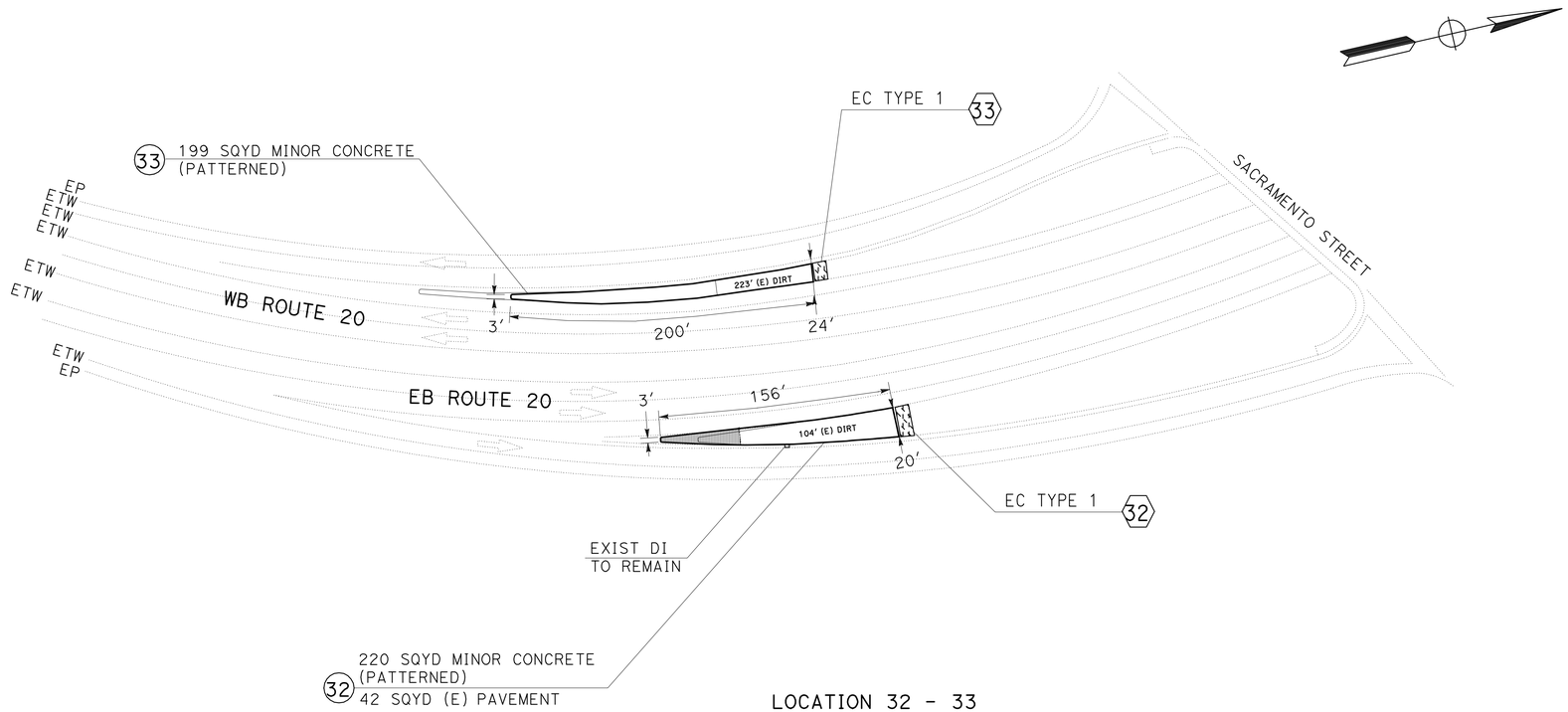

LOCATION 32 - 33

WB ON RAMP FROM SACRAMENTO STREET
EB OFF RAMP TO SACRAMENTO STREET

LANDSCAPE DETAILS

NO SCALE

LD-8

STATE OF CALIFORNIA - DEPARTMENT OF TRANSPORTATION
Caltrans® LANDSCAPE ARCHITECTURE

SENIOR LANDSCAPE ARCHITECT: T. CHRIS JOHNSON

CALCULATED-DESIGNED BY: J. PIETRZAK
CHECKED BY

REVISED BY
DATE REVISED

LAST REVISION 00-00-00
DATE PLOTTED => 30-AUG-2012
TIME PLOTTED => 09:10

Dist	COUNTY	ROUTE	POST MILES TOTAL PROJECT	SHEET No.	TOTAL SHEETS
03	Nev	20	R4.1/R17.4	63	106

6-4-12
LICENSED LANDSCAPE ARCHITECT

6-4-12
PLANS APPROVAL DATE

LICENSED LANDSCAPE ARCHITECT
JEFFREY L. PIETRZAK
No. 4457
Signature
12-31-13
Renewal Date
Date
STATE OF CALIFORNIA

THE STATE OF CALIFORNIA OR ITS OFFICERS OR AGENTS SHALL NOT BE RESPONSIBLE FOR THE ACCURACY OR COMPLETENESS OF SCANNED COPIES OF THIS PLAN SHEET.

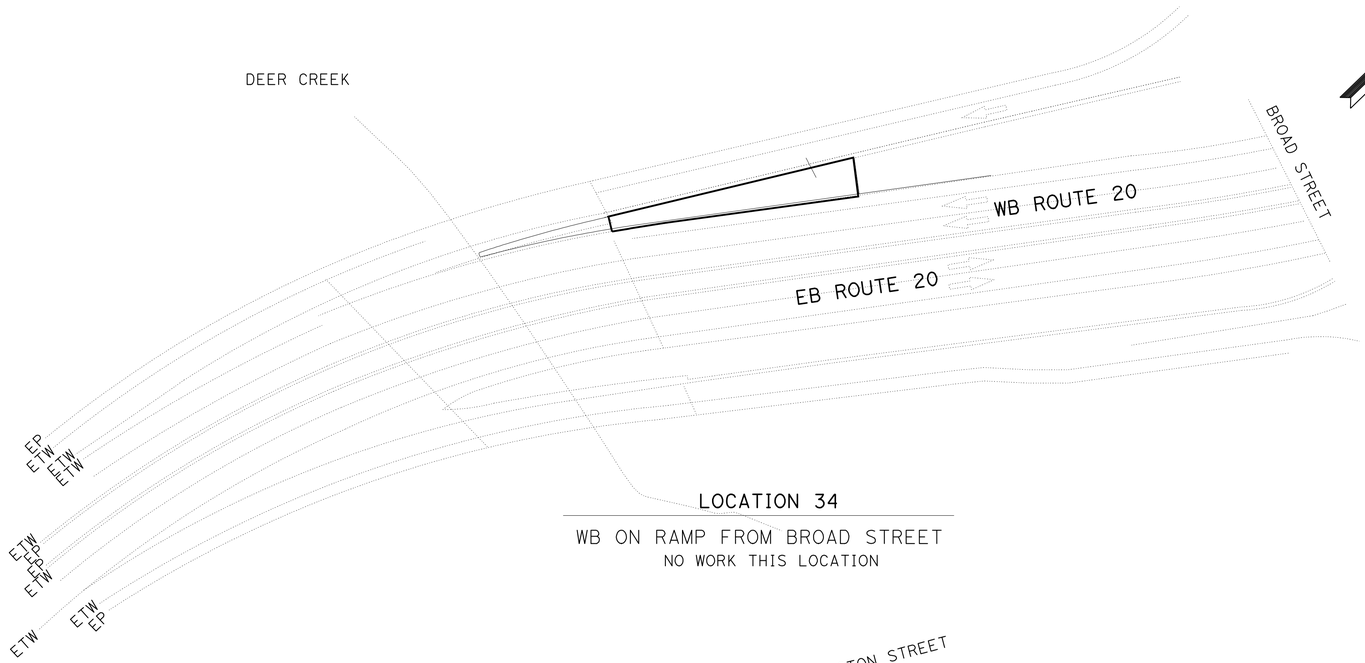

LOCATION 34

WB ON RAMP FROM BROAD STREET

NO WORK THIS LOCATION

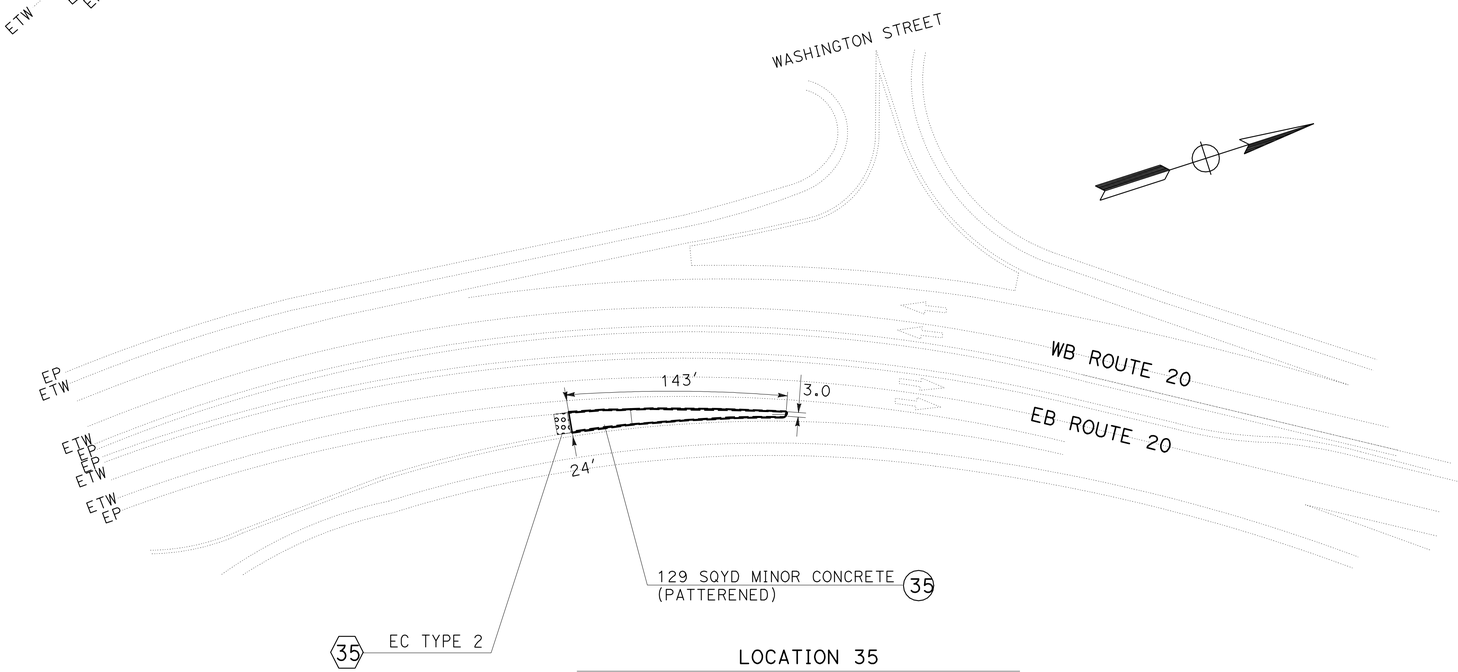

LOCATION 35

EB ON RAMP FROM WASHINGTON STREET

LANDSCAPE DETAILS

NO SCALE

LD-9

STATE OF CALIFORNIA - DEPARTMENT OF TRANSPORTATION
Caltrans®
LANDSCAPE ARCHITECTURE

SENIOR LANDSCAPE ARCHITECT: T. CHRIS JOHNSON

CALCULATED-DESIGNED BY: J. PIETRZAK

CHECKED BY

REVISED BY

DATE REVISED

LAST REVISION 00-00-00

DATE PLOTTED => 30-AUG-2012
TIME PLOTTED => 09:10

Dist	COUNTY	ROUTE	POST MILES TOTAL PROJECT	SHEET No.	TOTAL SHEETS
03	Nev	20	R4.1/R17.4	64	106

6-4-12
LICENSED LANDSCAPE ARCHITECT

6-4-12
PLANS APPROVAL DATE

LICENSED LANDSCAPE ARCHITECT JEFFREY L. PIETRZAK No. 4457 Signature 12-31-13 Renewal Date Date STATE OF CALIFORNIA

THE STATE OF CALIFORNIA OR ITS OFFICERS OR AGENTS SHALL NOT BE RESPONSIBLE FOR THE ACCURACY OR COMPLETENESS OF SCANNED COPIES OF THIS PLAN SHEET.

NOTES:

1. FOR EXACT LOCATION OF SIGN POSTS, SEE SIGN DETAIL SHEET.
2. WHERE SIGN POSTS ARE POSITIONED WITHIN MINOR CONCRETE (PATTERNED) AREAS, USE OPENING FOR SIGN POST DETAIL.
3. SEE DRAINAGE SHEETS FOR LOCATIONS AND QUANTITIES OF DRAINAGE MODIFICATIONS.
4. UNLESS OTHERWISE SHOWN ON THE PLANS, THESE DIMENSIONS MUST BE MAINTAINED FOR THE MINOR CONCRETE (PATTERNED) AT ALL GORE PAVING LOCATIONS.

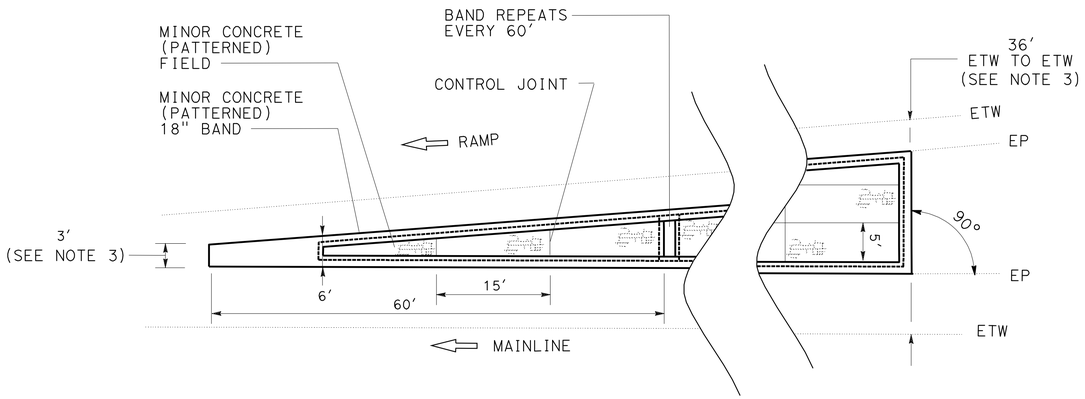

EXTENDED GORE PAVING DETAIL (ENTRANCE RAMP)

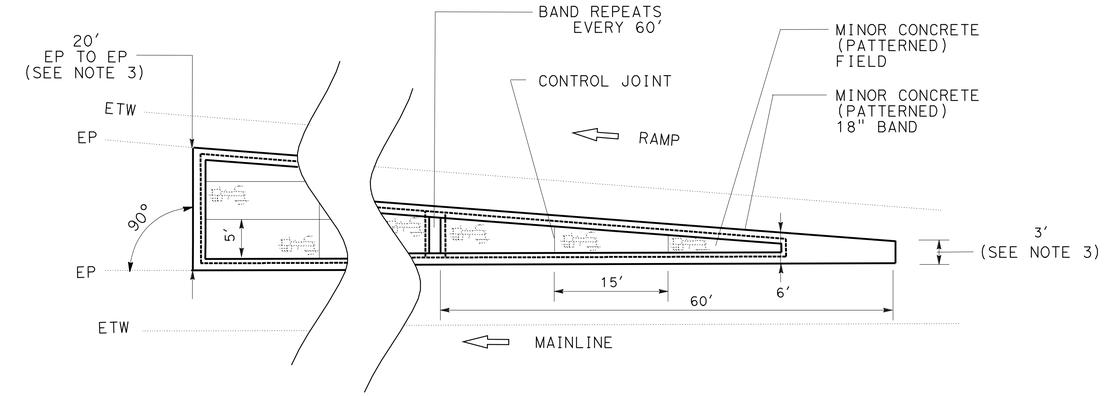

EXTENDED GORE PAVING DETAIL (EXIT RAMP)

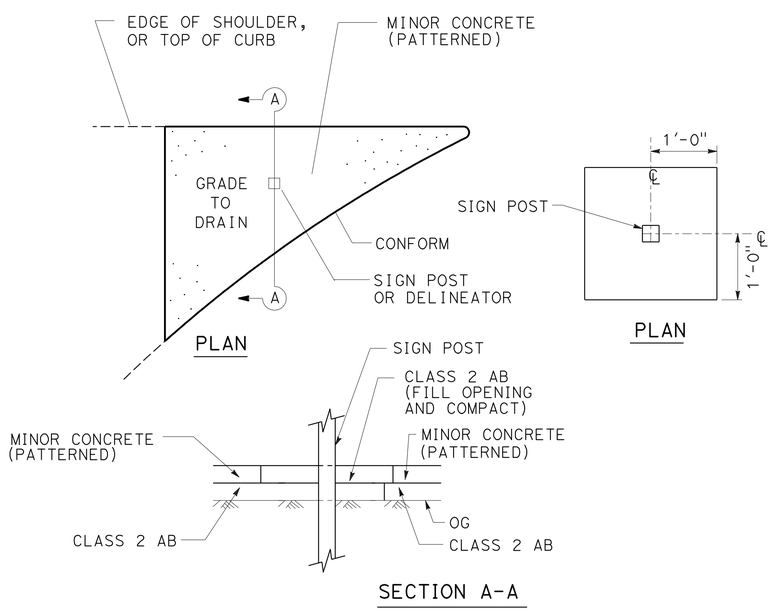

OPENING FOR SIGN POST MINOR CONCRETE (PATTERNED)

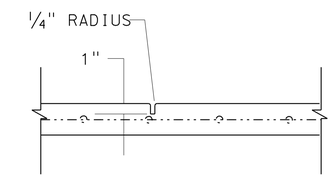

CONTROL JOINT

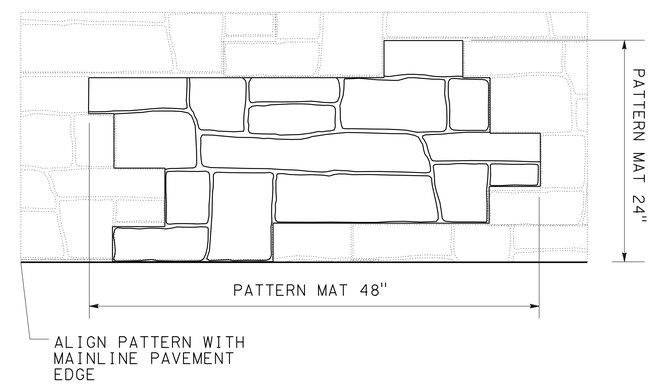

MINOR CONCRETE (PATTERNED) FIELD DETAIL

LANDSCAPE DETAILS

NO SCALE

LD-10

STATE OF CALIFORNIA - DEPARTMENT OF TRANSPORTATION
Caltrans
LANDSCAPE ARCHITECTURE
SENIOR LANDSCAPE ARCHITECT T. CHRIS JOHNSON
CALCULATED-DESIGNED BY J. PIETRZAK
CHECKED BY
REVISED BY
DATE REVISED

LAST REVISION 00-00-00 DATE PLOTTED => 30-AUG-2012 TIME PLOTTED => 09:10

Dist	COUNTY	ROUTE	POST MILES TOTAL PROJECT	SHEET No.	TOTAL SHEETS
03	Nev	20	R4.1/R17.4	65	106

6-4-12
LICENSED LANDSCAPE ARCHITECT

6-4-12
PLANS APPROVAL DATE

LICENSED LANDSCAPE ARCHITECT
JEFFREY L. PIETRZAK
No. 4457
Signature
12-31-13
Renewal Date
Date
STATE OF CALIFORNIA

THE STATE OF CALIFORNIA OR ITS OFFICERS OR AGENTS SHALL NOT BE RESPONSIBLE FOR THE ACCURACY OR COMPLETENESS OF SCANNED COPIES OF THIS PLAN SHEET.

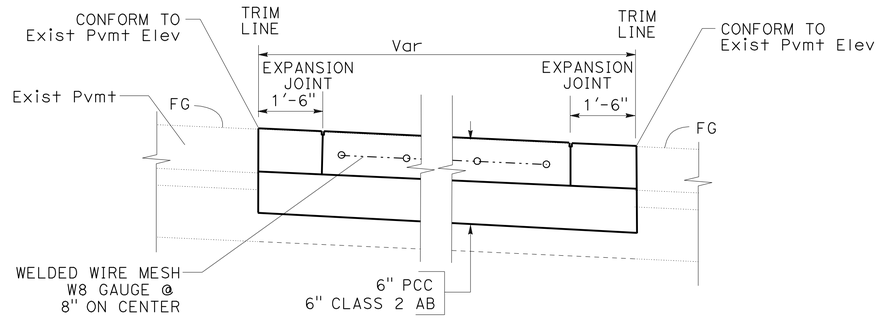

TYPICAL SECTION

MINOR CONCRETE (PATTERNED)
IN EXISTING PAVEMENT CONDITION

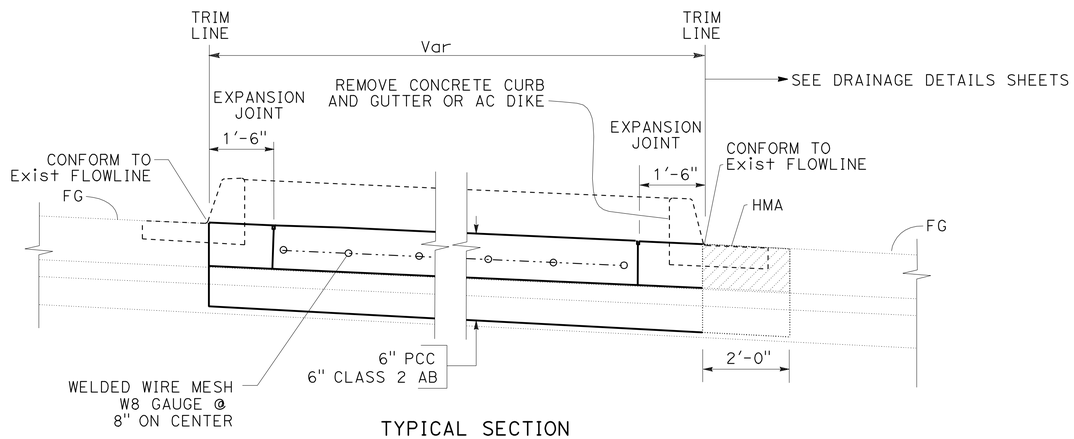

TYPICAL SECTION

MINOR CONCRETE (PATTERNED)
WHERE EXISTING CURB TO BE REMOVED

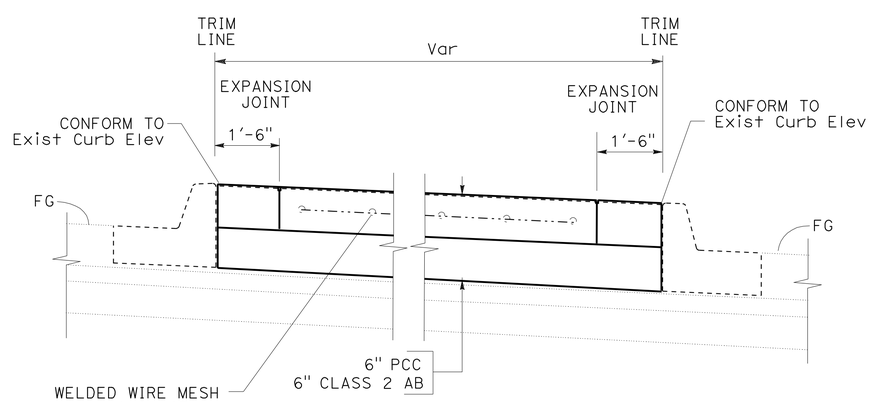

TYPICAL SECTION

MINOR CONCRETE (PATTERNED)
WHERE EXISTING CURB TO REMAIN

LANDSCAPE DETAILS

NO SCALE

LD-11

STATE OF CALIFORNIA - DEPARTMENT OF TRANSPORTATION
Caltrans®
LANDSCAPE ARCHITECTURE

SENIOR LANDSCAPE ARCHITECT: T. CHRIS JOHNSON

CALCULATED-DESIGNED BY: J. PIETRZAK
CHECKED BY

REVISED BY
DATE REVISED

LAST REVISION 00-00-00
DATE PLOTTED => 30-AUG-2012
TIME PLOTTED => 09:10

Dist	COUNTY	ROUTE	POST MILES TOTAL PROJECT	SHEET No.	TOTAL SHEETS
03	Nev	20	R4.1/R17.4	66	106

6-4-12
LICENSED LANDSCAPE ARCHITECT

6-4-12
PLANS APPROVAL DATE

LICENSED LANDSCAPE ARCHITECT JEFFREY L. PIETRZAK No. 4457 Signature 12-31-13 Renewal Date Date STATE OF CALIFORNIA

THE STATE OF CALIFORNIA OR ITS OFFICERS OR AGENTS SHALL NOT BE RESPONSIBLE FOR THE ACCURACY OR COMPLETENESS OF SCANNED COPIES OF THIS PLAN SHEET.

REMOVE IRRIGATION FACILITY

LOCATION	TYPE	DIRECTION	RAMP	TO/FROM	LOCAL ROAD	NOTES	(N) REMOVE SPRINKLER	(N) REMOVE VALVE	(N) CAP PIPE
7	GORE	EB	ON	FROM	20/49 SEPARATION	EXISTING 1-1/2" MAIN	18	1	4
8	GORE	WB	OFF	TO	20/49 SEPARATION	EXISTING 1-1/2" MAIN	12	1	3
9	GORE	EB	OFF	TO	SOUTH AUBURN STREET	EXISTING 1-1/2" MAIN	22	1	2
10	GORE	WB	ON	FROM	SOUTH AUBURN STREET	EXISTING 2" MAIN	50	2	3
11	GORE	EB	ON	FROM	BENNETT STREET	EXISTING 1-1/4" MAIN	35	1	5
12	GORE	WB	OFF	TO	BENNETT STREET	EXISTING 2-1/2" MAIN	84	3	1
14	GORE	WB	OFF	TO	IDAHO MARYLAND ROAD	EXISTING 3" MAIN	42	2	2
15	GORE	WB	ON	FROM	IDAHO MARYLAND ROAD	EXISTING 1-1/2" MAIN	16	2	2
16	GORE	EB	OFF	TO	IDAHO MARYLAND ROAD	EXISTING 1-1/2" MAIN	17	1	1
17	GORE	EB	ON	FROM	IDAHO MARYLAND ROAD	EXISTING 1-1/2" MAIN	17	1	1
35	GORE	EB	ON	FROM	WASHINGTON STREET	EXISTING 2" MAIN	22	1	1
						SUBTOTAL	339	16	27

(N) NOT A PAY ITEM, INFORMATION ONLY.

IMPORTED TOPSOIL

LOCATION						
COUNTY	ROUTE	PM	STREET/ RAMP	SHEET #	ASSOCIATED WITH	CY
Nev	20		EB MCCOURTNEY ROAD OFF RAMP	LD-1	ROAD EDGE	22
Nev	20	12.1	WB ONRAMP FROM MILL ST	C-1	ADA CURB RAMP #1	1
Nev	20	12.3	EB 20/49 AT 20/40 Sep	C-3	ADA CURB RAMP #3	1
Nev	20/49	12.8	S AUBURN St	C-4	ADA CURB RAMP #4	1
Nev	20/49	12.8	S AUBURN St	C-4	ADA CURB RAMP #5	1
Nev	20/49	12.8	S AUBURN St	C-4	ADA CURB RAMP #7	1
					TOTAL	27

EROSION CONTROL (COMPOST BLANKET)

EROSION CONTROL LOCATION NUMBER	EC TYPE	EC (COMPOST BLANKET) CY	EROSION CONTROL LOCATION	ASSOCIATED WITH	EC TYPE	EC (COMPOST BLANKET) 5' WIDE CY
1	1	2	PM R12.12 TO PM R12.14	DIKE	1	4
2	1	3	PM R15.96 TO PM R16.02	DIKE	1	11
3	1	2	PM R16.34 TO PM R16.57	DIKE	1	41
4	1	1	PM R16.47 TO PM R16.65	DIKE	1	36
4B	1	23	PM R16.05 TO PM R16.18	DIKE	1	23
5	1	2	PM R14.60 TO PM R14.67	DIKE	1	13
6	1	3	ADA CURB RAMP #1	CURB RAMP	2	1
7	2	1	ADA CURB RAMP #3	CURB RAMP	2	1
8	2	1	ADA CURB RAMP #4	CURB RAMP	2	1
9	2	1	ADA CURB RAMP #5	CURB RAMP	2	1
10	2	1	ADA CURB RAMP #7	CURB RAMP	2	1
11	2	1				
12	2	1				
13	2	-				
14	2	2				
15	2	2				
16	2	1				
17	2	2				
18	1	1				
19	1	1				
20	1	1				
21	1	2				
22	1	-				
23	1	3				
24	1	1				
25	1	1				
25B	1	1				
26	1	2				
27	1	2				
28	1	1				
29	1	1				
30	1	2				
31	1	1				
32	1	1				
33	1	1				
34	-	-				
35	2	1				
36	-	-				
37	-	-				
38	1	4				
					TOTAL	207

MINOR CONCRETE (PATTERNED)

LOCATION	TYPE	DIRECTION	RAMP	TO/FROM	LOCAL ROAD	EXCAVATED SELECTED MATERIAL AND TOPSOIL (N) EXCAVATED SELECTED MATERIAL AND TOPSOIL CY	PAVEMENT AND BASE CY	NON-ADL TOPSOIL CY	MINOR CONCRETE (PATTERENED) SQYD
1	GORE	WB	ON	FROM	MILL STREET	26.7	2.2	24.5	81
2	GORE	WB	ON	FROM	MILL STREET	37.0	0.3	36.7	112
3	GORE	WB	OFF	TO	MILL STREET	15.2	6.6	8.6	46
4	GORE	EB	OFF	TO	MCCOURTNEY ROAD	81.5	13.9	67.6	247
5	GORE	EB	ON	FROM	MCCOURTNEY ROAD	14.5	0.2	14.3	44
6	GORE	EB	ON	FROM	MCCOURTNEY ROAD	24.8	0.2	24.6	75
7	GORE	EB	ON	FROM	20/49 SEPARATION	94.4	20.7	73.7	286
8	GORE	WB	OFF	TO	20/49 SEPARATION	114.2	11.8	102.4	346
9	GORE	EB	OFF	TO	SOUTH AUBURN STREET	75.9	11.5	64.4	230
10	GORE	WB	ON	FROM	SOUTH AUBURN STREET	56.8	-	56.8	172
11	GORE	EB	ON	FROM	BENNETT STREET	100.0	8.4	91.6	303
12	GORE	WB	OFF	TO	BENNETT STREET	132.7	6.9	125.8	402
13	GORE	WB	ON	FROM	IDAHO MARYLAND ROAD	-	-	-	-
14	GORE	WB	OFF	TO	IDAHO MARYLAND ROAD	301.3	10.6	290.7	913
15	GORE	WB	ON	FROM	IDAHO MARYLAND ROAD	28.4	-	28.4	86
16	GORE	EB	OFF	TO	IDAHO MARYLAND ROAD	75.2	11.8	63.4	228
17	GORE	EB	ON	FROM	IDAHO MARYLAND ROAD	117.2	17.8	99.4	355
18	GORE	WB	ON	FROM	BRUNSWICK ROAD	28.7	5.7	23.0	87
19	GORE	EB	OFF	TO	BRUNSWICK ROAD	55.4	6.5	48.9	168
20	GORE	EB	ON	FROM	BRUNSWICK ROAD	18.8	2.8	16.0	57
21	NARROW AREA	EB	ON	FROM	BRUNSWICK ROAD	82.2	46.1	36.1	249
22	GORE	EB	ON	FROM	BRUNSWICK ROAD	-	-	-	-
23	GORE	WB	ON	FROM	BRUNSWICK ROAD	40.6	5.1	35.5	123
24	GORE	WB	OFF	TO	BRUNSWICK ROAD	104.0	66.5	37.5	315
25	NARROW AREA	WB	ON	FROM	BRUNSWICK ROAD	69.3	-	69.3	210
26	GORE	WB	ON	FROM	BRUNSWICK ROAD	19.8	-	19.8	60
27	GORE	EB	ON	FROM	BRUNSWICK ROAD	42.6	4.2	38.4	129
28	GORE	EB	OFF	TO	GOLD FLAT ROAD	93.7	36.7	57.0	284
29	GORE	WB	ON	FROM	GOLD FLAT ROAD	23.1	-	23.1	70
30	GORE	EB	ON	FROM	GOLD FLAT ROAD	105.6	14.4	91.2	320
31	GORE	WB	OFF	TO	GOLD FLAT ROAD	76.2	15.4	60.8	231
32	GORE	EB	OFF	TO	SACRAMENTO STREET	72.6	9.9	62.7	220
33	GORE	WB	ON	FROM	SACRAMENTO STREET	65.7	-	65.7	199
34	GORE	WB	ON	FROM	BROAD STREET	-	-	-	-
35	GORE	EB	ON	FROM	WASHINGTON STREET	42.6	-	42.6	129
								TOTAL	6,777

LANDSCAPE DETAILS

LD-12

STATE OF CALIFORNIA - DEPARTMENT OF TRANSPORTATION
LANDSCAPE ARCHITECTURE
Caltrans®
SENIOR LANDSCAPE ARCHITECT T. CHRIS JOHNSON
CALCULATED-DESIGNED BY J. PIETRZAK
CHECKED BY
REVISED BY
DATE REVISED

LAST REVISION 00-00-00
DATE PLOTTED => 30-AUG-2012
TIME PLOTTED => 09:10

Dist	COUNTY	ROUTE	POST MILES TOTAL PROJECT	SHEET No.	TOTAL SHEETS
03	Nev	20	R4.1/R17.4	67	106

6-4-12
LICENSED LANDSCAPE ARCHITECT

6-4-12
PLANS APPROVAL DATE

LICENSED LANDSCAPE ARCHITECT JEFFREY L. PIETRZAK No. 4457 Signature 12-31-13 Renewal Date Date STATE OF CALIFORNIA

THE STATE OF CALIFORNIA OR ITS OFFICERS OR AGENTS SHALL NOT BE RESPONSIBLE FOR THE ACCURACY OR COMPLETENESS OF SCANNED COPIES OF THIS PLAN SHEET.

ABBREVIATIONS

AMEND — amendment
B & B — balled and burlapped
Dia — diameter
EA — each
LB — pound
Oz — ounce
Ft — foot/feet
SQFT — square feet
SQYD — square yard
CF — cubic feet
Max — maximum
Min — minimum
NCN — no common name
No. — number
Pkt — packet
PLT ESTB — plant establishment
Pvmt — pavement
R/W — right of way
SF — state furnished
TRVD — traveled

PLANT LIST AND PLANTING SPECIFICATIONS

PLANT GROUP	PLANT No.	SYMBOL	BOTANICAL NAME	COMMON NAME	SIZE	QUANTITY EACH	HOLE SIZE (INCH) Dia	HOLE SIZE (INCH) DEPTH	BASIN TYPE	RATES PER 1000 SQFT: IRON SULFATE ①	RATES PER 1000 SQFT: SOIL AMEND ①⑦	RATES PER 1000 SQFT: COMMERCIAL FERTILIZER ① TYPE 1 PLANTING	RATES PER 1000 SQFT: COMMERCIAL FERTILIZER ① TYPE 2 PLT ESTB	BASIN MULCH	STAKING	PLANTING LIMITS MINIMUM DISTANCE (Ft) FROM: TRVD WAY	PVMT	FENCE	WALL	PAVED DITCH	EARTH DITCH	ON CENTER (Ft)	REMARKS
E	1		NARCISSUS TAZETTA "GOLDEN DAWN"	GOLDEN DAWN DAFFODIL	BULB	10000	6"	6"	–	½ LB	9.5 CY	8 LB	2 LB	–	–	–	–	–	–	–	–	1′	⑥ YELLOW PETALS DARK GOLD CUP

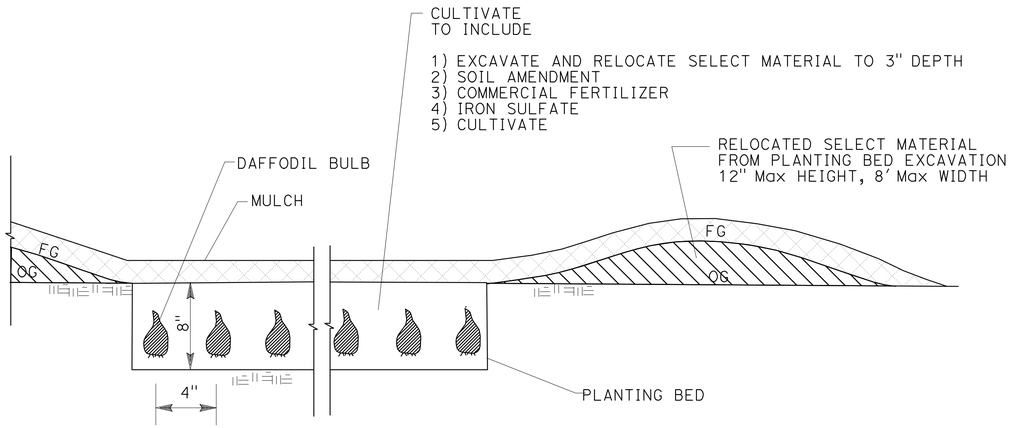

PLANT (GROUP E) PLANTING DETAIL

SECTION

CULTIVATE

SEQUENCE	ITEM	MATERIAL DESCRIPTION	MATERIAL TYPE	APPLICATION RATE	DEPTH
STEP 1	SOIL AMENDMENT	SOIL AMENDMENT	–	9.5 CY / 1000 SQFT	
		SAND	WASHED	3 CY / 1000 SQFT	
STEP 2	IRON SULFATE	–	–	½ LB / 1000 SQFT	
STEP 3	COMMERCIAL FERTILIZER	–	(TYPE 1)	8 LB / 1000 SQFT	
STEP 4	CULTIVATE	–	–	–	8"

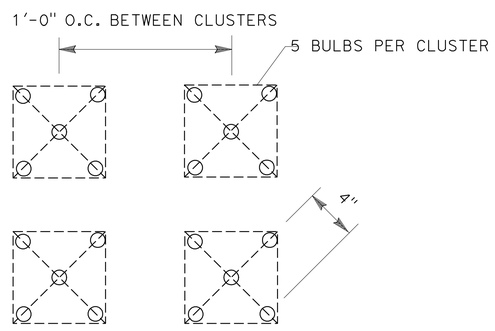

PLANT (GROUP E) SPACING DETAIL

PLAN

APPLICABLE WHEN CIRCLED:

① - Quantities shown are "per plant" unless shown as SQFT or SQYD application rates.
2 - Sufficient to receive root ball.
3 - Does not apply to mulch areas.
4 - As shown on plans.
5 - Unless otherwise shown on plans.
⑥ - See detail.
⑦ - See Special Provisions.

NOTE:
Underlined portions of botanical name indicate abbreviations used on Planting Plans.

PLANT LIST

PL-1

REVISED BY | DATE REVISED
J. PIETRZAK
CALCULATED-DESIGNED BY | CHECKED BY
SENIOR LANDSCAPE ARCHITECT
T. CHRIS JOHNSON
STATE OF CALIFORNIA - DEPARTMENT OF TRANSPORTATION
LANDSCAPE ARCHITECTURE
Caltrans

LAST REVISION 00-00-00
DATE PLOTTED => 30-AUG-2012
TIME PLOTTED => 09:10

Dist	COUNTY	ROUTE	POST MILES TOTAL PROJECT	SHEET No.	TOTAL SHEETS
03	Nev	20	R4.1/R17.4	68	106

Mary Ann Hudspeth 6-4-12
REGISTERED ELECTRICAL ENGINEER DATE

6-4-12
PLANS APPROVAL DATE

REGISTERED PROFESSIONAL ENGINEER MARY ANN HUDSPETH No. 17245 Exp. 6-30-12 ELECTRICAL STATE OF CALIFORNIA

THE STATE OF CALIFORNIA OR ITS OFFICERS OR AGENTS SHALL NOT BE RESPONSIBLE FOR THE ACCURACY OR COMPLETENESS OF SCANNED COPIES OF THIS PLAN SHEET.

NOTE:

FOR ACCURATE RIGHT OF WAY DATA, CONTACT RIGHT OF WAY ENGINEERING AT THE DISTRICT OFFICE.

ABBREVIATIONS:

CTID CALTRANS IDENTIFICATION NUMBER
PG&E PACIFIC GAS AND ELECTRIC COMPANY

PROJECT NOTES (THIS SHEET ONLY):

1. PREFORMED LOOP, SEE "PREFORMED LOOP PULL BOX TERMINATION DETAIL" ON SHEET E-2.
2. RR MODEL 332 CABINET and bbs. SEE "TEMPORARY MODEL 332 CABINET DETAIL" ON SHEET E-2. RS TEMPORARY CABINET UPON COMPLETION OF PROJECT.
3. RC 3#10, 3 dlc, ADD 2#6, 1#6G, 2 DLC
4. RC 3#10, 4 dlc, ADD 2#6, 1#6G, 3 DLC
5. RC pb
6. INSTALL VIDEO IMAGE VEHICLE DETECTOR CAMERA PER DETAIL "SIGNAL POLE MOUNT FOR EXISTING TRAFFIC SIGNAL STRUCTURES" ON SHEET SES-1.

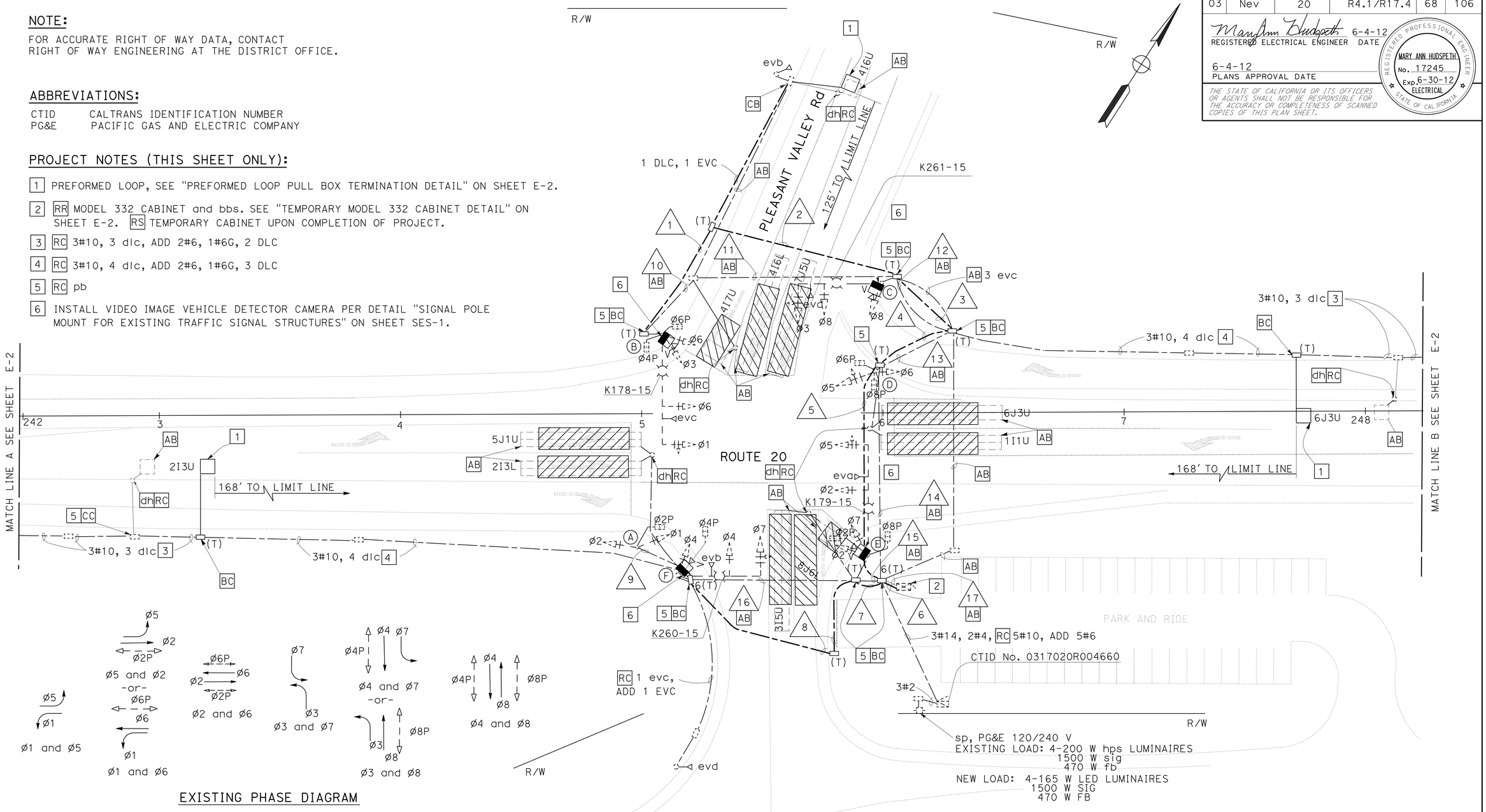

EXISTING PHASE DIAGRAM

EMERGENCY VEHICLE PRE-EMPTION

eva - ø2, ø5
evb - ø4, ø7
evc - ø1, ø6
evd - ø8, ø3

MODIFY SIGNAL AND LIGHTING
PLEASANT VALLEY ROAD

SCALE: 1" = 20'

APPROVED FOR ELECTRICAL WORK ONLY

E-1

STATE OF CALIFORNIA - DEPARTMENT OF TRANSPORTATION
Caltrans ELECTRICAL DESIGN
FUNCTIONAL SUPERVISOR: STEVEN BLOCK
CALCULATED-DESIGNED BY: ZAHRA NIKNAFS
CHECKED BY: MARY ANN HUDSPETH
REVISED BY / DATE REVISED

DATE PLOTTED => 30-AUG-2012
TIME PLOTTED => 09:10
LAST REVISION

Dist	COUNTY	ROUTE	POST MILES TOTAL PROJECT	SHEET No.	TOTAL SHEETS
03	Nev	20	R4.1/R17.4	69	106

REGISTERED ELECTRICAL ENGINEER 6-4-12 DATE

6-4-12
PLANS APPROVAL DATE

REGISTERED PROFESSIONAL ENGINEER MARY ANN HUDSPETH No. 17245 Exp. 6-30-12 ELECTRICAL STATE OF CALIFORNIA

THE STATE OF CALIFORNIA OR ITS OFFICERS OR AGENTS SHALL NOT BE RESPONSIBLE FOR THE ACCURACY OR COMPLETENESS OF SCANNED COPIES OF THIS PLAN SHEET.

NOTE:

FOR ACCURATE RIGHT OF WAY DATA, CONTACT RIGHT OF WAY ENGINEERING AT THE DISTRICT OFFICE.

PROJECT NOTES (THIS SHEET ONLY):

1. PREFORMED LOOP, SEE "PREFORMED LOOP PULL BOX TERMINATION DETAIL" ON THIS SHEET.
2. RC 3#10, 3 dlc, ADD 2#6, 1#6G, 1 DLC
3. RC 3#10, 3 dlc, ADD 2#6, 1#6G, 2 DLC
4. INSTALL 5 A FUSED SPLICE CONNECTORS ON ALL CONDUCTORS. SEE STANDARD PLAN ES-13B FOR KINKING DETAIL.
5. RC pb, CC

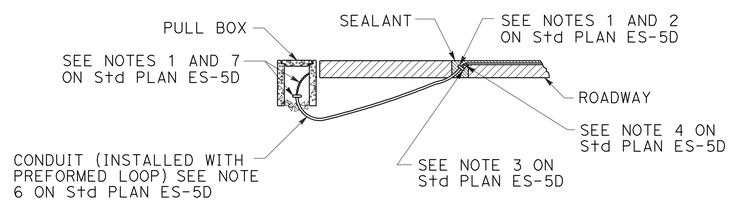

PREFORMED LOOP PULL BOX TERMINATION DETAIL

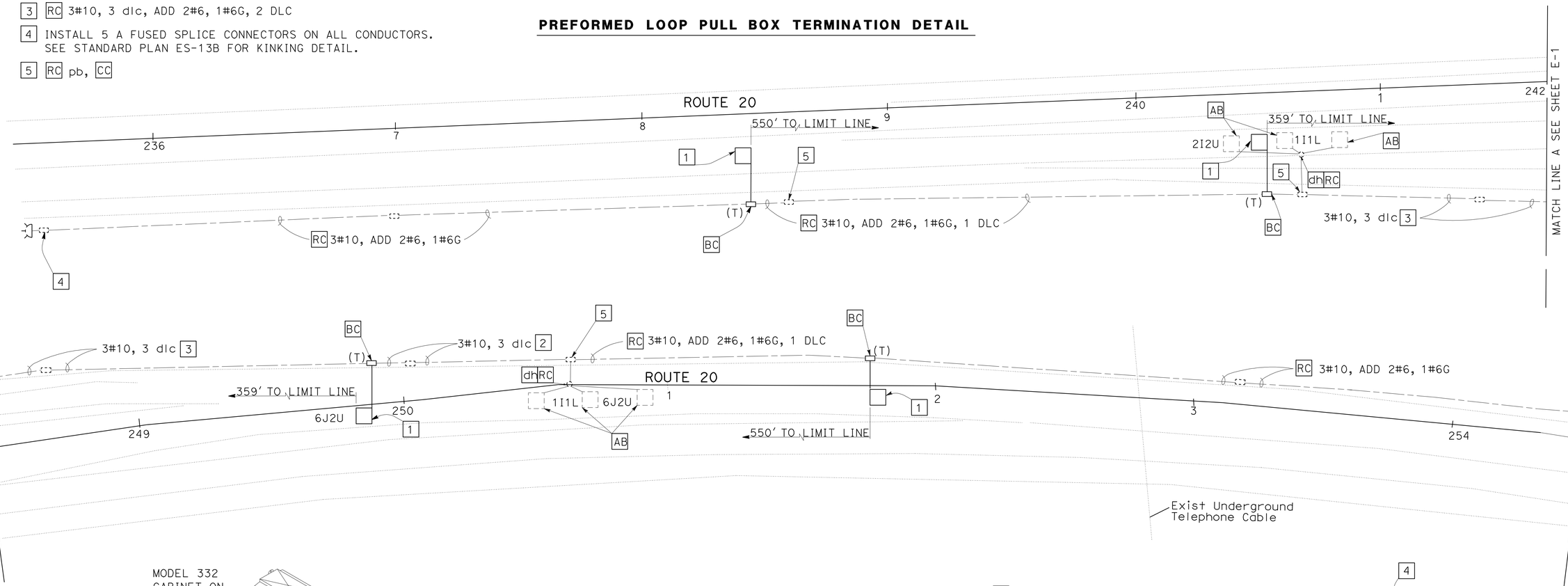

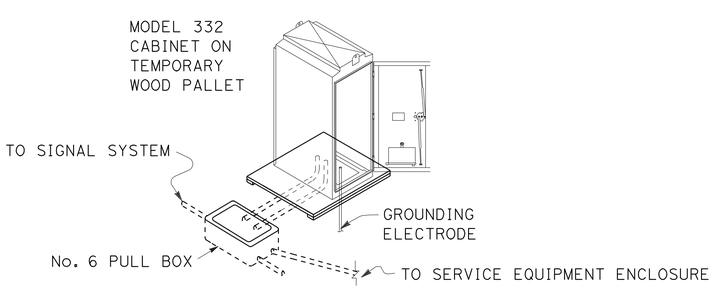

TEMPORARY MODEL 332 CABINET DETAIL

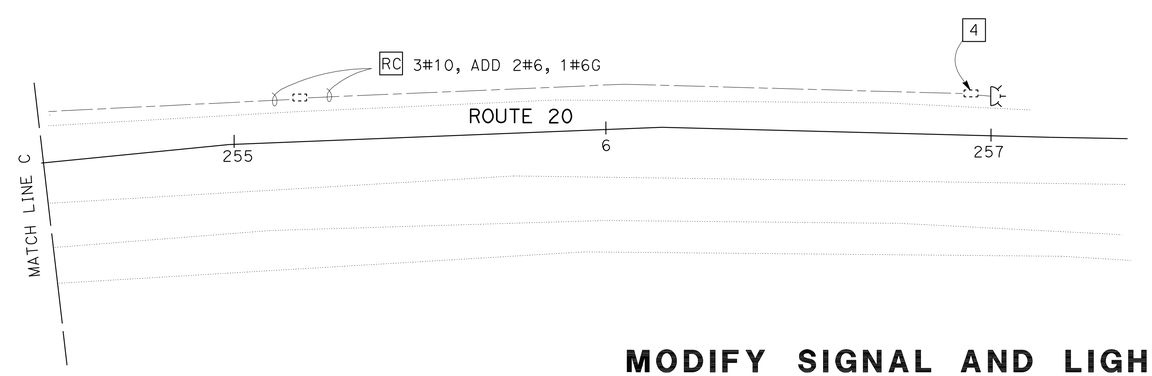

MODIFY SIGNAL AND LIGHTING
PLEASANT VALLEY ROAD

SCALE: 1" = 20'

APPROVED FOR ELECTRICAL WORK ONLY

E-2

STATE OF CALIFORNIA - DEPARTMENT OF TRANSPORTATION
Caltrans® ELECTRICAL DESIGN

FUNCTIONAL SUPERVISOR: STEVEN BLOCK
CALCULATED-DESIGNED BY: ZAHRA NIKNAFS
CHECKED BY: MARY ANN HUDSPETH
REVISED BY / DATE REVISED

LAST REVISION / DATE PLOTTED => 30-AUG-2012 / TIME PLOTTED => 09:10

Dist	COUNTY	ROUTE	POST MILES TOTAL PROJECT	SHEET No.	TOTAL SHEETS
03	Nev	20	R4.1/R17.4	70	106

REGISTERED ELECTRICAL ENGINEER 6-4-12 DATE

6-4-12
PLANS APPROVAL DATE

REGISTERED PROFESSIONAL ENGINEER MARY ANN HUDSPETH No. 17245 Exp. 6-30-12 ELECTRICAL STATE OF CALIFORNIA

THE STATE OF CALIFORNIA OR ITS OFFICERS OR AGENTS SHALL NOT BE RESPONSIBLE FOR THE ACCURACY OR COMPLETENESS OF SCANNED COPIES OF THIS PLAN SHEET.

EXISTING CONDUIT AND CONDUCTOR SCHEDULE

CONDUCTOR		CONDUIT RUN							
TYPE	DESIGNATION	10*	11*	12*	13*	14*	15*	16*	17*
14 AWG	ø1	3	3	3	3	3	3	3	6
	ø2						6	3	6
	ø3	3	3	3	3	3			3
	ø4						3	3	3
	ø5					3	3		6
	ø6	3	3	3	3	3			3
	ø7						3	3	3
	ø8			3	3	3			3
	ø2P						4	2	4
	ø4P	2	2	2	2	2	2	2	4
	ø6P	2	2	2	2	2			2
	ø8P					2	2		4
	ø2PPB						2	1	2
	ø4PPB	1	1	1	1	1	1	1	2
	ø6PPB	1	1	1	1	1			1
	ø8PPB					1	1		2
	PPB NEUTRAL	1	1	1	1	1	1	1	2
	PEC								3
	SPARES	3	3	3	3	3	3	3	3
	TOTAL	19	19	22	22	28	39	21	59
10 AWG	SIGNAL NEUTRAL	1	1	1	1	1	1	1	2
	LUMINAIRES	2	2	2	2	2	2	2	
	FLASHING BEACON						3	3	
	TOTAL	3	3	3	3	3	6	6	2
DLC	ø1					1			1
	ø2						5	5	5
	ø4		3	3	3	3			3
	ø5						1	1	1
	ø6				1	5			1
	ø7						2		2
	TOTAL		3	3	3	5	8	6	17
EVC	eva						1	1	
	evb		1				1	1	2
	evc	1	1						1
	evd						1	1	2
	TOTAL	1	2				3	3	5
CONDUIT SIZE		1½"	1½"	1½"	2"	2"	3"	3"	2"-3"

* AB CONDUIT RUN.

CONDUCTOR AND CONDUIT SCHEDULE

CABLE SCHEDULE				CONDUIT RUN								
CONDUCTOR	Std	PHASE VEH-PED	PPB	1	2	3	4	5	6	7	8	9 ****
12CSC	Ⓐ	1,2,2P	2						1 1	1 1	1 1	1 1
	Ⓑ	1,3,6,4P,6P	4,6	2 1	2 1	2 1	2 1	2 1	2 1			
	Ⓒ	3,8				1	1	1	1			
	Ⓓ	5,6,6P,8P	6,8					1 1	1 1			
	Ⓔ	2,5,7,2P,8P	2,8						1 1	1 1		
3CSC	Ⓕ	4,7,4P	4						1 1	1 1	1 1	
	TOTAL CABLES			2 1	2 1	3 1	3 1	4 2	8 5	4 3	2 2	1 1
10 AWG	LUMINAIRES			2	2	2	2	2		2	2	
6 AWG	FLASHING BEACON						3	3		3	3	
DLC	ø2								3	3	3	
	ø4				1	1	1	1	1			
	ø6						4	4	4			
	TOTAL				1	1	5	5	8	3	3	
VIVDS CABLE				1	1	2	2	2	4	2	1	
EVC	eva									1	1	
	evb				1	1	1	1	2	1	1	
	evc			1	1	1	1	1	1			
	evd								2	1	1	
	TOTAL			1	2				5	3	3	
CONDUIT SIZE				3"	3"	4"	1-3" 1-1½"	1-3" 1-2½"	2-4"	4"	3"	2"

**** EXISTING CONDUIT RUN

MODIFIED POLE AND EQUIPMENT SCHEDULE

No.	STANDARD TYPE	SMA	LMA	VEH SIG MTG Ø	MTG	PED SIGNAL Ø	MTG	PPB Ø	ARROW	LED LUMINAIRE	SPECIAL REQUIREMENTS
Ⓐ	1-B			1 2	TV-2-T	2	SP-1-T	4	→		***
Ⓑ	26-4-80	45	15	1 6 3 6	MAS SV-2-TD	4 6	SP-2-T	4 6	← →	165 W **	***
Ⓒ	24-4-80	35	15	3 8 8	MAS SV-1-T					165 W **	
Ⓓ	1-B			5 6	TV-2-T	6 8	SP-2-T	6 8	← →		***
Ⓔ	26-4-80	45	15	2 5 2 7	MAS SV-2-TD	2 8	SP-2-T	2 8	→ ←	165 W **	
Ⓕ	24-3-80	35	15	4 7 4	MAS SV-1-T	4	SP-1-T	2	←	165 W **	

** RC hps LUMINAIRE. INSTALL PER SCHEDULE.

*** RC ppb, INSTALL PPB

MODIFY SIGNAL AND LIGHTING
PLEASANT VALLEY ROAD
NO SCALE

E-3

APPROVED FOR ELECTRICAL WORK ONLY

STATE OF CALIFORNIA - DEPARTMENT OF TRANSPORTATION
Caltrans® ELECTRICAL DESIGN

FUNCTIONAL SUPERVISOR: STEVEN BLOCK
CALCULATED-DESIGNED BY: ZAHRA NIKNAFS
CHECKED BY: MARY ANN HUDSPETH
REVISED BY / DATE REVISED

LAST REVISION / DATE PLOTTED => 30-AUG-2012 / TIME PLOTTED => 09:10

Dist	COUNTY	ROUTE	POST MILES TOTAL PROJECT	SHEET No.	TOTAL SHEETS
03	Nev	20	R4.1/R17.4	71	106

REGISTERED ELECTRICAL ENGINEER 6-4-12 DATE

6-4-12
PLANS APPROVAL DATE

REGISTERED PROFESSIONAL ENGINEER MARY ANN HUDSPETH No. 17245 Exp. 6-30-12 ELECTRICAL STATE OF CALIFORNIA

THE STATE OF CALIFORNIA OR ITS OFFICERS OR AGENTS SHALL NOT BE RESPONSIBLE FOR THE ACCURACY OR COMPLETENESS OF SCANNED COPIES OF THIS PLAN SHEET.

NOTE:

FOR ACCURATE RIGHT OF WAY DATA, CONTACT RIGHT OF WAY ENGINEERING AT THE DISTRICT OFFICE.

PROJECT NOTES (THIS SHEET ONLY):

1. PREFORMED LOOP, SEE PB TERMINATION DETAIL ON SHEET E-2.
2. VIVDS CABLE FOR PHASE 4 SHALL BE COILED INSIDE THE SIGNAL STANDARD. SEE SCHEDULE ON SHEET E-7.
3. INSTALL VIDEO IMAGE VEHICLE DETECTOR CAMERA PER DETAIL "SIGNAL POLE MOUNT FOR EXISTING TRAFFIC SIGNAL STRUCTURES" ON SHEET SES-2.

EXISTING PHASE DIAGRAM

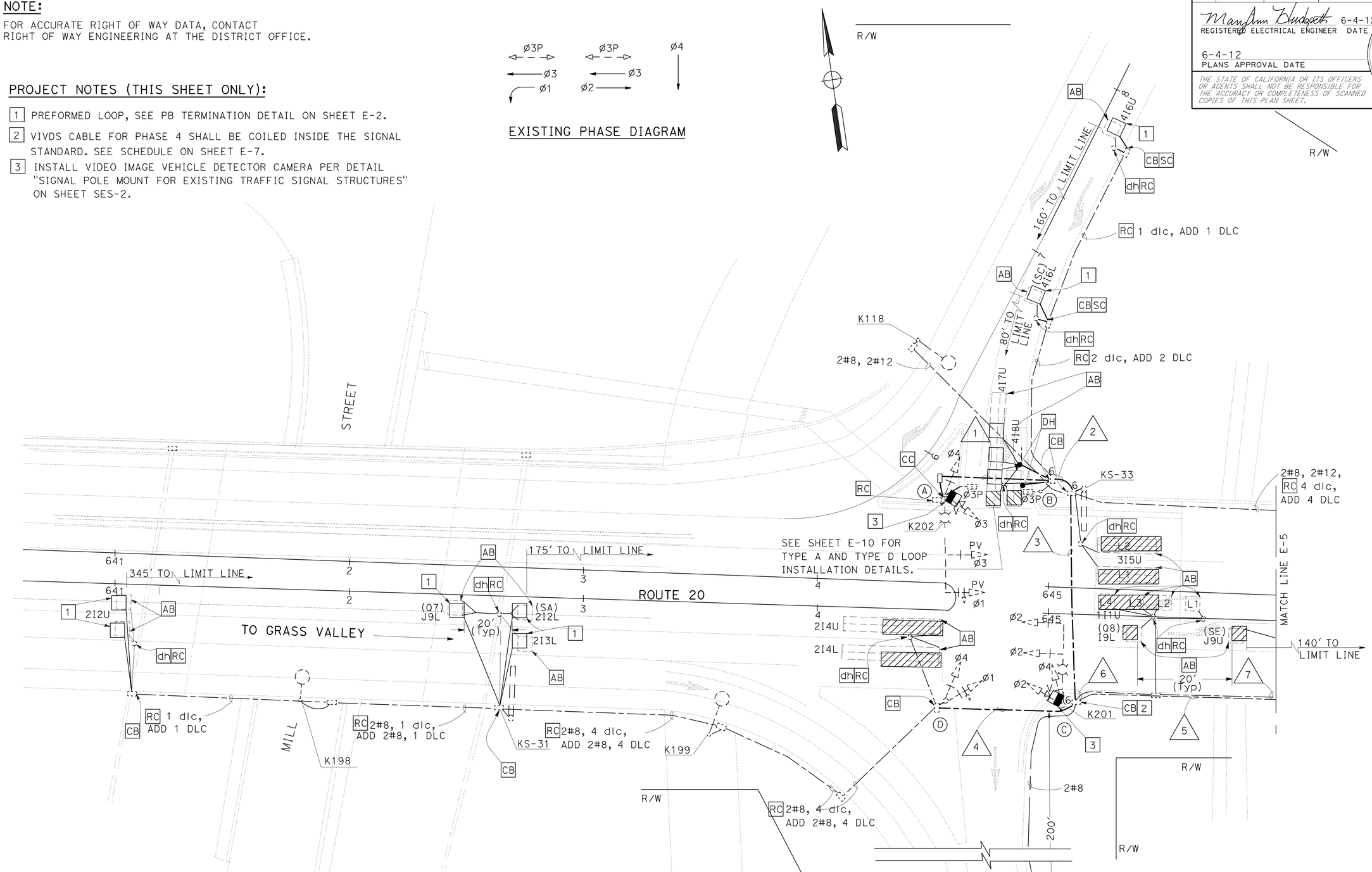

MODIFY SIGNAL AND LIGHTING
ROUTE 20/49 SEPARATION
RAMP A

SCALE: 1" = 20'

E-4

APPROVED FOR ELECTRICAL WORK ONLY

STATE OF CALIFORNIA - DEPARTMENT OF TRANSPORTATION
Caltrans® ELECTRICAL DESIGN

FUNCTIONAL SUPERVISOR: STEVEN BLOCK
CALCULATED-DESIGNED BY: ZAHRA NIKNAFS
CHECKED BY: MARY ANN HUDSPETH
REVISED BY
DATE REVISED

LAST REVISION
DATE PLOTTED => 30-AUG-2012
TIME PLOTTED => 09:10

Dist	COUNTY	ROUTE	POST MILES TOTAL PROJECT	SHEET No.	TOTAL SHEETS
03	Nev	20	R4.1/R17.4	72	106

REGISTERED ELECTRICAL ENGINEER 6-4-12 DATE

6-4-12
PLANS APPROVAL DATE

REGISTERED PROFESSIONAL ENGINEER MARY ANN HUDSPETH No. 17245 Exp. 6-30-12 ELECTRICAL STATE OF CALIFORNIA

THE STATE OF CALIFORNIA OR ITS OFFICERS OR AGENTS SHALL NOT BE RESPONSIBLE FOR THE ACCURACY OR COMPLETENESS OF SCANNED COPIES OF THIS PLAN SHEET.

NOTE:

FOR ACCURATE RIGHT OF WAY DATA, CONTACT RIGHT OF WAY ENGINEERING AT THE DISTRICT OFFICE.

PROJECT NOTES (THIS SHEET ONLY):

1. PREFORMED LOOP, SEE STANDARD PLAN ES-5D, CURB TERMINATION DETAIL (TYPE A). NOTES 1, 2, 3, 4 AND 7 APPLY.
2. INSTALL VIDEO IMAGE VEHICLE DETECTOR CAMERA PER DETAIL "SIGNAL POLE MOUNT FOR EXISTING TRAFFIC SIGNAL STRUCTURES" ON SHEET SES-2.

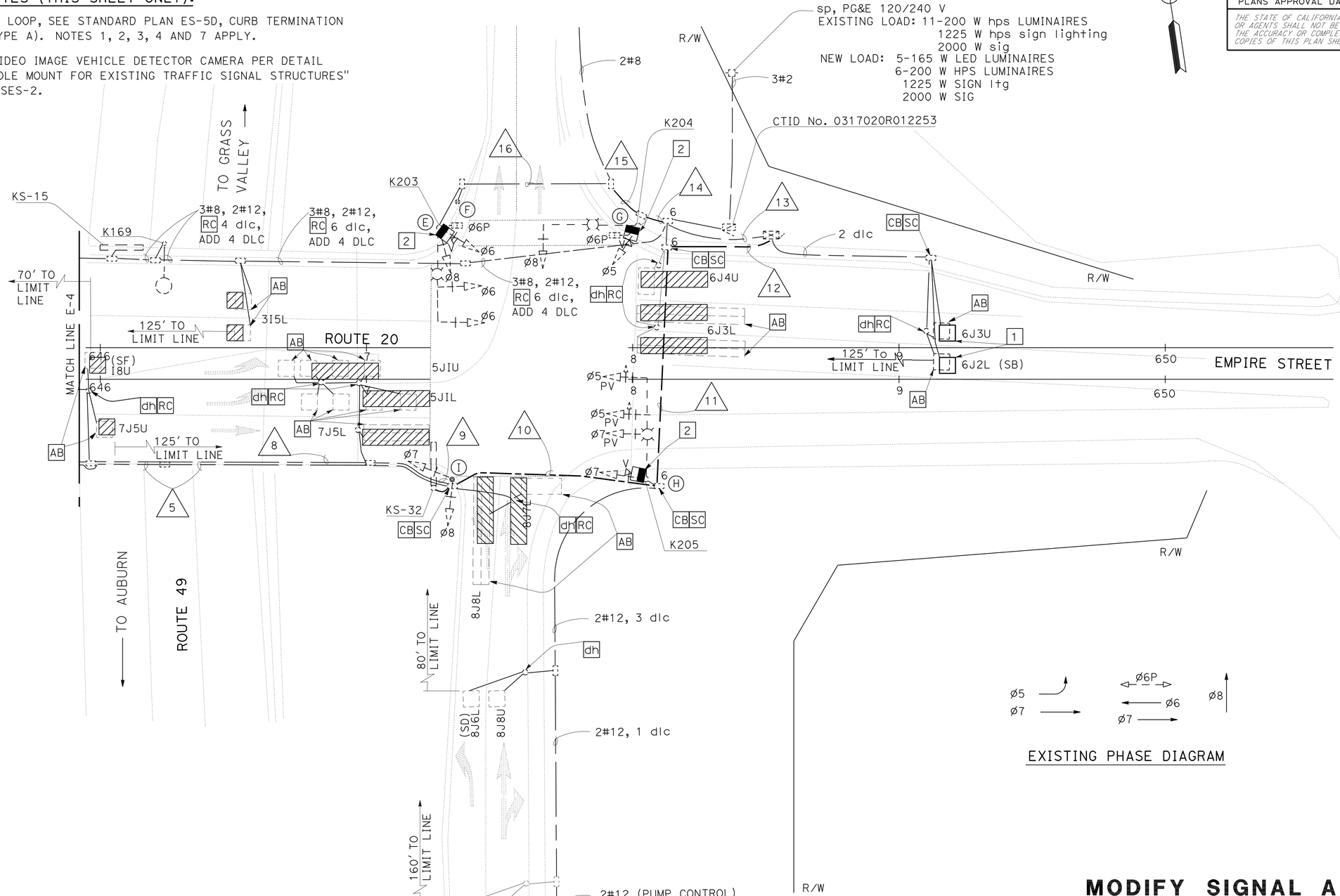

APPROVED FOR ELECTRICAL WORK ONLY

MODIFY SIGNAL AND LIGHTING
ROUTE 20/49 SEPARATION
RAMP B

SCALE: 1" = 20'

E-5

STATE OF CALIFORNIA - DEPARTMENT OF TRANSPORTATION
Caltrans® ELECTRICAL DESIGN

FUNCTIONAL SUPERVISOR: STEVEN BLOCK
CALCULATED-DESIGNED BY: ZAHRA NIKNAFS
CHECKED BY: MARY ANN HUDSPETH
REVISED BY / DATE REVISED

LAST REVISION — DATE PLOTTED => 30-AUG-2012 TIME PLOTTED => 09:10

Dist	COUNTY	ROUTE	POST MILES TOTAL PROJECT	SHEET No.	TOTAL SHEETS
03	Nev	20	R4.1/R17.4	73	106

REGISTERED ELECTRICAL ENGINEER 6-4-12 DATE

6-4-12
PLANS APPROVAL DATE

REGISTERED PROFESSIONAL ENGINEER
MARY ANN HUDSPETH
No. 17245
Exp. 6-30-12
ELECTRICAL
STATE OF CALIFORNIA

THE STATE OF CALIFORNIA OR ITS OFFICERS OR AGENTS SHALL NOT BE RESPONSIBLE FOR THE ACCURACY OR COMPLETENESS OF SCANNED COPIES OF THIS PLAN SHEET.

MODIFIED POLE AND EQUIPMENT SCHEDULE

No.	STANDARDS			VEHICLE SIGNAL		PED SIGNAL		PPB		LED LUMINIARE	NOTES
	TYPE	SMA	LMA	Ø	MTG	Ø	MTG	Ø	ARROW		
(A)	26-3-80	40	6	1 3 3 4	MAS SV-2-TA	3	SP-1	3	→	165 W *	**
(B)	1-B					3	TP-1	3	←		**
(C)	19-3-80	30	15	2 2 2 4	MAS SV-2-TB					165 W *	
(D)	1-B			4 1	TV-2-T						
(E)	24-3-80	35	15	6 6 6 8	MAS SV-2-TB	6	SP-1			165 W *	
(F)	PPB							6	→		**
(G)	24-3-80	35	12	8 5	MAS SV-1-T	6	SP-1	6	←	165 W *	**
(H)	26-4-80	40	12	5 5 7 7	MAS SV-1-T					165 W *	
(I)	1-B			7 8	TV-2-T						

* RC hps LUMINAIRE. INSTALL PER SCHEDULE.

** RC ppb, INSTALL PPB

MODIFY SIGNAL AND LIGHTING
ROUTE 20/49 SEPARATION
RAMP A/RAMP B

NO SCALE

APPROVED FOR ELECTRICAL WORK ONLY

E-6

STATE OF CALIFORNIA - DEPARTMENT OF TRANSPORTATION
Caltrans® ELECTRICAL DESIGN

FUNCTIONAL SUPERVISOR: STEVEN BLOCK
CALCULATED-DESIGNED BY: ZAHRA NIKNAFS
CHECKED BY: MARY ANN HUDSPETH
REVISED BY
DATE REVISED

LAST REVISION DATE PLOTTED => 30-AUG-2012
TIME PLOTTED => 09:10

Dist	COUNTY	ROUTE	POST MILES TOTAL PROJECT	SHEET No.	TOTAL SHEETS
03	Nev	20	R4.1/R17.4	74	106

REGISTERED ELECTRICAL ENGINEER 6-4-12 DATE

6-4-12
PLANS APPROVAL DATE

REGISTERED PROFESSIONAL ENGINEER MARY ANN HUDSPETH No. 17245 Exp. 6-30-12 ELECTRICAL STATE OF CALIFORNIA

THE STATE OF CALIFORNIA OR ITS OFFICERS OR AGENTS SHALL NOT BE RESPONSIBLE FOR THE ACCURACY OR COMPLETENESS OF SCANNED COPIES OF THIS PLAN SHEET.

MODIFIED CONDUIT AND CONDUCTOR SCHEDULE

CONDUCTOR		CONDUIT RUN															
TYPE	DESIGNATION	1*	2*	3*	4*	5*	6*	7*	8*	9*	10*	11*	12*	13*	14*	15*	16*
14 AWG	Ø1	3	3	3	3	3					3	3	3				
	Ø2					3					3	3	3				
	Ø3	3	3	3		3					3	3	3				
	Ø4	3	3	3	3	3					3	3	3				
	Ø5											3	3	3	3		
	Ø6													3	3	3	3
	Ø7										3	3	3				
	Ø8										3	3	3	3	3	3	3
	Ø3P	2	2	2		2					2	2	2				
	Ø6P													2	2	2	2
	Ø3PPB	1	1	1		1					1	1	1				
	Ø6PPB													1	1	1	1
	PPB NEUTRAL	1	1	1		1					1	1	1	1	1	1	1
	SPARES	3	3	3	3	3					3	3	3	3	3	3	3
	PEC														3		
	TOTAL	16	16	16	9	19					25	28	28	16	19	13	13
12 AWG	IRRIGATION PUMP CONTROL											2					
8 AWG	LIGHTING	2	2		2	2					2	2			2	2	2
6 AWG	SIGNAL NEUTRAL	1	1	1	1	1					1	1	1	1	1	1	1
DLC	Ø1																
	Ø2				4		4	4	4	4	4	4	4				
	Ø3																
	Ø4		4											4			
	Ø5																
	Ø6																
	Ø7																
	Ø8											3	3				
	SAMPLING DETECTOR				1		1	1	1	1	1	1	1				
	TOTAL		4		5		5	5	8	8	5	8	8	4			
VIVDS CABLE		1	1				3	3	3	3	3	4	4	2	2	1	1
CONDUIT SIZE		2"**	2"**	2"**	2"**	1½"	2"	2"	2"	2"	3"**	3"**	3"**	3"	2"	2"	2"

* RC EXISTING CONDUCTORS, INSTALL PER SCHEDULE.

** RC 18" SECTION OF CONDUIT THAT ENTERS PULL BOX THEN AB EXISTING CONDUIT. INSTALL NEW CONDUIT PER SCHEDULE.

APPROVED FOR ELECTRICAL WORK ONLY

MODIFY SIGNAL AND LIGHTING
ROUTE 20 / 49 SEPARATION
RAMP A/RAMP B
NO SCALE

E-7

REVISED BY | DATE REVISED
ZAHRA NIKNAFS | MARY ANN HUDSPETH
CALCULATED-DESIGNED BY | CHECKED BY
FUNCTIONAL SUPERVISOR: STEVEN BLOCK

STATE OF CALIFORNIA - DEPARTMENT OF TRANSPORTATION
Caltrans® ELECTRICAL DESIGN

LAST REVISION | DATE PLOTTED => 30-AUG-2012 | TIME PLOTTED => 09:10

Dist	COUNTY	ROUTE	POST MILES TOTAL PROJECT	SHEET No.	TOTAL SHEETS
03	Nev	20	R4.1/R17.4	75	106

REGISTERED ELECTRICAL ENGINEER 6-4-12 DATE

6-4-12
PLANS APPROVAL DATE

REGISTERED PROFESSIONAL ENGINEER MARY ANN HUDSPETH No. 17245 Exp. 6-30-12 ELECTRICAL STATE OF CALIFORNIA

THE STATE OF CALIFORNIA OR ITS OFFICERS OR AGENTS SHALL NOT BE RESPONSIBLE FOR THE ACCURACY OR COMPLETENESS OF SCANNED COPIES OF THIS PLAN SHEET.

NOTE:

FOR ACCURATE RIGHT OF WAY DATA, CONTACT RIGHT OF WAY ENGINEERING AT THE DISTRICT OFFICE.

PROJECT NOTES (THIS SHEET ONLY):

1 PG&E SERVICE pb

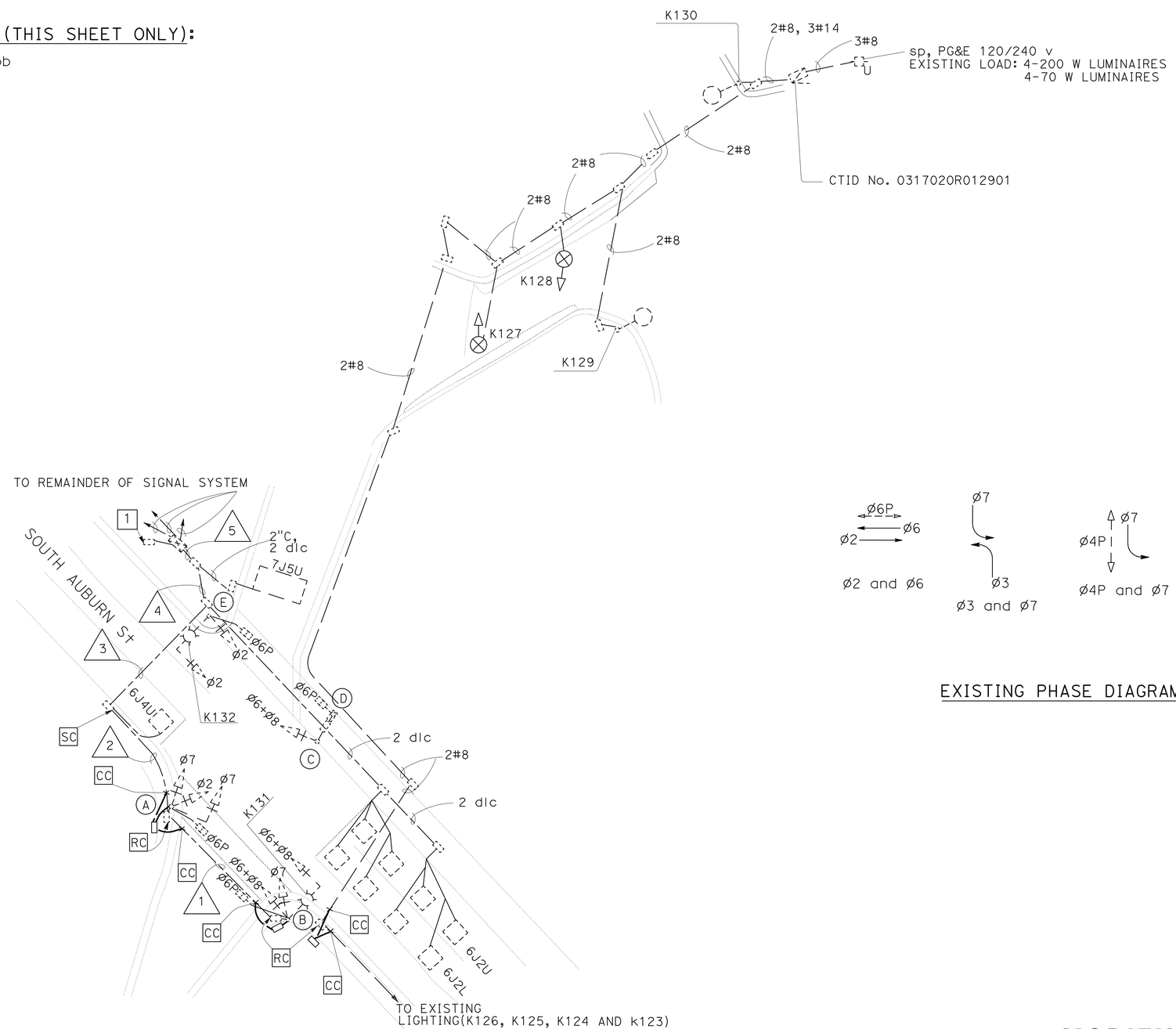

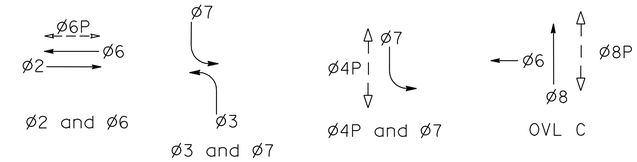

EXISTING PHASE DIAGRAM

MODIFY SIGNAL AND LIGHTING

SOUTH AUBURN WB ON RAMP

SCALE: 1" = 20'

APPROVED FOR ELECTRICAL WORK ONLY

E-8

STATE OF CALIFORNIA - DEPARTMENT OF TRANSPORTATION
Caltrans® ELECTRICAL DESIGN

FUNCTIONAL SUPERVISOR: STEVEN BLOCK
CALCULATED-DESIGNED BY: ZAHRA NIKNAFS
CHECKED BY: MARY ANN HUDSPETH
REVISED BY
DATE REVISED

LAST REVISION DATE PLOTTED => 30-AUG-2012
TIME PLOTTED => 09:10

Dist	COUNTY	ROUTE	POST MILES TOTAL PROJECT	SHEET No.	TOTAL SHEETS
03	Nev	20	R4.1/R17.4	76	106

REGISTERED ELECTRICAL ENGINEER 6-4-12 DATE

6-4-12
PLANS APPROVAL DATE

REGISTERED PROFESSIONAL ENGINEER
MARY ANN HUDSPETH
No. 17245
Exp. 6-30-12
ELECTRICAL
STATE OF CALIFORNIA

THE STATE OF CALIFORNIA OR ITS OFFICERS OR AGENTS SHALL NOT BE RESPONSIBLE FOR THE ACCURACY OR COMPLETENESS OF SCANNED COPIES OF THIS PLAN SHEET.

MODIFIED CONDUIT AND CONDUCTOR SCHEDULE

CONDUCTOR		CONDUIT RUN				
TYPE	DESIGNATION	1 *	2 *	3	4	5
14 AWG	ø2		3	3	3	3
	ø7	3	3	3	3	3
	ø6+ø8	3	3	3	6	6
	ø6P	2	2	2	4	4
	SPARES	3	3	3	3	3
	PEC				3	3
	TOTAL	11	14	14	22	22
12 AWG	ø6PPB	1	1	1	1	1
	PPB NEUTRAL	1	1	1	1	1
	TOTAL	2	2	2	2	2
10 AWG	SIGNAL NEUTRAL	1	1	1	1	1
8 AWG	LIGHTING	2	2	2	2	2
DLC	ø6			1	1	1
	ø7					1
	TOTAL			1	1	2
CONDUIT SIZE		2"	1½"	2"	2"	2"

* RC CONDUCTORS. INSTALL PER SCHEDULE.

MODIFIED POLE AND EQUIPMENT SCHEDULE

No.	STANDARDS	SIGNALS		PED SIGNAL		NOTES
		Type	Mtg	Type	Mtg	
A	16-	1W3L 2W3L	MAT SV-2-T	1W2L	SP-1-T	**
B	17-	1W3L 2W3L	MAT SV-2-T	1W2L	SP-1	**
C	1-B	1W3L	A-1	-	-	
D	1-B	-	-	1W2L	TP-1	**
E	17-	1W3L 2W3L	MAT SV-2-T	1W2L	SP-1-T	**

** RC ppb, INSTALL PPB

APPROVED FOR ELECTRICAL WORK ONLY

MODIFY SIGNAL AND LIGHTING
SOUTH AUBURN AND WB ON RAMP

NO SCALE

E-9

REVISED BY | DATE REVISED
ZAHRA NIKNAFS | MARY ANN HUDSPETH
CALCULATED-DESIGNED BY | CHECKED BY
FUNCTIONAL SUPERVISOR
STEVEN BLOCK

STATE OF CALIFORNIA - DEPARTMENT OF TRANSPORTATION
Caltrans® ELECTRICAL DESIGN

LAST REVISION | DATE PLOTTED => 30-AUG-2012 | TIME PLOTTED => 09:10

Dist	COUNTY	ROUTE	POST MILES TOTAL PROJECT	SHEET No.	TOTAL SHEETS
03	Nev	20	R4.1/R17.4	77	106

REGISTERED ELECTRICAL ENGINEER 6-4-12 DATE

6-4-12
PLANS APPROVAL DATE

REGISTERED PROFESSIONAL ENGINEER MARY ANN HUDSPETH No. 17245 Exp. 6-30-12 ELECTRICAL STATE OF CALIFORNIA

THE STATE OF CALIFORNIA OR ITS OFFICERS OR AGENTS SHALL NOT BE RESPONSIBLE FOR THE ACCURACY OR COMPLETENESS OF SCANNED COPIES OF THIS PLAN SHEET.

NOTE:

FOR ACCURATE RIGHT OF WAY DATA, CONTACT RIGHT OF WAY ENGINEERING AT THE DISTRICT OFFICE.

PROJECT NOTES (THIS SHEET ONLY):

1 RC EXISTING LOOP CONDUCTORS, dh AND EXISTING CONDUIT BETWEEN dh AND pb. CB AND SC

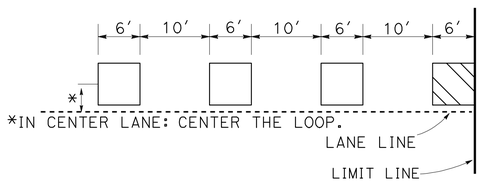

TYPICAL TYPE A AND TYPE D LOOP DETAIL
NO SCALE

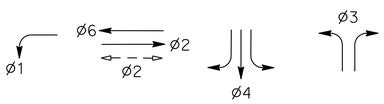

EXISTING PHASE DIAGRAM

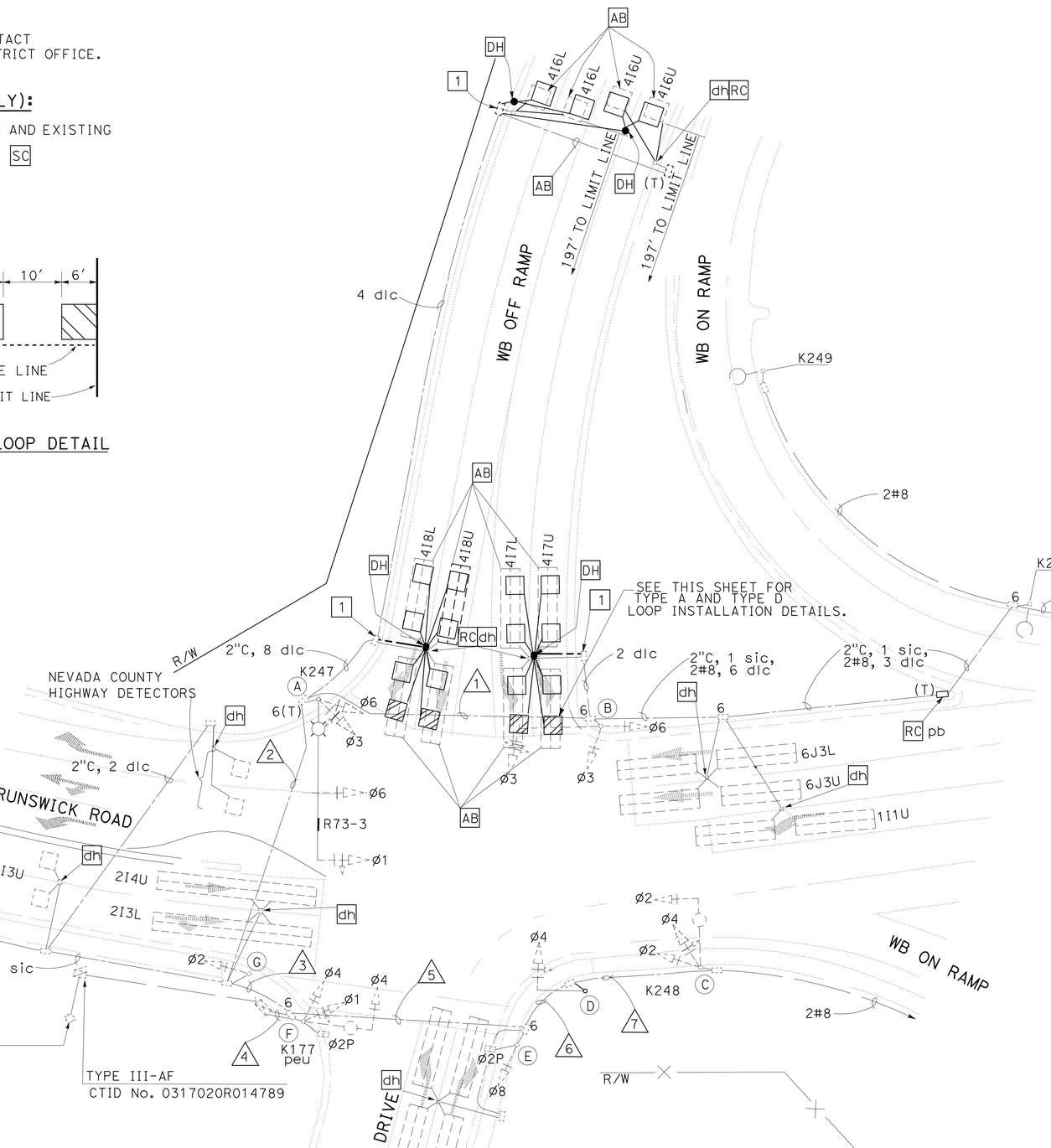

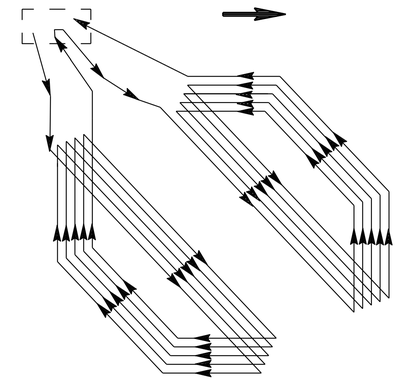

SEE STANDARD PLAN ES-5B FOR NOTES AND DETAILS

WINDING DETAIL
NO SCALE

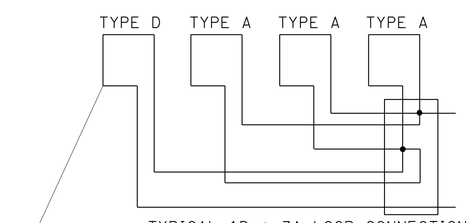

TYPE D LOOP DETECTOR,
5 TURNS AS IN WINDING DETAIL

TYPICAL LOOP CONNECTION
NO SCALE

MODIFY SIGNAL AND LIGHTING

BRUNSWICK ROAD AND WB OFF RAMP

SCALE: 1" = 20'

APPROVED FOR ELECTRICAL WORK ONLY

E-10

REVISED BY	DATE REVISED

CALCULATED-DESIGNED BY	ZAHRA NIKNAFS
CHECKED BY	MARY ANN HUDSPETH
FUNCTIONAL SUPERVISOR	STEVEN BLOCK

STATE OF CALIFORNIA - DEPARTMENT OF TRANSPORTATION
Caltrans® ELECTRICAL DESIGN

LAST REVISION DATE PLOTTED => 30-AUG-2012
TIME PLOTTED => 09:10

Dist	COUNTY	ROUTE	POST MILES TOTAL PROJECT	SHEET No.	TOTAL SHEETS
03	Nev	20	R4.1/R17.4	78	106

Mary Ann Hudspeth 6-4-12
REGISTERED ELECTRICAL ENGINEER DATE

6-4-12
PLANS APPROVAL DATE

REGISTERED PROFESSIONAL ENGINEER
MARY ANN HUDSPETH
No. 17245
Exp. 6-30-12
ELECTRICAL
STATE OF CALIFORNIA

THE STATE OF CALIFORNIA OR ITS OFFICERS OR AGENTS SHALL NOT BE RESPONSIBLE FOR THE ACCURACY OR COMPLETENESS OF SCANNED COPIES OF THIS PLAN SHEET.

EXISTING CONDUIT AND CONDUCTOR SCHEDULE

CONDUCTOR		CONDUIT RUN						
TYPE	DESIGNATION	1	2	3	4	5	6	7
14 AWG	Ø1		3	3	6			
	Ø2			3	6	3	3	3
	Ø3	3	3	3	6	3		
	Ø4				6	3	3	3
	Ø6	3	3	3	3			
	Ø2P				4	2		
	Ø2PPB				1	1		
	PPB COMMON				1	1		
	PEC				3			
	SPARES	3	3	3	6	3	3	3
	TOTAL	9	12	15	42	16	9	9
10 AWG	SIGNAL NEUTRAL	1	1	1	2	1	1	1
8 AWG	LUMINAIRES	2	2	2	2	2	2	2
DLC	Ø1	2	2	2	2			
	Ø2			5	5			
	Ø3				2	2		
	Ø4	2	8	8	8			
	Ø6	4	4	4	4			
	TOTAL	8	14	19	21	2		
SIC		1	1	2	2			
CONDUIT SIZE		2"	3"	3"	2-2 1/2"	2"	2"	2"

MODIFIED POLE AND EQUIPMENT SCHEDULE

No.	STANDARD			VEH SIG MTG			PED SIGNAL	PPB		LED LUMINAIRE	SPECIAL REQUIREMENTS
	TYPE	SMA	LMA	Ø	MAST ARM	POLE	MTG	Ø	ARROW		
A	29-5-129	55	12	3 6	MAS MAS	SV-2-T				165 W *	
B	18-2-129	30		3 6	MAS-4C	SV-2-T					
C	17-3-129	20	12	2 4	MAS	SV-2-T				165 W *	
D	18-2-129	15		4	MAS						
E	1-B			8		TV-1-T	SP-1-T		→		**
F	17-2-129	20	6	1 4	MAS	SV-2-T	SP-1-T	2	←	165 W *	**
G	1-B			2		TV-1-T					

* RC hps LUMINAIRE. INSTALL PER SCHEDULE.

** RC ppb, INSTALL PPB

MODIFY SIGNAL AND LIGHTING
BRUNSWICK ROAD AND WB OFF RAMP

NO SCALE

E-11

APPROVED FOR ELECTRICAL WORK ONLY

STATE OF CALIFORNIA - DEPARTMENT OF TRANSPORTATION
Caltrans ELECTRICAL DESIGN

FUNCTIONAL SUPERVISOR: STEVEN BLOCK
CALCULATED-DESIGNED BY: ZAHRA NIKNAFS
CHECKED BY: MARY ANN HUDSPETH
REVISED BY
DATE REVISED

LAST REVISION
DATE PLOTTED => 30-AUG-2012
TIME PLOTTED => 09:10

Dist	COUNTY	ROUTE	POST MILES TOTAL PROJECT	SHEET No.	TOTAL SHEETS
03	Nev	20	R4.1/R17.4	79	106

REGISTERED ELECTRICAL ENGINEER 6-4-12 DATE

6-4-12
PLANS APPROVAL DATE

REGISTERED PROFESSIONAL ENGINEER MARY ANN HUDSPETH No. 17245 Exp. 6-30-12 ELECTRICAL STATE OF CALIFORNIA

THE STATE OF CALIFORNIA OR ITS OFFICERS OR AGENTS SHALL NOT BE RESPONSIBLE FOR THE ACCURACY OR COMPLETENESS OF SCANNED COPIES OF THIS PLAN SHEET.

PROJECT NOTES (THIS SHEET ONLY):

1 EXISTING TYPE M CABINET.

2 RC EXISTING LOOP CONDUCTORS, dh AND EXISTING CONDUIT BETWEEN dh AND pb. CB

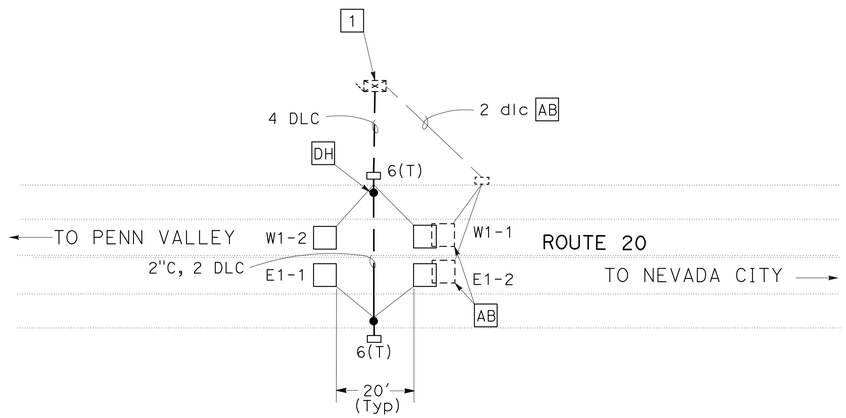

COUNT STATION No. 142
NEV 20 PM 10.8
EAST OF DEADMANS FLAT OC

N1-2

1 = ENTERING DETECTOR
2 = LEAVING DETECTOR
LANE NUMBER
N = NORTHBOUND
S = SOUTHBOUND
E = EASTBOUND
W = WESTBOUND

1 = 1ST LANE FROM LEFT
2 = 2ND LANE FROM LEFT
3 = 3RD LANE FROM LEFT
4 = 4TH LANE FROM LEFT

FREEWAY MAINLINE DETECTOR
DETECTOR IDENTIFICATION

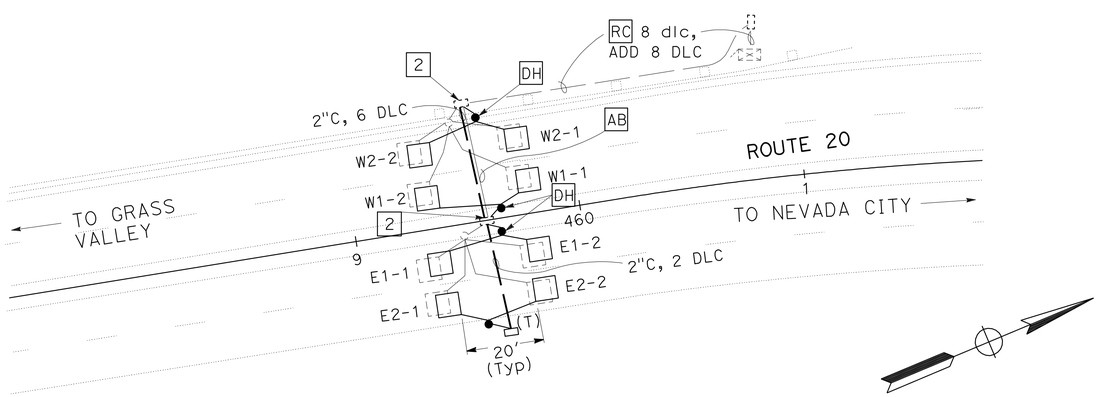

COUNT STATION No. 146
NEV 20 PM 15.31
SOUTH OF BANNER RIDGE OC

MODIFY TRAFFIC MONITORING STATION (COUNT)

NO SCALE

APPROVED FOR ELECTRICAL WORK ONLY

E-12

REVISED BY | DATE REVISED
ZAHRA NIKNAFS | MARY ANN HUDSPETH
CALCULATED-DESIGNED BY | CHECKED BY
FUNCTIONAL SUPERVISOR | STEVEN BLOCK
STATE OF CALIFORNIA - DEPARTMENT OF TRANSPORTATION
Caltrans® ELECTRICAL DESIGN

LAST REVISION | DATE PLOTTED => 30-AUG-2012 | TIME PLOTTED => 09:10

Dist	COUNTY	ROUTE	POST MILES TOTAL PROJECT	SHEET No.	TOTAL SHEETS
03	Nev	20	R4.1/R17.4	80	106

Mary Ann Hudspeth 6-4-12
REGISTERED ELECTRICAL ENGINEER DATE

6-4-12
PLANS APPROVAL DATE

REGISTERED PROFESSIONAL ENGINEER
MARY ANN HUDSPETH
No. 17245
Exp. 6-30-12
ELECTRICAL
STATE OF CALIFORNIA

THE STATE OF CALIFORNIA OR ITS OFFICERS OR AGENTS SHALL NOT BE RESPONSIBLE FOR THE ACCURACY OR COMPLETENESS OF SCANNED COPIES OF THIS PLAN SHEET.

GENERAL NOTE:

FOR EXACT LOCATION OF THE DETECTOR LOOPS, CONTACT CENSUS AT (530) 218-1931 FORTY-EIGHT HOURS PRIOR TO INSTALLATION.

RAMP LOCATIONS

DESCRIPTION	Approx POST MILE
EB OFF TO MCCOURTNEY Rd	11.96
EB ON FROM MCCOURTNEY Rd	12.07
WB ON FROM MILL St	12.02
WB OFF TO MILL St	12.10
EB OFF TO SB 49 AT 20/49 SEPARATION	12.47
WB 20/49 TO WB 20 AT 20/49 SEPARATION	12.47
EB 20 TO EB 20/49 AT 20/49 SEPARATION	12.47
WB ON FROM S AUBURN St	12.7
EB OFF TO S AUBURN St	12.7
EB ON FROM BENNETT St	13.25
WB OFF TO BENNETT St	13.27
EB OFF TO IDAHO-MARYLAND Rd	13.61
EB LOOP ON FROM IDAHO-MARYLAND Rd	13.61
EB DIRECT ON FROM BRUNSWICK Rd	14.80
WB LOOP ON FROM BRUNSWICK Rd	14.80
WB ON TO BRUNSWICK Rd	14.80
EB OFF TO BROAD St	16.99
WB ON FROM BROAD St	16.99

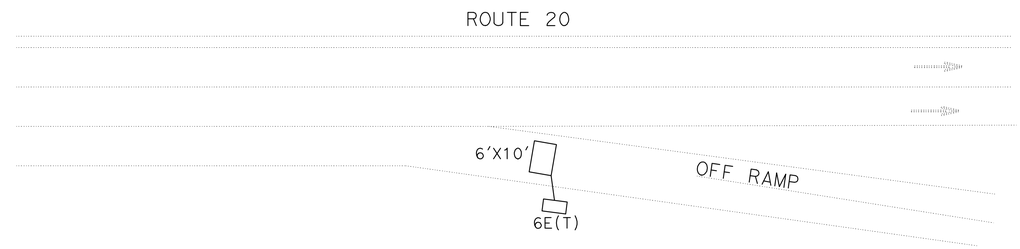

OFF RAMP LOOP DETAIL

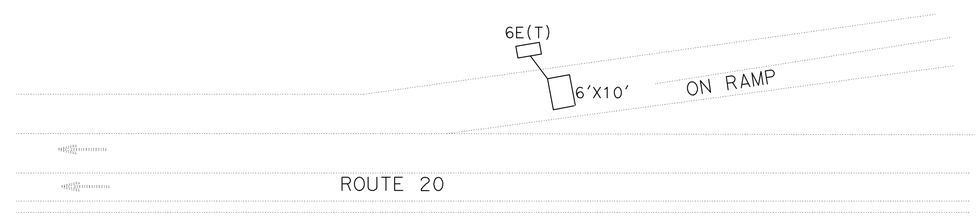

ON RAMP LOOP DETAIL

DETECTOR LOOP

NO SCALE

E-13

APPROVED FOR ELECTRICAL WORK ONLY

STATE OF CALIFORNIA - DEPARTMENT OF TRANSPORTATION
Caltrans ELECTRICAL DESIGN

FUNCTIONAL SUPERVISOR: STEVEN BLOCK
CALCULATED-DESIGNED BY: ZAHRA NIKNAFS
CHECKED BY: MARY ANN HUDSPETH
REVISED BY
DATE REVISED

LAST REVISION DATE PLOTTED => 30-AUG-2012
TIME PLOTTED => 09:10

Dist	COUNTY	ROUTE	POST MILES TOTAL PROJECT	SHEET No.	TOTAL SHEETS
03	Nev	20	R4.1/R17.4	81	106

REGISTERED ELECTRICAL ENGINEER 6-4-12 DATE

6-4-12
PLANS APPROVAL DATE

REGISTERED PROFESSIONAL ENGINEER
MARY ANN HUDSPETH
No. 17245
Exp. 6-30-12
ELECTRICAL
STATE OF CALIFORNIA

THE STATE OF CALIFORNIA OR ITS OFFICERS OR AGENTS SHALL NOT BE RESPONSIBLE FOR THE ACCURACY OR COMPLETENESS OF SCANNED COPIES OF THIS PLAN SHEET.

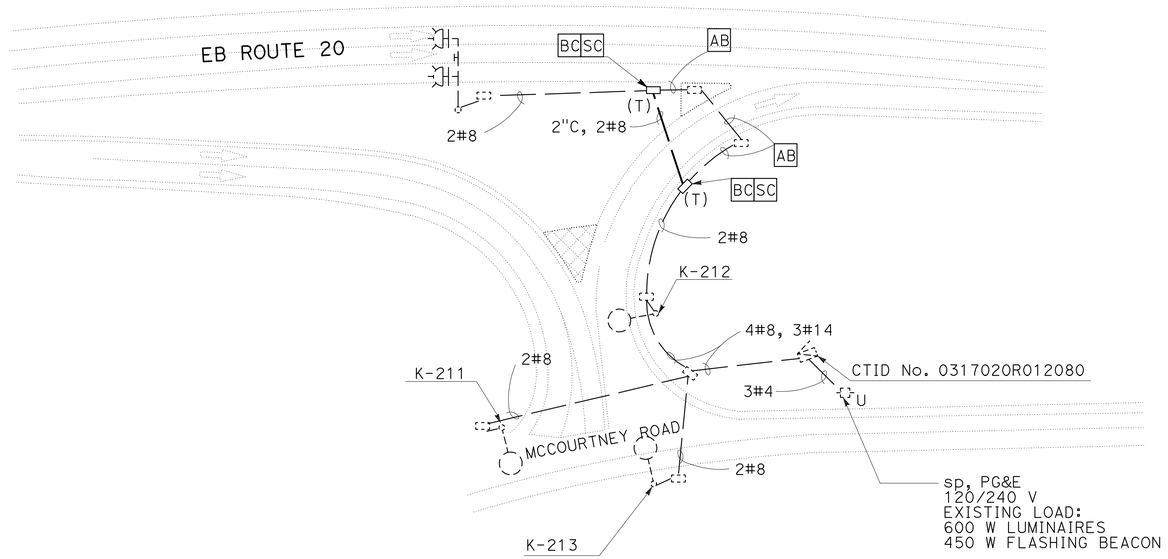

EB MCCOURTNEY ROAD ON RAMP

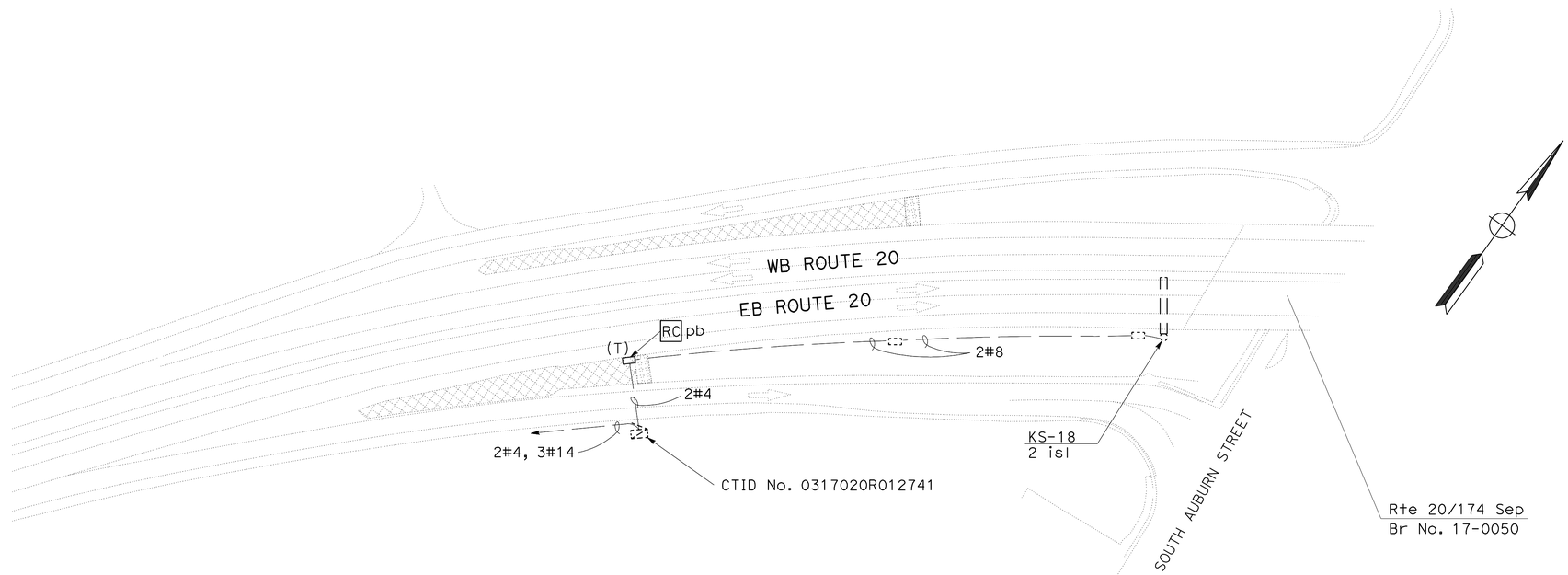

EB OFF RAMP TO SOUTH AUBURN STREET

APPROVED FOR ELECTRICAL WORK ONLY

REPLACE PULL BOX

NO SCALE

E-14

STATE OF CALIFORNIA - DEPARTMENT OF TRANSPORTATION
Caltrans® ELECTRICAL DESIGN

FUNCTIONAL SUPERVISOR: STEVEN BLOCK
CALCULATED-DESIGNED BY: ZAHRA NIKNAFS
CHECKED BY: MARY ANN HUDSPETH
REVISED BY
DATE REVISED

LAST REVISION
DATE PLOTTED => 30-AUG-2012
TIME PLOTTED => 09:10

Dist	COUNTY	ROUTE	POST MILES TOTAL PROJECT	SHEET No.	TOTAL SHEETS
03	Nev	20	R4.1/R17.4	82	106

Mary Ann Hudspeth 6-4-12
REGISTERED ELECTRICAL ENGINEER DATE

6-4-12
PLANS APPROVAL DATE

REGISTERED PROFESSIONAL ENGINEER
MARY ANN HUDSPETH
No. 17245
Exp. 6-30-12
ELECTRICAL
STATE OF CALIFORNIA

THE STATE OF CALIFORNIA OR ITS OFFICERS OR AGENTS SHALL NOT BE RESPONSIBLE FOR THE ACCURACY OR COMPLETENESS OF SCANNED COPIES OF THIS PLAN SHEET.

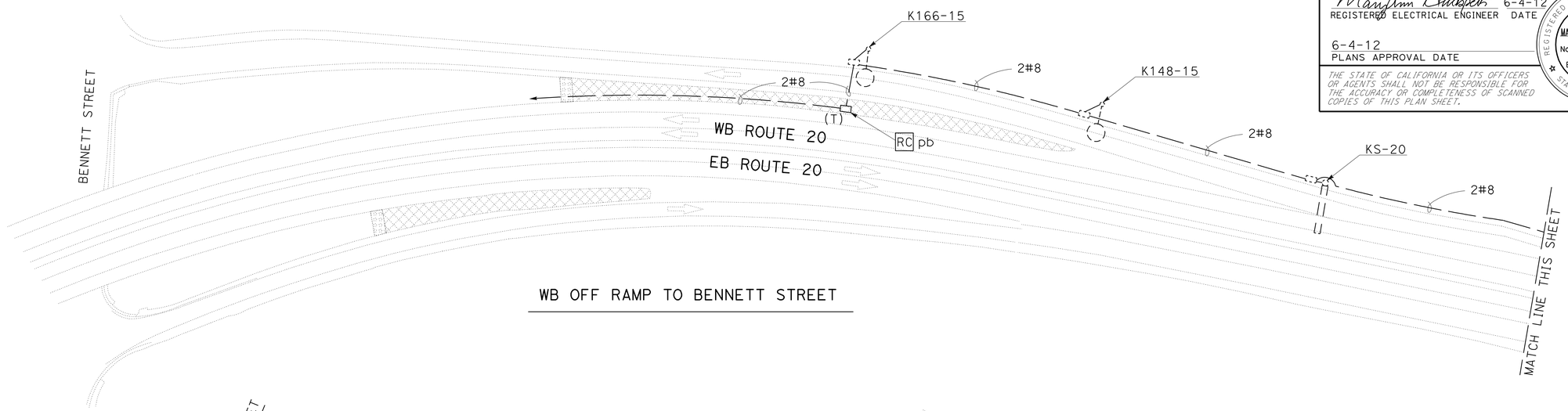

WB OFF RAMP TO BENNETT STREET

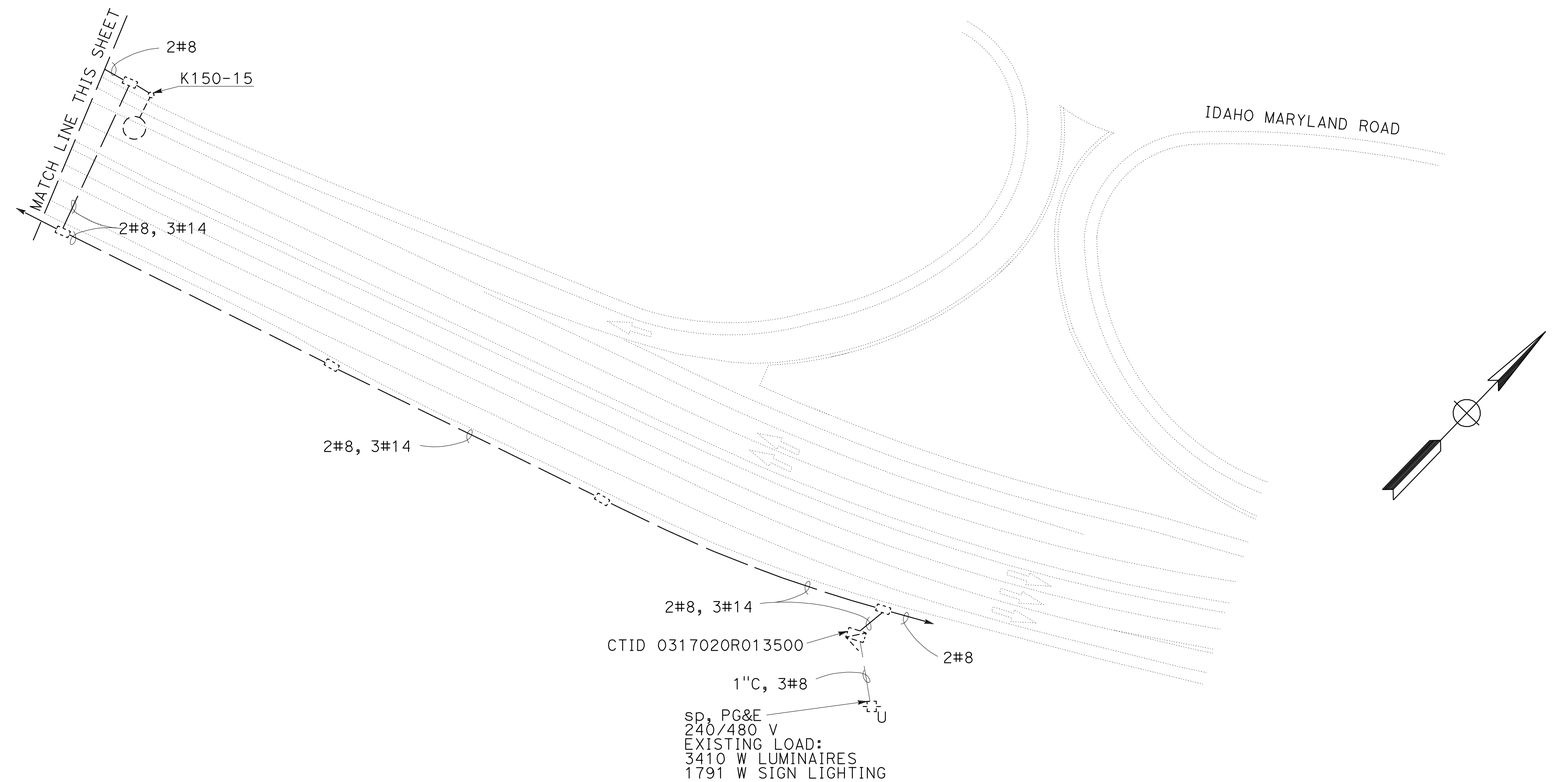

WB ON RAMP FROM IDAHO MARYLAND ROAD

REPLACE PULL BOX

NO SCALE

APPROVED FOR ELECTRICAL WORK ONLY

E-15

STATE OF CALIFORNIA - DEPARTMENT OF TRANSPORTATION
Caltrans® ELECTRICAL DESIGN

FUNCTIONAL SUPERVISOR: STEVEN BLOCK
CALCULATED-DESIGNED BY: ZAHRA NIKNAFS
CHECKED BY: MARY ANN HUDSPETH
REVISED BY
DATE REVISED

LAST REVISION
DATE PLOTTED => 30-AUG-2012
TIME PLOTTED => 09:10

Dist	COUNTY	ROUTE	POST MILES TOTAL PROJECT	SHEET No.	TOTAL SHEETS
03	Nev	20	R4.1/R17.4	83	106

REGISTERED ELECTRICAL ENGINEER 6-4-12 DATE

6-4-12
PLANS APPROVAL DATE

REGISTERED PROFESSIONAL ENGINEER MARY ANN HUDSPETH No. 17245 Exp. 6-30-12 ELECTRICAL STATE OF CALIFORNIA

THE STATE OF CALIFORNIA OR ITS OFFICERS OR AGENTS SHALL NOT BE RESPONSIBLE FOR THE ACCURACY OR COMPLETENESS OF SCANNED COPIES OF THIS PLAN SHEET.

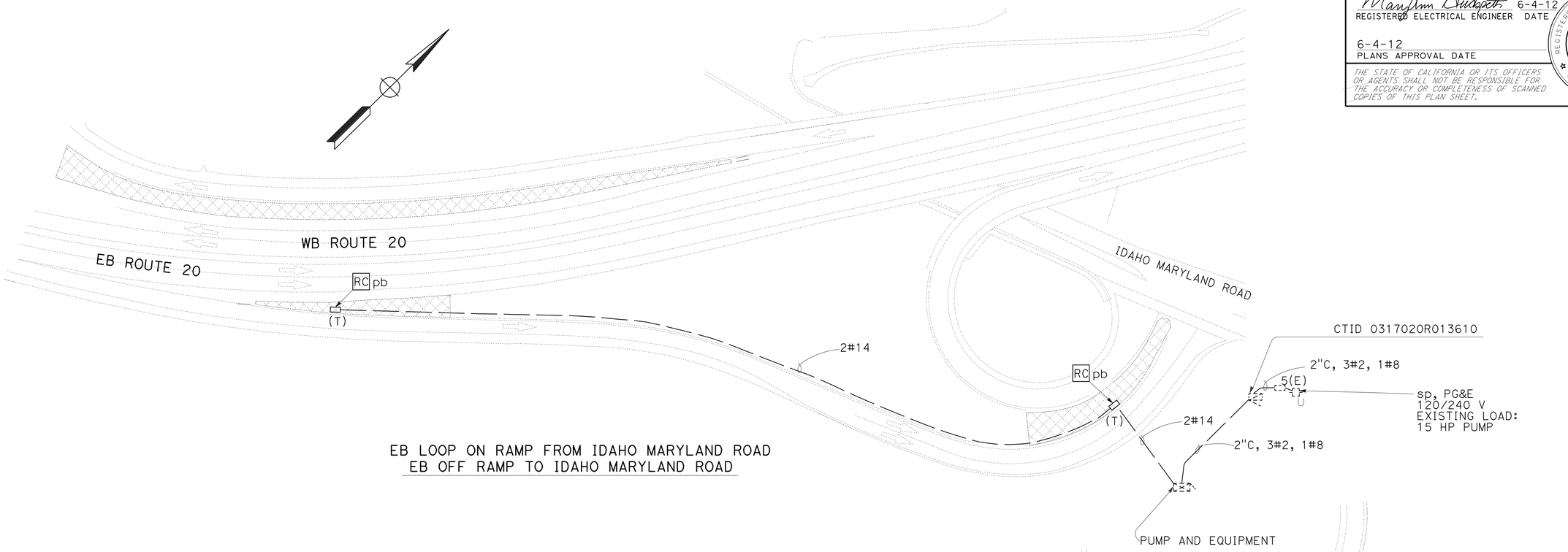

EB LOOP ON RAMP FROM IDAHO MARYLAND ROAD
EB OFF RAMP TO IDAHO MARYLAND ROAD

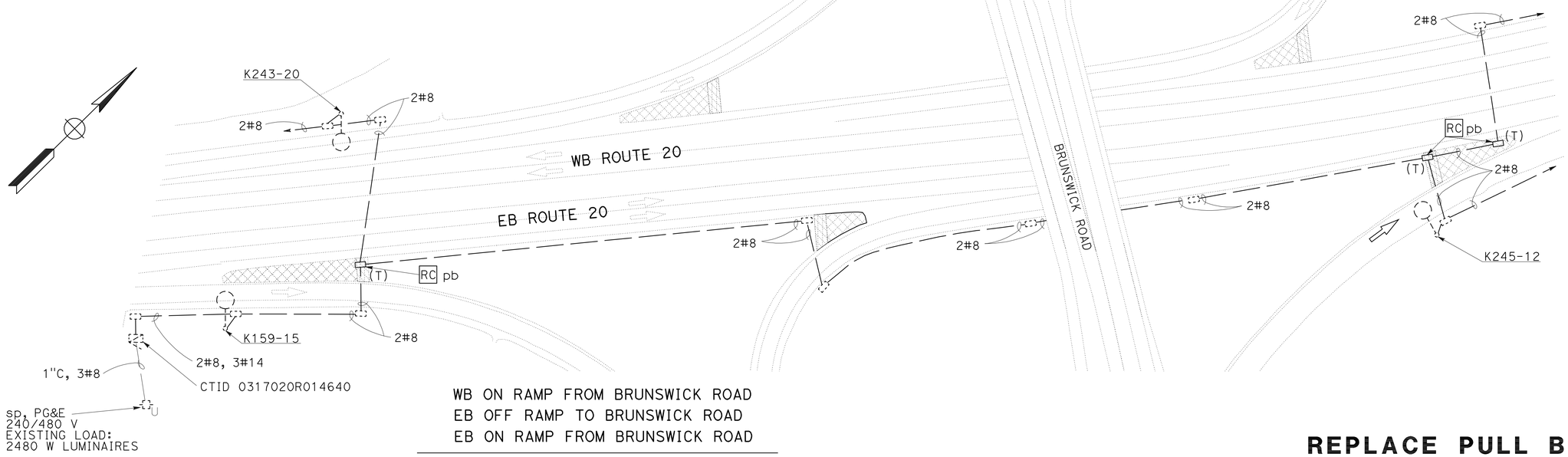

WB ON RAMP FROM BRUNSWICK ROAD
EB OFF RAMP TO BRUNSWICK ROAD
EB ON RAMP FROM BRUNSWICK ROAD

APPROVED FOR ELECTRICAL WORK ONLY

REPLACE PULL BOX

NO SCALE

E-16

STATE OF CALIFORNIA - DEPARTMENT OF TRANSPORTATION
Caltrans® ELECTRICAL DESIGN

FUNCTIONAL SUPERVISOR: STEVEN BLOCK
CALCULATED-DESIGNED BY: ZAHRA NIKNAFS
CHECKED BY: MARY ANN HUDSPETH
REVISED BY
DATE REVISED

LAST REVISION
DATE PLOTTED => 30-AUG-2012
TIME PLOTTED => 09:10

Dist	COUNTY	ROUTE	POST MILES TOTAL PROJECT	SHEET No.	TOTAL SHEETS
03	Nev	20	R4.1/R17.4	84	106

REGISTERED ELECTRICAL ENGINEER 6-4-12 DATE

6-4-12
PLANS APPROVAL DATE

REGISTERED PROFESSIONAL ENGINEER
MARY ANN HUDSPETH
No. 17245
Exp. 6-30-12
ELECTRICAL
STATE OF CALIFORNIA

THE STATE OF CALIFORNIA OR ITS OFFICERS OR AGENTS SHALL NOT BE RESPONSIBLE FOR THE ACCURACY OR COMPLETENESS OF SCANNED COPIES OF THIS PLAN SHEET.

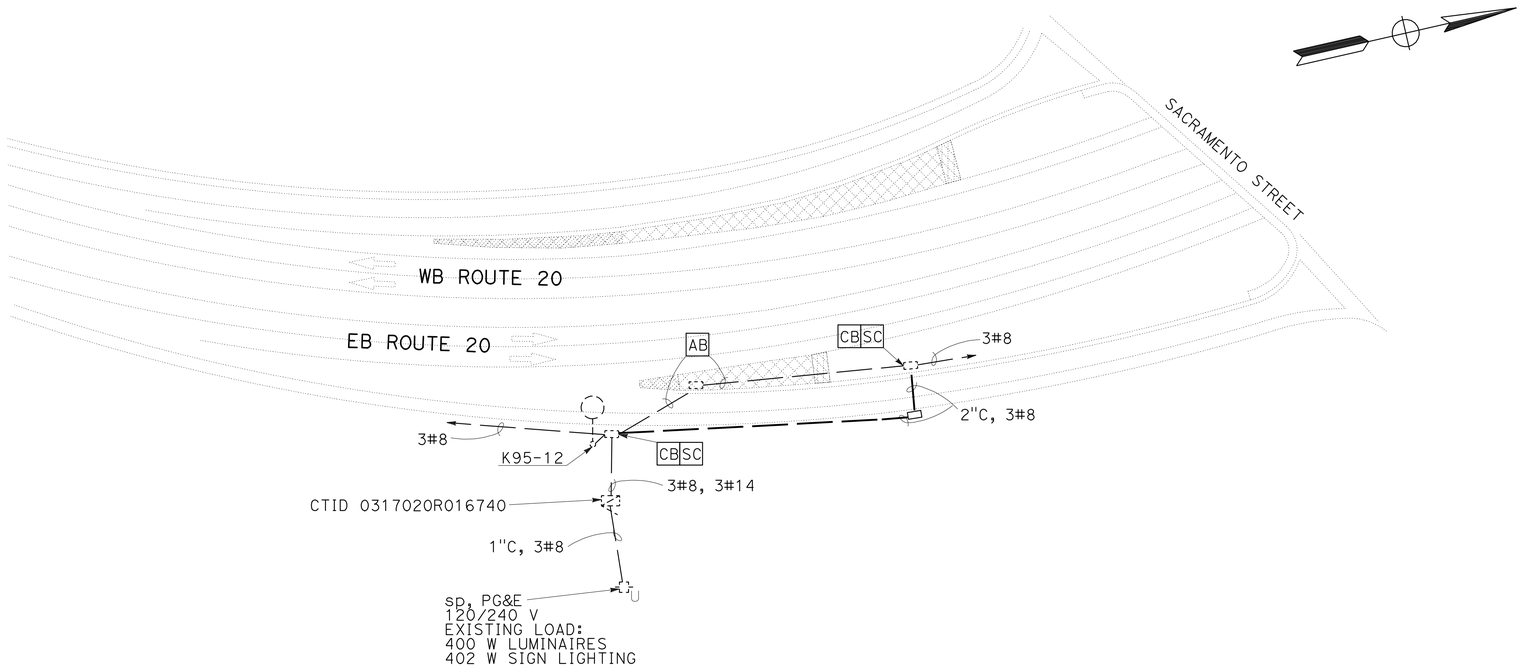

EB OFF RAMP TO SACRAMENTO STREET

APPROVED FOR ELECTRICAL WORK ONLY

REPLACE PULL BOX

NO SCALE

E-17

STATE OF CALIFORNIA - DEPARTMENT OF TRANSPORTATION
Caltrans® ELECTRICAL DESIGN

FUNCTIONAL SUPERVISOR: STEVEN BLOCK

CALCULATED-DESIGNED BY: ZAHRA NIKNAFS
CHECKED BY: MARY ANN HUDSPETH

REVISED BY
DATE REVISED

LAST REVISION
DATE PLOTTED => 30-AUG-2012
TIME PLOTTED => 09:10

Dist	COUNTY	ROUTE	POST MILES TOTAL PROJECT	SHEET No.	TOTAL SHEETS
03	Nev	20	R4.1/R17.4	85	106

REGISTERED ELECTRICAL ENGINEER 6-4-12 DATE

6-4-12
PLANS APPROVAL DATE

REGISTERED PROFESSIONAL ENGINEER MARY ANN HUDSPETH No. 17245 Exp. 6-30-12 ELECTRICAL STATE OF CALIFORNIA

THE STATE OF CALIFORNIA OR ITS OFFICERS OR AGENTS SHALL NOT BE RESPONSIBLE FOR THE ACCURACY OR COMPLETENESS OF SCANNED COPIES OF THIS PLAN SHEET.

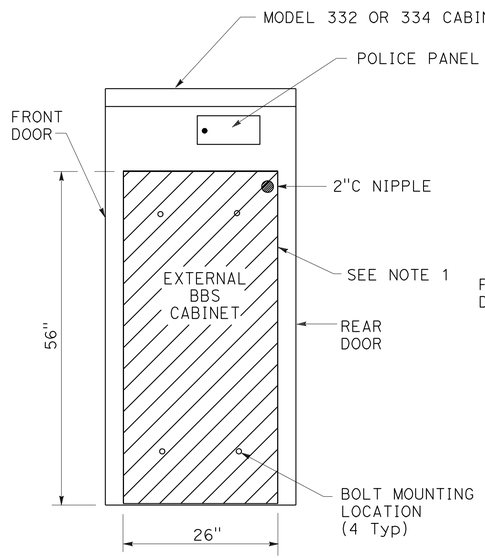

SIDE VIEW

EXTERNAL BBS CABINET MOUNTED TO THE MODEL 332 OR 334 CABINET

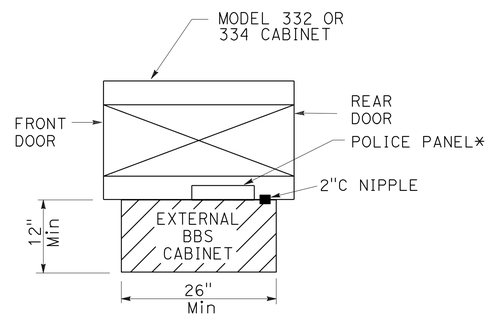

TOP VIEW

NOTES: (FOR THIS SHEET ONLY)

1. THE EXTERNAL BBS CABINET SHALL BE MOUNTED TO THE MODEL 332 OR 334 CABINET WITH FOUR 18-8 STAINLESS STEEL HEX HEAD, FULLY-THREADED, 3/8"-16 X 1" BOLTS; TWO WASHERS PER BOLT, DESIGNED FOR 3/8" BOLTS AND ARE 18-8 STAINLESS STEEL, 1" OUTSIDE DIAMETER, ROUND, AND FLAT; AND ONE K-LOCK NUT PER BOLT THAT IS 18-8 STAINLESS STEEL AND A HEX-NUT. THE ENGINEER WILL HAVE TO APPROVE THE BOLT MOUNTING LOCATION PRIOR TO INSTALLATION.
2. THE ANCHOR BOLTS SHALL BE 3/4" Dia X 15" WITH A 2"-90° BEND. THE CABINET MANUFACTURER'S SPECIFICATION SHALL DETERMINE THE LOCATION OF THE ANCHOR BOLTS IN THE FOUNDATION. THE ENGINEER WILL HAVE TO APPROVE THE ANCHOR BOLTS AND ITS LOCATION IN THE FOUNDATION PRIOR TO CONSTRUCTION.
3. THE CONTRACTOR SHALL VERIFY THE DIMENSIONS OF THE BBS CABINET PRIOR TO CONSTRUCTING THE FOUNDATION OF THE MODIFIED PORTION OF THE Std MODEL 332 AND 334 CABINET FOUNDATION. FOUNDATION DETAIL SHEET. THE ENGINEER WILL HAVE TO APPROVE ANY NECESSARY DEVIATIONS PRIOR TO CONSTRUCTION.
4. ALL DIMENSIONS ARE NOMINAL.

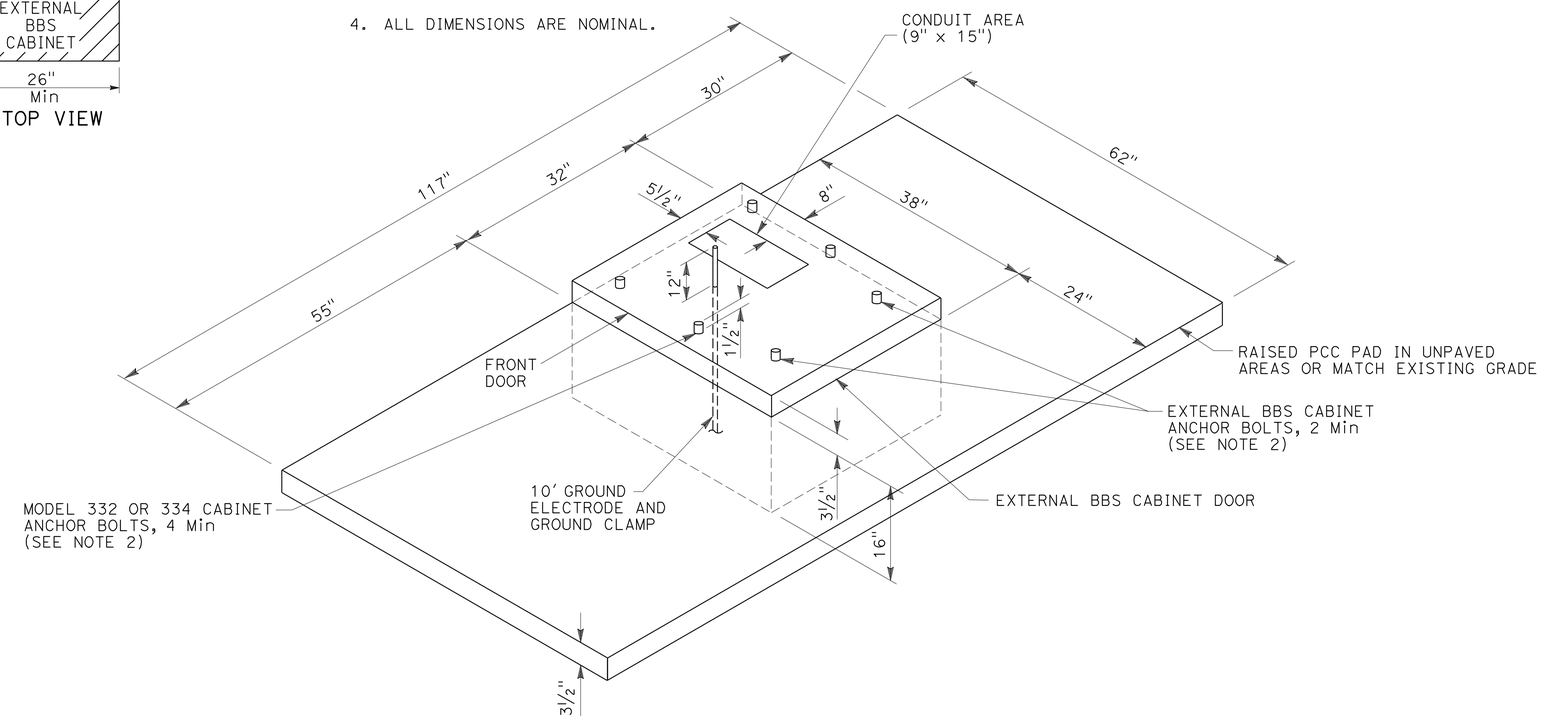

MODIFIED MODEL 332 AND 334 CABINET FOUNDATION DETAIL FOR BATTERY BACKUP SYSTEM (BBS)

(FOR DIMENSIONS AND DETAILS NOT SHOWN AND ADDITIONAL NOTES, SEE SHEET ES-3C OF THE STANDARD PLANS FOR MODEL 332 AND 334 CABINETS)

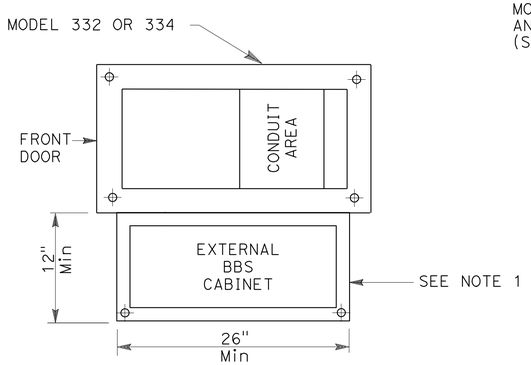

BASE PLAN FOR BBS MOUNTED TO THE MODEL 332 OR 334 CABINET

(FOR DIMENSIONS AND DETAILS NOT SHOWN, SEE SHEET A6-1 TO A6-4, CABINET HOUSING DETAILS OF THE TRANSPORTATION ELECTRICAL EQUIPMENT SPECIFICATION (TEES) AND 332D CABINET DETAIL SHEET)

MODIFY SIGNAL AND LIGHTING
(BATTERY BACKUP SYSTEM FOUNDATION DETAILS)

NO SCALE

APPROVED FOR ELECTRICAL WORK ONLY

E-18

STATE OF CALIFORNIA - DEPARTMENT OF TRANSPORTATION
Caltrans® ELECTRICAL DESIGN

FUNCTIONAL SUPERVISOR: STEVEN BLOCK
CALCULATED-DESIGNED BY: ZAHRA NIKNAFS
CHECKED BY: MARY ANN HUDSPETH
REVISED BY
DATE REVISED

LAST REVISION
DATE PLOTTED => 30-AUG-2012
TIME PLOTTED => 09:10

DIST	COUNTY	ROUTE	POST MILES TOTAL PROJECT	SHEET No	TOTAL SHEETS
03	Nev	20	R4.1/R17.4	86	106

Eliseo Lopez 5/9/12
REGISTERED CIVIL ENGINEER DATE

6-4-12
PLANS APPROVAL DATE

REGISTERED PROFESSIONAL ENGINEER ELISEO LOPEZ No. C72910 Exp. 12/31/12 CIVIL STATE OF CALIFORNIA

The State of California or its officers or agents shall not be responsible for the accuracy or completeness of electronic copies of this plan sheet.

To get to the Caltrans web site, go to: http://www.dot.ca.gov

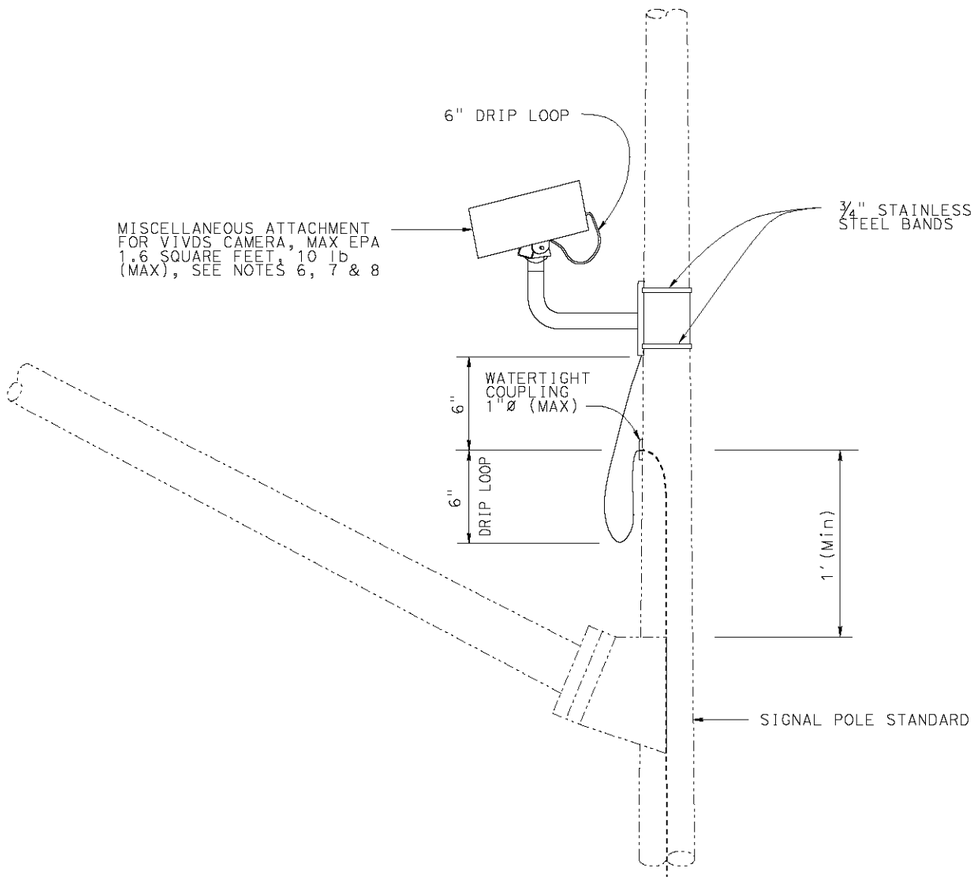

SIGNAL POLE MOUNT FOR EXISTING TRAFFIC SIGNAL STRUCTURES

TABLE 1 - PLEASANT VALLEY ROAD	
Traffic Signal Pole Type	**Traffic Signal Pole No.**
Type 26-4-80	**B**
Type 24-4-80	**C**
Type 26-4-80	**E**
Type 24-3-80	**F**

NOTES:

1. Exact mounting location of miscellaneous attachment and bracket shall be approved by the Engineer per manufacturer's recommendation.
2. Location of cable entrances on signal pole shall be a minimum of 1' from any flange or base plate.
3. For hybrid cable entrances drill and tap signal pole for watertight coupling as required.
4. Hybrid cable shall have a drip loop at the entrance into signal pole, luminaire mast arm and signal mast arm.
5. A single hybrid cable shall run continuous and shall not be twisted from the miscellaneous attachment to the controller cabinet. No splices shall be allowed.
6. Use the manufacturer's Effective Projected Area (EPA) for miscellaneous attachment. The maximum EPA for each miscellaneous attachment shall be 1.6 square feet.
7. Maximum of one miscellaneous attachments per traffic signal structure, allowed if no previous modifications/loading have been added.
8. Miscellaneous attachment can only be mounted on the trafic signal post.
9. Miscellaneous attachment shall be mounted using clamping devices.

THE CONTRACTOR SHALL VERIFY ALL CONTROLLING FIELD DIMENSIONS BEFORE ORDERING OR FABRICATING ANY MATERIAL.

NO SCALE

BRANCH CHIEF JEFFREY B WOODY

	BY	CHECKED
DESIGN	E LOPEZ	K C LIU
DETAILS	A R DUDSAK	K C LIU
QUANTITIES		

STATE OF CALIFORNIA
DEPARTMENT OF TRANSPORTATION

DIVISION OF ENGINEERING SERVICES
DESIGN AND TECHNICAL SERVICES
SPECIAL DESIGNS BRANCH A

BRIDGE NO. N/A
POST MILE R4.1/R17.4

ELECTRICAL SYSTEMS
MISCELLANEOUS ATTACHMENT DETAILS FOR PLEASANT VALLEY ROAD

SES-1

(ENGLISH) SPECIAL DESIGNS BRANCH BORDER SHEET (REV. 7-1-09)

ORIGINAL SCALE IN INCHES FOR REDUCED PLANS 0 1 2 3

UNIT: 3619
PROJECT NUMBER & PHASE: 0300020592-1
CONTRACT NO.: 03-2F35U1

DISREGARD PRINTS BEARING EARLIER REVISION DATES

REVISION DATES: 5-3-12 5-7-12 5-9-12

SHEET X OF X

FILE => spec_des_br_prj/2012sd/03-2F35U1/$REQUEST

USERNAME => $USER DATE PLOTTED => $DATE TIME PLOTTED => $TIME

DIST	COUNTY	ROUTE	POST MILES TOTAL PROJECT	SHEET No	TOTAL SHEETS
03	Nev	20	R4.1/R17.4	87	106

Eliseo Lopez 5/9/12
REGISTERED CIVIL ENGINEER DATE

6-4-12
PLANS APPROVAL DATE

REGISTERED PROFESSIONAL ENGINEER ELISEO LOPEZ No. C72910 Exp. 12/31/12 CIVIL STATE OF CALIFORNIA

The State of California or its officers or agents shall not be responsible for the accuracy or completeness of electronic copies of this plan sheet.

To get to the Caltrans web site, go to: http://www.dot.ca.gov

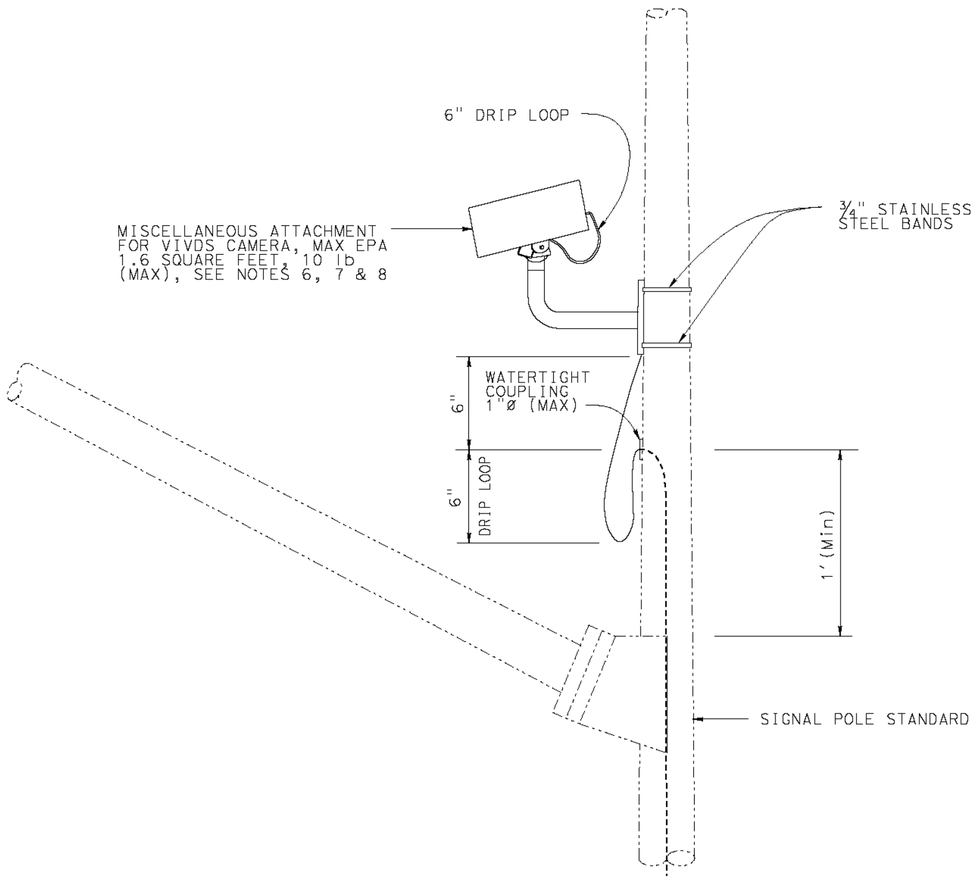

SIGNAL POLE MOUNT FOR EXISTING TRAFFIC SIGNAL STRUCTURES

TABLE 1 - ROUTE 20/49 SEPARATION RAMP A/RAMP B	
Traffic Signal Pole Type	Traffic Signal Pole No.
Type 26-3-80	A
Type 19-3-80	C
Type 24-3-80	E
Type 24-3-80	G
Type 26-4-80	H

NOTES:

1. Exact mounting location of miscellaneous attachment and bracket shall be approved by the Engineer per manufacturer's recommendation.
2. Location of cable entrances on signal pole shall be a minimum of 1' from any flange or base plate.
3. For hybrid cable entrances, drill and tap signal pole for watertight coupling as required.
4. Hybrid cable shall have a drip loop at the entrance into signal pole, luminaire mast arm and signal mast arm.
5. A single hybrid cable shall run continuous and shall not be twisted from the miscellaneous attachment to the controller cabinet. No splices shall be allowed.
6. Use the manufacturer's Effective Projected Area (EPA) for miscellaneous attachment. The maximum EPA for each miscellaneous attachment shall be 1.6 square feet.
7. Maximum of one miscellaneous attachments per traffic signal structure, allowed if no previous modifications/loading have been added.
8. Miscellaneous attachment can only be mounted on the trafic signal post.
9. Miscellaneous attachment shall be mounted using clamping devices.

THE CONTRACTOR SHALL VERIFY ALL CONTROLLING FIELD DIMENSIONS BEFORE ORDERING OR FABRICATING ANY MATERIAL.

NO SCALE

BRANCH CHIEF JEFFREY B WOODY

	BY	CHECKED
DESIGN	E LOPEZ	K C LIU
DETAILS	A R DUDSAK	K C LIU
QUANTITIES		

STATE OF CALIFORNIA
DEPARTMENT OF TRANSPORTATION

DIVISION OF ENGINEERING SERVICES
DESIGN AND TECHNICAL SERVICES
SPECIAL DESIGNS BRANCH A

BRIDGE NO. N/A
POST MILE R4.1/R17.4

ELECTRICAL SYSTEMS
MISCELLANEOUS ATTACHMENT DETAILS ROUTE 20/49 SEPARATION RAMP A/RAMP B

SES-2

(ENGLISH) SPECIAL DESIGNS BRANCH BORDER SHEET (REV. 7-1-09)

ORIGINAL SCALE IN INCHES FOR REDUCED PLANS 0 1 2 3

UNIT: 3619
PROJECT NUMBER & PHASE: 0300020592-1
CONTRACT NO.: 03-2F35U1

DISREGARD PRINTS BEARING EARLIER REVISION DATES
REVISION DATES: 5-3-12 5-7-12 5-9-12

SHEET X OF X

FILE => spec_des_br_prj/2012sd/03-2F35U1/$REQUEST

USERNAME => $USER DATE PLOTTED => $DATE TIME PLOTTED => $TIME

DIST	COUNTY	ROUTE	POST MILES TOTAL PROJECT	SHEET NO.	TOTAL SHEETS
03	Nev	20	R4.1/R17.4	88	106

REGISTERED CIVIL ENGINEER

April 20, 2012
PLANS APPROVAL DATE

REGISTERED PROFESSIONAL ENGINEER
Roberta L. McLaughlin
No. C40375
Exp. 3-31-13
CIVIL
STATE OF CALIFORNIA

The State of California or its officers or agents shall not be responsible for the accuracy or completeness of electronic copies of this plan sheet.

To accompany plans dated 6-4-12

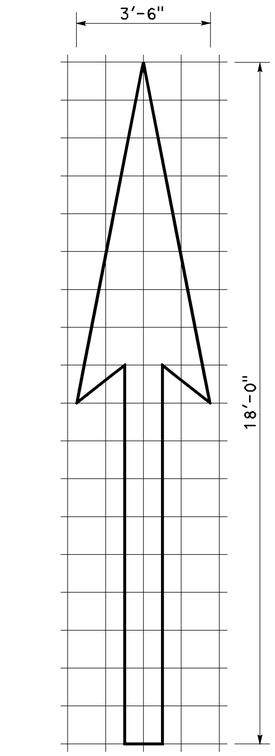

A=25 sq ft

TYPE I 18'-0" ARROW

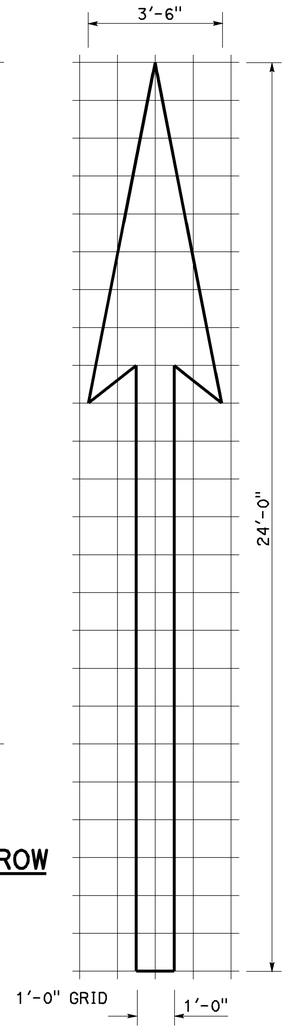

A=31 sq ft

TYPE I 24'-0" ARROW

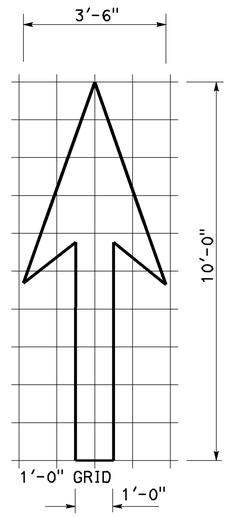

A=14 sq ft

TYPE I 10'-0" ARROW

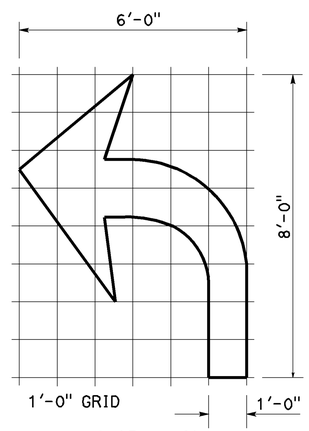

A=15 sq ft

TYPE IV (L) ARROW

(FOR TYPE IV (R) ARROW, USE MIRROR IMAGE)

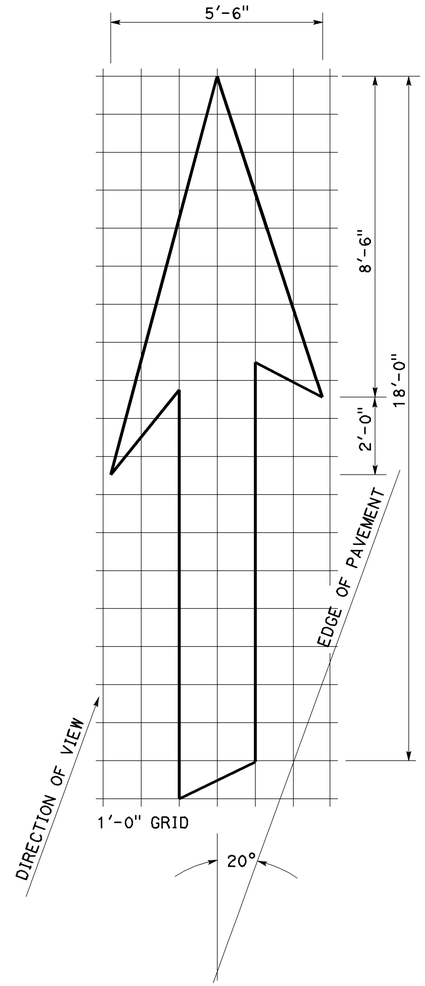

A=42 sq ft

TYPE VI ARROW

RIGHT LANE DROP ARROW
(FOR LEFT LANE, USE MIRROR IMAGE)

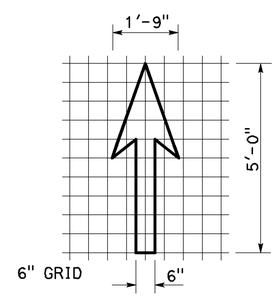

A=3.5 sq ft

BIKE LANE ARROW

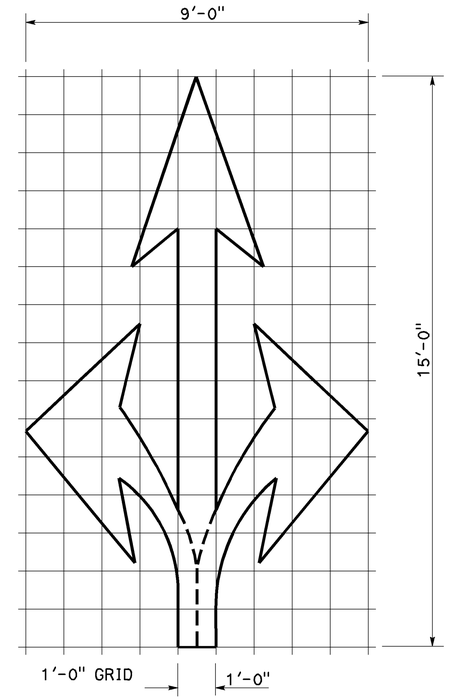

A=36 sq ft

TYPE VIII ARROW

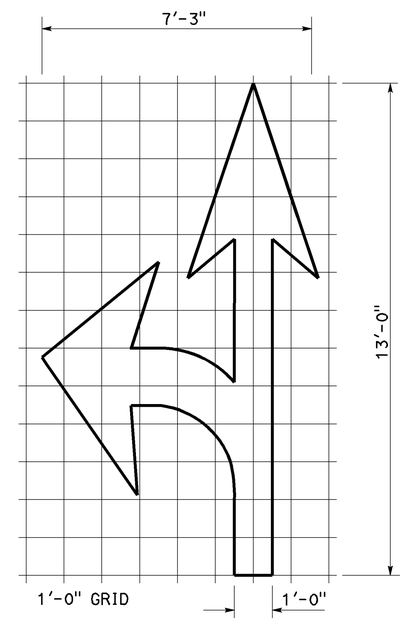

A=27 sq ft

TYPE VII (L) ARROW

(FOR TYPE VII (R) ARROW, USE MIRROR IMAGE)

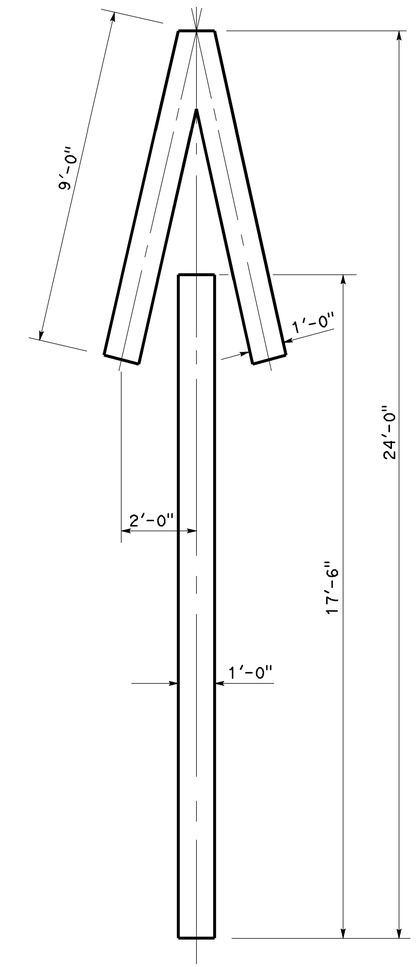

A=33 sq ft

TYPE V ARROW

NOTE:
MINOR VARIATIONS IN DIMENSIONS MAY BE ACCEPTED BY THE ENGINEER.

STATE OF CALIFORNIA
DEPARTMENT OF TRANSPORTATION

PAVEMENT MARKINGS ARROWS

NO SCALE

RSP A24A DATED APRIL 20, 2012 SUPERSEDES STANDARD PLAN A24A DATED MAY 1, 2006 - PAGE 9 OF THE STANDARD PLANS BOOK DATED MAY 2006.

REVISED STANDARD PLAN RSP A24A

2006 REVISED STANDARD PLAN RSP A24A

3-14-12

DIST	COUNTY	ROUTE	POST MILES TOTAL PROJECT	SHEET NO.	TOTAL SHEETS
03	Nev	20	R4.1/R17.4	89	106

REGISTERED CIVIL ENGINEER

July 20, 2012
PLANS APPROVAL DATE

REGISTERED PROFESSIONAL ENGINEER
Roberta L. McLaughlin
No. C40375
Exp. 3-31-13
CIVIL
STATE OF CALIFORNIA

The State of California or its officers or agents shall not be responsible for the accuracy or completeness of electronic copies of this plan sheet.

To accompany plans dated 6-4-12

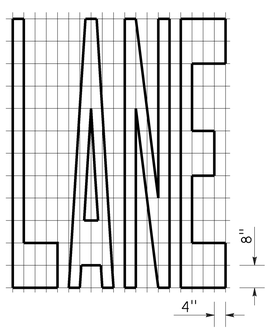

A=24 ft²

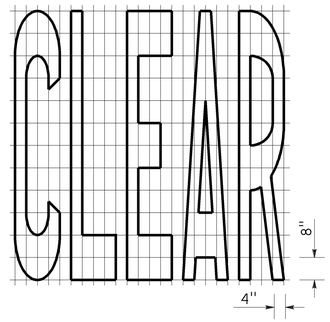

A=27 ft²

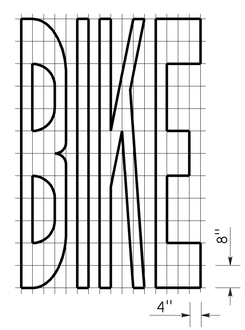

A=21 ft²

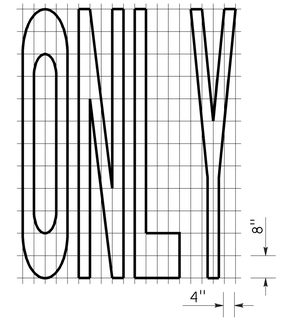

A=22 ft²

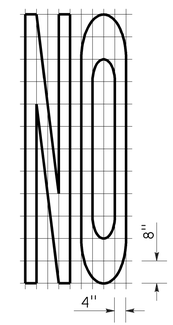

A=14 ft²

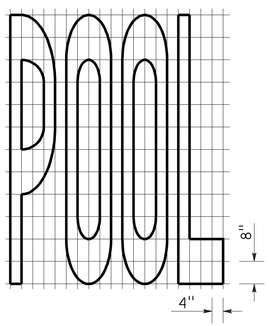

A=23 ft²

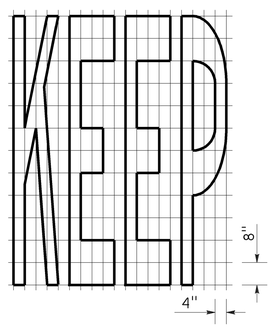

A=24 ft²

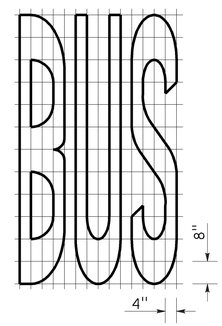

A=20 ft²

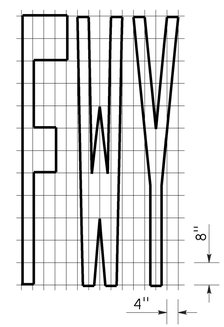

A=16 ft²

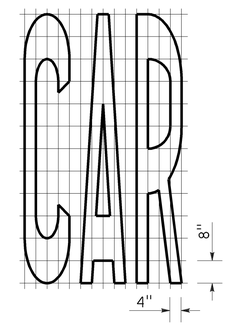

A=17 ft²

WORD MARKINGS			
ITEM	ft²	ITEM	ft²
LANE	24	NO	14
POOL	23	BIKE	21
CAR	17	BUS	20
CLEAR	27	ONLY	22
KEEP	24	FWY	16

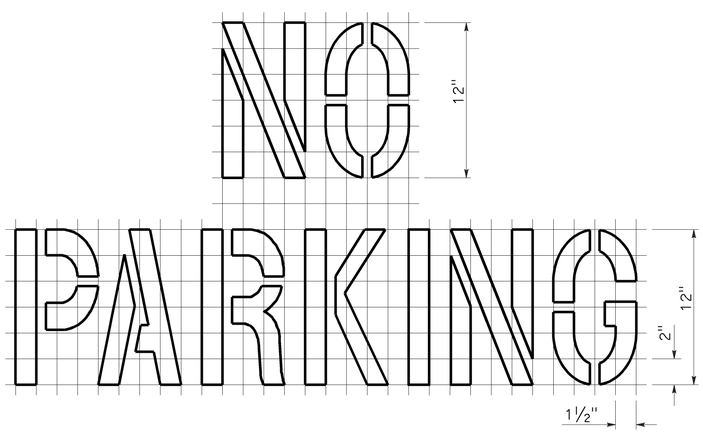

A=2 ft²
See Notes 6 and 7

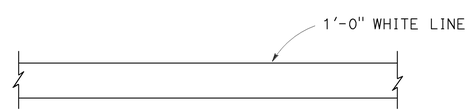

LIMIT LINE (STOP LINE)

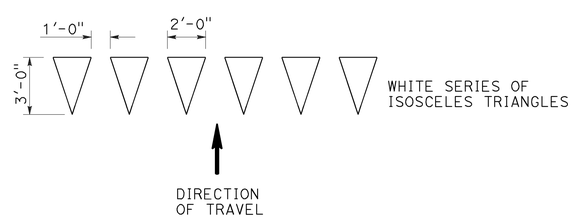

YIELD LINE

1. If a message consists of more than one word, it should read "UP", i.e., the first word should be nearest the driver.
2. The space between words should be at least four times the height of the characters for low speed roads, but not more than ten times the height of the characters. The space may be reduced appropriately where there is limited space because of local conditions.
3. Minor variations in dimensions may be accepted by the Engineer.
4. Portions of a letter, number or symbol may be separated by connecting segments not to exceed 2" in width.
5. The words "NO PARKING" pavement marking is to be used for parking facilities. For typical locations of markings, see Standard Plans A90A and A90B.
6. The words "NO PARKING", shall be painted in white letters no less than 1'-0" high on a contrasting background and located so that it is visible to traffic enforcement officials.

STATE OF CALIFORNIA
DEPARTMENT OF TRANSPORTATION

PAVEMENT MARKINGS
WORDS, LIMIT AND YIELD LINES

NO SCALE

RSP A24E DATED JULY 20, 2012 SUPERSEDES STANDARD PLAN A24E
DATED MAY 1, 2006 - PAGE 13 OF THE STANDARD PLANS BOOK DATED MAY 2006.

REVISED STANDARD PLAN RSP A24E

2006 REVISED STANDARD PLAN RSP A24E

6-12-12

DIST	COUNTY	ROUTE	POST MILES TOTAL PROJECT	SHEET NO.	TOTAL SHEETS
03	Nev	20	R4.1/R17.4	90	106

REGISTERED CIVIL ENGINEER

November 17, 2006
PLANS APPROVAL DATE

REGISTERED PROFESSIONAL ENGINEER Michael Janzen No. 44788 Exp. 03-31-08 CIVIL STATE OF CALIFORNIA

The State of California or its officers or agents shall not be responsible for the accuracy or completeness of electronic copies of this plan sheet.

To accompany plans dated 6-4-12

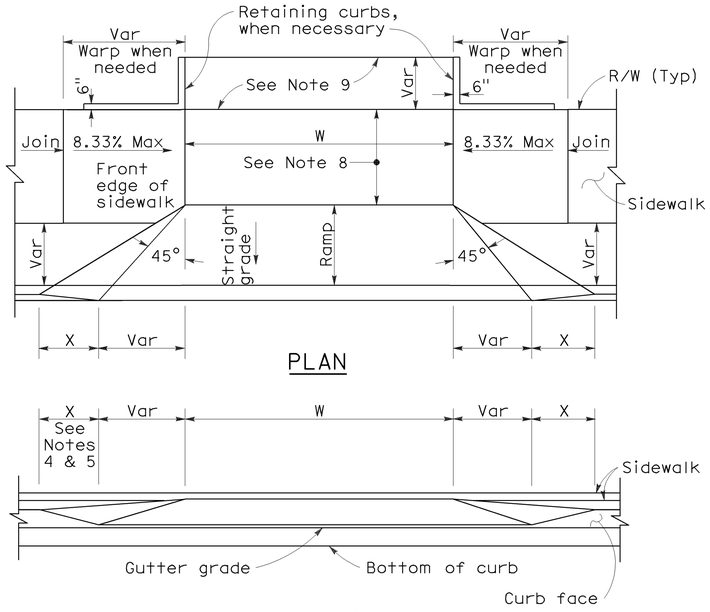

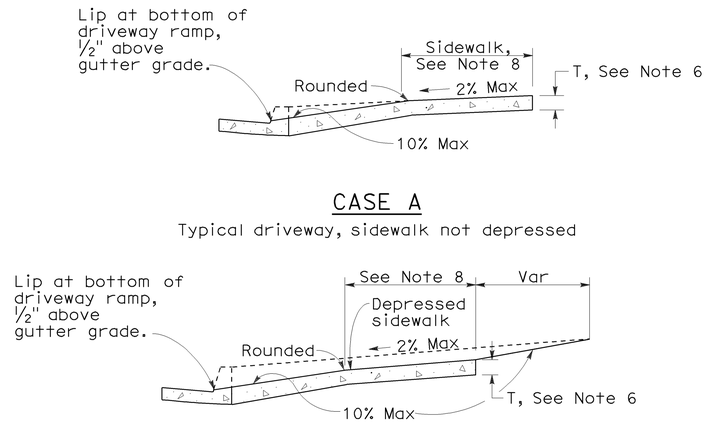

CURB QUANTITIES

TYPE	CUBIC YARDS PER LINEAR FOOT
A1-6	0.02585
A1-8	0.03084
A2-6	0.05903
A2-8	0.06379
A3-6	0.01036
A3-8	0.01435
B1-4	0.02185
B1-6	0.02930
B2-4	0.05515
B2-6	0.06171
B3-4	0.00641
B3-6	0.01074
B4	0.05709
D-4	0.04083
D-6	0.06804
E	0.06661

TABLE A

CURB TYPE	DIMENSIONS "H1"	"H2"	"W1"	"W2"
A1-6	1'-2"	6"	7½"	1½"
A1-8	1'-4"	8"	8"	2"
A2-6	1'-0"	6"	2'-7½"	1½"
A2-8	1'-2"	8"	2'-8"	2"
A3-6	6"	5"	7¼"	1¼"
A3-8	8"	7"	7¾"	1¾"
B1-4	1'-0"	4"	7½"	2½"
B1-6	1'-2"	6"	9"	4"
B2-4	10"	4"	2'-7½"	2½"
B2-6	1'-0"	6"	2'-9"	4"
B3-4	4"	3"	7"	2"
B3-6	6"	5"	8½"	3½"
D-4	10"	4"	1'-6"	1'-1"
D-6	1'-0"	6"	2'-2"	1'-8"

DRIVEWAYS

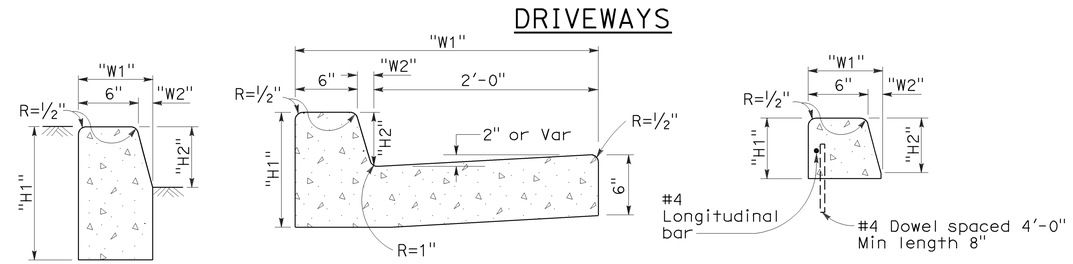

TYPE A1 CURBS
See Table A

TYPE A2 CURBS
See Table A

TYPE A3 CURBS
Superimposed on existing pavement
See Table A

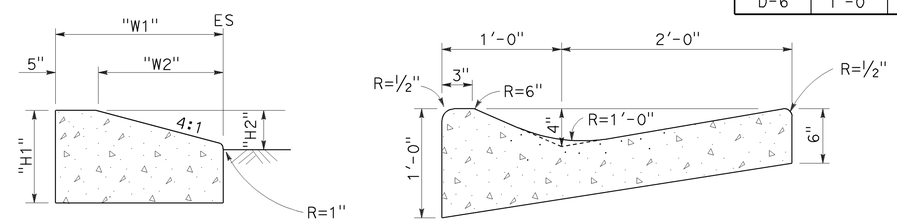

TYPE D CURBS
See Table A

TYPE E CURB

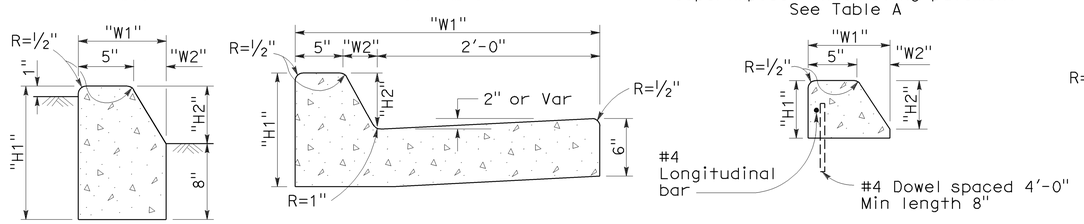

TYPE B1 CURBS
See Table A

TYPE B2 CURBS
See Table A

TYPE B3 CURBS
Superimposed on existing pavement
See Table A

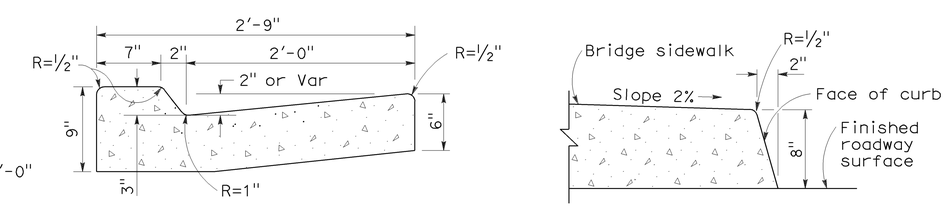

TYPE B4 CURBS

TYPE H CURB
On Bridges

CURBS

NOTES:

1. Case A driveway section typically applies.
2. Use Case B driveway section when ramp slopes would exceed 10% in Case A.
3. Use Case B driveway section when sidewalk cross slope would exceed 2% in Case A.
4. X=3'-0" except for curb heights over 10" where 4:1 slopes shall be used on curb slope.
5. X is a variable when sidewalk is located where wheelchairs may traverse the surface. Slopes shall not exceed 8.33%.
6. Sidewalk and ramp thickness "T" at driveway shall be 4" for residental and 6" for commercial.
7. Difference in slope of the driveway ramp and the slope of a line between the gutter and a point on the roadway 5'-0" from gutter line shall not exceed 15%. Reduce driveway ramp slope, not gutter slope, where required.
8. Minimum width of clear passageway for sidewalk shall be 4'-0".
9. Retaining curbs and acquisition of construction easement may be necessary for narrow sidewalks or curb heights in excess of 6".
10. Across the pedestrian route at curb ramp locations, the gutter pan slope shall not exceed 1" of depth for each 2'-0" of width.

STATE OF CALIFORNIA
DEPARTMENT OF TRANSPORTATION

CURBS AND DRIVEWAYS

NO SCALE

RSP A87A DATED NOVEMBER 17, 2006 SUPERSEDES STANDARD PLAN A87A DATED MAY 1, 2006 - PAGE 113 OF THE STANDARD PLANS BOOK DATED MAY 2006.

REVISED STANDARD PLAN RSP A87A

2006 REVISED STANDARD PLAN RSP A87A

10-25-06

DIST	COUNTY	ROUTE	POST MILES TOTAL PROJECT	SHEET NO.	TOTAL SHEETS
03	Nev	20	R4.1/R17.4	91	106

REGISTERED CIVIL ENGINEER

September 1, 2006
PLANS APPROVAL DATE

REGISTERED PROFESSIONAL ENGINEER Hector David Cordova No. C41957 Exp. 3-31-08 CIVIL STATE OF CALIFORNIA

The State of California or its officers or agents shall not be responsible for the accuracy or completeness of electronic copies of this plan sheet.

To accompany plans dated 6-4-12

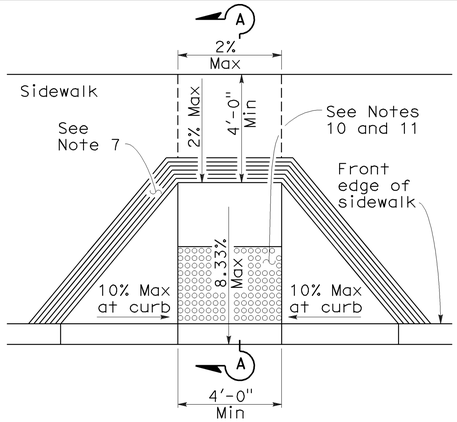

CASE A

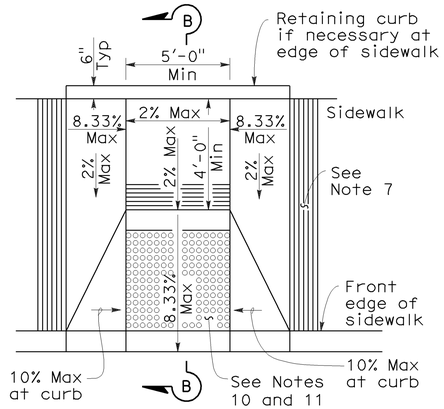

CASE B

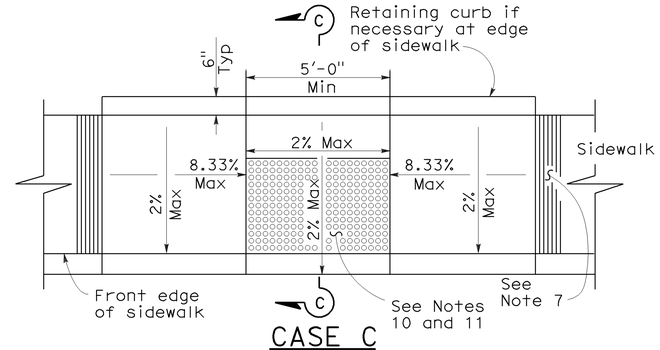

CASE C

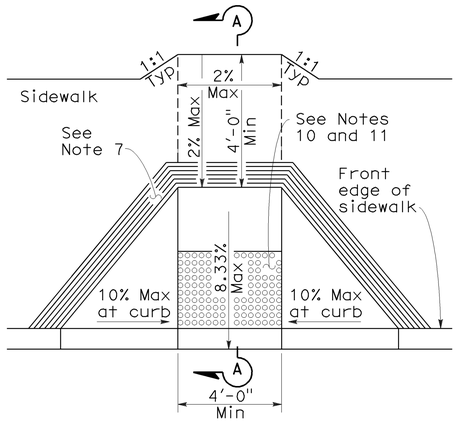

CASE D

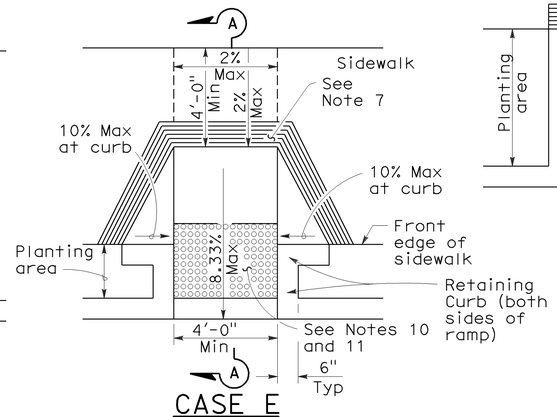

CASE E

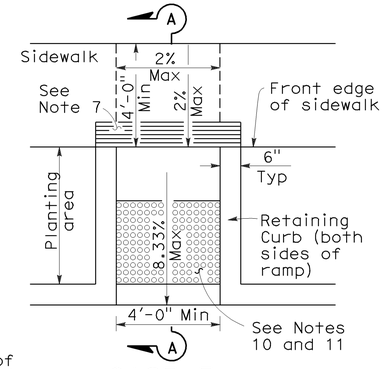

CASE F

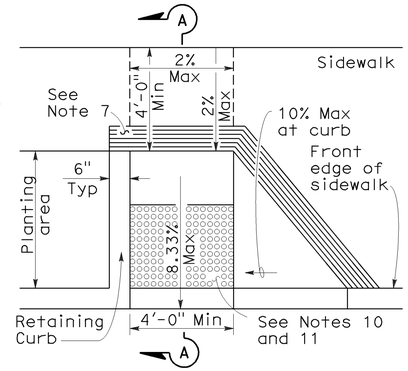

CASE G
See Note 4

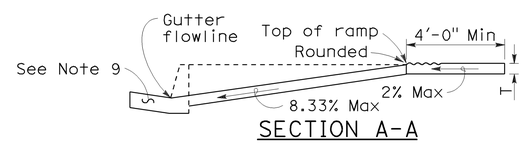

SECTION A-A

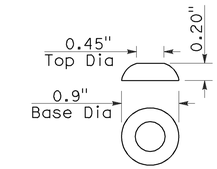

RAISED TRUNCATED DOME

NOTES:

1. As site conditions dictate, Case A through Case G curb ramps may be used for corner installations similar to those shown in Detail A and Detail B. The case of curb ramps used in Detail A do not have to be the same. Case A through Case G curb ramps also may be used at mid block locations, as site conditions dictate.
2. If distance from curb to back of sidewalk is too short to accommodate ramp and 4'-0" platform (landing) as shown in Case A, the sidewalk may be depressed longitudinally as in Case B, or C or may be widened as in Case D.
3. When ramp is located in center of curb return, crosswalk configuration must be similar to that shown for Detail B.
4. As site conditions dictate, the retaining curb side and the flared side of the Case G ramp shall be constructed in reversed position.
5. If located on a curve, the sides of the ramp need not be parallel, but the minimum width of the ramp shall be 4'-0".
6. Side slope of ramp flares vary uniformly from a maximum of 10% at curb to conform with longitudinal sidewalk slope adjacent to top of the ramp, except in Case C and Case F.
7. The curb ramp shall be outlined, as shown, with a 1'-0" wide border with ¼" grooves approximately ¾" on center. See grooving detail.
8. Transitions from ramps and landing to walks, gutters or streets shall be flush and free of abrupt changes.
9. Maximum slopes of adjoining gutters, the road surface immediately adjacent to the curb ramp or accessible route shall not exceed 5 percent within 4'-0" of the top and bottom of the curb ramp.
10. Curb ramps shall have a detectable warning surface that extends the full width and 3'-0" depth of the ramp. Detectable Warning Surfaces shall conform to the details on this plan and the requirements in the Special Provisions.
11. The edge of the detectable warning surface nearest the street shall be between 6" and 8" from the gutter flowline.
12. Sidewalk and ramp thickness, "T", shall be 3½" minimum.
13. Utility pull boxes, manholes, vaults and all other utility facilities within the boundaries of the curb ramp will be relocated or adjusted to grade by the owner prior to, or in conjunction with, curb ramp construction.
14. For retrofit conditions, removal and replacement of curb apron will be at the Contractor's option, unless otherwise shown on project plans.

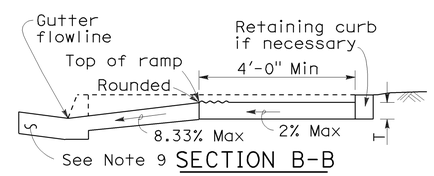

SECTION B-B
Depress entire sidewalk as required

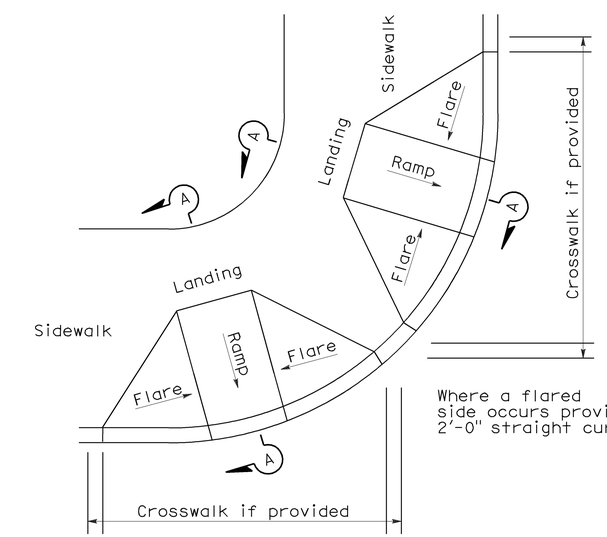

DETAIL A
TYPICAL TWO-RAMP CORNER INSTALLATION
See Note 1

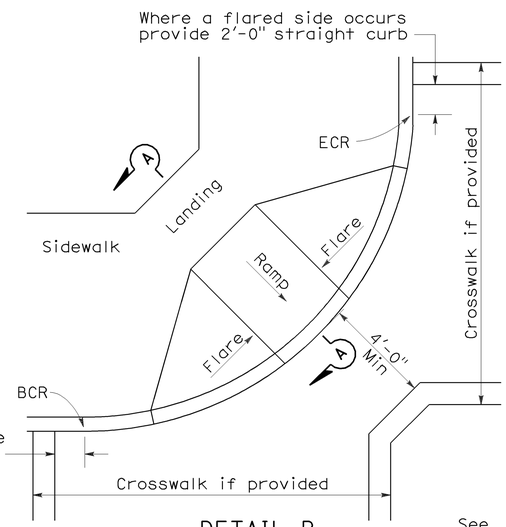

DETAIL B
TYPICAL ONE-RAMP CORNER INSTALLATION
See Notes 1 and 3

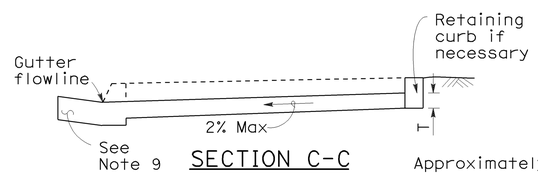

SECTION C-C

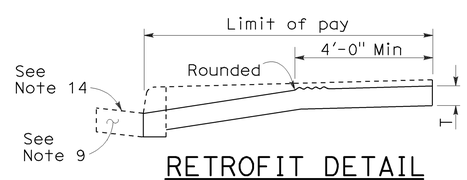

RETROFIT DETAIL
Existing curb and sidewalk

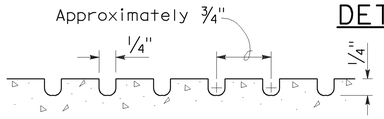

GROOVING DETAIL

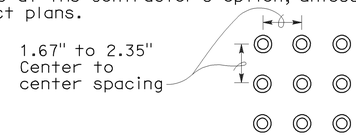

RAISED TRUNCATED DOME PATTERN (IN-LINE)
DETECTABLE WARNING SURFACE
See Note 10

STATE OF CALIFORNIA
DEPARTMENT OF TRANSPORTATION

CURB RAMP DETAILS

NO SCALE

RSP A88A DATED SEPTEMBER 1, 2006 SUPERSEDES STANDARD PLAN A88A
DATED MAY 1, 2006 - PAGE 115 OF THE STANDARD PLANS BOOK DATED MAY 2006.

REVISED STANDARD PLAN RSP A88A

2006 REVISED STANDARD PLAN RSP A88A

8-3-06

DIST	COUNTY	ROUTE	POST MILES TOTAL PROJECT	SHEET NO.	TOTAL SHEETS
03	Nev	20	R4.1/R17.4	92	106

Raymond Don Tsztoo
REGISTERED CIVIL ENGINEER

January 18, 2008
PLANS APPROVAL DATE

REGISTERED PROFESSIONAL ENGINEER
Raymond Don Tsztoo
No. C37332
Exp. 6-30-08
CIVIL
STATE OF CALIFORNIA

The State of California or its officers or agents shall not be responsible for the accuracy or completeness of electronic copies of this plan sheet.

To accompany plans dated 6-4-12

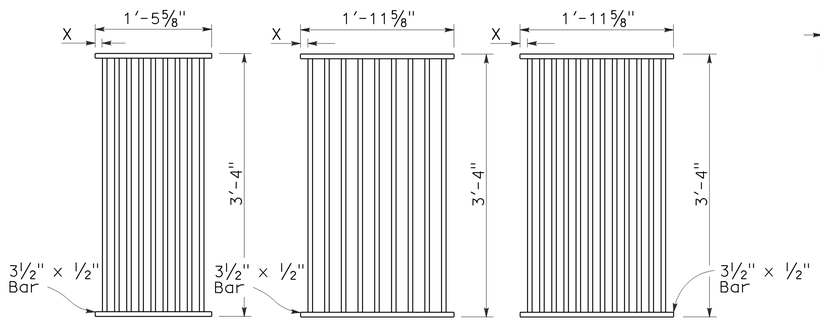

TYPE 18-9

1⅜" Clear spacing. Use within the roadbed on highways where bicycles and pedestrians are excluded.

TYPE 24-9

2" Clear spacing. Use in locations off the roadbed on all types of highways.

TYPE 24-12

1⅜" Clear spacing. Use within the roadbed on highways where bicycles and pedestrians are excluded.

RECTANGULAR GRATE DETAILS

(See table below)

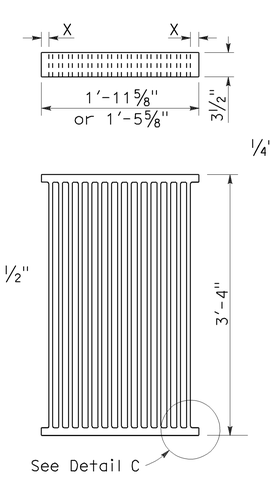

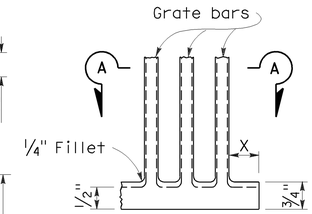

DETAIL C

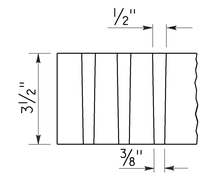

SECTION A-A

ALTERNATIVE CAST NODULAR IRON GRATE OR CAST STEEL GRATE

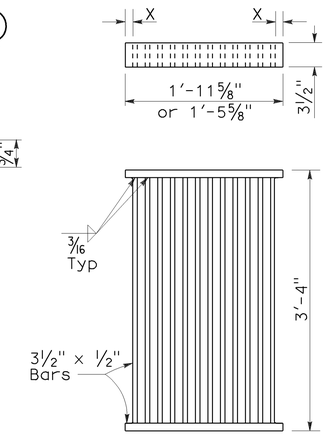

ALTERNATIVE WELDED GRATE

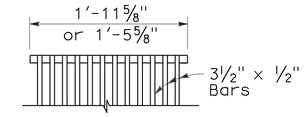

CAST END BLOCK

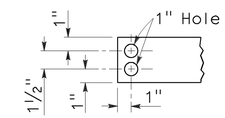

END OF BAR

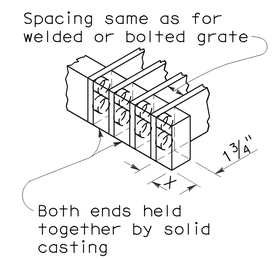

ALTERNATIVE CAST NODULAR IRON OR CAST STEEL END BLOCK GRATE

NOTES:

1. Grate type numbers refer to approximate width of grate in inches and number of bars, respectively.
2. Contractor has the option of using cast nodular iron, cast steel, welded, bolted, or cast end block grate.
3. See Special Provisions for requirements pertaining to galvanizing or asphalt dipping of grates and frames.
4. Rounded top of bars optional on all grates.
5. Pipe inlets with a grate shall be placed so that bars parallel direction of principle surface flow.
6. Full penetration butt welds may be substituted for the fillet welds on all anchors.
7. Standard square, hexagon, round or equivalent headed anchors may be substituted for the right angle hooks on the anchors shown on this plan.
8. Grate and frame weights are based on welded grates (weights of face angles, steps, protection bars, etc. are not included).

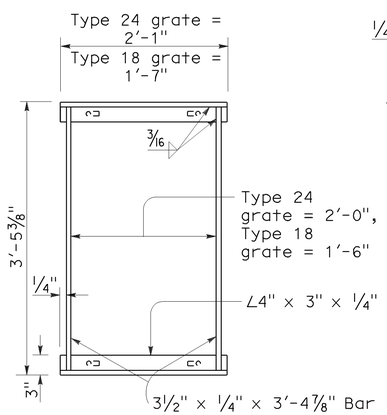

TYPICAL FRAME

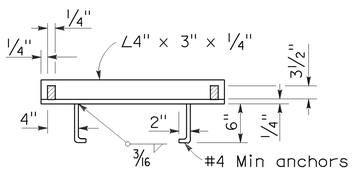

CROSS SECTION

(Thru frame)

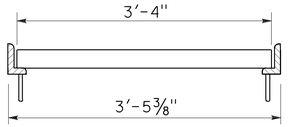

LONGITUDINAL SECTION

(Thru frame and grate)

RECTANGULAR FRAME DETAILS

(For all rectangular grates)

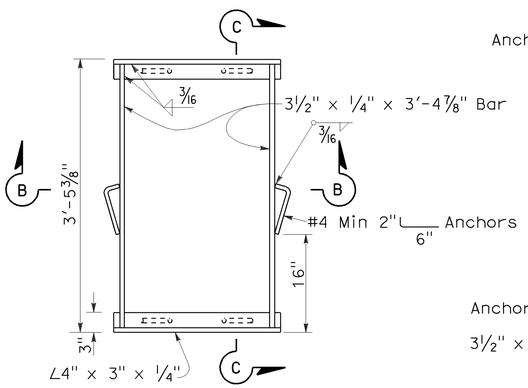

TYPICAL FRAME

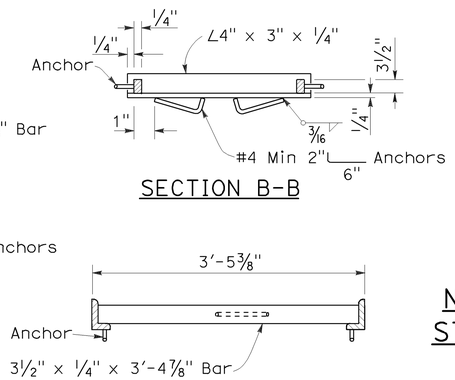

SECTION B-B

SECTION C-C

ALTERNATIVE ANCHOR FOR RECTANGULAR FRAME

(For details not shown, See Rectangular Frame Details)

INLET TYPE	GRATE TYPE	No. OF GRATES	WEIGHT LB
GDO	24-12	2	634
GOL-7	24-12	1	326
GOL-10	24-12	1	326
GO,G1,G2,G3,G4 (TYPE 24)	24-9	1	263
	24-12	1	326
G4 (TYPE 18),G5,G6	18-9	1	249
GT1	18-9	2	498
GT2	18-9	2	498
GT3	24-12	2	652
GT4	24-12	2	652
TRASH RACK			22

INLET TYPE	COVER TYPE	WEIGHT LB
OS	PLATE	174
OL-7	PLATE	170
OL-10	PLATE	170
OL-14	PLATE	170
OL-21	PLATE	170
OCP	PLATE	112
OCPI	PLATE	112
OCPI	REDWOOD	42
OMP	PLATE	177
OMPI	PLATE	177

BASIS FOR MISC IRON & STEEL FINAL PAY WEIGHTS FOR DRAINAGE INLETS

(See General Notes, No 8)

GRATE BAR SPACING TABLE

TYPE	No. OF BARS	CLEAR BAR SPACING	X
18-9	9	1⅜"	1 1/16"
24-9	9	2"	1 9/16"
24-12	12	1⅜"	1¼"

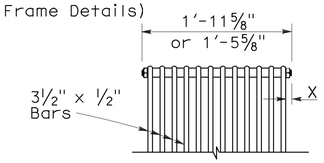

BOLTED END BLOCK

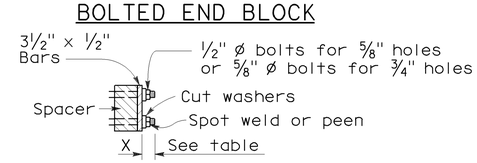

BOLTING DETAIL

ALTERNATIVE BOLTED GRATE

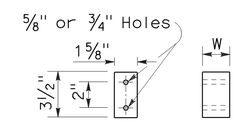

BAR SPACER

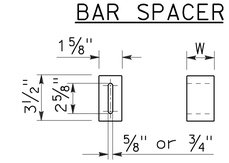

ALTERNATIVE SPACER

W = 1⅜" or 2"

STATE OF CALIFORNIA
DEPARTMENT OF TRANSPORTATION

GRATE DETAILS

NO SCALE

RSP D77A DATED JANUARY 18, 2008 SUPERSEDES STANDARD PLAN D77A
DATED MAY 1, 2006 - PAGE 155 OF THE STANDARD PLANS BOOK DATED MAY 2006.

REVISED STANDARD PLAN RSP D77A

2006 REVISED STANDARD PLAN RSP D77A

12-14-07

DIST	COUNTY	ROUTE	POST MILES TOTAL PROJECT	SHEET NO.	TOTAL SHEETS
03	Nev	20	R4.1/R17.4	93	106

Raymond Don Tsztoo
REGISTERED CIVIL ENGINEER

July 20, 2012
PLANS APPROVAL DATE

REGISTERED PROFESSIONAL ENGINEER Raymond Don Tsztoo No. C37332 Exp. 6-30-14 CIVIL STATE OF CALIFORNIA

The State of California or its officers or agents shall not be responsible for the accuracy or completeness of electronic copies of this plan sheet.

To accompany plans dated 6-4-12

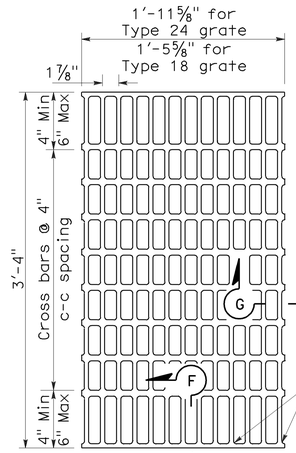

NOTES:

Bearing bars to be 3½" x ¼" bars on 1⅞" centers.

⅜"± ø Cross bars may be fillet welded, resistance welded or electroforged to bearing bars.

Weight of Type 24 grate = 141 LBS.

Weight of Type 18 grate = 107 LBS. (Type 24 grate shown).

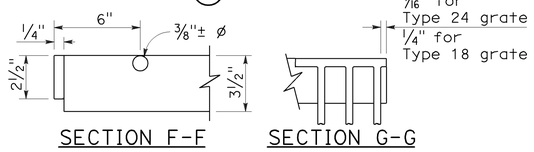

SECTION F-F SECTION G-G

TYPE 18-10 AND 24-13 GRATE

(Welded Steel)

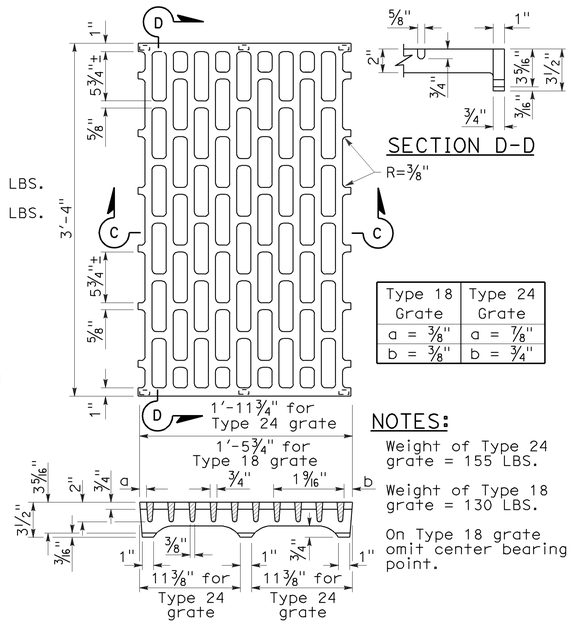

Type 18 Grate	Type 24 Grate
a = ⅜"	a = ⅞"
b = ⅜"	b = ¾"

SECTION D-D

NOTES:

Weight of Type 24 grate = 155 LBS.

Weight of Type 18 grate = 130 LBS.

On Type 18 grate omit center bearing point.

SECTION C-C

TYPE 18-8C AND 24-10C GRATE

(Cast ductile iron)

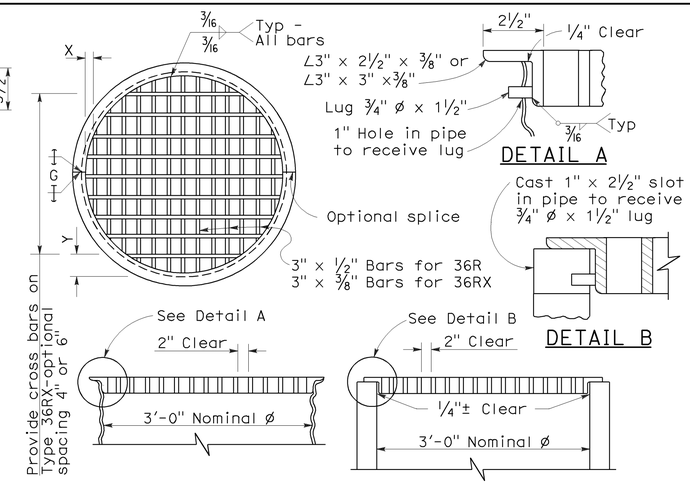

DETAIL A DETAIL B

TYPE 36R AND 36RX GRATE DETAILS

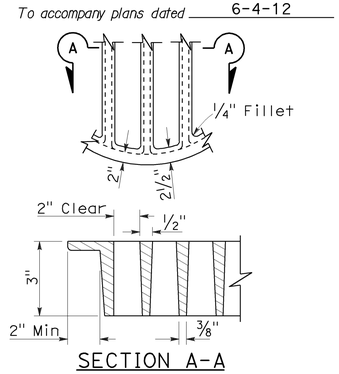

SECTION A-A

ALTERNATIVE CAST DUCTILE IRON GRATE OR CAST CARBON STEEL GRATE TYPE 36R AND 36RX

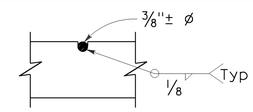

⅜"± ø Cross bars may be fillet welded, resistance welded or electroforged to bearing bars.

CROSS BAR DETAIL TYPE 36RX GRATE (WELDED STEEL)

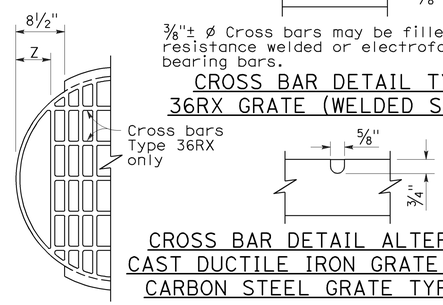

CROSS BAR DETAIL ALTERNATIVE CAST DUCTILE IRON GRATE OR CAST CARBON STEEL GRATE TYPE 36RX

MODIFIED TYPE 36R AND 36RX GRATE FOR ODI INLET

NOTES:

1. When alternative grates are allowed - Final pay based on alternative with the lesser weight.
2. Use frame shown on Standard Plan D74A, RSP D74B or RSP D77A as appropriate.
3. When Type 24-10S, 24-12X or 24-13 grates are used with GDO Inlets, a ¼" x 3½" x 3'-4⅞" steel bar shall be welded across the center of inlet frame to separate the individual grates.
4. See Revised Standard Plan RSP D77A for connecting chain to welded grate and frame. When chain is required, do not use cast ductile iron grate.

BASIS FOR Misc IRON AND STEEL FINAL PAY WEIGHTS FOR DRAINAGE INLETS

INLET TYPE	GRATE TYPE	No. OF GRATES	WEIGHT LB
GDO (SEE NOTE 4)	24-10C	2	391
	24-10S	2	456
	24-12X	2	473
	24-13	2	374
GO,GOL,G1,G2, G3,G4 (TYPE 24)	24-10C	1	202
	24-10S	1	229
	24-12X	1	239
	24-13	1	188
G4 (TYPE 18) G5,G6	18-8S	1	187
	18-9X	1	187
	18-10	1	149
GT1,GT2	18-8S	2	374
	18-9X	2	374
	18-10	2	298
GT3,GT4	24-10C	2	404
	24-10S	2	458
	24-12X	2	478
	24-13	2	376
ODI	36RX (Mod)	1	196
GMP,GCP,GCPI	36RX	1	215
ODI	36R (Mod)	1	220
GMP,GCP,GCPI	36R	1	236
TRASH RACK			22
GRATE CHAIN			3

GRATE BAR SPACING TABLE

TYPE	No. OF BARS	CLEAR BAR SPACING	X	Y 4" SPACING	Y 6" SPACING	Z
36R	13	2"	2⅛"	-	-	-
36RX (Steel)	15	2"	9/16"	3¾"	5¾"	-
36RX (Cast)	13	2"	2⅛"	3¾"	5¾"	-
36R Mod	12	2"	2⅛"	-	-	5"
36RX Mod (Steel)	13	2"	9/16"	3¾"	5¾"	5 11/16"
36RX Mod (Cast)	12	2"	2⅛"	3¾"	5¾"	5"

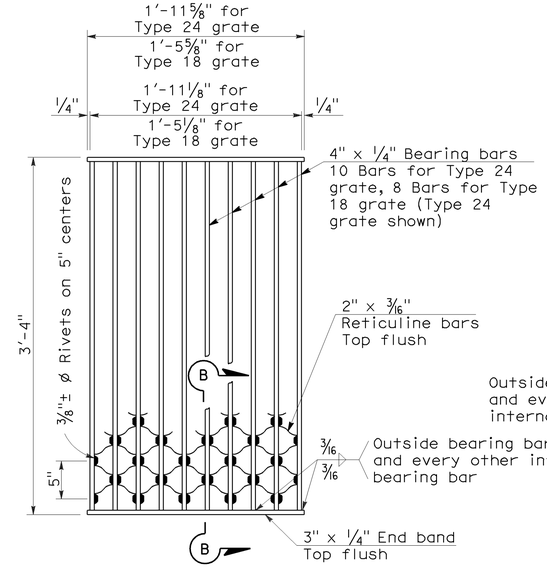

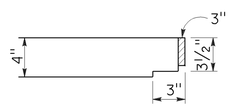

NOTES:

Weight of Type 24 grate = 182 LBS.
Weight of Type 18 grate = 145 LBS.

SECTION B-B

TYPE 18-8S AND 24-10S GRATE

(Welded Steel) Reticuline type

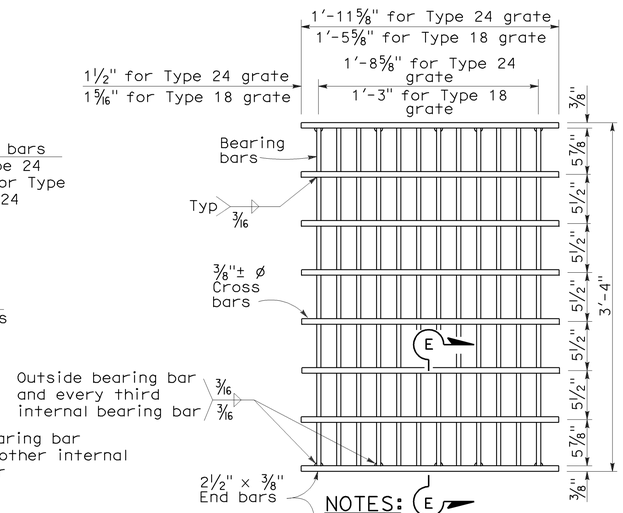

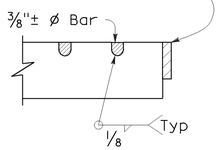

SECTION E-E

NOTES:

Bearing bars to be 3½" x ⅜" bars on 1⅞" centers.

12 Bars for Type 24 grate - 9 bars for Type 18 grates. (Type 24 grate shown).

Weight of Type 24 grate = 192 LBS.

Weight of Type 18 grate = 145 LBS.

⅜"± ø Cross bars may be fillet welded, resistance welded or electroforged to bearing bars.

TYPE 18-9X AND 24-12X GRATE

(Welded Steel)

STATE OF CALIFORNIA
DEPARTMENT OF TRANSPORTATION

BICYCLE TRAVERSABLE GRATE DETAILS

NO SCALE

RSP D77B DATE JULY 20, 2012 SUPERSEDES STANDARD PLAN D77B
DATED MAY 1, 2006 - PAGE 156 OF THE STANDARD PLANS BOOK DATED MAY 2006.

REVISED STANDARD PLAN RSP D77B

2006 REVISED STANDARD PLAN RSP D77B

4-24-12

DIST	COUNTY	ROUTE	POST MILES TOTAL PROJECT	SHEET NO.	TOTAL SHEETS
03	Nev	20	R4.1/R17.4	94	106

Randell D. Hiatt
REGISTERED CIVIL ENGINEER

June 6, 2008
PLANS APPROVAL DATE

REGISTERED PROFESSIONAL ENGINEER
Randell D. Hiatt
No. C50200
Exp. 6-30-09
CIVIL
STATE OF CALIFORNIA

The State of California or its officers or agents shall not be responsible for the accuracy or completeness of electronic copies of this plan sheet.

To accompany plans dated 6-4-12

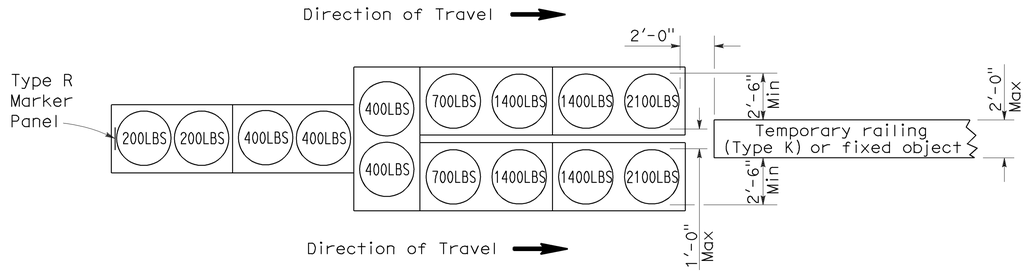

ARRAY 'TU14'

Approach speed 45 mph or more

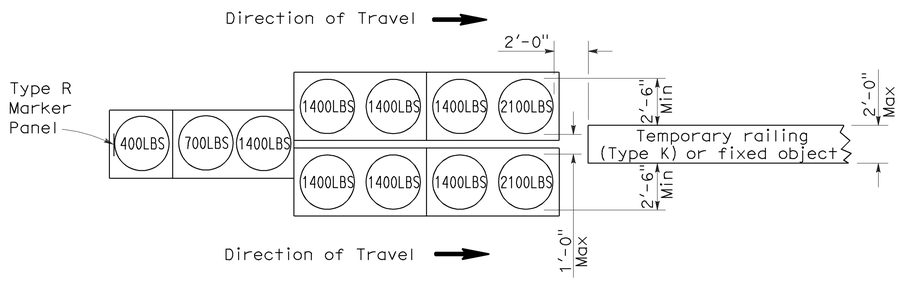

ARRAY 'TU11'

Approach speed less than 45 mph

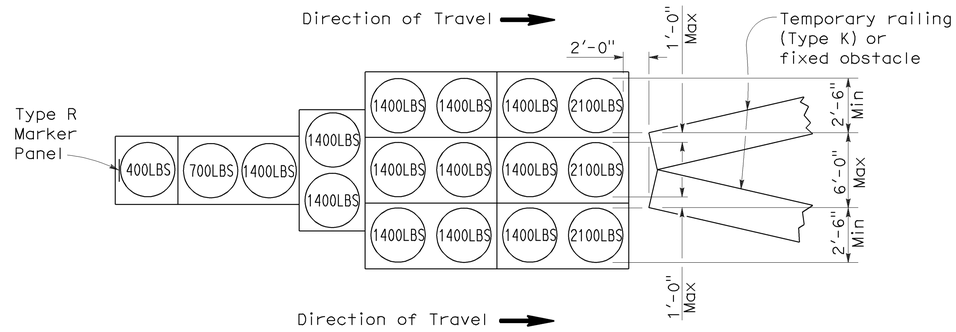

ARRAY 'TU17'

Approach speed less than 45 mph

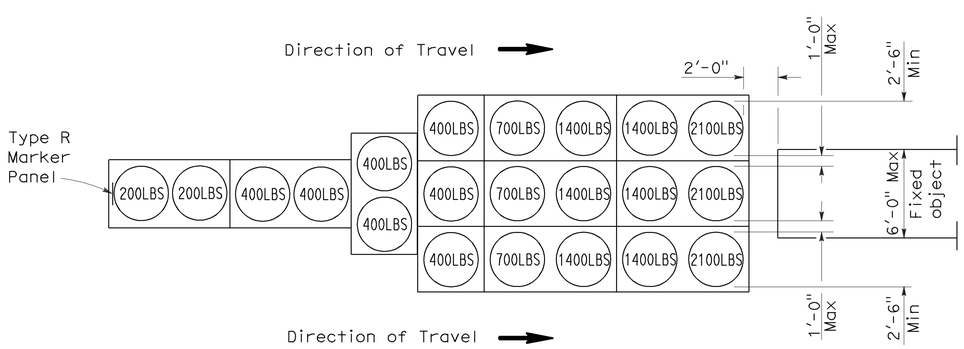

ARRAY 'TU21'

Approach speed 45 mph or more

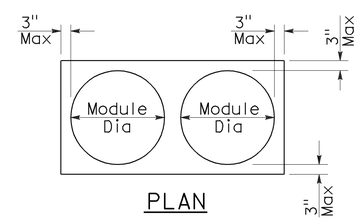

PLAN

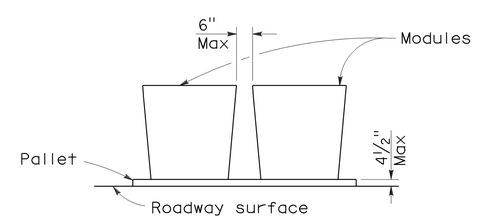

ELEVATION

CRASH CUSHION PALLET DETAIL

See Note 7

NOTES:

1. (XXX) Indicates sand filled module location and weight of sand in pounds for each module. Module spacing is based on the greater diameter of the module.
2. All sand weights are nominal.
3. Temporary crash cushion arrays shall not encroach on the traveled way.
4. Place the top of Type R marker panel 1" below the module lid.
5. Refer to Standard Plan A73B for marker details.
6. Approach speeds indicated conform to NCHRP 350 Report criteria.
7. Use of pallets is optional.

STATE OF CALIFORNIA
DEPARTMENT OF TRANSPORTATION

TEMPORARY CRASH CUSHION, SAND FILLED (UNIDIRECTIONAL)

NO SCALE

RSP T1A DATED JUNE 6, 2008 SUPERSEDES STANDARD PLAN T1A
DATED MAY 1, 2006 - PAGE 211 OF THE STANDARD PLANS BOOK DATED MAY 2006.

REVISED STANDARD PLAN RSP T1A

2006 REVISED STANDARD PLAN RSP T1A

DIST	COUNTY	ROUTE	POST MILES TOTAL PROJECT	SHEET NO.	TOTAL SHEETS
03	Nev	20	R4.1/R17.4	95	106

Randell D. Hiatt
REGISTERED CIVIL ENGINEER

June 6, 2008
PLANS APPROVAL DATE

REGISTERED PROFESSIONAL ENGINEER
Randell D. Hiatt
No. C50200
Exp. 6-30-09
CIVIL
STATE OF CALIFORNIA

The State of California or its officers or agents shall not be responsible for the accuracy or completeness of electronic copies of this plan sheet.

To accompany plans dated 6-4-12

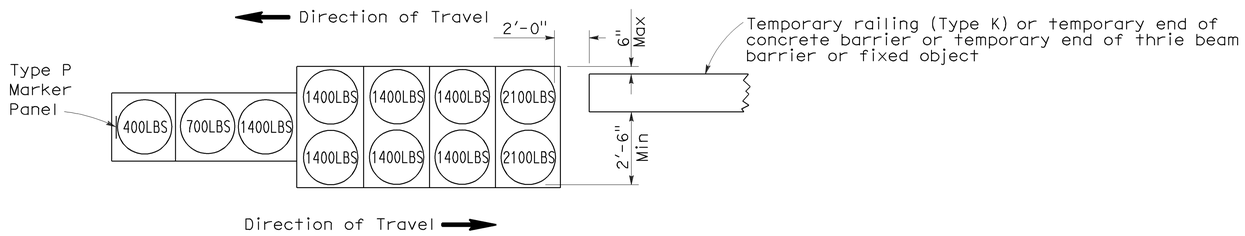

ARRAY 'TB11'

Approach speed less than 45 mph

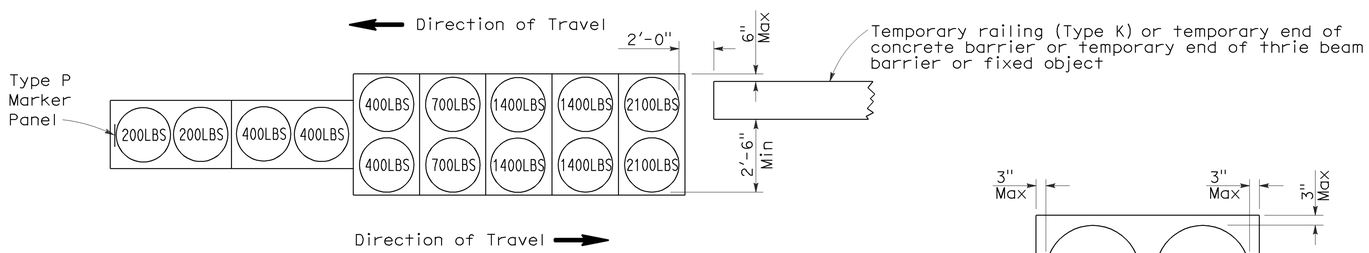

ARRAY 'TB14'

Approach speed 45 mph or more

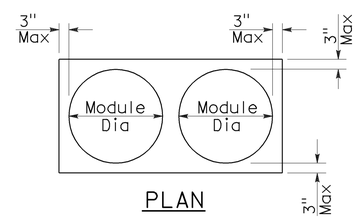

PLAN

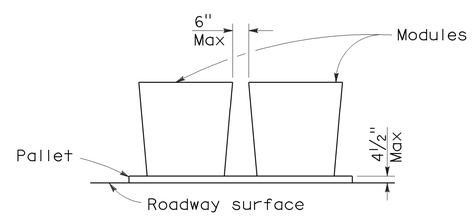

ELEVATION

CRASH CUSHION PALLET DETAIL

See Note 7

NOTES:

1. (XXX) Indicates sand filled module location and weight of sand in pounds for each module. Module spacing is based on the greater diameter of the module.
2. All sand weights are nominal.
3. Temporary crash cushion arrays shall not encroach on the traveled way.
4. Place the Type P marker panel so that the bottom of the panel rests upon the pallet.
5. Refer to Standard Plan A73B for marker details.
6. Approach speeds indicated conform to NCHRP 350 Report criteria.
7. Use of pallets is optional.

STATE OF CALIFORNIA
DEPARTMENT OF TRANSPORTATION

TEMPORARY CRASH CUSHION, SAND FILLED (BIDIRECTIONAL)

NO SCALE

RSP T1B DATED JUNE 6, 2008 SUPERSEDES STANDARD PLAN T1B
DATED MAY 1, 2006 - PAGE 212 OF THE STANDARD PLANS BOOK DATED MAY 2006.

REVISED STANDARD PLAN RSP T1B

2006 REVISED STANDARD PLAN RSP T1B

5-15-08

DIST	COUNTY	ROUTE	POST MILES TOTAL PROJECT	SHEET NO.	TOTAL SHEETS
03	Nev	20	R4.1/R17.4	96	106

Randell D. Hiatt
REGISTERED CIVIL ENGINEER

June 6, 2008
PLANS APPROVAL DATE

REGISTERED PROFESSIONAL ENGINEER
Randell D. Hiatt
No. C50200
Exp. 6-30-09
CIVIL
STATE OF CALIFORNIA

The State of California or its officers or agents shall not be responsible for the accuracy or completeness of electronic copies of this plan sheet.

To accompany plans dated 6-4-12

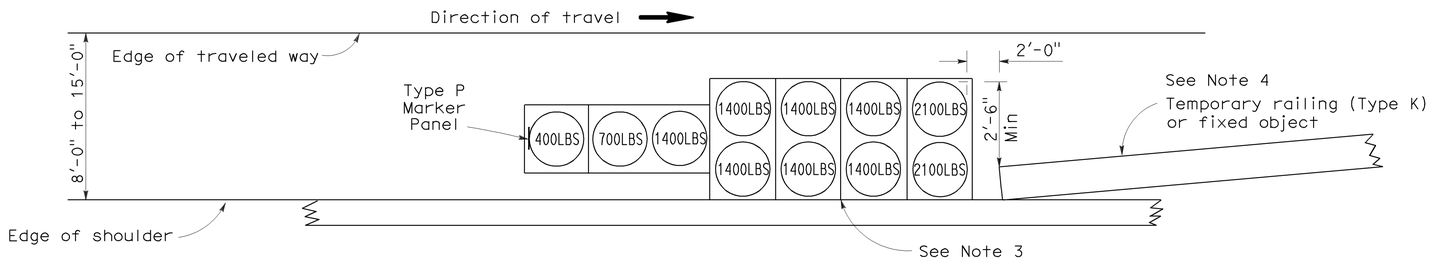

ARRAY 'TS11'

Approach speed less than 45 mph
See Note 9

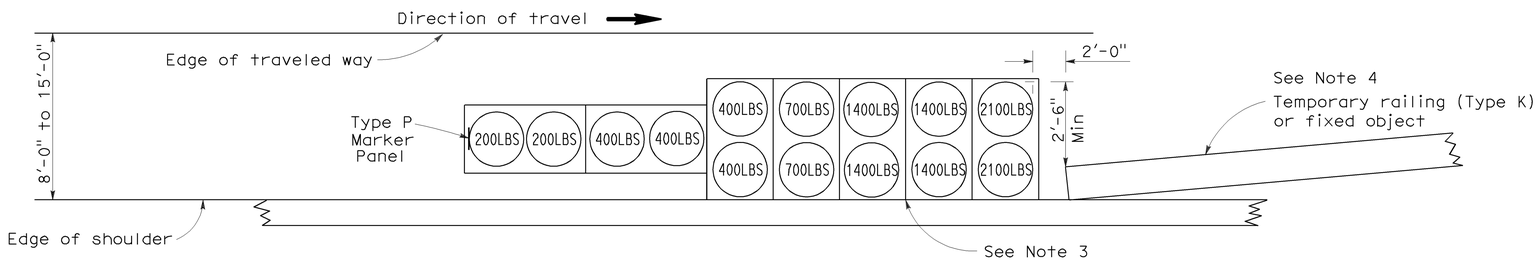

ARRAY 'TS14'

Approach speed 45 mph or more
See Note 9

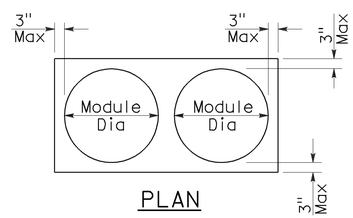

PLAN

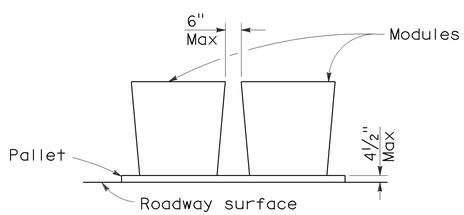

ELEVATION

CRASH CUSHION PALLET DETAIL

See Note 11

NOTES:

1. (XXX) Indicates sand filled module location and weight of sand in pounds for each module. Module spacing is based on the greater diameter of the module.
2. All sand weights are nominal.
3. The temporary crash cushion arrays shown on this plan shall be used only in locations where there will be traffic on one side of the temporary crash cushion array.
4. If the fixed object or approach end of the temporary railing is less than 15'-0" from the edge of traveled way, a temporary crash cushion is required in a construction or work zone.
5. Temporary crash cushion arrays shall not encroach on the traveled way.
6. Arrays for median shoulders shall conform to details shown on this plan for outside shoulders.
7. Place the Type P marker panel so that the bottom of the panel rests upon the pallet and faces traffic.
8. Refer to Standard Plan A73B for marker details.
9. For shoulder widths less than 8'-0", appropriate approved crash cushion protection, other than sand filled modules, shall be provided at fixed objects and at approach ends of temporary railing. The specific type of crash cushion shall be as shown on the project plans or as specified in the Special Provisions, or if not shown on the project plans or specified in the Special Provisions, shall be as approved by the Engineer.
10. Approach speeds indicated conform to NCHRP 350 Report criteria.
11. Use of pallets is optional.

STATE OF CALIFORNIA
DEPARTMENT OF TRANSPORTATION

TEMPORARY CRASH CUSHION, SAND FILLED (SHOULDER INSTALLATIONS)

NO SCALE

RSP T2 DATED JUNE 6, 2008 SUPERSEDES STANDARD PLAN T2
DATED MAY 1, 2006 - PAGE 213 OF THE STANDARD PLANS BOOK DATED MAY 2006.

REVISED STANDARD PLAN RSP T2

2006 REVISED STANDARD PLAN RSP T2

5-15-08

Dist	COUNTY	ROUTE	POST MILES TOTAL PROJECT	SHEET No.	TOTAL SHEETS
03	Nev	20	R4.1/R17.4	97	106

Randell D. Hiatt
REGISTERED CIVIL ENGINEER

May 20, 2011
PLANS APPROVAL DATE

REGISTERED PROFESSIONAL ENGINEER
Randell D. Hiatt
No. C50200
Exp. 6-30-11
CIVIL
STATE OF CALIFORNIA

The State of California or its officers or agents shall not be responsible for the accuracy or completeness of electronic copies of this plan sheet.

To accompany plans dated 6-4-12

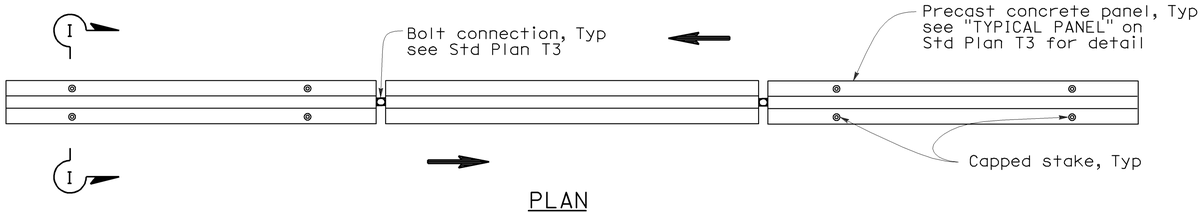

PLAN

RAILING STAKING CONFIGURATION FOR TWO-WAY TRAFFIC

See Note 1

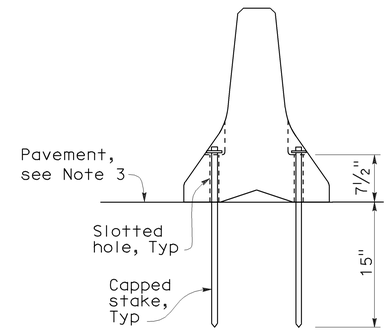

SECTION I-I

NOTES:

1. Where Type K Temporary Railing is placed as a temporary or long term barrier in two-way traffic on highways with less than 24" from the edge of traveled way, use four capped stakes per every other panel with end panels staked.
2. Where Type K Temporary Railing is placed 3" to 24" from the edge of an excavation on highways, use two capped stakes per panel along the traffic side.
3. Staked Type K Temporary Railing must be supported by at least 4" thick concrete, hot mix asphalt or existing asphalt concrete pavement.
4. The minimum yield strength for the washer must be 60,000 psi.
5. Direction of adjacent traffic indicated by ⟹.

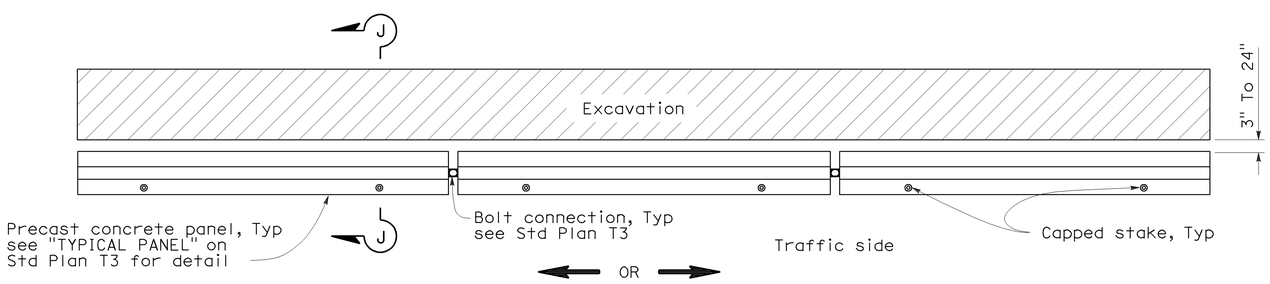

PLAN

RAILING STAKING CONFIGURATION ADJACENT TO AN EXCAVATION

See Note 2

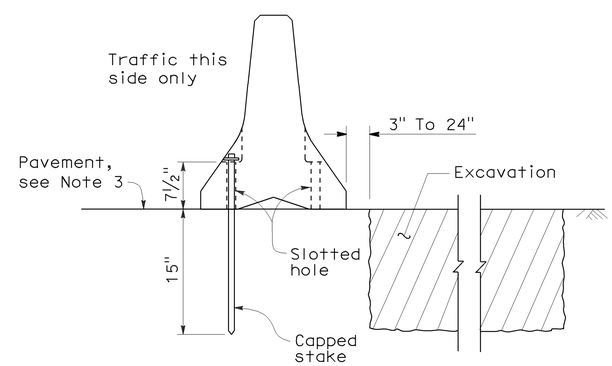

SECTION J-J

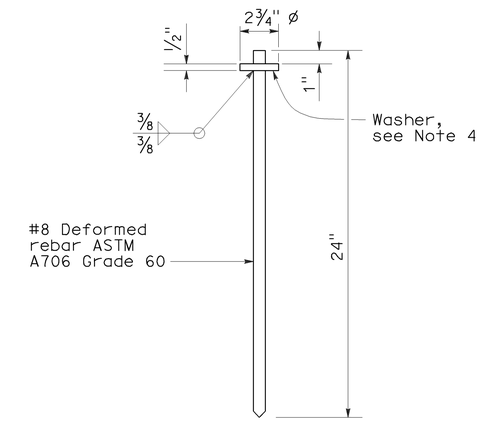

CAPPED STAKE DETAIL

STATE OF CALIFORNIA
DEPARTMENT OF TRANSPORTATION

TEMPORARY RAILING (TYPE K)

NO SCALE

NSP T3A DATED MAY 20, 2011 SUPPLEMENTS
THE STANDARD PLANS BOOK DATED MAY 2006.

NEW STANDARD PLAN NSP T3A

2006 NEW STANDARD PLAN NSP T3A

DIST	COUNTY	ROUTE	POST MILES TOTAL PROJECT	SHEET NO.	TOTAL SHEETS
03	Nev	20	R4.1/R17.4	98	106

LICENSED LANDSCAPE ARCHITECT

August 15, 2008
PLANS Approval DATE

The State of California or its officers or agents shall not be responsible for the accuracy or completeness of electronic copies of this plan sheet.

LICENSED LANDSCAPE ARCHITECT — Robert B. Schott — Signature — 11-04-08 Renewal Date — 08-11-08 Date — STATE OF CALIFORNIA

To accompany plans dated 6-4-12

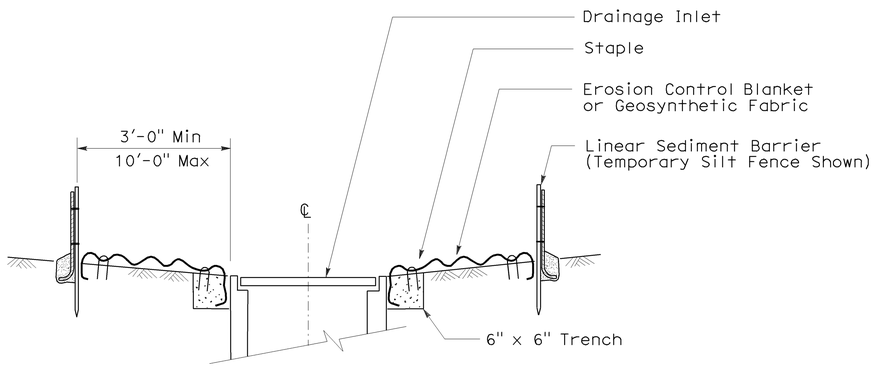

SECTION A-A

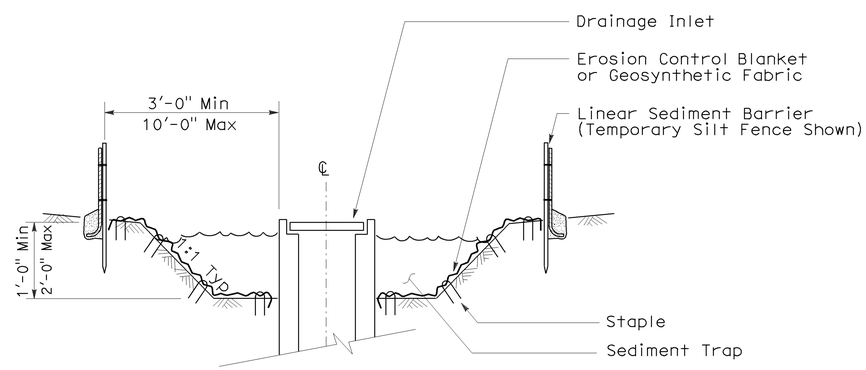

SECTION B-B

NOTES:

1. See Standard Plan T51 for Temporary Silt Fence.
2. Dimensions may vary to fit field conditions.

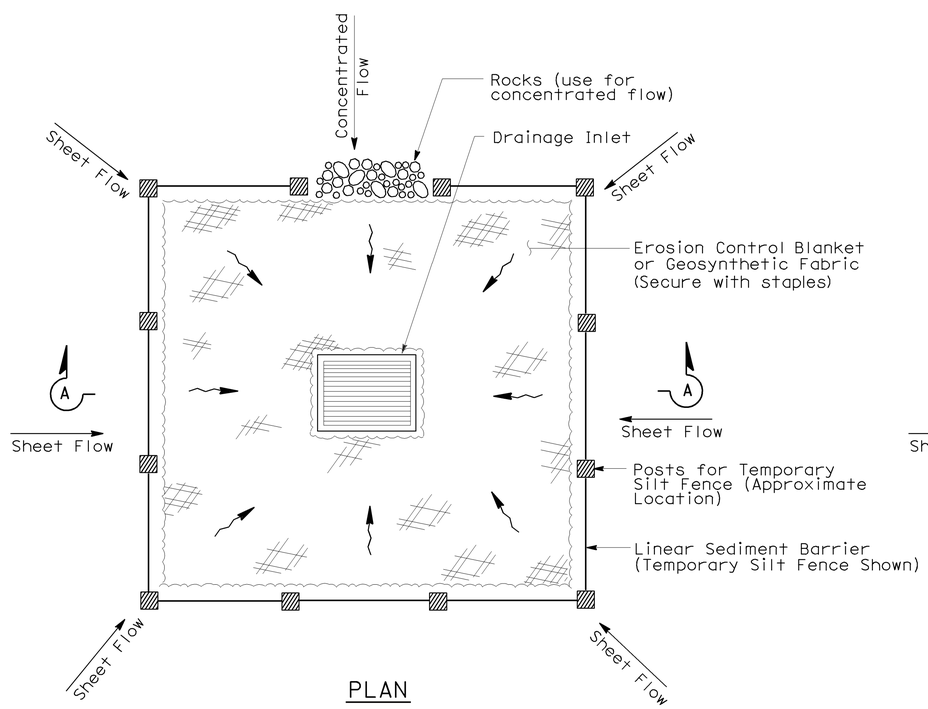

PLAN

TEMPORARY DRAINAGE INLET PROTECTION (TYPE 1)

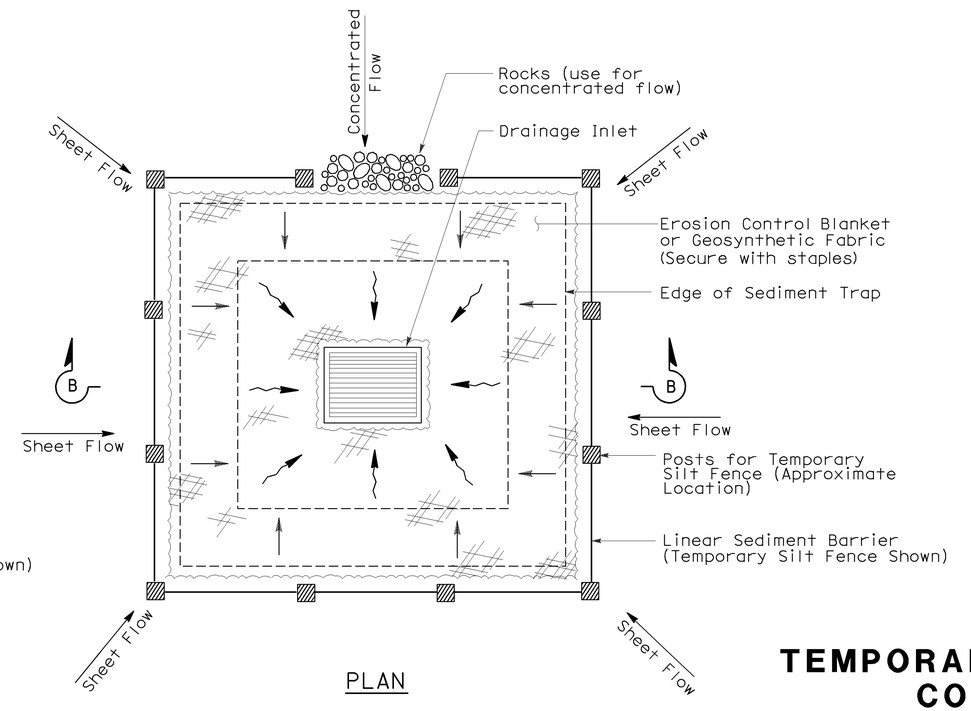

PLAN

TEMPORARY DRAINAGE INLET PROTECTION (TYPE 2) (EXCAVATED SEDIMENT TRAP)

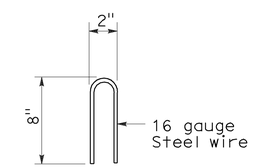

STAPLE DETAIL

STATE OF CALIFORNIA
DEPARTMENT OF TRANSPORTATION

TEMPORARY WATER POLLUTION CONTROL DETAILS (TEMPORARY DRAINAGE INLET PROTECTION)

NO SCALE

Nsp t61 dated august 15, 2008 supplements the standard plans book dated may 2006.

NEW STANDARD PLAN NSP T61

2006 NEW STANDARD PLAN NSP T61

DIST	COUNTY	ROUTE	POST MILES TOTAL PROJECT	SHEET NO.	TOTAL SHEETS
03	Nev	20	R4.1/R17.4	99	106

LICENSED LANDSCAPE ARCHITECT

August 15, 2008
PLANS APPROVAL DATE

LICENSED LANDSCAPE ARCHITECT — Robert B. Schott — Signature — 11-04-08 Renewal Date — 08-11-08 Date — STATE OF CALIFORNIA

The State of California or its officers or agents shall not be responsible for the accuracy or completeness of electronic copies of this plan sheet.

To accompany plans dated 6-4-12

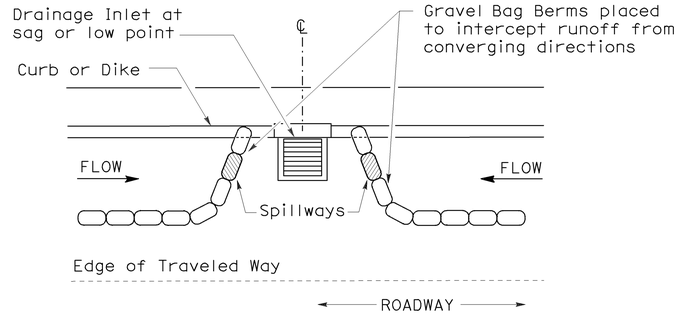

PLAN

CONFIGURATION FOR SAG POINT INLET (GRAVEL BAG BERM)

GRAVEL BAG BERM (TYPE 3A) SPACING TABLE

SLOPE OF ROADWAY (PERCENT)	1 to 3.9	4 to 5.9	6 to 7.9	8 to 10	10+
INTERVAL BETWEEN BERM	100′	75′	50′	25′	12′

For slope of less than 1%, install barriers only if erosion/sediment is prevalent

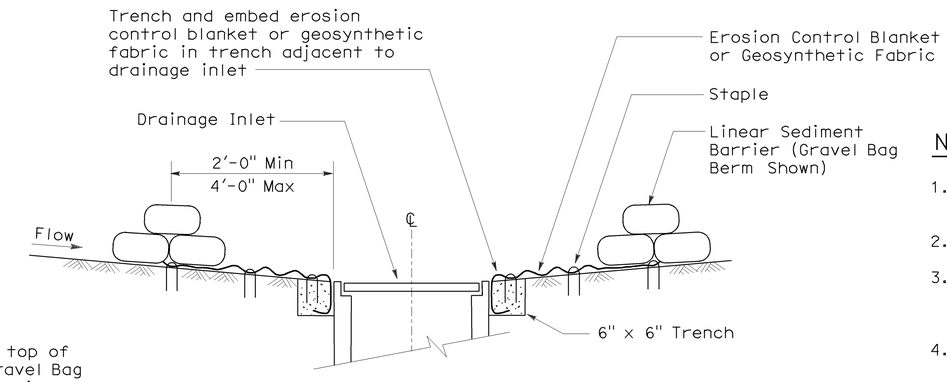

SECTION A-A

NOTES:

1. Place safety cones adjacent to drainage inlet protection.
2. Dimensions may vary to fit field conditions.
3. Install a minimum of 3 gravel bag berms upstream of each drainage inlet to be protected.
4. Position erosion control blanket or geosynthetic fabric at edge of concrete apron and secure in trench.
5. Erosion control blanket or geosynthetic fabric is not required if the area adjacent to the drainage inlet is vegetated or paved.

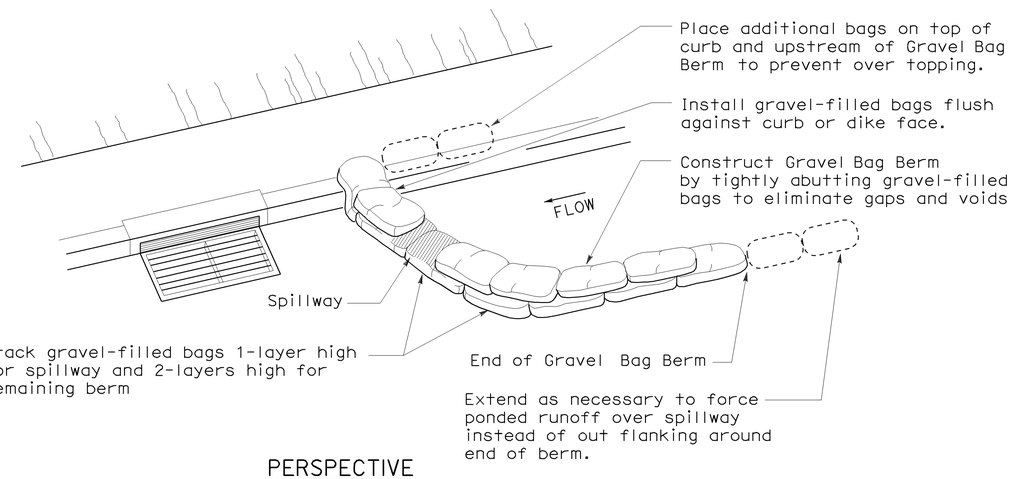

PERSPECTIVE

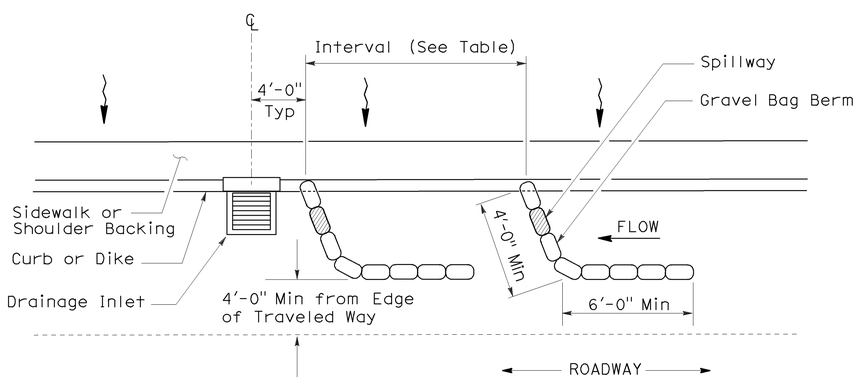

PLAN

TEMPORARY DRAINAGE INLET PROTECTION (TYPE 3A) (GRAVEL BAG BERM)

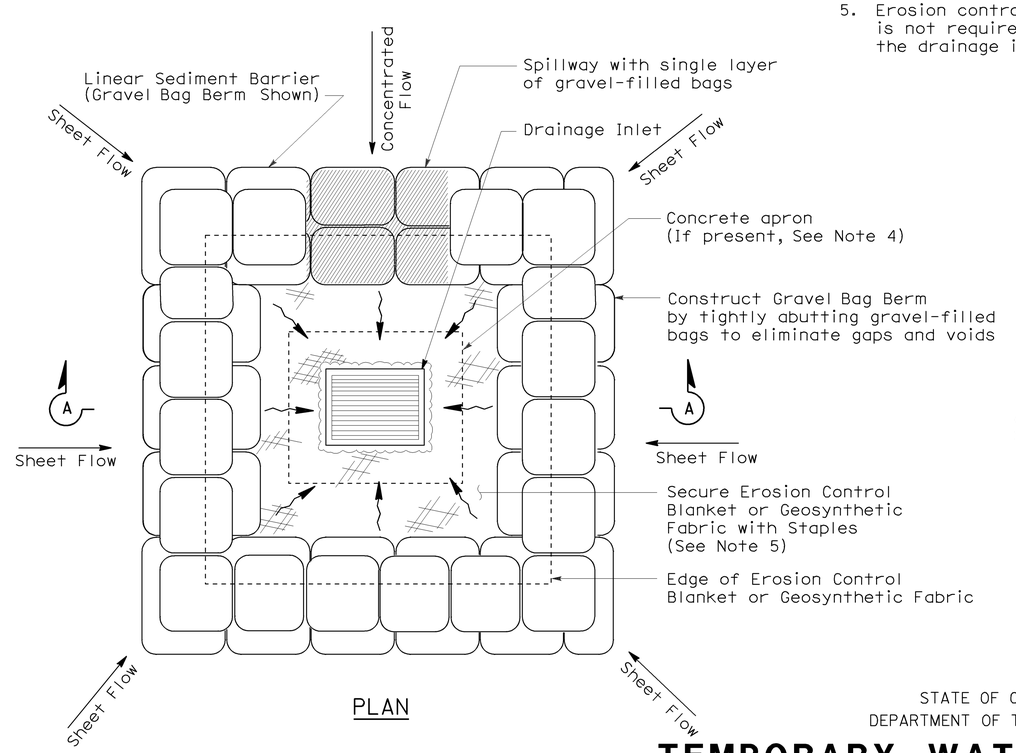

PLAN

TEMPORARY DRAINAGE INLET PROTECTION (TYPE 3B)

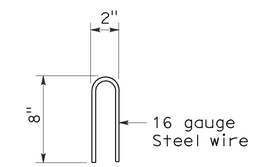

STAPLE DETAIL

STATE OF CALIFORNIA
DEPARTMENT OF TRANSPORTATION

TEMPORARY WATER POLLUTION CONTROL DETAILS (TEMPORARY DRAINAGE INLET PROTECTION)

NO SCALE

NSP T62 DATED AUGUST 15, 2008 SUPPLEMENTS THE STANDARD PLANS BOOK DATED MAY 2006.

NEW STANDARD PLAN NSP T62

2006 NEW STANDARD PLAN NSP T62

7-11-08

DIST	COUNTY	ROUTE	POST MILES TOTAL PROJECT	SHEET NO.	TOTAL SHEETS
03	Nev	20	R4.1/R17.4	100	106

LICENSED LANDSCAPE ARCHITECT

August 15, 2008
PLANS APPROVAL DATE

The State of California or its officers or agents shall not be responsible for the accuracy or completeness of electronic copies of this plan sheet.

LICENSED LANDSCAPE ARCHITECT — Robert B. Schott — Signature — 11-04-08 Renewal Date — 08-11-08 Date — STATE OF CALIFORNIA

To accompany plans dated 6-4-12

FLEXIBLE SEDIMENT BARRIER SPACING TABLE

SLOPE OF ROADWAY (PERCENT)	0 to 0.9	1 to 1.9	2 to 2.9	3 to 4	5+
INTERVAL BETWEEN BARRIERS	50′	35′	30′	25′	20′
ANGLE FROM FACE OF CURB	70°	70°	70°	45°	45°
SUGGESTED BARRIER LENGTH	6′	6′	6′	6′	6′

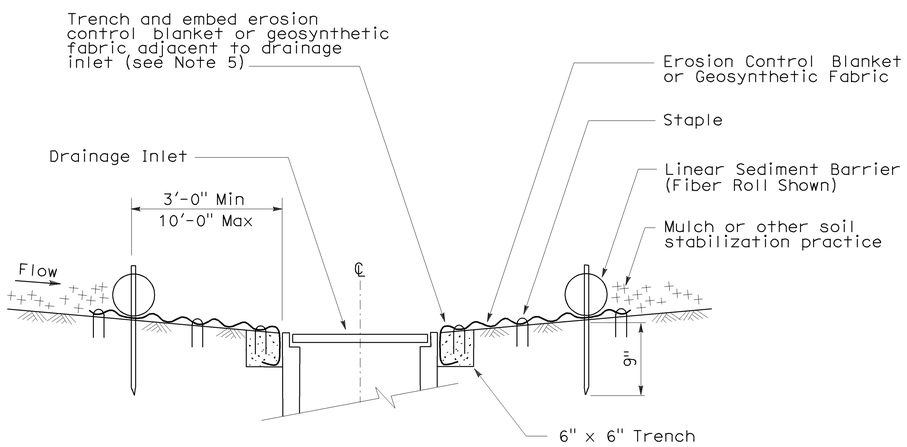

SECTION A-A

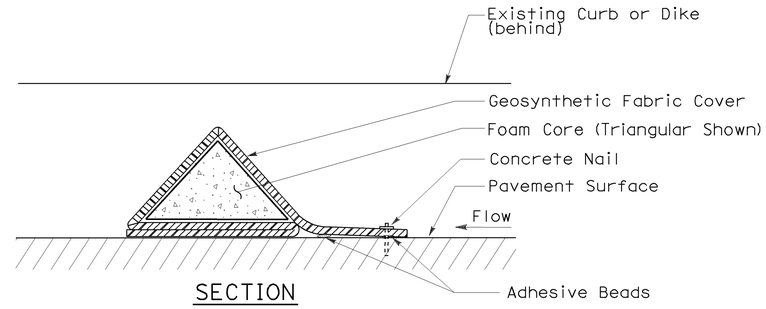

SECTION

FLEXIBLE SEDIMENT BARRIER DETAIL (FOAM BARRIER SHOWN)

NOTES:

1. See Standard Plan T51 for Temporary Silt Fence.
2. Dimensions may vary to fit field conditions.
3. Install a minimum of 3 flexible sediment barriers upstream of each drainage inlet to be protected.
4. Position erosion control blanket or geosynthetic fabric at edge of concrete apron and secure in trench.
5. Erosion control blanket or geosynthetic fabric is not required if the area adjacent to the drainage inlet is vegetated.

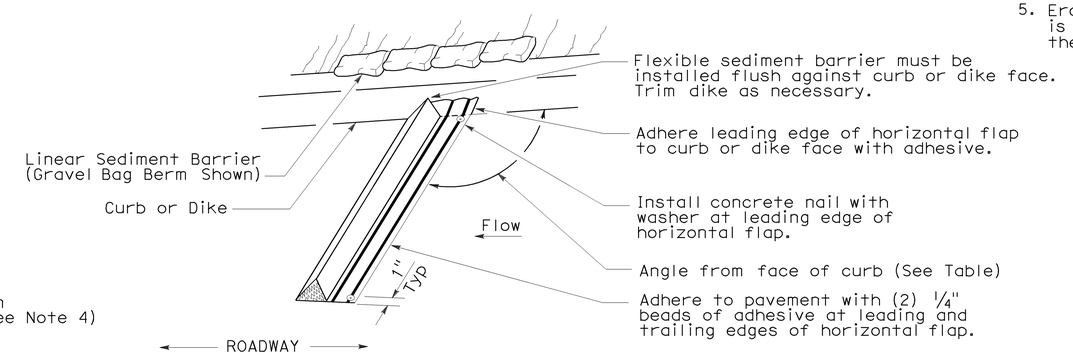

PERSPECTIVE

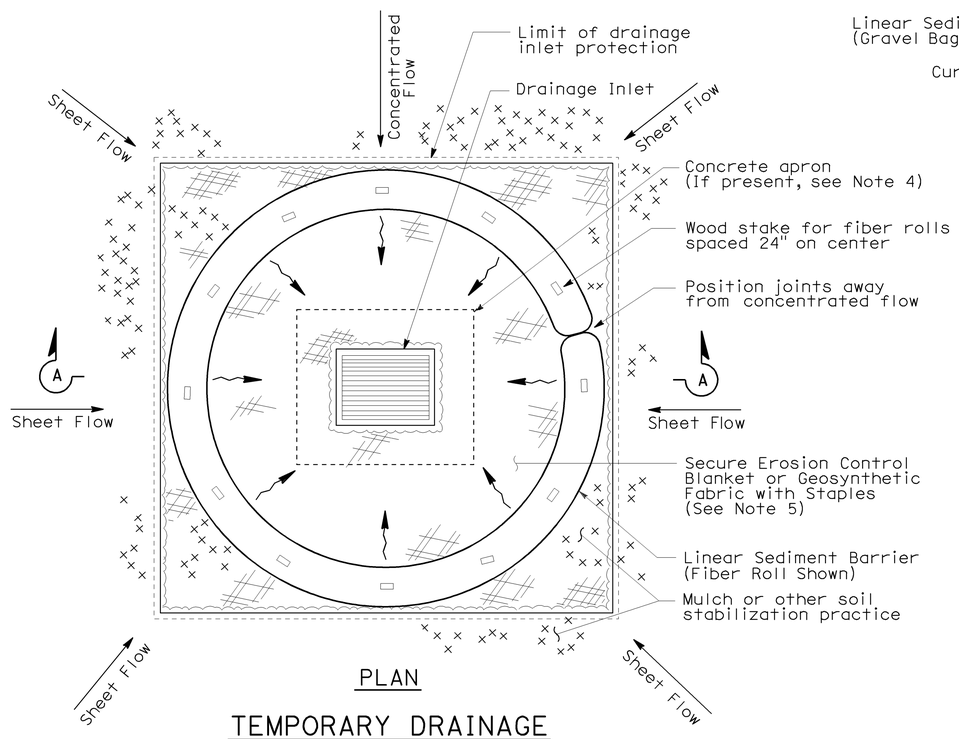

PLAN

TEMPORARY DRAINAGE INLET PROTECTION (TYPE 4A)

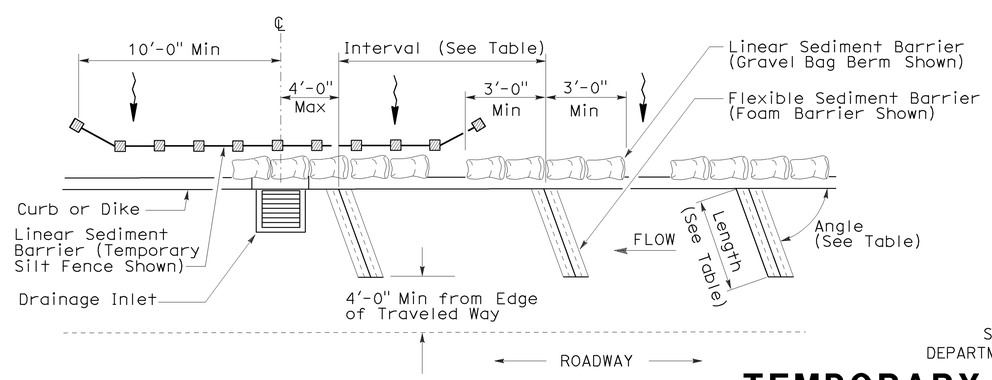

PLAN

TEMPORARY DRAINAGE INLET PROTECTION (TYPE 4B) FLEXIBLE SEDIMENT BARRIER

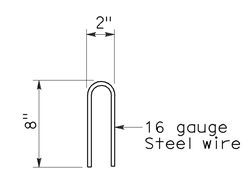

STAPLE DETAIL

STATE OF CALIFORNIA
DEPARTMENT OF TRANSPORTATION

TEMPORARY WATER POLLUTION CONTROL DETAILS (TEMPORARY DRAINAGE INLET PROTECTION)

NO SCALE

NSP T63 DATED AUGUST 15, 2008 SUPPLEMENTS THE STANDARD PLANS BOOK DATED MAY 2006.

NEW STANDARD PLAN NSP T63

2006 NEW STANDARD PLAN NSP T63

7-11-08

DIST	COUNTY	ROUTE	POST MILES TOTAL PROJECT	SHEET NO.	TOTAL SHEETS
03	Nev	20	R4.1/R17.4	101	106

LICENSED LANDSCAPE ARCHITECT

August 15, 2008
PLANS APPROVAL DATE

LICENSED LANDSCAPE ARCHITECT
Robert B. Schott 3635
Signature
11-04-08
Renewal Date
08-11-08
Date
STATE OF CALIFORNIA

The State of California or its officers or agents shall not be responsible for the accuracy or completeness of electronic copies of this plan sheet.

To accompany plans dated 6-4-12

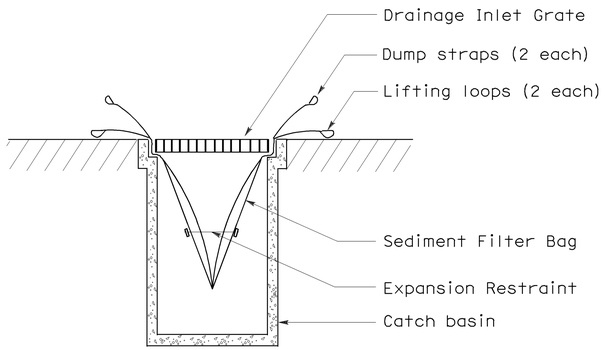

SECTION B-B

SEDIMENT FILTER BAG DETAIL

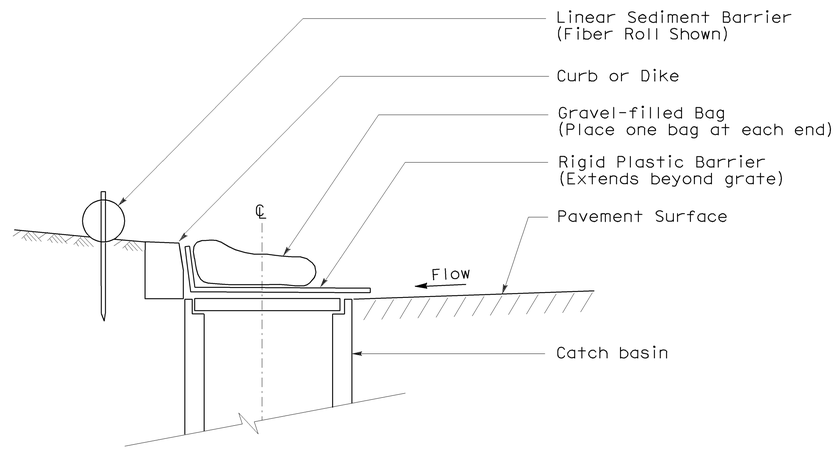

SECTION

TEMPORARY DRAINAGE INLET PROTECTION (TYPE 6A) (CATCH BASIN WITH GRATE)

NOTES:

1. See Standard Plan T51 for Temporary Silt Fence.
2. Dimensions may vary to fit field conditions.

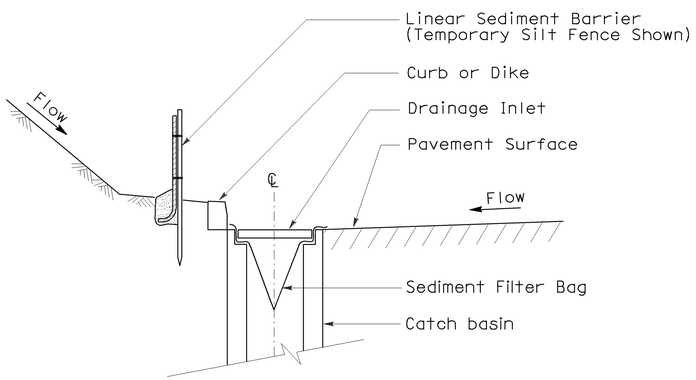

SECTION A-A

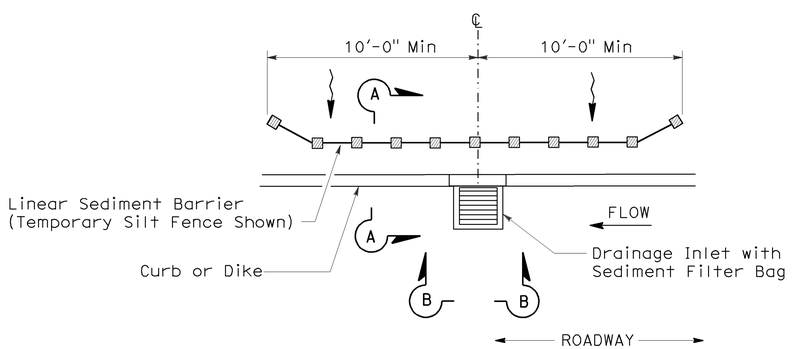

PLAN

TEMPORARY DRAINAGE INLET PROTECTION (TYPE 5) (SEDIMENT FILTER BAG)

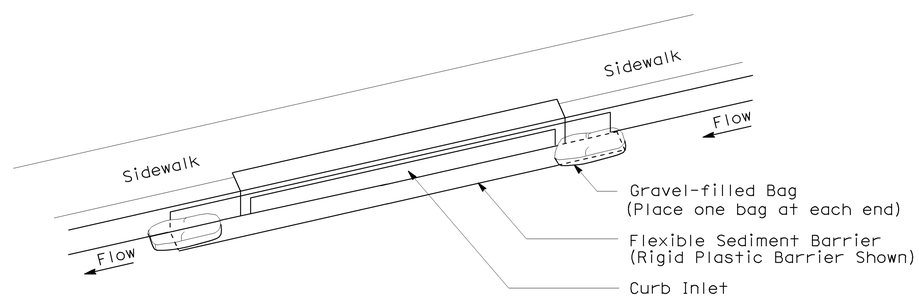

PERSPECTIVE

TEMPORARY DRAINAGE INLET PROTECTION (TYPE 6B) (CURB INLET WITHOUT GRATE)

STATE OF CALIFORNIA
DEPARTMENT OF TRANSPORTATION

TEMPORARY WATER POLLUTION CONTROL DETAILS (TEMPORARY DRAINAGE INLET PROTECTION)

NO SCALE

NSP T64 DATED AUGUST 15, 2008 SUPPLEMENTS
THE STANDARD PLANS BOOK DATED MAY 2006.

NEW STANDARD PLAN NSP T64

2006 NEW STANDARD PLAN NSP T64

7-11-08

DIST	COUNTY	ROUTE	POST MILES TOTAL PROJECT	SHEET NO.	TOTAL SHEETS
03	Nev	20	R4.1/R17.4	102	106

REGISTERED ELECTRICAL ENGINEER

October 5, 2007
PLANS APPROVAL DATE

REGISTERED PROFESSIONAL ENGINEER Jeffery G. McRae No. E14512 Exp. 6-30-08 ELECTRICAL STATE OF CALIFORNIA

The State of California or its officers or agents shall not be responsible for the accuracy or completeness of electronic copies of this plan sheet.

To accompany plans dated 6-4-12

ELECTROLIERS

STANDARD TYPES
15, 15D
15 STRUCTURE
21, 21D STRUCTURE
30
31
32
35
36-20A

High mast light pole

Double Arm lighting standard

Existing electrolier

Electrolier foundation (Future installation)

NOTES:

1. Luminaires shall be 310 W HPS when installed on Type 21, 21D, 30, 31, 32, 35 and 36-20A Standards, unless otherwise specified. Luminaires shall be 200 W HPS when installed on other type standards or poles, unless otherwise specified.
2. Luminaires shall be the cutoff type, ANSI Type Ⅲ medium cutoff lighting distribution, unless otherwise specified.
3. Variations noted adjacent to symbol on project plans.

Electrolier (see project notes or project plans)

Luminaire on wood pole

STANDARD NOTES:

- AB Abandon. If applied to conduit, remove conductors.
- BC Install pull box in existing conduit run.
- BP Pedestrian barricade, type as indicated on plan.
- CB Install conduit into existing pull box.
- CC Connect new and existing conduit. Remove existing conductors and install conductors as indicated.
- CF Conduit to remain for future use. Remove conductors. Install pull wire or rope.
- DH Detector handhole.
- FA Foundation to be abandoned.
- IS Install sign on signal mast arm.
- NS No slip base on standard.
- PEC Photoelectric control.
- PEU Photoelectric unit.
- RC Equipment or material to be removed and become the property of the Contractor.
- RE Remove electrolier, fuses and ballast. Tape ends of conductors.
- RL Relocate equipment.
- RR Remove and reuse equipment.
- RS Remove and salvage equipment.
- SC Splice new to existing conductors.
- SD Service disconnect.
- SF Standard to remain for future use. Remove luminaire, pole conductors, fuses and ballast.
- TSP Telephone service point.

ABBREVIATIONS AND EQUIPMENT DESIGNATIONS

PROPOSED	EXISTING	
BBS	bbs	Battery backup system
BC	bc	Bolt circle
C	C	Conduit
CCTV	cctv	Closed circuit television
CKT	ckt	Circuit
CMS	cms	Changeable message sign
DLC	dlc	Loop detector lead-in cable
EMS	ems	Extinguishable message sign
EVC	evc	Emergency vehicle cable
EVD	evd	Emergency vehicle detector
FB	fb	Flashing beacon
FBCA	fbca	Flashing beacon control assembly
FBS	fbs	Flashing beacon with slip base
FO	fo	Fiber optic
G	G	Ground (Equipment Grounding Conductor)
GFCI	GFCI	Ground fault circuit interrupt
HAR	har	Highway advisory radio
HEX	hex	Hexagonal
HPS	hps	High pressure sodium
IISNS	iisns	Internally illuminated street name sign
ISL	isl	Induction sign lighting
LED	led	Light emitting diode
LMA	lma	Luminaire mast arm
LPS	lps	Low pressure sodium
LTG	ltg	Lighting
LUM	lum	Luminaire
MAT	mat	Mast arm mounting vehicle signal faces, top attachment
MAS	mas	Mast arm mounting vehicle signal faces, side attachment
MAS-4A	mas-4A	Mast arm mounting vehicle signal faces, side attachment - 4 signal section
MAS-4B	mas-4B	
MAS-4C	mas-4C	
MAS-5A	mas-5A	Mast arm mounting vehicle signal faces, side attachment - 5 signal section
MAS-5B	mas-5B	
MC	mc	Mercury contactor
M/M	m/m	Multiple to multiple transformer
MT	mt	Conduit with pull wire or rope only
MTG	mtg	Mounting
	mv	Mercury vapor lighting fixture
N	N	Neutral (Grounded Conductor)
NC	NC	Normally closed
NO	NO	Normally open
PB	pb	Pull box
PEC	pec	Photoelectric control (Type Ⅰ, Ⅱ, Ⅲ, Ⅳ or Ⅴ as shown)
PED	ped	Pedestrian
PEU	peu	Photoelectric unit
PPB	ppb	Pedestrian push button
RL		Relocated equipment
RM	rm	Ramp metering
SB	sb	Slip base
SIC	sic	Signal interconnect cable
SIG	sig	Signal
SMA	sma	Signal mast arm
SNS	sns	Street name sign
SP	sp	Service point
TDC	tdc	Telephone demarcation cabinet
TMS	tms	Traffic monitoring station
TOS	tos	Traffic Operations System
VEH	veh	Vehicle
XFMR	xfmr	Transformer
COMM	comm	Communication
RWIS	rwis	Roadway weather information system

SOFFIT AND WALL MOUNTED LUMINAIRES

Pendant, 70 W HPS unless otherwise specified.

Flush, 70 W HPS unless otherwise specified.

Wall surface, 70 W HPS unless otherwise specified.

Existing soffit or wall luminaire to remain unmodified.

Existing soffit or wall luminaire to be modified as specified.

NOTE:

Arrow indicates "street side" of luminaire.

STATE OF CALIFORNIA
DEPARTMENT OF TRANSPORTATION

ELECTRICAL SYSTEMS (SYMBOLS AND ABBREVIATIONS)

NO SCALE

RSP ES-1A DATED OCTOBER 5, 2007 SUPERSEDES STANDARD PLAN ES-1A DATED MAY 1, 2006 - PAGE 400 OF THE STANDARD PLANS BOOK DATED MAY 2006.

REVISED STANDARD PLAN RSP ES-1A

2006 REVISED STANDARD PLAN RSP ES-1A

DIST	COUNTY	ROUTE	POST MILES TOTAL PROJECT	SHEET NO.	TOTAL SHEETS
03	Nev	20	R4.1/R17.4	103	106

REGISTERED ELECTRICAL ENGINEER

October 5, 2007
PLANS APPROVAL DATE

REGISTERED PROFESSIONAL ENGINEER
Jeffery G. McRae
No. E14512
Exp. 6-30-08
ELECTRICAL
STATE OF CALIFORNIA

The State of California or its officers or agents shall not be responsible for the accuracy or completeness of electronic copies of this plan sheet.

To accompany plans dated 6-4-12

CONDUIT

PROPOSED	EXISTING	
		Lighting Conduit, unless otherwise indicated or noted
		Traffic signal conduit
C	c	Communication conduit
T	t	Telephone conduit
F	f	Fire alarm conduit
FO	fo	Fiber optic conduit
		Conduit termination (RSP ES-9A C)
R	r	Conduit riser in/on structure or service pole

SERVICE EQUIPMENT

PROPOSED	EXISTING	
OH	oh	Overhead lines
U	U	Wood pole "U" indicates utility owned
		Pole guy with anchor
		Utility transformer - ground mounted
III		Service equipment enclosure type
		Service equipment enclosure door indicates front of enclosure
T	t	Telephone demarcation cabinet

POLE-MOUNTED SERVICE DESIGNATION

Type of installation

TYPE H SERVICE - 28'-10" ← Pole height above grade

ILLUMINATED OVERHEAD SIGN

PROPOSED	EXISTING	
		Overhead sign - Single post
		Overhead sign - Two post
		Overhead sign - Mounted on structure
		Overhead sign with electrolier

SIGNAL EQUIPMENT

PROPOSED	EXISTING	
		Pedestrian signal face
		Pedestrian push button post
		Pedestrian barricade
		Vehicle signal face (with backplate, 3-Section: red, yellow and green)
		Vehicle signal face with angle visors
PV	PV	Modifications of basic symbols: "L" indicates all non-arrow sections louvered "LG" indicates louvered green section only "PV" indicates 12" programmed visibility sections "8" indicates all 8" sections (only when specified)
		Type 15TS and Vehicle signal face
		Vehicle signal face with red, yellow and green left arrow sections
		Vehicle signal face with red and yellow sections and up green arrow
		Vehicle signal face (5 Section) with red, yellow and green sections and yellow and green right arrows
		Type 1 Standard and attached vehicle signal faces
		Standard with signal mast arm only and attached vehicle signal faces and internally illuminated street name sign
		Type 33 Standard, Left-turn vehicle signal face and sign
		Standard with luminaire and signal mast arms and attached vehicle signal faces
		Cantilever flashing beacon Type 9 Frame, with a sign unless otherwise specified or indicated
		Type 15-FBS Standard with two vehicle signal face sections with lens, backplate and visor with a sign
R	Y	Flashing beacon. One vehicle signal face section with lens, backplate and visor. "R" indicates red indication, "Y" indicates yellow indication
		Controller assembly. Door indicates front of cabinet

SIGNAL EQUIPMENT Cont

PROPOSED	EXISTING	
		Guard post
		Type 1 Standard with "Meter On" sign
		Emergency Vehicle detector

NOTES:

1. All signal sections shall be 12" unless shown otherwise.
2. Signal heads shall be provided with backplates unless shown otherwise.
3. Signal indication shall be LED.

STATE OF CALIFORNIA
DEPARTMENT OF TRANSPORTATION

ELECTRICAL SYSTEMS (SYMBOLS AND ABBREVIATIONS)

NO SCALE

RSP ES-1B DATED OCTOBER 5, 2007 SUPERCEDES STANDARD PLAN ES-1B DATED MAY 1, 2006 - PAGE 401 OF THE STANDARD PLANS BOOK DATED MAY 2006.

REVISED STANDARD PLAN RSP ES-1B

2006 REVISED STANDARD PLAN RSP ES-1B

7-10-07

DIST	COUNTY	ROUTE	POST MILES TOTAL PROJECT	SHEET NO.	TOTAL SHEETS
03	Nev	20	R4.1/R17.4	104	106

REGISTERED ELECTRICAL ENGINEER

October 5, 2007
PLANS APPROVAL DATE

REGISTERED PROFESSIONAL ENGINEER
Jeffery G. McRae
No. E14512
Exp. 6-30-08
ELECTRICAL
STATE OF CALIFORNIA

The State of California or its officers or agents shall not be responsible for the accuracy or completeness of electronic copies of this plan sheet.

To accompany plans dated 6-4-12

EQUIPMENT IDENTIFICATION

ILLUMINATED SIGN IDENTIFICATION NUMBER:

Sign No. 12345 — Sign number - Place on post or structure

10 ISL SCI 1.0

- 1.0 — Transformer rating (kVA)
- SCI — Lighting control type
- ISL — Number and type of fixtures

Do NOT place on standard or structure

ELECTROLIER OR EQUIPMENT IDENTIFICATION NUMBER:

12345 - 15'-0"

- 15'-0" — Mast arm length, if shown. Do not place on standard or structure.
- 12345 — Equipment number - Place on standard or structure. Existing equipment numbers are shown in parenthesis

CONDUIT AND CONDUCTOR IDENTIFICATION:

1½"C, 2#10, 15#14, 2 DLC

- 2#10, 15#14, 2 DLC — Number and size of conductors and cables
- 1½"C — Size of conduit in inches

Ø1, Ø2, Ø2P, etc.	Traffic phase identification for signal faces, detectors and phase diagrams
1 2 3	Project note numbers
A B C	Equipment description, installation or item numbers
1 2 3	Conduit run numbers

SIGNAL AND LIGHTING STANDARD (TYPICAL DESIGNATION):

19A - 3 - 100

- 100 — Wind velocity = 100 mph
- 3 — Case 3 arm loading
- 19A — Standard type
- Standard Plan sheet number
- Detail number or letter

MISCELLANEOUS EQUIPMENT

PROPOSED	EXISTING	
CMS	cms	Changeable message sign
		Closed circuit television camera
		Highway advisory radio pole and antenna
EMS	ems	Extinguishable message sign
M V	m v	Detection device M = Microwave sensor V = Video image sensor

WIRING DIAGRAM LEGEND

P	Pole
CB	Circuit breaker
A	Ampere
V	Volt
M	Metered
UM	Unmetered
NB	Neutral bus
GB	Ground bus
G	Equipment grounding conductor
N	Grounded conductor (Neutral)

- External conductor
- Conductor or bus
- Tie point
- Contactor coil
- Contactor, Contact NO
- Terminal blocks
- Contactor, Contact NC
- Enclosure bond
- Grounding electrode
- Circuit breaker
- Receptacle

PULL BOXES

PROPOSED	EXISTING	
		Pull box-No. 5 unless otherwise indicated or noted.
3	9A(21)	Pull box-Additional designations or descriptions

3 = No. 3½ pull box
5 = No. 5 pull box
6 = No. 6 pull box
7 = No. 7 (Ceiling pull box)
8 = No. 8 (Pendant soffit pull box)
9 = No. 9 pull box
9A = No. 9A pull box

(C) = Communications pull box
(E) = Pull box with extension
(S) = Sprinkler control pull box
(21) = Anchor bolts and conduit for future installation of Type 21 Standard
(T) = Traffic pull box

VEHICLE DETECTORS

5 J 9 U

- U = Upper
- L = Lower
- Slot number in input file
- Input file (I or J)
- Phase

PROPOSED	EXISTING	
		Type A detector loop. Outline of sawcut shown.
		Type B detector loop. Outline of sawcut shown.
		Type C detector loop. Outline of sawcut shown.
		Type D detector loop. Outline of sawcut shown.
		Type E detector loop. Outline of sawcut shown.
		Type Q detector loop. Outline of sawcut shown.
		Magnetic detector
DH	dh	Detector handhole
		Microwave or video detection zone

STATE OF CALIFORNIA
DEPARTMENT OF TRANSPORTATION

ELECTRICAL SYSTEMS (SYMBOLS AND ABBREVIATIONS)

NO SCALE

RSP ES-1C DATED OCTOBER 5, 2007 SUPERCEDES STANDARD PLAN ES-1C DATED MAY 1, 2006 - PAGE 402 OF THE STANDARD PLANS BOOK DATED MAY 2006.

REVISED STANDARD PLAN RSP ES-1C

2006 REVISED STANDARD PLAN RSP ES-1C

DIST	COUNTY	ROUTE	POST MILES TOTAL PROJECT	SHEET NO.	TOTAL SHEETS
03	Nev	20	R4.1/R17.4	105	106

REGISTERED ELECTRICAL ENGINEER

October 5, 2007
PLANS APPROVAL DATE

REGISTERED PROFESSIONAL ENGINEER Jeffery G. McRae No. E14512 Exp. 6-30-08 ELECTRICAL STATE OF CALIFORNIA

The State of California or its officers or agents shall not be responsible for the accuracy or completeness of electronic copies of this plan sheet.

To accompany plans dated 6-4-12

2006 REVISED STANDARD PLAN RSP ES-5A

LOOP INSTALLATION PROCEDURE

1. Loops shall be centered in lanes.
2. Saw slots in pavement for loop conductors as shown in details.
3. Distance between side of loop and a lead-in saw cut from adjacent detectors shall be 2'-0" minimum. Distance between lead-in saw cuts shall be 6" minimum.
4. Bottom of saw slot shall be smooth with no sharp edges.
5. Slots shall be washed until clean, blown out and thoroughly dried before installing loop conductors.
6. Adjacent loops on the same sensor unit channel shall be wound in opposite directions.
7. Identify and tag loop circuit pairs in the pull box with loop number, start (S) and finish (F) of conductor. Identify and tag lead-in-cable with sensor number and phase.
8. Install loop conductor in slot using a 3/16" to 1/4" thick wood paddle. Hold loop conductors with wood paddles (at the bottom of the sawed slot) during sealant placement.
9. No more than 2 twisted pairs shall be installed in one sawed slot.
10. Allow additional 5'-0" of slack length of conductor for the lead-in run to pull box.
11. The additional length of each conductor for each loop shall be twisted together into a pair (6 turns per 3'-4" minimum) before being placed in the slot and conduit leading to pull box.
12. Test each loop circuit for continuity, circuit resistance and insulation resistance at the pull box before filling slots.
13. Fill slots as shown in details.
14. Splice loop conductors to lead-in-cable. Splices shall be soldered.
15. End of lead-in-cable and Type 2 loop conductor shall be waterproofed prior to installing in conduit to prevent moisture from entering the cable.
16. Lead-in-cable shall not be spliced between the pull box and the controller cabinet terminals.
17. Test each loop circuit for continuity, circuit resistance and insulation resistance at the controller cabinet location.
18. Where loop conductors are not to be spliced to a lead-in-cable, the ends of the conductors shall be taped and waterproofed with electrical insulating coating.

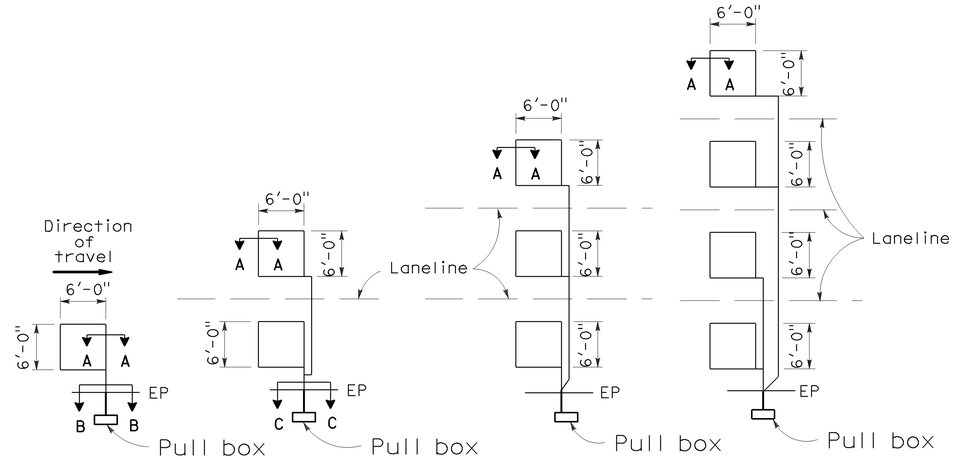

TYPE 1A INSTALLATION | TYPE 2A INSTALLATION | TYPE 3A INSTALLATION | TYPE 4A INSTALLATION

SAWCUT DETAILS

(Type A loop detector configurations illustrated)

1. 1A thru 4A = 1 Type A loop configuration in each lane.
2. 1B thru 4B = 1 Type B loop configuration in each lane.
3. 1C = 1 Type C loop configuration entering lanes as required.
4. 1D thru 4D = 1 Type D loop configuration in each lane.
5. 1E thru 4E = 1 Type E loop configuration in each lane.
6. 1Q thru 4Q = 1 Type Q loop configuration in each lane. (Use Type A, B, C, D, E or Q loop detector configurations only when specified or shown on plans)

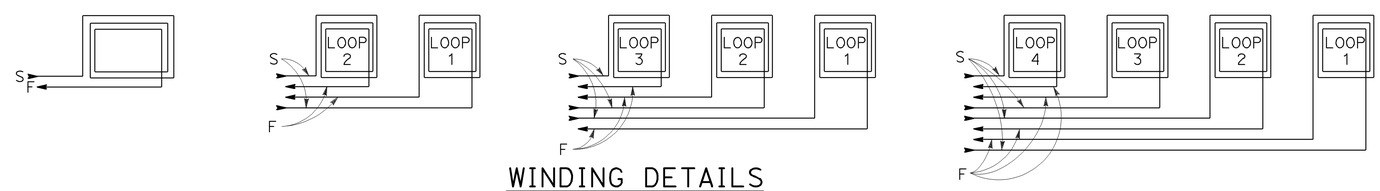

WINDING DETAILS

See Notes 6 and 7

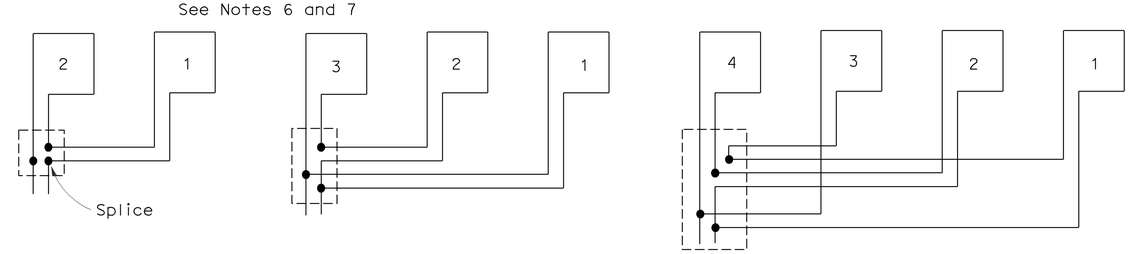

TYPICAL LOOP CONNECTIONS

(Dashed lines represent the pull box)

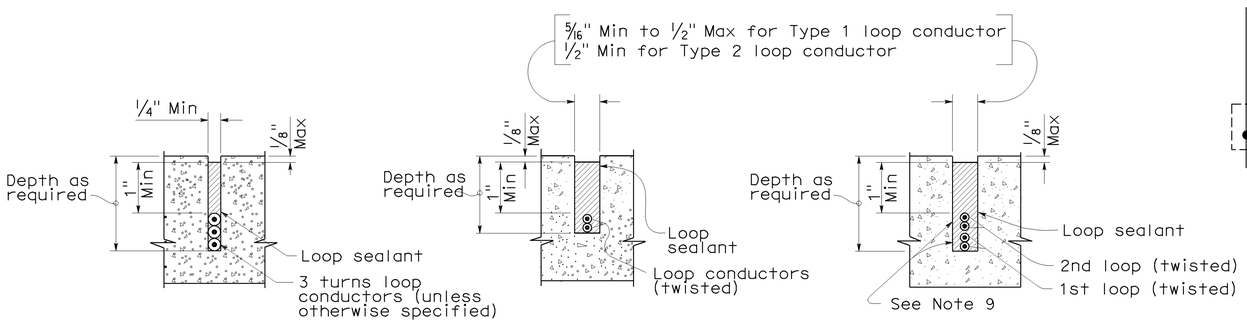

SECTION A-A | SECTION B-B | SECTION C-C

SLOT DETAILS - TYPE 1 AND TYPE 2 LOOP CONDUCTOR

STATE OF CALIFORNIA
DEPARTMENT OF TRANSPORTATION

ELECTRICAL SYSTEMS (DETECTORS)

NO SCALE

RSP ES-5A DATED OCTOBER 5, 2007 SUPERCEDES STANDARD PLAN ES-5A DATED MAY 1, 2006 - PAGE 423 OF THE STANDARD PLANS BOOK DATED MAY 2006.

REVISED STANDARD PLAN RSP ES-5A

DIST	COUNTY	ROUTE	POST MILES TOTAL PROJECT	SHEET NO.	TOTAL SHEETS
03	Nev	20	R4.1/R17.4	106	106

REGISTERED ELECTRICAL ENGINEER

July 20, 2012
PLANS APPROVAL DATE

REGISTERED PROFESSIONAL ENGINEER
Jeffery G. McRae
No. E14512
Exp. 6-30-14
ELECTRICAL
STATE OF CALIFORNIA

The State of California or its officers or agents shall not be responsible for the accuracy or completeness of electronic copies of this plan sheet.

To accompany plans dated 6-4-12

ISOFOOTCANDLE CURVE - MINIMUM

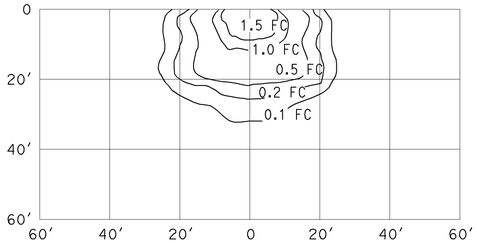

WALL LUMINAIRE
15′ Mounting Height
Lamp operated at 5,800 lm
70-W high pressure sodium lamp
ANSI Designation S62

ISOFOOTCANDLE CURVE - MINIMUM

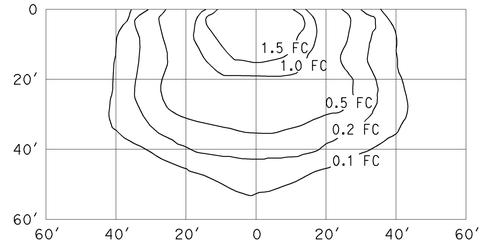

WALL LUMINAIRE
15′ Mounting Height
Lamp operated at 9,500 lm
100-W high pressure sodium lamp
ANSI Designation S54

ISOFOOTCANDLE CURVE - MINIMUM

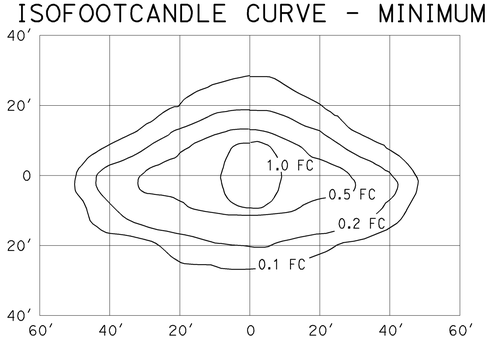

PENDANT SOFFIT LUMINAIRE
TYPE III SHORT
17′ Mounting Height
Lamp operated at 5,800 lm
70-W high pressure sodium lamp
ANSI Designation S62

ISOFOOTCANDLE CURVE - MINIMUM

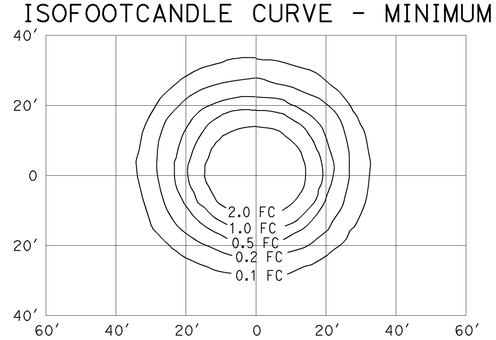

PENDANT SOFFIT LUMINAIRE
17′ Mounting Height
Lamp operated at 5,800 lm
70-W high pressure sodium lamp
ANSI Designation S62

ISOFOOTCANDLE CURVE - MINIMUM

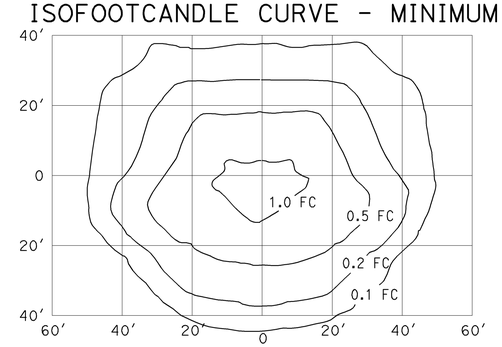

FLUSH SOFFIT LUMINAIRE
17′ Mounting Height
Lamp operated at 5,800 lm
70-W high pressure sodium lamp
ANSI Designation S62

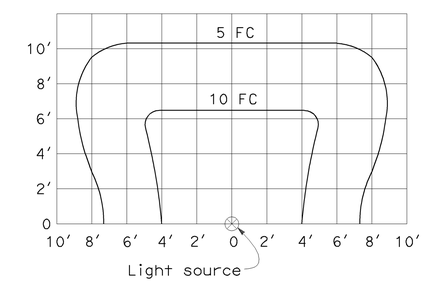

SIGN LIGHTING FIXTURE
ISOFOOTCANDLE DIAGRAM

NOTES:

1. Curves represent the minimum footcandle (FC) of initial illumination on a 10′-0" × 20′-0" panel.
2. The FC shown are with the fixture attached to the light fixture mounting channel which places the center of the source 4′-8" in front of panel and 1′-0" below the bottom edge.
3. Applicable lamp: 85-W fluorescent phosphor coated induction lamp.

STATE OF CALIFORNIA
DEPARTMENT OF TRANSPORTATION

ELECTRICAL SYSTEMS (ISOFOOTCANDLE DIAGRAMS)

NO SCALE

NSP ES-10B DATED JULY 20, 2012 SUPPLEMENTS THE STANDARD PLANS BOOK DATED MAY 2006.

NEW STANDARD PLAN NSP ES-10B

2006 NEW STANDARD PLAN NSP ES-10B

2-15-12