Dist	COUNTY	ROUTE	POST MILES TOTAL PROJECT	SHEET No.	TOTAL SHEETS
03	Yol	113	R0.3/R10.3	1	44

INDEX OF PLANS

SHEET No.	DESCRIPTION
1	TITLE AND LOCATION MAP
2-11	CONSTRUCTION DETAILS
12-13	SUMMARY OF QUANTITIES
14-30	ELECTRICAL PLANS
31-44	REVISED AND NEW STANDARD PLANS

THE STANDARD PLANS LIST APPLICABLE TO THIS CONTRACT IS INCLUDED IN THE NOTICE TO CONTRACTORS AND SPECIAL PROVISIONS BOOK.

STATE OF CALIFORNIA

DEPARTMENT OF TRANSPORTATION

PROJECT PLANS FOR CONSTRUCTION ON

STATE HIGHWAY

IN YOLO COUNTY IN AND NEAR DAVIS AND IN WOODLAND AT VARIOUS LOCATIONS FROM 0.3 MILE NORTH OF SOLANO COUNTY LINE TO EAST WOODLAND OVERHEAD

TO BE SUPPLEMENTED BY STANDARD PLANS DATED MAY 2006

LOCATION MAP

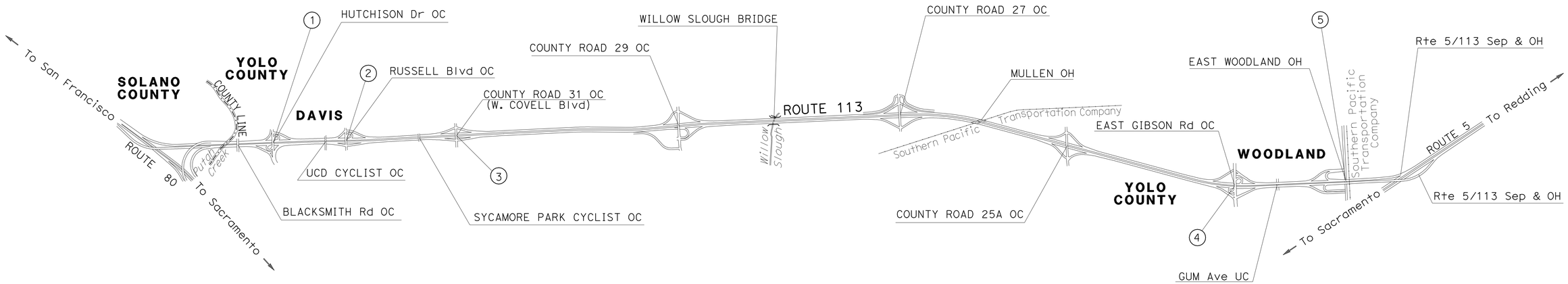

LOCATIONS OF CONSTRUCTION

COUNTY	ROUTE	PM	LOCATION	DESCRIPTION
Yol	113	R0.4	1	HUTCHINGSON DRIVE
	113	R1.1	2	RUSSELL Blvd
	113	R2.1	3	WEST COVELL Blvd
	113	R9.2	4	EAST GIBSON Rd
	113	R10.2	5	EAST MAIN STREET

THE CONTRACTOR SHALL POSSESS THE CLASS (OR CLASSES) OF LICENSE AS SPECIFIED IN THE "NOTICE TO BIDDERS."

PROJECT MANAGER: NADARAJAH SUTHAHAR

DESIGN ENGINEER: FERMIN BARRIGA

H Paras Jr 1-24-12
PROJECT ENGINEER DATE
REGISTERED CIVIL ENGINEER

REGISTERED PROFESSIONAL ENGINEER HORACIO PARAS JR No. C73255 Exp. 12-31-12 CIVIL STATE OF CALIFORNIA

January 30, 2012
PLANS APPROVAL DATE

THE STATE OF CALIFORNIA OR ITS OFFICERS OR AGENTS SHALL NOT BE RESPONSIBLE FOR THE ACCURACY OR COMPLETENESS OF SCANNED COPIES OF THIS PLAN SHEET.

CONTRACT No.	03-2F6704
PROJECT ID	0300020728

LAST REVISION 00-00-00 DATE PLOTTED => 08-MAR-2012 TIME PLOTTED => 14:02

Dist	COUNTY	ROUTE	POST MILES TOTAL PROJECT	SHEET No.	TOTAL SHEETS
03	Yol	113	R0.3/R10.3	2	44

REGISTERED CIVIL ENGINEER 1-24-12 DATE

1-30-12
PLANS APPROVAL DATE

REGISTERED PROFESSIONAL ENGINEER HORACIO PARAS JR No. C73255 Exp. 12-31-12 CIVIL STATE OF CALIFORNIA

THE STATE OF CALIFORNIA OR ITS OFFICERS OR AGENTS SHALL NOT BE RESPONSIBLE FOR THE ACCURACY OR COMPLETENESS OF SCANNED COPIES OF THIS PLAN SHEET.

NOTES:

1. FOR ACCURATE RIGHT OF WAY, CONTACT RIGHT OF WAY ENGINEERING AT THE DISTRICT OFFICE.
2. MAINTAIN EXISTING FLOW LINE ELEVATIONS OR AS DIRECTED BY THE ENGINEER.
3. FOR ELECTRICAL WORK SEE ELECTRICAL PLANS.

LEGEND

ROADWAY EXCAVATION DEPTH 0.50′ 0.50′ MINOR HMA

REMOVE CONCRETE (CURB, GUTTER AND SIDEWALK)

MINOR CONCRETE (CURB, SIDEWALK, AND CURB RAMP)

GROOVED RAMP BOUNDARY.

CURB RAMP DETECTABLE WARNING SURFACE

DIRECTION OF SIDEWALK OR CURB RAMP SLOPE

UTILITY	OWNER
NATURAL GAS	PG&E
ELECTRICAL CONDUIT	PG&E

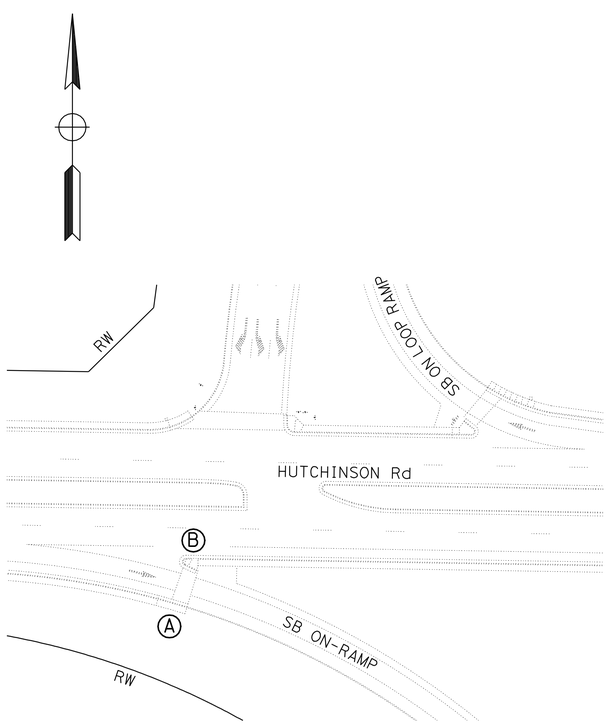

LOCATION 1
HUTCHINSON Rd AND ROUTE 113

Ⓑ MODIFIED CASE C

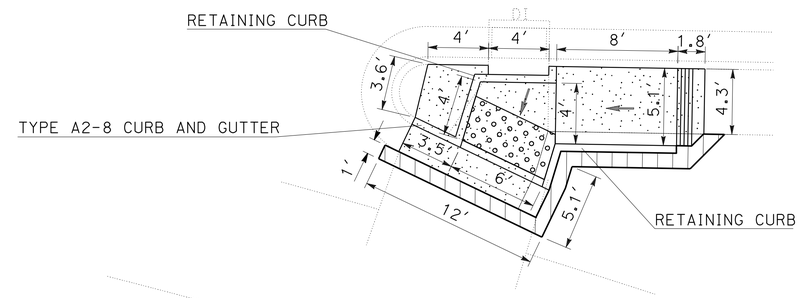

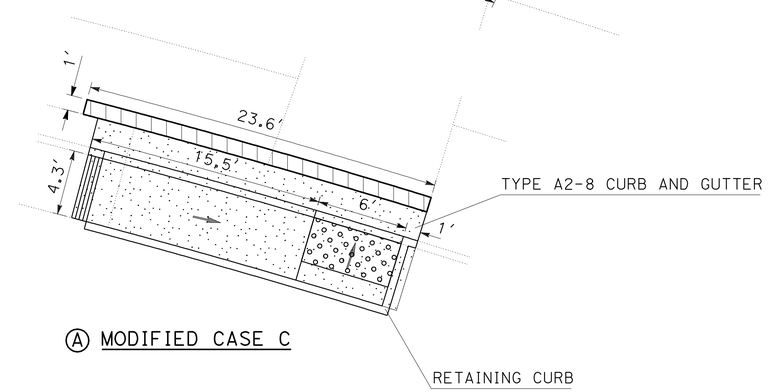

Ⓐ MODIFIED CASE C

EXISTING UTILITY FACILITIES HAVE NOT BEEN PLOTTED ON THESE PLANS

CONSTRUCTION DETAILS

NO SCALE

C-1

STATE OF CALIFORNIA - DEPARTMENT OF TRANSPORTATION
Caltrans
NORTH REGION
DIVISION OF ENGINEERING

FUNCTIONAL SUPERVISOR: FERMIN BARRIGA

CALCULATED-DESIGNED BY: H PARAS JR
CHECKED BY: S CHOWDHURY

REVISED BY
DATE REVISED

LAST REVISION 01-23-12
DATE PLOTTED => 08-MAR-2012
TIME PLOTTED => 14:02

Dist	COUNTY	ROUTE	POST MILES TOTAL PROJECT	SHEET No.	TOTAL SHEETS
03	Yol	113	R0.3/R10.3	3	44

REGISTERED CIVIL ENGINEER 1-24-12 DATE

1-30-12
PLANS APPROVAL DATE

REGISTERED PROFESSIONAL ENGINEER HORACIO PARAS JR No. C73255 Exp. 12-31-12 CIVIL STATE OF CALIFORNIA

THE STATE OF CALIFORNIA OR ITS OFFICERS OR AGENTS SHALL NOT BE RESPONSIBLE FOR THE ACCURACY OR COMPLETENESS OF SCANNED COPIES OF THIS PLAN SHEET.

NOTE:

FOR ACCURATE RIGHT OF WAY DATA, CONTACT RIGHT OF WAY ENGINEERING AT THE DISTRICT OFFICE.

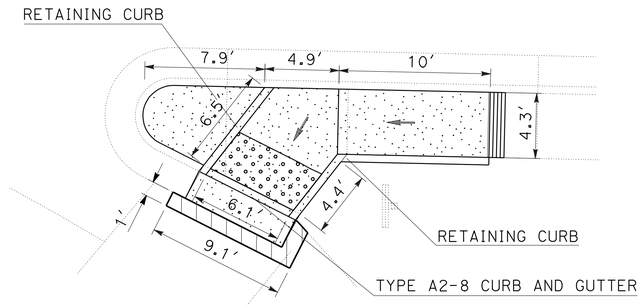

Ⓓ MODIFIED CASE C

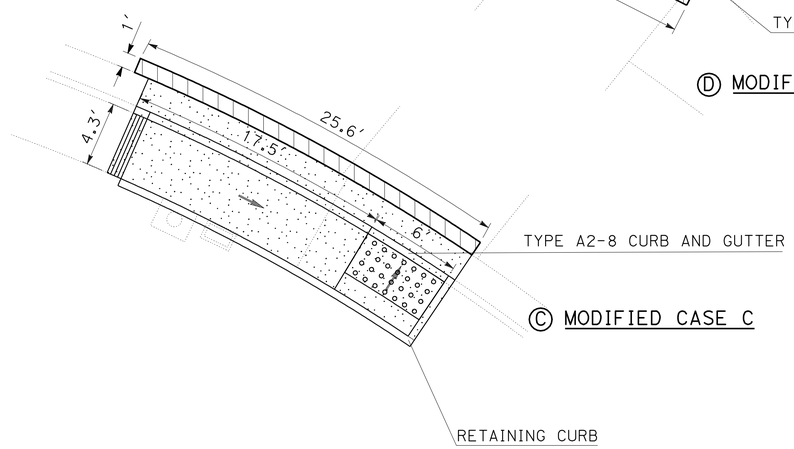

Ⓒ MODIFIED CASE C

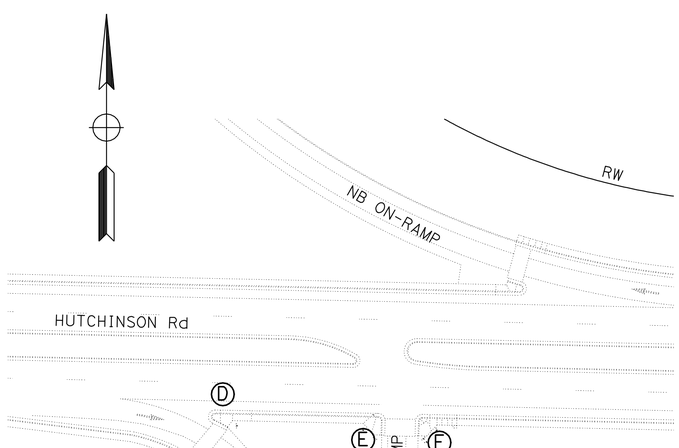

LOCATION 1
HUTCHINSON Rd AND ROUTE 113

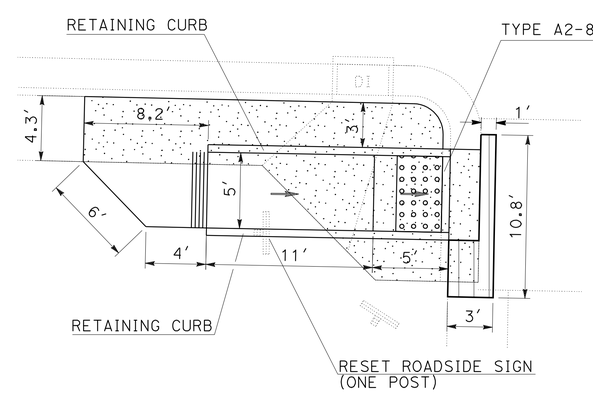

Ⓔ MODIFIED CASE C

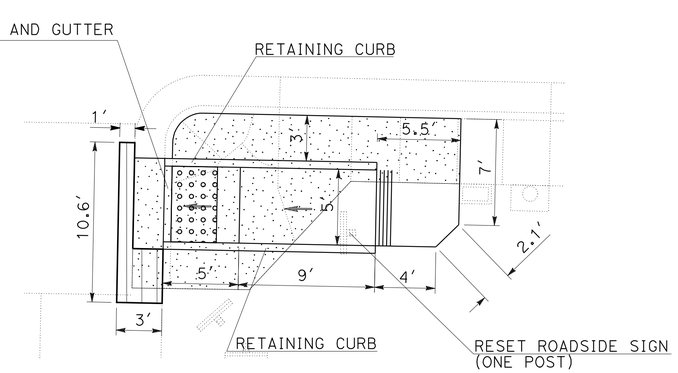

Ⓕ MODIFIED CASE C

EXISTING UTILITY FACILITIES HAVE NOT BEEN PLOTTED ON THESE PLANS

CONSTRUCTION DETAILS

NO SCALE

C-2

REVISED BY | DATE REVISED
H PARAS JR | S CHOWDHURY
CALCULATED-DESIGNED BY | CHECKED BY
FUNCTIONAL SUPERVISOR
FERMIN BARRIGA

STATE OF CALIFORNIA - DEPARTMENT OF TRANSPORTATION
Caltrans
NORTH REGION
DIVISION OF ENGINEERING

LAST REVISION 01-23-12 | DATE PLOTTED => 08-MAR-2012 | TIME PLOTTED => 14:02

Dist	COUNTY	ROUTE	POST MILES TOTAL PROJECT	SHEET No.	TOTAL SHEETS
03	Yol	113	R0.3/R10.3	4	44

REGISTERED CIVIL ENGINEER 1-24-12 DATE

1-30-12
PLANS APPROVAL DATE

REGISTERED PROFESSIONAL ENGINEER HORACIO PARAS JR No. C73255 Exp. 12-31-12 CIVIL STATE OF CALIFORNIA

THE STATE OF CALIFORNIA OR ITS OFFICERS OR AGENTS SHALL NOT BE RESPONSIBLE FOR THE ACCURACY OR COMPLETENESS OF SCANNED COPIES OF THIS PLAN SHEET.

NOTE:

1. FOR ACCURATE RIGHT OF WAY DATA, CONTACT RIGHT OF WAY ENGINEERING AT THE DISTRICT OFFICE.

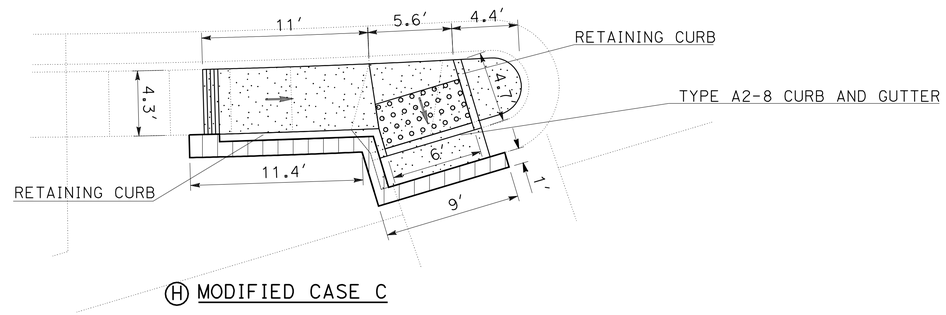

Ⓗ MODIFIED CASE C

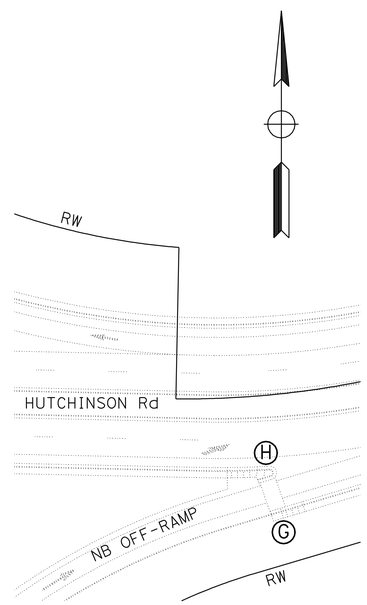

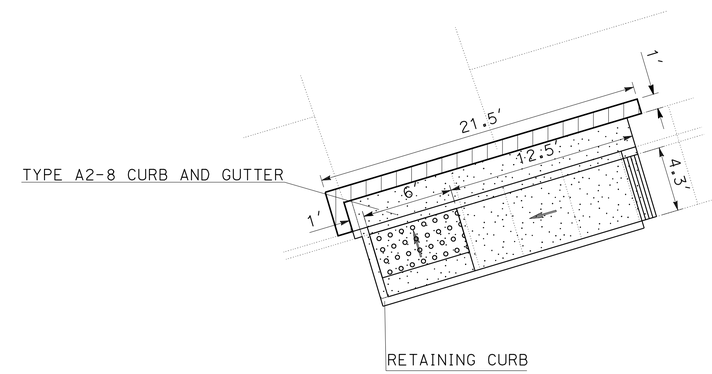

Ⓖ MODIFIED CASE C

LOCATION 1
HUTCHINSON Rd AND ROUTE 113

EXISTING UTILITY FACILITIES HAVE NOT BEEN PLOTTED ON THESE PLANS

CONSTRUCTION DETAILS

NO SCALE **C-3**

STATE OF CALIFORNIA - DEPARTMENT OF TRANSPORTATION
Caltrans
NORTH REGION
DIVISION OF ENGINEERING

FUNCTIONAL SUPERVISOR: FERMIN BARRIGA
CALCULATED-DESIGNED BY: H PARAS JR
CHECKED BY: S CHOWDHURY
REVISED BY
DATE REVISED

LAST REVISION 11-15-11
DATE PLOTTED => 08-MAR-2012
TIME PLOTTED => 14:02

Dist	COUNTY	ROUTE	POST MILES TOTAL PROJECT	SHEET No.	TOTAL SHEETS
03	Yol	113	R0.3/R10.3	5	44

REGISTERED CIVIL ENGINEER 1-24-12 DATE

1-30-12
PLANS APPROVAL DATE

REGISTERED PROFESSIONAL ENGINEER HORACIO PARAS JR No. C73255 Exp. 12-31-12 CIVIL STATE OF CALIFORNIA

THE STATE OF CALIFORNIA OR ITS OFFICERS OR AGENTS SHALL NOT BE RESPONSIBLE FOR THE ACCURACY OR COMPLETENESS OF SCANNED COPIES OF THIS PLAN SHEET.

NOTES:

FOR ACCURATE RIGHT OF WAY DATA, CONTACT RIGHT OF WAY ENGINEERING AT THE DISTRICT OFFICE.

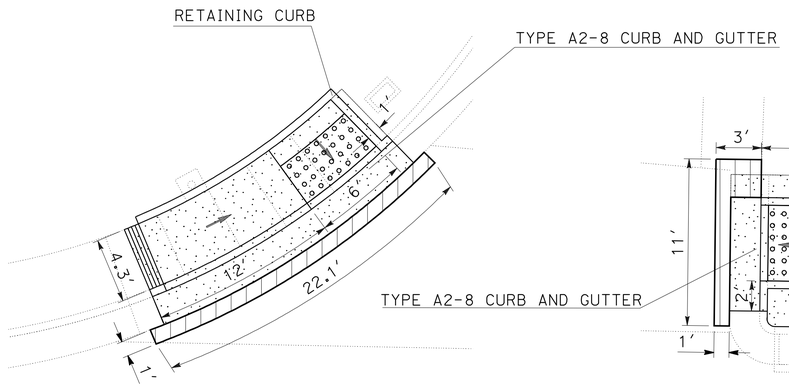

Ⓐ MODIFIED CASE C

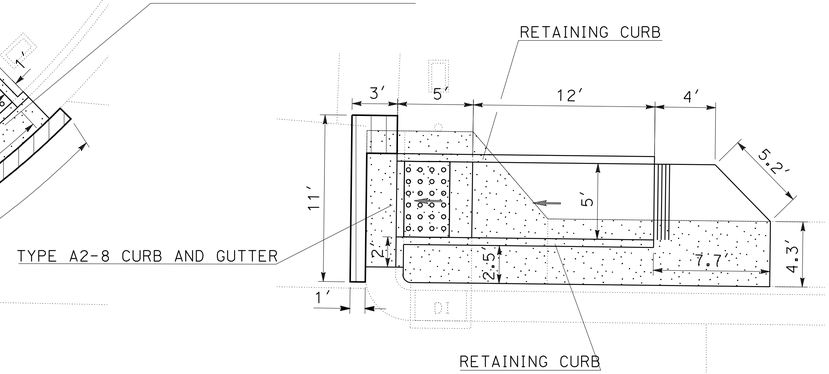

Ⓑ MODIFIED CASE C

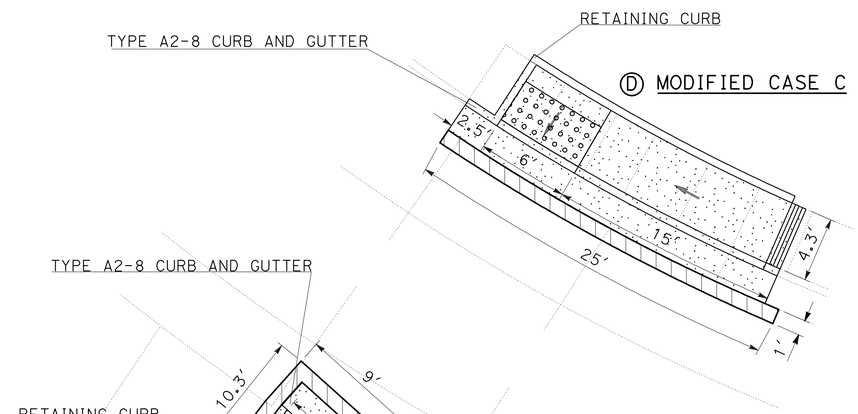

Ⓓ MODIFIED CASE C

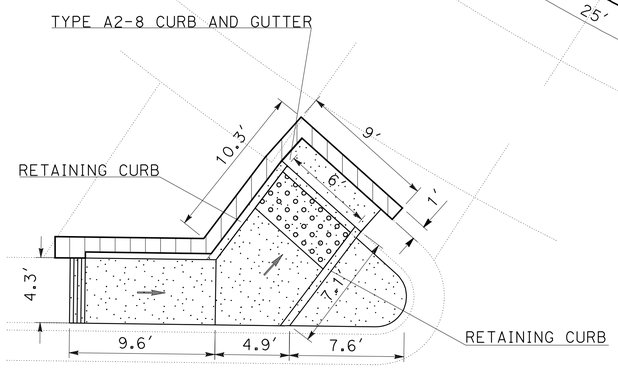

Ⓒ MODIFIED CASE C

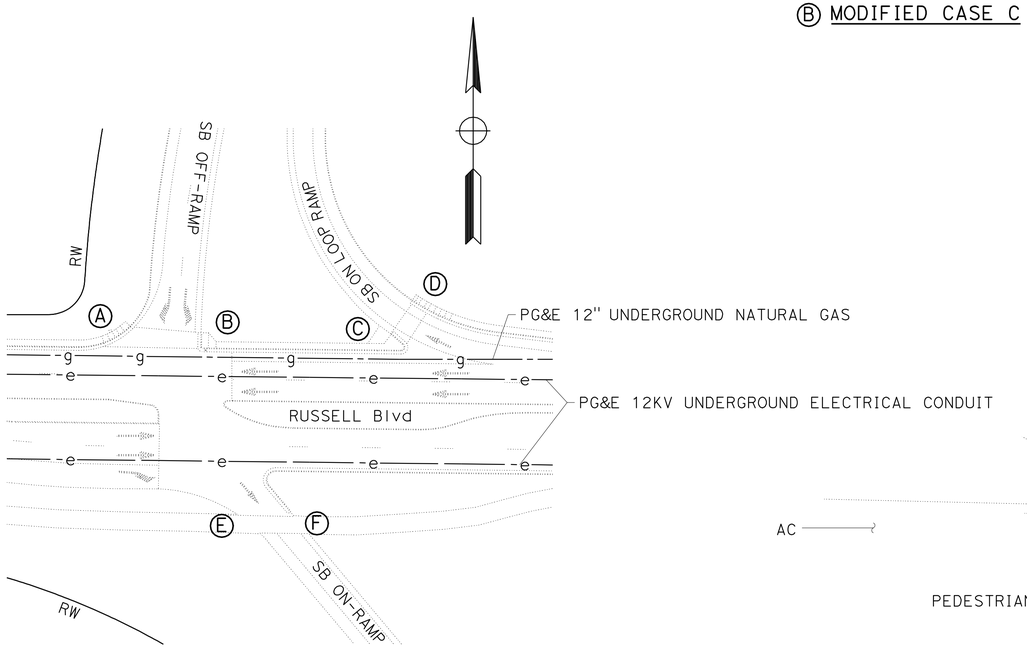

LOCATION (2)
RUSSELL Blvd AND ROUTE 113

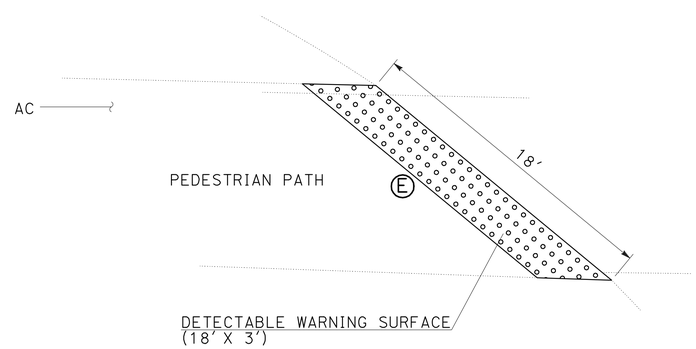

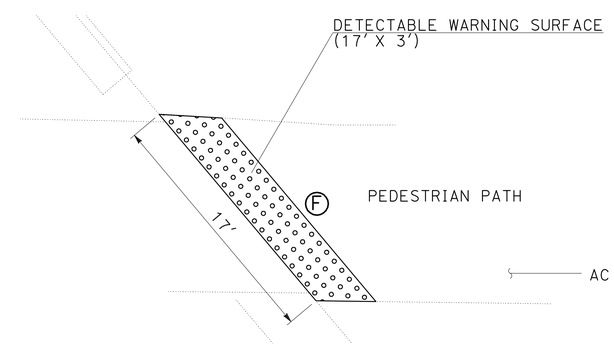

EXISTING UTILITY FACILITIES HAVE NOT BEEN PLOTTED ON PORTIONS OF THESE PLANS

CONSTRUCTION DETAILS

NO SCALE

C-4

STATE OF CALIFORNIA - DEPARTMENT OF TRANSPORTATION
Caltrans
NORTH REGION
DIVISION OF ENGINEERING

FUNCTIONAL SUPERVISOR: FERMIN BARRIGA
CALCULATED-DESIGNED BY: H PARAS JR
CHECKED BY: S CHOWDHURY
REVISED BY
DATE REVISED

LAST REVISION DATE PLOTTED => 08-MAR-2012
TIME PLOTTED => 14:02
01-23-12

Dist	COUNTY	ROUTE	POST MILES TOTAL PROJECT	SHEET No.	TOTAL SHEETS
03	Yol	113	R0.3/R10.3	6	44

REGISTERED CIVIL ENGINEER 1-24-12 DATE

1-30-12
PLANS APPROVAL DATE

REGISTERED PROFESSIONAL ENGINEER HORACIO PARAS JR No. C73255 Exp. 12-31-12 CIVIL STATE OF CALIFORNIA

THE STATE OF CALIFORNIA OR ITS OFFICERS OR AGENTS SHALL NOT BE RESPONSIBLE FOR THE ACCURACY OR COMPLETENESS OF SCANNED COPIES OF THIS PLAN SHEET.

NOTES:

FOR ACCURATE RIGHT OF WAY DATA, CONTACT RIGHT OF WAY ENGINEERING AT THE DISTRICT OFFICE.

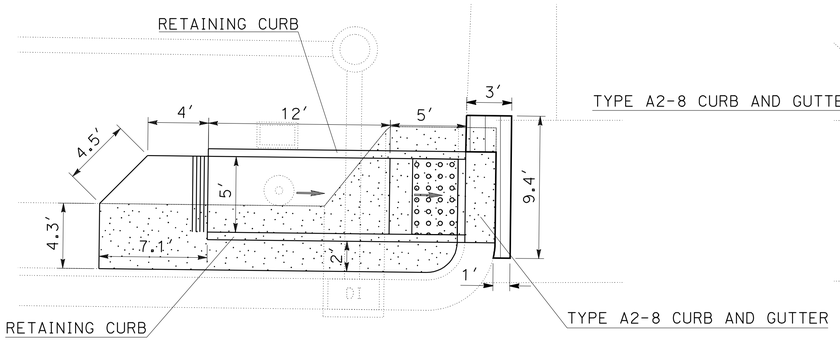

Ⓖ MODIFIED CASE C

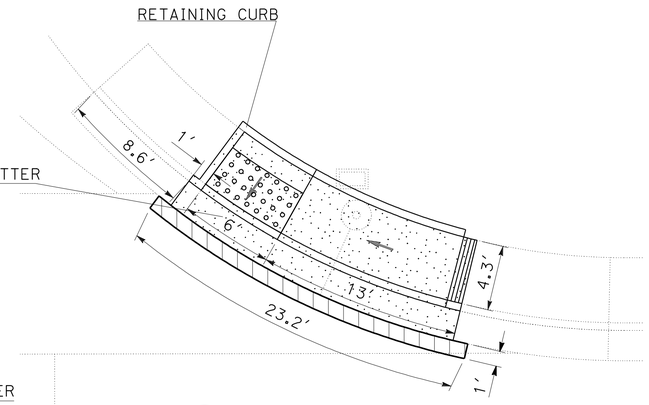

Ⓗ MODIFIED CASE C

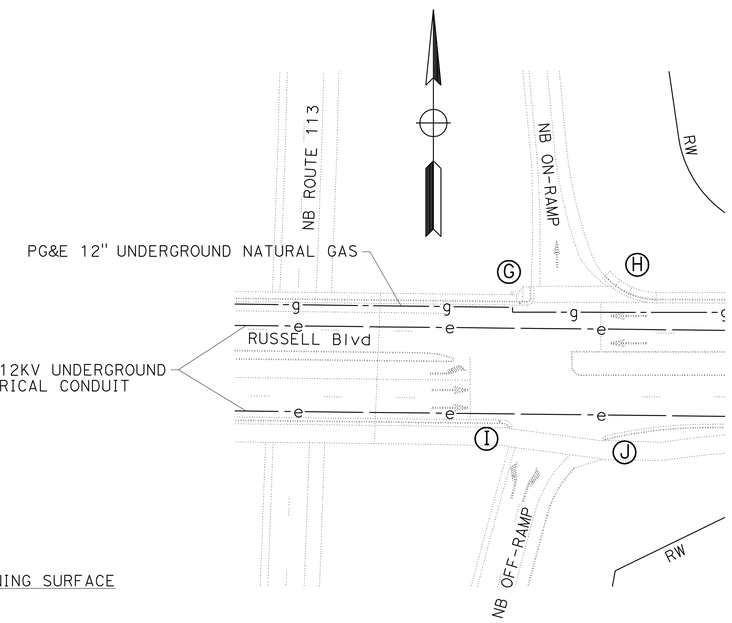

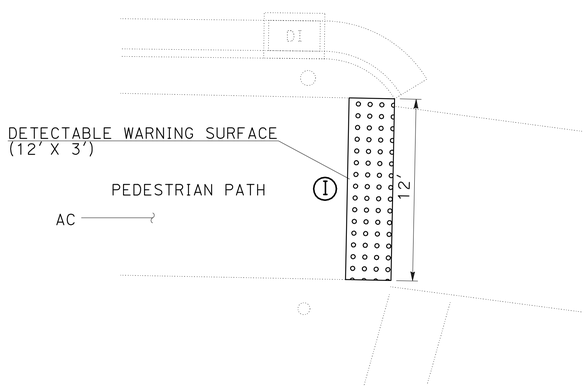

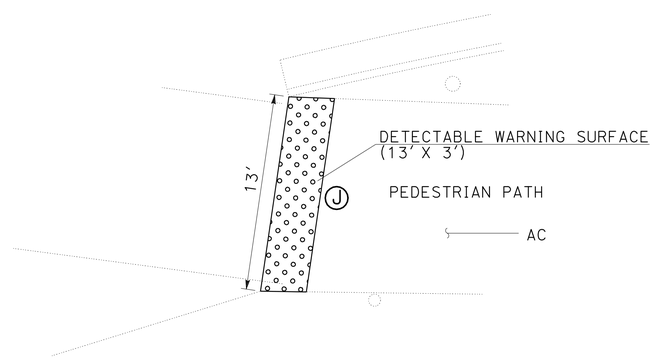

LOCATION 2
RUSSELL Blvd AND ROUTE 113

EXISTING UTILITY FACILITIES HAVE NOT BEEN PLOTTED ON PORTIONS OF THESE PLANS

CONSTRUCTION DETAILS

NO SCALE

C-5

STATE OF CALIFORNIA - DEPARTMENT OF TRANSPORTATION
Caltrans
NORTH REGION DIVISION OF ENGINEERING

FUNCTIONAL SUPERVISOR: FERMIN BARRIGA
CALCULATED-DESIGNED BY: H PARAS JR
CHECKED BY: S CHOWDHURY
REVISED BY
DATE REVISED

LAST REVISION 11-15-11
DATE PLOTTED => 08-MAR-2012
TIME PLOTTED => 14:02

Dist	COUNTY	ROUTE	POST MILES TOTAL PROJECT	SHEET No.	TOTAL SHEETS
03	Yol	113	R0.3/R10.3	7	44

REGISTERED CIVIL ENGINEER 1-24-12 DATE

1-30-12
PLANS APPROVAL DATE

REGISTERED PROFESSIONAL ENGINEER HORACIO PARAS JR No. C73255 Exp. 12-31-12 CIVIL STATE OF CALIFORNIA

THE STATE OF CALIFORNIA OR ITS OFFICERS OR AGENTS SHALL NOT BE RESPONSIBLE FOR THE ACCURACY OR COMPLETENESS OF SCANNED COPIES OF THIS PLAN SHEET.

NOTES:

1. FOR ACCURATE RIGHT OF WAY DATA, CONTACT RIGHT OF WAY ENGINEERING AT THE DISTRICT OFFICE.
2. LIMITLINE SHALL BE PLACED AS SHOWN OR AS DIRECTED BY THE ENGINEER.

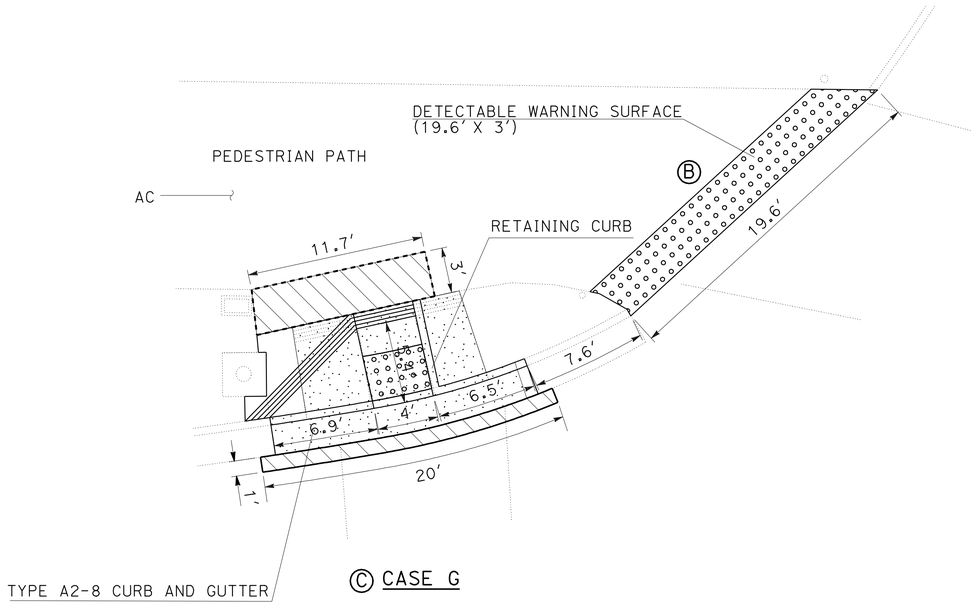

Ⓒ CASE G

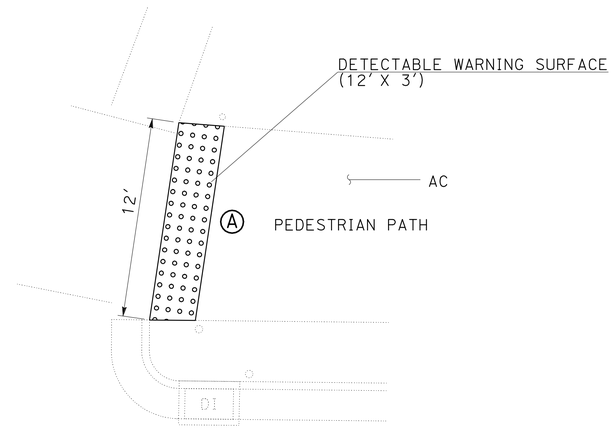

EXISTING UTILITY FACILITIES HAVE NOT BEEN PLOTTED ON PORTIONS OF THESE PLANS

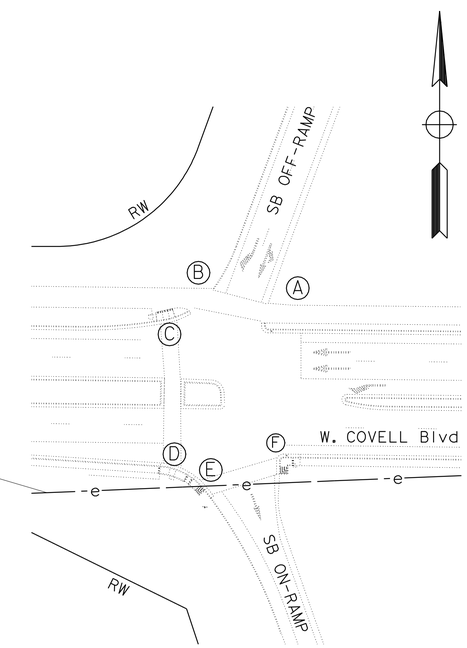

LOCATION 3
W. COVELL Blvd AND ROUTE 113

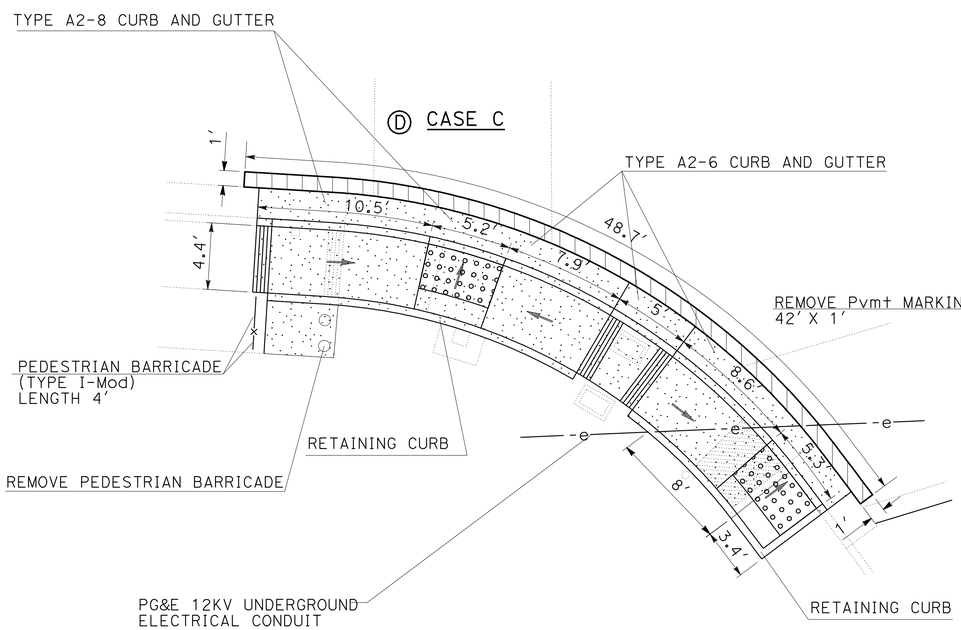

Ⓓ CASE C

Ⓔ MODIFIED CASE C

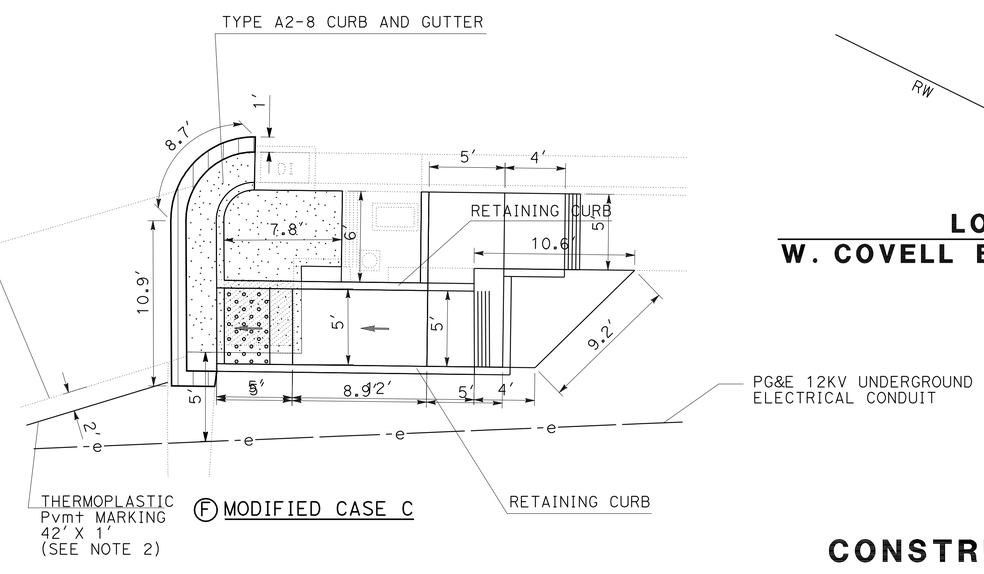

Ⓕ MODIFIED CASE C

CONSTRUCTION DETAILS

NO SCALE

C-6

STATE OF CALIFORNIA - DEPARTMENT OF TRANSPORTATION
NORTH REGION
DIVISION OF ENGINEERING
Caltrans

FUNCTIONAL SUPERVISOR: FERMIN BARRIGA
CALCULATED-DESIGNED BY: SALAHUDDIN CHOWDHURY
CHECKED BY: H PARAS JR
REVISED BY
DATE REVISED

LAST REVISION 01-23-12
DATE PLOTTED => 08-MAR-2012
TIME PLOTTED => 14:02

Dist	COUNTY	ROUTE	POST MILES TOTAL PROJECT	SHEET No.	TOTAL SHEETS
03	Yol	113	R0.3/R10.3	8	44

REGISTERED CIVIL ENGINEER 1-24-12 DATE

1-30-12
PLANS APPROVAL DATE

REGISTERED PROFESSIONAL ENGINEER HORACIO PARAS JR No. C73255 Exp. 12-31-12 CIVIL STATE OF CALIFORNIA

THE STATE OF CALIFORNIA OR ITS OFFICERS OR AGENTS SHALL NOT BE RESPONSIBLE FOR THE ACCURACY OR COMPLETENESS OF SCANNED COPIES OF THIS PLAN SHEET.

NOTES:

1. FOR ACCURATE RIGHT OF WAY DATA, CONTACT RIGHT OF WAY ENGINEERING AT THE DISTRICT OFFICE.
2. LIMITLINE SHALL BE PLACED AS SHOWN OR AS DIRECTED BY THE ENGINEER.

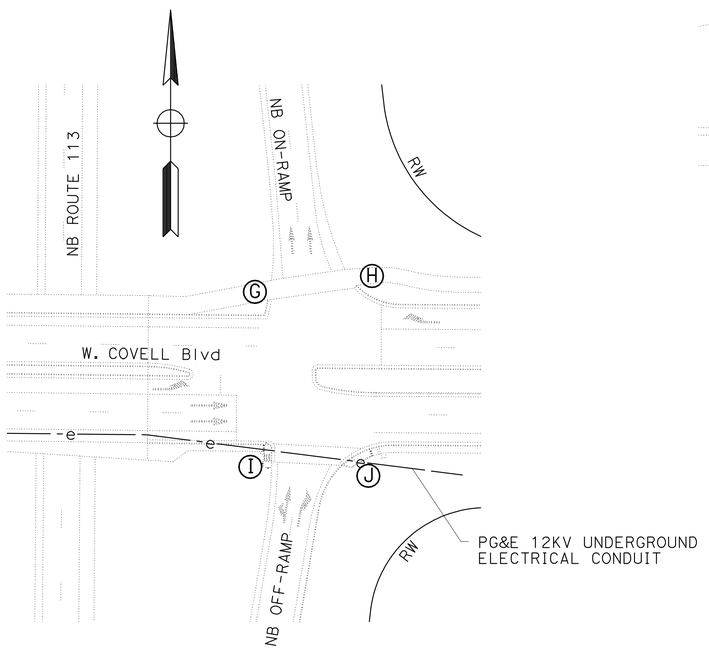

LOCATION (3)
W. COVELL Blvd AND ROUTE 113

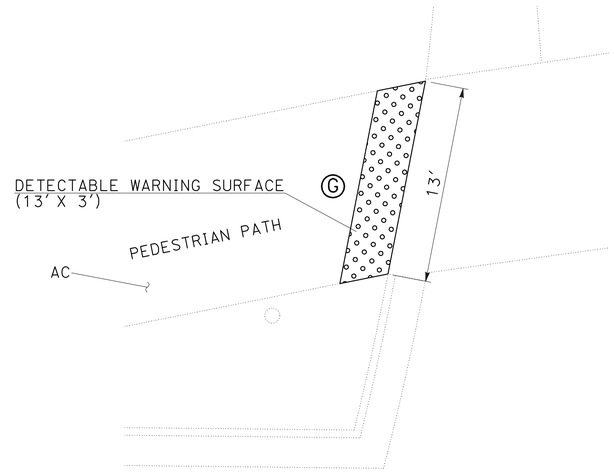

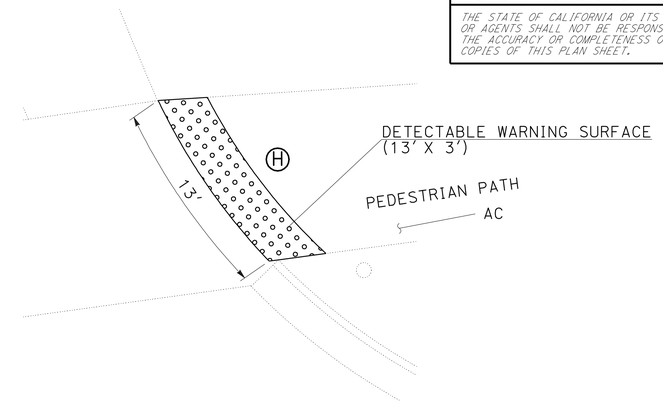

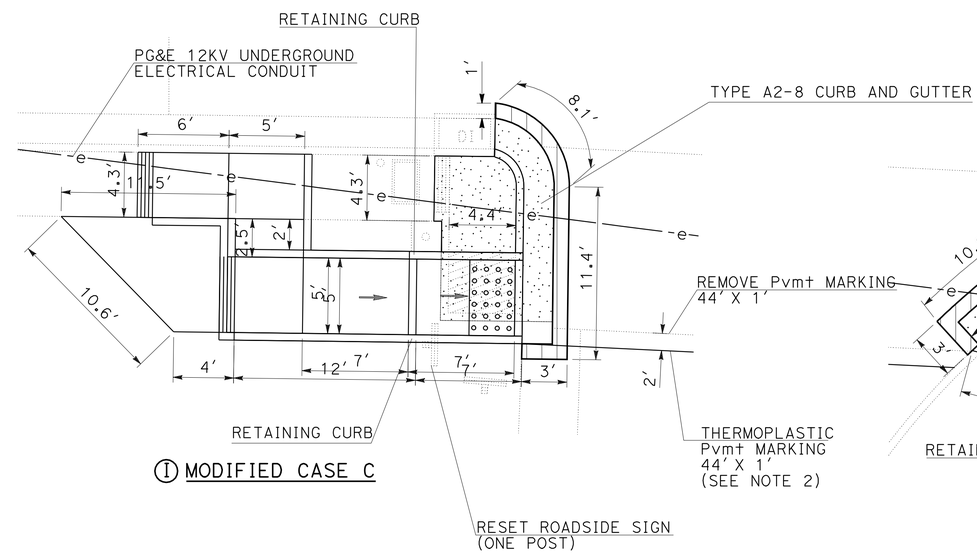

(I) MODIFIED CASE C

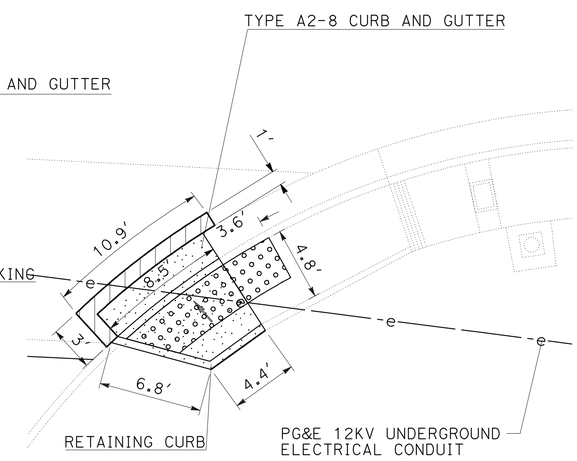

(J) MODIFIED CASE C

EXISTING UTILITY FACILITIES HAVE NOT BEEN PLOTTED ON PORTIONS OF THESE PLANS

CONSTRUCTION DETAILS

NO SCALE

C-7

STATE OF CALIFORNIA - DEPARTMENT OF TRANSPORTATION
NORTH REGION DIVISION OF ENGINEERING

FUNCTIONAL SUPERVISOR: FERMIN BARRIGA
CALCULATED-DESIGNED BY: H PARAS JR
CHECKED BY: S CHOWDHURY
REVISED BY / DATE REVISED

LAST REVISION 01-23-12
DATE PLOTTED => 08-MAR-2012
TIME PLOTTED => 14:02

Dist	COUNTY	ROUTE	POST MILES TOTAL PROJECT	SHEET No.	TOTAL SHEETS
03	Yol	113	R0.3/R10.3	9	44

REGISTERED CIVIL ENGINEER 1-24-12 DATE

1-30-12
PLANS APPROVAL DATE

REGISTERED PROFESSIONAL ENGINEER HORACIO PARAS JR No. C73255 Exp. 12-31-12 CIVIL STATE OF CALIFORNIA

THE STATE OF CALIFORNIA OR ITS OFFICERS OR AGENTS SHALL NOT BE RESPONSIBLE FOR THE ACCURACY OR COMPLETENESS OF SCANNED COPIES OF THIS PLAN SHEET.

NOTES:

1. FOR ACCURATE RIGHT OF WAY DATA, CONTACT RIGHT OF WAY ENGINEERING AT THE DISTRICT OFFICE.
2. LIMITLINE SHALL BE PLACED AS SHOWN OR AS DIRECTED BY THE ENGINEER.

Ⓐ MODIFIED CASE C

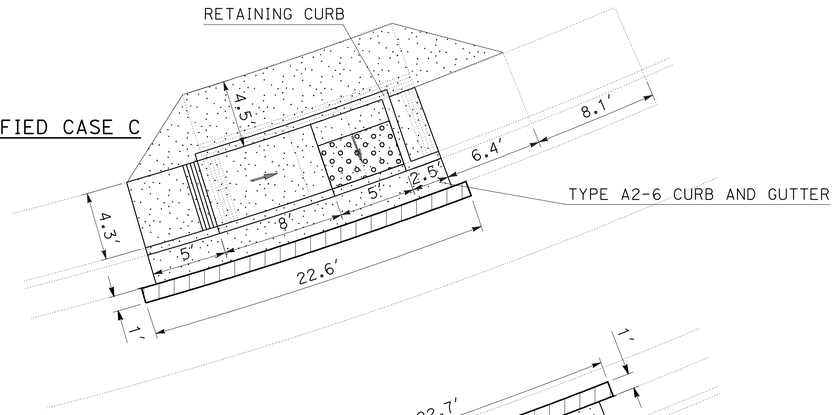

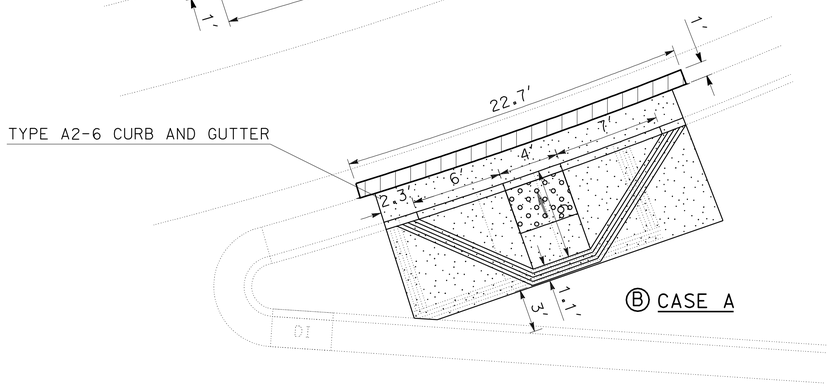

Ⓑ CASE A

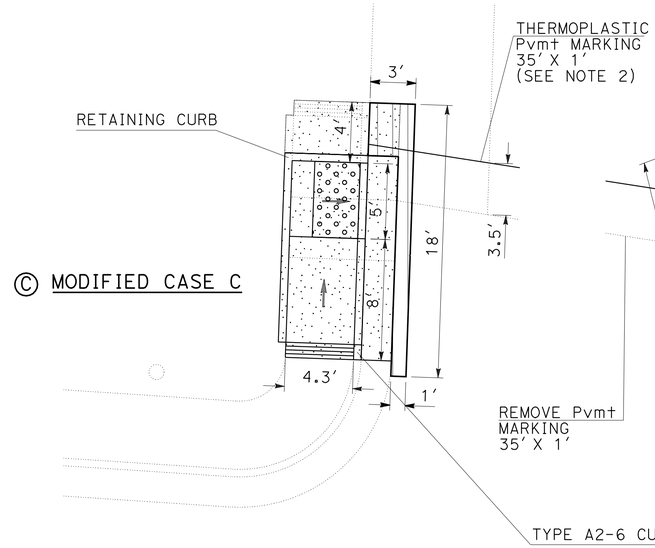

Ⓒ MODIFIED CASE C

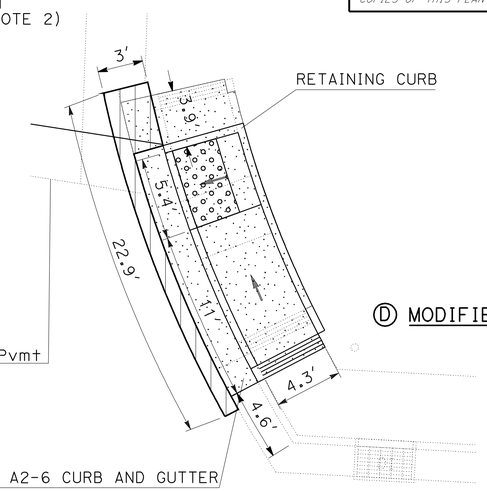

Ⓓ MODIFIED CASE C

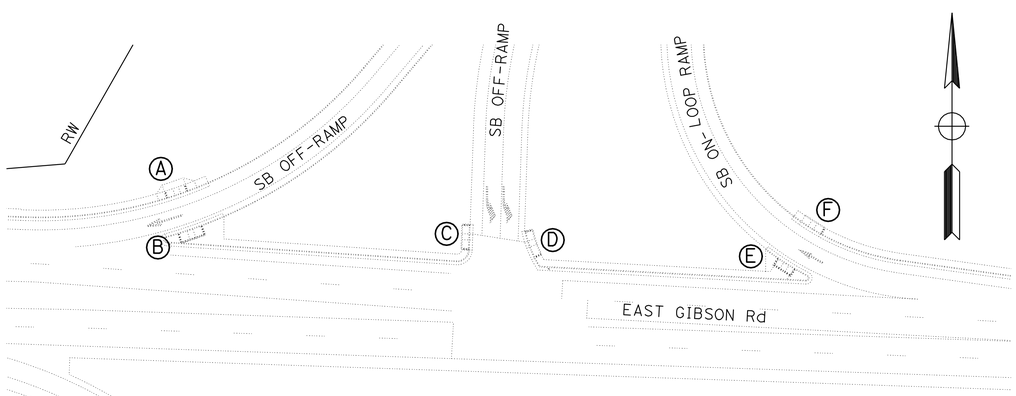

LOCATION 4
EAST GIBSON Rd AND ROUTE 113

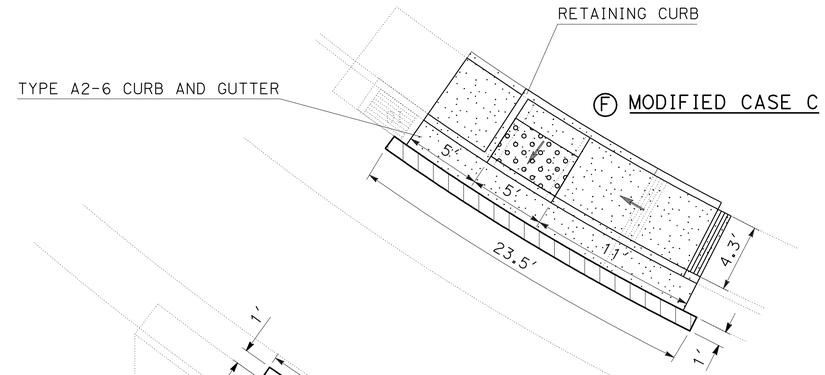

Ⓕ MODIFIED CASE C

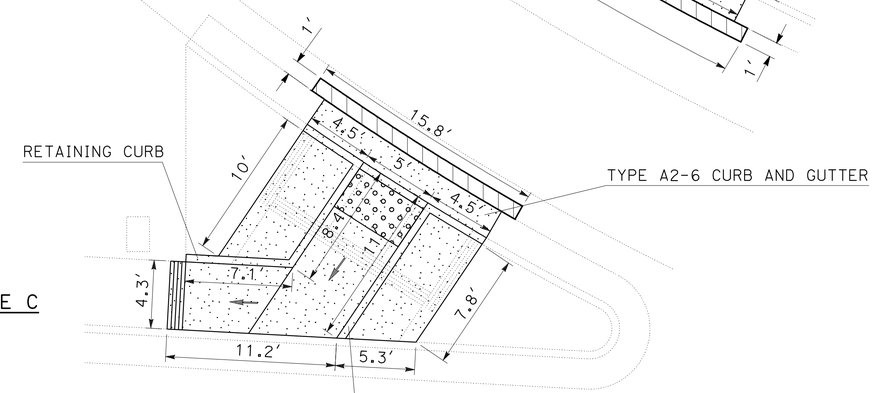

Ⓔ MODIFIED CASE C

EXISTING UTILITY FACILITIES HAVE NOT BEEN PLOTTED ON THESE PLANS

CONSTRUCTION DETAILS

NO SCALE

C-8

STATE OF CALIFORNIA - DEPARTMENT OF TRANSPORTATION
Caltrans
NORTH REGION
DIVISION OF ENGINEERING

FUNCTIONAL SUPERVISOR: FERMIN BARRIGA
CALCULATED-DESIGNED BY: H PARAS JR
CHECKED BY: S CHOWDHURY
REVISED BY
DATE REVISED

LAST REVISION 01-23-12
DATE PLOTTED => 08-MAR-2012
TIME PLOTTED => 14:02

Dist	COUNTY	ROUTE	POST MILES TOTAL PROJECT	SHEET No.	TOTAL SHEETS
03	Yol	113	R0.3/R10.3	10	44

REGISTERED CIVIL ENGINEER 1-24-12 DATE

1-30-12
PLANS APPROVAL DATE

REGISTERED PROFESSIONAL ENGINEER HORACIO PARAS JR No. C73255 Exp. 12-31-12 CIVIL STATE OF CALIFORNIA

THE STATE OF CALIFORNIA OR ITS OFFICERS OR AGENTS SHALL NOT BE RESPONSIBLE FOR THE ACCURACY OR COMPLETENESS OF SCANNED COPIES OF THIS PLAN SHEET.

NOTE:

1. FOR ACCURATE RIGHT OF WAY DATA, CONTACT RIGHT OF WAY ENGINEERING AT THE DISTRICT OFFICE.

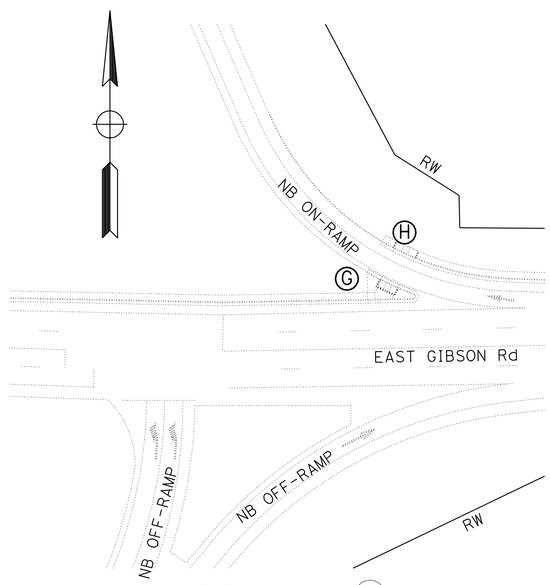

LOCATION 4
EAST GIBSON Rd AND ROUTE 113

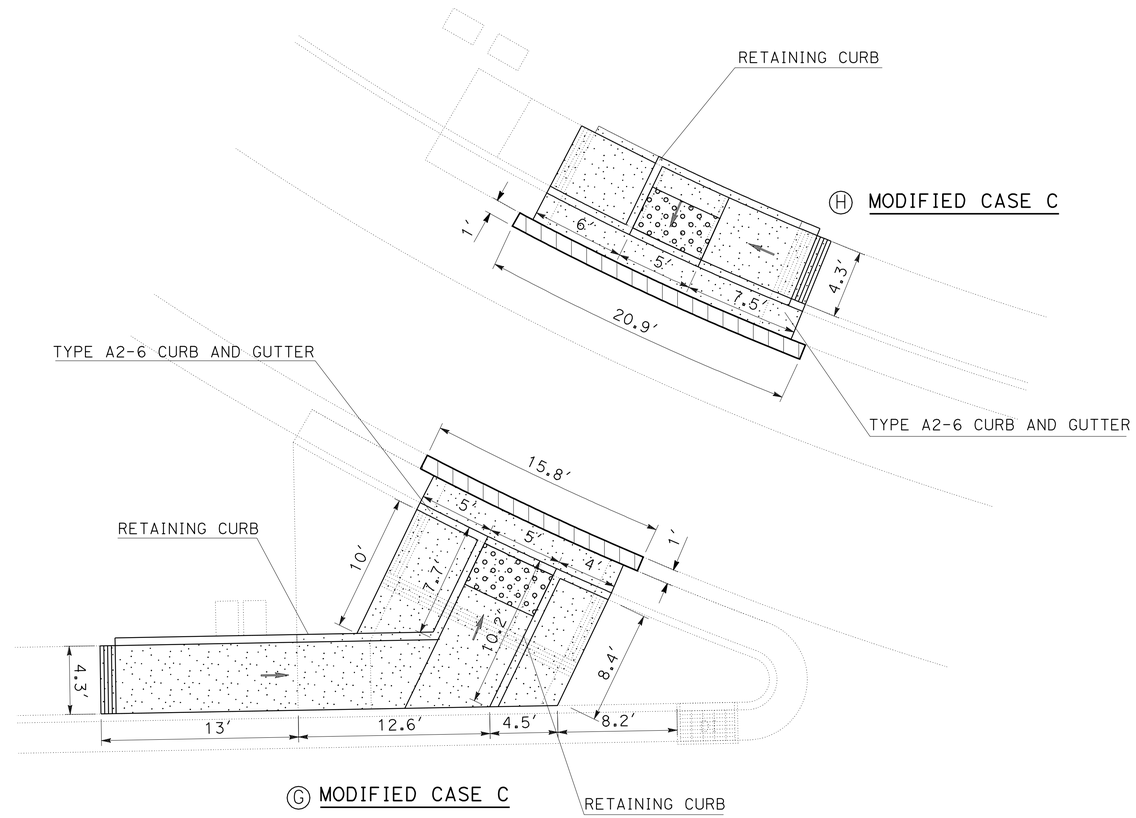

EXISTING UTILITY FACILITIES HAVE NOT BEEN PLOTTED ON THESE PLANS

CONSTRUCTION DETAILS

NO SCALE

C-9

STATE OF CALIFORNIA - DEPARTMENT OF TRANSPORTATION
Caltrans
NORTH REGION
DIVISION OF ENGINEERING

FUNCTIONAL SUPERVISOR: FERMIN BARRIGA
CALCULATED-DESIGNED BY: H PARAS JR
CHECKED BY: S CHOWDHURY
REVISED BY
DATE REVISED

LAST REVISION 01-03-12
DATE PLOTTED => 08-MAR-2012
TIME PLOTTED => 14:02

Dist	COUNTY	ROUTE	POST MILES TOTAL PROJECT	SHEET No.	TOTAL SHEETS
03	Yol	113	R0.3/R10.3	11	44

REGISTERED CIVIL ENGINEER 1-24-12 DATE

1-30-12
PLANS APPROVAL DATE

REGISTERED PROFESSIONAL ENGINEER HORACIO PARAS JR No. C73255 Exp. 12-31-12 CIVIL STATE OF CALIFORNIA

THE STATE OF CALIFORNIA OR ITS OFFICERS OR AGENTS SHALL NOT BE RESPONSIBLE FOR THE ACCURACY OR COMPLETENESS OF SCANNED COPIES OF THIS PLAN SHEET.

NOTE:

1. FOR ACCURATE RIGHT OF WAY DATA, CONTACT RIGHT OF WAY ENGINEERING AT THE DISTRICT OFFICE.

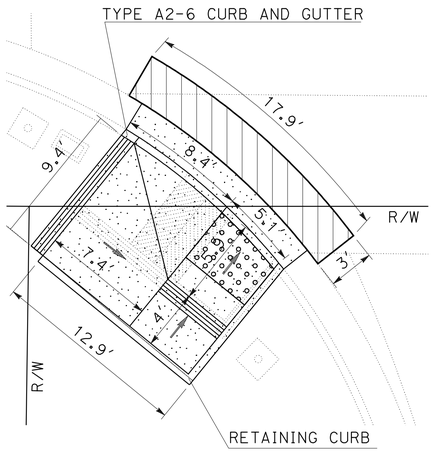

Ⓐ MODIFIED CASE B

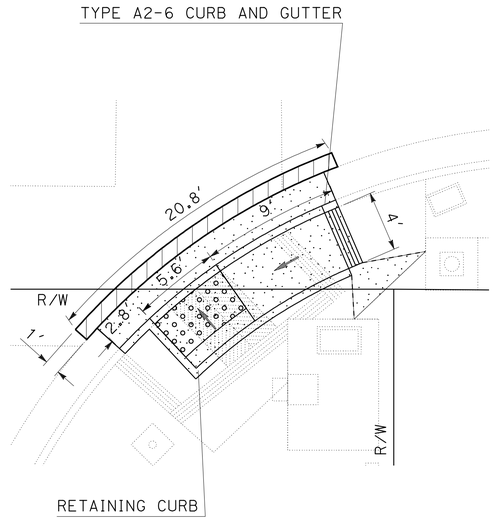

Ⓑ MODIFIED CASE C

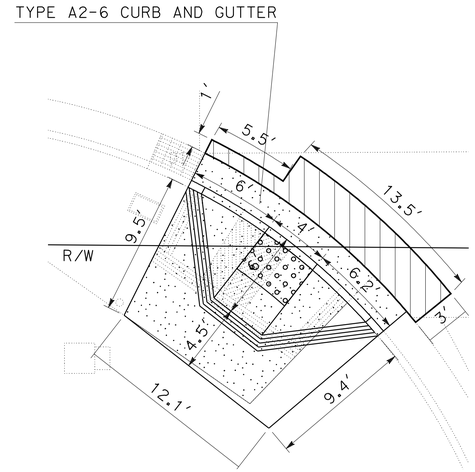

Ⓒ CASE A

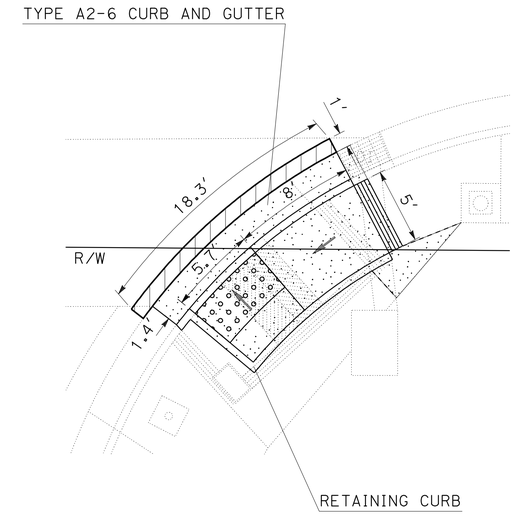

Ⓓ MODIFIED CASE C

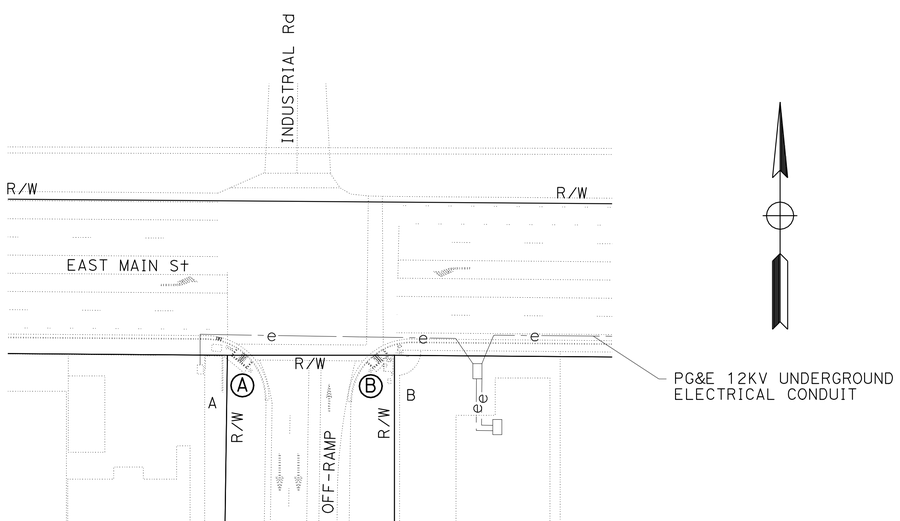

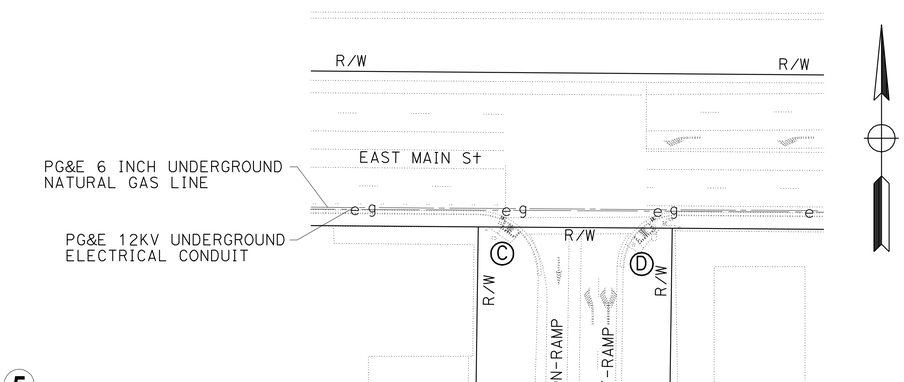

LOCATION 5
EAST MAIN St AND ROUTE 113

EXISTING UTILITY FACILITIES HAVE NOT BEEN PLOTTED ON PORTIONS OF THESE PLANS

CONSTRUCTION DETAILS

NO SCALE

C-10

STATE OF CALIFORNIA - DEPARTMENT OF TRANSPORTATION
Caltrans
NORTH REGION
DIVISION OF ENGINEERING

FUNCTIONAL SUPERVISOR: FERMIN BARRIGA
CALCULATED-DESIGNED BY: H PARAS JR
CHECKED BY: SALAHUDDIN CHOWDHURY
REVISED BY
DATE REVISED

LAST REVISION 01-23-12
DATE PLOTTED => 08-MAR-2012
TIME PLOTTED => 14:02

Dist	COUNTY	ROUTE	POST MILES TOTAL PROJECT	SHEET No.	TOTAL SHEETS
03	Yol	113	R0.3/R10.3	12	44

Salahuddin Chowdhury 1-24-12
REGISTERED CIVIL ENGINEER DATE

1-30-12
PLANS APPROVAL DATE

REGISTERED PROFESSIONAL ENGINEER SALAHUDDIN CHOWDHURY No. C75140 Exp. 12-31-11 CIVIL STATE OF CALIFORNIA

THE STATE OF CALIFORNIA OR ITS OFFICERS OR AGENTS SHALL NOT BE RESPONSIBLE FOR THE ACCURACY OR COMPLETENESS OF SCANNED COPIES OF THIS PLAN SHEET.

NOTE:

1. FOR ACCURATE RIGHT OF WAY DATA, CONTACT RIGHT OF WAY ENGINEERING AT THE DISTRICT OFFICE.

ADA CURB RAMP QUANTITIES

COUNTY ROUTE	PM	STREET	LOC	PLAN SHEET	ID	DIRECTION	REMOVE A2-8 CURB AND GUTTER (N) LF	REMOVE A2-6 CURB AND GUTTER (N) LF	REMOVE EXISTING RETAINING CURB (N) LF	REMOVE CONCRETE (CURB AND GUTTER) (N) CY	REMOVE CONCRETE (SIDEWALK AND CURB RAMP) (N) CY	REMOVE CONCRETE (CURB, GUTTER, AND SIDEWALK) (CY) CY	NEW A2-8 CURB AND GUTTER (N) LF	NEW A2-6 CURB AND GUTTER (N) LF	INSTALL NEW RETAINING CURB (N) LF	MINOR CONCRETE (CURB AND GUTTER) (N) CY	MINOR CONCRETE (SIDEWALK AND CURB RAMP) (N) CY	MINOR CONCRETE (CURB, SIDEWALK, AND CURB RAMP) CY	ROADWAY EXCAVATION CY	MINOR HOT MIX ASPHALT TON	CURB RAMP DETECTABLE WARNING SURFACE (N) SQYD	DETECTABLE WARNING SURFACE SQYD
YOL-113	R0.4	HUTCHINSON DRIVE	1	C-1	A	SB ON RAMP RT	22.5			1.44	1.19	2.62	22.5		26.1	1.44	1.29	3.05	0.48	1.01	2.00	
					B	SB ON RAMP LT	8.8			0.56	1.08	1.64	10.0		19.6	0.64	1.26	2.14	0.75	1.17	2.00	
				C-2	C	NB ON LOOP RT	24.0			1.53	1.25	2.78	24.0		27.4	1.53	1.38	3.25	0.52	1.10	2.00	
					D	NB ON LOOP LT	7.1			0.45	1.19	1.65	7.1		20.9	0.45	1.25	1.97	0.22	0.47	2.00	
					E	NB OFF RAMP LT	8.8			0.56	1.99	2.55	6.0		32.0	0.38	2.46	3.24	0.37	0.78	1.67	
					F	NB OFF RAMP RT	8.6			0.55	1.76	2.31	6.0		28.0	0.38	2.05	2.78	0.36	0.76	2.00	
				C-3	G	NB OFF RT TO E.	19.0			1.21	1.01	2.22	19.5		22.3	1.24	1.12	2.64	0.48	1.01	2.00	
					H	NB OFF LT TO E.	7.5			0.48	1.15	1.63	7.0		16.4	0.45	1.20	1.84	0.51	1.08	2.00	
YOL-113	R1.1	RUSSELL Blvd	2	C-4	A	SB OFF RAMP RT	19.0			1.21	0.95	2.16	19.0		20.3	1.21	1.02	2.49	0.45	0.94	2.00	
					B	SB OFF RAMP LT	9.0			0.57	1.78	2.35	7.5		34.0	0.48	2.41	3.31	0.33	0.69	1.67	
					C	SB ON LOOP LT	7.0			0.45	1.58	2.03	7.0		24.0	0.45	1.63	2.37	0.59	1.25	2.00	
					D	SB ON LOOP RT	23.5			1.50	1.22	2.72	23.5		25.0	1.50	1.24	3.05	0.49	1.04	2.00	
					E	SB ON RAMP RT																6.00
					F	SB ON RAMP LT																5.67
				C-5	G	NB ON RAMP LT	7.6			0.48	1.68	2.16	6.0		34.0	0.38	2.21	3.02	0.29	0.61	1.67	
					H	NB ON RAMP RT	20.0			1.28	0.98	2.25	20.0		21.8	1.28	1.08	2.63	0.47	0.99	2.00	
					I	NB OFF RAMP LT																4.30
					J	NB OFF RAMP RT																6.17
YOL-113	R2.1	W. COVELL Blvd	3	C-6	A	SB OFF RAMP LT																4.33
					B	SB OFF RAMP RT1																6.67
					C	SB OFF RAMP RT2	17.4			1.11	0.84	1.95	17.4		6.4	1.11	0.82	2.01	1.34	2.39	1.33	
					D-E	SB ON RAMP RT	43.0		34.5	2.74	2.24	5.41	21.5	21.5	39.6	1.37	2.48	4.34	0.98	2.07	3.50	
					F	SB ON RAMP LT	13.5		11.4	0.86	0.90	1.90	14.7		34.0	0.94	2.51	3.87	0.42	0.89	1.67	
				C-7	G	NB ON RAMP LT																4.32
					H	NB ON RAMP RT																4.32
					I	NB OFF RAMP LT	12.3		12.0	0.78	0.67	1.61	13.8		38.0	0.88	2.83	4.18	0.42	0.89	1.67	
					J	NB OFF RAMP RT	8.5		11.2	0.54	0.42	1.10	9.0		11.2	0.57	0.42	1.13	0.26	0.55	3.41	
SUBTOTAL SHEET Q-1							287.1		69.1	18.3	23.9	43.0	261.5	21.5	481.0	16.7	30.7	53.3	9.7	19.7	38.6	41.8

(N) NOT A SEPARATE PAY ITEM. FOR INFORMATION ONLY

SUMMARY OF QUANTITIES

Q-1

REVISED BY | DATE REVISED

SALAHUDDIN CHOWDHURY | H PARAS JR

CALCULATED-DESIGNED BY | CHECKED BY

FUNCTIONAL SUPERVISOR: FERMIN BARRIGA

STATE OF CALIFORNIA - DEPARTMENT OF TRANSPORTATION
Caltrans
NORTH REGION
DIVISION OF ENGINEERING

LAST REVISION 01-23-12 | DATE PLOTTED => 08-MAR-2012 | TIME PLOTTED => 14:02

Dist	COUNTY	ROUTE	POST MILES TOTAL PROJECT	SHEET No.	TOTAL SHEETS
03	Yol	113	R0.3/R10.3	13	44

Salahuddin Chowdhury 1-24-12
REGISTERED CIVIL ENGINEER DATE

1-30-12
PLANS APPROVAL DATE

REGISTERED PROFESSIONAL ENGINEER SALAHUDDIN CHOWDHURY No. C75140 Exp. 12-31-11 CIVIL STATE OF CALIFORNIA

THE STATE OF CALIFORNIA OR ITS OFFICERS OR AGENTS SHALL NOT BE RESPONSIBLE FOR THE ACCURACY OR COMPLETENESS OF SCANNED COPIES OF THIS PLAN SHEET.

NOTE:

1. FOR ACCURATE RIGHT OF WAY DATA, CONTACT RIGHT OF WAY ENGINEERING AT THE DISTRICT OFFICE.

ADA CURB RAMP QUANTITIES

LOCATION							REMOVE A2-8 CURB AND GUTTER	REMOVE A2-6 CURB AND GUTTER	REMOVE EXISTING RETAINING CURB	REMOVE CONCRETE (CURB AND GUTTER)	REMOVE CONCRETE (SIDEWALK AND CURB RAMP)	REMOVE CONCRETE (CURB, GUTTER, AND SIDEWALK) (CY)	NEW A2-8 CURB AND GUTTER	NEW A2-6 CURB AND GUTTER	INSTALL NEW RETAINING CURB	MINOR CONCRETE (CURB AND GUTTER)	MINOR CONCRETE (SIDEWALK AND CURB RAMP)	MINOR CONCRETE (CURB, SIDEWALK, AND CURB RAMP)	ROADWAY EXCAVATION	MINOR HOT MIX ASPHALT	CURB RAMP DETECTABLE WARNING SURFACE	DETECTABLE WARNING SURFACE
COUNTY ROUTE	PM	STREET	LOC	PLAN SHEET	ID	DIRECTION	(N) LF	(N) LF	(N) LF	(N) CY	(N) CY	CY	(N) LF	(N) LF	(N) LF	(N) CY	(N) CY	CY	CY	TON	(N) SQYD	SQYD
YOL-113	R9.2	EAST GIBSON ROAD	4	C-8	A	SB OFF RAMP RT		20.5		1.21	2.27	3.48		20.5	18.4	1.21	1.20	2.58	0.46	0.97	1.67	
					B	SB OFF RAMP LT		21.0		1.24	1.73	2.97		21.0		1.24	1.73	2.97	0.46	0.98	1.33	
					C	SB OFF RAMP RT		17.0	15.0	1.00	1.04	2.18		13.5	18.0	0.80	0.83	1.79	0.51	1.07	1.67	
					D	SB OFF RAMP LT		21.2	16.0	1.25	1.24	2.64		16.9	19.7	1.00	0.99	2.17	0.64	0.92	1.80	
					E	SB ON LOOP LT		14.0		0.83	2.12	2.95		14.0	26.2	0.83	2.21	3.27	0.32	0.68	1.67	
					F	SB ON LOOP RT		21.0	14.5	1.24	1.24	2.61		21.0	20.0	1.24	1.24	2.66	0.48	1.00	1.67	
				C-9	G	NB ON RAMP LT		14.0		0.83	2.94	3.76		14.0	37.3	0.83	2.94	4.11	0.32	0.68	1.67	
					H	NB ON RAMP RT		18.6	14.9	1.10	1.11	2.35		18.6	17.2	1.10	1.09	2.35	0.42	0.89	1.67	
YOL-113	R10.2	EAST MAIN STREET	5	C-10	A	SB ON RAMP RT		14.0		0.83	1.65	2.48		14.0	22.2	0.83	1.72	2.75	1.06	2.23	1.67	
					B	SB OFF RAMP RT		17.4		1.03	1.61	2.64		17.4	17.4	1.03	0.78	1.97	0.42	0.88	1.87	
					C	NB ON RAMP RT		16.2		0.96	1.38	2.33		16.2		0.96	1.70	2.66	0.91	1.91	1.33	
					D	NB OFF RAMP RT		15.1		0.89	1.16	2.05		15.1	17.4	0.89	1.16	2.21	0.35	0.74	1.90	
SUBTOTAL THIS SHEET								210.0	60.4	12.4	19.5	32.4		202.2	213.8	12.0	17.6	31.5	6.4	13.0	19.9	
SUBTOTAL SHEET Q-1							287.1		69.1	18.3	23.9	43.0	261.5	21.5	481.0	16.7	30.7	53.3	9.7	19.7	38.6	41.8
GRAND TOTALS							287.1	210.0	129.5	30.7	43.4	75.4	261.5	223.7	694.8	28.7	48.3	84.8	16.1	32.7	58.5	41.8

(N) NOT A SEPARATE PAY ITEM. FOR INFORMATION ONLY

ROADSIDE SIGN

LOCATION							RESET ROADSIDE SIGN (ONE POST)	COMMENTS
COUNTY ROUTE	PM	STREET	PLAN SHEET	ID	LOC	DIRECTION	EA	
YOL-113	R0.4	HUTCHINSON Dr	C-2	E	1	NB OFF RAMP LT	1	MOVE "ONE WAY" SIGN 4 FT
			C-2	F	1	NB OFF RAMP RT	1	MOVE "ONE WAY" SIGN 4 FT
	R2.1	W. COVELL Blvd	C-7	I	3	NB OFF RAMP LT	1	MOVE "ONE WAY" SIGN 3 FT
TOTAL							3	

THERMOPLASTIC PAVEMENT MARKING

LOCATION							THERMOPLASTIC PAVEMENT MARKING	REMOVE THERMOPLASTIC PAVEMENT MARKING	COMMENTS
COUNTY ROUTE	PM	STREET	PLAN SHEET	ID	LOC	DIRECTION	SQFT	SQFT	
YOL-113	R2.1	W. COVELL Blvd	C-7	I/J	3	NB OFF RAMP LT/RT	44.0	44.0	SHIFT (2 FT) OF LIMIT LINE
			C-6	E/F	3	SB ON RAMP RT/LT	42.0	42.0	SHIFT (2 FT) OF LIMIT LINE
	R9.2	EAST GIBSON Rd	C-8	C/D	4	SB OFF RAMP RT/LT	35.0	35.0	SHIFT (3.5 FT) OF LL.
TOTAL							121.0	121.0	

PEDESTRIAN BARRICADE

LOCATION							REMOVE PEDESTRIAN BARRICADE	PEDESTRIAN BARRICADE (TYPE I- MODIFIED)	COMMENTS
COUNTY ROUTE	PM	STREET	PLAN SHEET	ID	LOC	DIRECTION	EA	EA	
YOL-113	R2.1	W. COVELL Blvd	C-6	D	3	SB ON RAMP RT	1	1	PEDESTRIAN BARRICADE (TYPE I-MOD) IS 4 FT WIDE. SEE STD PLAN ES-7P.
	TOTAL						1	1	

SUMMARY OF QUANTITIES

Q-2

REVISED BY	DATE REVISED

CALCULATED-DESIGNED BY: SALAHUDDIN CHOWDHURY
CHECKED BY: H PARAS JR
FUNCTIONAL SUPERVISOR: FERMIN BARRIGA

STATE OF CALIFORNIA - DEPARTMENT OF TRANSPORTATION
NORTH REGION DIVISION OF ENGINEERING
Caltrans

LAST REVISION 01-23-12 | DATE PLOTTED => 08-MAR-2012 | TIME PLOTTED => 14:02

Dist	COUNTY	ROUTE	POST MILES TOTAL PROJECT	SHEET No.	TOTAL SHEETS
03	Yol	113	R0.3/R10.3	14	44

H. Golban 1-24-12
REGISTERED ELECTRICAL ENGINEER DATE

1-30-12
PLANS APPROVAL DATE

REGISTERED PROFESSIONAL ENGINEER HABIB GOLBAN No. E-17928 Exp. 9-30-12 ELECTRICAL STATE OF CALIFORNIA

THE STATE OF CALIFORNIA OR ITS OFFICERS OR AGENTS SHALL NOT BE RESPONSIBLE FOR THE ACCURACY OR COMPLETENESS OF SCANNED COPIES OF THIS PLAN SHEET.

PROJECT NOTES:

(THIS SHEET ONLY)

1. 1½"C, 2#6.
2. 1½"C, 2#4.
3. 2"C, 2#6.
4. 1½"C, 2#6, 3#14.
5. 1½"C, 2#12.
6. 1½"C, 3#2.
7. Exist TYPE III SERVICE EQUIPMENT ENCLOSURE No.03-SP-B-T-21.
   3 PHASE, 277/480 V, 4 WIRE (NO METERED).
   Exist LOAD: 9-310 W HPS
   LOAD AFTER MODIFICATION: 10-310 W HPS
8. TO Exist PAD SURFACE MOUNTED TRANSFORMER (PG&E).
   3 PHASE 277/480 V, 4 WIRE.
9. 2"C, 2#6.
10. ADJUST PULL BOX TO NEW OG.

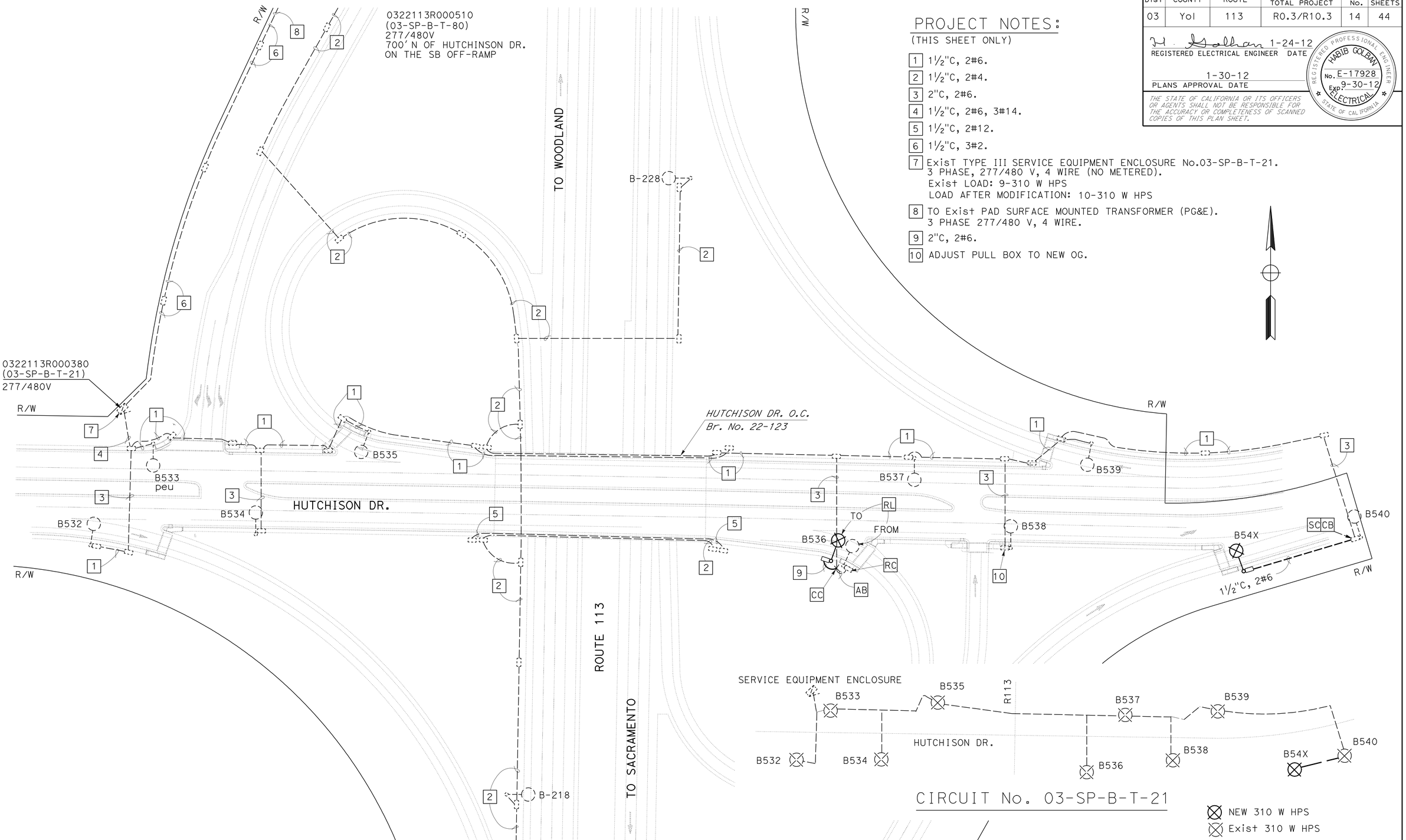

CIRCUIT No. 03-SP-B-T-21

NOTES:

FOR ACCURATE RIGHT OF WAY AND ACCESS DATA, CONTACT RIGHT OF WAY ENGINEERING AT THE DISTRICT OFFICE.

APPROVED FOR ELECTRICAL WORK ONLY.

MODIFY LIGHTING
HUTCHISON DR O.C.

SCALE: 1" = 50'

E-1

STATE OF CALIFORNIA - DEPARTMENT OF TRANSPORTATION
Caltrans

FUNCTIONAL SUPERVISOR: NELSON LEE

CALCULATED-DESIGNED BY: YOUNG TON
CHECKED BY: HABIB GOLBAN

REVISED BY
DATE REVISED

LAST REVISION 01-12-12
DATE PLOTTED => 08-MAR-2012
TIME PLOTTED => 14:02

Dist	COUNTY	ROUTE	POST MILES TOTAL PROJECT	SHEET No.	TOTAL SHEETS
03	Yol	113	R0.3/R10.3	15	44

H. Golban 1-24-12
REGISTERED ELECTRICAL ENGINEER

1-30-12
PLANS APPROVAL DATE

REGISTERED PROFESSIONAL ENGINEER HABIB GOLBAN No. E-17928 Exp. 9-30-12 ELECTRICAL STATE OF CALIFORNIA

THE STATE OF CALIFORNIA OR ITS OFFICERS OR AGENTS SHALL NOT BE RESPONSIBLE FOR THE ACCURACY OR COMPLETENESS OF SCANNED COPIES OF THIS PLAN SHEET.

NOTE:

FOR ACCURATE RIGHT OF WAY DATA, CONTACT RIGHT OF WAY ENGINEERING AT THE DISTRICT OFFICE.

PROJECT NOTES (THIS SHEET ONLY)

1. RC EXIST PPB POST
2. AB
3. INSTALL PPB POST
4. 2"C, 2#14
5. RC EXIST PPB INSTALL PPB.

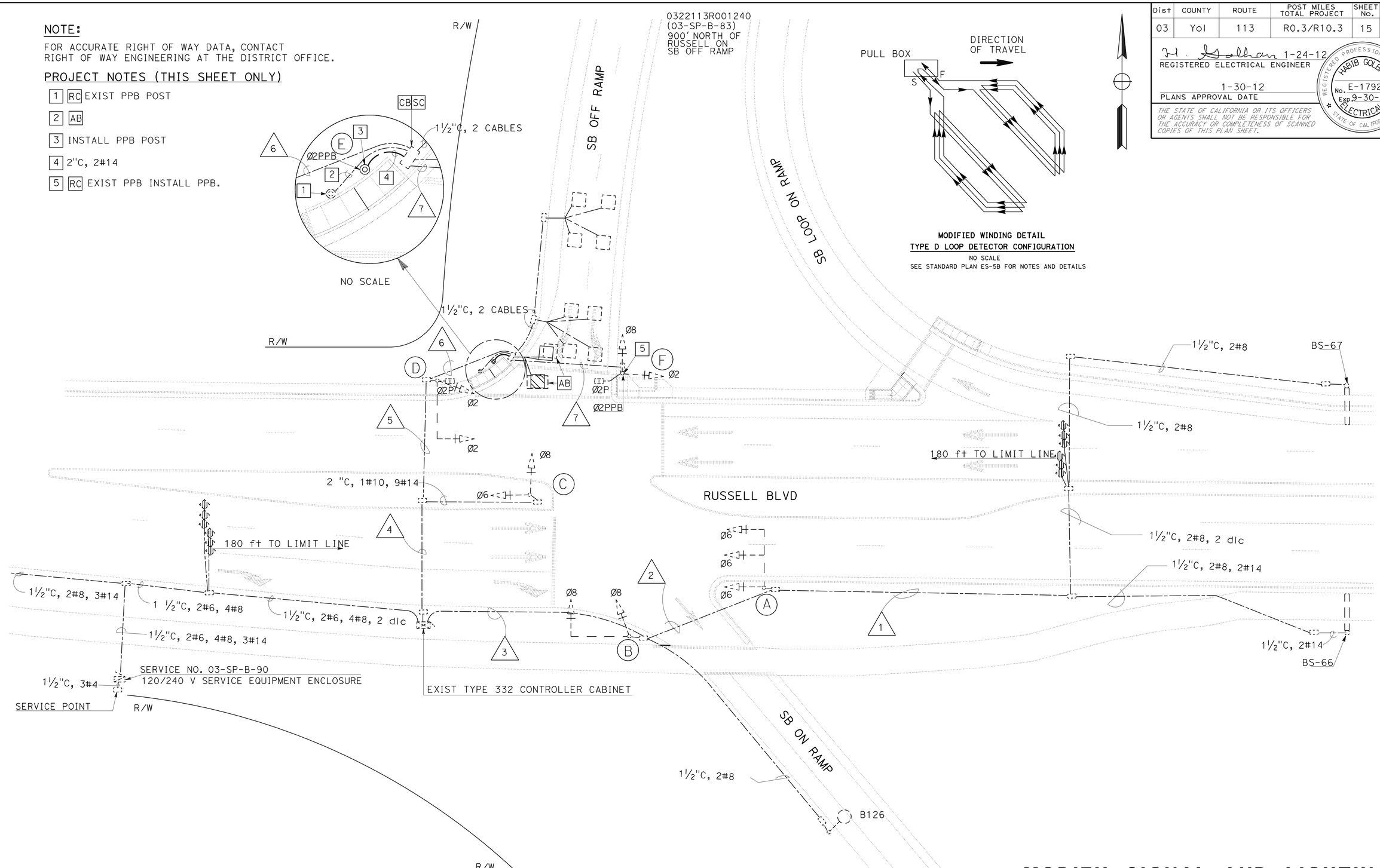

APPROVED FOR ELECTRICAL WORK ONLY

MODIFY SIGNAL AND LIGHTING S/B ON AND OFF RAMPS LOCATION 2

SCALE: 1"=20'

E-2

REVISED BY	DATE REVISED
OANH D. NGUYEN	HABIB GOLBAN

CALCULATED-DESIGNED BY / CHECKED BY

FUNCTIONAL SUPERVISOR: NELSON LEE

STATE OF CALIFORNIA - DEPARTMENT OF TRANSPORTATION

Caltrans

LAST REVISION 01-12-12 | DATE PLOTTED => 08-MAR-2012 | TIME PLOTTED => 14:02

Dist	COUNTY	ROUTE	POST MILES TOTAL PROJECT	SHEET No.	TOTAL SHEETS
03	Yol	113	R0.3/R10.3	16	44

H. Golban 1-24-12
REGISTERED ELECTRICAL ENGINEER

1-30-12
PLANS APPROVAL DATE

REGISTERED PROFESSIONAL ENGINEER HABIB GOLBAN No. E-17928 Exp. 9-30-12 ELECTRICAL STATE OF CALIFORNIA

THE STATE OF CALIFORNIA OR ITS OFFICERS OR AGENTS SHALL NOT BE RESPONSIBLE FOR THE ACCURACY OR COMPLETENESS OF SCANNED COPIES OF THIS PLAN SHEET.

EXISTING CONDUIT AND CONDUCTOR SCHEDULE

AWG OR CABLE	CONDUCTOR DESIGNATION	CONDUIT RUN NUMBER						
		1	2	3	4	5	6	7
#14	Ø6&2 SIGNAL		3	3	6	3	3	3
	Ø8 SIGNAL			3	6	3	3	3
	Ø2P PED SIGNAL				2	2	2	2
	Ø2PPB				2	2	2	2
	SPARES		3	3	6	3	3	3
	TOTAL #14		6	9	22	13	13	13
#10	SIGNAL COMMON		1	1	1	1	1	1
#8	LUMINAIRE	2	2	2				
MLC	Ø2	2	2	2				
	Ø6	2	2	2				
DLC	Ø8				3	3	3	
	SIGNAL INTERCONNECT	2	2	2				
	CONDUIT SIZE	1½"	2"	2"	2½"	2½"	2"	2"

MODIFIED POLE AND EQUIPMENT SCHEDULE

No.	STANDARD			VEH SIG MTG			PED SIGNAL		PPB	
	TYPE	SMA (FEET)	LMA (FEET)	Ø	TYPE	MTG	TYPE	MTG	Ø	ARROW
A	18-3-100	25		6	SV-1-T	M-1 M-2 B-1				
B	16-2-100	20		8	SV-1-T	M-1 B-1				
C	1-B			6 8	TV-2-T	SV-2-T		SP-1-T		
D	16-2-100	25		2	SV-1-T	M-1 B-1	1W2C			
E	PPBP*								2	→
F	1-B			2 8	TV-2-T	SV-2-T	1W2C	SP-1-T	2	←

* NEW PPB POST

MODIFY SIGNAL AND LIGHTING S/B ON AND OFF RAMPS LOCATION 2

APPROVED FOR ELECTRICAL WORK ONLY

E-3

STATE OF CALIFORNIA - DEPARTMENT OF TRANSPORTATION
Caltrans

FUNCTIONAL SUPERVISOR: NELSON LEE
CALCULATED-DESIGNED BY: OANH D. NGUYEN
CHECKED BY: HABIB GOLBAN
REVISED BY
DATE REVISED

LAST REVISION 01-12-12
DATE PLOTTED => 08-MAR-2012
TIME PLOTTED => 14:02

Dist	COUNTY	ROUTE	POST MILES TOTAL PROJECT	SHEET No.	TOTAL SHEETS
03	Yol	113	R0.3/R10.3	17	44

H. Golban 1-24-12
REGISTERED ELECTRICAL ENGINEER

1-30-12
PLANS APPROVAL DATE

REGISTERED PROFESSIONAL ENGINEER HABIB GOLBAN No. E-17928 Exp. 9-30-12 ELECTRICAL STATE OF CALIFORNIA

THE STATE OF CALIFORNIA OR ITS OFFICERS OR AGENTS SHALL NOT BE RESPONSIBLE FOR THE ACCURACY OR COMPLETENESS OF SCANNED COPIES OF THIS PLAN SHEET.

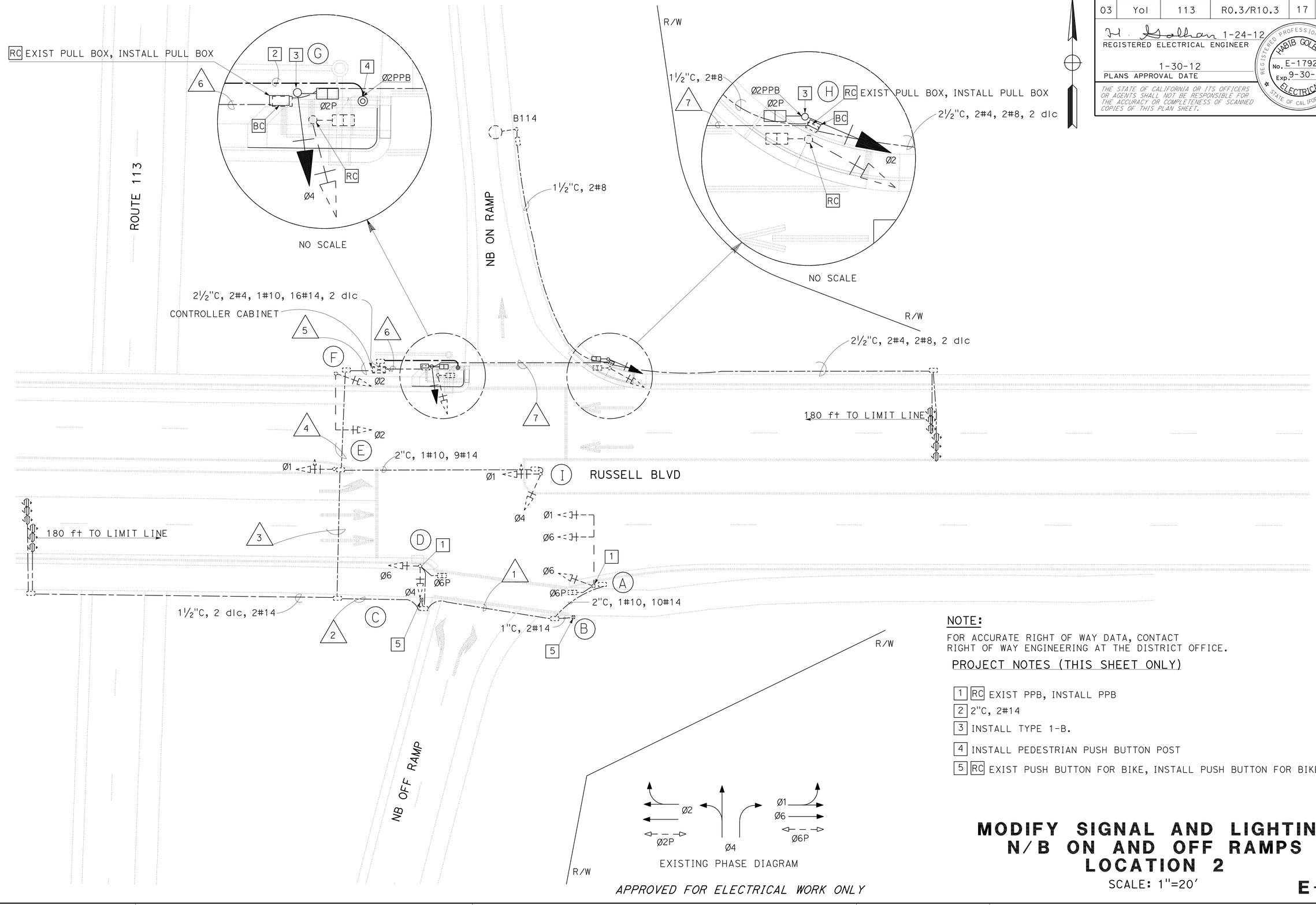

APPROVED FOR ELECTRICAL WORK ONLY

NOTE:

FOR ACCURATE RIGHT OF WAY DATA, CONTACT
RIGHT OF WAY ENGINEERING AT THE DISTRICT OFFICE.

PROJECT NOTES (THIS SHEET ONLY)

1 RC EXIST PPB, INSTALL PPB
2 2"C, 2#14
3 INSTALL TYPE 1-B.
4 INSTALL PEDESTRIAN PUSH BUTTON POST
5 RC EXIST PUSH BUTTON FOR BIKE, INSTALL PUSH BUTTON FOR BIKE

MODIFY SIGNAL AND LIGHTING N/B ON AND OFF RAMPS LOCATION 2

SCALE: 1"=20'

E-4

STATE OF CALIFORNIA - DEPARTMENT OF TRANSPORTATION
Caltrans

FUNCTIONAL SUPERVISOR: NELSON LEE
CALCULATED-DESIGNED BY: OANH D. NGUYEN
CHECKED BY: HABIB GOLBAN
REVISED BY
DATE REVISED

LAST REVISION 01-12-12
DATE PLOTTED => 08-MAR-2012
TIME PLOTTED => 14:02

Dist	COUNTY	ROUTE	POST MILES TOTAL PROJECT	SHEET No.	TOTAL SHEETS
03	Yol	113	R0.3/R10.3	18	44

H. Golban 1-24-12
REGISTERED ELECTRICAL ENGINEER

1-30-12
PLANS APPROVAL DATE

REGISTERED PROFESSIONAL ENGINEER HABIB GOLBAN No. E-17928 Exp. 9-30-12 ELECTRICAL STATE OF CALIFORNIA

THE STATE OF CALIFORNIA OR ITS OFFICERS OR AGENTS SHALL NOT BE RESPONSIBLE FOR THE ACCURACY OR COMPLETENESS OF SCANNED COPIES OF THIS PLAN SHEET.

EXISTING CONDUIT AND CONDUCTOR SCHEDULE

AWG OR CABLE	CONDUCTOR DESIGNATION	CONDUIT RUN NUMBER						
		1	2	3	4	5	6	7
#14	Ø2 SIGNAL		3	3	6	3	3	3
	Ø4 SIGNAL			3	6	3	3	3
	Ø1 SIGNAL				3	3	3	3
	Ø (6) SIGNAL	3	3	3	3	3		
	Ø2 PED SIGNAL						2	2
	Ø(6P) PED SIGNAL	2	2	2	2	2		
	Ø2 PPB	2	2	2	2	2	2	2
	SPARES	3	3	3	6	3	3	3
	TOTAL #14	10	13	16	28	19	16	16
#10	SIGNAL COMMON	1	1	1	1	1	1	1
#4	SIGNAL POWER						2	2
MLC	Ø2						2	2
	Ø6			2	2	2		
DLC	Ø1				1	1		
	Ø2	1	1	1	2	3		
SIC	SIGNAL INTERCONNECT			2	2	2		
	CONDUIT SIZE	2½"	2½"	2½"	2½"	2½"	2½"	2½"

MODIFIED POLE AND EQUIPMENT SCHEDULE

No.	STANDARD			VEH SIG MTG			PED SIGNAL		PPB	
	TYPE	SMA (FEET)	LMA (FEET)	Ø	TYPE	MTG	TYPE	MTG	Ø	ARROW
A	23-3-100**	35		2	SV-1-T	M-1 M-2 B-1	1W2C	W-O	A	←
B	PPBP								6	→
C	PPBP								6	←
D	1-B**			2 4	TV-2-T	A-4	1W2C	W-O		
E	1-B			1	TV-1-T	A-2				
F	23-3-100	25		2	SV-1-T	M-1 B-1				
G	1-B*			4	TV-1-T	A-1	1W2C	W-O	2	→
H	1-B			2	TV-3-T	A-1	1W2C	W-O	2	←
I	1-B			1 4	TV-2-T	A-4				

* NEW TYPE 1-B
** RC EXIST PPB; INSTALL PPB

MODIFY SIGNAL AND LIGHTING (N/B ON AND OFF RAMPS) (LOCATION 2)

APPROVED FOR ELECTRICAL WORK ONLY

E-5

REVISED BY | DATE REVISED
OANH D. NGUYEN | HABIB GOLBAN
CALCULATED-DESIGNED BY | CHECKED BY
FUNCTIONAL SUPERVISOR | NELSON LEE
STATE OF CALIFORNIA - DEPARTMENT OF TRANSPORTATION
Caltrans

LAST REVISION 01-12-12 | DATE PLOTTED => 08-MAR-2012 | TIME PLOTTED => 14:02

Dist	COUNTY	ROUTE	POST MILES TOTAL PROJECT	SHEET No.	TOTAL SHEETS
03	Yol	113	R0.3/R10.3	19	44

H. Golban 1-24-12
REGISTERED ELECTRICAL ENGINEER DATE

1-30-12
PLANS APPROVAL DATE

REGISTERED PROFESSIONAL ENGINEER HABIB GOLBAN No. E-17928 Exp. 9-30-12 ELECTRICAL STATE OF CALIFORNIA

THE STATE OF CALIFORNIA OR ITS OFFICERS OR AGENTS SHALL NOT BE RESPONSIBLE FOR THE ACCURACY OR COMPLETENESS OF SCANNED COPIES OF THIS PLAN SHEET.

NOTE:

FOR ACCURATE RIGHT OF WAY DATA, CONTACT RIGHT OF WAY ENGINEERING AT THE DISTRICT OFFICE.

PROJECT NOTES (THIS SHEET ONLY):

1 RC ppb, INSTALL NEW PPB

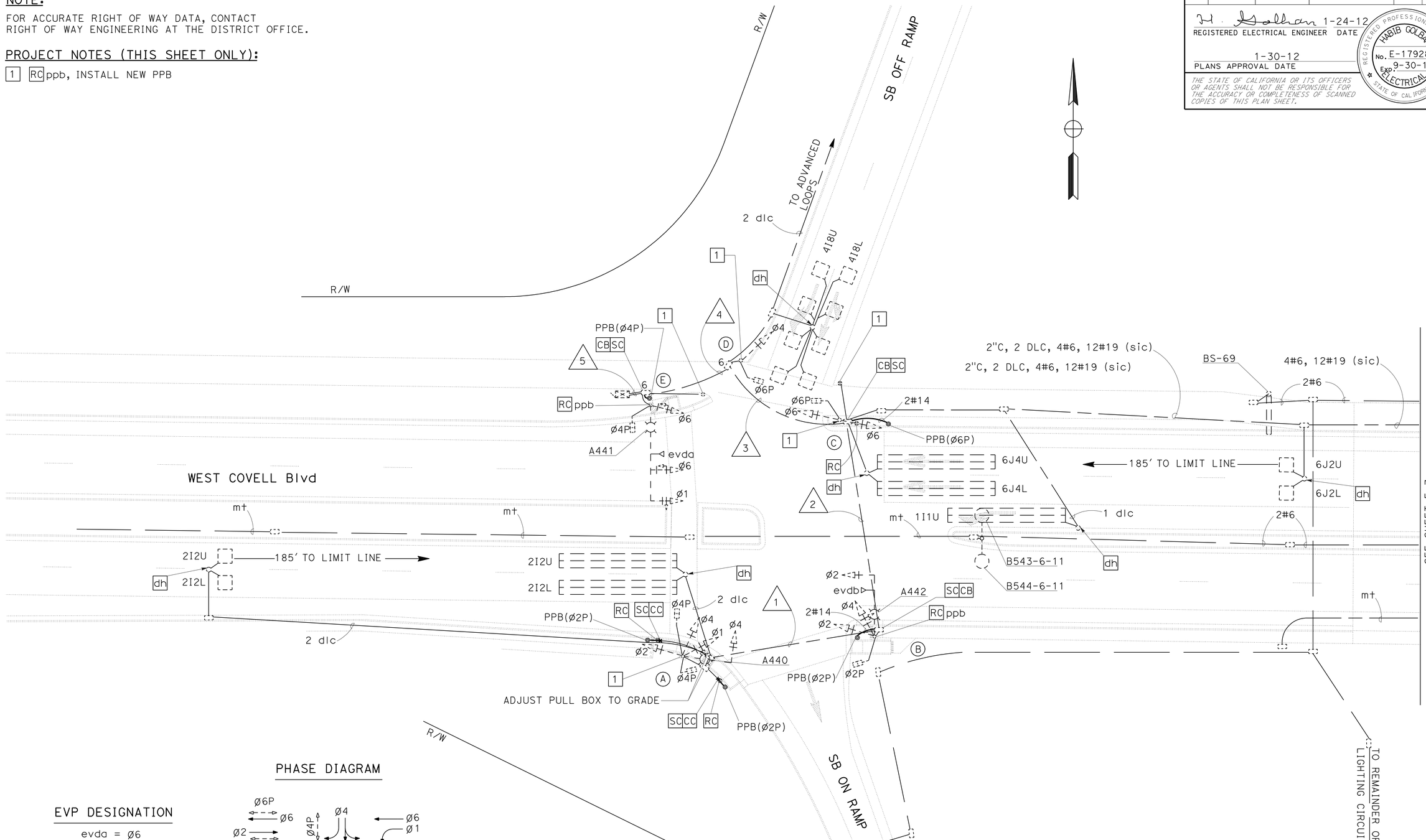

EVP DESIGNATION

evda = Ø6
evdb = Ø2

PHASE DIAGRAM

STEADY DEMAND SEQUENCE

MODIFY SIGNAL AND LIGHTING (S/B ON AND OFF RAMPS) (LOCATION 3)

SCALE: 1"=20'

E-6

APPROVED FOR ELECTRICAL WORK ONLY

STATE OF CALIFORNIA - DEPARTMENT OF TRANSPORTATION
Caltrans® ELECTRICAL DEIGN

FUNCTIONAL SUPERVISOR: NELSON LEE
CALCULATED-DESIGNED BY: JAMIE KOJAK
CHECKED BY: HABIB GOLBAN
REVISED BY
DATE REVISED

LAST REVISION 01-12-12
DATE PLOTTED => 08-MAR-2012
TIME PLOTTED => 14:02

BORDER LAST REVISED 7/2/2010
USERNAME => s113559
DGN FILE => 0300020728ua006.dgn
RELATIVE BORDER SCALE IS IN INCHES 0 1 2 3
UNIT 0000
PROJECT NUMBER & PHASE 03000207281

Dist	COUNTY	ROUTE	POST MILES TOTAL PROJECT	SHEET No.	TOTAL SHEETS
03	Yol	113	R0.3/R10.3	20	44

H. Golban 1-24-12
REGISTERED ELECTRICAL ENGINEER DATE

1-30-12
PLANS APPROVAL DATE

REGISTERED PROFESSIONAL ENGINEER HABIB GOLBAN No. E-17928 Exp. 9-30-12 ELECTRICAL STATE OF CALIFORNIA

THE STATE OF CALIFORNIA OR ITS OFFICERS OR AGENTS SHALL NOT BE RESPONSIBLE FOR THE ACCURACY OR COMPLETENESS OF SCANNED COPIES OF THIS PLAN SHEET.

EXISTING CONDUCTOR AND CONDUIT SCHEDULE

AWG OR CABLE	CONDUCTOR RUN	1	2	3	4	5
NO. 14	CONDUIT SIZE	3"	3"	3"	4"	2-3"
	VEHICLE					
	Ø1	3	3	3	3	3
	Ø 2	3	3	3	3	3
	Ø 3					
	Ø 4	3	3	3	3	6
	Ø 5					
	Ø 6			3	3	3
	Ø 7					
	Ø 8					
	PEDESTRIAN					
	Ø 2P	2	2	2	2	2
	Ø 4P	2	2	2	2	2
	Ø 6P			2	2	2
	Ø 8P					
	PED. PUSH BUT					
	Ø2 PPB	1	1	1	1	1
	Ø4 PPB	1	1	1	1	1
	Ø6 PPB			1	1	1
	Ø8 PPB					
	Ø2 BPB			1	1	2
	Ø6 BPB			1	1	2
	PPB COMMON	1	1	1	1	1
	PEU					
	SPARES	3	3	3	3	3
	TOTAL NO. 14	19	19	27	27	32
DLC	DETECTORS					
	1			1	1	1
	2	4	4	4	4	4
	3					
	4				4	4
	5					
	6			4	4	4
	7					
	8					
	TOTAL D.L.C.	4	4	9	13	13
EVC	Ø2		1	1	1	1
	Ø6					1
	TOTAL EVC		1	1	1	2
NO. 6	LUMINAIRE	2	2	2	2	
	SIGNAL COMMON	1	1	1	1	1
	CONTROLLER			2	2	2
	TOTAL NO. 6	3	3	5	5	3
SIC	SIC			1	1	1
	TOTAL SIC			1	1	1

POLE AND EQUIPMENT SCHEDULE

NO.	STANDARD			VEH SIG MTG		PED SIGNAL	PPB		HPS LUMINAIRE	SPECIAL REQUIREMENTS
	Type	Sig M.A.	Lum M.A.	Mast Arm	Pole	MTG	Ø	ARROW		
A	17-2-80	20′	15′	MAS	SV-2-TB	SP-2-T	4	←	200W	
B	17-2-80	25′	15′	MAS	SV-2-TB	SP-1-T	2	→	200W	
C	1-B				TV-2-T	SP-1-T	6	←		
D	1-B				TV-2-T	SP-1-T	6	→		
E	26-3-80	45′	15′	MAS	SV-1-T	SP-1-T	4	←	200W	

APPROVED FOR ELECTRICAL WORK ONLY

MODIFY SIGNAL AND LIGHTING (S/B ON AND OFF RAMPS) (LOCATION 3)

NO SCALE

E-7

STATE OF CALIFORNIA - DEPARTMENT OF TRANSPORTATION
Caltrans® ELECTRICAL DEIGN

FUNCTIONAL SUPERVISOR: NELSON LEE
CALCULATED-DESIGNED BY: JAMIE KOJAK
CHECKED BY: HABIB GOLBAN
REVISED BY
DATE REVISED

LAST REVISION 01-12-12
DATE PLOTTED => 08-MAR-2012
TIME PLOTTED => 14:02

Dist	COUNTY	ROUTE	POST MILES TOTAL PROJECT	SHEET No.	TOTAL SHEETS
03	Yol	113	R0.3/R10.3	21	44

H. Golban 1-24-12
REGISTERED ELECTRICAL ENGINEER DATE

1-30-12
PLANS APPROVAL DATE

REGISTERED PROFESSIONAL ENGINEER HABIB GOLBAN No. E-17928 EXP. 9-30-12 ELECTRICAL STATE OF CALIFORNIA

THE STATE OF CALIFORNIA OR ITS OFFICERS OR AGENTS SHALL NOT BE RESPONSIBLE FOR THE ACCURACY OR COMPLETENESS OF SCANNED COPIES OF THIS PLAN SHEET.

NOTE:

FOR ACCURATE RIGHT OF WAY DATA, CONTACT RIGHT OF WAY ENGINEERING AT THE DISTRICT OFFICE.

PROJECT NOTES (THIS SHEET ONLY):

1 RC ppb, INSTALL NEW PPB

2 RC ppb, INSTALL NEW PPB ON OPPOSITE SIDE OF POLE (FACING SOUTH).

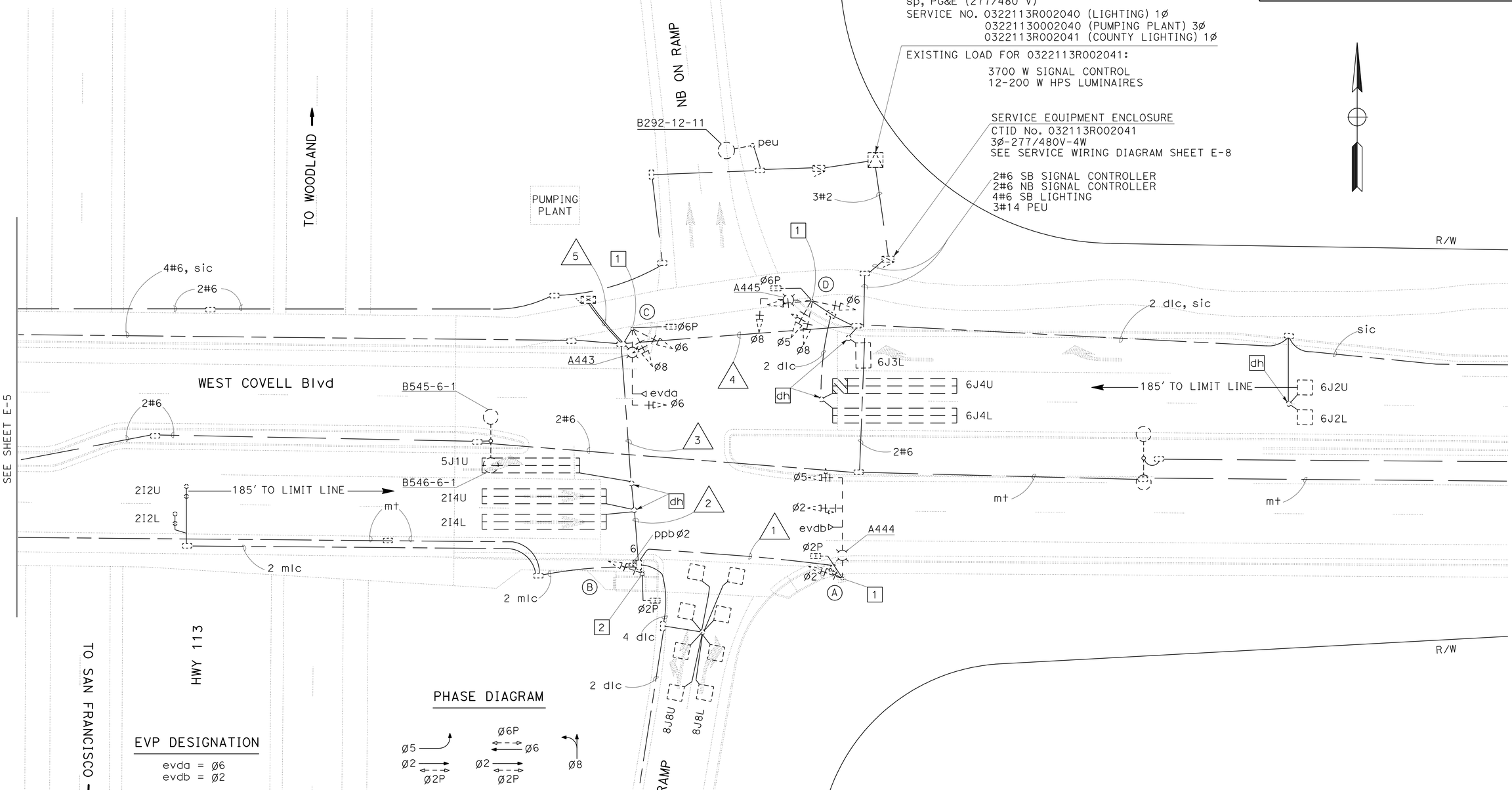

MODIFY SIGNAL AND LIGHTING (N/B ON AND OFF RAMPS) (LOCATION 3)

SCALE: 1"=20'

E-8

APPROVED FOR ELECTRICAL WORK ONLY

STATE OF CALIFORNIA - DEPARTMENT OF TRANSPORTATION
Caltrans® ELECTRICAL DESIGN

FUNCTIONAL SUPERVISOR: NELSON LEE
CALCULATED-DESIGNED BY: JAMIE KOJAK
CHECKED BY: HABIB GOLBAN
REVISED BY
DATE REVISED

LAST REVISION 01-12-12
DATE PLOTTED => 08-MAR-2012
TIME PLOTTED => 14:02

Dist	COUNTY	ROUTE	POST MILES TOTAL PROJECT	SHEET No.	TOTAL SHEETS
03	Yol	113	R0.3/R10.3	22	44

H. Golban 1-24-12
REGISTERED ELECTRICAL ENGINEER DATE

1-30-12
PLANS APPROVAL DATE

REGISTERED PROFESSIONAL ENGINEER HABIB GOLBAN No. E-17928 Exp. 9-30-12 ELECTRICAL STATE OF CALIFORNIA

THE STATE OF CALIFORNIA OR ITS OFFICERS OR AGENTS SHALL NOT BE RESPONSIBLE FOR THE ACCURACY OR COMPLETENESS OF SCANNED COPIES OF THIS PLAN SHEET.

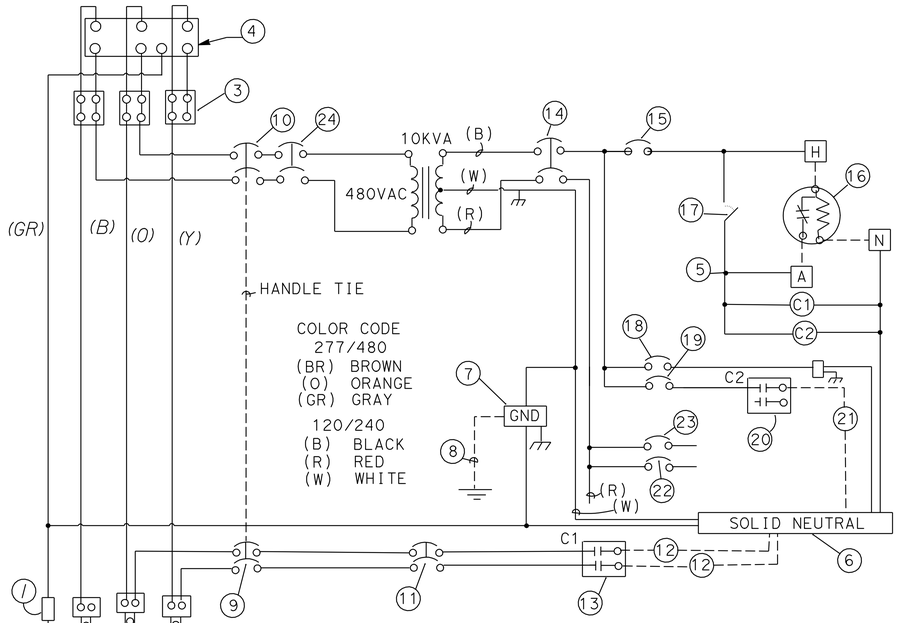

SERVICE WIRING DIAGRAM

CTID No. 032113R002041

277/480V-4W SERVICE WIRING LIST

ITEM NO.	COMPONENT	NAME PLATE DESCRIPTION
1	NEUTRAL LUG	
2	LANDING LUG	
3	TEST BYPASS FACILITIES	
4	METER SOCKET SERVICE	
5	TERMINAL BLOCKS	
6	SOLID NEUTRAL TERMINAL STRIP	
7	GROUND LUG	
8	GROUND ROD	
9	100A,480V,2P,CB	UNMETERED MAIN BREAKER
10	100A,480V,2P,CB	METERED MAIN BREAKER
11	40A,480V,2P,CB	HIGHWAY LIGHTING CIRCUIT #1
12	480V,HIGHWAY LIGHTING	
13	30A,2PNO CONTACTOR	
14	100A,240V,2P,CB	SIGNAL & CONTROLS BREAKER
15	15A,120V,1P,CB	HIGHWAY LIGHTING CONTROL
16	PHOTOELECTRIC UNIT	
17	15A,1P,TEST SWITCH	
18	20A,120V,1P,CB	RECEPTACLE
19	20A,120V,1P,CB	HIGHWAY LIGHTING CIRCUIT #2
20	30A,2PNO CONTACTOR	
21	120V,HIGHWAY LIGHTING	
22	60A,120V,1P,CB	NB SIGNAL
23	60A,120V,1P,CB	SB SIGNAL
24	30A,480V,2P,CB	

EXISTING CONDUCTOR AND CONDUIT SCHEDULE

AWG OR CABLE	CONDUCTOR RUN	1	2	3	4	5
NO. 14	CONDUIT SIZE	3"	3"	3"	3"	2-3"
	VEHICLE					
	Ø1					
	Ø 2	3	3	3		3
	Ø 3					
	Ø 4					
	Ø 5	3	3	3	3	6
	Ø 6				3	3
	Ø 7					
	Ø 8				3	3
	PEDESTRIAN					
	Ø 2P	2	2	2		2
	Ø 4P					
	Ø 6P				2	2
	Ø 8P					
	PED. PUSH BUT					
	Ø 2 PPB	1	1	1		1
	Ø 4 PPB					
	Ø 6 PPB				1	1
	Ø 8 PPB					
	Ø 2 BPB		1	1		1
	PPB COMMON	1	1	1	1	2
	SPARES	3	3	3	3	3
	TOTAL NO. 14	13	14	14	16	26
DLC	DETECTORS					
	Ø1					
	Ø 2			2		2
	Ø 3					
	Ø 4					
	Ø 5			1		1
	Ø 6				5	5
	Ø 7					
	Ø 8		4	4		4
	TOTAL D.L.C.		4	7	6	12
MLC	Ø2		2	2		2
EVC	Ø2	1	1	1		1
	Ø6					1
	TOTAL EVC	1	1	1		2
NO. 6	LUMINAIRE	2	2	2	2	
	SIGNAL COMMON	1	1	1	1	2
	TOTAL NO. 6	3	3	3	3	2
SIC	SIC				1	1
	TOTAL SIC				1	1

EXISTING POLE AND EQUIPMENT SCHEDULE

NO.	STANDARD			VEH SIG MTG		PED SIGNAL	PPB		HPS LUMINAIRE	SPECIAL REQUIREMENTS
	Type	Sig M.A.	Lum M.A.	Mast Arm	Pole	MTG	Ø	ARROW		
A	26-3-80	45′	15′	MAS	SV-1-T	SP-1-T	2	→	200W	
B	1-B				TV-1-T	SP-1-T	2	→		
C	19-2-80	30′	15′	MAS	SV-2-TB	SP-1-T	6	←	200W	
D	17-2-80	20′	12′	MAS	SV-2-TB	SP-1-T	6	→	200W	

MODIFY SIGNAL AND LIGHTING (N/B ON AND OFF RAMPS) (LOCATION 3)

NO SCALE

E-9

APPROVED FOR ELECTRICAL WORK ONLY

STATE OF CALIFORNIA - DEPARTMENT OF TRANSPORTATION
Caltrans® ELECTRICAL DEIGN

FUNCTIONAL SUPERVISOR: NELSON LEE
CALCULATED-DESIGNED BY: JAMIE KOJAK
CHECKED BY: HABIB GOLBAN
REVISED BY
DATE REVISED

LAST REVISION 01-12-12
DATE PLOTTED => 08-MAR-2012
TIME PLOTTED => 14:02

Dist	COUNTY	ROUTE	POST MILES TOTAL PROJECT	SHEET No.	TOTAL SHEETS
03	Yol	113	R0.3/R10.3	23	44

REGISTERED ELECTRICAL ENGINEER DATE 1-24-12

1-30-12
PLANS APPROVAL DATE

REGISTERED PROFESSIONAL ENGINEER HABIB GOLBAN No. E-17928 Exp. 9-30-12 ELECTRICAL STATE OF CALIFORNIA

THE STATE OF CALIFORNIA OR ITS OFFICERS OR AGENTS SHALL NOT BE RESPONSIBLE FOR THE ACCURACY OR COMPLETENESS OF SCANNED COPIES OF THIS PLAN SHEET.

NOTE:

FOR ACCURATE RIGHT OF WAY DATA, CONTACT RIGHT OF WAY ENGINEERING AT THE DISTRICT OFFICE.

PROJECT NOTES (THIS SHEET ONLY)

1. EXIST TYPE 332 CONTROLLER CABINET.
2. 2"C, 2#14
3. RC EXIST PPB
4. RC 1#14
5. RL PULL BOX BACK TO 6"

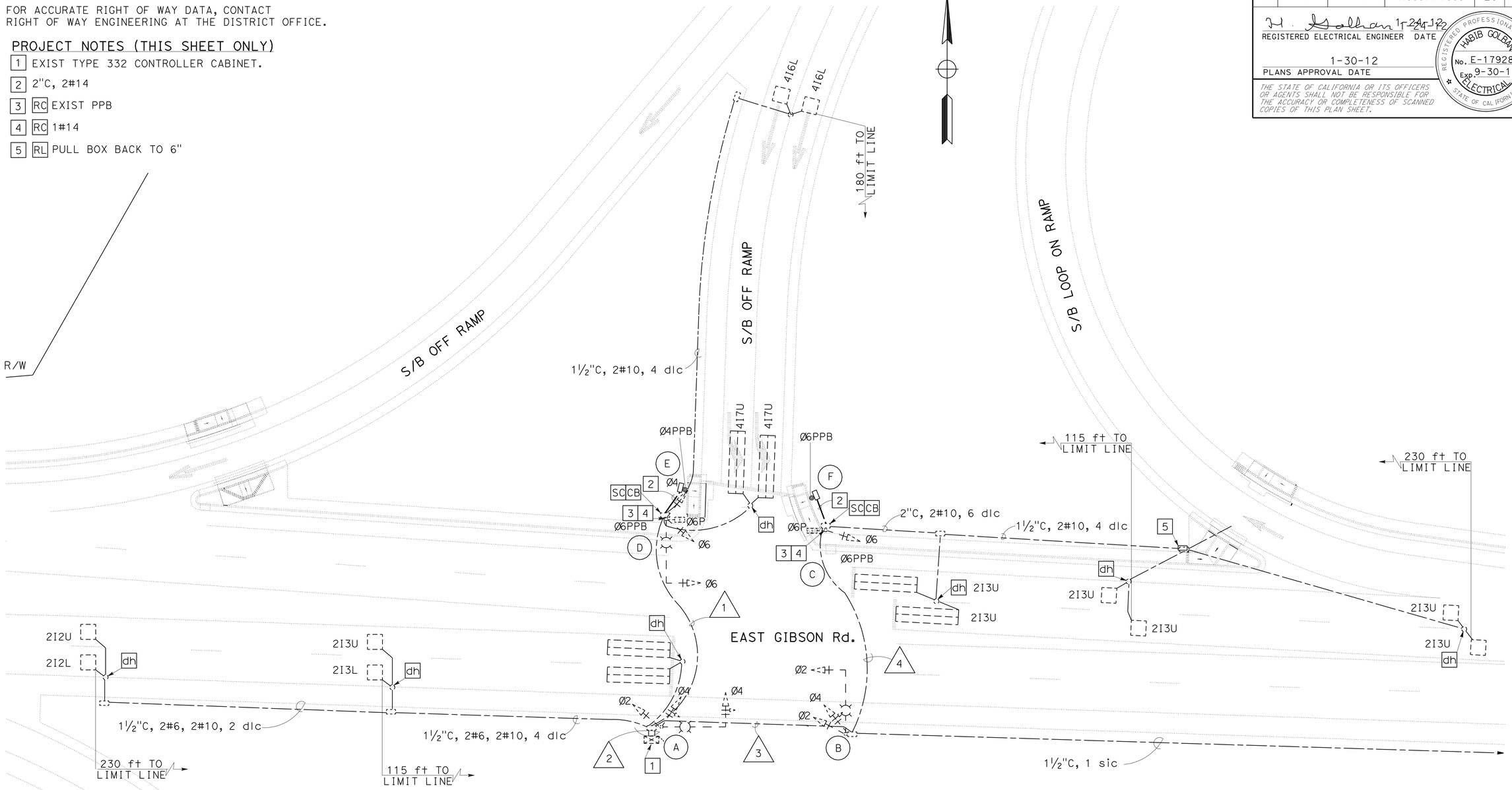

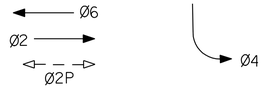

EXISTING PHASE DIAGRAM

MODIFY SIGNAL AND LIGHTING (S/B ON AND OFF RAMPS) (LOCATION 4)

SCALE: 1"=20'

APPROVED FOR ELECTRICAL WORK ONLY

E-10

REVISED BY	DATE REVISED
OANH D. NGUYEN	HABIB GOLBAN

CALCULATED-DESIGNED BY / CHECKED BY

FUNCTIONAL SUPERVISOR: NELSON LEE

STATE OF CALIFORNIA - DEPARTMENT OF TRANSPORTATION

Caltrans

LAST REVISION 01-12-12 | DATE PLOTTED => 08-MAR-2012 | TIME PLOTTED => 14:02

Dist	COUNTY	ROUTE	POST MILES TOTAL PROJECT	SHEET No.	TOTAL SHEETS
03	Yol	113	R0.3/R10.3	24	44

H. Golban 1-24-12
REGISTERED ELECTRICAL ENGINEER DATE

1-30-12
PLANS APPROVAL DATE

REGISTERED PROFESSIONAL ENGINEER HABIB GOLBAN No. E-17928 Exp. 9-30-12 ELECTRICAL STATE OF CALIFORNIA

THE STATE OF CALIFORNIA OR ITS OFFICERS OR AGENTS SHALL NOT BE RESPONSIBLE FOR THE ACCURACY OR COMPLETENESS OF SCANNED COPIES OF THIS PLAN SHEET.

EXISTING CONDUIT AND CONDUCTOR SCHEDULE

AWG OR CABLE	CONDUCTOR DESIGNATION	CONDUIT RUN NUMBER 1	2	3	4
#14	Ø2			3	
	Ø4	3	6	3	
	Ø6	3	6	3	3
	Ø6P	2	4	2	2
	Ø6PPB	1	2	1	1
	PBB COMMON	1	2	1	1
	SPARES	3	6	3	3
	TOTAL #14	13	26	16	10
#10	SIGNAL COMMON	1	2	1	1
	STREET LIGHTING	2		2	
	TOTAL #10	3	2	3	1
#6	SIGNAL SERVICE		2		
DLC	2I2U		1		
	2I2L		1		
	2I3U		1		
	2I3L	1	1		
	4I6U	1	1		
	4I6L	1	1		
	4I7U	1	1		
	6J2U		1	1	1
	6J2L		1	1	1
	6J3U		1	1	1
	6J3L		1	1	1
	643U		1	1	1
	643L		1	1	1
	TOTAL DLC	3	15	6	6
SIC	SIGNAL INTERCONNECT			1	
	CONDUIT SIZE	2	2-3½	2½	2½

MODIFIED POLE AND EQUIPMENT SCHEDULE

No.	STANDARDS TYPE	SMA (ft)	LMA (ft)	VEH SIG MTG Ø	MAST ARM	Ø	POLE	PEDESTRIAN SIGNAL Ø	MTG	PPB Ø	ARROW	HPS LUMINAIRE
Ⓐ	18-1-70	25			MAT		SV-2-TA					
Ⓑ	19-1-70	25	12		MAT		SV-1-TA					200 W
Ⓒ	1-B						TV-2-T	6		6		
Ⓓ	19-1-70	25	12		MAT		SV-2-TA	6		6		200 W
Ⓔ	PPB *									6	→	
Ⓕ	PPB *									6	←	

* NEW PEDESTRIAN PUSH BUTTON POST.

MODIFY SIGNAL AND LIGHTING (S/B ON AND OFF RAMPS) (LOCATION 4)

APPROVED FOR ELECTRICAL WORK ONLY

E-11

STATE OF CALIFORNIA - DEPARTMENT OF TRANSPORTATION
Caltrans® OFFICE OF ELECTRICAL DESIGN

FUNCTIONAL SUPERVISOR: NELSON LEE
CALCULATED-DESIGNED BY: OANH D. NGUYEN
CHECKED BY: HABIB GOLBAN
REVISED BY / DATE REVISED

LAST REVISION 01-12-12 | DATE PLOTTED => 08-MAR-2012 | TIME PLOTTED => 14:02

Dist	COUNTY	ROUTE	POST MILES TOTAL PROJECT	SHEET No.	TOTAL SHEETS
03	Yol	113	R0.3/R10.3	25	44

H. Golban 1-24-12
REGISTERED ELECTRICAL ENGINEER DATE

1-30-12
PLANS APPROVAL DATE

REGISTERED PROFESSIONAL ENGINEER HABIB GOLBAN No. E-17928 Exp. 9-30-12 ELECTRICAL STATE OF CALIFORNIA

THE STATE OF CALIFORNIA OR ITS OFFICERS OR AGENTS SHALL NOT BE RESPONSIBLE FOR THE ACCURACY OR COMPLETENESS OF SCANNED COPIES OF THIS PLAN SHEET.

NOTE:

FOR ACCURATE RIGHT OF WAY DATA, CONTACT RIGHT OF WAY ENGINEERING AT THE DISTRICT OFFICE.

PROJECT NOTES (THIS SHEET ONLY)

1. TYPE III-AF SERVICE EQUIPMENT ENCLOSURE CTID No. 03220160043250.
2. EXIST TYPE 332 CONTROLLER CABINET.
3. RL PULL BOX , 6"

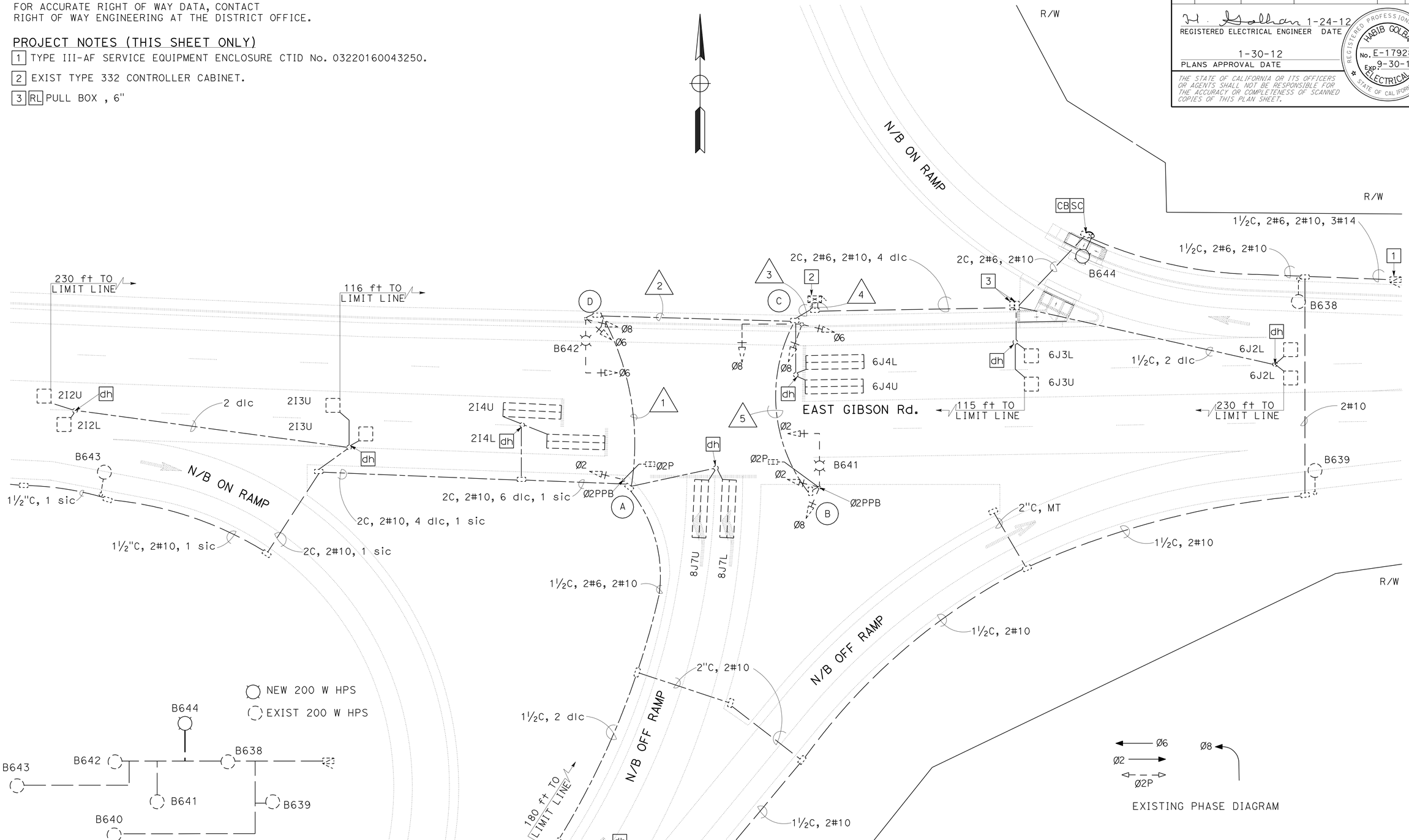

APPROVED FOR ELECTRICAL WORK ONLY

MODIFY SIGNAL AND LIGHTING (N/B ON AND OFF RAMP) (LOCATION 4)

SCALE: 1"=20'

E-12

STATE OF CALIFORNIA - DEPARTMENT OF TRANSPORTATION
Caltrans

FUNCTIONAL SUPERVISOR: NELSON LEE
CALCULATED-DESIGNED BY: OANH D. NGUYEN
CHECKED BY: HABIB GOLBAN
REVISED BY
DATE REVISED

LAST REVISION 01-12-12
DATE PLOTTED => 08-MAR-2012
TIME PLOTTED => 14:02

Dist	COUNTY	ROUTE	POST MILES TOTAL PROJECT	SHEET No.	TOTAL SHEETS
03	Yol	113	R0.3/R10.3	26	44

H. Golban 1-24-12
REGISTERED ELECTRICAL ENGINEER DATE

1-30-12
PLANS APPROVAL DATE

REGISTERED PROFESSIONAL ENGINEER HABIB GOLBAN No. E-17928 Exp. 9-30-12 ELECTRICAL STATE OF CALIFORNIA

THE STATE OF CALIFORNIA OR ITS OFFICERS OR AGENTS SHALL NOT BE RESPONSIBLE FOR THE ACCURACY OR COMPLETENESS OF SCANNED COPIES OF THIS PLAN SHEET.

EXISTING CONDUIT AND CONDUCTOR SCHEDULE

AWG OR CABLE	CONDUCTOR DESIGNATION	CONDUIT RUN NUMBER				
		1	2	3	4	5
#14	Ø2	3	3	6	6	3
	Ø6		3	3	3	
	Ø8		3	6	6	3
	Ø2P	2	2	4	4	2
	Ø2PPB	1	1	2	2	1
	PBB COMMON	1	1	2	2	1
	SPARES	3	3	6	6	3
	TOTAL #14	10	16	29	29	13
#10	SIGNAL COMMON	1	1	2	2	2
	STREET LIGHTING	2	2	2		2
	TOTAL #10	3	3	4	2	4
#6	SIGNAL SERVICE				2	
DLC	2I2U	1	1	1	1	
	2I2L	1	1	1	1	
	2I3U	1	1	1	1	
	2I3L	1	1	1	1	
	2I4U	1	1	1	1	
	2I4L	1	1	1	1	
	6J2U				1	
	6J2L				1	
	6J3U				1	
	6J3L				1	
	6J4U			1	1	
	6J4L			1	1	
	8J6U	1	1	1	1	
	8J6L	1	1	1	1	
	8J7U	1	1	1	1	
	TOTAL DLC	9	9	11	15	
SIC	SIGNAL INTERCONNECT	1	1	1	1	
	CONDUIT SIZE	2½"	3"	3"	2-3½"	1½"

EXISTING POLE AND EQUIPMENT SCHEDULE

No.	STANDARDS			VEH SIG MTG				PEDESTRIAN SIGNAL		PPB		HPS LUMINAIRE
	TYPE	SMA (ft)	LMA (ft)	Ø	MAST ARM	Ø	POLE	Ø	MTG	Ø	ARROW	
Ⓐ	1-B						TV-1-T		SP-1-T	2	→	
Ⓑ	19-1-70	25	12		MAT		SV-2-TA					200 W
Ⓒ	18-1-70	25			MAT		SV-2-TA					
Ⓓ	19-1-70	25	12		MAT		SV-2-TA		SP-1-T	2	←	200 W

MODIFY SIGNAL AND LIGHTING (N/B ON RAMP AT EAST GIBSON Rd.) (LOCATION 4)

APPROVED FOR ELECTRICAL WORK ONLY

E-13

STATE OF CALIFORNIA - DEPARTMENT OF TRANSPORTATION
Caltrans® OFFICE OF ELECTRICAL DESIGN

FUNCTIONAL SUPERVISOR: NELSON LEE
CALCULATED-DESIGNED BY: OANH D. NGUYEN
CHECKED BY: HABIB GOLBAN
REVISED BY
DATE REVISED

LAST REVISION 01-12-12
DATE PLOTTED => 08-MAR-2012
TIME PLOTTED => 14:02

Dist	COUNTY	ROUTE	POST MILES TOTAL PROJECT	SHEET No.	TOTAL SHEETS
03	Yol	113	R0.3/R10.3	27	44

H. Golban 1-24-12
REGISTERED ELECTRICAL ENGINEER DATE

1-30-12
PLANS APPROVAL DATE

REGISTERED PROFESSIONAL ENGINEER HABIB GOLBAN No. E-17928 Exp. 9-30-12 ELECTRICAL STATE OF CALIFORNIA

THE STATE OF CALIFORNIA OR ITS OFFICERS OR AGENTS SHALL NOT BE RESPONSIBLE FOR THE ACCURACY OR COMPLETENESS OF SCANNED COPIES OF THIS PLAN SHEET.

NOTE:

FOR ACCURATE RIGHT OF WAY DATA, CONTACT
RIGHT OF WAY ENGINEERING AT THE DISTRICT OFFICE.

PROJECT NOTES (THIS SHEET ONLY)

1. TYPE III-AF SERVICE EQUIPMENT ENCLOSURE CTID No. 03220160043250.
2. EXIST TYPE 332 CONTROLLER CABINET.
3. RC EXIST PPB, INSTALL PPB
4. RC EXIST 2 - PPB
5. RC 2#14
6. 2"C, 3#14

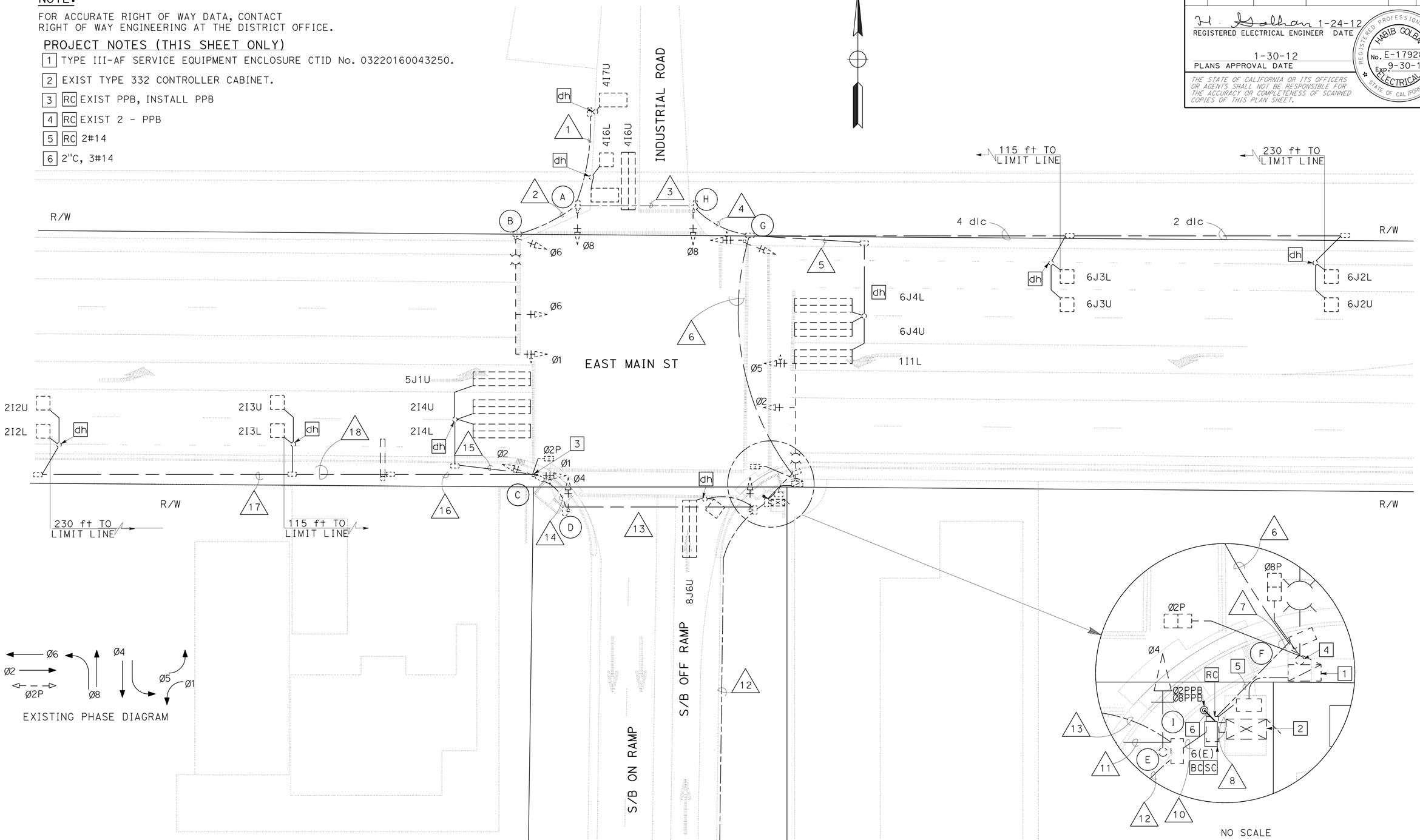

APPROVED FOR ELECTRICAL WORK ONLY

MODIFY SIGNAL AND LIGHTING (S/B ON AND OFF RAMPS) (LOCATION 5)

SCALE: 1"=20'

E-14

REVISED BY	DATE REVISED
OANH D. NGUYEN	HABIB GOLBAN
CALCULATED-DESIGNED BY	CHECKED BY
FUNCTIONAL SUPERVISOR	NELSON LEE

STATE OF CALIFORNIA - DEPARTMENT OF TRANSPORTATION
Caltrans

LAST REVISION 01-12-12 | DATE PLOTTED => 08-MAR-2012 | TIME PLOTTED => 14:03

Dist	COUNTY	ROUTE	POST MILES TOTAL PROJECT	SHEET No.	TOTAL SHEETS
03	Yol	113	R0.3/R10.3	28	44

H. Golban 1-24-12
REGISTERED ELECTRICAL ENGINEER DATE

1-30-12
PLANS APPROVAL DATE

REGISTERED PROFESSIONAL ENGINEER HABIB GOLBAN No. E-17928 Exp. 9-30-12 ELECTRICAL STATE OF CALIFORNIA

THE STATE OF CALIFORNIA OR ITS OFFICERS OR AGENTS SHALL NOT BE RESPONSIBLE FOR THE ACCURACY OR COMPLETENESS OF SCANNED COPIES OF THIS PLAN SHEET.

EXISTING CONDUIT AND CONDUCTOR SCHEDULE

AWG OR CABLE	CONDUCTOR DESIGNATION	CONDUIT RUN NUMBER AND SIZE																	
		1	2	3	4	5	6	7	8	9	10	11	12	13	14	15	16	17	18
#14	Ø1								3		3			3	3				
	Ø2							3	6		3			3	3				
	Ø4								3		3			3					
	Ø5						3	3	3										
	Ø6		3	3	3		3	3	3										
	Ø2P				3		3	3	4		2			2	2				
	Ø2PPB							2	1		1			1	1				
	PBB COMMON								1		1			1					
	PEU							3	3										
	Ø8PPB (FUTURE)						3	3	3										
	SPARES		3	3	3		3	3	6		3			3	3				
	RR PREEMPT				2		2	2	2										
	TOTAL #14		6	6	11		17	25	41		16			16	11				
#10	SIGNAL COMMON		1	1	1		1	1	2		1			1	1				
	STREET LIGHTING		2	2	2		2	2		2	2								
	SIGN LIGHTING									2	2				2		2		
	TOTAL #10		3	3	3		3	3	2		5			1	3		2		
#6	SIGNAL SERVICE								3	3									
DLC	1I1L					1	1	1	1										
	2I2U								1		1				1	1	1	1	1
	2I2L								1		1				1	1	1	1	1
	2I3U								1		1				1				
	2I3L								1		1				1				
	4I6U			1	1		1	1	1										
	4I6L			1	1		1	1	1										
	4I7U	1		1	1		1	1	1										
	5J1U							1	1		1				1	1			
	6I2U					1	1	1	1										
	6I2L					1	1	1	1										
	6I4U					1	1	1	1										
	6I4L					1	1	1	1										
	8J6U								1		1	1	1						
	8J6L								1		1	1							
	2I4U											1			1	1	1	1	1
	2I4L											1			1	1	1	1	1
	6J3U						1	1	1										
	6J3L							1	1										
	TOTAL DLC	1		3	3	5	10	11	17		7	4	1		7	5	4	4	4
SIC	SIGNAL INTERCONNECT							1	2		1			1	1				
	CONDUIT (INCH)	1	2	2	2	2	2	3	2-3	2	3	1½	1½	2	2	1½	1½	1	1½

MODIFIED POLE AND EQUIPMENT SCHEDULE

No.	STANDARDS			VEH SIG MTG				PEDESTRIAN SIGNAL		PPB		HPS LUMINAIRE
	TYPE	SMA (ft)	LMA (ft)	Ø	MAST ARM	Ø	POLE	Ø	MTG	Ø	ARROW	
A	1-B						TV-1-T					
B	26-2-70	40	12		MAT MAS		SV-1-T					200 W
C	1-B						TV-2-T					
D	1-B						TV-1-T					
E	1-B						TV-1-T					
F	26-2-70	40	12		MAT MAS		SV-1-T					200 W
G	1-B						TV-1-T					
H	1-B						TV-1-T					
I	PPB *									2 8	← →	

* NEW PEDESTRIAN PUSH BUTTON

MODIFY SIGNAL AND LIGHTING (S/B OFF RAMP AT EAST MAIN ST.) (LOCATION 5)

APPROVED FOR ELECTRICAL WORK ONLY

E-15

REVISED BY	DATE REVISED
OANH D. NGUYEN	HABIB GOLBAN
CALCULATED-DESIGNED BY	CHECKED BY
FUNCTIONAL SUPERVISOR	NELSON LEE

STATE OF CALIFORNIA - DEPARTMENT OF TRANSPORTATION
Caltrans OFFICE OF ELECTRICAL DESIGN

LAST REVISION 01-12-12 | DATE PLOTTED => 08-MAR-2012 | TIME PLOTTED => 14:03

Dist	COUNTY	ROUTE	POST MILES TOTAL PROJECT	SHEET No.	TOTAL SHEETS
03	Yol	113	R0.3/R10.3	29	44

H. Golban 1-24-12
REGISTERED ELECTRICAL ENGINEER DATE

1-30-12
PLANS APPROVAL DATE

REGISTERED PROFESSIONAL ENGINEER HABIB GOLBAN No. E-17928 Exp. 9-30-12 ELECTRICAL STATE OF CALIFORNIA

THE STATE OF CALIFORNIA OR ITS OFFICERS OR AGENTS SHALL NOT BE RESPONSIBLE FOR THE ACCURACY OR COMPLETENESS OF SCANNED COPIES OF THIS PLAN SHEET.

NOTE:

FOR ACCURATE RIGHT OF WAY DATA, CONTACT
RIGHT OF WAY ENGINEERING AT THE DISTRICT OFFICE.

PROJECT NOTES (THIS SHEET ONLY)

1. TYPE III-AF SERVICE EQUIPMENT ENCLOSURE CTID No. 03220160043250.
2. EXIST TYPE 332 CONTROLLER CABINET.
3. RC EXIST PPB, INSTALL PPB
4. 2"C, 2#14
5. RC 1#14

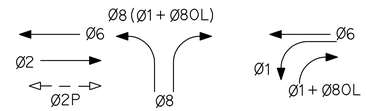

EXISTING PHASE DIAGRAM

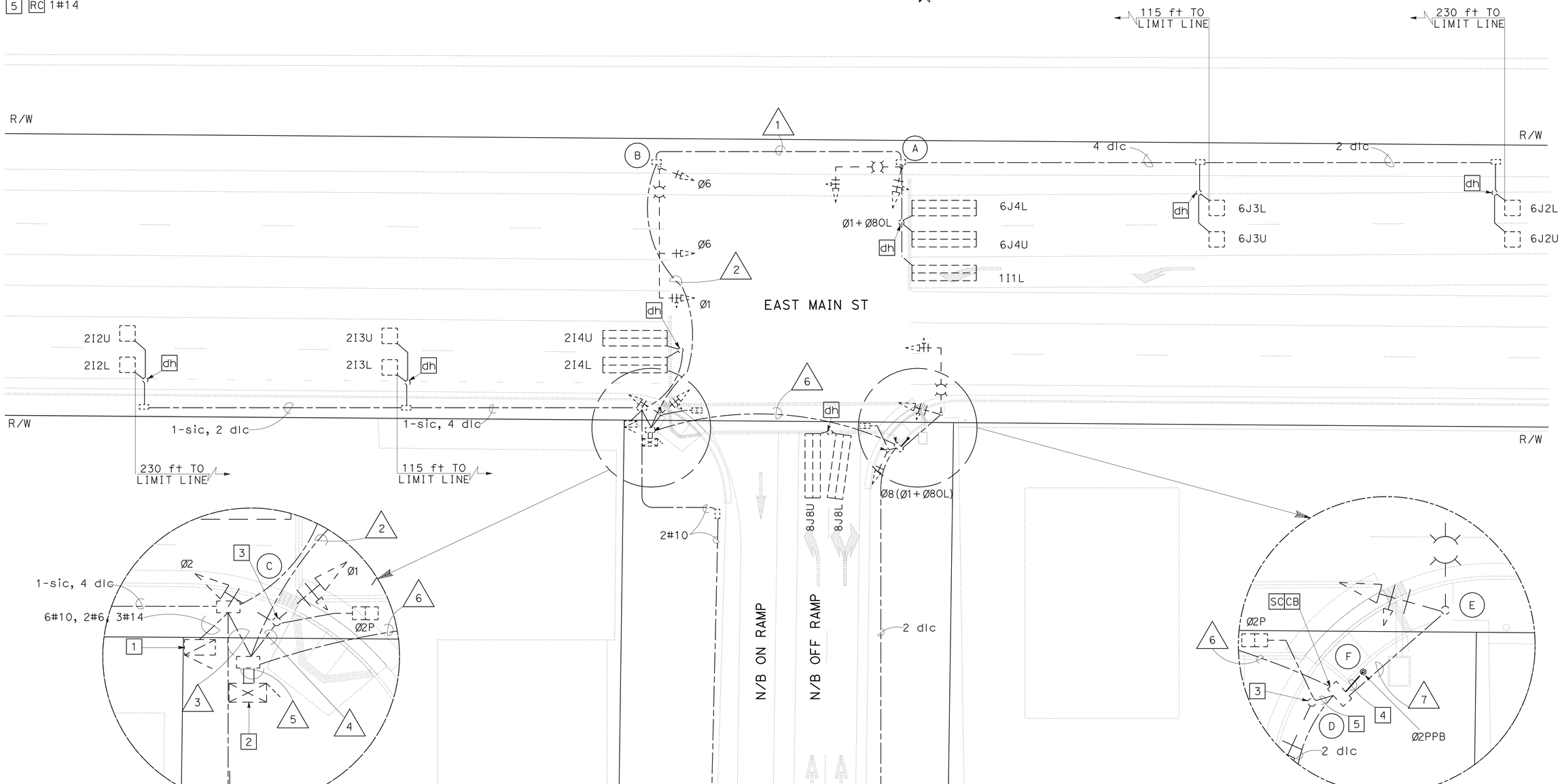

APPROVED FOR ELECTRICAL WORK ONLY

MODIFY SIGNAL AND LIGHTING (N/B ON AND OFF RAMPS) (LOCATION 5)

SCALE: 1"=20'

E-16

REVISED BY	DATE REVISED
OANH D. NGUYEN	HABIB GOLBAN

CALCULATED-DESIGNED BY
CHECKED BY

FUNCTIONAL SUPERVISOR: NELSON LEE

STATE OF CALIFORNIA - DEPARTMENT OF TRANSPORTATION
Caltrans

LAST REVISION 01-12-12 | DATE PLOTTED => 08-MAR-2012 | TIME PLOTTED => 14:03

Dist	COUNTY	ROUTE	POST MILES TOTAL PROJECT	SHEET No.	TOTAL SHEETS
03	Yol	113	R0.3/R10.3	30	44

H. Golban 1-24-12
REGISTERED ELECTRICAL ENGINEER DATE

1-30-12
PLANS APPROVAL DATE

REGISTERED PROFESSIONAL ENGINEER HABIB GOLBAN No. E-17928 Exp. 9-30-12 ELECTRICAL STATE OF CALIFORNIA

THE STATE OF CALIFORNIA OR ITS OFFICERS OR AGENTS SHALL NOT BE RESPONSIBLE FOR THE ACCURACY OR COMPLETENESS OF SCANNED COPIES OF THIS PLAN SHEET.

EXISTING CONDUIT AND CONDUCTOR SCHEDULE

AWG OR CABLE	CONDUCTOR DESIGNATION	CONDUIT RUN NUMBER						
		1	2	3	4	5	6	7
#14	Ø1		3		3	6		
	Ø2				3	6		3
	Ø6	3	3			3		
	Ø8	3	3			3		
	Ø1+Ø8 OL	2	2		2	4		
	Ø2P			2	2	4		
	Ø2PPB			1	1	2		
	PBB COMMON	1	1	1		2		
	PEU		3		2	3		
	Ø8P (FUTURE)	2	2			4		2
	SPARES	3	3			6		
	TOTAL #14	14	17	3	12	43	14	8
#10	SIGNAL COMMON	1	1	1	1	2	1	1
	STREET LIGHTING		2				2	2
	SIGN LIGHTING			2				
	TOTAL #10	1	3	3	1	2	3	3
#6	SIGNAL SERVICE			2		2		
DLC	1I1L	1	1			1		
	2I2U			1		1		
	2I2L			1		1		
	2I3U			1		1		
	2I3L			1		1		
	6J2U	1	1			1		
	6J2L	1	1			1		
	6J3U	1	1			1		
	6J3L	1	1			1		
	8J6U					1	1	
	8J6L					1	1	
	8J8U					1	1	
	8J8L					1	1	
	2I4U			1		1		
	2I4L			1		1		
	6J3U	1	1			1		
	6J3L	1	1			1		
	TOTAL DLC	7	7	6		17	4	
SIC	SIGNAL INTERCONNECT			3				
	CONDUIT SIZE	2½	3½	3½	3	2-3½	3	2

MODIFIED POLE AND EQUIPMENT SCHEDULE

No.	STANDARDS			VEH SIG MTG				PEDESTRIAN SIGNAL		PPB		HPS LUMINAIRE
	TYPE	SMA (ft)	LMA (ft)	Ø	MAST ARM	Ø	POLE	Ø	MTG	Ø	ARROW	
Ⓐ	18-2-70	25			MAT		SV-1-T					
Ⓑ	24-3-70	35	12		MAT MAS		SV-1-T					200 W
Ⓒ	1-B						TV-2-T	2	SP-1-T	2	→	
Ⓓ	1-B						TV-1-T	2	SP-1-T			
Ⓔ	19-3-70				MAT		TV-1-T					200 W
Ⓕ	PPB *									2	←	

* NEW PEDESTRIAN PUSH BUTTON POST.

MODIFY SIGNAL AND LIGHTING
(N/B OFF RAMP AT EAST MAIN ST.)
(LOCATION 5)

APPROVED FOR ELECTRICAL WORK ONLY

E-17

STATE OF CALIFORNIA - DEPARTMENT OF TRANSPORTATION
Caltrans® OFFICE OF ELECTRICAL DESIGN

FUNCTIONAL SUPERVISOR: NELSON LEE
CALCULATED-DESIGNED BY: OANH D. NGUYEN
CHECKED BY: HABIB GOLBAN
REVISED BY
DATE REVISED

LAST REVISION 01-12-12 | DATE PLOTTED => 08-MAR-2012 | TIME PLOTTED => 14:03

DIST	COUNTY	ROUTE	POST MILES TOTAL PROJECT	SHEET NO.	TOTAL SHEETS
03	Yol	113	R0.3/R10.3	31	44

REGISTERED CIVIL ENGINEER

November 17, 2006
PLANS APPROVAL DATE

REGISTERED PROFESSIONAL ENGINEER Michael Janzen No. 44788 Exp. 03-31-08 CIVIL STATE OF CALIFORNIA

The State of California or its officers or agents shall not be responsible for the accuracy or completeness of electronic copies of this plan sheet.

To accompany plans dated 1-30-12

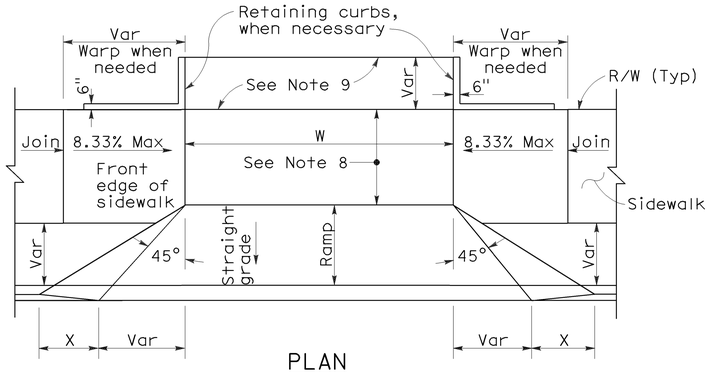

PLAN

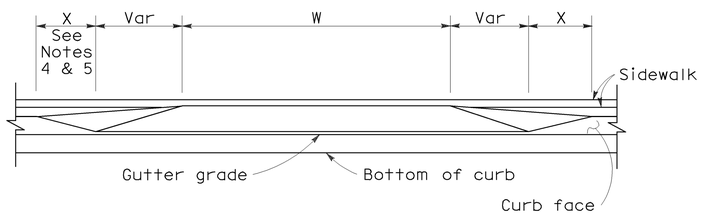

ELEVATION

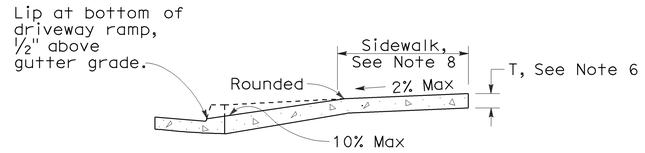

CASE A

Typical driveway, sidewalk not depressed

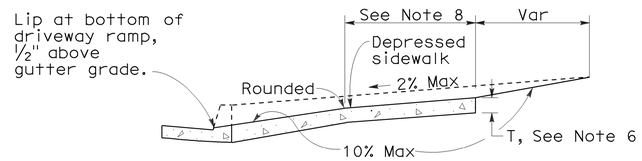

CASE B

Driveway with depressed sidewalk

SECTIONS

CURB QUANTITIES

TYPE	CUBIC YARDS PER LINEAR FOOT
A1-6	0.02585
A1-8	0.03084
A2-6	0.05903
A2-8	0.06379
A3-6	0.01036
A3-8	0.01435
B1-4	0.02185
B1-6	0.02930
B2-4	0.05515
B2-6	0.06171
B3-4	0.00641
B3-6	0.01074
B4	0.05709
D-4	0.04083
D-6	0.06804
E	0.06661

TABLE A

CURB TYPE	DIMENSIONS "H1"	"H2"	"W1"	"W2"
A1-6	1'-2"	6"	7½"	1½"
A1-8	1'-4"	8"	8"	2"
A2-6	1'-0"	6"	2'-7½"	1½"
A2-8	1'-2"	8"	2'-8"	2"
A3-6	6"	5"	7¼"	1¼"
A3-8	8"	7"	7¾"	1¾"
B1-4	1'-0"	4"	7½"	2½"
B1-6	1'-2"	6"	9"	4"
B2-4	10"	4"	2'-7½"	2½"
B2-6	1'-0"	6"	2'-9"	4"
B3-4	4"	3"	7"	2"
B3-6	6"	5"	8½"	3½"
D-4	10"	4"	1'-6"	1'-1"
D-6	1'-0"	6"	2'-2"	1'-8"

DRIVEWAYS

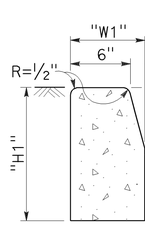

TYPE A1 CURBS

See Table A

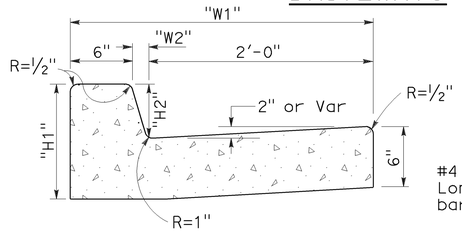

TYPE A2 CURBS

See Table A

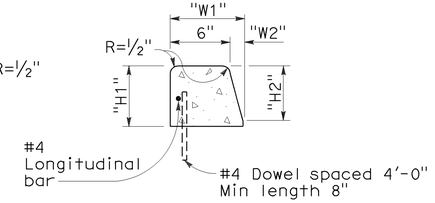

TYPE A3 CURBS

Superimposed on existing pavement
See Table A

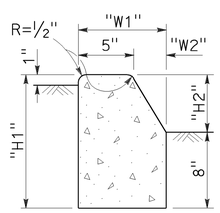

TYPE B1 CURBS

See Table A

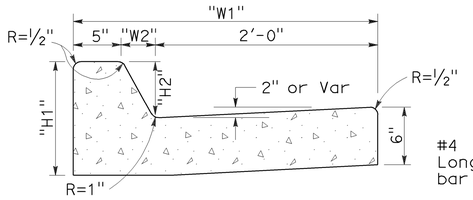

TYPE B2 CURBS

See Table A

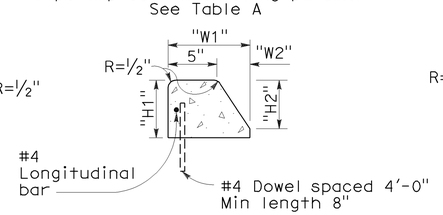

TYPE B3 CURBS

Superimposed on existing pavement
See Table A

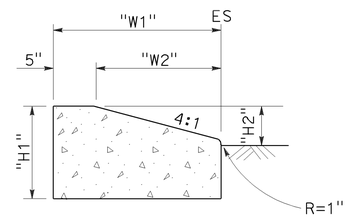

TYPE D CURBS

See Table A

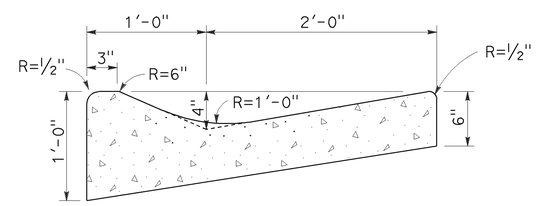

TYPE E CURB

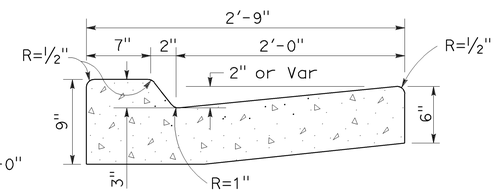

TYPE B4 CURBS

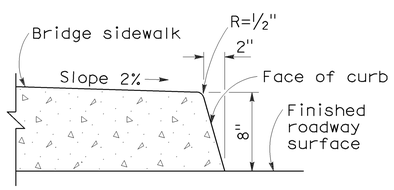

TYPE H CURB

On Bridges

CURBS

NOTES:

1. Case A driveway section typically applies.
2. Use Case B driveway section when ramp slopes would exceed 10% in Case A.
3. Use Case B driveway section when sidewalk cross slope would exceed 2% in Case A.
4. X=3'-0" except for curb heights over 10" where 4:1 slopes shall be used on curb slope.
5. X is a variable when sidewalk is located where wheelchairs may traverse the surface. Slopes shall not exceed 8.33%.
6. Sidewalk and ramp thickness "T" at driveway shall be 4" for residental and 6" for commercial.
7. Difference in slope of the driveway ramp and the slope of a line between the gutter and a point on the roadway 5'-0" from gutter line shall not exceed 15%. Reduce driveway ramp slope, not gutter slope, where required.
8. Minimum width of clear passageway for sidewalk shall be 4'-0".
9. Retaining curbs and acquisition of construction easement may be necessary for narrow sidewalks or curb heights in excess of 6".
10. Across the pedestrian route at curb ramp locations, the gutter pan slope shall not exceed 1" of depth for each 2'-0" of width.

STATE OF CALIFORNIA
DEPARTMENT OF TRANSPORTATION

CURBS AND DRIVEWAYS

NO SCALE

RSP A87A DATED NOVEMBER 17, 2006 SUPERSEDES STANDARD PLAN A87A DATED MAY 1, 2006 - PAGE 113 OF THE STANDARD PLANS BOOK DATED MAY 2006.

REVISED STANDARD PLAN RSP A87A

2006 REVISED STANDARD PLAN RSP A87A

10-25-06

DIST	COUNTY	ROUTE	POST MILES TOTAL PROJECT	SHEET NO.	TOTAL SHEETS
03	Yol	113	R0.3/R10.3	32	44

REGISTERED CIVIL ENGINEER

September 1, 2006
PLANS APPROVAL DATE

Hector David Cordova No. C41957 Exp. 3-31-08 CIVIL — REGISTERED PROFESSIONAL ENGINEER — STATE OF CALIFORNIA

The State of California or its officers or agents shall not be responsible for the accuracy or completeness of electronic copies of this plan sheet.

To accompany plans dated 1-30-12

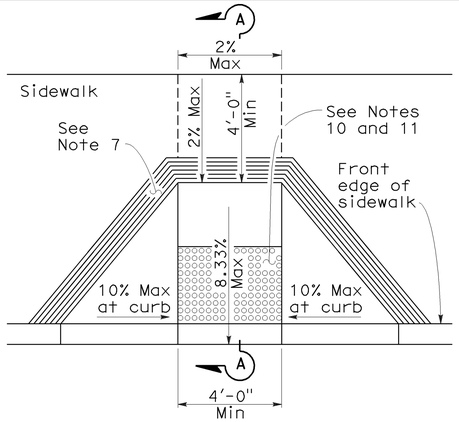

CASE A

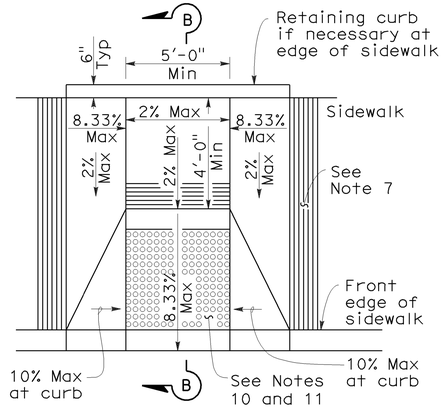

CASE B

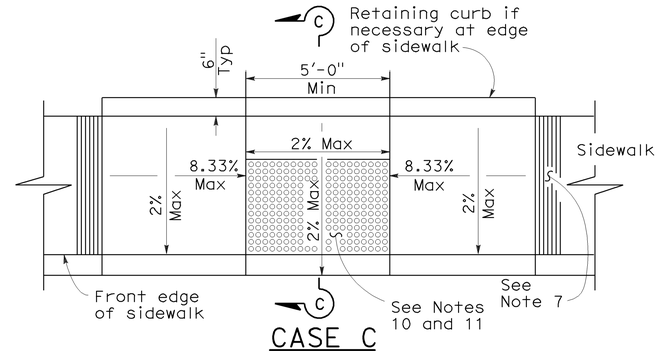

CASE C

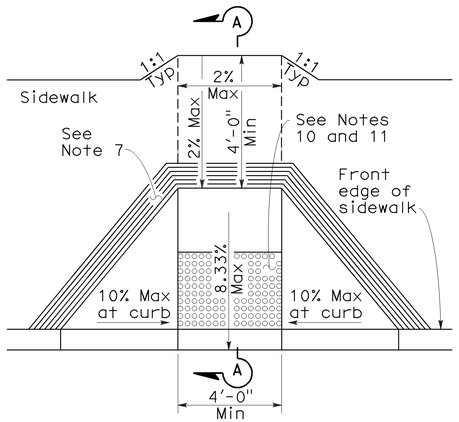

CASE D

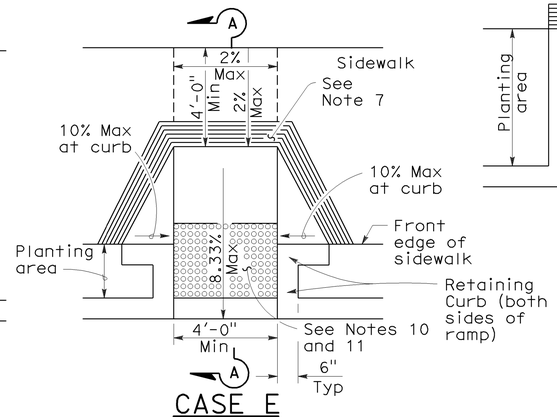

CASE E

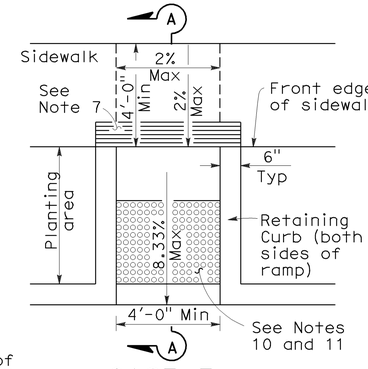

CASE F

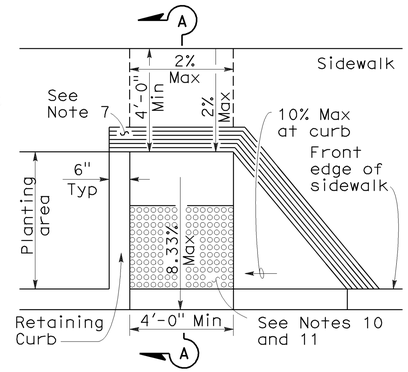

CASE G
See Note 4

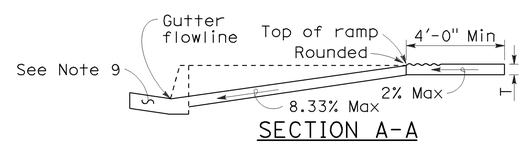

SECTION A-A

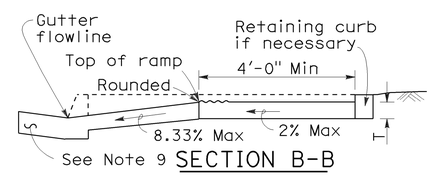

SECTION B-B
Depress entire sidewalk as required

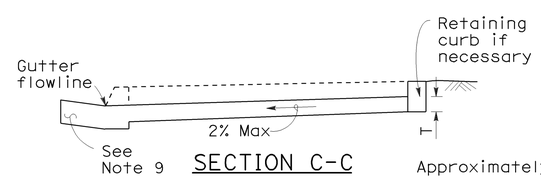

SECTION C-C

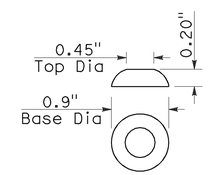

RAISED TRUNCATED DOME

NOTES:

1. As site conditions dictate, Case A through Case G curb ramps may be used for corner installations similar to those shown in Detail A and Detail B. The case of curb ramps used in Detail A do not have to be the same. Case A through Case G curb ramps also may be used at mid block locations, as site conditions dictate.
2. If distance from curb to back of sidewalk is too short to accommodate ramp and 4'-0" platform (landing) as shown in Case A, the sidewalk may be depressed longitudinally as in Case B, or C or may be widened as in Case D.
3. When ramp is located in center of curb return, crosswalk configuration must be similar to that shown for Detail B.
4. As site conditions dictate, the retaining curb side and the flared side of the Case G ramp shall be constructed in reversed position.
5. If located on a curve, the sides of the ramp need not be parallel, but the minimum width of the ramp shall be 4'-0".
6. Side slope of ramp flares vary uniformly from a maximum of 10% at curb to conform with longitudinal sidewalk slope adjacent to top of the ramp, except in Case C and Case F.
7. The curb ramp shall be outlined, as shown, with a 1'-0" wide border with 1/4" grooves approximately 3/4" on center. See grooving detail.
8. Transitions from ramps and landing to walks, gutters or streets shall be flush and free of abrupt changes.
9. Maximum slopes of adjoining gutters, the road surface immediately adjacent to the curb ramp or accessible route shall not exceed 5 percent within 4'-0" of the top and bottom of the curb ramp.
10. Curb ramps shall have a detectable warning surface that extends the full width and 3'-0" depth of the ramp. Detectable Warning Surfaces shall conform to the details on this plan and the requirements in the Special Provisions.
11. The edge of the detectable warning surface nearest the street shall be between 6" and 8" from the gutter flowline.
12. Sidewalk and ramp thickness, "T", shall be 3½" minimum.
13. Utility pull boxes, manholes, vaults and all other utility facilities within the boundaries of the curb ramp will be relocated or adjusted to grade by the owner prior to, or in conjunction with, curb ramp construction.
14. For retrofit conditions, removal and replacement of curb apron will be at the Contractor's option, unless otherwise shown on project plans.

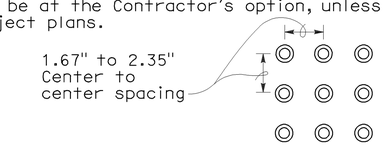

RAISED TRUNCATED DOME PATTERN (IN-LINE)

DETECTABLE WARNING SURFACE

See Note 10

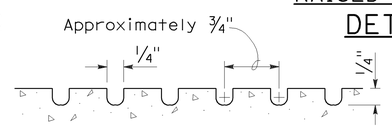

GROOVING DETAIL

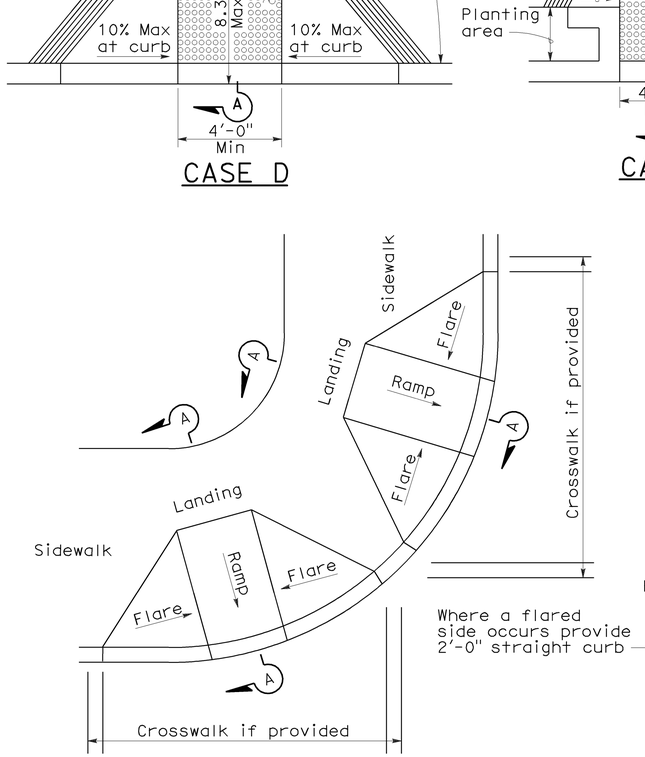

DETAIL A

TYPICAL TWO-RAMP CORNER INSTALLATION

See Note 1

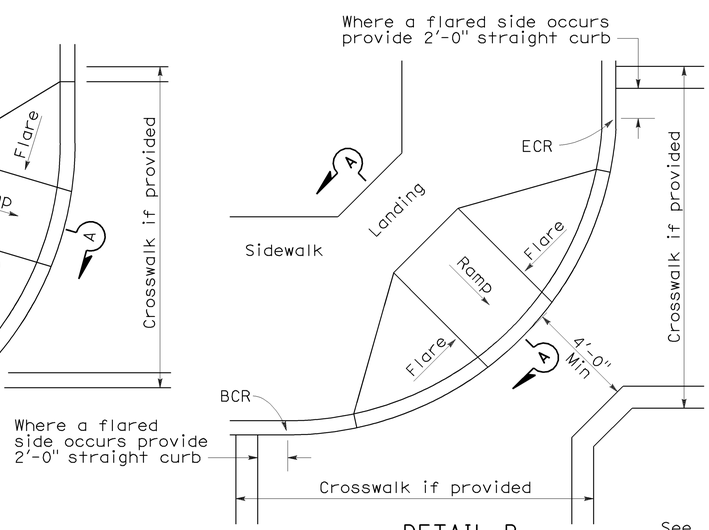

DETAIL B

TYPICAL ONE-RAMP CORNER INSTALLATION

See Notes 1 and 3

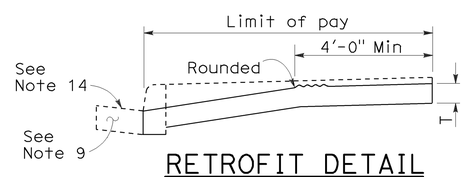

RETROFIT DETAIL

Existing curb and sidewalk

STATE OF CALIFORNIA
DEPARTMENT OF TRANSPORTATION

CURB RAMP DETAILS

NO SCALE

RSP A88A DATED SEPTEMBER 1, 2006 SUPERSEDES STANDARD PLAN A88A DATED MAY 1, 2006 - PAGE 115 OF THE STANDARD PLANS BOOK DATED MAY 2006.

REVISED STANDARD PLAN RSP A88A

2006 REVISED STANDARD PLAN RSP A88A

8-3-06

DIST	COUNTY	ROUTE	POST MILES TOTAL PROJECT	SHEET NO.	TOTAL SHEETS
03	Yol	113	R0.3/R10.3	33	44

Randell D. Hiatt
REGISTERED CIVIL ENGINEER

June 6, 2008
PLANS APPROVAL DATE

REGISTERED PROFESSIONAL ENGINEER
Randell D. Hiatt
No. C50200
Exp. 6-30-09
CIVIL
STATE OF CALIFORNIA

The State of California or its officers or agents shall not be responsible for the accuracy or completeness of electronic copies of this plan sheet.

To accompany plans dated 1-30-12

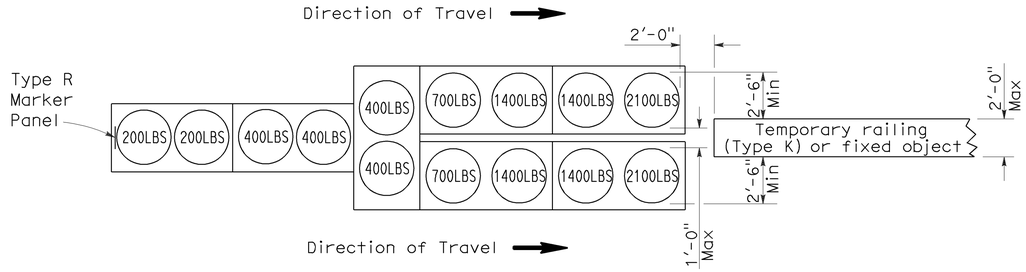

ARRAY 'TU14'

Approach speed 45 mph or more

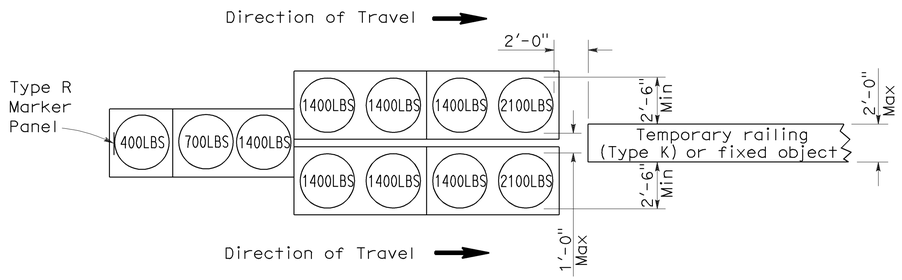

ARRAY 'TU11'

Approach speed less than 45 mph

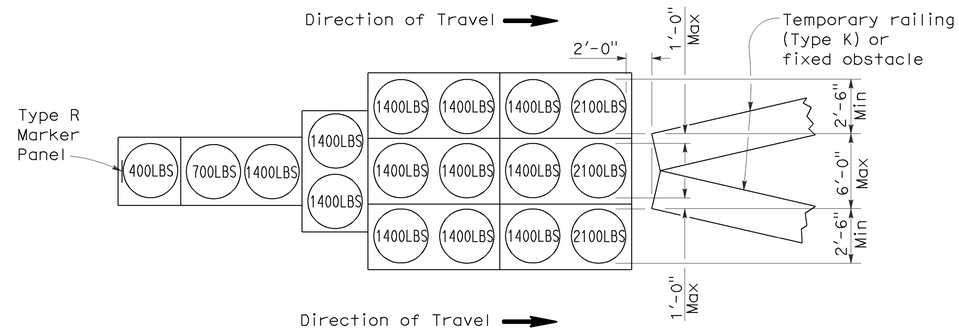

ARRAY 'TU17'

Approach speed less than 45 mph

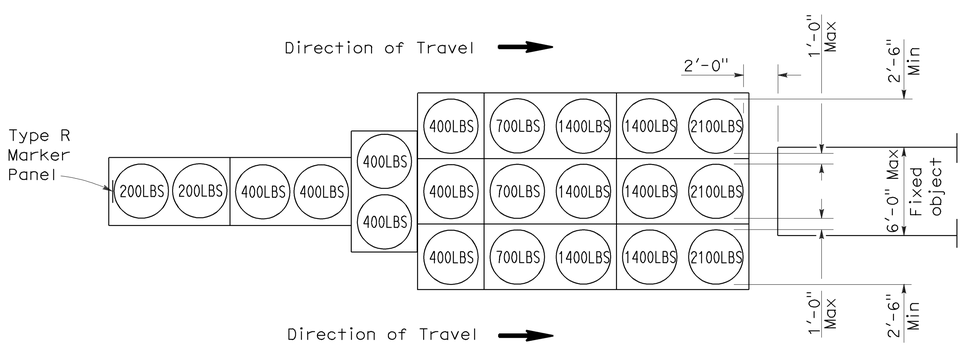

ARRAY 'TU21'

Approach speed 45 mph or more

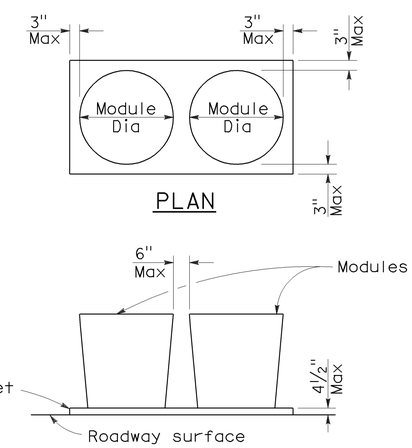

PLAN

ELEVATION

CRASH CUSHION PALLET DETAIL

See Note 7

NOTES:

1. (XXX) Indicates sand filled module location and weight of sand in pounds for each module. Module spacing is based on the greater diameter of the module.
2. All sand weights are nominal.
3. Temporary crash cushion arrays shall not encroach on the traveled way.
4. Place the top of Type R marker panel 1" below the module lid.
5. Refer to Standard Plan A73B for marker details.
6. Approach speeds indicated conform to NCHRP 350 Report criteria.
7. Use of pallets is optional.

STATE OF CALIFORNIA
DEPARTMENT OF TRANSPORTATION

TEMPORARY CRASH CUSHION, SAND FILLED (UNIDIRECTIONAL)

NO SCALE

RSP T1A DATED JUNE 6, 2008 SUPERSEDES STANDARD PLAN T1A
DATED MAY 1, 2006 - PAGE 211 OF THE STANDARD PLANS BOOK DATED MAY 2006.

REVISED STANDARD PLAN RSP T1A

2006 REVISED STANDARD PLAN RSP T1A

DIST	COUNTY	ROUTE	POST MILES TOTAL PROJECT	SHEET NO.	TOTAL SHEETS
03	Yol	113	R0.3/R10.3	34	44

Randell D. Hiatt
REGISTERED CIVIL ENGINEER

June 6, 2008
PLANS APPROVAL DATE

REGISTERED PROFESSIONAL ENGINEER
Randell D. Hiatt
No. C50200
Exp. 6-30-09
CIVIL
STATE OF CALIFORNIA

The State of California or its officers or agents shall not be responsible for the accuracy or completeness of electronic copies of this plan sheet.

To accompany plans dated 1-30-12

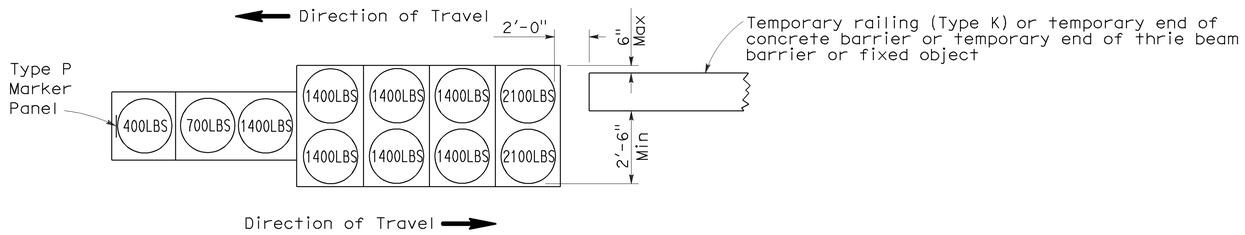

ARRAY 'TB11'

Approach speed less than 45 mph

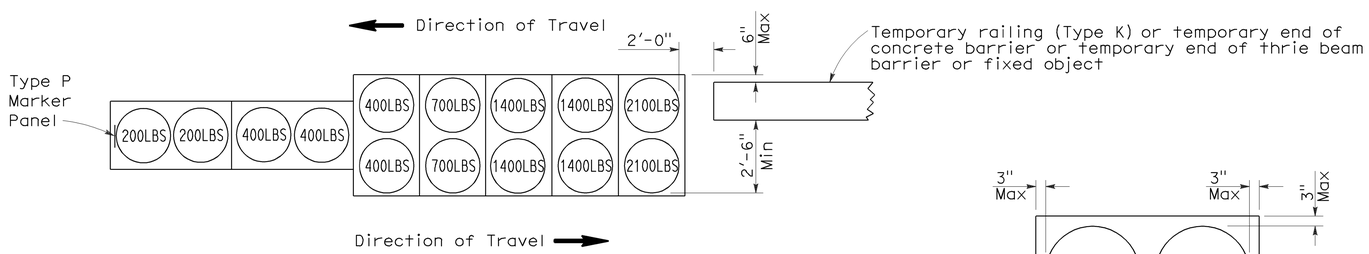

ARRAY 'TB14'

Approach speed 45 mph or more

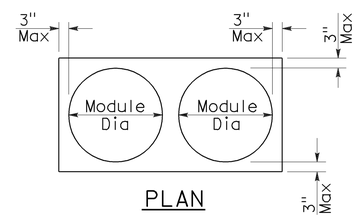

PLAN

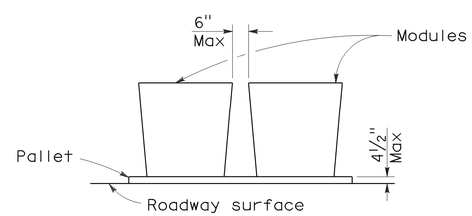

ELEVATION

CRASH CUSHION PALLET DETAIL

See Note 7

NOTES:

1. (XXX) Indicates sand filled module location and weight of sand in pounds for each module. Module spacing is based on the greater diameter of the module.
2. All sand weights are nominal.
3. Temporary crash cushion arrays shall not encroach on the traveled way.
4. Place the Type P marker panel so that the bottom of the panel rests upon the pallet.
5. Refer to Standard Plan A73B for marker details.
6. Approach speeds indicated conform to NCHRP 350 Report criteria.
7. Use of pallets is optional.

STATE OF CALIFORNIA
DEPARTMENT OF TRANSPORTATION

TEMPORARY CRASH CUSHION, SAND FILLED (BIDIRECTIONAL)

NO SCALE

RSP T1B DATED JUNE 6, 2008 SUPERSEDES STANDARD PLAN T1B
DATED MAY 1, 2006 - PAGE 212 OF THE STANDARD PLANS BOOK DATED MAY 2006.

REVISED STANDARD PLAN RSP T1B

2006 REVISED STANDARD PLAN RSP T1B

5-15-08

DIST	COUNTY	ROUTE	POST MILES TOTAL PROJECT	SHEET NO.	TOTAL SHEETS
03	Yol	113	R0.3/R10.3	35	44

Randell D. Hiatt
REGISTERED CIVIL ENGINEER

June 6, 2008
PLANS APPROVAL DATE

REGISTERED PROFESSIONAL ENGINEER
Randell D. Hiatt
No. C50200
Exp. 6-30-09
CIVIL
STATE OF CALIFORNIA

The State of California or its officers or agents shall not be responsible for the accuracy or completeness of electronic copies of this plan sheet.

To accompany plans dated 1-30-12

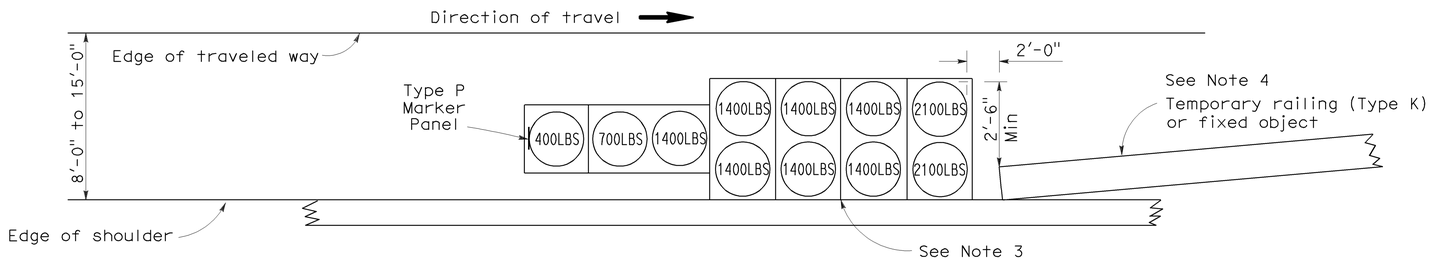

ARRAY 'TS11'

Approach speed less than 45 mph
See Note 9

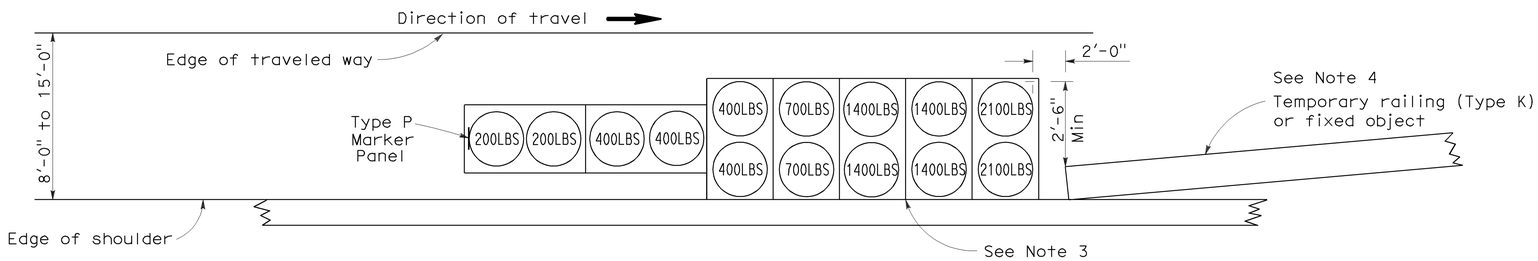

ARRAY 'TS14'

Approach speed 45 mph or more
See Note 9

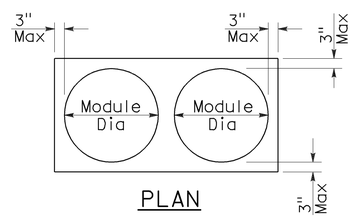

PLAN

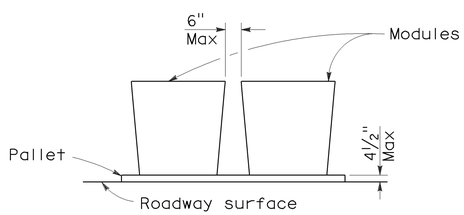

ELEVATION

CRASH CUSHION PALLET DETAIL

See Note 11

NOTES:

1. (XXX) Indicates sand filled module location and weight of sand in pounds for each module. Module spacing is based on the greater diameter of the module.
2. All sand weights are nominal.
3. The temporary crash cushion arrays shown on this plan shall be used only in locations where there will be traffic on one side of the temporary crash cushion array.
4. If the fixed object or approach end of the temporary railing is less than 15'-0" from the edge of traveled way, a temporary crash cushion is required in a construction or work zone.
5. Temporary crash cushion arrays shall not encroach on the traveled way.
6. Arrays for median shoulders shall conform to details shown on this plan for outside shoulders.
7. Place the Type P marker panel so that the bottom of the panel rests upon the pallet and faces traffic.
8. Refer to Standard Plan A73B for marker details.
9. For shoulder widths less than 8'-0", appropriate approved crash cushion protection, other than sand filled modules, shall be provided at fixed objects and at approach ends of temporary railing. The specific type of crash cushion shall be as shown on the project plans or as specified in the Special Provisions, or if not shown on the project plans or specified in the Special Provisions, shall be as approved by the Engineer.
10. Approach speeds indicated conform to NCHRP 350 Report criteria.
11. Use of pallets is optional.

STATE OF CALIFORNIA
DEPARTMENT OF TRANSPORTATION

TEMPORARY CRASH CUSHION, SAND FILLED (SHOULDER INSTALLATIONS)

NO SCALE

RSP T2 DATED JUNE 6, 2008 SUPERSEDES STANDARD PLAN T2
DATED MAY 1, 2006 - PAGE 213 OF THE STANDARD PLANS BOOK DATED MAY 2006.

REVISED STANDARD PLAN RSP T2

2006 REVISED STANDARD PLAN RSP T2

5-15-08

Dist	COUNTY	ROUTE	POST MILES TOTAL PROJECT	SHEET No.	TOTAL SHEETS
03	Yol	113	R0.3/R10.3	36	44

Randell D. Hiatt
REGISTERED CIVIL ENGINEER

May 20, 2011
PLANS APPROVAL DATE

REGISTERED PROFESSIONAL ENGINEER
Randell D. Hiatt
No. C50200
Exp. 6-30-11
CIVIL
STATE OF CALIFORNIA

The State of California or its officers or agents shall not be responsible for the accuracy or completeness of electronic copies of this plan sheet.

To accompany plans dated 1-30-12

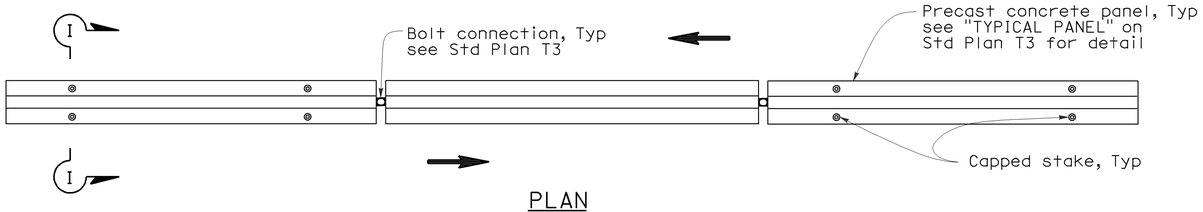

PLAN

RAILING STAKING CONFIGURATION FOR TWO-WAY TRAFFIC

See Note 1

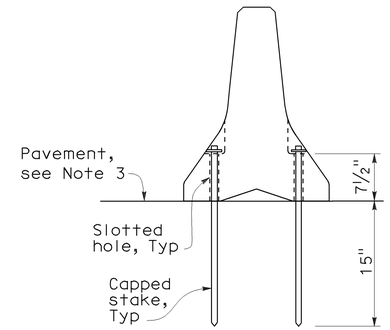

SECTION I-I

NOTES:

1. Where Type K Temporary Railing is placed as a temporary or long term barrier in two-way traffic on highways with less than 24" from the edge of traveled way, use four capped stakes per every other panel with end panels staked.
2. Where Type K Temporary Railing is placed 3" to 24" from the edge of an excavation on highways, use two capped stakes per panel along the traffic side.
3. Staked Type K Temporary Railing must be supported by at least 4" thick concrete, hot mix asphalt or existing asphalt concrete pavement.
4. The minimum yield strength for the washer must be 60,000 psi.
5. Direction of adjacent traffic indicated by ⟶.

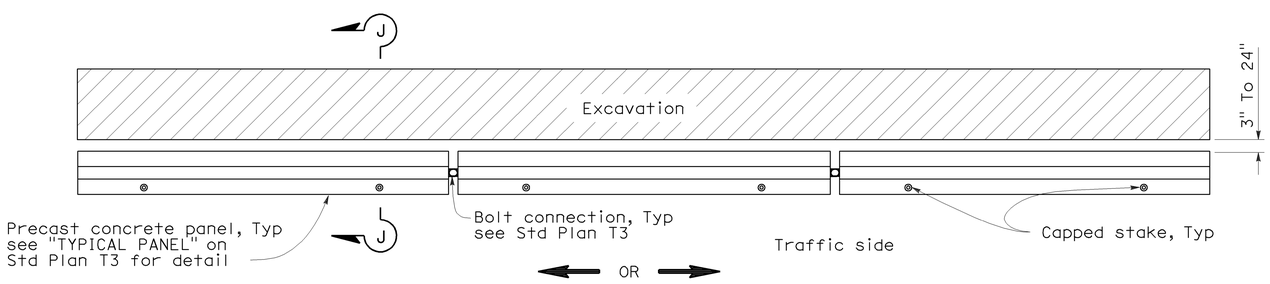

PLAN

RAILING STAKING CONFIGURATION ADJACENT TO AN EXCAVATION

See Note 2

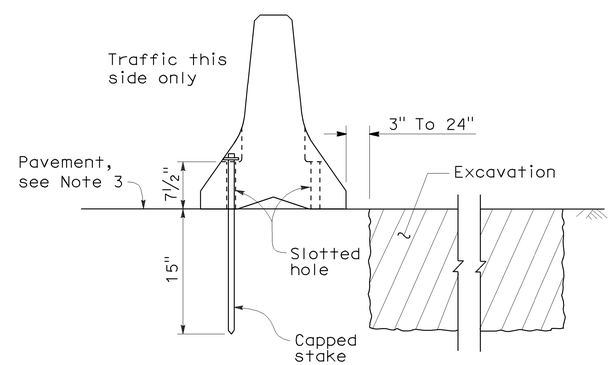

SECTION J-J

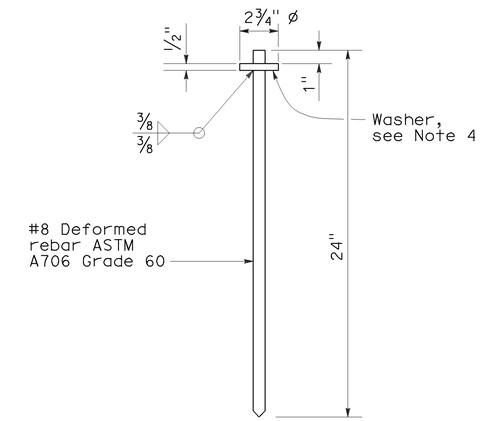

CAPPED STAKE DETAIL

STATE OF CALIFORNIA
DEPARTMENT OF TRANSPORTATION

TEMPORARY RAILING (TYPE K)

NO SCALE

NSP T3A DATED MAY 20, 2011 SUPPLEMENTS
THE STANDARD PLANS BOOK DATED MAY 2006.

NEW STANDARD PLAN NSP T3A

2006 NEW STANDARD PLAN NSP T3A

DIST	COUNTY	ROUTE	POST MILES TOTAL PROJECT	SHEET NO.	TOTAL SHEETS
03	Yol	113	R0.3/R10.3	37	44

REGISTERED ELECTRICAL ENGINEER

October 5, 2007
PLANS APPROVAL DATE

REGISTERED PROFESSIONAL ENGINEER
Jeffery G. McRae
No. E14512
Exp. 6-30-08
ELECTRICAL
STATE OF CALIFORNIA

The State of California or its officers or agents shall not be responsible for the accuracy or completeness of electronic copies of this plan sheet.

To accompany plans dated 1-30-12

2006 REVISED STANDARD PLAN RSP ES-1A

ELECTROLIERS

STANDARD TYPES
15, 15D
15 STRUCTURE
21, 21D STRUCTURE
30
31
32
35
36-20A

High mast light pole

Double Arm lighting standard

Existing electrolier

Electrolier foundation (Future installation)

NOTES:

1. Luminaires shall be 310 W HPS when installed on Type 21, 21D, 30, 31, 32, 35 and 36-20A Standards, unless otherwise specified. Luminaires shall be 200 W HPS when installed on other type standards or poles, unless otherwise specified.
2. Luminaires shall be the cutoff type, ANSI Type Ⅲ medium cutoff lighting distribution, unless otherwise specified.
3. Variations noted adjacent to symbol on project plans.

Electrolier (see project notes or project plans)

Luminaire on wood pole

STANDARD NOTES:

- AB — Abandon. If applied to conduit, remove conductors.
- BC — Install pull box in existing conduit run.
- BP — Pedestrian barricade, type as indicated on plan.
- CB — Install conduit into existing pull box.
- CC — Connect new and existing conduit. Remove existing conductors and install conductors as indicated.
- CF — Conduit to remain for future use. Remove conductors. Install pull wire or rope.
- DH — Detector handhole.
- FA — Foundation to be abandoned.
- IS — Install sign on signal mast arm.
- NS — No slip base on standard.
- PEC — Photoelectric control.
- PEU — Photoelectric unit.
- RC — Equipment or material to be removed and become the property of the Contractor.
- RE — Remove electrolier, fuses and ballast. Tape ends of conductors.
- RL — Relocate equipment.
- RR — Remove and reuse equipment.
- RS — Remove and salvage equipment.
- SC — Splice new to existing conductors.
- SD — Service disconnect.
- SF — Standard to remain for future use. Remove luminaire, pole conductors, fuses and ballast.
- TSP — Telephone service point.

ABBREVIATIONS AND EQUIPMENT DESIGNATIONS

PROPOSED	EXISTING	
BBS	bbs	Battery backup system
BC	bc	Bolt circle
C	C	Conduit
CCTV	cctv	Closed circuit television
CKT	ckt	Circuit
CMS	cms	Changeable message sign
DLC	dlc	Loop detector lead-in cable
EMS	ems	Extinguishable message sign
EVC	evc	Emergency vehicle cable
EVD	evd	Emergency vehicle detector
FB	fb	Flashing beacon
FBCA	fbca	Flashing beacon control assembly
FBS	fbs	Flashing beacon with slip base
FO	fo	Fiber optic
G	G	Ground (Equipment Grounding Conductor)
GFCI	GFCI	Ground fault circuit interrupt
HAR	har	Highway advisory radio
HEX	hex	Hexagonal
HPS	hps	High pressure sodium
IISNS	iisns	Internally illuminated street name sign
ISL	isl	Induction sign lighting
LED	led	Light emitting diode
LMA	lma	Luminaire mast arm
LPS	lps	Low pressure sodium
LTG	ltg	Lighting
LUM	lum	Luminaire
MAT	mat	Mast arm mounting vehicle signal faces, top attachment
MAS	mas	Mast arm mounting vehicle signal faces, side attachment
MAS-4A	mas-4A	Mast arm mounting vehicle signal faces, side attachment - 4 signal section
MAS-4B	mas-4B	
MAS-4C	mas-4C	
MAS-5A	mas-5A	Mast arm mounting vehicle signal faces, side attachment - 5 signal section
MAS-5B	mas-5B	
MC	mc	Mercury contactor
M/M	m/m	Multiple to multiple transformer
MT	mt	Conduit with pull wire or rope only
MTG	mtg	Mounting
	mv	Mercury vapor lighting fixture
N	N	Neutral (Grounded Conductor)
NC	NC	Normally closed
NO	NO	Normally open
PB	pb	Pull box
PEC	pec	Photoelectric control (Type Ⅰ, Ⅱ, Ⅲ, Ⅳ or Ⅴ as shown)
PED	ped	Pedestrian
PEU	peu	Photoelectric unit
PPB	ppb	Pedestrian push button
RL		Relocated equipment
RM	rm	Ramp metering
SB	sb	Slip base
SIC	sic	Signal interconnect cable
SIG	sig	Signal
SMA	sma	Signal mast arm
SNS	sns	Street name sign
SP	sp	Service point
TDC	tdc	Telephone demarcation cabinet
TMS	tms	Traffic monitoring station
TOS	tos	Traffic Operations System
VEH	veh	Vehicle
XFMR	xfmr	Transformer
COMM	comm	Communication
RWIS	rwis	Roadway weather information system

SOFFIT AND WALL MOUNTED LUMINAIRES

Pendant, 70 W HPS unless otherwise specified.

Flush, 70 W HPS unless otherwise specified.

Wall surface, 70 W HPS unless otherwise specified.

Existing soffit or wall luminaire to remain unmodified.

Existing soffit or wall luminaire to be modified as specified.

NOTE:

Arrow indicates "street side" of luminaire.

STATE OF CALIFORNIA
DEPARTMENT OF TRANSPORTATION

ELECTRICAL SYSTEMS (SYMBOLS AND ABBREVIATIONS)

NO SCALE

RSP ES-1A DATED OCTOBER 5, 2007 SUPERSEDES STANDARD PLAN ES-1A DATED MAY 1, 2006 - PAGE 400 OF THE STANDARD PLANS BOOK DATED MAY 2006.

REVISED STANDARD PLAN RSP ES-1A

DIST	COUNTY	ROUTE	POST MILES TOTAL PROJECT	SHEET NO.	TOTAL SHEETS
03	Yol	113	R0.3/R10.3	38	44

REGISTERED ELECTRICAL ENGINEER

October 5, 2007
PLANS APPROVAL DATE

REGISTERED PROFESSIONAL ENGINEER
Jeffery G. McRae
No. E14512
Exp. 6-30-08
ELECTRICAL
STATE OF CALIFORNIA

The State of California or its officers or agents shall not be responsible for the accuracy or completeness of electronic copies of this plan sheet.

To accompany plans dated 1-30-12

CONDUIT

PROPOSED	EXISTING	
		Lighting Conduit, unless otherwise indicated or noted
		Traffic signal conduit
C	c	Communication conduit
T	t	Telephone conduit
F	f	Fire alarm conduit
FO	fo	Fiber optic conduit
		Conduit termination (RSP ES-9A C)
R	r	Conduit riser in/on structure or service pole

SERVICE EQUIPMENT

PROPOSED	EXISTING	
OH	oh	Overhead lines
U	U	Wood pole "U" indicates utility owned
		Pole guy with anchor
		Utility transformer - ground mounted
III		Service equipment enclosure type
		Service equipment enclosure door indicates front of enclosure
T	t	Telephone demarcation cabinet

POLE-MOUNTED SERVICE DESIGNATION

Type of installation

TYPE H SERVICE - 28'-10" ← Pole height above grade

ILLUMINATED OVERHEAD SIGN

PROPOSED	EXISTING	
		Overhead sign - Single post
		Overhead sign - Two post
		Overhead sign - Mounted on structure
		Overhead sign with electrolier

SIGNAL EQUIPMENT

PROPOSED	EXISTING	
		Pedestrian signal face
		Pedestrian push button post
		Pedestrian barricade
		Vehicle signal face (with backplate, 3-Section: red, yellow and green)
		Vehicle signal face with angle visors
PV	PV	Modifications of basic symbols: "L" indicates all non-arrow sections louvered "LG" indicates louvered green section only "PV" indicates 12" programmed visibility sections "8" indicates all 8" sections (only when specified)
		Type 15TS and Vehicle signal face
		Vehicle signal face with red, yellow and green left arrow sections
		Vehicle signal face with red and yellow sections and up green arrow
		Vehicle signal face (5 Section) with red, yellow and green sections and yellow and green right arrows
		Type 1 Standard and attached vehicle signal faces
		Standard with signal mast arm only and attached vehicle signal faces and internally illuminated street name sign
		Type 33 Standard, Left-turn vehicle signal face and sign
		Standard with luminaire and signal mast arms and attached vehicle signal faces
		Cantilever flashing beacon Type 9 Frame, with a sign unless otherwise specified or indicated
		Type 15-FBS Standard with two vehicle signal face sections with lens, backplate and visor with a sign
R	Y	Flashing beacon. One vehicle signal face section with lens, backplate and visor. "R" indicates red indication, "Y" indicates yellow indication
		Controller assembly. Door indicates front of cabinet

SIGNAL EQUIPMENT Cont

PROPOSED	EXISTING	
		Guard post
		Type 1 Standard with "Meter On" sign
		Emergency Vehicle detector

NOTES:

1. All signal sections shall be 12" unless shown otherwise.
2. Signal heads shall be provided with backplates unless shown otherwise.
3. Signal indication shall be LED.

STATE OF CALIFORNIA
DEPARTMENT OF TRANSPORTATION

ELECTRICAL SYSTEMS (SYMBOLS AND ABBREVIATIONS)

NO SCALE

RSP ES-1B DATED OCTOBER 5, 2007 SUPERCEDES STANDARD PLAN ES-1B DATED MAY 1, 2006 - PAGE 401 OF THE STANDARD PLANS BOOK DATED MAY 2006.

REVISED STANDARD PLAN RSP ES-1B

2006 REVISED STANDARD PLAN RSP ES-1B

7-10-07

DIST	COUNTY	ROUTE	POST MILES TOTAL PROJECT	SHEET NO.	TOTAL SHEETS
03	Yol	113	R0.3/R10.3	39	44

REGISTERED ELECTRICAL ENGINEER

October 5, 2007
PLANS APPROVAL DATE

REGISTERED PROFESSIONAL ENGINEER
Jeffery G. McRae
No. E14512
Exp. 6-30-08
ELECTRICAL
STATE OF CALIFORNIA

The State of California or its officers or agents shall not be responsible for the accuracy or completeness of electronic copies of this plan sheet.

To accompany plans dated 1-30-12

EQUIPMENT IDENTIFICATION

ILLUMINATED SIGN IDENTIFICATION NUMBER:

Sign No. 12345 — Sign number - Place on post or structure

10 ISL SCI 1.0

- 1.0 — Transformer rating (kVA)
- SCI — Lighting control type
- ISL — Number and type of fixtures

Do NOT place on standard or structure

ELECTROLIER OR EQUIPMENT IDENTIFICATION NUMBER:

12345 - 15'-0"

- 15'-0" — Mast arm length, if shown. Do not place on standard or structure.
- 12345 — Equipment number - Place on standard or structure. Existing equipment numbers are shown in parenthesis

CONDUIT AND CONDUCTOR IDENTIFICATION:

1½"C, 2#10, 15#14, 2 DLC

- 2#10, 15#14, 2 DLC — Number and size of conductors and cables
- 1½"C — Size of conduit in inches

Ø1, Ø2, Ø2P, etc.	Traffic phase identification for signal faces, detectors and phase diagrams
1 2 3	Project note numbers
A B C	Equipment description, installation or item numbers
1 2 3	Conduit run numbers

SIGNAL AND LIGHTING STANDARD (TYPICAL DESIGNATION):

19A - 3 - 100

- 100 — Wind velocity = 100 mph
- 3 — Case 3 arm loading
- 19A — Standard type
- Standard Plan sheet number
- Detail number or letter

MISCELLANEOUS EQUIPMENT

PROPOSED	EXISTING	
CMS	cms	Changeable message sign
		Closed circuit television camera
		Highway advisory radio pole and antenna
EMS	ems	Extinguishable message sign
M V	m v	Detection device M = Microwave sensor V = Video image sensor

WIRING DIAGRAM LEGEND

P	Pole
CB	Circuit breaker
A	Ampere
V	Volt
M	Metered
UM	Unmetered
NB	Neutral bus
GB	Ground bus
G	Equipment grounding conductor
N	Grounded conductor (Neutral)

- External conductor
- Conductor or bus
- Tie point
- Contactor coil
- Contactor, Contact NO
- Terminal blocks
- Contactor, Contact NC
- Enclosure bond
- Grounding electrode
- Circuit breaker
- Receptacle

PULL BOXES

PROPOSED	EXISTING	
		Pull box-No. 5 unless otherwise indicated or noted.
3	9A(21)	Pull box-Additional designations or descriptions

3 = No. 3½ pull box
5 = No. 5 pull box
6 = No. 6 pull box
7 = No. 7 (Ceiling pull box)
8 = No. 8 (Pendant soffit pull box)
9 = No. 9 pull box
9A = No. 9A pull box

(C) = Communications pull box
(E) = Pull box with extension
(S) = Sprinkler control pull box
(21) = Anchor bolts and conduit for future installation of Type 21 Standard
(T) = Traffic pull box

VEHICLE DETECTORS

5 J 9 U

- U = Upper
- L = Lower
- Slot number in input file
- Input file (I or J)
- Phase

PROPOSED	EXISTING	
		Type A detector loop. Outline of sawcut shown.
		Type B detector loop. Outline of sawcut shown.
		Type C detector loop. Outline of sawcut shown.
		Type D detector loop. Outline of sawcut shown.
		Type E detector loop. Outline of sawcut shown.
		Type Q detector loop. Outline of sawcut shown.
		Magnetic detector
DH	dh	Detector handhole
		Microwave or video detection zone

STATE OF CALIFORNIA
DEPARTMENT OF TRANSPORTATION

ELECTRICAL SYSTEMS (SYMBOLS AND ABBREVIATIONS)

NO SCALE

RSP ES-1C DATED OCTOBER 5, 2007 SUPERCEDES STANDARD PLAN ES-1C DATED MAY 1, 2006 - PAGE 402 OF THE STANDARD PLANS BOOK DATED MAY 2006.

REVISED STANDARD PLAN RSP ES-1C

2006 REVISED STANDARD PLAN RSP ES-1C

DIST	COUNTY	ROUTE	POST MILES TOTAL PROJECT	SHEET NO.	TOTAL SHEETS
03	Yol	113	R0.3/R10.3	40	44

REGISTERED ELECTRICAL ENGINEER

June 6, 2008
PLANS APPROVAL DATE

REGISTERED PROFESSIONAL ENGINEER Jeffery G. McRae No. E14512 Exp. 6-30-10 ELECTRICAL STATE OF CALIFORNIA

The State of California or its officers or agents shall not be responsible for the accuracy or completeness of electronic copies of this plan sheet.

To accompany plans dated 1-30-12

2006 REVISED STANDARD PLAN RSP ES-4C

VISORS

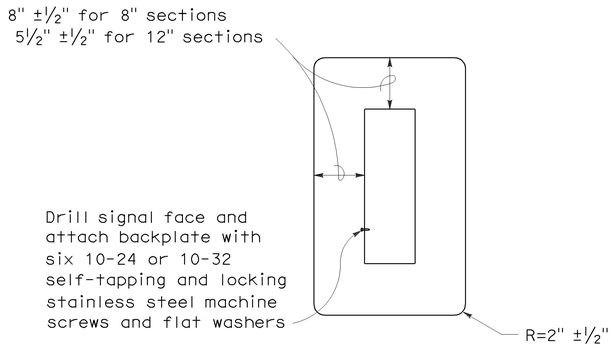

8" AND 12" SECTIONS

BACKPLATE

1/16" minimum thickness
3001-14 aluminum, or plastic when specified

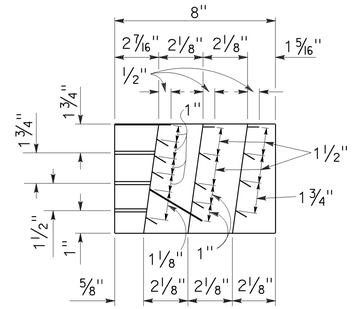

SECTION A-A

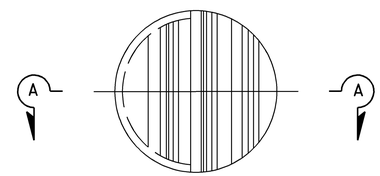

FRONT VIEW

DIRECTIONAL LOUVER

Directional louvers shall be oriented as directed by the Engineer and secured in place with one plated brass machine screw and nut.

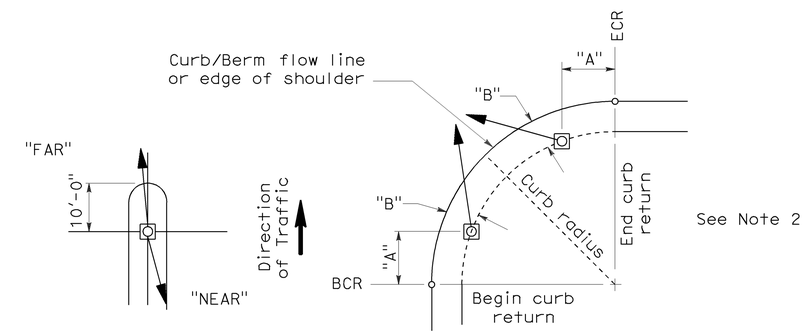

NOTES:

1. Typical signal pole placement unless dimensioned on plans.
2. For "A" and "B" dimensions, see Pole Schedule, or as directed by the Engineer.

SIGNAL STANDARD PLACEMENT DIMENSIONS AND EQUIPMENT LOCATIONS

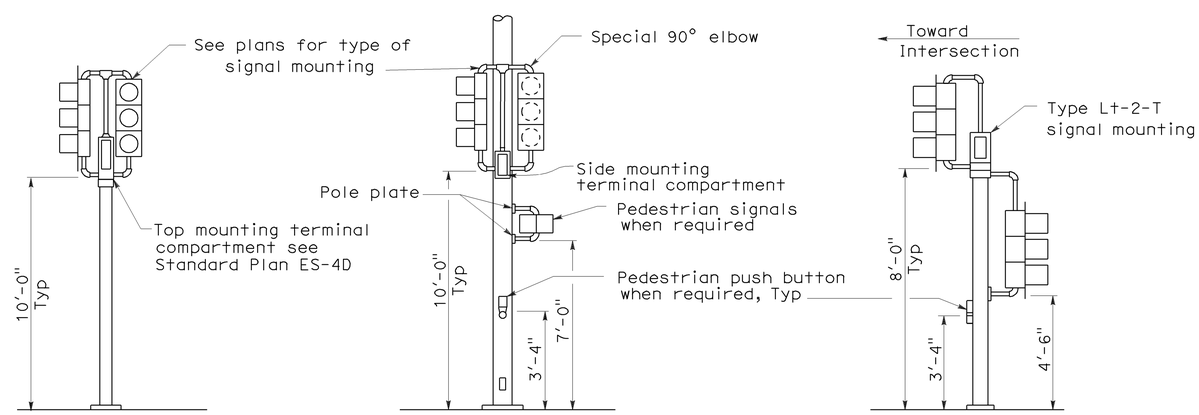

TOP MOUNTED SIGNALS (TV)

Type 1-A, 1-B, 1-C and 1-D standard as indicated on the plans

SIDE MOUNTED SIGNALS (SV AND SP)

Normally used on standards with luminaire or signal mast arm

LEFT TURN LANE SIGNAL

Type 1-A, 1-B, 1-C and 1-D standard as indicated on plans

TYPICAL SIGNAL INSTALLATIONS

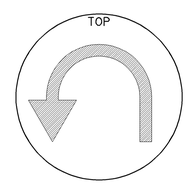

U-TURN SIGNAL FACE

BICYCLE SIGNAL FACE

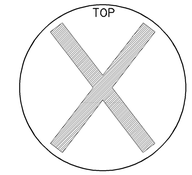

LANE CONTROL SIGNAL FACE

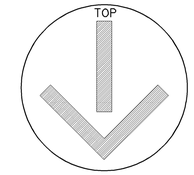

LANE CONTROL SIGNAL FACE

STATE OF CALIFORNIA
DEPARTMENT OF TRANSPORTATION

ELECTRICAL SYSTEMS (SIGNAL HEADS AND MOUNTINGS)

NO SCALE

RSP ES-4C DATED JUNE 6, 2008 SUPERSEDES STANDARD PLAN ES-4C DATED MAY 1, 2006 - PAGE 420 OF THE STANDARD PLANS BOOK DATED MAY 2006.

REVISED STANDARD PLAN RSP ES-4C

5-19-08

DIST	COUNTY	ROUTE	POST MILES TOTAL PROJECT	SHEET NO.	TOTAL SHEETS
03	Yol	113	R0.3/R10.3	41	44

Jeffery G. McRae
REGISTERED ELECTRICAL ENGINEER

June 6, 2008
PLANS APPROVAL DATE

REGISTERED PROFESSIONAL ENGINEER
Jeffery G. McRae
No. E14512
Exp. 6-30-10
ELECTRICAL
STATE OF CALIFORNIA

The State of California or its officers or agents shall not be responsible for the accuracy or completeness of electronic copies of this plan sheet.

To accompany plans dated 1-30-12

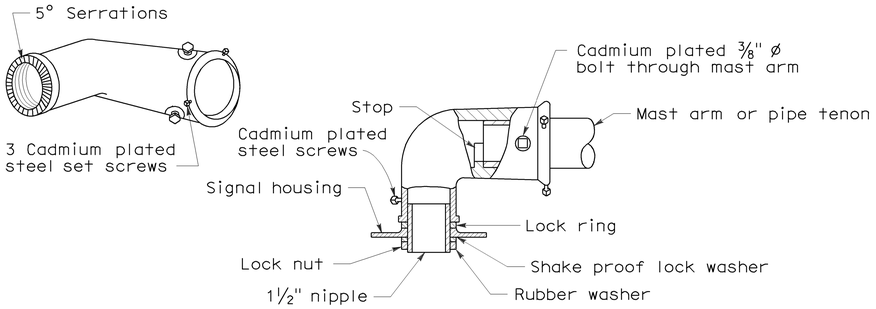

MAST ARM MOUNTING - TYPE "MAT"

For 2 NPS pipe, see Note 1.

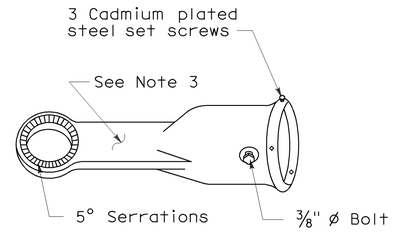

MAST ARM MOUNTING - TYPE "MAS"

For 2 NPS pipe. See Note 1.

SIGNAL SLIP FITTERS

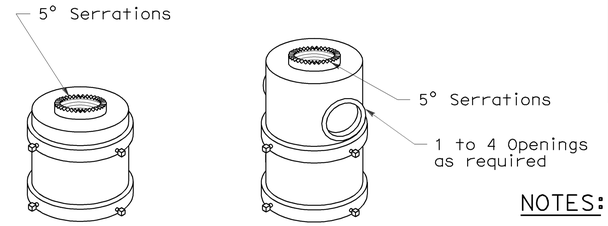

For one mounting For mulitiple mountings

TOP MOUNTINGS

For 4 NPS pipe, see Note 2.

NOTES:

1. After mast arm signal has been plumbed and secured, drill 7/16" hole through mast arm tenon in line with slip fitter hole. Place a cadmium plated 3/8" ø galvanized bolt with washer under bolt head through hole and secure with washer, nut, and locknut. Seal openings between mast arm mountings and mast arm with mastic.
2. (a) Threaded top mounted slip fitter openings shall be 1½ NPS.
   (b) Serrations in fittings shall match those on bottom of signal heads or in lock ring.
   (c) Top opening shall be offset when backplate is used.
3. Wireway shall have a cross section area of 0.95 square inch minimum. Minimum width of ½".

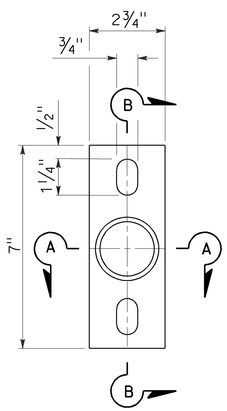

POLE PLATE

For side mountings

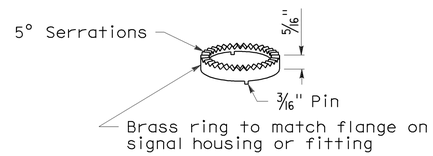

LOCK RING

Use where locking ring is not integral with signal housing or fitting.

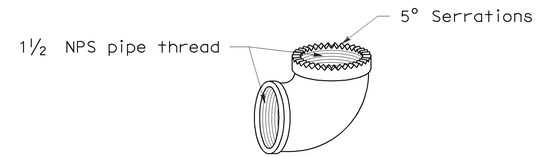

SPECIAL 90° ELBOW

One for each signal head, except those with special slip fitter mounting

MISCELLANEOUS MOUNTING HARDWARE

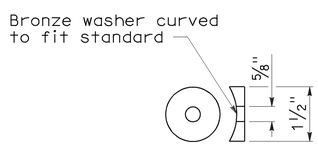

DETAIL "C"

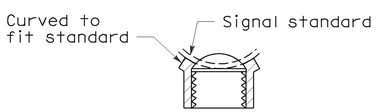

SECTION A-A

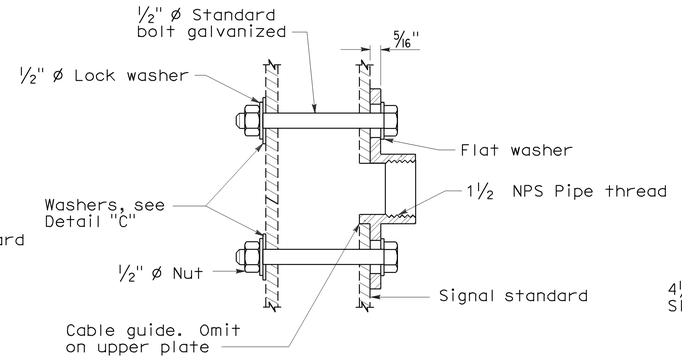

SECTION B-B

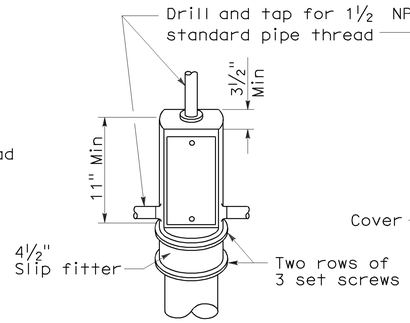

TOP MOUNTING

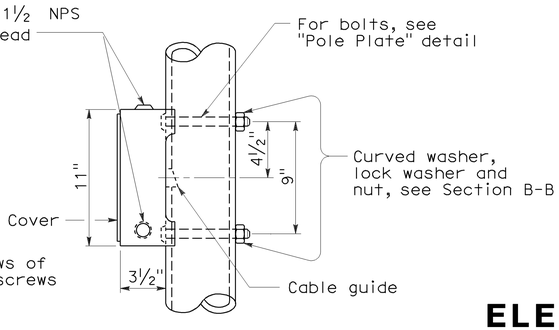

SIDE MOUNTING

TERMINAL COMPARTMENTS

STATE OF CALIFORNIA
DEPARTMENT OF TRANSPORTATION

ELECTRICAL SYSTEMS (SIGNAL HEADS AND MOUNTINGS)

NO SCALE

RSP ES-4D DATED June 6, 2008 SUPERSEDES STANDARD PLAN ES-4D
DATED MAY 1, 2006 - PAGE 421 OF THE STANDARD PLANS BOOK DATED MAY 2006.

REVISED STANDARD PLAN RSP ES-4D

2006 REVISED STANDARD PLAN RSP ES-4D

5-19-08

DIST	COUNTY	ROUTE	POST MILES TOTAL PROJECT	SHEET NO.	TOTAL SHEETS
03	Yol	113	R0.3/R10.3	42	44

REGISTERED CIVIL ENGINEER

October 5, 2007
PLANS APPROVAL DATE

REGISTERED PROFESSIONAL ENGINEER
Stanley P. Johnson
No. C57793
Exp. 3-31-08
CIVIL
STATE OF CALIFORNIA

The State of California or its officers or agents shall not be responsible for the accuracy or completeness of electronic copies of this plan sheet.

To accompany plans dated 1-30-12

2006 REVISED STANDARD PLAN RSP ES-6A

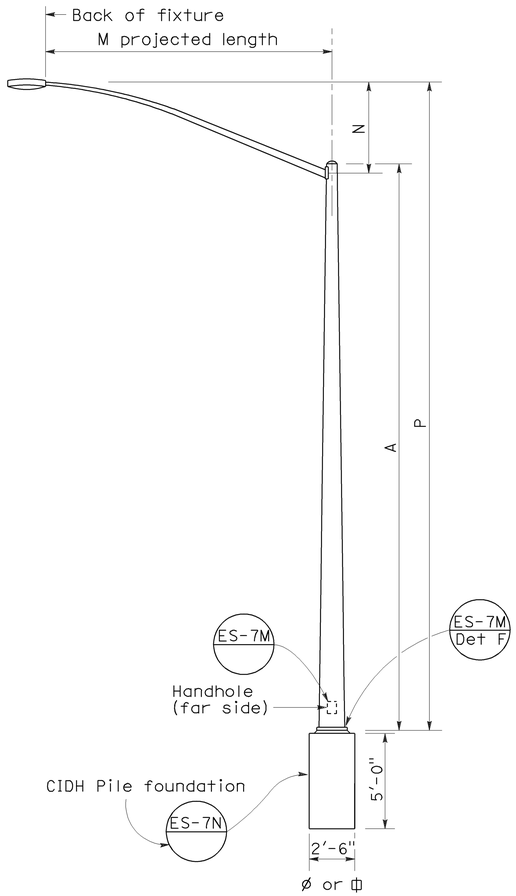

ELEVATION
TYPE 15 AND TYPE 21

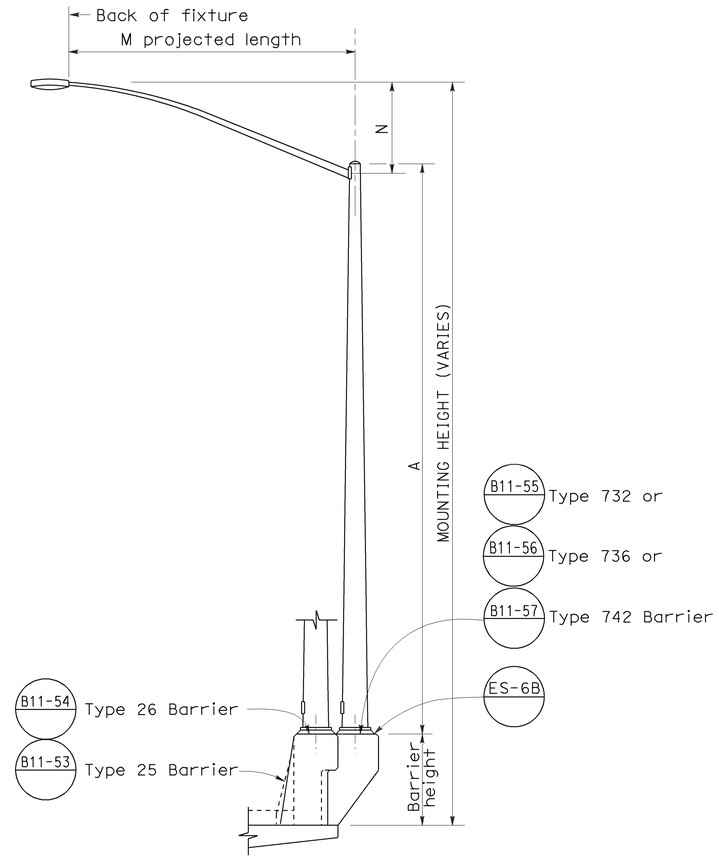

ELEVATION
TYPE 15 AND TYPE 21 BARRIER RAIL MOUNTED

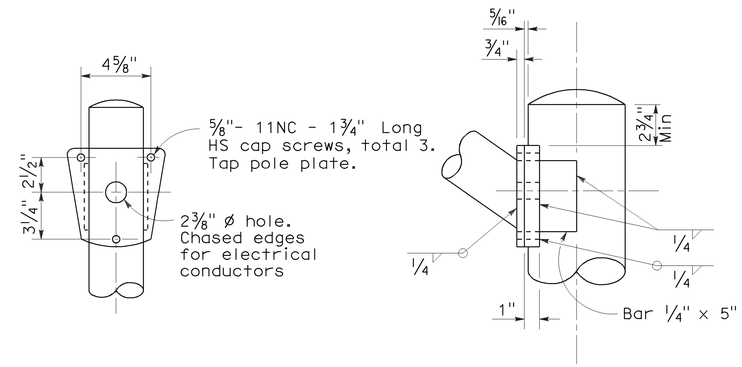

DETAIL R
LUMINAIRE ARM CONNECTION

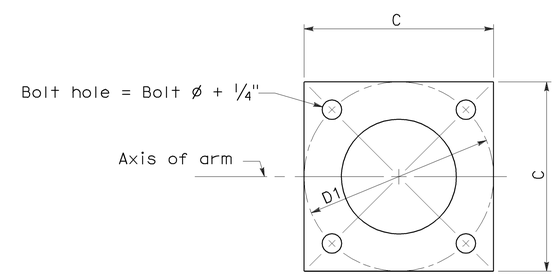

BASE PLATE

POLE TYPE	POLE DATA				BASE PLATE DATA				LUMINAIRE ARM
	A Height	Min OD Base	Min OD Top	Wall Thickness	C	D1 Bolt Circle	Thick-ness	Anchor Bolts Size	
15	30′	8"	3 7/8"	0.1196"	1′-0"	1′-0"	1"	1" ø x 3′-0" x 4"*	6′ - 15′ [12′]
21	35′	8 5/8"	3 7/8"	0.1196"	1′-0"	1′-0"	1"	1 1/4"ø x 3′-0" x 4"*	6′ - 15′ [12′]

* For barrier rail bolts, see Standard Plan ES-6B.

LUMINAIRE ARM DATA					
M Projected Length	N Rise	Min OD At Pole	Nominal Thickness	P Type 15	P Type 21
6′-0"	2′-0"±	3 1/4"	0.1196"	31′-6"±	36′-6"±
8′-0"	2′-6"±	3 1/2"	0.1196"	32′-0"±	37′-0"±
10′-0"	3′-3"±	3 7/8"	0.1196"	32′-9"±	37′-9"±
12′-0"	4′-3"±	3 7/8"	0.1196"	33′-9"±	38′-9"±
15′-0"	4′-9"±	4 1/4"	0.1196"	34′-3"±	39′-3"±

NOTES:

1. ☐ Indicates arm length to be used unless otherwise noted on the plans.
2. For Type 15-SB, use Type 15 standard with Type 30 slip base plate details, see Standard Plan ES-6F.
3. For additional notes, see Standard Plan ES-7M and ES-7N.

STATE OF CALIFORNIA
DEPARTMENT OF TRANSPORTATION

ELECTRICAL SYSTEMS (LIGHTING STANDARD TYPES 15 AND 21)

NO SCALE

RSP ES-6A DATED OCTOBER 5, 2007 SUPERCEDES STANDARD PLAN ES-6A
DATED MAY 1, 2006 - PAGE 427 OF THE STANDARD PLANS BOOK DATED MAY 2006.

REVISED STANDARD PLAN RSP ES-6A

DIST	COUNTY	ROUTE	POST MILES TOTAL PROJECT	SHEET NO.	TOTAL SHEETS
03	Yol	113	R0.3/R10.3	43	44

REGISTERED CIVIL ENGINEER

January 18, 2008
PLANS APPROVAL DATE

REGISTERED PROFESSIONAL ENGINEER
Stanley P. Johnson
No. C57793
Exp. 03-31-08
CIVIL
STATE OF CALIFORNIA

The State of California or its officers or agents shall not be responsible for the accuracy or completeness of electronic copies of this plan sheet.

To accompany plans dated 1-30-12

LUMINAIRE ARM DATA

PROJECTED LENGTH	THICKNESS	MINIMUM OD @ POLE	MOUNTING HEIGHT
* 6'-0"	0.1196"	3¼"	36'-9"±
8'-0"		3½"	37'-3"±
10'-0"		3¾"	38'-0"±
12'-0"		3¾"	39'-0"±
15'-0"		4¼"	39'-6"±
** 20'-0"	0.1793"	5"	37'-0"±

* Type 30 - arm length 6'-0" - 15'-0" maximum
** Type 31 - arm lengths 20'-0"

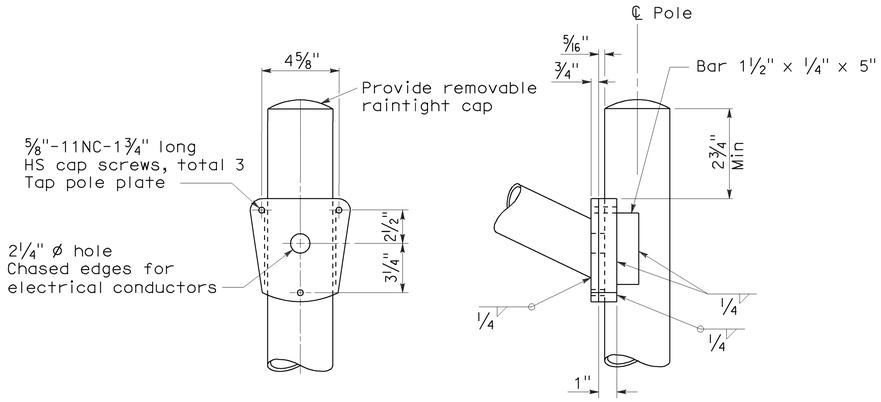

DETAIL A - TYPE 30

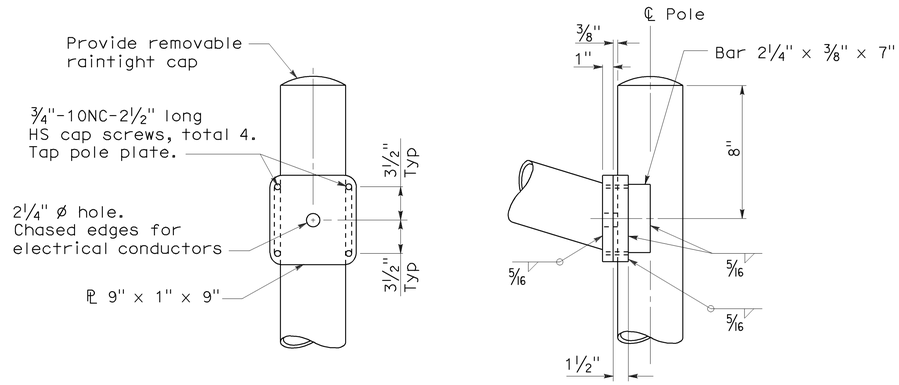

DETAIL A - TYPE 31

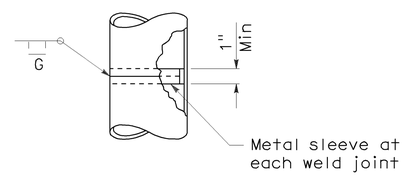

POLE SPLICE

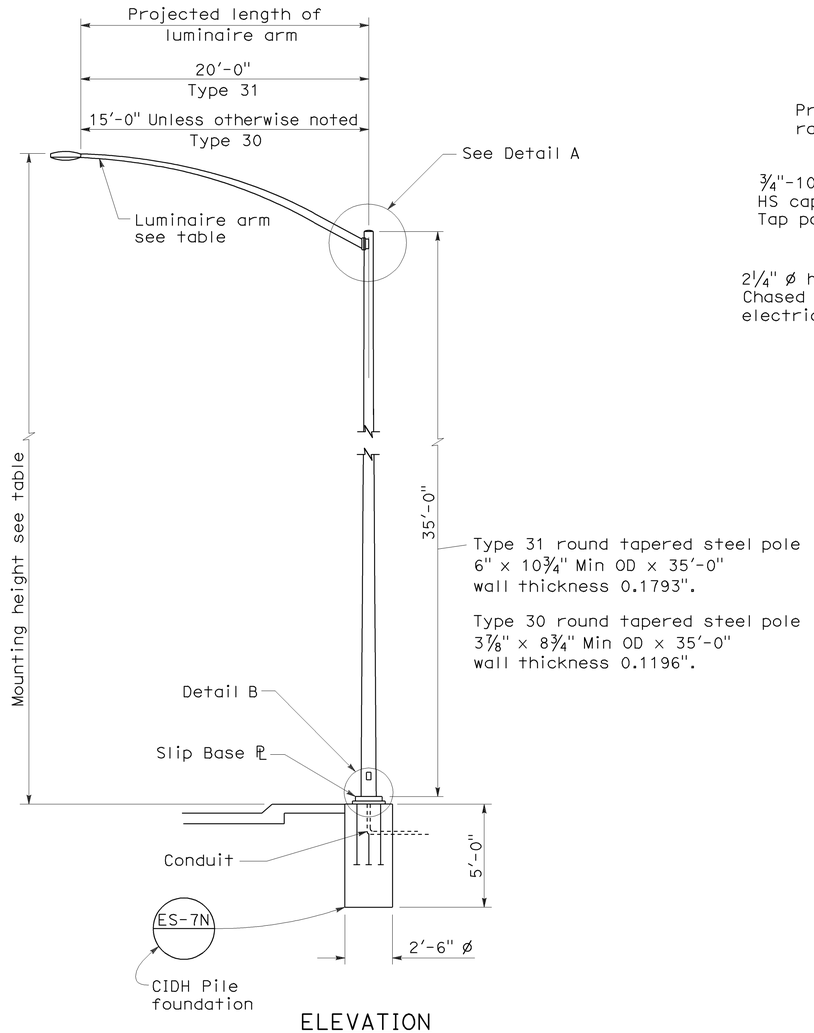

ELEVATION

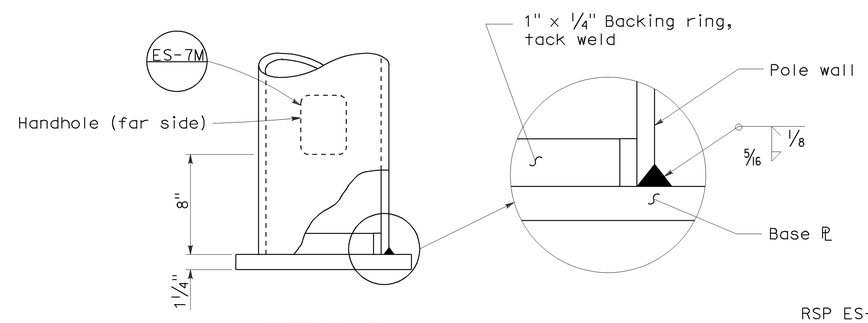

DETAIL B

NOTES:

1. Sheet steel shall have a minimum yield of 48,000 psi.
2. For slip base details see Standard Plan ES-6F.
3. For Type 30 fixed base use Type 15 base plate, and foundation shown on Revised Standard Plan RSP ES-6A. Use 1¼" Dia x 3'-6" x 4" anchor bolts.
4. For Type 31 fixed base use Type 32 base plate, anchor bolts and foundation on Standard Plan ES-6G.
5. Handhole shall be located on downstream side of traffic unless noted otherwise on plans.
6. For additional general notes refer to Standard Plan ES-7M.

STATE OF CALIFORNIA
DEPARTMENT OF TRANSPORTATION

ELECTRICAL SYSTEMS (LIGHTING STANDARD TYPES 30 AND 31)

NO SCALE

RSP ES-6E DATED JANUARY 18, 2008 SUPERCEDES STANDARD PLAN ES-6E DATED MAY 1, 2006 - PAGE 430 OF THE STANDARD PLANS BOOK DATED MAY 2006.

REVISED STANDARD PLAN RSP ES-6E

2006 REVISED STANDARD PLAN RSP ES-6E

11-19-07

DIST	COUNTY	ROUTE	POST MILES TOTAL PROJECT	SHEET NO.	TOTAL SHEETS
03	Yol	113	R0.3/R10.3	44	44

REGISTERED CIVIL ENGINEER

October 5, 2007
PLANS APPROVAL DATE

REGISTERED PROFESSIONAL ENGINEER
Stanley P. Johnson
No. C57793
Exp. 3-31-08
CIVIL
STATE OF CALIFORNIA

The State of California or its officers or agents shall not be responsible for the accuracy or completeness of electronic copies of this plan sheet.

To accompany plans dated 1-30-12

2006 REVISED STANDARD PLAN RSP ES-7B

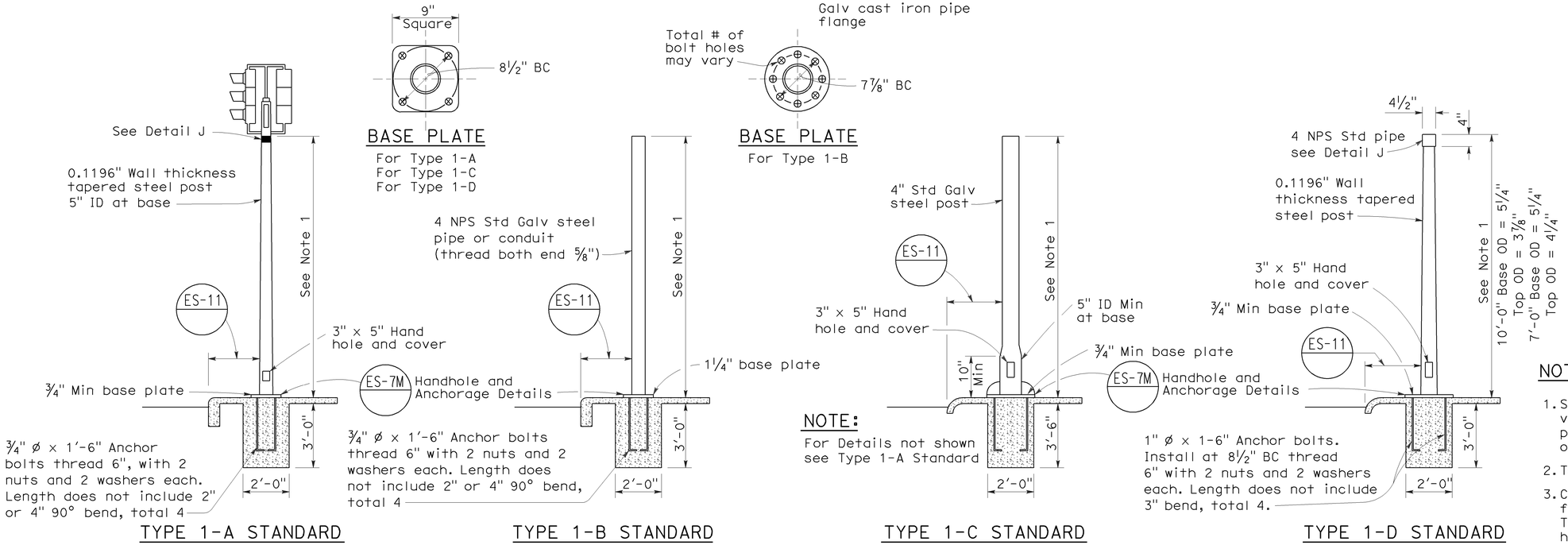

TYPE 1 SIGNAL STANDARDS

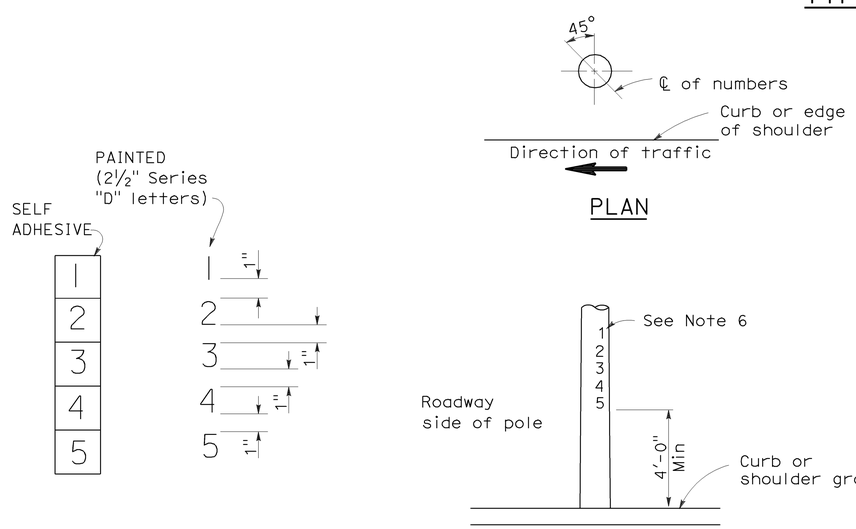

NUMBER DETAIL

TYPICAL NUMBER FORMAT

LOCATION OF EQUIPMENT NUMBERS ON STANDARDS AND POSTS

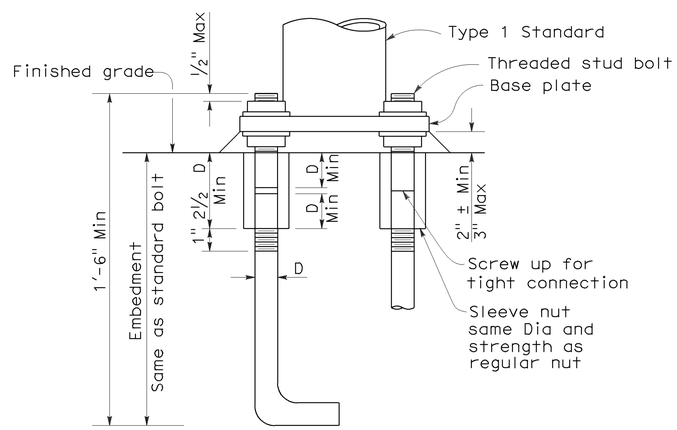

ANCHOR BOLTS WITH SLEEVE NUTS

Sleeve nuts to be used only when shown or specified on Project Plans

D = Diameter of anchor bolt

NOTES:

1. Standards shall be 10'-0" ± 2" for vehicle signals and 7'-0" ± 2" for pedestrian signals unless otherwise noted on plans.
2. Top of standards shall be 4½" OD.
3. Conduits shall extend 2" maximum above finished surface of foundation and for Types 1-A, 1-C and 1-D shall be sloped toward handhole.
4. Anchor bolts shall be bonded to conduit or grounding conductor.
5. Conduit between standard and adjacent pull box shall be 2" minimum.
6. Paint numbers on roadway side facing traffic when electrolier or post is left of direction of traffic.

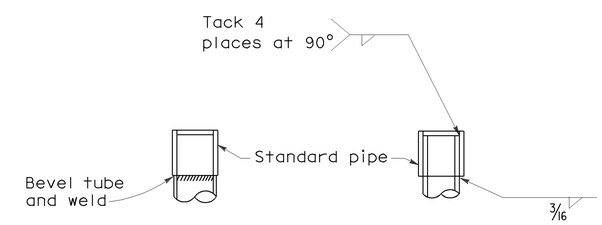

DETAIL J

Tube may be inserted into pipe or butted as required

STATE OF CALIFORNIA
DEPARTMENT OF TRANSPORTATION

ELECTRICAL SYSTEMS (SIGNAL AND LIGHTING STANDARD TYPE 1 STANDARD AND EQUIPMENT NUMBERING)

NO SCALE

RSP ES-7B DATED OCTOBER 5, 2007 SUPERCEDES STANDARD PLAN ES-7B DATED MAY 1, 2006 - PAGE 438 OF THE STANDARD PLANS BOOK DATED MAY 2006.

REVISED STANDARD PLAN RSP ES-7B

7-10-07