Dist	COUNTY	LOCATION CODE	POST MILES TOTAL PROJECT	SHEET No.	TOTAL SHEETS
03	Nev	5717		1	106

STATE OF CALIFORNIA

DEPARTMENT OF TRANSPORTATION

PROJECT PLANS FOR BUILDING CONSTRUCTION
IN NEVADA COUNTY
IN NEVADA CITY
AT THE NEVADA CITY MAINTENANCE STATION
AT 10057 GOLD FLAT ROAD

TO BE SUPPLEMENTED BY STANDARD PLANS DATED MAY 2006

INDEX OF PLANS

SHEET No.	DESCRIPTION
1	TITLE AND LOCATION MAP
2-3	TYPICAL CROSS SECTIONS
4	LAYOUT
5	CONSTRUCTION DETAILS
6	EROSION CONTROL PLAN, QUANTITIES
7	CONTOUR GRADING PLAN
8-12	DRAINAGE PLANS, PROFILES, DETAILS AND QUANTITIES
13-14	UTILITY PLAN, DETAILS AND QUANTITIES
15	SUMMARY OF QUANTITIES
16-30	REVISED AND NEW STANDARD PLANS

BUILDING PLANS

31-32	GENERAL PLANS
33-53	ARCHITECTURAL PLANS
54-72	STRUCTURAL PLANS
73-88	MECHANICAL PLANS
89-106	ELECTRICAL PLANS

THE STANDARD PLANS LIST APPLICABLE TO THIS CONTRACT IS INCLUDED IN THE NOTICE TO BIDDERS AND SPECIAL PROVISIONS BOOK.

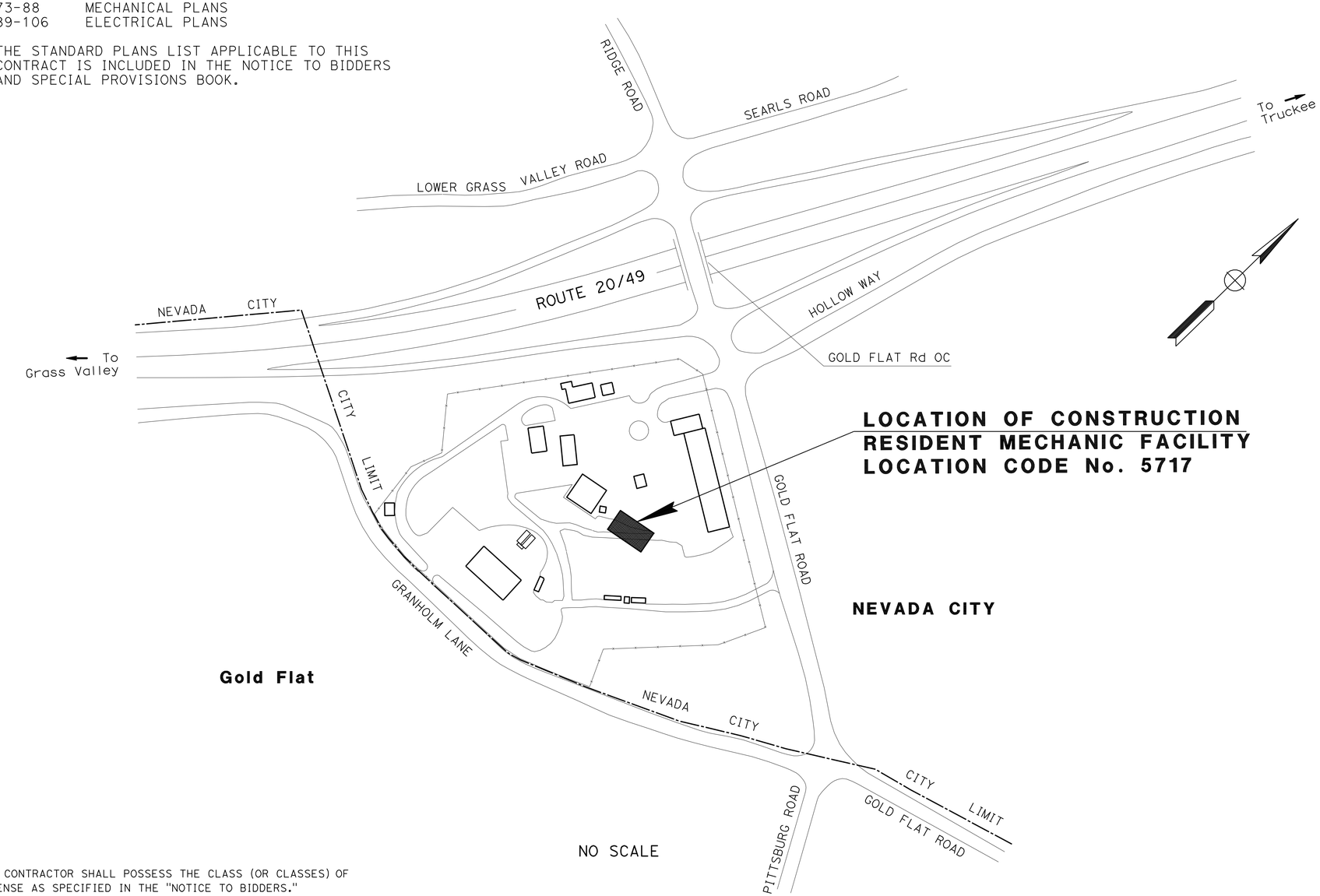

LOCATION MAP

PROJECT MANAGER: SUKHWINDER BAJWA

DESIGN ENGINEER: ROBERT E. POLGAR

Sarju D. Patel 10/30/08
PROJECT ENGINEER DATE
REGISTERED CIVIL ENGINEER

REGISTERED PROFESSIONAL ENGINEER
SARJU D. PATEL
No. C 65611
Exp. 09-30-09
CIVIL
STATE OF CALIFORNIA

January 26, 2009
PLANS APPROVAL DATE

THE STATE OF CALIFORNIA OR ITS OFFICERS OR AGENTS SHALL NOT BE RESPONSIBLE FOR THE ACCURACY OR COMPLETENESS OF SCANNED COPIES OF THIS PLAN SHEET.

THE CONTRACTOR SHALL POSSESS THE CLASS (OR CLASSES) OF LICENSE AS SPECIFIED IN THE "NOTICE TO BIDDERS."

CONTRACT No. **03-318004**

LAST REVISION 08-01-08 | DATE PLOTTED => 21-JAN-2010 | TIME PLOTTED => 05:56

Dist	COUNTY	LOCATION CODE	POST MILES TOTAL PROJECT	SHEET No.	TOTAL SHEETS
03	Nev	5717		2	106

Sarju D. Patel 10/30/08
REGISTERED CIVIL ENGINEER DATE

1-26-09
PLANS APPROVAL DATE

REGISTERED PROFESSIONAL ENGINEER
SARJU D. PATEL
No. C 65611
Exp. 09-30-09
CIVIL
STATE OF CALIFORNIA

THE STATE OF CALIFORNIA OR ITS OFFICERS OR AGENTS SHALL NOT BE RESPONSIBLE FOR THE ACCURACY OR COMPLETENESS OF ELECTRONIC COPIES OF THIS PLAN SHEET.

NOTE:

1. DIMENSIONS OF THE PAVEMENT STRUCTURES (STRUCTURAL SECTIONS) ARE SUBJECT TO TOLERANCES SPECIFIED IN THE STANDARD SPECIFICATIONS.

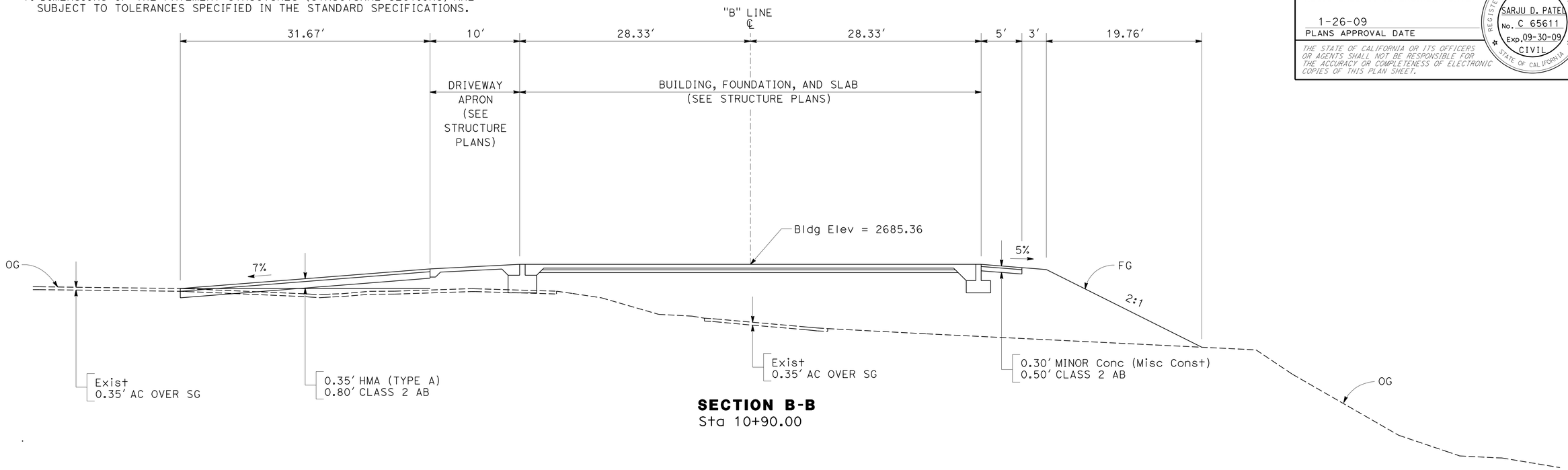

SECTION B-B
Sta 10+90.00

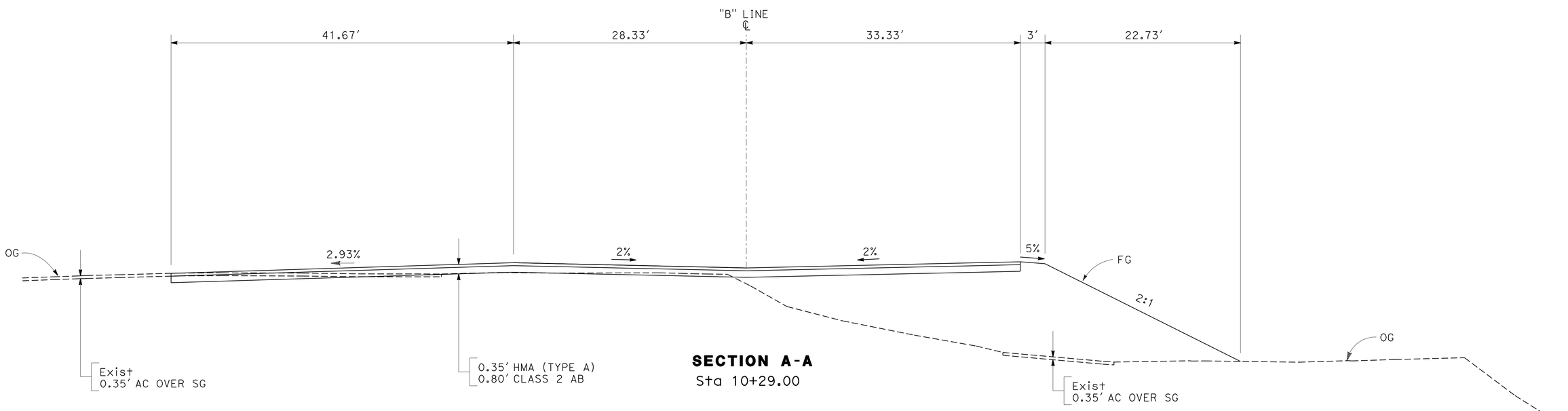

SECTION A-A
Sta 10+29.00

TYPICAL CROSS SECTIONS
NO SCALE

X-1

STATE OF CALIFORNIA - DEPARTMENT OF TRANSPORTATION
Caltrans
DESIGN

FUNCTIONAL SUPERVISOR: ROBERT E. POLGAR
CALCULATED-DESIGNED BY: F. BATATAN
CHECKED BY: SARJU D. PATEL
REVISED BY
DATE REVISED

LAST REVISION 08-01-08
DATE PLOTTED => 21-JAN-2010
TIME PLOTTED => 05:56

Dist	COUNTY	LOCATION CODE	POST MILES TOTAL PROJECT	SHEET No.	TOTAL SHEETS
03	Nev	5717		3	106

Sarju D. Patel 10/30/08
REGISTERED CIVIL ENGINEER DATE

1-26-09
PLANS APPROVAL DATE

REGISTERED PROFESSIONAL ENGINEER
SARJU D. PATEL
No. C 65611
Exp. 09-30-09
CIVIL
STATE OF CALIFORNIA

THE STATE OF CALIFORNIA OR ITS OFFICERS OR AGENTS SHALL NOT BE RESPONSIBLE FOR THE ACCURACY OR COMPLETENESS OF ELECTRONIC COPIES OF THIS PLAN SHEET.

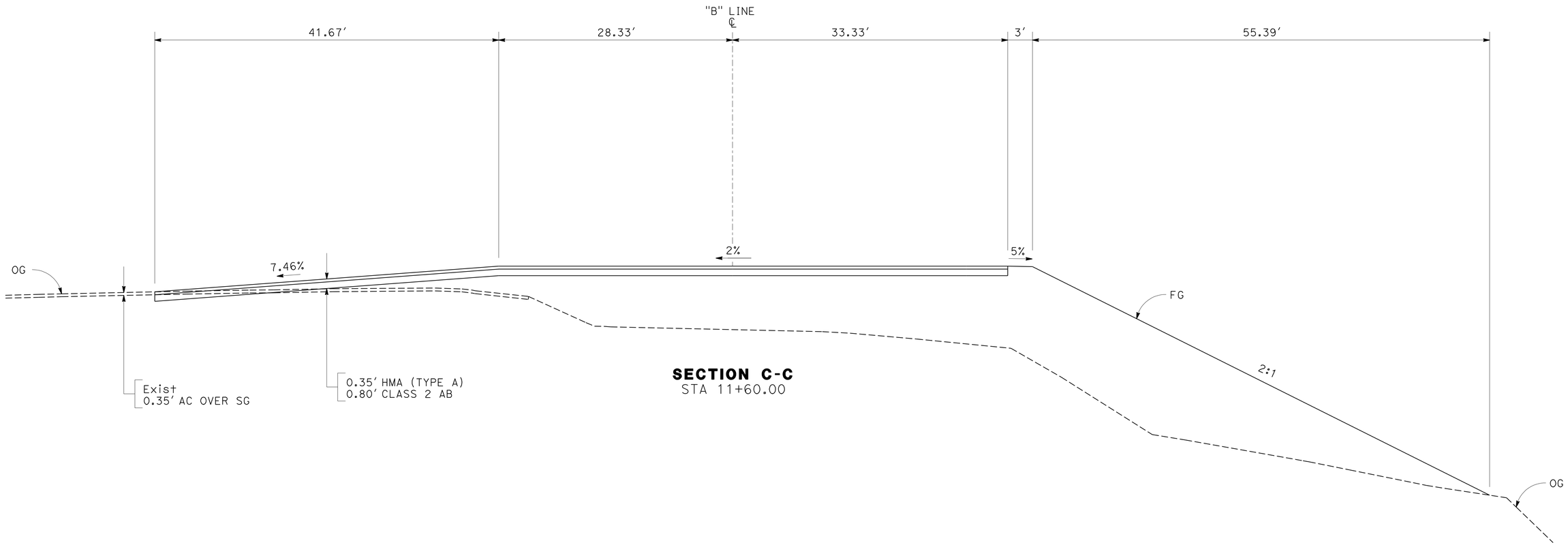

SECTION C-C
STA 11+60.00

TYPICAL CROSS SECTIONS
NO SCALE

X-2

STATE OF CALIFORNIA - DEPARTMENT OF TRANSPORTATION
Caltrans
DESIGN

FUNCTIONAL SUPERVISOR: ROBERT E. POLGAR

CALCULATED-DESIGNED BY: F. BATATAN
CHECKED BY: SARJU D. PATEL

REVISED BY
DATE REVISED

LAST REVISION 08-01-08
DATE PLOTTED => 21-JAN-2010
TIME PLOTTED => 05:56

Dist	COUNTY	LOCATION CODE	POST MILES TOTAL PROJECT	SHEET No.	TOTAL SHEETS
03	Nev	5717		4	106

Sarju D. Patel 10/30/08
REGISTERED CIVIL ENGINEER DATE

1-26-09
PLANS APPROVAL DATE

REGISTERED PROFESSIONAL ENGINEER
SARJU D. PATEL
No. C 65611
Exp. 09-30-09
CIVIL
STATE OF CALIFORNIA

THE STATE OF CALIFORNIA OR ITS OFFICERS OR AGENTS SHALL NOT BE RESPONSIBLE FOR THE ACCURACY OR COMPLETENESS OF ELECTRONIC COPIES OF THIS PLAN SHEET.

NOTES:

1. FOR COMPLETE R/W AND ACCURATE ACCESS DATA, SEE R/W RECORD MAPS AT DISTRICT OFFICE.

2. SEE STRUCTURE PLANS FOR BUILDING, COVERED STORAGE AREA, CONCRETE AREA, AND UTILITY CONNECTION DETAILS.

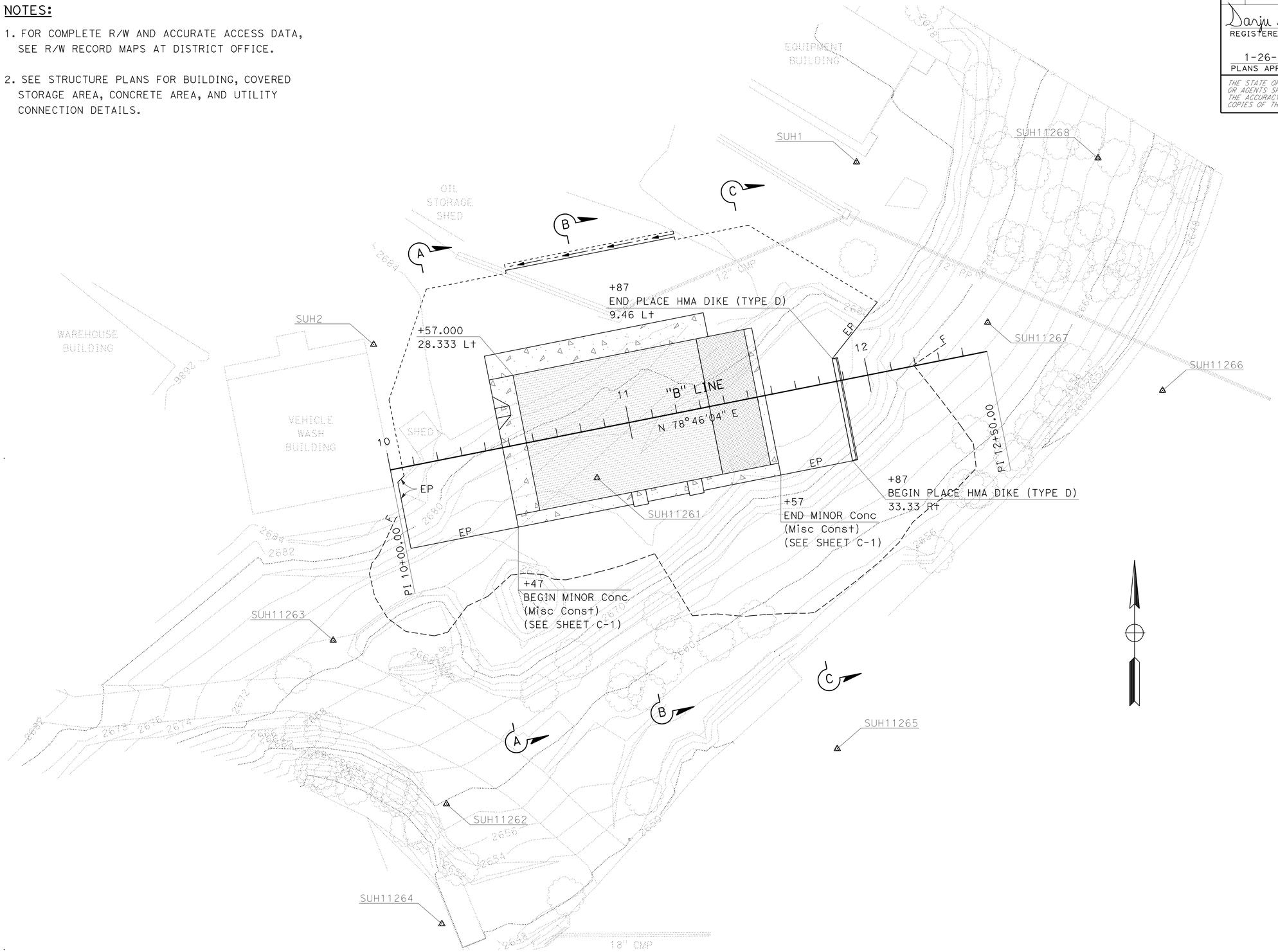

LEGEND:

- ------- SAW CUT LINE
- BUILDING AREA
- COVERED STORAGE AREA
- CONCRETE AREA

LAYOUT
SCALE: 1"=20'

L-1

STATE OF CALIFORNIA - DEPARTMENT OF TRANSPORTATION
Caltrans
DESIGN

FUNCTIONAL SUPERVISOR: ROBERT E. POLGAR
CALCULATED-DESIGNED BY: F. BATATAN
CHECKED BY: SARJU D. PATEL
REVISED BY
DATE REVISED

LAST REVISION 08-01-08
DATE PLOTTED => 21-JAN-2010
TIME PLOTTED => 05:56

BORDER LAST REVISED 3/1/2007
RELATIVE BORDER SCALE IS IN INCHES 0 1 2 3
USERNAME => trmikesl
DGN FILE => 331800ea001.dgn
CU 03225
EA 318001

Dist	COUNTY	LOCATION CODE	POST MILES TOTAL PROJECT	SHEET No.	TOTAL SHEETS
03	Nev	5717		5	106

Sarju D. Patel 10/30/08
REGISTERED CIVIL ENGINEER DATE

1-26-09
PLANS APPROVAL DATE

REGISTERED PROFESSIONAL ENGINEER
SARJU D. PATEL
No. C 65611
Exp. 09-30-09
CIVIL
STATE OF CALIFORNIA

THE STATE OF CALIFORNIA OR ITS OFFICERS OR AGENTS SHALL NOT BE RESPONSIBLE FOR THE ACCURACY OR COMPLETENESS OF ELECTRONIC COPIES OF THIS PLAN SHEET.

NOTES:

1. FOR ASPHALT CONCRETE DIKE DETAILS NOT SHOWN, SEE STANDARD PLAN A87B.

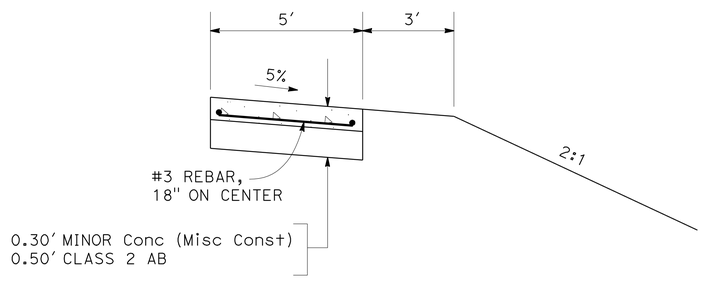

SECTION D-D

MINOR CONCRETE (MISCELLANEOUS CONSTRUCTION) DETAIL

STA "B" 10+47 Rt TO 11+57 Rt

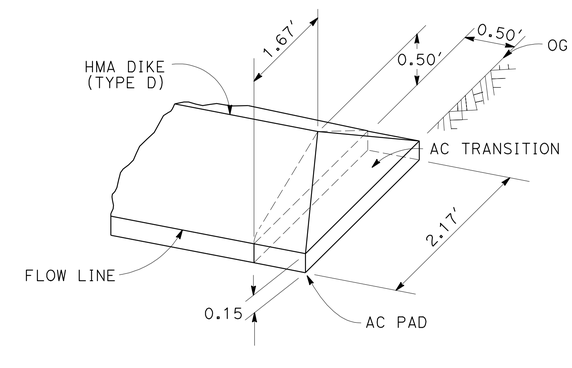

HOT MIX ASPHALT DIKE (TYPE D)
APPROACH TRANSITION

CONSTRUCTION DETAILS

NO SCALE

C-1

STATE OF CALIFORNIA - DEPARTMENT OF TRANSPORTATION
Caltrans DESIGN

FUNCTIONAL SUPERVISOR: ROBERT E. POLGAR
CALCULATED-DESIGNED BY: F. BATATAN
CHECKED BY: SARJU D. PATEL
REVISED BY
DATE REVISED

LAST REVISION 08-01-08
DATE PLOTTED => 21-JAN-2010
TIME PLOTTED => 05:56

Dist	COUNTY	LOCATION	POST MILES TOTAL PROJECT	SHEET No.	TOTAL SHEETS
03	Nev	5717		6	106

LICENSED LANDSCAPE ARCHITECT 10-30-08

1-26-09
PLANS APPROVAL DATE

LICENSED LANDSCAPE ARCHITECT
JERRY L. PIETRZAK
Expires 12-31-09
Renewal Date
10-30-08
Date
STATE OF CALIFORNIA

THE STATE OF CALIFORNIA OR ITS OFFICERS OR AGENTS SHALL NOT BE RESPONSIBLE FOR THE ACCURACY OR COMPLETENESS OF SCANNED COPIES OF THIS PLAN SHEET.

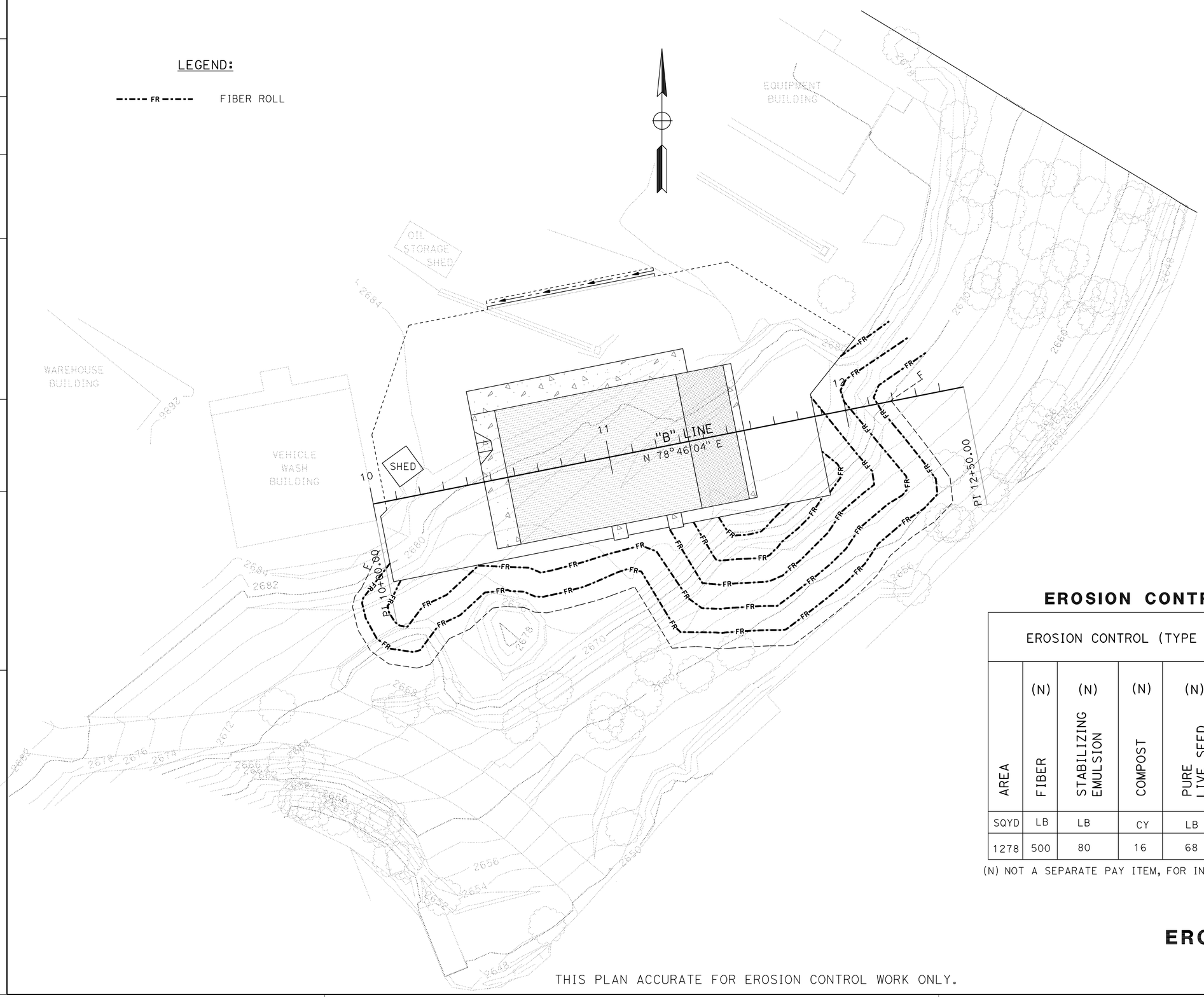

EROSION CONTROL

EROSION CONTROL (TYPE D)						
AREA	(N) FIBER	(N) STABILIZING EMULSION	(N) COMPOST	(N) PURE LIVE SEED	(N) STRAW	FIBER ROLL
SQYD	LB	LB	CY	LB	TON	LF
1278	500	80	16	68	0.53	1064

(N) NOT A SEPARATE PAY ITEM, FOR INFORMATION ONLY.

THIS PLAN ACCURATE FOR EROSION CONTROL WORK ONLY.

EROSION CONTROL PLAN

SCALE: 1"=20'

EC-1

STATE OF CALIFORNIA - DEPARTMENT OF TRANSPORTATION
Caltrans® LANDSCAPE ARCHITECTURE

SENIOR LANDSCAPE ARCHITECT: J.D. ADAMS
CALCULATED-DESIGNED BY: J. DONOHOE
CHECKED BY: J. PIETRZAK
REVISED BY
DATE REVISED

LAST REVISION 00-00-00
DATE PLOTTED => 21-JAN-2010
TIME PLOTTED => 05:56

Dist	COUNTY	LOCATION CODE	POST MILES TOTAL PROJECT	SHEET No.	TOTAL SHEETS
03	Nev	5717		7	106

Sarju D. Patel 10/30/08
REGISTERED CIVIL ENGINEER DATE

1-26-09
PLANS APPROVAL DATE

REGISTERED PROFESSIONAL ENGINEER
SARJU D. PATEL
No. C 65611
Exp. 09-30-09
CIVIL
STATE OF CALIFORNIA

THE STATE OF CALIFORNIA OR ITS OFFICERS OR AGENTS SHALL NOT BE RESPONSIBLE FOR THE ACCURACY OR COMPLETENESS OF ELECTRONIC COPIES OF THIS PLAN SHEET.

NOTES:

1. THIS PLAN ACCURATE FOR CONTOUR GRADING WORK ONLY.
2. CONTOUR INTERVAL = 2′

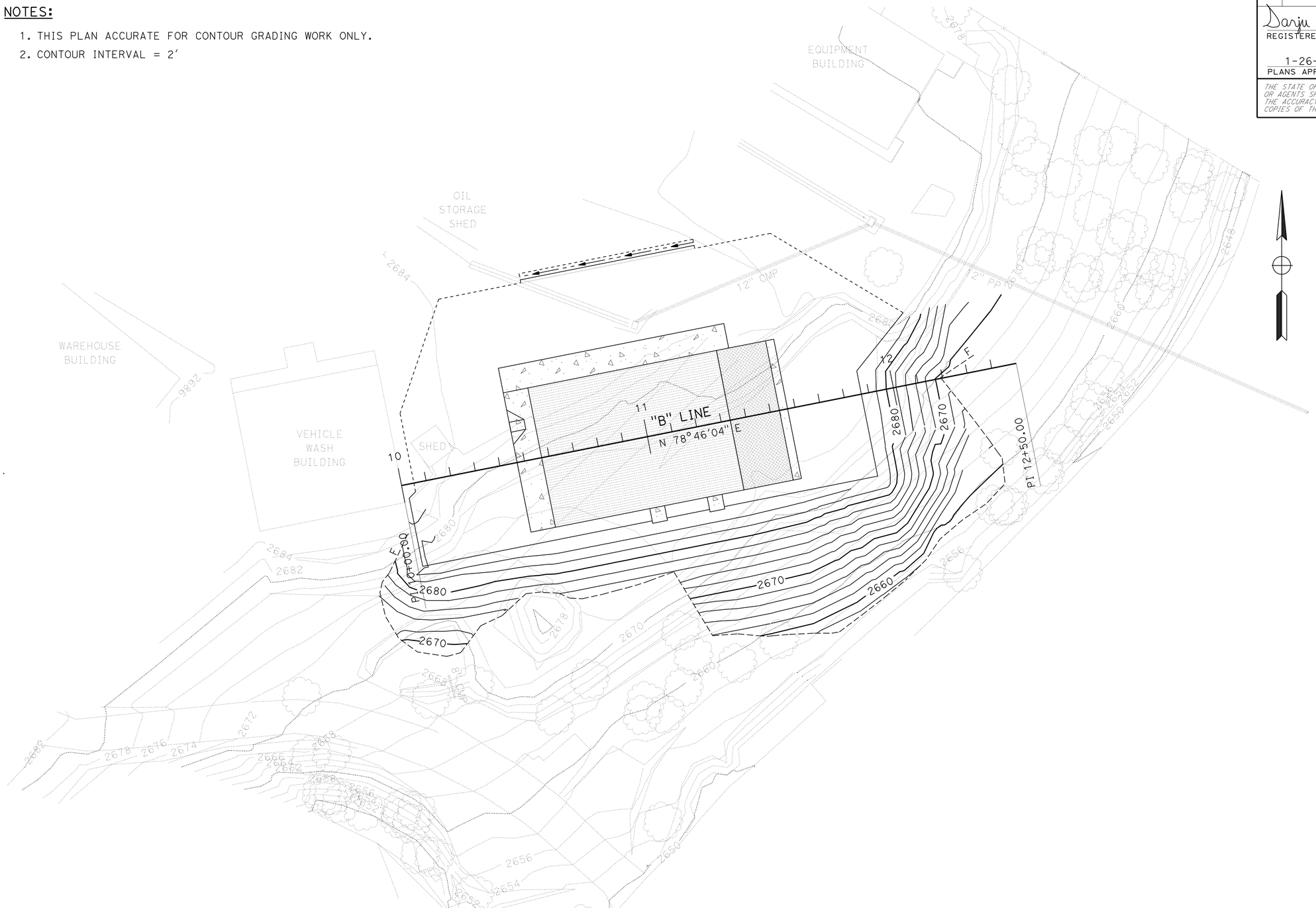

CONTOUR GRADING

SCALE: 1"=20′

G-1

STATE OF CALIFORNIA - DEPARTMENT OF TRANSPORTATION
Caltrans
DESIGN

FUNCTIONAL SUPERVISOR: ROBERT E. POLGAR
CALCULATED-DESIGNED BY: F. BATATAN
CHECKED BY: SARJU D. PATEL
REVISED BY
DATE REVISED

LAST REVISION 08-01-08
DATE PLOTTED => 21-JAN-2010
TIME PLOTTED => 05:57

Dist	COUNTY	LOCATION CODE	POST MILES TOTAL PROJECT	SHEET No.	TOTAL SHEETS
03	Nev	5717		8	106

Sarju D. Patel 10/30/08
REGISTERED CIVIL ENGINEER DATE

1-26-09
PLANS APPROVAL DATE

REGISTERED PROFESSIONAL ENGINEER
SARJU D. PATEL
No. C 65611
Exp. 09-30-09
CIVIL
STATE OF CALIFORNIA

THE STATE OF CALIFORNIA OR ITS OFFICERS OR AGENTS SHALL NOT BE RESPONSIBLE FOR THE ACCURACY OR COMPLETENESS OF ELECTRONIC COPIES OF THIS PLAN SHEET.

NOTE:

1. THIS PLAN ACCURATE FOR DRAINAGE WORK ONLY.

LEGEND:

- X — DRAINAGE SYSTEM No.
- x — DRAINAGE UNIT
- CONCRETE
- SAW CUT LINE
- BUILDING AREA
- COVERED STORAGE AREA

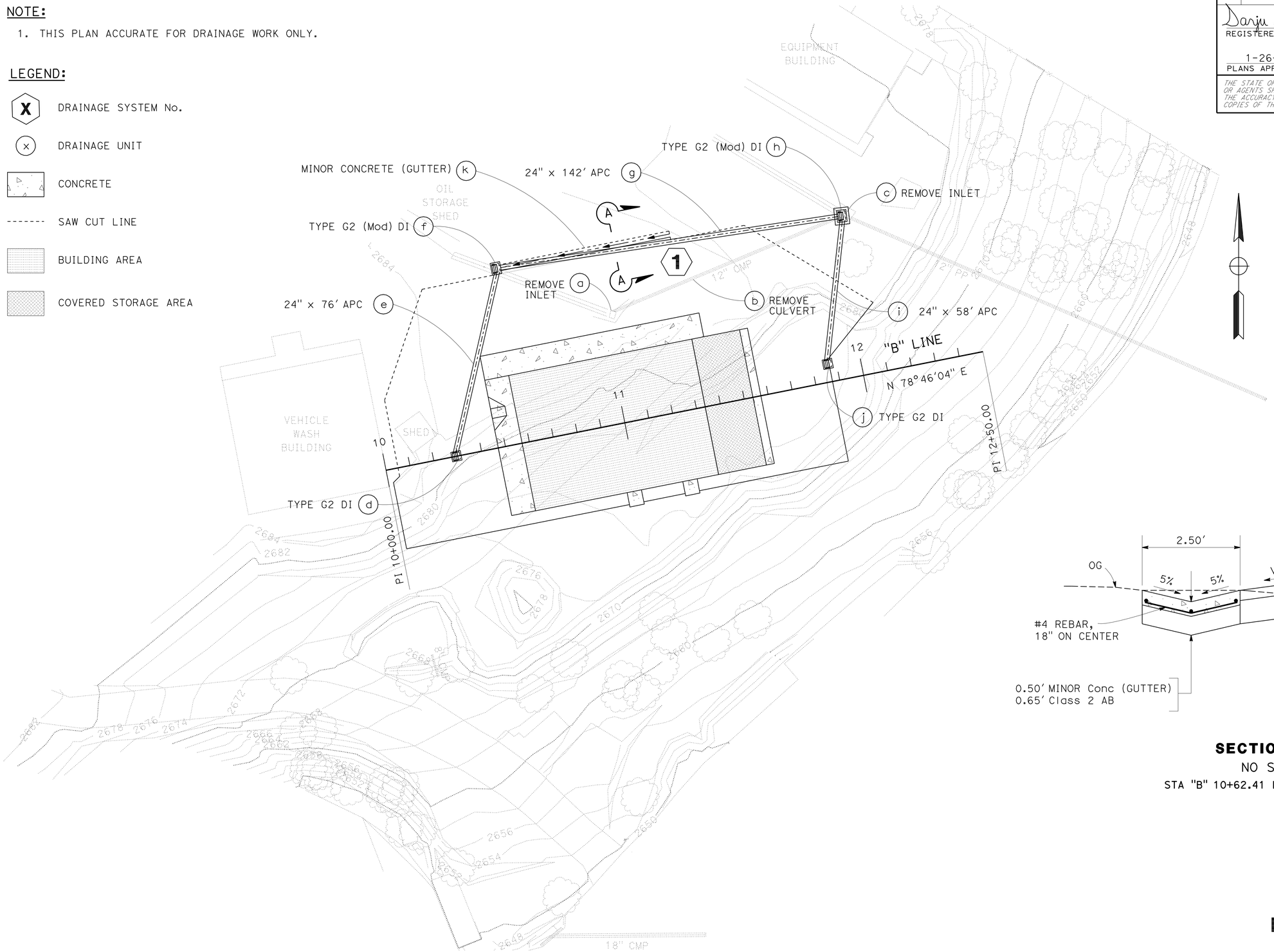

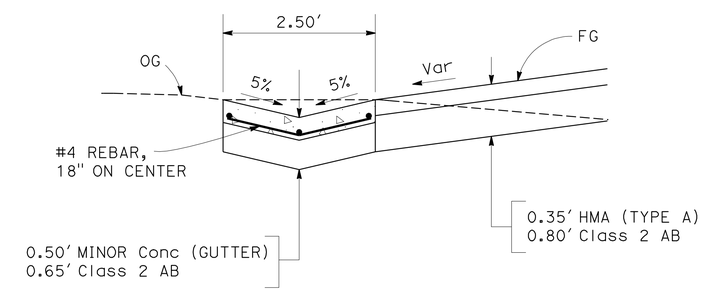

SECTION A-A
NO SCALE
STA "B" 10+62.41 Lt TO 11+33.12 Lt

DRAINAGE PLAN

SCALE: 1"=20'

D-1

REVISED BY	DATE REVISED
W. MACK	04/16/08

CALCULATED-DESIGNED BY: F. BATATAN
CHECKED BY: SARJU D. PATEL
FUNCTIONAL SUPERVISOR: ROBERT E. POLGAR

STATE OF CALIFORNIA - DEPARTMENT OF TRANSPORTATION
Caltrans
DESIGN

LAST REVISION 08-01-08
DATE PLOTTED => 21-JAN-2010
TIME PLOTTED => 05:57

Dist	COUNTY	LOCATION CODE	POST MILES TOTAL PROJECT	SHEET No.	TOTAL SHEETS
03	Nev	5717		9	106

Sarju D. Patel 10/30/08
REGISTERED CIVIL ENGINEER DATE

1-26-09
PLANS APPROVAL DATE

REGISTERED PROFESSIONAL ENGINEER
SARJU D. PATEL
No. C 65611
Exp. 09-30-09
CIVIL
STATE OF CALIFORNIA

THE STATE OF CALIFORNIA OR ITS OFFICERS OR AGENTS SHALL NOT BE RESPONSIBLE FOR THE ACCURACY OR COMPLETENESS OF ELECTRONIC COPIES OF THIS PLAN SHEET.

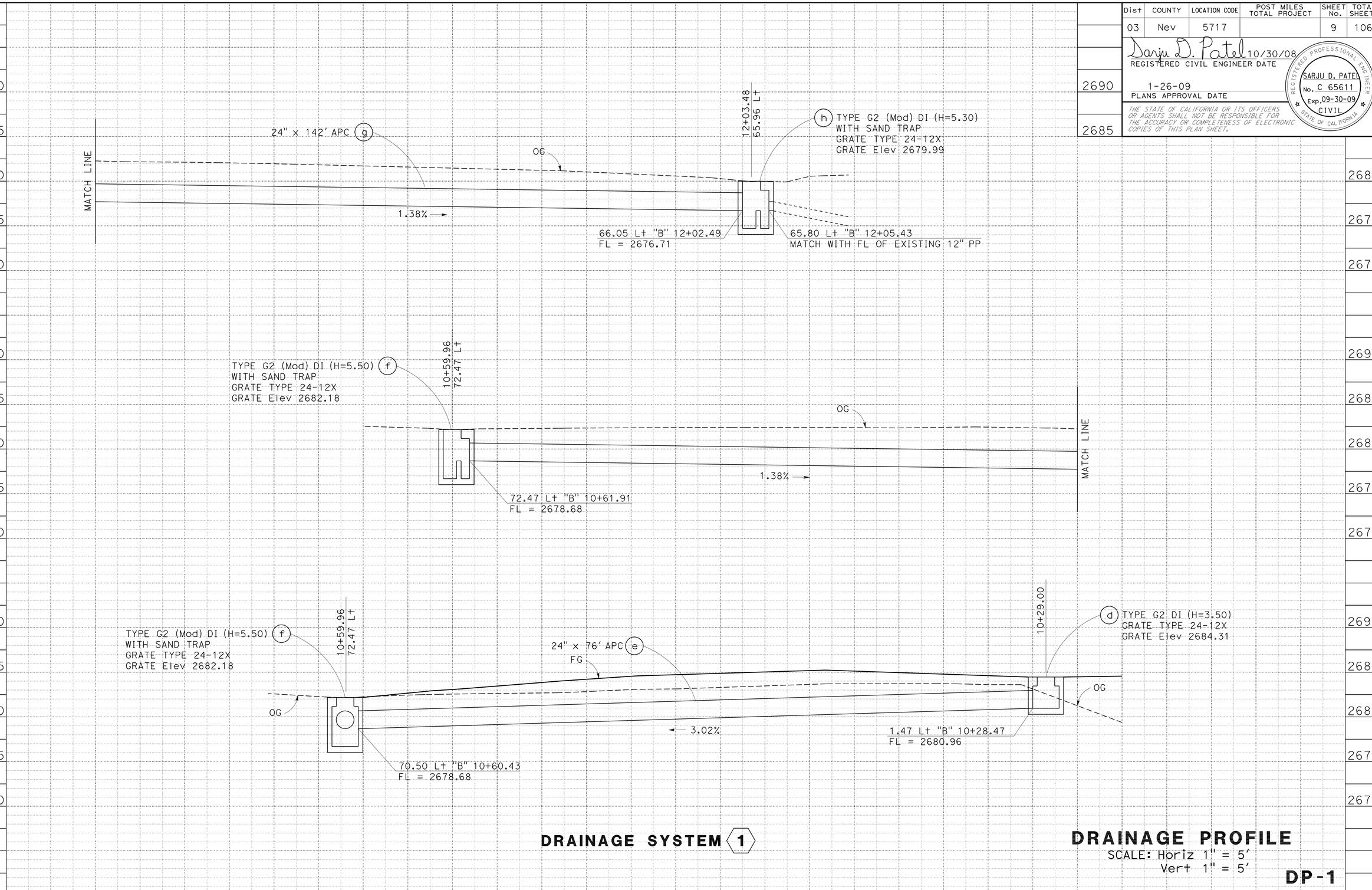

DRAINAGE SYSTEM 1

DRAINAGE PROFILE

SCALE: Horiz 1" = 5'
Vert 1" = 5'

DP-1

STATION		TOTAL
CY	Exc	
	Emb	

REVISED BY	DATE REVISED
W. MACK	04/16/08

CALCULATED-DESIGNED BY: F. BATATAN
CHECKED BY: SARJU D. PATEL
FUNCTIONAL SUPERVISOR: ROBERT E. POLGAR

STATE OF CALIFORNIA - DEPARTMENT OF TRANSPORTATION
Caltrans
DESIGN

LAST REVISION 08-01-08
DATE PLOTTED => 21-JAN-2010
TIME PLOTTED => 05:57

Dist	COUNTY	LOCATION CODE	POST MILES TOTAL PROJECT	SHEET No.	TOTAL SHEETS
03	Nev	5717		10	106

Sarju D. Patel 10/30/08
REGISTERED CIVIL ENGINEER DATE

1-26-09
PLANS APPROVAL DATE

REGISTERED PROFESSIONAL ENGINEER
SARJU D. PATEL
No. C 65611
Exp. 09-30-09
CIVIL
STATE OF CALIFORNIA

THE STATE OF CALIFORNIA OR ITS OFFICERS OR AGENTS SHALL NOT BE RESPONSIBLE FOR THE ACCURACY OR COMPLETENESS OF ELECTRONIC COPIES OF THIS PLAN SHEET.

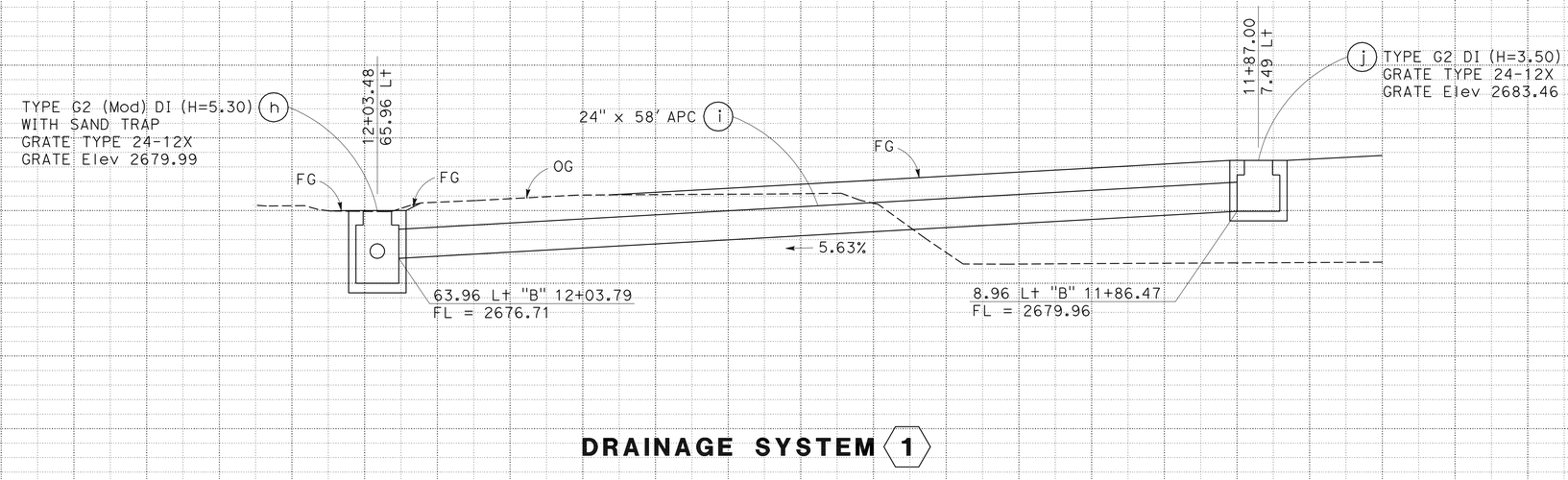

DRAINAGE SYSTEM 1

DRAINAGE PROFILE

SCALE: Horiz 1" = 5'
Vert 1" = 5'

DP-2

STATION		TOTAL
CY	Exc	
	Emb	

STATE OF CALIFORNIA - DEPARTMENT OF TRANSPORTATION
Caltrans
DESIGN

FUNCTIONAL SUPERVISOR: ROBERT E. POLGAR
CALCULATED-DESIGNED BY: F. BATATAN
CHECKED BY: SARJU D. PATEL
REVISED BY: W. MACK
DATE REVISED: 04/16/08

LAST REVISION 08-01-08
DATE PLOTTED => 21-JAN-2010
TIME PLOTTED => 05:57

Dist	COUNTY	LOCATION CODE	POST MILES TOTAL PROJECT	SHEET No.	TOTAL SHEETS
03	Nev	5717		11	106

Sarju D. Patel 10/30/08
REGISTERED CIVIL ENGINEER DATE

1-26-09
PLANS APPROVAL DATE

REGISTERED PROFESSIONAL ENGINEER
SARJU D. PATEL
No. C 65611
Exp. 09-30-09
CIVIL
STATE OF CALIFORNIA

THE STATE OF CALIFORNIA OR ITS OFFICERS OR AGENTS SHALL NOT BE RESPONSIBLE FOR THE ACCURACY OR COMPLETENESS OF ELECTRONIC COPIES OF THIS PLAN SHEET.

NOTES:

1. FOR DETAILS NOT SHOWN, SEE STANDARD PLAN D73.

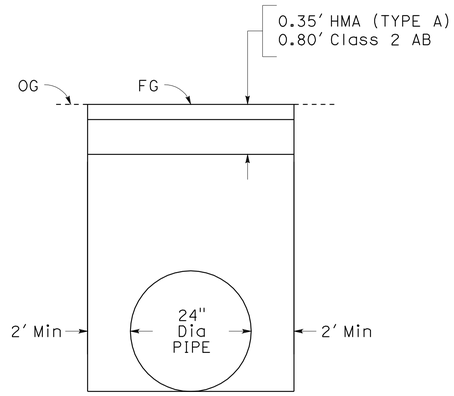

STRUCTURE BACKFILL UNDER EXISTING PAVEMENT

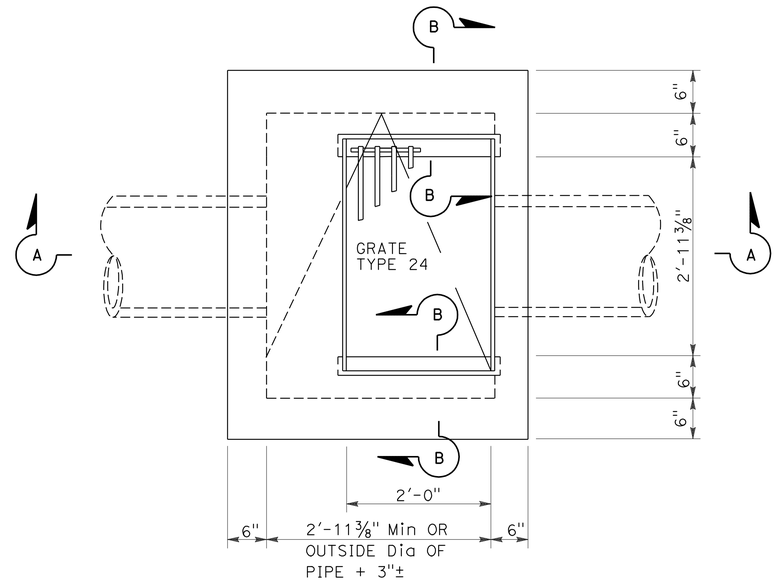

PLAN VIEW

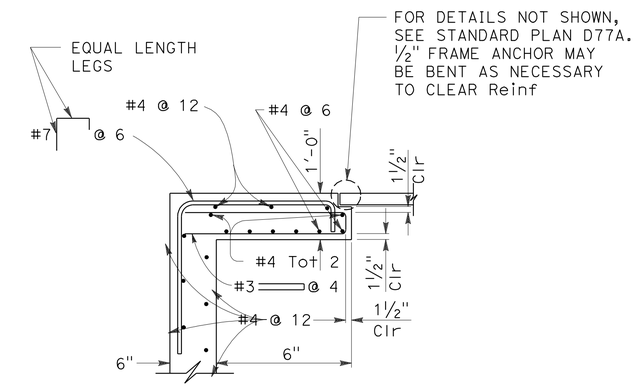

SECTION B-B

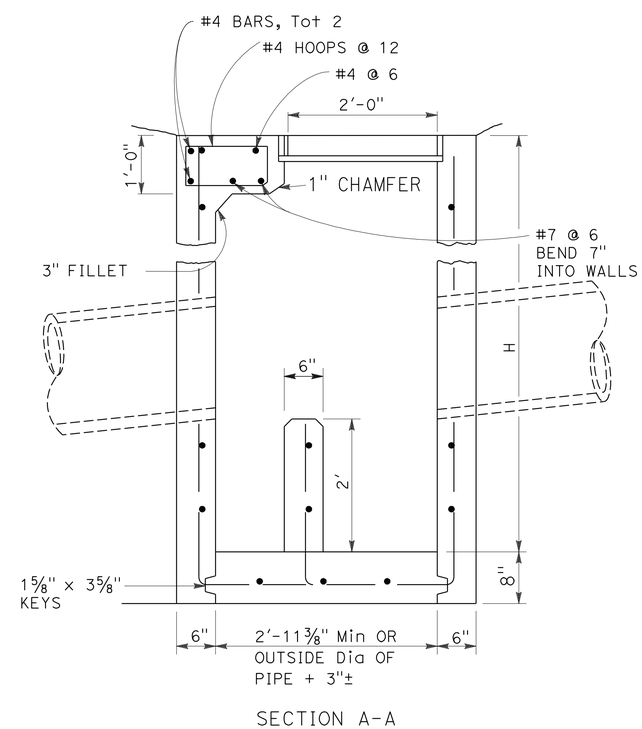

SECTION A-A

TYPE G2 (Mod) DI WITH SAND TRAP

DRAINAGE DETAILS

NO SCALE **DD-1**

REVISED BY	DATE REVISED

F. BATATAN — CALCULATED-DESIGNED BY
SARJU D. PATEL — CHECKED BY
ROBERT E. POLGAR — FUNCTIONAL SUPERVISOR

STATE OF CALIFORNIA - DEPARTMENT OF TRANSPORTATION
Caltrans **DESIGN**

LAST REVISION 08-01-08 | DATE PLOTTED => 21-JAN-2010 | TIME PLOTTED => 05:57

Dist	COUNTY	LOCATION CODE	POST MILES TOTAL PROJECT	SHEET No.	TOTAL SHEETS
03	Nev	5717		12	106

Sarju D. Patel 10/30/08
REGISTERED CIVIL ENGINEER DATE

1-26-09
PLANS APPROVAL DATE

REGISTERED PROFESSIONAL ENGINEER
SARJU D. PATEL
No. C 65611
Exp. 09-30-09
CIVIL
STATE OF CALIFORNIA

THE STATE OF CALIFORNIA OR ITS OFFICERS OR AGENTS SHALL NOT BE RESPONSIBLE FOR THE ACCURACY OR COMPLETENESS OF ELECTRONIC COPIES OF THIS PLAN SHEET.

NOTES:

1. ALL PIPE JOINTS ARE STANDARD JOINT TYPE.

APC ALLOWABLE PIPE MATERIAL AND PROTECTION

DESCRIPTION	TYPE		
	CSP (0.079 inch)*	RCP**	SSRP (0.064 inch)***
	SIZE (inch)	SIZE (inch)	SIZE (inch)
24" APC	24	24	24

* WITH POLYMERIC SHEET COATING.
** RCP 675 LB/CY MINIMUM: 75% TYPE II MOD. OR TYPE V, 25% MINERAL ADMIXTURE. MAXIMUM WATER-TO-CEMENTITIOUS MATERIAL RATIO OF 0.40. FOR MINIMUM ALLOWABLE CLASS OF RCP, SEE STANDARD PLAN A62D.
*** COMPOSITE STEEL SPIRAL RIB PIPE.

DRAINAGE QUANTITIES

PLAN SHEET No.	DRAINAGE PROFILE Sht No.	DRAINAGE SYSTEM No.	DRAINAGE UNIT No.	REMOVE INLET EA	REMOVE CULVERT EA	24 inch APC LF	HEIGHT OF INLET FT	MINOR CONCRETE (MINOR STRUCTURE) CY	MINOR CONCRETE (GUTTER) CY	Misc IRON & STEEL LB	HMA (TYPE A) * TON	(N) MAXIMUM COVER FT	DESCRIPTION	STATION ("B" LINE)	DRAINAGE UNIT No.	DRAINAGE SYSTEM No.	DRAINAGE PROFILE Sht No.	PLAN SHEET No.
D-1		1	a	1									REMOVE INLET	11+03.79 Lt	a	1		D-1
			b		1								REMOVE CULVERT (12" X 100.7')	11+04.47 Lt TO 12+03.00 Lt	b			
			c	1									REMOVE INLET	12+04.21 Lt	c			
	DP-1		d				3.50	1.44		239			G2 - DI WITH 24-12X GRATE	10+29.00	d		DP-1	
	DP-1		e			76						3.0	24" APC	10+29.00 TO 10+60.43 Lt	e		DP-1	
	DP-1		f				5.50	2.15		239			G2 (Mod) - DI WITH 24-12X GRATE	10+59.96 Lt	f		DP-1	
	DP-1		g			142					9.5	2.6	24" APC	10+61.91 Lt TO 12+02.49 Lt	g		DP-1	
	DP-1,2		h				5.30	2.09		239			G2 (Mod) - DI WITH 24-12X GRATE	12+03.48 Lt	h		DP-1,2	
	DP-2		i			58					5.5	1.6	24" APC	11+86.00 Lt TO 12+03.79 Lt	i		DP-2	
	DP-2		j				3.50	1.44		239			G2 - DI WITH 24-12X GRATE	11+86.00 Lt	j		DP-2	
D-1		1	k						3.27				MINOR CONCRETE (GUTTER)	10+62.41 Lt TO 11+33.12 Lt	k	1		D-1
			TOTAL	2	1	276		7.12	3.27	956	15.0							

* HMA TONNAGE QUANTITY INCLUDED IN THE ROADWAY QUANTITIES TABLE.
(N) - NOT A SEPARATE PAY ITEM, FOR INFORMATION ONLY.

DRAINAGE QUANTITIES
DQ-1

STATE OF CALIFORNIA - DEPARTMENT OF TRANSPORTATION
Caltrans
DESIGN
FUNCTIONAL SUPERVISOR: ROBERT E. POLGAR
CALCULATED-DESIGNED BY: F. BATATAN
CHECKED BY: SARJU D. PATEL
REVISED BY
DATE REVISED

LAST REVISION 08-01-08
DATE PLOTTED => 21-JAN-2010
TIME PLOTTED => 05:57

Dist	COUNTY	LOCATION CODE	POST MILES TOTAL PROJECT	SHEET No.	TOTAL SHEETS
03	Nev	5717		13	106

Sarju D. Patel 10/30/08
REGISTERED CIVIL ENGINEER DATE

1-26-09
PLANS APPROVAL DATE

REGISTERED PROFESSIONAL ENGINEER
SARJU D. PATEL
No. C 65611
Exp. 09-30-09
CIVIL
STATE OF CALIFORNIA

THE STATE OF CALIFORNIA OR ITS OFFICERS OR AGENTS SHALL NOT BE RESPONSIBLE FOR THE ACCURACY OR COMPLETENESS OF ELECTRONIC COPIES OF THIS PLAN SHEET.

NOTES:

1. LOCATIONS OF UTILITY FACILITIES SHOWN ON THESE PLANS ARE APPROXIMATE AND SHALL BE VERIFIED BY THE CONTRACTOR PRIOR TO CONSTRUCTION.
2. UTILITY OWNERSHIP ON THIS PROJECT:
   - ELECTRIC - PACIFIC GAS & ELECTRIC (PG&E Elect)
   - WATER - NEVADA IRRIGATION DISTRICT (NID WATER)
   - SEWER - NEVADA COUNTY DEPARTMENT OF SANITATION (Nev Co Swr)
   - NATURAL GAS - PACIFIC GAS & ELECTRIC (PG&E GAS)
   - TELEPHONE - AMERICAN TELEPHONE & TELEGRAPH (AT&T Tel)
   - FIBER OPTIC - AMERICAN TELEPHONE & TELEGRAPH (AT&T FO)
3. THIS PLAN ACCURATE FOR UTILITIES ONLY.
4. SEE STRUCTURE PLANS FOR SOURCE OF ELECTRIC AND TELEPHONE BEHIND THE EQUIPMENT BUILDING.
5. SEE SHEET U-2 AND STRUCTURE PLANS FOR SOURCE OF WATER AT THE SOUTHWEST END OF THE SITE.
6. SEE STRUCTURE PLANS FOR UTILITY CONNECTIONS AND DETAILS.
7. ALL UTILITY WORK IS INCLUDED AS PART OF "BUILDING WORK" PAY ITEM.

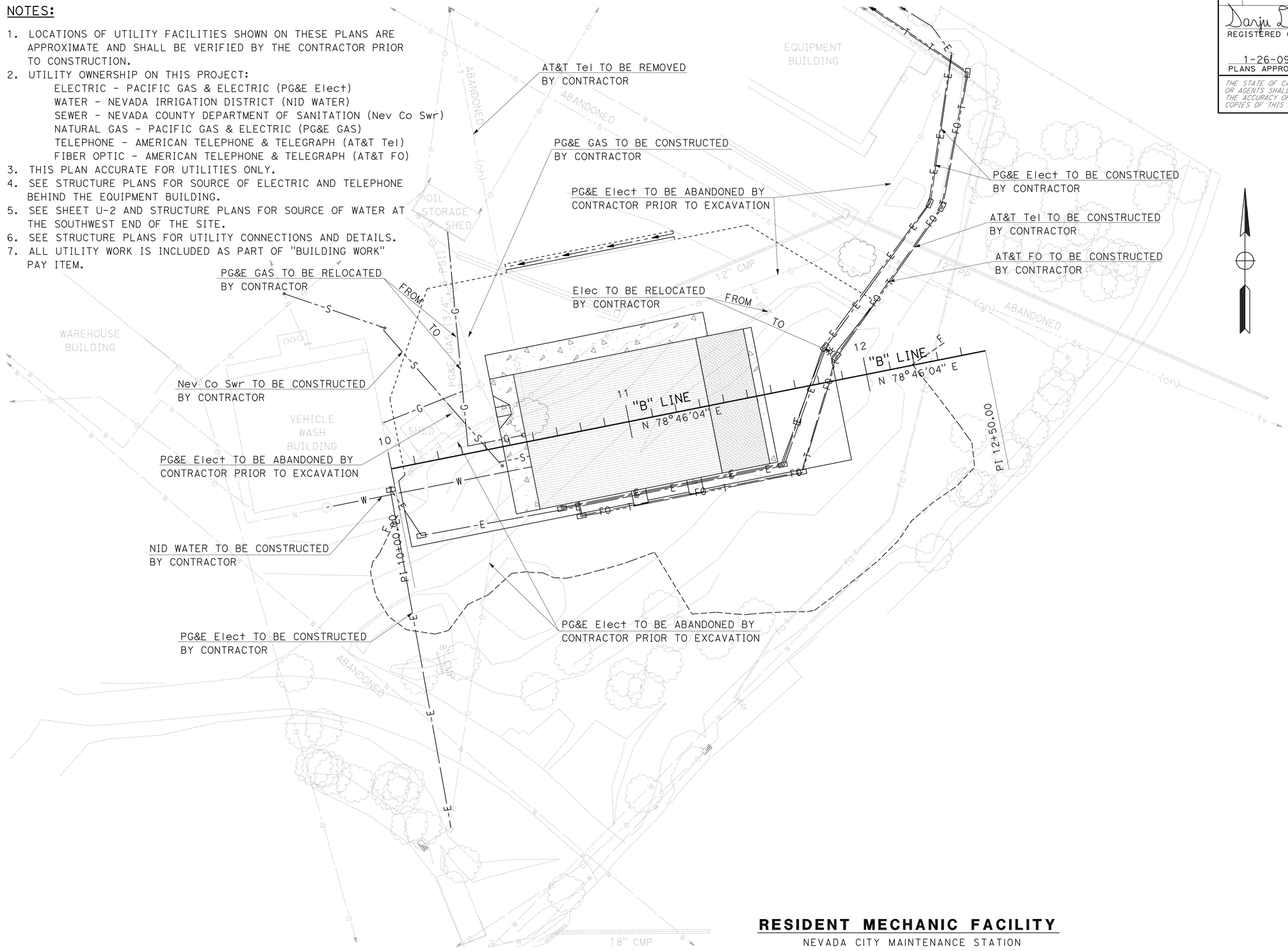

RESIDENT MECHANIC FACILITY
NEVADA CITY MAINTENANCE STATION

UTILITY PLAN

SCALE: 1"=20' **U-1**

STATE OF CALIFORNIA - DEPARTMENT OF TRANSPORTATION
Caltrans **DESIGN**

FUNCTIONAL SUPERVISOR: ROBERT E. POLGAR
CALCULATED-DESIGNED BY: F. BATATAN
CHECKED BY: SARJU D. PATEL
REVISED BY
DATE REVISED

LAST REVISION 08-01-08
DATE PLOTTED => 21-JAN-2010
TIME PLOTTED => 05:58

Dist	COUNTY	LOCATION CODE	POST MILES TOTAL PROJECT	SHEET No.	TOTAL SHEETS
03	Nev	5717		14	106

Sarju D. Patel 10/30/08
REGISTERED CIVIL ENGINEER DATE

1-26-09
PLANS APPROVAL DATE

REGISTERED PROFESSIONAL ENGINEER
SARJU D. PATEL
No. C 65611
Exp. 09-30-09
CIVIL
STATE OF CALIFORNIA

THE STATE OF CALIFORNIA OR ITS OFFICERS OR AGENTS SHALL NOT BE RESPONSIBLE FOR THE ACCURACY OR COMPLETENESS OF ELECTRONIC COPIES OF THIS PLAN SHEET.

NOTES:

1. LOCATIONS OF UTILITY FACILITIES SHOWN ON THESE PLANS ARE APPROXIMATE AND SHALL BE VERIFIED BY THE CONTRACTOR PRIOR TO CONSTRUCTION.
2. THIS PLAN ACCURATE FOR UTILITIES ONLY.
3. SEE SHEET U-1 AND STRUCTURE PLANS FOR ALL UTILITY CONNECTIONS AND DETAILS.
4. ALL UTILITY WORK IS INCLUDED AS PART OF "BUILDING WORK" PAY ITEM.

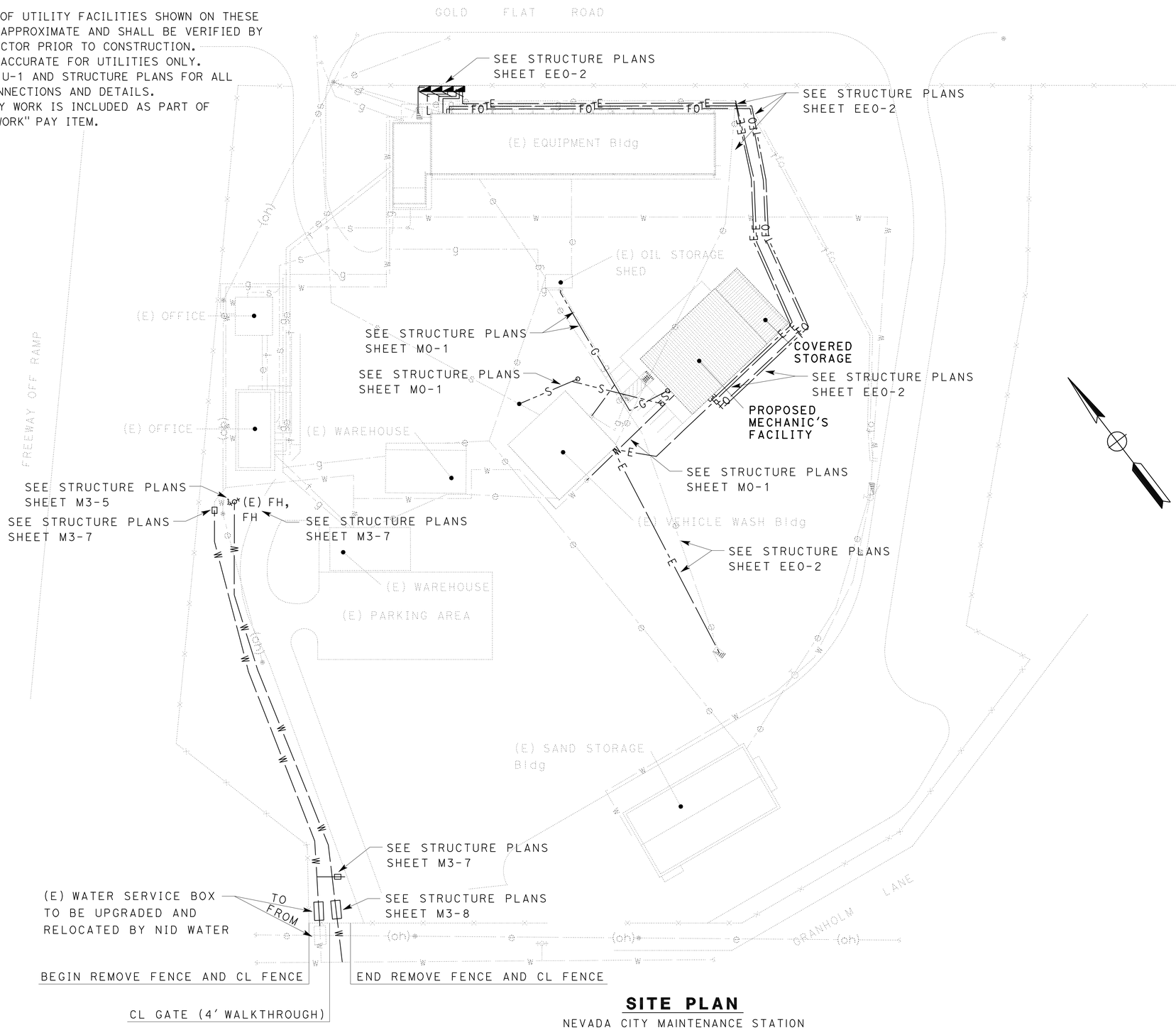

SITE PLAN

NEVADA CITY MAINTENANCE STATION

UTILITY PLAN

NO SCALE **U-2**

REVISED BY	DATE REVISED

CALCULATED-DESIGNED BY	CHECKED BY
F. BATATAN	SARJU D. PATEL

FUNCTIONAL SUPERVISOR: ROBERT E. POLGAR

STATE OF CALIFORNIA - DEPARTMENT OF TRANSPORTATION
Caltrans
DESIGN

LAST REVISION 08-01-08
DATE PLOTTED => 21-JAN-2010
TIME PLOTTED => 05:58

Dist	COUNTY	LOCATION CODE	POST MILES TOTAL PROJECT	SHEET No.	TOTAL SHEETS
03	Nev	5717		15	106

Sarju D. Patel 10/30/08
REGISTERED CIVIL ENGINEER DATE

1-26-09
PLANS APPROVAL DATE

REGISTERED PROFESSIONAL ENGINEER
SARJU D. PATEL
No. C 65611
Exp. 09-30-09
CIVIL
STATE OF CALIFORNIA

THE STATE OF CALIFORNIA OR ITS OFFICERS OR AGENTS SHALL NOT BE RESPONSIBLE FOR THE ACCURACY OR COMPLETENESS OF ELECTRONIC COPIES OF THIS PLAN SHEET.

ROADWAY QUANTITIES

STATION LIMITS ("B" LINE)	HOT MIX ASPHALT (TYPE A)	CLASS 2 AGGREGATE BASE	ROADWAY EXCAVATION	(N) EMBANKMENT	IMPORTED BORROW
	TON	CY			
9+83.23 TO 12+40.95	292	333	355	0	5100
HMA (TYPE A) FOR CULVERTS *	15				
PLACE HMA DIKE (TYPE D)	3				
MINOR Conc (Misc Const)		9			
TOTAL	310	342	355	0	5100

* SEE SHEET DQ-1 FOR QUANTITY TABLE.
(N) - NOT A SEPARATE PAY ITEM, FOR INFORMATION ONLY.

MINOR CONCRETE (MISCELLANEOUS CONSTRUCTION)

STATION LIMITS ("B" LINE)	MINOR Conc (Misc Const)
	CY
10+47.00 TO 11+57.00	5.3
TOTAL	5.3

PLACE HOT MIX ASPHALT DIKE (TYPE D)

STATION LIMITS ("B" LINE)	PLACE HMA DIKE (TYPE D) *
	LF
11+87.00	42.8
TOTAL	42.8

* HMA TONNAGE QUANTITY INCLUDED IN THE ROADWAY QUANTITIES TABLE.

FENCE AND GATE

ITEM DESCRIPTION	UNIT	QUANTITY
REMOVE FENCE	LF	30
CHAIN LINK FENCE	LF	26
CHAIN LINK GATE	EA	1

WATER POLLUTION CONTROL

STATION LIMITS ("B" LINE)	TEMPORARY SILT FENCE	TEMPORARY DI PROTECTION
	LF	EA
9+83.23 TO 12+40.95	425	4
TOTAL	425	4

EROSION CONTROL

STATION LIMITS ("B" LINE)	DUFF
	SQYD
9+83.23 TO 12+40.95	1280
TOTAL	1280

SUMMARY OF QUANTITIES

Q-1

REVISED BY | DATE REVISED
F. BATATAN | SARJU D. PATEL
CALCULATED-DESIGNED BY | CHECKED BY
FUNCTIONAL SUPERVISOR: ROBERT E. POLGAR
STATE OF CALIFORNIA - DEPARTMENT OF TRANSPORTATION
Caltrans DESIGN

LAST REVISION 08-01-08 | DATE PLOTTED => 21-JAN-2010 | TIME PLOTTED => 05:58

DIST	COUNTY	ROUTE	POST MILES TOTAL PROJECT	SHEET NO.	TOTAL SHEETS
03	Nev	5717		16	106

REGISTERED CIVIL ENGINEER

June 6, 2008
PLANS APPROVAL DATE

REGISTERED PROFESSIONAL ENGINEER
Donald E. Howe
No. C46402
Exp. 3-31-09
CIVIL
STATE OF CALIFORNIA

The State of California or its officers or agents shall not be responsible for the accuracy or completeness of electronic copies of this plan sheet.

To accompany plans dated 1-26-09

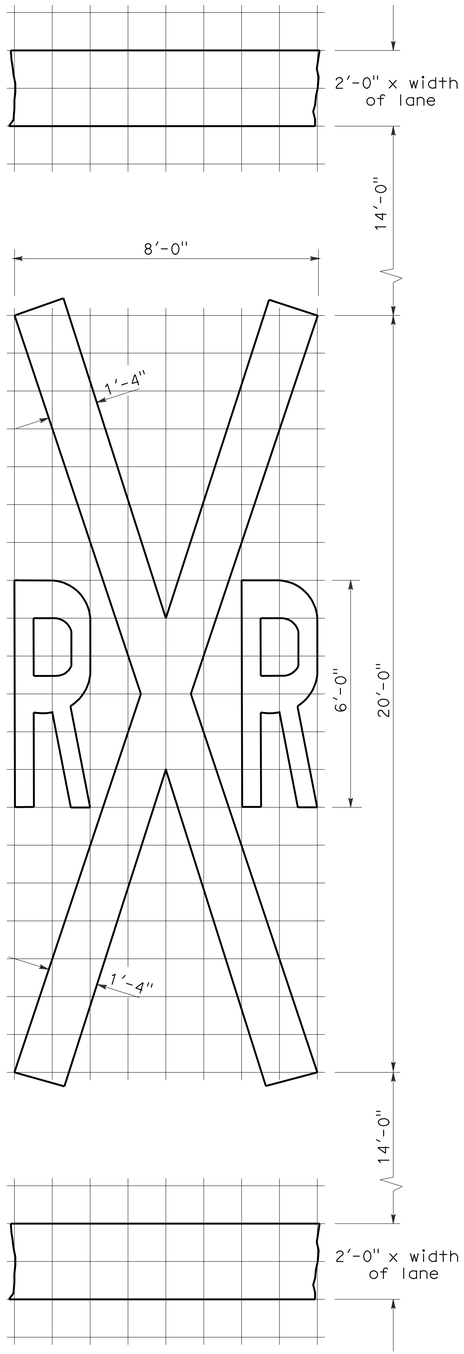

RAILROAD CROSSING SYMBOL

✳70 sq ft DOES NOT INCLUDE THE 2'-0" x VARIABLE WIDTH TRANSVERSE LINES.

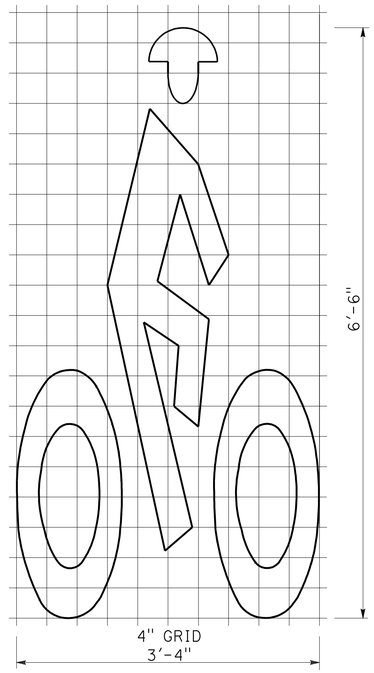

BIKE LANE SYMBOL

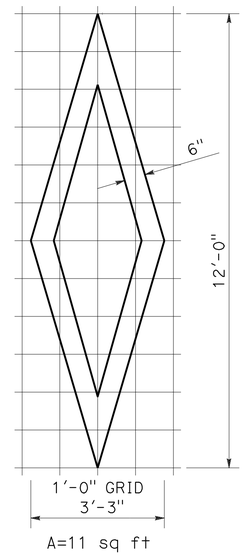

DIAMOND SYMBOL

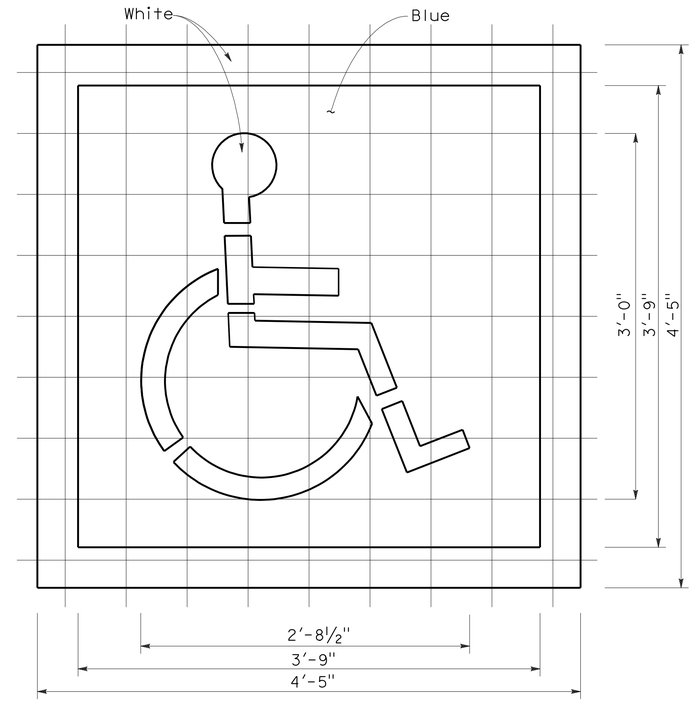

INTERNATIONAL SYMBOL OF ACCESSIBILITY MARKING

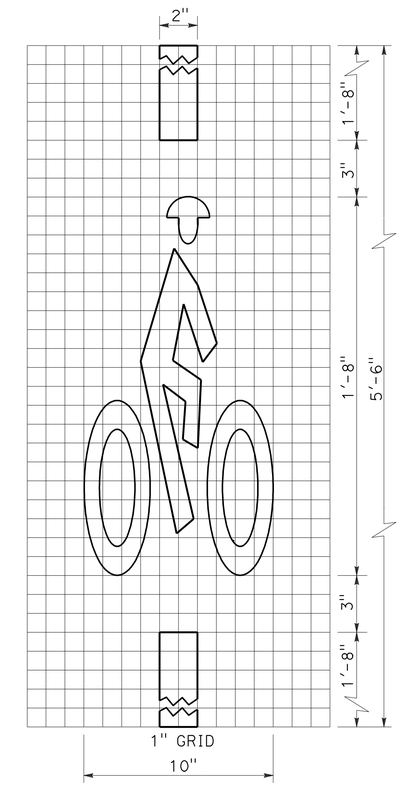

BICYCLE LOOP DETECTOR SYMBOL

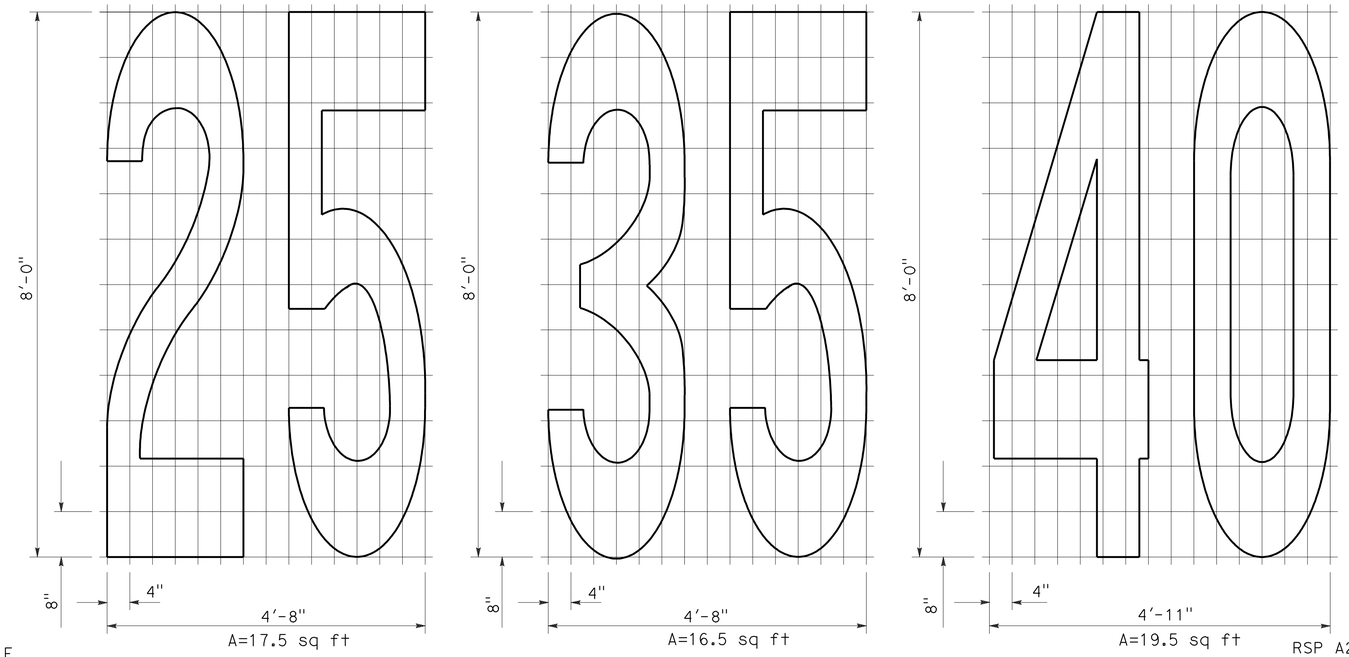

NUMERALS

NOTE:

1. Minor variations in dimensions may be accepted by the Engineer.

STATE OF CALIFORNIA
DEPARTMENT OF TRANSPORTATION

PAVEMENT MARKINGS SYMBOLS AND NUMERALS

NO SCALE

RSP A24C DATED JUNE 6, 2008 SUPERSEDES STANDARD PLAN A24C DATED MAY 1, 2006 - PAGE 11 OF THE STANDARD PLANS BOOK DATED MAY 2006.

REVISED STANDARD PLAN RSP A24C

2006 REVISED STANDARD PLAN RSP A24C

5-27-08

DIST	COUNTY	ROUTE	POST MILES TOTAL PROJECT	SHEET NO.	TOTAL SHEETS
03	Nev	5717		17	106

REGISTERED CIVIL ENGINEER

November 17, 2006
PLANS APPROVAL DATE

REGISTERED PROFESSIONAL ENGINEER Dallas Forester No. C37765 Exp. 12-31-06 CIVIL STATE OF CALIFORNIA

The State of California or its officers or agents shall not be responsible for the accuracy or completeness of electronic copies of this plan sheet.

To accompany plans dated 1-26-09

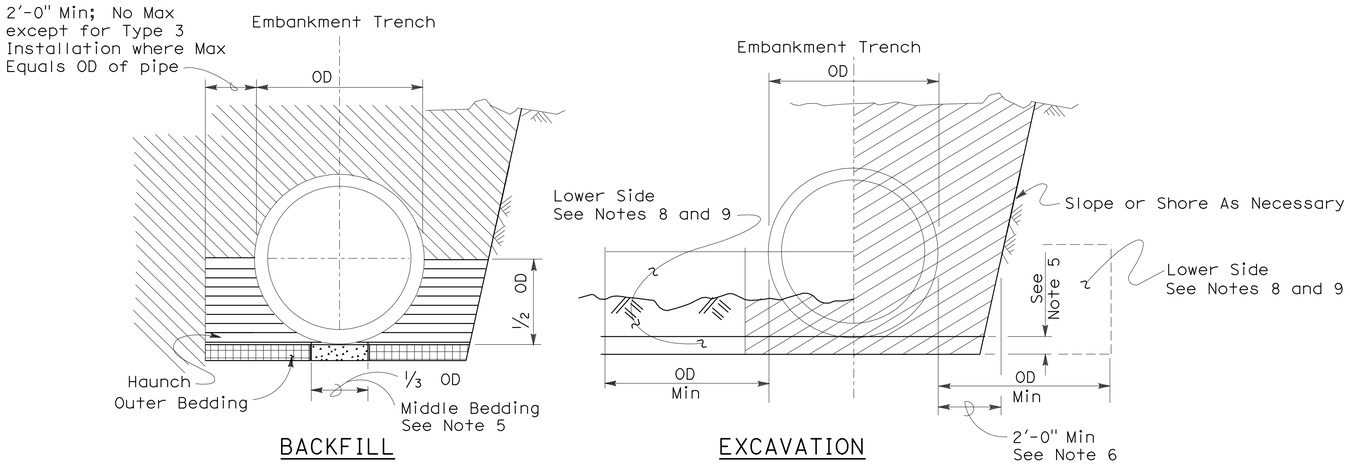

Roadway Embankment

Structure Backfill (Culvert) See Note 6

Structure Backfill (Culvert) See Note 6

Loose Backfill

Excavation Structure (Culvert)

TYPE 1 INSTALLATION:

The haunch and outer bedding shall be compacted to a minimum 90 percent relative compaction. In addition, the minimum sand equivalent in these areas shall be 30 and the maximum percentage passing the 75 μm sieve size shall be 12.

TYPE 2 INSTALLATION:

The haunch and outer bedding shall be compacted to a minimum 90 percent relative compaction. In addition, the minimum sand equivalent in these areas shall be 25.

TYPE 3 INSTALLATION:

The haunch and outer bedding shall be compacted to a minimum 85 percent relative compaction. 90 percent relative compaction will be required where the fill over the pipe is less than 4'-0" or 1/2 OD.

NOTES:

1. Unless otherwise shown on the plans or specified in the special provision, the Contractor shall have the option of selecting the class of RCP and the type of installation to be used, provided the height of cover does not exceed the value shown for the RCP selected.
   Example: 24" RCP culvert with maximum cover of 19'-0" the options are:
   a) Class III or stronger with Installation Type 1.
   b) Class III Special or stronger with Installation Type 2.
   c) Class IV Special or stronger with Installation Type 3.
   Cover is defined as the maximum vertical distance from top of the pipe to finished grade within the length of any given culvert.
2. The class of RCP and Installation Type selected shall be the same throughout the length of any given culvert.
3. The "length of any culvert" is defined as the culvert between:
   a) Successive drainage structure (inlets, junction boxes, headwalls, etc.).
   b) A drainage structure and the inlet or outlet end of the culvert.
   c) The inlet and outlet end of the culvert when there are no intervening drainage structures.
4. Oval and arch shaped RCP shall not be used.
5. 1/25 OD Min, not less than 3".
6. Slurry cement backfill may be substituted for backfill in the outer bedding and haunch areas. If slurry is used the outer and middle beddings shall be omitted. Prior to installation the soil under the middle 1/3 of the outside diameter of the pipe shall be softened by scarifying or other means to a minimum depth of 1/25 OD, but not less than 3". Where slurry cement backfill is used clear distance to trench wall may be reduced as set forth in Section 19-3.062 of the Standard Specifications.
7. Backfill shall be placed full width of excavation except where dimensions are shown for backfill width or thickness. Dimensions shown are minimums.
8. Lower side shall be suitable material as determined by the Engineer. Otherwise it shall be considered unsuitable as set forth in Section 19-2.02 of the Standard Specifications. See Note 9.
9. Where the pipe is placed in a trench, if the trench walls are sloped at 5 vertical to 1 horizontal or steeper for at least 90 percent of the trench height or up to not less than 12" from the grading plane, the firmness of the soil in the lower side need not be considered.
10. Non-reinforced precast concrete pipe sizes 3'-0" or smaller may be placed under installation Types 1, 2 or 3.

INSTALLATION TYPE 1

MINIMUM CLASS AND D-LOAD	COVER	
	108" Dia AND SMALLER	OVER 108" Dia
Class II 1000D	14.9'	12.9'
Class III 1350D	15.0' - 20.9'	13.0' - 18.9'
Class III Special 1700D	21.0' - 26.9'	19.0' - 24.9'
Class IV 2000D	27.0' - 31.9'	25.0' - 29.9'
Class IV Special 2500D	32.0' - 40.9'	30.0' - 38.9'
Class V 3000D	41.0' - 49.9'	39.0' - 46.9'
Class V Special 3600D	50.0' - 59.0'	47.0' - 58.0'

INSTALLATION TYPE 2

MINIMUM CLASS AND D-LOAD	COVER
Class II 1000D	9.9'
Class III 1350D	10.0'- 14.9'
Class III Special 1700D	15.0' - 19.9'
Class IV 2000D	20.0' - 24.9'
Class IV Special 2500D	25.0' - 31.9'
Class V 3000D	32.0' - 38.9'
Class V Special 3600D	39.0' - 47.0'

INSTALLATION TYPE 3

MINIMUM CLASS AND D-LOAD	COVER	
	48" Dia AND SMALLER	OVER 48" Dia
Class II 1000D	7.9'	5.9'
Class III 1350D	8.0' - 10.9'	6.0' - 8.9'
Class III Special 1700D	11.0' - 14.9'	9.0' - 12.9'
Class IV 2000D	15.0' - 17.9'	13.0' - 15.9'
Class IV Special 2500D	18.0' - 21.9'	16.0' - 19.9'
Class V 3000D	22.0' - 26.9'	20.0' - 24.9'
Class V Special 3600D	30.0' - 33.0'	25.0' - 31.0'

STATE OF CALIFORNIA
DEPARTMENT OF TRANSPORTATION

EXCAVATION AND BACKFILL CONCRETE PIPE CULVERTS

NO SCALE

RSP A62DA DATED NOVEMBER 17, 2006 SUPERSEDES STANDARD PLAN A62DA DATED MAY 1, 2006 - PAGE 20 OF THE STANDARD PLANS BOOK DATED MAY 2006.

REVISED STANDARD PLAN RSP A62DA

2006 REVISED STANDARD PLAN RSP A62DA

10-26-06

DIST	COUNTY	ROUTE	POST MILES TOTAL PROJECT	SHEET NO.	TOTAL SHEETS
03	Nev	5717		18	106

REGISTERED CIVIL ENGINEER

November 17, 2006
PLANS APPROVAL DATE

REGISTERED PROFESSIONAL ENGINEER Michael Janzen No. 44788 Exp. 03-31-08 CIVIL STATE OF CALIFORNIA

The State of California or its officers or agents shall not be responsible for the accuracy or completeness of electronic copies of this plan sheet.

To accompany plans dated 1-26-09

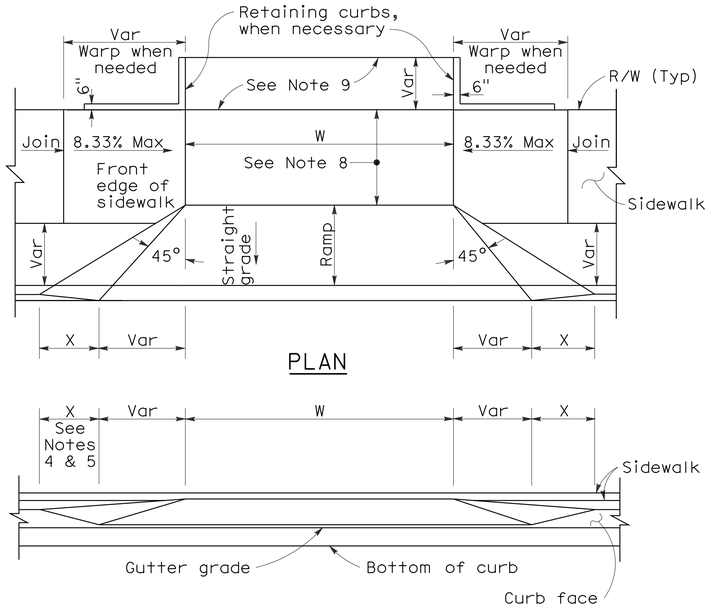

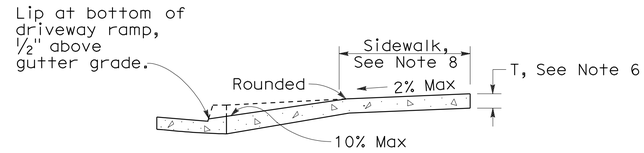

CASE A

Typical driveway, sidewalk not depressed

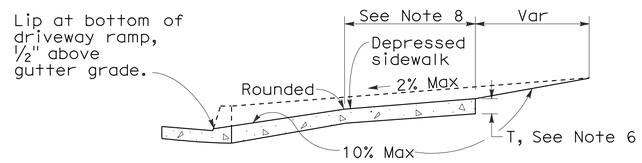

CASE B

Driveway with depressed sidewalk

SECTIONS

DRIVEWAYS

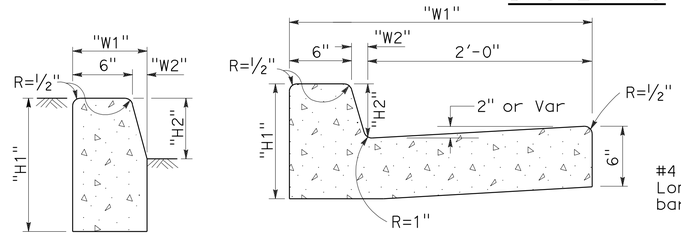

TYPE A1 CURBS

See Table A

TYPE A2 CURBS

See Table A

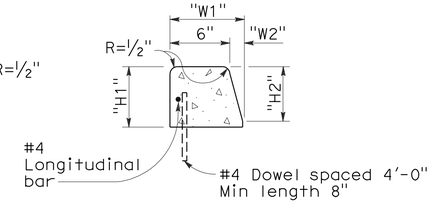

TYPE A3 CURBS

Superimposed on existing pavement
See Table A

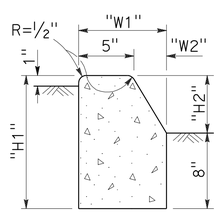

TYPE B1 CURBS

See Table A

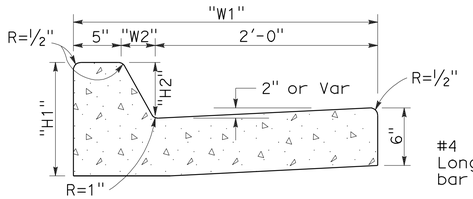

TYPE B2 CURBS

See Table A

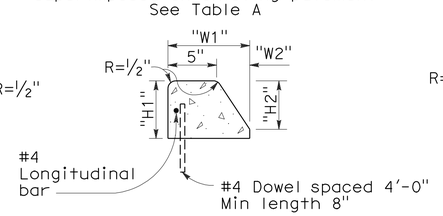

TYPE B3 CURBS

Superimposed on existing pavement
See Table A

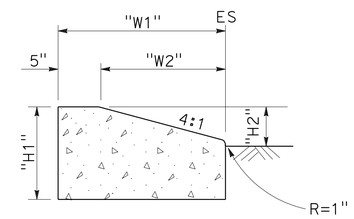

TYPE D CURBS

See Table A

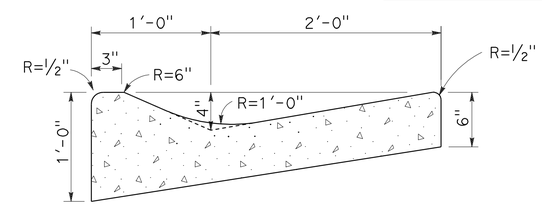

TYPE E CURB

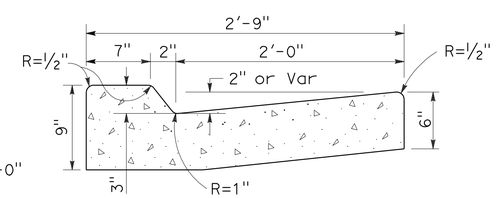

TYPE B4 CURBS

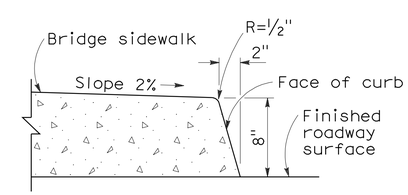

TYPE H CURB

On Bridges

CURBS

CURB QUANTITIES

TYPE	CUBIC YARDS PER LINEAR FOOT
A1-6	0.02585
A1-8	0.03084
A2-6	0.05903
A2-8	0.06379
A3-6	0.01036
A3-8	0.01435
B1-4	0.02185
B1-6	0.02930
B2-4	0.05515
B2-6	0.06171
B3-4	0.00641
B3-6	0.01074
B4	0.05709
D-4	0.04083
D-6	0.06804
E	0.06661

TABLE A

CURB TYPE	DIMENSIONS "H1"	"H2"	"W1"	"W2"
A1-6	1'-2"	6"	7½"	1½"
A1-8	1'-4"	8"	8"	2"
A2-6	1'-0"	6"	2'-7½"	1½"
A2-8	1'-2"	8"	2'-8"	2"
A3-6	6"	5"	7¼"	1¼"
A3-8	8"	7"	7¾"	1¾"
B1-4	1'-0"	4"	7½"	2½"
B1-6	1'-2"	6"	9"	4"
B2-4	10"	4"	2'-7½"	2½"
B2-6	1'-0"	6"	2'-9"	4"
B3-4	4"	3"	7"	2"
B3-6	6"	5"	8½"	3½"
D-4	10"	4"	1'-6"	1'-1"
D-6	1'-0"	6"	2'-2"	1'-8"

NOTES:

1. Case A driveway section typically applies.
2. Use Case B driveway section when ramp slopes would exceed 10% in Case A.
3. Use Case B driveway section when sidewalk cross slope would exceed 2% in Case A.
4. X=3'-0" except for curb heights over 10" where 4:1 slopes shall be used on curb slope.
5. X is a variable when sidewalk is located where wheelchairs may traverse the surface. Slopes shall not exceed 8.33%.
6. Sidewalk and ramp thickness "T" at driveway shall be 4" for residental and 6" for commercial.
7. Difference in slope of the driveway ramp and the slope of a line between the gutter and a point on the roadway 5'-0" from gutter line shall not exceed 15%. Reduce driveway ramp slope, not gutter slope, where required.
8. Minimum width of clear passageway for sidewalk shall be 4'-0".
9. Retaining curbs and acquisition of construction easement may be necessary for narrow sidewalks or curb heights in excess of 6".
10. Across the pedestrian route at curb ramp locations, the gutter pan slope shall not exceed 1" of depth for each 2'-0" of width.

STATE OF CALIFORNIA
DEPARTMENT OF TRANSPORTATION

CURBS AND DRIVEWAYS

NO SCALE

RSP A87A DATED NOVEMBER 17, 2006 SUPERSEDES STANDARD PLAN A87A DATED MAY 1, 2006 - PAGE 113 OF THE STANDARD PLANS BOOK DATED MAY 2006.

REVISED STANDARD PLAN RSP A87A

2006 REVISED STANDARD PLAN RSP A87A

10-25-06

DIST	COUNTY	ROUTE	POST MILES TOTAL PROJECT	SHEET NO.	TOTAL SHEETS
03	Nev	5717		19	106

REGISTERED CIVIL ENGINEER

September 1, 2006
PLANS APPROVAL DATE

REGISTERED PROFESSIONAL ENGINEER Hector David Cordova No. C41957 Exp. 3-31-08 CIVIL STATE OF CALIFORNIA

The State of California or its officers or agents shall not be responsible for the accuracy or completeness of electronic copies of this plan sheet.

To accompany plans dated 1-26-09

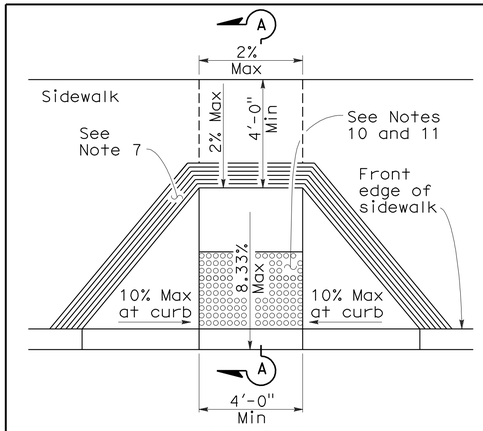

CASE A

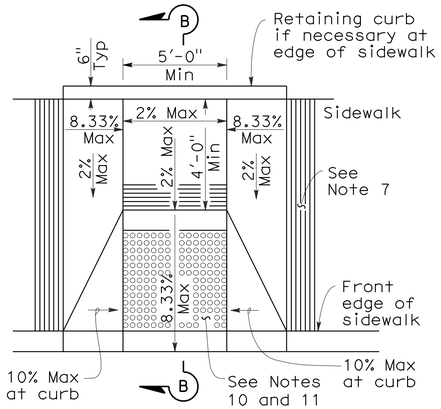

CASE B

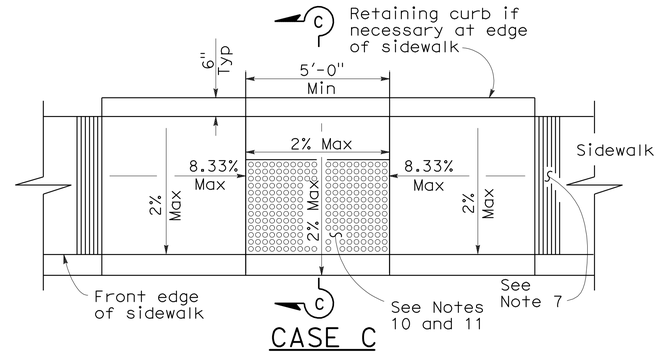

CASE C

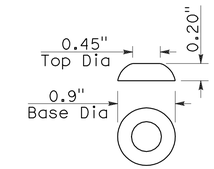

RAISED TRUNCATED DOME

CASE D

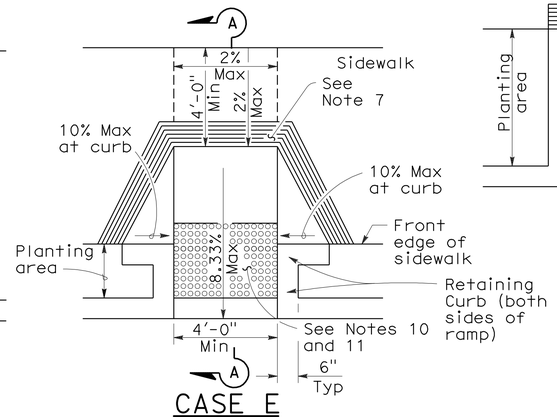

CASE E

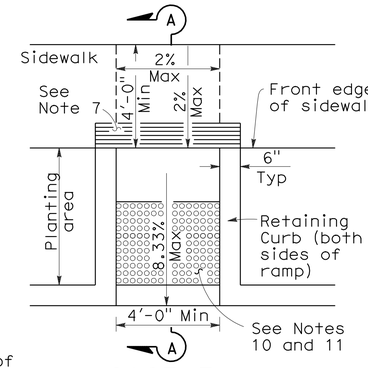

CASE F

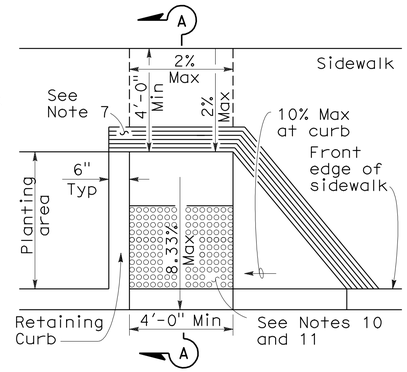

CASE G

See Note 4

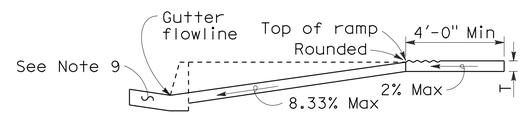

SECTION A-A

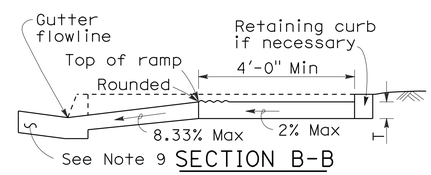

SECTION B-B

Depress entire sidewalk as required

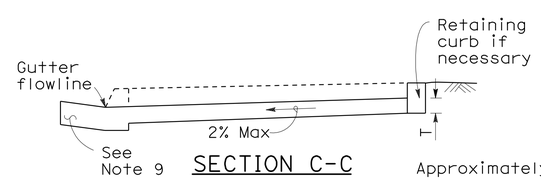

SECTION C-C

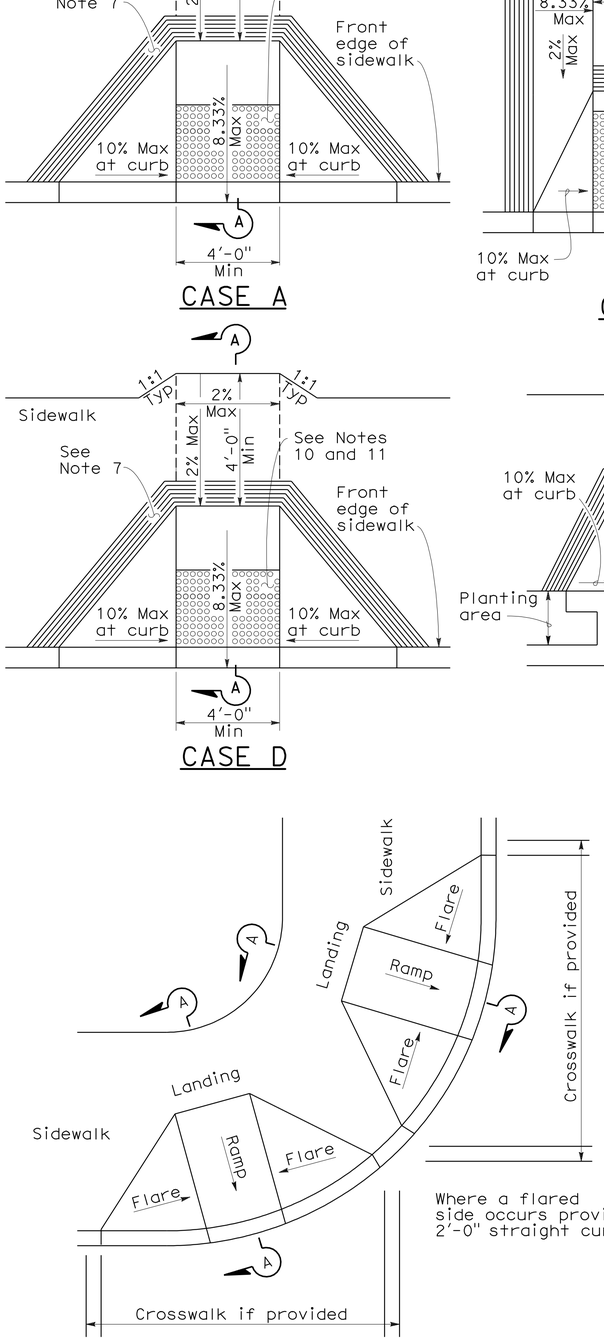

DETAIL A

TYPICAL TWO-RAMP CORNER INSTALLATION

See Note 1

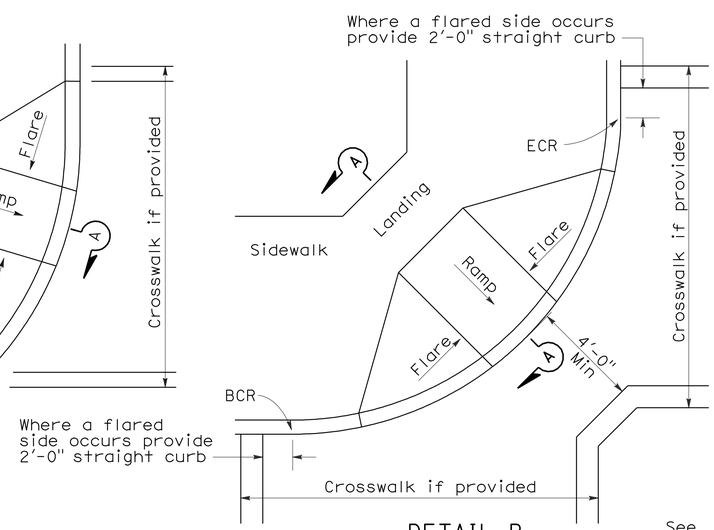

DETAIL B

TYPICAL ONE-RAMP CORNER INSTALLATION

See Notes 1 and 3

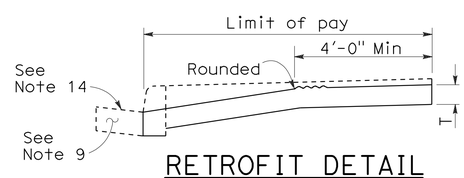

RETROFIT DETAIL

Existing curb and sidewalk

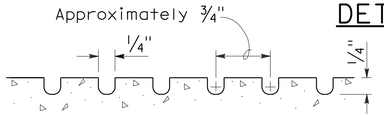

GROOVING DETAIL

NOTES:

1. As site conditions dictate, Case A through Case G curb ramps may be used for corner installations similar to those shown in Detail A and Detail B. The case of curb ramps used in Detail A do not have to be the same. Case A through Case G curb ramps also may be used at mid block locations, as site conditions dictate.
2. If distance from curb to back of sidewalk is too short to accommodate ramp and 4'-0" platform (landing) as shown in Case A, the sidewalk may be depressed longitudinally as in Case B, or C or may be widened as in Case D.
3. When ramp is located in center of curb return, crosswalk configuration must be similar to that shown for Detail B.
4. As site conditions dictate, the retaining curb side and the flared side of the Case G ramp shall be constructed in reversed position.
5. If located on a curve, the sides of the ramp need not be parallel, but the minimum width of the ramp shall be 4'-0".
6. Side slope of ramp flares vary uniformly from a maximum of 10% at curb to conform with longitudinal sidewalk slope adjacent to top of the ramp, except in Case C and Case F.
7. The curb ramp shall be outlined, as shown, with a 1'-0" wide border with 1/4" grooves approximately 3/4" on center. See grooving detail.
8. Transitions from ramps and landing to walks, gutters or streets shall be flush and free of abrupt changes.
9. Maximum slopes of adjoining gutters, the road surface immediately adjacent to the curb ramp or accessible route shall not exceed 5 percent within 4'-0" of the top and bottom of the curb ramp.
10. Curb ramps shall have a detectable warning surface that extends the full width and 3'-0" depth of the ramp. Detectable Warning Surfaces shall conform to the details on this plan and the requirements in the Special Provisions.
11. The edge of the detectable warning surface nearest the street shall be between 6" and 8" from the gutter flowline.
12. Sidewalk and ramp thickness, "T", shall be 3 1/2" minimum.
13. Utility pull boxes, manholes, vaults and all other utility facilities within the boundaries of the curb ramp will be relocated or adjusted to grade by the owner prior to, or in conjunction with, curb ramp construction.
14. For retrofit conditions, removal and replacement of curb apron will be at the Contractor's option, unless otherwise shown on project plans.

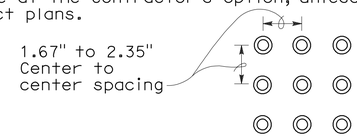

RAISED TRUNCATED DOME PATTERN (IN-LINE)

DETECTABLE WARNING SURFACE

See Note 10

STATE OF CALIFORNIA
DEPARTMENT OF TRANSPORTATION

CURB RAMP DETAILS

NO SCALE

RSP A88A DATED SEPTEMBER 1, 2006 SUPERSEDES STANDARD PLAN A88A DATED MAY 1, 2006 - PAGE 115 OF THE STANDARD PLANS BOOK DATED MAY 2006.

REVISED STANDARD PLAN RSP A88A

2006 REVISED STANDARD PLAN RSP A88A

8-3-06

DIST	COUNTY	ROUTE	POST MILES TOTAL PROJECT	SHEET NO.	TOTAL SHEETS
03	Nev	5717		20	106

REGISTERED CIVIL ENGINEER

June 6, 2008
PLANS APPROVAL DATE

REGISTERED PROFESSIONAL ENGINEER Hector David Cordova No. C41957 Exp. 3-31-10 CIVIL STATE OF CALIFORNIA

The State of California or its officers or agents shall not be responsible for the accuracy or completeness of electronic copies of this plan sheet.

To accompany plans dated 1-26-09

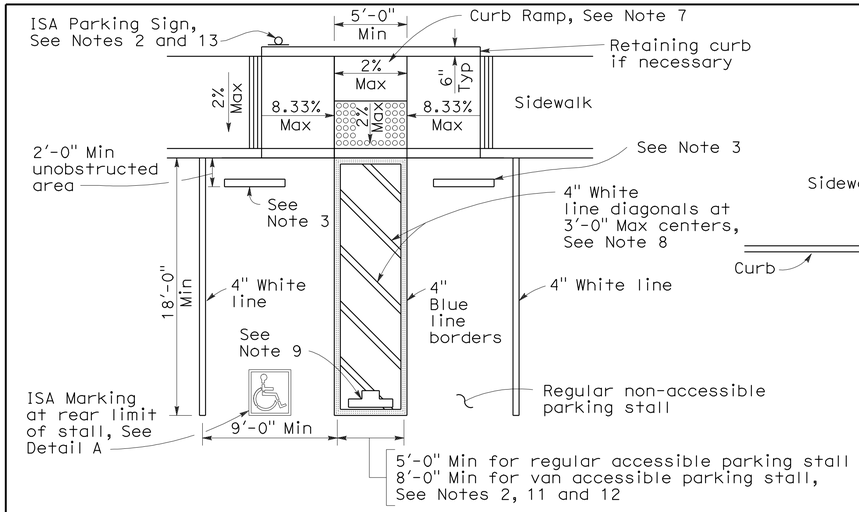

SINGLE PARKING STALL

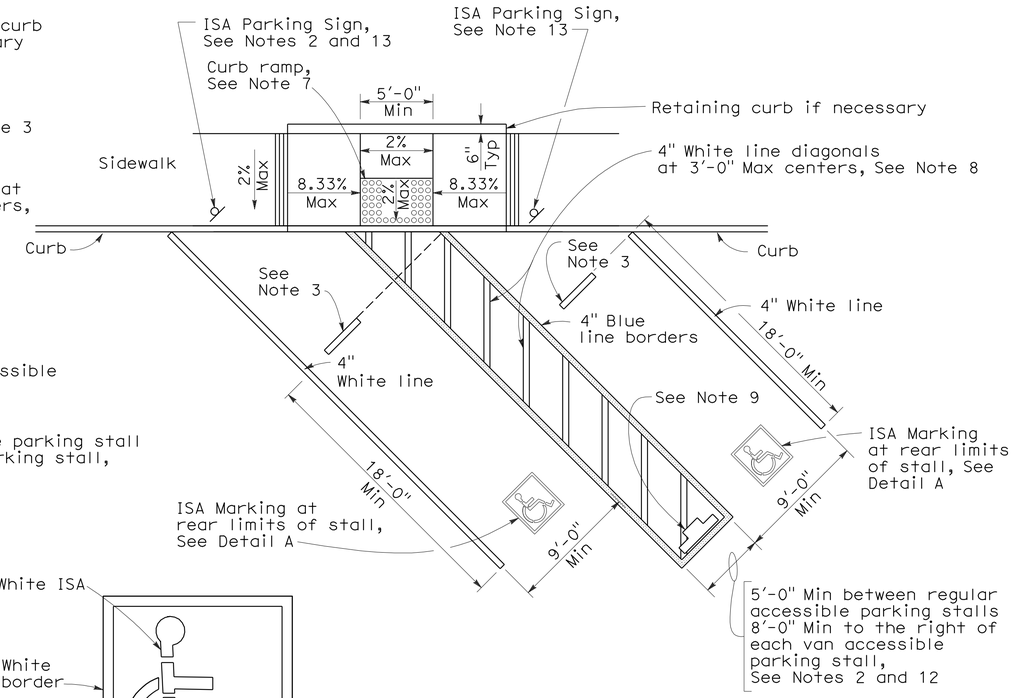

DIAGONAL DOUBLE PARKING STALLS

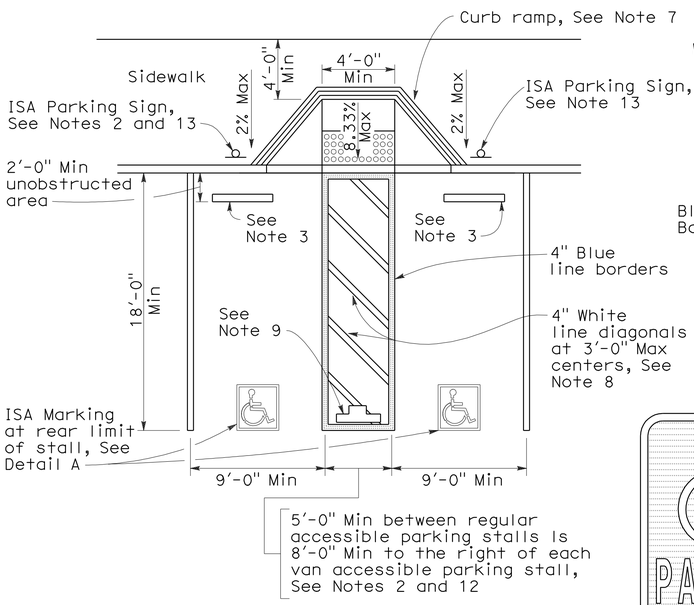

DOUBLE PARKING STALL

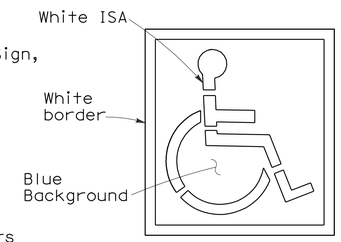

ISA MARKING
See Revised Std Plan RSP A24C

DETAIL A

TABLE A

Total Number of Parking Spaces or Stalls	Minimum Number of Disabled Accessible Parking Spaces or Stalls
1-25	1
26-50	2
51-75	3
76-100	4
101-150	5
151-200	6
201-300	7
301-400	8
401-500	9
501-1000	2 percent of total
Greater than 1001	20 plus 1 for each 100 or fraction thereof over 1001

SIGN R99 (CA)

PLAQUE R99B (CA)

SIGN R99 (CA) with PLAQUE R99B (CA)
See Note 6

SIGN R99C (CA)
See Note 6

SIGN R100B (CA)
See Note 10

SIGN R7-8b
See Notes 2 and 6

OFF-STREET PARKING SIGNS
(Parking lot or garage)
See Note 6

ISA = International Symbol of Accessibility

NOTES:

1. Accessible parking spaces serving a particular building shall be located on the shortest accessible route of travel from adjacent parking to an accessible entrance. In parking facilities that do not serve a particular building, accessible parking shall be located on the shortest accessible route of travel to an accessible pedestrian entrance of the parking facility.
2. One in every eight accessible off-street parking stalls, but not less than one, shall be served by an accessible aisle of 8'-0" minimum width and shall be signed van accessible. The R7-8b sign shall be mounted below the R99B (CA) plaque or the R99C (CA) sign.
3. In each parking stall, a curb or bumper shall be provided and located to prevent encroachment of vehicles over the required width of walkways. Parking stalls shall be so located that persons with disabilities are not compelled to wheel or walk behind parked cars other than their own.
4. Surface slopes of accessible off-street parking stalls shall be the minimum possible and shall not exceed 2 percent in any direction.
5. Table A shall be used to determine the required number of accessible parking stalls in each parking lot or garage.
6. Where Plaque R99B (CA), Sign R99C (CA) or Sign R7-8b are installed, the bottom of the sign or plaque panel shall be a minimum of 7'-0" above the surrounding surface.
7. Curb ramps shall conform to the details shown on Revised Standard Plan RSP A88A.
8. Blue paint, instead of white may be used for marking accessibility aisles in areas where snow may cause white markings to not be visible.
9. The words "NO PARKING", shall be painted in white letters no less than 1'-0" high and located so that it is visible to traffic enforcement officials. See Revised Standard Plan RSP A90B for details of the "NO PARKING" pavement marking.
10. A R100B (CA) sign shall be posted in a conspicuous place at each entrance to off-street parking facilities or immediately adjacent to and visible from each stall. The sign shall include the address where the towed vehicle may be reclaimed and the telephone number of the local traffic law enforcement agency.
11. Where a single (non-van) accessible parking space is provided, the loading and unloading access aisle shall be on the passenger side of the vehicle as the vehicle is going forward into the parking space.
12. Where a van accessible parking space is provided, the loading and unloading access aisle shall be 8'-0" wide minimum, and shall be on the passenger side of the vehicle as the vehicle is going forward into the parking space.
13. Accessible Parking Only Sign shall be Sign R99C (CA) or Sign R99 (CA) with Plaque R99B (CA).

STATE OF CALIFORNIA
DEPARTMENT OF TRANSPORTATION

ACCESSIBLE PARKING OFF-STREET

NO SCALE

RSP A90A DATED JUNE 6, 2008 SUPERSEDES STANDARD PLAN A90A
DATED MAY 1, 2006 - PAGE 117 OF THE STANDARD PLANS BOOK DATED MAY 2006.

REVISED STANDARD PLAN RSP A90A

2006 REVISED STANDARD PLAN RSP A90A

6-3-08

DIST	COUNTY	ROUTE	POST MILES TOTAL PROJECT	SHEET NO.	TOTAL SHEETS
03	Nev	5717		21	106

Raymond Don Tsztoo
REGISTERED CIVIL ENGINEER

June 6, 2008
PLANS APPROVAL DATE

REGISTERED PROFESSIONAL ENGINEER
Raymond Don Tsztoo
No. C37332
Exp. 6-30-08
CIVIL
STATE OF CALIFORNIA

The State of California or its officers or agents shall not be responsible for the accuracy or completeness of electronic copies of this plan sheet.

To accompany plans dated 1-26-09

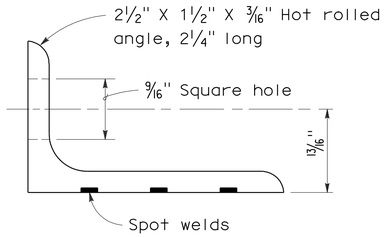

ANGLE

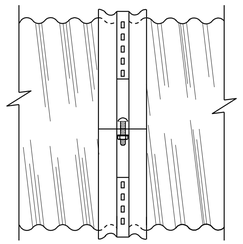

SIDE VIEW
ANGLE

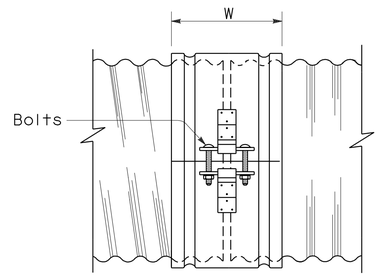

SIDE VIEW
SINGLE BAR AND STRAP

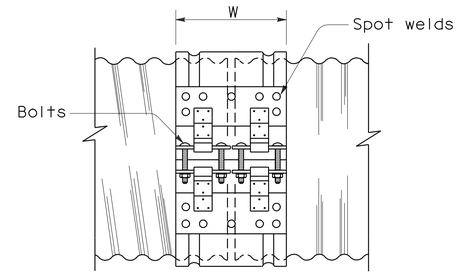

SIDE VIEW
DOUBLE BAR AND STRAP

NOTES:

1. All ferrous metal coupling band connection hardware shall be galvanized or electroplated in accordance with the Standard Specifications.
2. Dimensions and thicknesses shown are minimum.
3. Spot welds shall develop minimum required strength of strap.
4. Fillet welds of equivalent strength may be substituted for spot welds or rivets.
5. Dimension depends upon whether end condition is lips up or lips down.

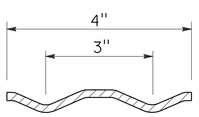

SECTION

H-4 HUGGER BAND

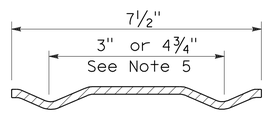

SECTION

H-7 HUGGER BAND

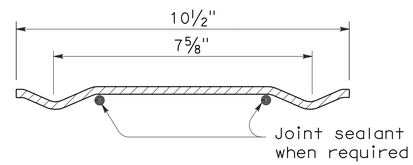

SECTION

H-10 HUGGER BAND

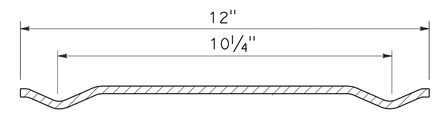

SECTION

H-12 HUGGER BAND

HUGGER COUPLING BANDS

STATE OF CALIFORNIA
DEPARTMENT OF TRANSPORTATION

CORRUGATED METAL PIPE COUPLING DETAILS No. 4 HUGGER COUPLING BANDS

NO SCALE

RSP D97D DATED JUNE 6, 2008 SUPERSEDES STANDARD PLAN D97D
DATED MAY 1, 2006 - PAGE 186 OF THE STANDARD PLANS BOOK DATED MAY 2006.

REVISED STANDARD PLAN RSP D97D

2006 REVISED STANDARD PLAN RSP D97D

3-24-08

DIST	COUNTY	ROUTE	POST MILES TOTAL PROJECT	SHEET NO.	TOTAL SHEETS
03	Nev	5717		22	106

Raymond Don Tsztoo
REGISTERED CIVIL ENGINEER

June 6, 2008
PLANS APPROVAL DATE

REGISTERED PROFESSIONAL ENGINEER
Raymond Don Tsztoo
No. C37332
Exp. 6-30-08
CIVIL
STATE OF CALIFORNIA

The State of California or its officers or agents shall not be responsible for the accuracy or completeness of electronic copies of this plan sheet.

ANNULAR AND HELICAL PROFILE

COUPLING TYPE	PIPE CORRUGATION	PIPE SIZE	W OR A	PIPE WALL THICKNESS CSP	PIPE WALL THICKNESS CAP	BAND THICKNESS CSP	BAND THICKNESS CAP	BAR AND STRAP (CSP ONLY) STRAP THICKNESS	BOLTS Dia	BAR Dia	BAR YIELD STRENGTH	ANGLE DIMENSIONS CSP	ANGLE DIMENSIONS CAP	BOLTS (No.- Dia) CSP	BOLTS (No.- Dia) CAP	RIVETS ANGLE TO BAND CSP	RIVETS ANGLE TO BAND CAP	SPOT WELDS ANGLE TO BAND CSP
TWO PIECE INTEGRAL FLANGE	1½′ × ¼"	6"-10"	7"	0.052"-0.079"	0.048"-0.060"	0.052"	0.060"							2-⅜"	2-⅜"			
		12"-18"	7"	0.052"-0.079"		0.064"								2-½"				
	2⅔" × ½"	12"-24"	7"	0.052"-0.079"	0.060"-0.105"	0.064"	0.060"							2-½"	2-½"			
UNIVERSAL	2⅔" × ½"	THROUGH 36"	12"	0.052"-0.138"	0.060"-0.135"	0.052"	0.060"					2" × 2" × 3/16"	2" × 2" × 3/16"	3-½"	3-½"	3-⅜"	3-⅜"	3-½"
		42"-60"	12"	0.052"-0.168"	0.075"-0.164"	0.052"	0.060"					2" × 2" × 3/16"	2" × 2" × 3/16"	3-½"	3-½"	3-⅜"	3-⅜"	5-½"
		THROUGH 72"	12"	0.052"-0.168"	0.164"	0.052"	0.105"	0.079"	½"	⅞"	32 ksi	2" × 2" × 3/16"	2" × 2" × 3/16"	3-½"	3-½"	3-⅜"	3-⅜"	5-½"
		78"-84"	16¼"	0.168"		0.079"		DOUBLE 0.079"	½"	⅞"	32 ksi							
ANNULAR	2⅔" × ½"	THROUGH 36"	7"	0.064"-0.138"	0.060"-0.135"	0.052"	0.060"	0.079"	½"	⅞"	32 ksi	2" × 2" × 3/16"	2" × 2" × 3/16"	2-½"	2-½"	3-⅜"	3-⅜"	3-½"
		42"-72"	12"	0.064"-0.168"	0.075"-0.164"	0.052"	0.105"	0.079"	½"	⅞"	32 ksi	2" × 2" × 3/16"	2" × 2" × 3/16"	3-½"	3-½"	3-⅜"	3-⅜"	5-½"
		78"-84"	12"	0.168"		0.079"		0.109"	½"	⅞"	45 ksi	2" × 2" × 3/16"		3-½"		3-⅜"		5-½"
	3" × 1"	48"-90"	14"	0.064"-0.109"		0.052"		0.079"	½"	⅞"	32 ksi	2" × 2" × 3/16"		3-½"		3-⅜"		5-½"
		96"-120"	14"	0.079"-0.109"		0.052"		0.109"	½"	⅞"	45 ksi	2" × 2" × 3/16"		3-½"		4-⅜"		
		42"-108"	14"		0.060"-0.135"		0.060"						2" × 2" × 3/16"		3-½"		3-⅜"	
HELICAL	2⅔" × ½"	THROUGH 36"	12"	0.052"-0.138"	0.060"-0.135"	0.052"	0.060"	0.079"	½"	⅞"	32 ksi	2" × 2" × 3/16"	2" × 2" × 3/16"	3-½"	3-½"	3-⅜"	3-⅜"	3-½"
		42"-72"	12"	0.052"-0.168"	0.075"-0.164"	0.052"	0.060"	0.079"	½"	⅞"	32 ksi	2" × 2" × 3/16"	2" × 2" × 3/16"	3-½"	3-½"	3-⅜"	3-⅜"	5-½"
		78"-84"	12"	0.168"		0.079"		0.109"	½"	⅞"	45 ksi	2" × 2" × 3/16"		3-½"		3-⅜"		5-½"
	3" × 1"	48"-90"	14"	0.064"-0.109"		0.052"		0.079"	½"	⅞"	32 ksi	2" × 2" × 3/16"		3-½"		3-⅜"		5-½"
		96"-120"	14"	0.079"-0.109"		0.052"		0.109"	½"	⅞"	45 ksi	2" × 2" × 3/16"		3-½"		4-⅜"		
		42"-108"	14"		0.060"-0.135"		0.060"						2" × 2" × 3/16"		3-½"		3-⅜"	
HUGGER	2⅔" × ½" REROLLED END	12"-54"	4"	0.052"-0.109"		0.052"						2½" × 1½" × 3/16"	2½" × 1½" × 3/16"	1-½"				3-½"
		60"-66"	4"	0.109"		0.064"						2½" × 1½" × 3/16"	2½" × 1½" × 3/16"	1-½"				3-½"
		36"-48"	4"	0.138"		0.064"						2½" × 1½" × 3/16"	2½" × 1½" × 3/16"	1-½"				3-½"
		THROUGH 72"	10½"	0.052"-0.168"		0.052"		0.079"	½"	⅞"	32 ksi							
		78"-84"	10½"	0.168"		0.079"		0.109"	½"	⅞"	45 ksi							
	3" × 1" REROLLED END	48"-90"	10½"	0.064"-0.109"		0.052"		0.079"	½"	⅞"	32 ksi							
		96"-120"	10½"	0.079"-0.109"		0.052"		0.109"	½"	⅞"	45 ksi							
	5" × 1" REROLLED END	48"-66"	7½"	0.064"-0.109"		0.064"		0.079"	½"	⅞"	32 ksi	2½" × 1½" × 3/16"	2½" × 1½" × 3/16"	1-½"				3-½"
		72"-90"	7½"	0.064"-0.079"		0.064"		0.079"	½"	⅞"	32 ksi	2½" × 1½" × 3/16"	2½" × 1½" × 3/16"	1-½"				3-½"
		48"-90"	7½"	0.064"-0.138"		0.064"		0.079"	½"	⅞"	32 ksi							
		48"-120"	12" SEE	0.064"-0.109"		0.064"		0.079"	½"	⅞"	32 ksi							
		48"-84"	12" NOTE	0.138"		0.064"		0.079"	½"	⅞"	32 ksi							
		90"-120"	12" 11	0.138"		0.064"		DOUBLE 0.079"	½"	⅞"	32 ksi							

SPIRAL RIB PROFILE

COUPLING TYPE	PIPE CORRUGATION	PIPE SIZE	W	PIPE WALL THICKNESS SSRP	PIPE WALL THICKNESS ASRP	BAND THICKNESS SSRP	BAND THICKNESS ASRP	BAR AND STRAP (SSRP ONLY) STRAP THICKNESS	BOLTS Dia	BAR Dia	BAR YIELD STRENGTH	ANGLE DIMENSIONS SSRP	ANGLE DIMENSIONS ASRP	BOLTS (No.- Dia) SSRP	BOLTS (No.- Dia) ASRP	RIVETS ANGLE TO BAND SSRP	RIVETS ANGLE TO BAND ASRP	SPOT WELDS ANGLE TO BAND SSRP
ANNULAR	2⅔" × ½" * REROLLED END	24"-36"	12"	0.064"-0.109"	0.060"-0.105"	0.052"	0.060"	0.079"	½"	⅞"	32 ksi	2" × 2" × 3/16"	2" × 2" × 3/16"	3-½"	3-½"	3-⅜"	3-⅜"	5-½"
		42"-60"	12"	0.064"-0.109"	0.075"-0.105"	0.052"	0.105"	0.079"	½"	⅞"	32 ksi	2" × 2" × 3/16"	2" × 2" × 3/16"	3-½"	3-½"	3-⅜"	3-⅜"	5-½"
		66"-72"	12"	0.064"-0.109"		0.052"		0.079"	½"	⅞"	32 ksi	2" × 2" × 3/16"	2" × 2" × 3/16"	3-½"	3-½"	3-⅜"	3-⅜"	5-½"
		78"-114"	12"	0.079"-0.109"		0.079"		0.109"	½"	⅞"	45 ksi	2" × 2" × 3/16"	2" × 2" × 3/16"	3-½"	3-½"	3-⅜"	3-⅜"	5-½"
HUGGER	2⅔" × ½" * REROLLED END	24"-72"	10½"	0.064"-0.109"		0.052"		0.079"	½"	⅞"	32 ksi							
		78"-84"	10½"	0.109"		0.079"		0.109"	½"	⅞"	45 ksi							

* See Note 14.

14. All profiles of Spiral Rib Pipe (¾" × ¾" ribs at 7½" pitch and ¾" × 1" ribs at 11½" pitch in both steel and aluminum and ¾" × 1" ribs at 8½" pitch in steel only) shall be manufactured with rerolled ends. Corrugation profile of the rerolled ends shall be 2⅔" × ½" annual corrugations with a minimum of two full corrugations at each end.

NOTES:

To accompany plans dated 1-26-09

1. All ferrous metal coupling band connection hardware shall be galvanized or electro-plated in accordance with the Standard Specifications.
2. For helically corrugated coupling bands, the connection angles may be oriented parallel to the pipe axis, provided connecting holes are slotted lengthwise sufficiently to allow adjustment for the helix angle.
3. Tension strap may be connected to band with either spot welds or fillet welds that develop minimum required strength of strap.
4. Use 1¼" gage line dimension on attached angle leg for rivets and spot welds.
5. Band thickness shall not be less than:
   a. 3 standard thicknesses lighter than the thickness of the pipe for Corrugated Steel Pipe.
   b. 2 standard thicknesses lighter than the thickness of the pipe and in no case lighter than 0.060" for Corrugated Aluminum Pipe.
6. Dimensions, thicknesses and strengths shown are minimum.
7. For pipe arches use same width band as for round pipe of equal periphery.
8. Fillet welds of equivalent strenght may be substituted for spot welds or rivets.
9. Spot welds shall develop minimum required strength of strap.
10. Pipe with rerolled ends having at least two 2⅔" × ½" annular corrugations at each end with or without an upturned flange may be connected with any of the annular coupling bands shown for pipe of the same diameter and wall thickness and having 2⅔" × ½" corrugations.
11. In the case of H-12 huggerbands, two piece bands are required for diameters through 96" and three piece bands are required for diameters 102" through 120".
12. Two piece bands are required for pipes greater than 42" diameter.
13. The 2¼" × 2" × 0.109" thick galvanized die-formed angle connector may be used in lieu of the 2" × 2" × 3/16" angle connector for standard joints only on pipes through 72" diameter.

STATE OF CALIFORNIA
DEPARTMENT OF TRANSPORTATION

CORRUGATED METAL PIPE COUPLING DETAILS No. 5 STANDARD JOINT

NO SCALE

RSP D97E DATED JUNE 6, 2008 SUPERSEDES STANDARD PLAN D97E
DATED MAY 1, 2006 - PAGE 187 OF THE STANDARD PLANS BOOK DATED MAY 2006.

REVISED STANDARD PLAN RSP D97E

2006 REVISED STANDARD PLAN RSP D97E

4-2-08

DIST	COUNTY	ROUTE	POST MILES TOTAL PROJECT	SHEET NO.	TOTAL SHEETS
03	Nev	5717		23	106

Raymond Don Tsztoo
REGISTERED CIVIL ENGINEER

June 6, 2008
PLANS APPROVAL DATE

REGISTERED PROFESSIONAL ENGINEER
Raymond Don Tsztoo
No. C37332
Exp. 6-30-08
CIVIL
STATE OF CALIFORNIA

The State of California or its officers or agents shall not be responsible for the accuracy or completeness of electronic copies of this plan sheet.

To accompany plans dated 1-26-09

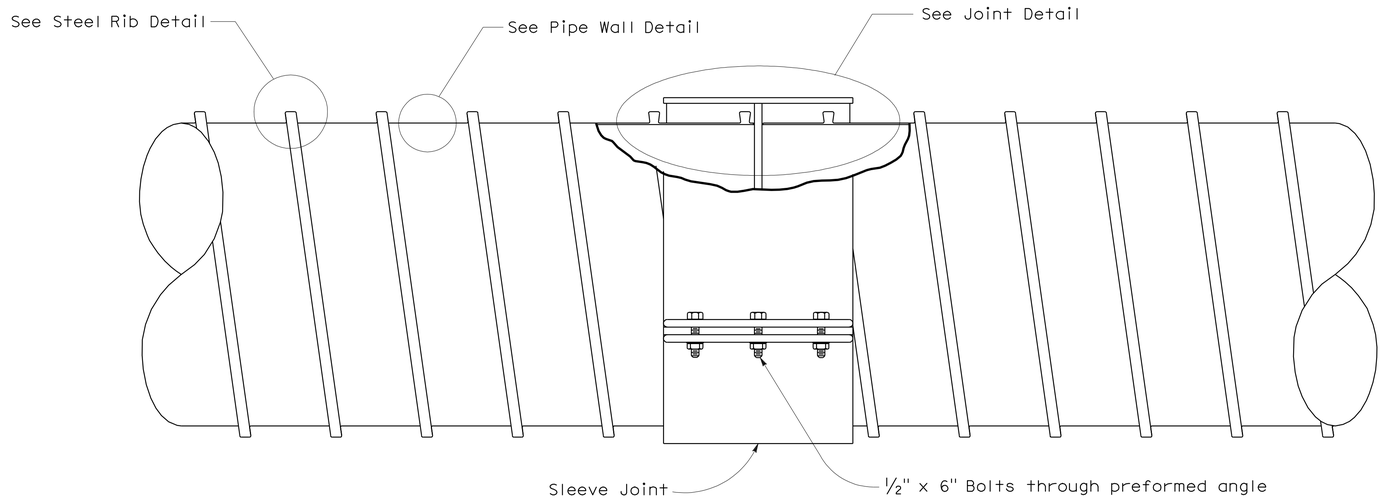

COMPOSITE STEEL SPIRAL RIB PIPE

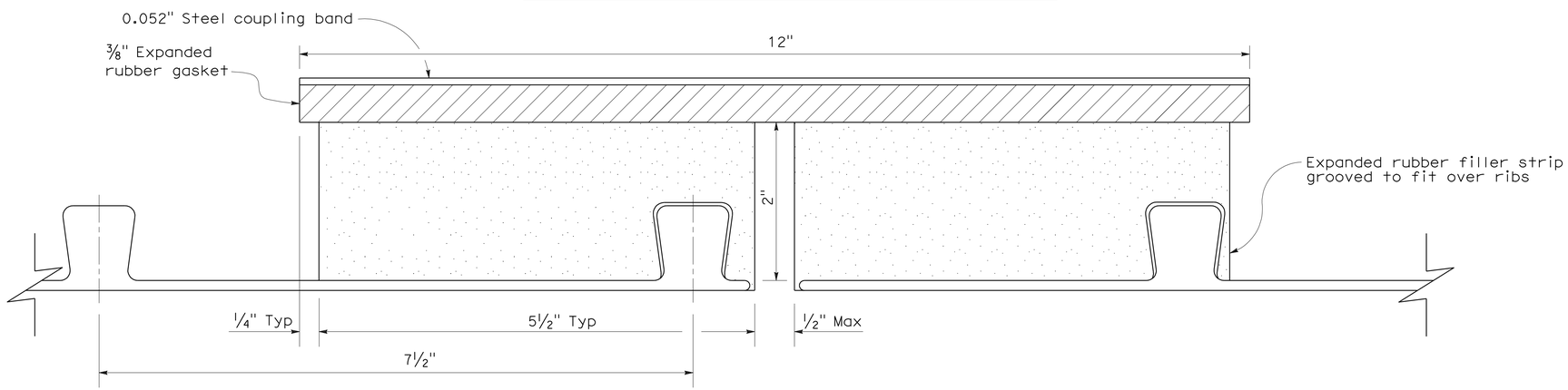

JOINT DETAIL

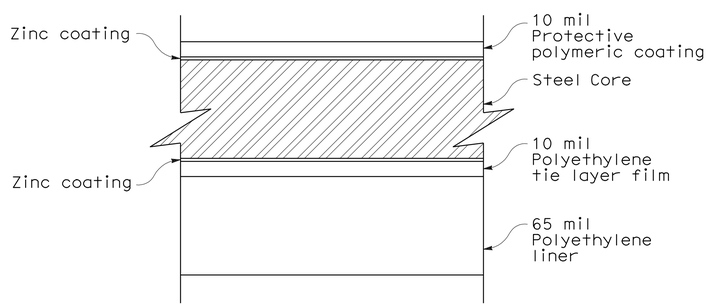

PIPE WALL DETAIL

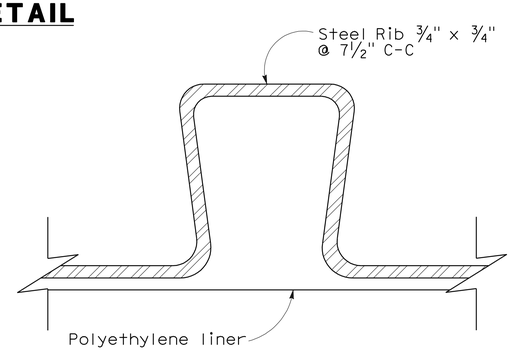

STEEL RIB DETAIL

NOTES:

1. Pipe to conform to ASTM A 978.
2. See Standard Plan A62F for backfill details.
3. Protective polymer film to conform to ASTM A 742 and AASHTO M 246.
4. See Standard Plan D97C for Universal Coupling details.
5. Strap joint connection shall consist of 2 separate bolted preformed connectors joined to form one strap when pipe inside diameter is greater than or equal to 60".

STATE OF CALIFORNIA
DEPARTMENT OF TRANSPORTATION

COMPOSITE STEEL SPIRAL RIB PIPE WITH SMOOTH INTERIOR STANDARD JOINT

NO SCALE

NSP D97J DATED JUNE 6, 2008 SUPPLEMENTS THE STANDARD PLANS BOOK DATED MAY 2006.

NEW STANDARD PLAN NSP D97J

2006 NEW STANDARD PLAN NSP D97J

4-24-08

DIST	COUNTY	ROUTE	POST MILES TOTAL PROJECT	SHEET NO.	TOTAL SHEETS
03	Nev	5717		24	106

LICENSED LANDSCAPE ARCHITECT

December 1, 2006
PLANS APPROVAL DATE

The State of California or its officers or agents shall not be responsible for the accuracy or completeness of electronic copies of this plan sheet.

LICENSED LANDSCAPE ARCHITECT — Gregory A. Balzer — 02-28-07 Renewal Date — 11-27-06 Date — STATE OF CALIFORNIA

To accompany plans dated 1-26-09

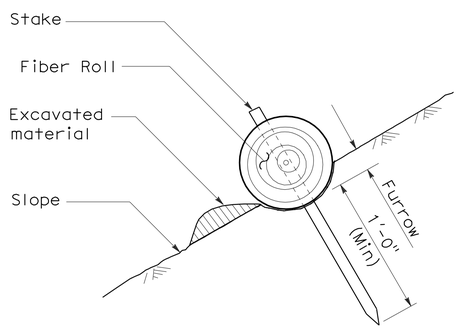

SECTION

FIBER ROLL (TYPE 1)

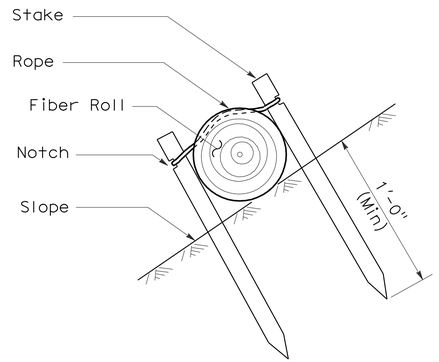

SECTION

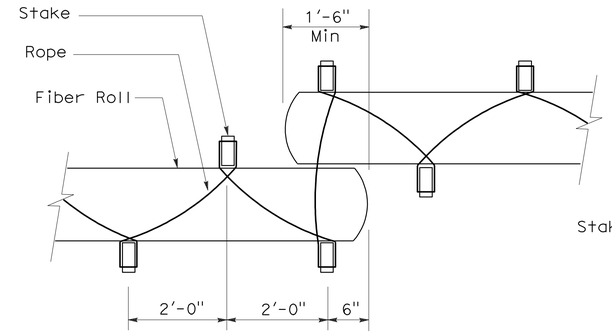

PLAN

FIBER ROLL (TYPE 2)

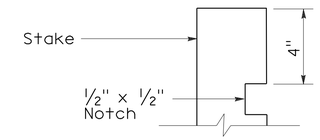

ELEVATION

STAKE NOTCH DETAIL

NOTES:

1. Fiber roll spacing varies depending upon slope inclination.
2. Installations shown in the perspectives are for slope inclination of 10:1 and steeper.

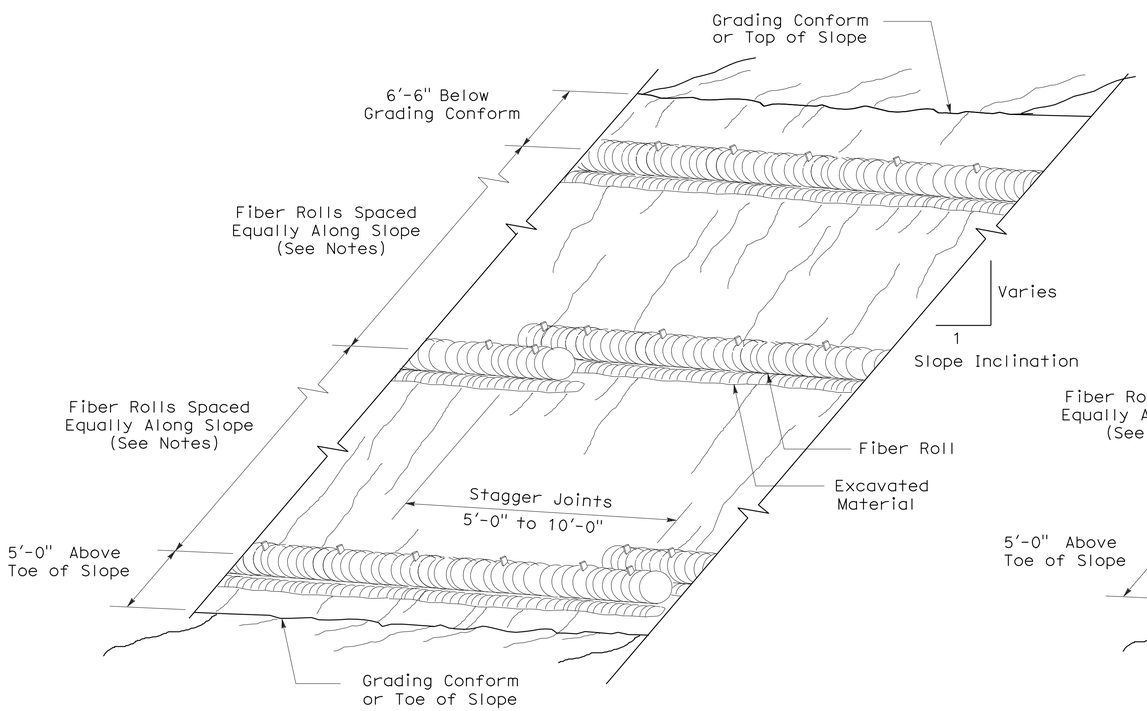

PERSPECTIVE

FIBER ROLL (TYPE 1)

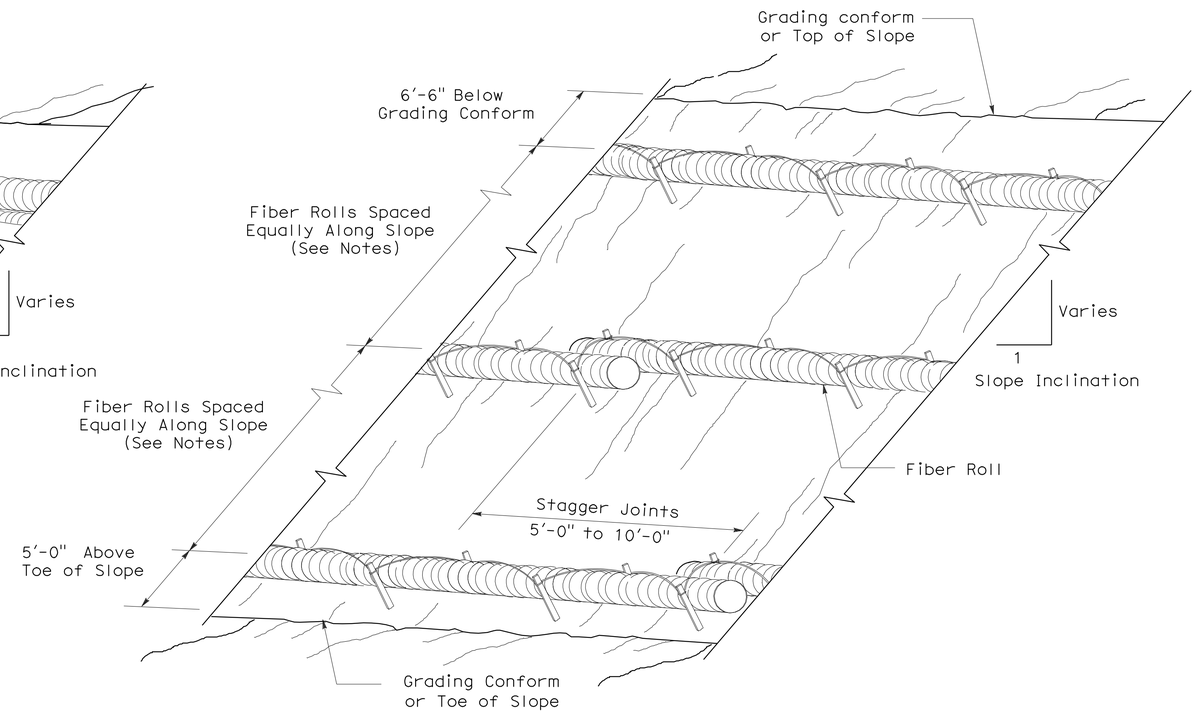

PERSPECTIVE

FIBER ROLL (TYPE 2)

STATE OF CALIFORNIA
DEPARTMENT OF TRANSPORTATION

EROSION CONTROL DETAILS (FIBER ROLL)

NO SCALE

NSP H51 DATED DECEMBER 1, 2006 SUPPLEMENTS
THE STANDARD PLANS BOOK DATED MAY 2006

NEW STANDARD PLAN NSP H51

2006 NEW STANDARD PLAN NSP H51

10-05-06

DIST	COUNTY	ROUTE	POST MILES TOTAL PROJECT	SHEET NO.	TOTAL SHEETS
03	Nev	5717		25	106

Randell D. Hiatt
REGISTERED CIVIL ENGINEER

June 6, 2008
PLANS APPROVAL DATE

REGISTERED PROFESSIONAL ENGINEER
Randell D. Hiatt
No. C50200
Exp. 6-30-09
CIVIL
STATE OF CALIFORNIA

The State of California or its officers or agents shall not be responsible for the accuracy or completeness of electronic copies of this plan sheet.

To accompany plans dated 1-26-09

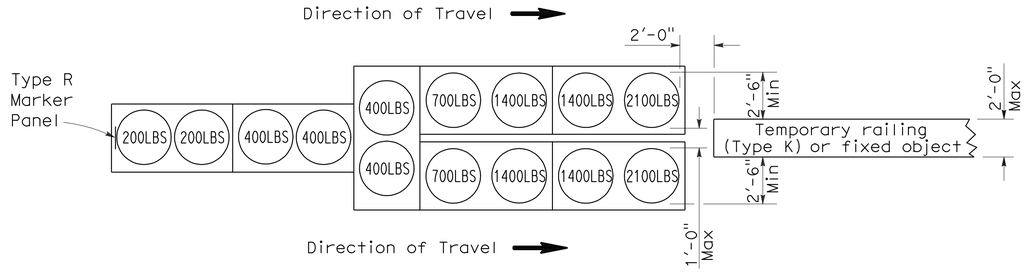

ARRAY 'TU14'

Approach speed 45 mph or more

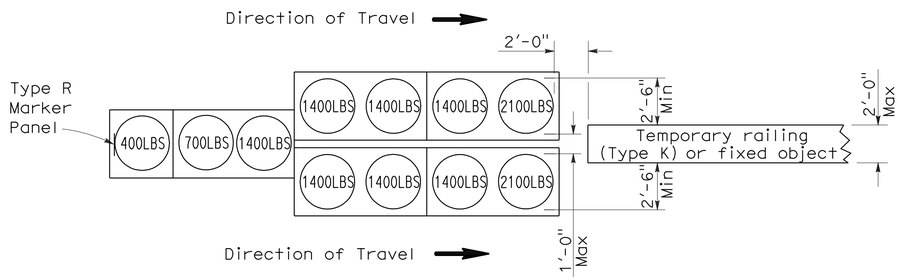

ARRAY 'TU11'

Approach speed less than 45 mph

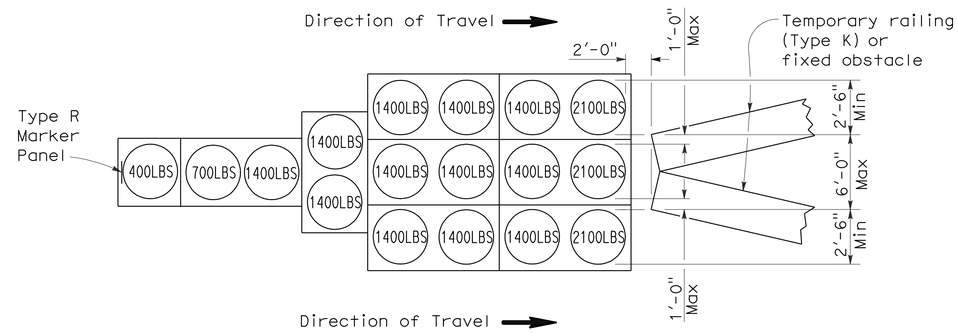

ARRAY 'TU17'

Approach speed less than 45 mph

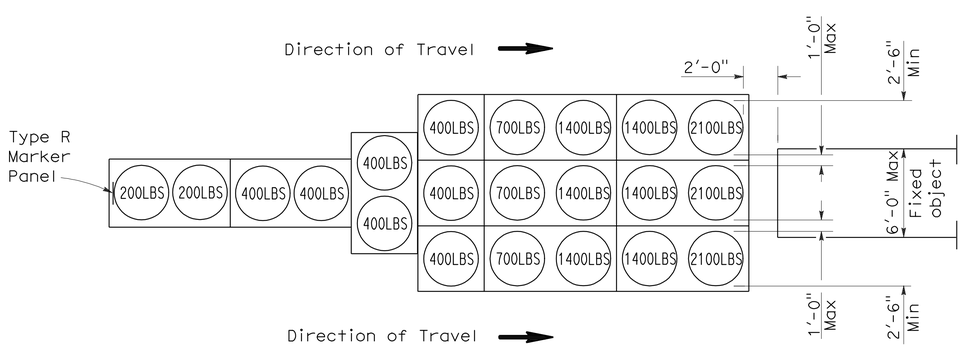

ARRAY 'TU21'

Approach speed 45 mph or more

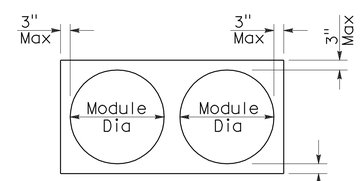

PLAN

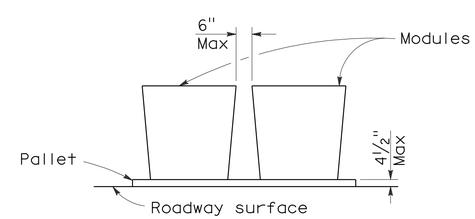

ELEVATION

CRASH CUSHION PALLET DETAIL

See Note 7

NOTES:

1. (XXX) Indicates sand filled module location and weight of sand in pounds for each module. Module spacing is based on the greater diameter of the module.
2. All sand weights are nominal.
3. Temporary crash cushion arrays shall not encroach on the traveled way.
4. Place the top of Type R marker panel 1" below the module lid.
5. Refer to Standard Plan A73B for marker details.
6. Approach speeds indicated conform to NCHRP 350 Report criteria.
7. Use of pallets is optional.

STATE OF CALIFORNIA
DEPARTMENT OF TRANSPORTATION

TEMPORARY CRASH CUSHION, SAND FILLED (UNIDIRECTIONAL)

NO SCALE

RSP T1A DATED JUNE 6, 2008 SUPERSEDES STANDARD PLAN T1A
DATED MAY 1, 2006 - PAGE 211 OF THE STANDARD PLANS BOOK DATED MAY 2006.

REVISED STANDARD PLAN RSP T1A

2006 REVISED STANDARD PLAN RSP T1A

DIST	COUNTY	ROUTE	POST MILES TOTAL PROJECT	SHEET NO.	TOTAL SHEETS
03	Nev	5717		26	106

Randell D. Hiatt
REGISTERED CIVIL ENGINEER

June 6, 2008
PLANS APPROVAL DATE

REGISTERED PROFESSIONAL ENGINEER
Randell D. Hiatt
No. C50200
Exp. 6-30-09
CIVIL
STATE OF CALIFORNIA

The State of California or its officers or agents shall not be responsible for the accuracy or completeness of electronic copies of this plan sheet.

To accompany plans dated 1-26-09

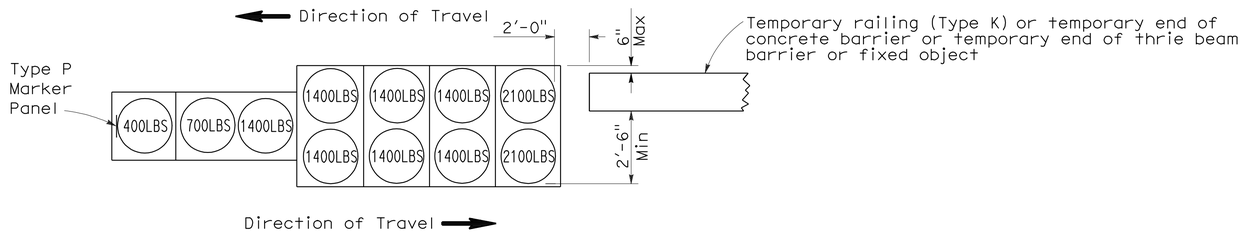

ARRAY 'TB11'

Approach speed less than 45 mph

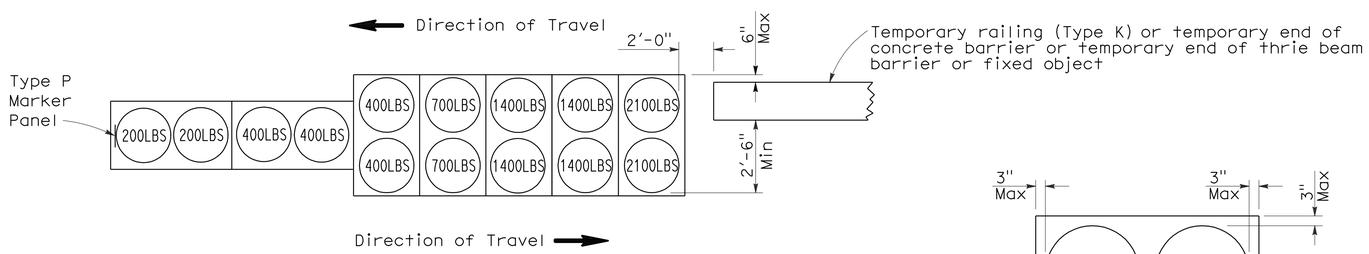

ARRAY 'TB14'

Approach speed 45 mph or more

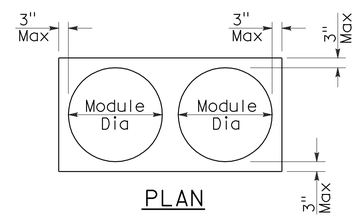

PLAN

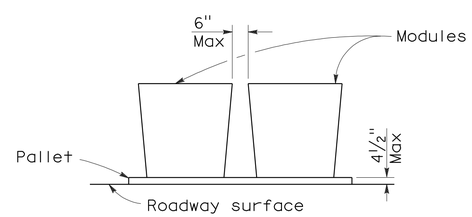

ELEVATION

CRASH CUSHION PALLET DETAIL

See Note 7

NOTES:

1. (XXX) Indicates sand filled module location and weight of sand in pounds for each module. Module spacing is based on the greater diameter of the module.
2. All sand weights are nominal.
3. Temporary crash cushion arrays shall not encroach on the traveled way.
4. Place the Type P marker panel so that the bottom of the panel rests upon the pallet.
5. Refer to Standard Plan A73B for marker details.
6. Approach speeds indicated conform to NCHRP 350 Report criteria.
7. Use of pallets is optional.

STATE OF CALIFORNIA
DEPARTMENT OF TRANSPORTATION

TEMPORARY CRASH CUSHION, SAND FILLED (BIDIRECTIONAL)

NO SCALE

RSP T1B DATED JUNE 6, 2008 SUPERSEDES STANDARD PLAN T1B
DATED MAY 1, 2006 - PAGE 212 OF THE STANDARD PLANS BOOK DATED MAY 2006.

REVISED STANDARD PLAN RSP T1B

2006 REVISED STANDARD PLAN RSP T1B

5-15-08

DIST	COUNTY	ROUTE	POST MILES TOTAL PROJECT	SHEET NO.	TOTAL SHEETS
03	Nev	5717		27	106

Randell D. Hiatt
REGISTERED CIVIL ENGINEER

June 6, 2008
PLANS APPROVAL DATE

REGISTERED PROFESSIONAL ENGINEER
Randell D. Hiatt
No. C50200
Exp. 6-30-09
CIVIL
STATE OF CALIFORNIA

The State of California or its officers or agents shall not be responsible for the accuracy or completeness of electronic copies of this plan sheet.

To accompany plans dated 1-26-09

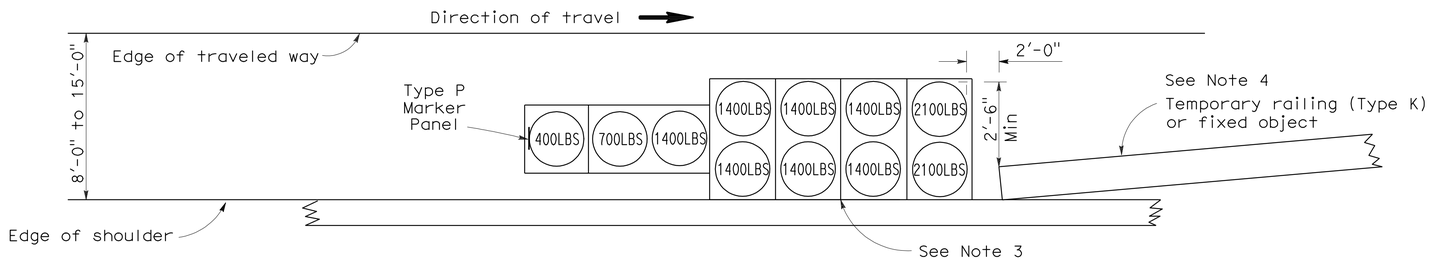

ARRAY 'TS11'

Approach speed less than 45 mph
See Note 9

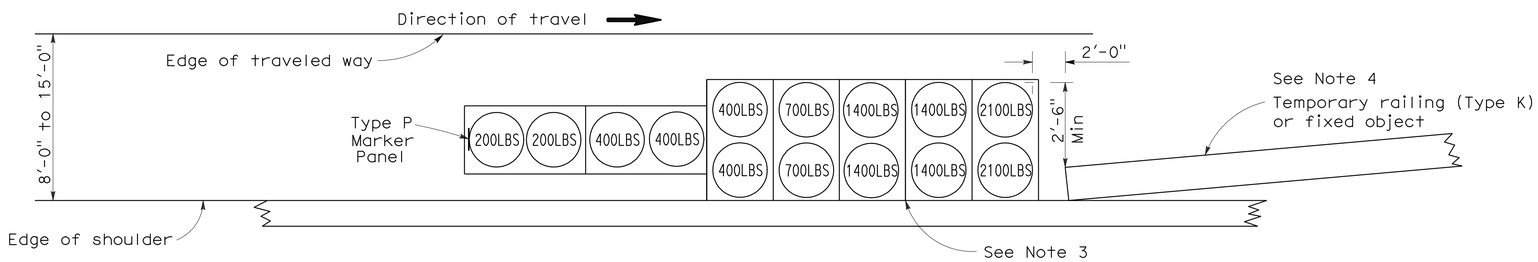

ARRAY 'TS14'

Approach speed 45 mph or more
See Note 9

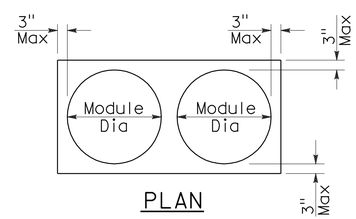

PLAN

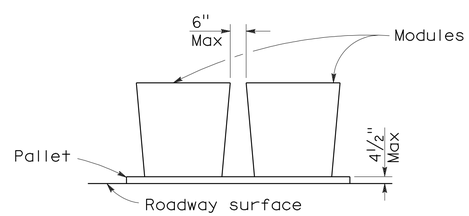

ELEVATION

CRASH CUSHION PALLET DETAIL

See Note 11

NOTES:

1. (XXX) Indicates sand filled module location and weight of sand in pounds for each module. Module spacing is based on the greater diameter of the module.
2. All sand weights are nominal.
3. The temporary crash cushion arrays shown on this plan shall be used only in locations where there will be traffic on one side of the temporary crash cushion array.
4. If the fixed object or approach end of the temporary railing is less than 15'-0" from the edge of traveled way, a temporary crash cushion is required in a construction or work zone.
5. Temporary crash cushion arrays shall not encroach on the traveled way.
6. Arrays for median shoulders shall conform to details shown on this plan for outside shoulders.
7. Place the Type P marker panel so that the bottom of the panel rests upon the pallet and faces traffic.
8. Refer to Standard Plan A73B for marker details.
9. For shoulder widths less than 8'-0", appropriate approved crash cushion protection, other than sand filled modules, shall be provided at fixed objects and at approach ends of temporary railing. The specific type of crash cushion shall be as shown on the project plans or as specified in the Special Provisions, or if not shown on the project plans or specified in the Special Provisions, shall be as approved by the Engineer.
10. Approach speeds indicated conform to NCHRP 350 Report criteria.
11. Use of pallets is optional.

STATE OF CALIFORNIA
DEPARTMENT OF TRANSPORTATION

TEMPORARY CRASH CUSHION, SAND FILLED (SHOULDER INSTALLATIONS)

NO SCALE

RSP T2 DATED JUNE 6, 2008 SUPERSEDES STANDARD PLAN T2
DATED MAY 1, 2006 - PAGE 213 OF THE STANDARD PLANS BOOK DATED MAY 2006.

REVISED STANDARD PLAN RSP T2

2006 REVISED STANDARD PLAN RSP T2

5-15-08

DIST	COUNTY	ROUTE	POST MILES TOTAL PROJECT	SHEET NO.	TOTAL SHEETS
03	Nev	5717		28	106

REGISTERED ELECTRICAL ENGINEER

October 5, 2007
PLANS APPROVAL DATE

REGISTERED PROFESSIONAL ENGINEER Jeffery G. McRae No. E14512 Exp. 6-30-08 ELECTRICAL STATE OF CALIFORNIA

The State of California or its officers or agents shall not be responsible for the accuracy or completeness of electronic copies of this plan sheet.

To accompany plans dated 1-26-09

ELECTROLIERS

STANDARD TYPES
15, 15D
15 STRUCTURE
21, 21D STRUCTURE
30
31
32
35
36-20A

High mast light pole

Double Arm lighting standard

Existing electrolier

Electrolier foundation (Future installation)

NOTES:

1. Luminaires shall be 310 W HPS when installed on Type 21, 21D, 30, 31, 32, 35 and 36-20A Standards, unless otherwise specified. Luminaires shall be 200 W HPS when installed on other type standards or poles, unless otherwise specified.
2. Luminaires shall be the cutoff type, ANSI Type III medium cutoff lighting distribution, unless otherwise specified.
3. Variations noted adjacent to symbol on project plans.

Electrolier (see project notes or project plans)

Luminaire on wood pole

STANDARD NOTES:

- AB — Abandon. If applied to conduit, remove conductors.
- BC — Install pull box in existing conduit run.
- BP — Pedestrian barricade, type as indicated on plan.
- CB — Install conduit into existing pull box.
- CC — Connect new and existing conduit. Remove existing conductors and install conductors as indicated.
- CF — Conduit to remain for future use. Remove conductors. Install pull wire or rope.
- DH — Detector handhole.
- FA — Foundation to be abandoned.
- IS — Install sign on signal mast arm.
- NS — No slip base on standard.
- PEC — Photoelectric control.
- PEU — Photoelectric unit.
- RC — Equipment or material to be removed and become the property of the Contractor.
- RE — Remove electrolier, fuses and ballast. Tape ends of conductors.
- RL — Relocate equipment.
- RR — Remove and reuse equipment.
- RS — Remove and salvage equipment.
- SC — Splice new to existing conductors.
- SD — Service disconnect.
- SF — Standard to remain for future use. Remove luminaire, pole conductors, fuses and ballast.
- TSP — Telephone service point.

ABBREVIATIONS AND EQUIPMENT DESIGNATIONS

PROPOSED	EXISTING	
BBS	bbs	Battery backup system
BC	bc	Bolt circle
C	C	Conduit
CCTV	cctv	Closed circuit television
CKT	ckt	Circuit
CMS	cms	Changeable message sign
DLC	dlc	Loop detector lead-in cable
EMS	ems	Extinguishable message sign
EVC	evc	Emergency vehicle cable
EVD	evd	Emergency vehicle detector
FB	fb	Flashing beacon
FBCA	fbca	Flashing beacon control assembly
FBS	fbs	Flashing beacon with slip base
FO	fo	Fiber optic
G	G	Ground (Equipment Grounding Conductor)
GFCI	GFCI	Ground fault circuit interrupt
HAR	har	Highway advisory radio
HEX	hex	Hexagonal
HPS	hps	High pressure sodium
IISNS	iisns	Internally illuminated street name sign
ISL	isl	Induction sign lighting
LED	led	Light emitting diode
LMA	lma	Luminaire mast arm
LPS	lps	Low pressure sodium
LTG	ltg	Lighting
LUM	lum	Luminaire
MAT	mat	Mast arm mounting vehicle signal faces, top attachment
MAS	mas	Mast arm mounting vehicle signal faces, side attachment
MAS-4A	mas-4A	Mast arm mounting vehicle signal faces, side attachment - 4 signal section
MAS-4B	mas-4B	
MAS-4C	mas-4C	
MAS-5A	mas-5A	Mast arm mounting vehicle signal faces, side attachment - 5 signal section
MAS-5B	mas-5B	
MC	mc	Mercury contactor
M/M	m/m	Multiple to multiple transformer
MT	mt	Conduit with pull wire or rope only
MTG	mtg	Mounting
	mv	Mercury vapor lighting fixture
N	N	Neutral (Grounded Conductor)
NC	NC	Normally closed
NO	NO	Normally open
PB	pb	Pull box
PEC	pec	Photoelectric control (Type I, II, III, IV or V as shown)
PED	ped	Pedestrian
PEU	peu	Photoelectric unit
PPB	ppb	Pedestrian push button
RL		Relocated equipment
RM	rm	Ramp metering
SB	sb	Slip base
SIC	sic	Signal interconnect cable
SIG	sig	Signal
SMA	sma	Signal mast arm
SNS	sns	Street name sign
SP	sp	Service point
TDC	tdc	Telephone demarcation cabinet
TMS	tms	Traffic monitoring station
TOS	tos	Traffic Operations System
VEH	veh	Vehicle
XFMR	xfmr	Transformer
COMM	comm	Communication
RWIS	rwis	Roadway weather information system

SOFFIT AND WALL MOUNTED LUMINAIRES

Pendant, 70 W HPS unless otherwise specified.

Flush, 70 W HPS unless otherwise specified.

Wall surface, 70 W HPS unless otherwise specified.

Existing soffit or wall luminaire to remain unmodified.

Existing soffit or wall luminaire to be modified as specified.

NOTE:

Arrow indicates "street side" of luminaire.

STATE OF CALIFORNIA
DEPARTMENT OF TRANSPORTATION

ELECTRICAL SYSTEMS (SYMBOLS AND ABBREVIATIONS)

NO SCALE

RSP ES-1A DATED OCTOBER 5, 2007 SUPERSEDES STANDARD PLAN ES-1A DATED MAY 1, 2006 - PAGE 400 OF THE STANDARD PLANS BOOK DATED MAY 2006.

REVISED STANDARD PLAN RSP ES-1A

2006 REVISED STANDARD PLAN RSP ES-1A

DIST	COUNTY	ROUTE	POST MILES TOTAL PROJECT	SHEET NO.	TOTAL SHEETS
03	Nev	5717		29	106

REGISTERED ELECTRICAL ENGINEER

October 5, 2007
PLANS APPROVAL DATE

REGISTERED PROFESSIONAL ENGINEER Jeffery G. McRae No. E14512 Exp. 6-30-08 ELECTRICAL STATE OF CALIFORNIA

The State of California or its officers or agents shall not be responsible for the accuracy or completeness of electronic copies of this plan sheet.

To accompany plans dated 1-26-09

CONDUIT

PROPOSED	EXISTING	
		Lighting Conduit, unless otherwise indicated or noted
		Traffic signal conduit
C	c	Communication conduit
T	t	Telephone conduit
F	f	Fire alarm conduit
FO	fo	Fiber optic conduit
		Conduit termination (RSP ES-9A C)
R	r	Conduit riser in/on structure or service pole

SERVICE EQUIPMENT

PROPOSED	EXISTING	
OH	oh	Overhead lines
U	U	Wood pole "U" indicates utility owned
		Pole guy with anchor
		Utility transformer - ground mounted
III		Service equipment enclosure type
		Service equipment enclosure door indicates front of enclosure
T	t	Telephone demarcation cabinet

POLE-MOUNTED SERVICE DESIGNATION

Type of installation

TYPE H SERVICE - 28'-10" ← Pole height above grade

ILLUMINATED OVERHEAD SIGN

PROPOSED	EXISTING	
		Overhead sign - Single post
		Overhead sign - Two post
		Overhead sign - Mounted on structure
		Overhead sign with electrolier

SIGNAL EQUIPMENT

PROPOSED	EXISTING	
		Pedestrian signal face
		Pedestrian push button post
		Pedestrian barricade
		Vehicle signal face (with backplate, 3-Section: red, yellow and green)
		Vehicle signal face with angle visors
PV	PV	Modifications of basic symbols: "L" indicates all non-arrow sections louvered "LG" indicates louvered green section only "PV" indicates 12" programmed visibility sections "8" indicates all 8" sections (only when specified)
		Type 15TS and Vehicle signal face
		Vehicle signal face with red, yellow and green left arrow sections
		Vehicle signal face with red and yellow sections and up green arrow
		Vehicle signal face (5 Section) with red, yellow and green sections and yellow and green right arrows
		Type 1 Standard and attached vehicle signal faces
		Standard with signal mast arm only and attached vehicle signal faces and internally illuminated street name sign
		Type 33 Standard, Left-turn vehicle signal face and sign
		Standard with luminaire and signal mast arms and attached vehicle signal faces
		Cantilever flashing beacon Type 9 Frame, with a sign unless otherwise specified or indicated
		Type 15-FBS Standard with two vehicle signal face sections with lens, backplate and visor with a sign
R	Y	Flashing beacon. One vehicle signal face section with lens, backplate and visor. "R" indicates red indication, "Y" indicates yellow indication
		Controller assembly. Door indicates front of cabinet

SIGNAL EQUIPMENT Cont

PROPOSED	EXISTING	
		Guard post
		Type 1 Standard with "Meter On" sign
		Emergency Vehicle detector

NOTES:

1. All signal sections shall be 12" unless shown otherwise.
2. Signal heads shall be provided with backplates unless shown otherwise.
3. Signal indication shall be LED.

STATE OF CALIFORNIA
DEPARTMENT OF TRANSPORTATION

ELECTRICAL SYSTEMS (SYMBOLS AND ABBREVIATIONS)

NO SCALE

RSP ES-1B DATED OCTOBER 5, 2007 SUPERCEDES STANDARD PLAN ES-1B DATED MAY 1, 2006 - PAGE 401 OF THE STANDARD PLANS BOOK DATED MAY 2006.

REVISED STANDARD PLAN RSP ES-1B

2006 REVISED STANDARD PLAN RSP ES-1B

7-10-07

DIST	COUNTY	ROUTE	POST MILES TOTAL PROJECT	SHEET NO.	TOTAL SHEETS
03	Nev	5717		30	106

REGISTERED ELECTRICAL ENGINEER

October 5, 2007
PLANS APPROVAL DATE

The State of California or its officers or agents shall not be responsible for the accuracy or completeness of electronic copies of this plan sheet.

REGISTERED PROFESSIONAL ENGINEER
Jeffery G. McRae
No. E14512
Exp. 6-30-08
ELECTRICAL
STATE OF CALIFORNIA

To accompany plans dated 1-26-09

EQUIPMENT IDENTIFICATION

ILLUMINATED SIGN IDENTIFICATION NUMBER:

Sign No. 12345
10 ISL SCI 1.0

- Sign number - Place on post or structure
- Transformer rating (kVA)
- Lighting control type
- Number and type of fixtures

Do NOT place on standard or structure

ELECTROLIER OR EQUIPMENT IDENTIFICATION NUMBER:

12345 - 15'-0"

- Mast arm length, if shown. Do not place on standard or structure.
- Equipment number - Place on standard or structure. Existing equipment numbers are shown in parenthesis

CONDUIT AND CONDUCTOR IDENTIFICATION:

1½"C, 2#10, 15#14, 2 DLC

- Number and size of conductors and cables
- Size of conduit in inches

Ø1, Ø2, Ø2P, etc.	Traffic phase identification for signal faces, detectors and phase diagrams
1 2 3	Project note numbers
A B C	Equipment description, installation or item numbers
1 2 3	Conduit run numbers

SIGNAL AND LIGHTING STANDARD (TYPICAL DESIGNATION):

19A - 3 - 100

- Wind velocity = 100 mph
- Case 3 arm loading
- Standard type
- Standard Plan sheet number
- Detail number or letter

MISCELLANEOUS EQUIPMENT

PROPOSED	EXISTING	
CMS	cms	Changeable message sign
		Closed circuit television camera
		Highway advisory radio pole and antenna
EMS	ems	Extinguishable message sign
M V	m v	Detection device M = Microwave sensor V = Video image sensor

WIRING DIAGRAM LEGEND

P	Pole
CB	Circuit breaker
A	Ampere
V	Volt
M	Metered
UM	Unmetered
NB	Neutral bus
GB	Ground bus
G	Equipment grounding conductor
N	Grounded conductor (Neutral)

- External conductor
- Conductor or bus
- Tie point
- Contactor coil
- Contactor, Contact NO
- Terminal blocks
- Contactor, Contact NC
- Enclosure bond
- Grounding electrode
- Circuit breaker
- Receptacle

PULL BOXES

PROPOSED	EXISTING	
		Pull box-No. 5 unless otherwise indicated or noted.
3	9A(21)	Pull box-Additional designations or descriptions

3 = No. 3½ pull box
5 = No. 5 pull box
6 = No. 6 pull box
7 = No. 7 (Ceiling pull box)
8 = No. 8 (Pendant soffit pull box)
9 = No. 9 pull box
9A = No. 9A pull box

(C) = Communications pull box
(E) = Pull box with extension
(S) = Sprinkler control pull box
(21) = Anchor bolts and conduit for future installation of Type 21 Standard
(T) = Traffic pull box

VEHICLE DETECTORS

5 J 9 U

- Vehicle detector designation
- U = Upper
  L = Lower
- Slot number in input file
- Input file (I or J)
- Phase

PROPOSED	EXISTING	
		Type A detector loop. Outline of sawcut shown.
		Type B detector loop. Outline of sawcut shown.
		Type C detector loop. Outline of sawcut shown.
		Type D detector loop. Outline of sawcut shown.
		Type E detector loop. Outline of sawcut shown.
		Type Q detector loop. Outline of sawcut shown.
		Magnetic detector
DH	dh	Detector handhole
		Microwave or video detection zone

STATE OF CALIFORNIA
DEPARTMENT OF TRANSPORTATION

ELECTRICAL SYSTEMS (SYMBOLS AND ABBREVIATIONS)

NO SCALE

RSP ES-1C DATED OCTOBER 5, 2007 SUPERCEDES STANDARD PLAN ES-1C DATED MAY 1, 2006 - PAGE 402 OF THE STANDARD PLANS BOOK DATED MAY 2006.

REVISED STANDARD PLAN RSP ES-1C

2006 REVISED STANDARD PLAN RSP ES-1C

DIST.	COUNTY	ROUTE	POST MILES TOTAL PROJECT	SHEET NO.	TOTAL SHEETS
03	Nev	5717		31	106

LICENSED ARCHITECT — DATE 7/30/07

LICENSED ARCHITECT Warren Lai No. C-17122 Exp. 8/30/09 STATE OF CALIFORNIA

1-26-09
PLANS APPROVAL DATE

The State of California or its officers or agents shall not be responsible for the accuracy or completeness of electronic copies of this plan sheet.

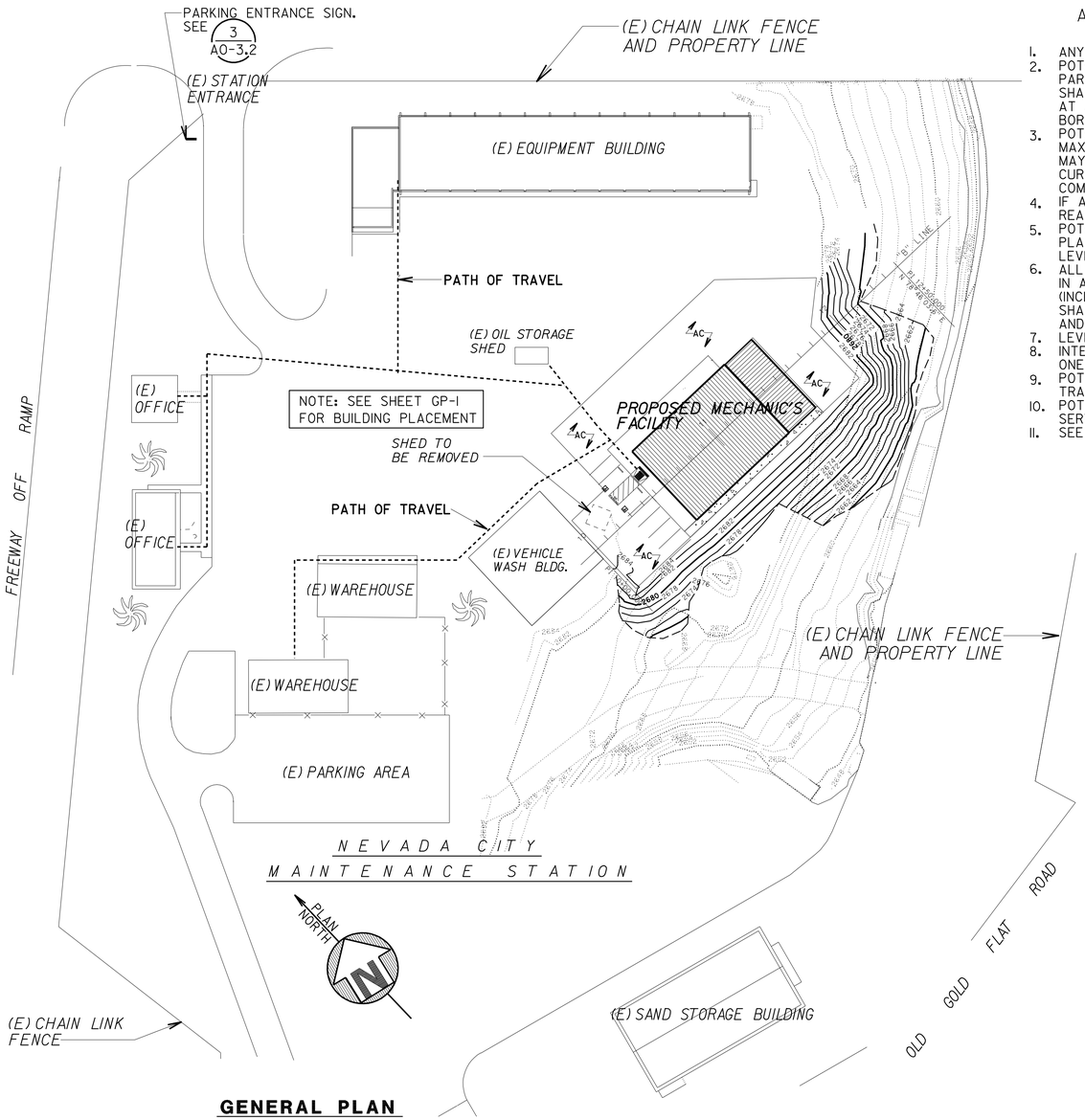

GENERAL PLAN
SCALE: 1"=40'-0"

ACCESSIBILITY NOTES

1. ANY POT CONNECTING (E) BUILDINGS AND FACILITIES ARE NOT REQUIRED TO BE INCLUDED IN THE SCOPE OF WORK.
2. POTs INDICATED AT GENERAL PLAN SHALL BE THE MOST PRACTICAL DIRECT ROUTE BETWEEN EXISTING DISABLED PARKING SPACES AND VARIOUS EXISTING OR NEW DOORS AT AFFECTED BUILDINGS. EXACT LOCATIONS OF POTs SHALL BE DETERMINED BY THE FIELD ENGINEER. THE CONTRACTOR SHALL VERIFY AND REMOVE ANY BARRIERS AT ALL THE POTs TO COMPLY WITH ALL THE ITEMS BELOW. ALL THE DESIGNATED POTs SHALL BE STRIPED WITH BORDERS AND HATCHED LINES.
3. POTs SHALL BE MIN 48" WIDE, MIN. 80" HEAD CLEARANCE, MAX. 5% SLOPE IN THE DIRECTION OF TRAVEL, MAX. 2% CROSS SLOPE, MAX. 1/2 " LEVEL CHANGE W/ MAX 1:2 SLOPE, AND LEVEL CHANGE NOT EXCEEDING 1/4 " MAY BE VERTICAL. ANY LEVEL CHANGE EXCEEDS 1/2 " SHALL BE ACCOMMODATED BY CODE-COMPLIANT CURB RAMP, AND ANY SLOPE IN THE DIRECTION OF TRAVEL EXCEEDS 5% SHALL BE ACCOMMODATED BY CODE-COMPLIANT RAMP.
4. IF ANY POTs ARE LESS THAN 60" WIDE, THEN PASSING SPACE AT LEAST 60"X60" SHALL BE LOCATED AT REASONABLE INTERVALS NOT TO EXCEED 200'.
5. POTs SURFACE SHALL BE FIRM, STABLE, SLIP-RESISTANT, W/O LOOSE GRAVEL, SAND, CHIPS, ETC. ANY PLANTER/GRATE/COVER IN OR ADJACENT TO POTs SHALL REQUIRE EDGE PROTECTION OF MIN 6" HIGH CURB IF LEVEL CHANGE BETWEEN POT AND PLANTER/GRATE/COVER EXCEEDS 4".
6. ALL (E) AND (N) DOORS CONNECTION POTs SHALL HAVE LEVEL AREAS AT BOTH SIDES OF DOORS W/ MAX. 2% SLOPE IN ANY DIRECTION. EXTERIOR LEVEL AREAS SHALL BE MIN 60"X60" IN THE DIRECTION OF DOOR SWING (INCLUDING MIN. 24" PAST DOOR STRIKE EDGE), AND MIN. 48" X 48" OPPOSITE DOOR SWING. INTERIOR LEVEL AREAS SHALL BE MIN. 60" DEEP X 54" WIDE IN THE DIRECTION OF DOOR SWING (INCLUDING MIN 18" PAST DOOR STRIKE EDGE), AND MIN 48" X 48" OPPOSITE DOOR SWING.
7. LEVEL CHANGE AT THE ABOVE DOORWAY, INCLUDING THRESHOLD THICKNESS, SHALL BE MAX 1/2 "
8. INTERIOR AISLES FORMED BY EQUIPMENT/STORED MATERIALS/ WALLS SHALL BE MIN. 36" WIDE IF SERVING ONE SIDE, AND MIN. 44" WIDE IF SERVING BOTH SIDES.
9. POT IS NOT REQUIRED FROM (E) STATION ENTRANCE ABUTTING PUBLIC STREETS, WHICH DO NOT HAVE PUBLIC TRANSPORTATION.
10. POT IS NOT REQUIRED FROM NEW BUILDING TO (E) SAND STORAGE BLDG., AS THE LATTER IS ACCESSED BY SERVICE VEHICLES ONLY WITHOUT PEDESTRIAN TRAFFIC.
11. SEE SHEET A-1FOR ADDITIONAL POTS AT NEW BUILDING.

ACCESSIBILITY DESIGN APPROVAL STAMP
DOT / DES / OTA
03-318001
DISTRICT - EA
Reviewed by: YA WANG
Date: 10-27-08

CALIFORNIA STATE FIRE MARSHAL APPROVED
Approval of this plan does not authorize or approve any omission or deviation from applicable regulations. Final approval is subject to field inspection. One set of approved plans shall be available on the project site at all times.
Reviewed by: JEFFREY SCHWARTZ
Approval date: 1/11/10

INDEX TO DRAWINGS

SHEET No. — SHEET TITLE

GENERAL PLAN SHEETS
GP-0 — GENERAL PLAN AND INDEX
GP-1 — SITE PLAN AND CODE REVIEW

ARCHITECTURAL
A0-1 — ARCHITECTURAL ABBREVIATIONS AND SYMBOLS
A0-2.1 — FINISH AND DOOR SCHEDULES
A0-2.2 — WINDOW AND LOUVER SCHEDULES
A0-3.1 — ACCESSIBILITY STANDARD DETAILS
A0-3.2 — ACCESSIBILITY STANDARD DETAILS
A0-3.3 — ACCESSIBILITY STANDARD DETAILS
A0-3.4 — ACCESSIBILITY STANDARD DETAILS
A0-3.5 — ACCESSIBILITY STANDARD DETAILS
A0-4.1 — TITLE 24 ENERGY COMPLIANCE FORMS
A0-4.2 — TITLE 24 ENERGY COMPLIANCE FORMS
A0-4.3 — TITLE 24 ENERGY COMPLIANCE FORMS
A-1 — FLOOR PLAN
A-2 — REFLECTED CEILING AND ROOF PLANS
A-3 — BUILDING SECTIONS
A-4 — EXTERIOR ELEVATIONS & INTERIOR ELEVATIONS
A-5 — INTERIOR ELEVATIONS
A-6 — BUILDING DETAILS
A-7 — DOOR AND LOUVER DETAILS
A-8 — WINDOW AND MISCELLANEOUS DETAILS
A-9 — MISCELLANEOUS DETAILS
A-10 — BUILDING SECTION C-C

STRUCTURAL
ST-0 — LEGEND
ST-1A — WOOD FRAMING STANDARD - NOTES
ST-1B — WOOD FRAMING STANDARD - DETAILS
ST-2 — CONCRETE STANDARD
ST-3 — CONCRETE MASONRY UNIT STANDARD
STI-1 — FOUNDATION PLAN
STI-2 — ROOF FRAMING PLAN
STI-3 — PREFABRICATED WOOD I BEAM RAFTER
STI-4 — TYPICAL SECTIONS
STI-5 — FOUNDATION DETAILS
STI-6 — PILASTER AND LINTEL DETAILS
STI-7 — FOOTING AND ROOF FRAMING DETAILS

STRUCTURAL CONT.
STI-8 — FRAMING DETAILS
STI-9 — FRAMING DETAILS
STI-10 — ROOF DECK OPENING AND WELDING DETAILS
STI-11 — EVAPORATIVE COOLER PLATFORM PLANS
STI-12 — EVAPORATIVE COOLER PLATFORM ELEVATIONS
STI-13 — EVAPORATIVE COOLER PLATFORM DETAILS
STI-14 — LOG OF TEST BORINGS

MECHANICAL
M0-0 — ABBREVIATIONS AND LEGEND
M0-1 — SITE PLAN
M1-1 — HVAC PLAN
M1-2 — PLUMBING PLAN
M1-3 — DOMESTIC WATER ISOMETRIC
M1-4 — SANITARY SEWER ISOMETRIC
M3-0 — EQUIPMENT SCHEDULE
M3-1 — CRANE DETAILS
M3-2 — AIR AND LUBRICATION SYSTEM
M3-3 — MISCELLANEOUS DETAILS 1
M3-4 — MISCELLANEOUS DETAILS 2
M3-5 — MISCELLANEOUS DETAILS 3
M3-6 — MISCELLANEOUS DETAILS 4
M3-7 — WATER SUPPLY DETAILS
M3-8 — FIRE WATER SUPPLY DETAILS
M3-9 — LADDER DETAILS

ELECTRICAL
EE0-0 — LEGEND
EE0-1 — EXISTING SITE PLAN
EE0-2 — SITE PLAN
EE0-3 — EXISTING ENLARGED PLAN
EE0-4 — MODIFIED ENLARGED PLAN
EE0-5 — ENLARGED PLAN DETAILS
EE0-6 — MAIN SWITCHBOARD AND DETAILS
EE0-7 — EXISTING POWER SINGLE LINE DIAGRAM
EE0-8 — MODIFIED POWER SINGLE LINE DIAGRAM
EE1-1 — POWER PLAN 1
EE1-2 — POWER PLAN 2
EE1-3 — COMMUNICATION PLAN
EE1-4 — LIGHTING PLAN
EE1-5 — LIGHTING SCHEMATIC DIAGRAMS AND DETAILS
EE1-6 — POWER SCHEMATIC DIAGRAMS AND DETAILS
EE1-7 — INTRUSION ALARM SYSTEM
EE1-8 — INTRUSION ALARM SCHEDULE
EE1-9 — PANEL F AND PANEL L SCHEDULES

DESIGN SUPERVISOR
DESIGN ARCHITECT

DESIGNER	CHECKED BY:	DESIGN	BY
DRAWN BY	STRUCTURAL REVIEW	DETAILS	BY
		QUANTITIES	BY

SHEET LEGEND
A-1 ARCHITECTURAL ST-1 STRUCTURAL
M-1 MECHANICAL EE-1 ELECTRICAL

STATE OF CALIFORNIA
DEPARTMENT OF TRANSPORTATION

DIVISION OF ENGINEERING SERVICES
ARCHITECTURAL AND STRUCTURAL DESIGN

BRIDGE NO. 17M5717
POST MILE 15.9

NEVADA CITY MAINTENANCE STATION
RESIDENT MECHANIC'S FACILITY
GENERAL PLAN AND INDEX

SHEET **GP-0**

a0_0_gp_0.dgn
DS OSD Imperial Rev. 11/98 20-JAN-2010 13:55

ORIGINAL SCALE IN INCHES FOR REDUCED PLANS 0 1 2 3

CU 03225
EA 318001

DISREGARD PRINTS BEARING EARLIER REVISION DATES → 4/8/07
REVISION DATES (PRELIMINARY STAGE ONLY)
SHEET 1 OF 2

20-JAN-2010 13:55
a0_0_gp_0.dgn

DIST.	COUNTY	ROUTE	POST MILES TOTAL PROJECT	SHEET NO.	TOTAL SHEETS
03	Nev	5717		32	106

LICENSED ARCHITECT — DATE 7/30/07

LICENSED ARCHITECT Warren Lai No. C-17122 Exp. 8/30/09 STATE OF CALIFORNIA

1-26-09
PLANS APPROVAL DATE

The State of California or its officers or agents shall not be responsible for the accuracy or completeness of electronic copies of this plan sheet.

ACCESSIBILITY DESIGN APPROVAL STAMP
DOT / DES / OTA
03-318001
DISTRICT - EA
Reviewed by: YA WANG
Date: 10-27-08

CALIFORNIA STATE FIRE MARSHAL APPROVED
Approval of this plan does not authorize or approve any omission or deviation from applicable regulations. Final approval is subject to field inspection. One set of approved plans shall be available on the project site at all times.
Reviewed by: JEFFREY SCHWARTZ
Approval date: 1/11/10

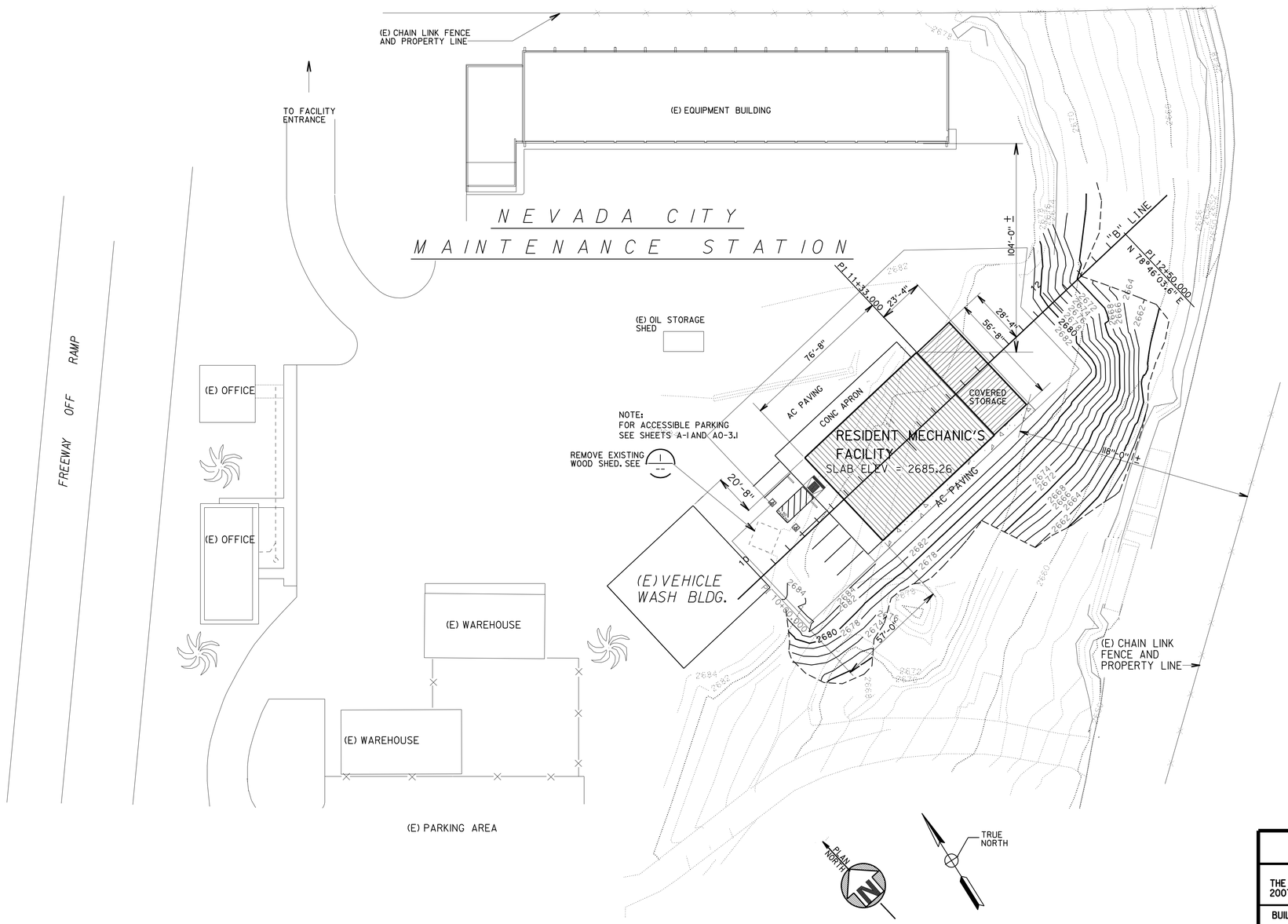

SITE PLAN
1"=30'-0"

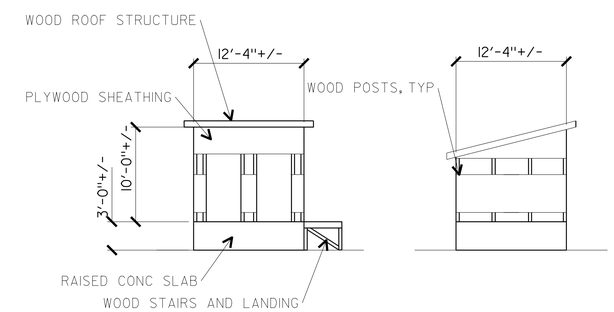

1 SHED DEMOLITION
SCALE 1/8" = 1'-0"

BUILDING DATA

THE BUILDING WORK ON THIS PROJECT HAS BEEN DESIGNED TO CONFORM TO THE 2007 TITLE 24 CALIFORNIA BUILDING CODE.

BUILDING NAME	BUILDING AREA	ALLOWABLE AREA	ALLOWABLE AREA SPRINKLERED	CONSTRUCTION TYPE	OCCUPANCY GROUP
RESIDENT MECHANIC'S FACILITY	4078 SQ FT	9000 SQ FT (PER CBC SECT 503.1.2 TABLE 503) (AREA COMPLIES)	N/A (PER CBC SECT 506.3)	V-B	S-1
COVERED STORAGE	1322 SQ FT				
	5400 SQ FT TOT.				

NOTE *The Contractor shall verify all controlling dimensions before ordering or fabricating any material*

DESIGN SUPERVISOR
DESIGN ARCHITECT
DESIGNER
DRAWN BY
CHECKED BY:
STRUCTURAL REVIEW

	BY	CHECKED
DESIGN	Gary Harris	
DETAILS	Gary Harris	
QUANTITIES		

STATE OF CALIFORNIA DEPARTMENT OF TRANSPORTATION

DIVISION OF ENGINEERING SERVICES ARCHITECTURAL AND STRUCTURAL DESIGN

BRIDGE NO. 17M5717
POST MILE 15.9

NEVADA CITY MAINTENANCE STATION RESIDENT MECHANIC'S FACILITY
SITE PLAN AND CODE REVIEW

SHEET **GP-1**

a0_0_gp_1.dgn
DS OSD Imperial Rev. 11/98 20-JAN-2010 13:55

ORIGINAL SCALE IN INCHES FOR REDUCED PLANS 0 1 2 3

CU 03225
EA 318001

DISREGARD PRINTS BEARING EARLIER REVISION DATES → 4/8/07

REVISION DATES (PRELIMINARY STAGE ONLY) SHEET 2 OF 2

20-JAN-2010 13:55
a0_0_gp_1.dgn

ARCHITECTURAL ABBREVIATIONS

&	AND
∟	ANGLE
℄	CENTER LINE
Ø	DIAMETER OR ROUND
□	SQUARE
d	PENNY
°	DEGREE
A/C	AIR CONDITIONING
AC	ASPHALT CONCRETE
AB	ANCHOR BOLT
ABV	ABOVE
ACOUS	ACOUSTICAL
ADJ	ADJUSTABLE
ALT	ALTERNATE
ALUM	ALUMINUM
APA	AMERICAN PLYWOOD ASSOCIATION
ARCH	ARCHITECTURAL, ARCHITECT
ASPH	ASPHALT
BD	BOARD
BIT	BITUMINOUS
BLDG	BUILDING
BLK	BLOCK
BLKG	BLOCKING
BM	BEAM
BN	BOUNDARY NAILING
BOT	BOTTOM
BR	BRIDGE
BTM	BOTTOM
BTWN	BETWEEN
BUR	BUILT-UP-ROOFING
CJ	CONTROL JOINT
CL	CHAIN LINK
CAB	CABINET
CB	CATCH BASIN
CEM	CEMENT
CER	CERAMIC
CH	CLOTHES HOOK
CIDH	CAST IN DRILLED HOLE
CIP	CAST IN PLACE
CKBD	CHALKBOARD
CLG	CEILING
CMU	CONCRETE MASONRY UNIT
CLO	CLOSET
CLR	CLEAR
COL	COLUMN
CONC	CONCRETE
CONN	CONNECTION
CONST	CONSTRUCTION
CONT	CONTINUOUS
CORR	CORRIDOR
CPT	CARPET
CT	CERAMIC TILE
CTR	CENTER
CTSK	COUNTERSUNK
CY	CUBIC YARD
DBL	DOUBLE
DEPT	DEPARTMENT
DET	DETAIL
DF	DOUGLAS FIR
DIA	DIAMETER
DIM	DIMENSION
DN	DOWN
DP	DEEP
DR	DOOR
DS	DOWNSPOUT
DWG	DRAWING
DWR	DRAWER
(E)	EXISTING
E	EAST
EA	EACH
EF	EXHAUST FAN
EHD	ELECTRIC HAND DRYER
EJ	EXPANSION JOINT
EL	ELEVATION (HEIGHT)
ELEC	ELECTRICAL
ELEV	ELEVATION (VIEW)
ELVR	ELEVATOR
EMER	EMERGENCY
ENCL	ENCLOSURE
EP	EDGE OF PAVEMENT
EQ	EQUAL
EC	EVAPORATIVE COOLER
EPB	ELECTRICAL PANELBOARD
EQUIP	EQUIPMENT
ESCL	ESCALATOR
ETW	EDGE OF TRAVEL WAY
EWC	ELECTRIC WATER COOLER
EXP	EXPANSION
EXPO	EXPOSED, EXPOSURE
EXT	EXTERIOR
FD	FLOOR DRAIN
FDN	FOUNDATION
FE	FIRE EXTINGUISHER
FEC	FIRE EXTINGUISHER CABINET
FEF	FUME EXHAUST FAN
FF	FINISH FLOOR
FG	FINISH GRADE
FH	FIRE HYDRANT
FHC	FIRE HOSE CABINET
FHMS	FLATHEAD METAL SCREW
FHWS	FLATHEAD WOOD SCREW
FIN	FINISH
FJ	FLOOR JOIST
FLASH	FLASHING
FLR	FLOOR
FLUOR	FLUORESCENT
FOC	FACE OF CONCRETE
FOF	FACE OF FINISH
FOM	FACE OF MASONRY
FOS	FACE OF STUD
FRMG	FRAMING
FRPP	FIBERGLASS REINFORCED PLASTIC PANEL
FT	FEET, FOOT
FTG	FOOTING
FURR	FURRING
FWY	FREEWAY
GA	GAUGE
GAL	GALLON
GALV	GALVANIZED
GB	GRAB BAR
GI	GALVANIZED IRON
GL	GLASS
GLM	GLUE LAMINATED MEMBER
GLZ	GLAZING
GR	GRADE
GSM	GALVANIZED SHEET METAL
GYP	GYPSUM
GYP SHTG	GYPSUM SHEATHING
HB	HOSE BIB
HC	HOLLOW CORE
HD	HEAD, HOLD DOWN
HDR	HEADER
HDWD	HARDWOOD
HDWR	HARDWARE
HEX	HEXAGONAL
HF	HEMLOCK-FIR
HGR	HANGER
HM	HOLLOW METAL
HORIZ	HORIZONTAL
HP	HEAT PUMP
HR	HOUR
HSB	HIGH STRENGTH BOLT
HT	HEIGHT
HVAC	HEATING, VENTILATING AIR CONDITIONING
HWY	HIGHWAY
ID	INSIDE DIAMETER
IDN	IDENTIFICATION
IN	INCH
INFO	INFORMATION
INSUL	INSULATION
INT	INTERIOR
JAN	JANITOR
JB	JUNCTION BOX
JH	JOIST HANGER
JST	JOIST
JT	JOINT
KIT	KITCHEN
LAB	LABORATORY
LAV	LAVATORY
LBF	POUND FORCE
LBS	POUNDS
LF	LINEAR FEET
LKR	LOCKER
LLV	LONG LEG VERTICAL
LOL	LAYOUT LINE
LPG	LIQUIFIED PETROLEUM GAS
LS	LAG SCREW
M	METER
MAT	MATERIAL
MAX	MAXIMUM
MB	MACHINE BOLT
MBR	MEMBER
MECH	MECHANICAL
MEMB	MEMBRANE
MET	METAL
MFR	MANUFACTURER
MH	MAN HOLE
MIN	MINIMUM
MIR	MIRROR
MISC	MISCELLANEOUS
MIW	MALLEABLE IRON WASHER
mm	MILLIMETER
MO	MASONRY OPENING
MTD	MOUNTED
MUL	MULLION
N	NORTH
ND	NAPKIN DISPOSAL
NIC	NOT IN CONTRACT
NO	NUMBER
NOM	NOMINAL
NTS	NOT TO SCALE
OBSC	OBSCURE
OC	ON CENTER
OD	OUTSIDE DIAMETER
OFF	OFFICE
OFD	OVERFLOW DRAIN
OG	ORIGINAL GROUND
OH	OPPOSITE HAND
OHD	OVERHEAD
OHWS	OVALHEAD WOOD SCREW
OP	OPERATIONS
OPNG	OPENING
OPP	OPPOSITE
OPT	OPTION, OPTIONAL
OS	OCCUPANCY SEPARATION
P	PITCH
PB	POST BASE
PC	POST CAP
PCC	PORTLAND CEMENT CONCRETE
PDF	POWDER DRIVEN FASTENERS
PH	PHILLIPS HEAD
PL	PLATE
PLAM	PLASTIC LAMINATE
PLAS	PLASTER
PLYWD	PLYWOOD
PMF	PRESSED METAL FRAME
POT	PATH OF TRAVEL
PR	PAIR
PRTN	PARTITION
PT	POINT
PTD	PAPER TOWEL DISPENSER
PTD/R	PAPER TOWEL DISPENSER /RECEPTACLE
PVC	POLYVINYL CHLORIDE
PWB	PREFABRICATED WOOD I BEAM
QT	QUARRY TILE
(R)	RELOCATED
R	RADIUS, RISER
R/W	RIGHT OF WAY
RD	ROOF DRAIN
RDWD	REDWOOD
REF	REFERENCE
REFG	REFRIGERATOR
REINF	REINFORCED(ING)
REQ	REQUIRED
RFG	ROOFING
RFSWN	ROUGHSAWN
RH	ROUND HEAD
RHWS	ROUND HEAD WOOD SCREWS
RJ	ROOF JOIST
RM	ROOM
RO	ROUGH OPENING
RSWN	RESAWN
RTE	ROUTE
RW	RETAINING WALL
RWL	RAINWATER LEADER
S	SOUTH
SC	SOLID CORE
SCHED	SCHEDULE
SD	SOAP DISPENSER
SDST	SELF DRILLING SELF TAPPING
SF	SQUARE FEET
SH	SHELF
SHWR	SHOWER
SHT	SHEET
SHTG	SHEATHING
SIM	SIMILAR
SL	SCORE LINE
SMS	SHEET METAL SCREW
SNR	SANITARY NAPKIN RECEPTACLE
SOHD	SECTIONAL OVERHEAD DOOR
SPEC	SPECIFICATION
SPS	STRUCTURAL PLYWOOD SHEATHING
SQ	SQUARE
SRRA	SAFETY ROADSIDE REST AREA
SS	SERVICE SINK
SST	STAINLESS STEEL
STA	STATION
STAG	STAGGER
STD	STANDARD
STL	STEEL
STOR	STORAGE
STRUC	STRUCTURAL
SUSP	SUSPENDED
T	TREAD
T&G	TONGUE & GROOVE
TB	TOLL BOOTH
TEL	TELEPHONE
TEMP	TEMPERED
TER	TERRAZZO
THK	THICK
THLD	THRESHOLD
TJ	TOOLED JOINT
TKBD	TACKBOARD
TN	TOE NAIL
TNVM	TAMPON/NAPKIN VENDING MACHINE
TOC	TOP OF CURB OR CONCRETE
TOP	TOP OF PAVEMENT
TOS	TOE OF SLOPE
TOT	TOTAL
TOW	TOP OF WALL
TS	TUBE STEEL
TSCD	TOILET SEAT COVER DISPENSER
TTD	TOILET TISSUE DISPENSER
TTY	TELETYPEWRITER
TYP	TYPICAL
UNF	UNFINISHED
UH	UNIT HEATER
UON	UNLESS OTHERWISE NOTED
UR	URINAL
VAR	VARIES
VCT	VINYL COMPOSITION TILE
VERT	VERTICAL
VEST	VESTIBULE
VR	VENT RISER
VTR	VENT THRU ROOF
W	WEST
W/	WITH
W/O	WITHOUT
WB	WORK BENCH
WC	WATER CLOSET
WD	WOOD
WDW	WINDOW
WH	WATER HEATER
WP	WORKING POINT
WR	WATER RESISTANT
WSCT	WAINSCOT
WT	WEIGHT
WTPR	WATERPROOFING
WWF	WELDED WIRE FABRIC
YD	YARD

NOTE *The Contractor shall verify all controlling dimensions before ordering or fabricating any material*

GENERAL NOTES

1. THE CONTRACTOR SHALL VERIFY ALL CONTROLLING DIMENSIONS AND FIELD CONDITIONS BEFORE ORDERING OR FABRICATING ANY MATERIALS OR ASSEMBLIES.
2. THE CONTRACTOR SHALL NOTIFY THE ENGINEER IN WRITING OF ANY DISCREPENCIES BETWEEN THESE PLANS AND ACTUAL MEASUREMENTS OR FIELD CONDITIONS.

DIST.	COUNTY	ROUTE	POST MILES TOTAL PROJECT	SHEET NO.	TOTAL SHEETS
03	Nev	5717		33	106

LICENSED ARCHITECT — DATE 7/30/07

LICENSED ARCHITECT Warren Lai No. C-17122 Exp. 8/30/09 STATE OF CALIFORNIA

1-26-09
PLANS APPROVAL DATE

The State of California or its officers or agents shall not be responsible for the accuracy or completeness of electronic copies of this plan sheet.

ACCESSIBILITY DESIGN APPROVAL STAMP
DOT / DES / OTA
03-318001
DISTRICT - EA
Reviewed by: YA WANG
Date: 10-27-08

CALIFORNIA STATE FIRE MARSHAL APPROVED
Approval of this plan does not authorize or approve any omission or deviation from applicable regulations. Final approval is subject to field inspection. One set of approved plans shall be available on the project site at all times.
Reviewed by: JEFFREY SCHWARTZ
Approval date: 1/11/10

SYMBOLS

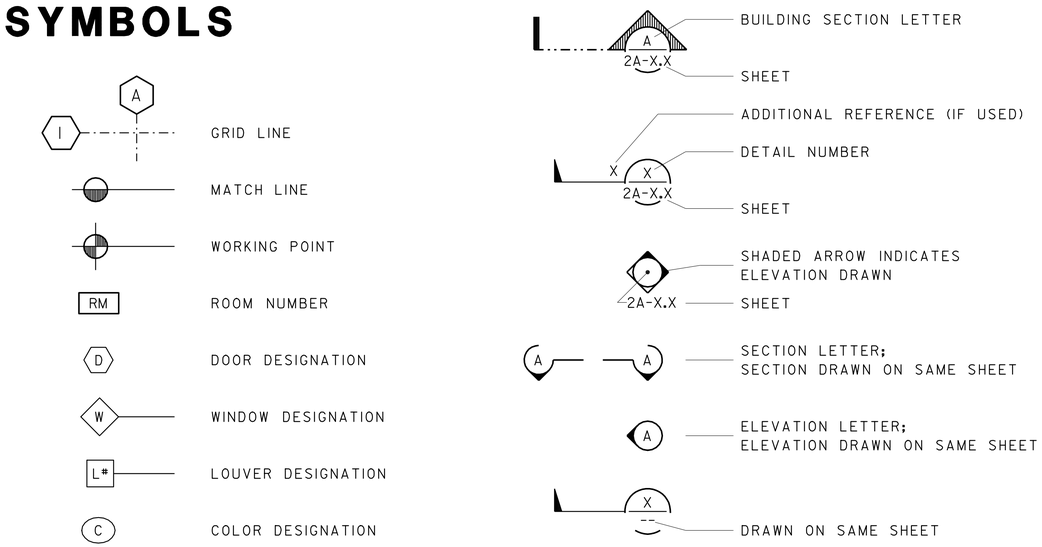

DESIGN CRITERIA

LIST OF 2007 CALIFORNIA CODE OF REGULATION (CCR)

2007 BUILDING STANDARD ADMINISTRATIVE CODE : PART 1, TITLE 24 CCR
2007 CALIFORNIA BUILDING CODE (CBC) ,PART 2 , TITLE 24 CCR
2007 CALIFORNIA ELECTRICAL CODE (CEC) ,PART 3,TITLE 24 CCR
2007 CALIFORNIA MECHANICAL CODE (CMC) , PART 4 , TITLE 24 CCR
2007 CALIFORNIA PLUMBING CODE (CPC),PART 5 , TITLE 24 CCR
2007 CALIFORNIA FIRE CODE (CFC) , PART 9 , TITLE 24 , CCR
2007 CALIFORNIA REFERENCED STANDARDS CODE , PART 12 , TITLE 24 , CCR
TITLE 19,CCR , PUBLIC SAFETY,STATE FIRE MARSHAL REGULATIONS
2007 CALIFORNIA ENERGY STANDARDS
CURRENT EDITION OF AMERICANS WITH DISABILITIES ACT

	BY	CHECKED
DESIGN	Gary Harris	
DETAILS	Gary Harris	
QUANTITIES		

STATE OF CALIFORNIA
DEPARTMENT OF TRANSPORTATION

DIVISION OF ENGINEERING SERVICES
ARCHITECTURAL AND STRUCTURAL DESIGN

BRIDGE NO. 17M5717
POST MILE 15.9

NEVADA CITY MAINTENANCE STATION RESIDENT MECHANIC'S FACILITY
ARCHITECTURAL ABBREVIATIONS AND SYMBOLS

SHEET **A0-1**

ORIGINAL SCALE IN INCHES FOR REDUCED PLANS 0 1 2 3

CU 03225
EA 318001

DISREGARD PRINTS BEARING EARLIER REVISION DATES →
REVISION DATES (PRELIMINARY STAGE ONLY)
SHEET 1 OF 20

a0_1.dgn
DS OSD Imperial Rev. 11/98 20-JAN-2010 13:55
20-JAN-2010 13:55
a0_1.dgn

DIST.	COUNTY	ROUTE	POST MILES TOTAL PROJECT	SHEET NO.	TOTAL SHEETS
03	Nev	5717		34	106

LICENSED ARCHITECT — DATE 7/30/07

LICENSED ARCHITECT Warren Lai No. C-17122 Exp. 8/30/09 STATE OF CALIFORNIA

1-26-09
PLANS APPROVAL DATE

The State of California or its officers or agents shall not be responsible for the accuracy or completeness of electronic copies of this plan sheet.

FINISH SCHEDULE

BUILDING NAME	ROOM NUMBER	ROOM NAME	FLOOR: CERAMIC TILE	FLOOR: VINYL COMPOSITION TILE	FLOOR: CONCRETE	BASE: RESILIENT BASE	BASE: WOOD BASE	BASE: CERAMIC TILE BASE 3/8" RADIUS COVED BASE	WALLS WEST WALL: GYPSUM BOARD	WEST WALL: CERAMIC TILE	WEST WALL: PLYWOOD	WEST WALL: CMU	SOUTH WALL: GYPSUM BOARD	SOUTH WALL: CERAMIC TILE	SOUTH WALL: PLYWOOD	SOUTH WALL: CMU	EAST WALL: GYPSUM BOARD	EAST WALL: CERAMIC TILE	EAST WALL: PLYWOOD	EAST WALL: CMU	NORTH WALL: GYPSUM BOARD	NORTH WALL: CERAMIC TILE	NORTH WALL: PLYWOOD	NORTH WALL: CMU	CEILING: GYPSUM BOARD	CEILING: EXPOSED STL/WD BEAMS & JOISTS	CEILING: CEILING HEIGHT	NOTES
	1	MECHANIC'S BAY			4	N/A						6				6				6				6		1	VARIES	BATT INSUL TO BE WRAPPED UNDER WD BLKG AT ROOF
	2	OFFICE/PARTS ROOM		3		2			1				1				1				1				1		10'-0"	
	3	UTILITY ROOM			4		1		1		1		1				1				1				1		10'-0"	
	4	UNISEX RESTROOM	5					5	1	5			1	5			1	5			1	5			1		10'-0"	
	5	REPAIR BAYS 1 & 2			4		1				1	6				6				6				6		1	VARIES	BATT INSUL TO BE WRAPPED UNDER WD BLKG AT ROOF

ACCESSIBILITY DESIGN APPROVAL STAMP
DOT / DES / OTA
03-318001
DISTRICT - EA
Reviewed by: YA WANG
Date: 10-27-08

CALIFORNIA STATE FIRE MARSHAL APPROVED
Approval of this plan does not authorize or approve any omission or deviation from applicable regulations. Final approval is subject to field inspection. One set of approved plans shall be available on the project site at all times.
Reviewed by: JEFFREY SCHWARTZ
Approval date: 1/11/10

COLORS ARE SELECTED FROM KELLY-MOORE COLOR XPERIENCE SELECTION PALLET

COLOR NO.	FACTORY NAME & NUMBER
1	COLOR #20 WESTERN ACOUSTIC
2	COLOR #KM4184-5 FRIARS CLOAK
3	COLOR #AC208-Y HAPPY HOLIDAY
4	COLOR #AC212-5 MONTANA DUST

COATING SYSTEMS

MATERIAL	COLOR No.	COATING SYSTEM
DOOR LOUVERS	2	1 or 2
BUILDING LOUVERS	2	1 or 2
MISCELLANEOUS EXPOSED STEEL	1	4
GYPSUM BOARD WALLS	1	3
GYPSUM BOARD CEILINGS	1	3
HOLLOW METAL DOORS	1	4
PRESSED METAL FRAMES	2	4
MISCELLANEOUS WOOD TRIM	2	5
PLYWOOD WAINSCOT	1	5
WOOD WINDOW STOOLS	2	5
STEEL GUARD POSTS	3 4	2
SMOOTH FACE CMU	BOTH SMOOTH FACE AND SPLITFACE CMU TO HAVE SAME INTEGRAL COLOR FINISH.	
SPLITFACE CMU		

NOTE: CMU INTEGRAL COLOR TO BE SELECTED BY ENGINEER FROM MANUFACTURER'S STANDARD COLOR LINE.

FINISH NOTES

MANUFACTURER'S DESIGNATIONS ARE USED TO INDICATE COLOR, PATTERN, TYPE, CONFIGURATION ETC. AND ARE NOT INTENDED TO SHOW A PREFERENCE FOR A PARTICULAR BRAND.
OTHER PRODUCTS MAY BE SUBMITTED FOR APPROVAL IF EQUAL IN COLOR AND TEXTURE.

1. VINYL COMPOSITION TILE FLOORING
   - AZROCK, CORTINA COLORS, #V-863, COLOR: SAND DRIFT
   - ARMSTRONG, IMPERIAL TEXTURE, #51905, COLOR: HAZELNUT
2. VINYL/RUBBER WALL BASE
   - BURKE, #203, BEIGE
   - ROPPE, #P171, SANDSTONE
3. CERAMIC FLOOR TILE
   - AMERICAN OLEAN, #C-12 PAPYRUS
   - DAL-TILE, #DK-335 PORCELAIN
4. CERAMIC BASE TILE
   - AMERICAN OLEAN, #615 TOFFEE
   - DAL-TILE #D-736 FAWN
5. WORK BENCHES (ADJUSTABLE
   - EDSAL, #1009-M - GRAY
   - PENCO, #34427 - GRAY
6. FREE-STANDING METAL SHELVING UNITS
   PENCO, #1H7015, #1H7025, #1H7085
   COLOR: 028 GRAY (INCLUDE END BRACING KITS)
   EDSAL, #RS1501, #RS1500, #RS1504
   COLOR: GRAY
7. STANDING SEAM METAL ROOFING
   - VICWEST, INC., VICLOC 324 STANDING SEAM ROOFING PANEL - COLOR: SANDSTONE
   - ECI BUILDING COMPONENTS, SA SERIES STANDING SEAM ROOFING PANEL - COLOR: SANDSTONE
   - FLEXOSPAN, FSS-1.5 STANDING SEAM ROOFING PANEL - COLOR: SANDSTONE

NOTE The Contractor shall verify all controlling dimensions before ordering or fabricating any material

DOOR SCHEDULE

DOOR No.	NOMINAL DOOR OPENING SIZE: WIDTH	HEIGHT	THICK	DOOR TYPE	HDWR GROUP	LABEL	DOOR: MAT	LITE	LOUVER	NAME PLATE	FRAME: MAT	SIZE	DETAILS: HEAD	JAMB	SILL	REMARKS
1	3'-0"	7'-0"	1 3/4"	A	1	—	HM	SIDE LITE		MECHANIC'S BAY	PMF	8 3/4"	2 A-7	4 A-7	5 A-7	
2	NOT USED															
3	3'-0"	7'-0"	1 3/4"	A	1	—	HM	—		REPAIR BAYS	PMF	8 3/4"	2 A-7	4 A-7	5 A-7	
4	3'-0"	7'-0"	1 3/4"	A	5	—	HM	—		REPAIR BAYS	PMF	8 3/4"	2 A-7	4 A-7	5 A-7	
5	3'-0"	7'-0"	1 3/4"	A	1	—	HM	—		NO ENTRY	PMF	8 3/4"	8 A-7	9 A-7	10 A-7	EXIT DOOR ONLY HARDWARE NO ENTRY
6	3'-0"	7'-0"	1 3/4"	A	3	—	HM	—		SEE DETAILS 1,3,4,5 A0-3.3	PMF	8 3/4"	2 A-7	4 A-7	6 A-7	
7	3'-6"	7'-0"	1 3/4"	A	2	—	HM	—	30"X24" FIXED MET LOUVER	UTILITY ROOM	PMF	8 3/4"	2 A-7	4 A-7	5 A-7	DELETE THRESHOLD AT DOOR 7
8	3'-6"	7'-0"	1 3/4"	A	6	—	HM	SIDE LITE		OFFICE	PMF	8 3/4"	2 A-7	4 A-7	7 A-7	
9	PAIR 3'-0"	7'-0"	1 3/4"	A	4	—	HM	SIDE LITE		REPAIR BAYS / MECHANIC'S BAY	PMF	8 3/4"	2 A-7	4 A-7	7 A-7	
10	14'-0"	14'-0"	2"	B	--	—	STL	YES		N/A	STL	—	11 A-7	12 A-7	13 A-7	SEE SPECIAL PROVISIONS FOR OVERHEAD SECTIONAL DOOR HARDWARE REQUIREMENTS
11	16'-0"	16'-0"	2"	B	--	—	STL	YES		N/A	STL	—	11 A-7	12 A-7	13 A-7	
12	16'-0"	16'-0"	2"	B	--	—	STL	YES		N/A	STL	—	11 A-7	12 A-7	13 A-7	

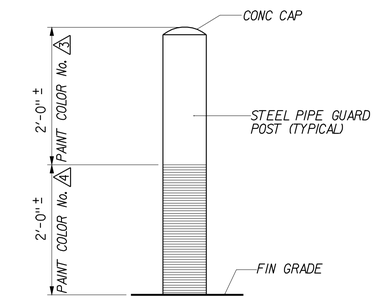

2 GUARD POST FINISH DETAIL
NOT TO SCALE

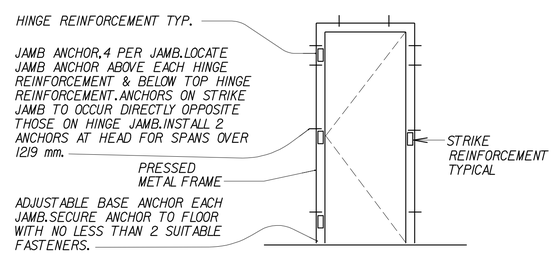

1 DOOR FRAME ANCHORAGE
TYPICAL
NOT TO SCALE

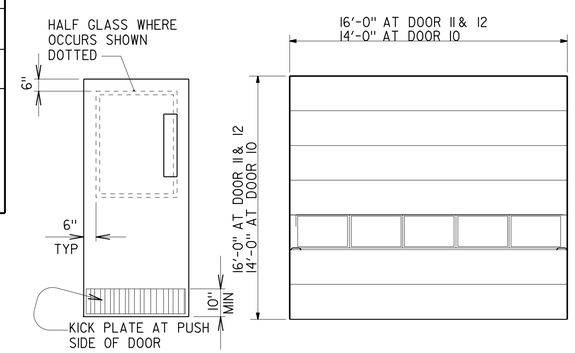

A HOLLOW METAL DOOR

B MOTOR OPERATED, INSULATED, OVERHEAD SECTIONAL STEEL DOOR

DOOR TYPES
NOT TO SCALE

DESIGN	BY Gary Harris	CHECKED	
DETAILS	BY Gary Harris	CHECKED	
QUANTITIES	BY	CHECKED	

STATE OF CALIFORNIA
DEPARTMENT OF TRANSPORTATION

DIVISION OF ENGINEERING SERVICES
ARCHITECTURAL AND STRUCTURAL DESIGN

BRIDGE NO. 17M5717
POST MILE 15.9

NEVADA CITY MAINTENANCE STATION RESIDENT MECHANIC'S FACILITY
FINISH AND DOOR SCHEDULES

SHEET A0-2.1

a0_2_1.dgn
DS OSD Imperial Rev. 11/98 20-JAN-2010 13:55

ORIGINAL SCALE IN INCHES FOR REDUCED PLANS 0 1 2 3

CU 03225
EA 318001

DISREGARD PRINTS BEARING EARLIER REVISION DATES
REVISION DATES (PRELIMINARY STAGE ONLY)

SHEET 2 OF 20

20-JAN-2010 13:55
a0_2_1.dgn

DIST.	COUNTY	ROUTE	POST MILES TOTAL PROJECT	SHEET NO.	TOTAL SHEETS
03	Nev	5717		35	106

LICENSED ARCHITECT — DATE 7/30/07

LICENSED ARCHITECT Warren Lai No. C-17122 Exp. 8/30/09 STATE OF CALIFORNIA

1-26-09
PLANS APPROVAL DATE

The State of California or its officers or agents shall not be responsible for the accuracy or completeness of electronic copies of this plan sheet.

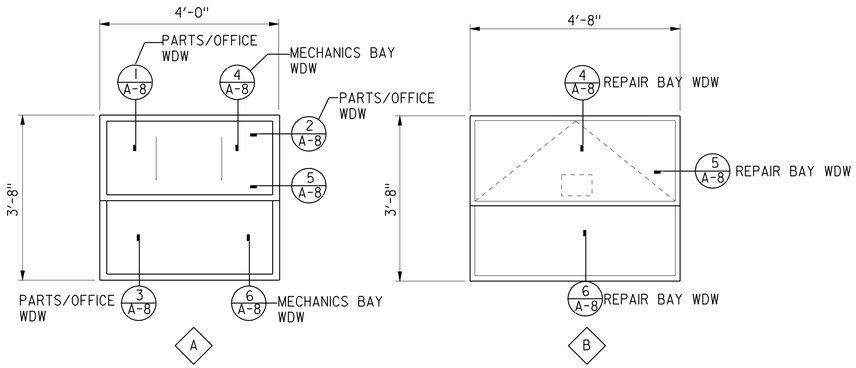

SINGLE HUNG WINDOW W/ DUAL INSUL GLASS IN DARK BRONZE ALUM FRAME AND INSECT SCREEN

PROJECT-OUT, DUAL INSULATED ALUMINUM WINDOW W/ INTERIOR MOUNTED INSECT SCREEN W/ WICKET, DUAL INSULATED GLASS IN DARK BRONZE ALUM FRAME

WINDOW SCHEDULE

NTS

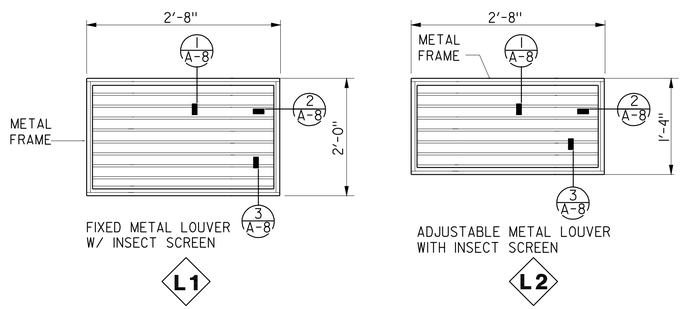

LOUVER SCHEDULE

NTS

SIGN GRAPHICS SHALL CONFORM TO CBC SECTION 1011.5.1

PROVIDE SELF-LUMINOUS EXIT SIGNS AT FOUR EXIT DOOR LOCATIONS. EXIT SIGN ILLUMINATION SHALL CONFORM TO CBC SECTION 1011.5.2

MOUNT SIGN ABOVE EXIT DOOR

1 SELF-LUMINOUS EXIT SIGN

NTS

ACCESSIBILITY DESIGN APPROVAL STAMP
DOT / DES / OTA
03-318001
DISTRICT - EA
Reviewed by: YA WANG
Date: 10-27-08

CALIFORNIA STATE FIRE MARSHAL APPROVED
Approval of this plan does not authorize or approve any omission or deviation from applicable regulations. Final approval is subject to field inspection. One set of approved plans shall be available on the project site at all times.
Reviewed by: JEFFREY SCHWARTZ
Approval date: 1/11/10

NOTE *The Contractor shall verify all controlling dimensions before ordering or fabricating any material*

	BY	CHECKED
DESIGN	Gary Harris	
DETAILS	Gary Harris	
QUANTITIES		

STATE OF CALIFORNIA
DEPARTMENT OF TRANSPORTATION

DIVISION OF ENGINEERING SERVICES
ARCHITECTURAL AND STRUCTURAL DESIGN

BRIDGE NO. 17M5717
POST MILE 15.9

NEVADA CITY MAINTENANCE STATION
RESIDENT MECHANIC'S FACILITY
WINDOW AND LOUVER SCHEDULES

SHEET A0-2.2

a0_2_2.dgn
DS OSD Imperial Rev. 11/98 20-JAN-2010 13:56

ORIGINAL SCALE IN INCHES FOR REDUCED PLANS 0 1 2 3

CU 03225
EA 318001

DISREGARD PRINTS BEARING EARLIER REVISION DATES →
REVISION DATES (PRELIMINARY STAGE ONLY)

SHEET 3 OF 20

20-JAN-2010 13:56
a0_2_2.dgn

DIST.	COUNTY	ROUTE	POST MILES TOTAL PROJECT	SHEET NO.	TOTAL SHEETS
03	Nev	5717		36	106

LICENSED ARCHITECT — 8-20-08 DATE

LICENSED ARCHITECT Y.A. WANG No. C14891 Exp. 11-30-09 STATE OF CALIFORNIA

1-26-09
PLANS APPROVAL DATE

The State of California or its officers or agents shall not be responsible for the accuracy or completeness of electronic copies of this plan sheet.

ACCESSIBILITY DESIGN APPROVAL STAMP
DOT / DES / OTA
03-318001
DISTRICT - EA
Reviewed by: YA WANG
Date: 10-27-08

CALIFORNIA STATE FIRE MARSHAL APPROVED
Approval of this plan does not authorize or approve any omission or deviation from applicable regulations. Final approval is subject to field inspection. One set of approved plans shall be available on the project site at all times.
Reviewed by: JEFFREY SCHWARTZ
Approval date: 1/11/10

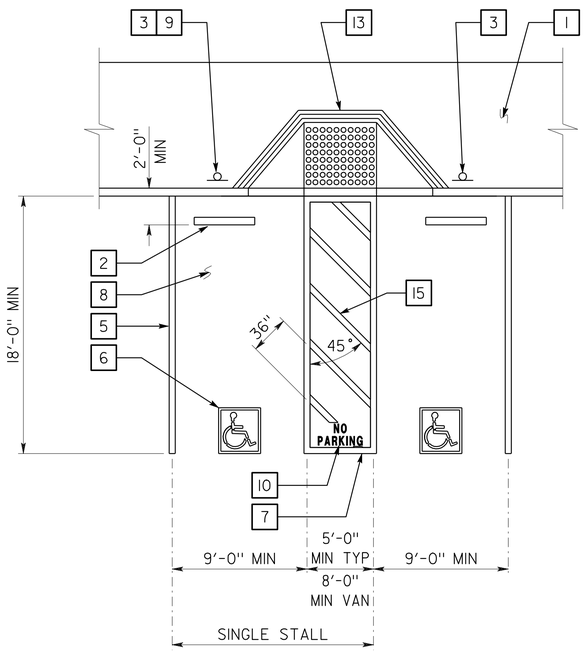

1 ACCESSIBLE PARKING STALL

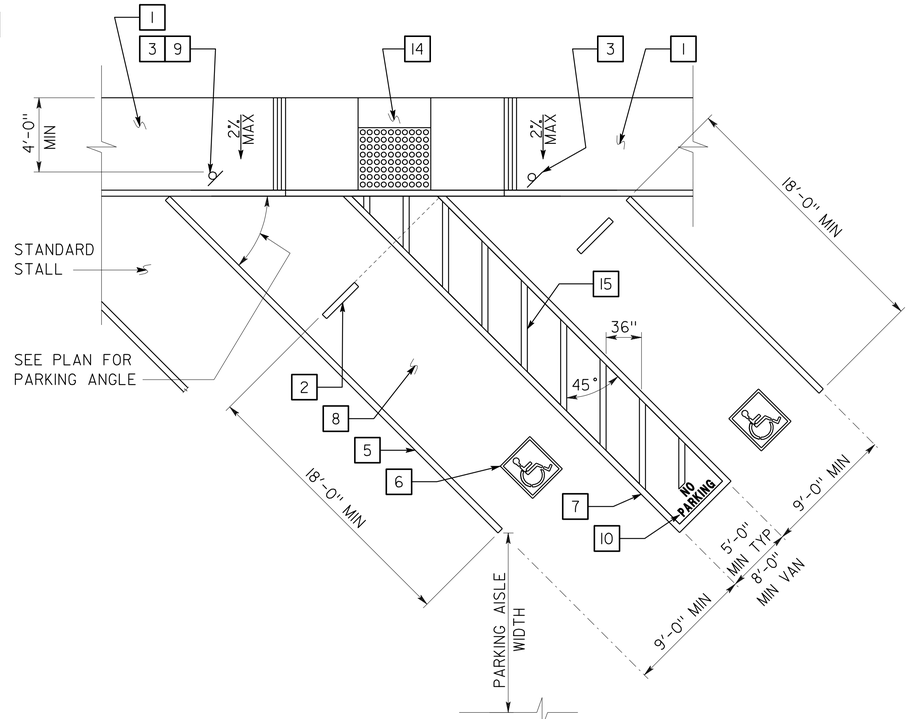

2 DIAGONAL ACCESSIBLE PARKING STALL

SEE PLAN FOR ANY VARIATION OF DIAGONAL PARKING

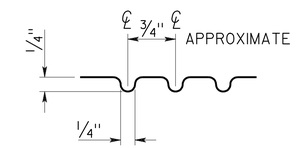

3 GROOVE DETAIL

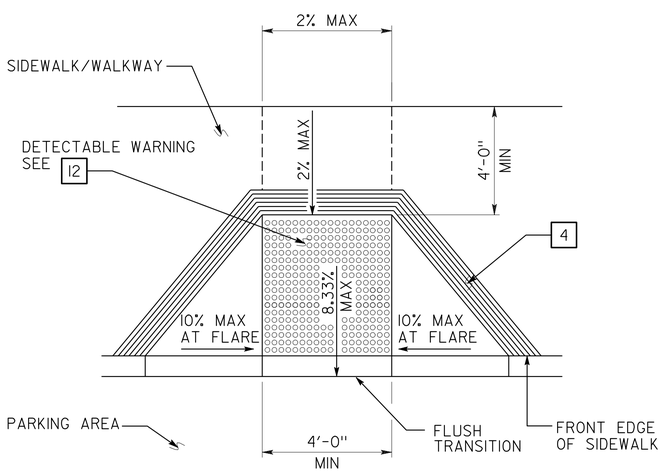

4 PERPENDICULAR CURB RAMP

NOTE *The Contractor shall verify all controlling dimensions before ordering or fabricating any material*

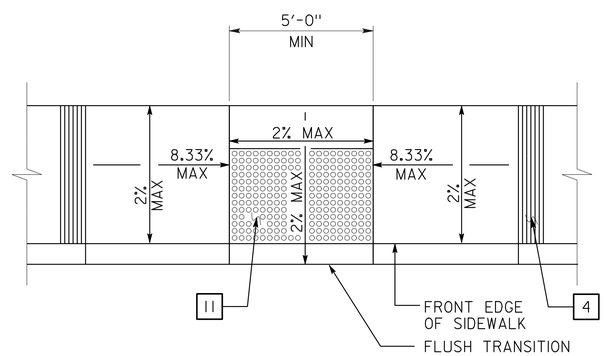

5 PARALLEL CURB RAMP

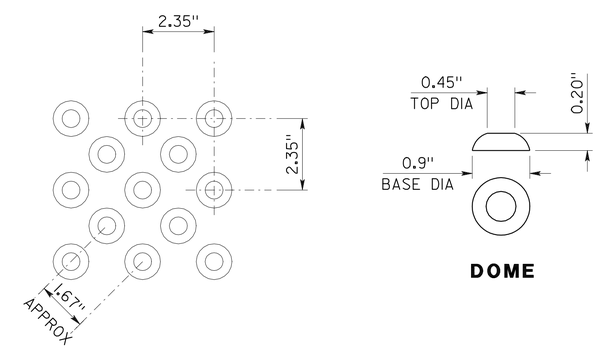

6 DETECTABLE WARNING - TRUNCATED DOMES

OFFSET PATTERN SHOWN MAY BE RE-ORIENTED INTO IN-LINE PATTERN WHERE DOMES ARE ALIGNED IN THE DIRECTION OF TRAVEL.

KEYED NOTE LEGEND FOR DETAILS 1 & 2

1. CONCRETE WALKWAY (WHERE OCCURS) SEE PLANS FOR WIDTH, LAYOUT (MAY VARY), FINISH, JOINTS AND ELEVATIONS.
2. PARKING BUMPER (AWAY FROM ACCESS AISLE). SEE SPECIFICATIONS.
3. ACCESSIBLE PARKING SPACE SIGNAGE SEE DETAIL 1 ON SHEET A0-3.2.
4. 1' WIDE GROOVED BORDER ON LEVEL SURFACE TYP AT RAMP PERIMETER. SEE DETAIL 3 ON THIS SHEET.
5. 4" WIDE WHITE PARKING STALL DESIGNATION STRIPE. SEE SITE PLAN(S) FOR ADDITIONAL STALL STRIPING. SEE SPECIFICATIONS FOR PAINTING.
6. ACCESSIBLE PARKING SURFACE IDENTIFICATION PAINTED ON PAVEMENT. SEE DETAIL 6 ON SHEET A0-3.2.
7. 4" WIDE BLUE BORDER DESIGNATION NON-PARKING ACCESS AISLE TO CURB RAMP
8. MAXIMUM SLOPE ON PARKING STALL PAVED AREA TO BE 2%.
9. VAN ACCESSIBLE SIGNAGE. SEE DETAIL 2 ON SHEET A0-3.2. ACCESS AISLE SHALL BE ON PASSENGER SIDE ONLY.
10. "NO PARKING" IN MIN 12" HIGH WHITE LETTERS TO BE PLACED WITHIN ACCESS AISLE TO CURB RAMP SEE DETAIL 7 ON SHEET A0-3.2.
11. LEVEL LANDING - 2% MAX SLOPE W/ 36" DEEP DETECTABLE WARNINGS ADJOINING ACCESS AISLE OR VEHICULAR WAY. SEE DETAIL 6 ON THIS SHEET
12. DETECTABLE WARNING TO EXTEND FULL WIDTH AND DEPTH OF CURB RAMP. SEE DETAIL 6 ON THIS SHEET.
13. CURB RAMP. SEE DETAIL 4 ON THIS SHEET. ALSO SEE PLANS FOR WIDTH AND LAYOUT (MAY VARY).
14. CURB RAMP. SEE DETAIL 5 ON THIS SHEET. ALSO SEE PLANS FOR WIDTH AND LAYOUT (MAY VARY).
15. 4" WIDE WHITE HATCHED LINES TO CONTRAST WITH ASPHALT SURFACE. USE BLUE HATCHED LINES FOR LIGHT-COLOR CONCRETE SURFACE.

DETAILS

NO SCALE UNLESS OTHERWISE NOTED

NOTE: SPECIFIC DETAILS OR NOTES ON OTHER SHEETS SHALL PREVAIL OVER STANDARD DETAILS AND NOTES ON THIS SHEET

STANDARD DRAWING
FILE NO. __-__-_
DRAWING DATE 08-08
DESIGN BY D. ALSEY CHECKED Y.A. WANG
DETAILS BY D. GOOD CHECKED Y.A. WANG
SUBMITTED BY Y.A. WANG
APPROVED R E Travis DESIGN SUPERVISOR

STATE OF CALIFORNIA DEPARTMENT OF TRANSPORTATION

DIVISION OF ENGINEERING SERVICES ARCHITECTURAL AND STRUCTURAL DESIGN

BRIDGE NO. 17M5717
POST MILE 15.9

NEVADA CITY MAINTENANCE STATION RESIDENT MECHANIC'S FACILITY
ACCESSIBILITY STANDARD DETAILS

SHEET A0-3.1

a0_3_1.dgn
DS OSD Imperial Rev. 11/98 20-JAN-2010 13:56

ORIGINAL SCALE IN INCHES FOR REDUCED PLANS 0 1 2 3

CU 03225
EA 318001

DISREGARD PRINTS BEARING EARLIER REVISION DATES
REVISION DATES (PRELIMINARY STAGE ONLY) SHEET OF

20-JAN-2010 13:56
a0_3_1.dgn

DIST.	COUNTY	ROUTE	POST MILES TOTAL PROJECT	SHEET NO.	TOTAL SHEETS
03	Nev	5717		37	106

LICENSED ARCHITECT — DATE 8-20-08

LICENSED ARCHITECT Y.A. WANG No. C14891 Exp. 11-30-09 STATE OF CALIFORNIA

1-26-09
PLANS APPROVAL DATE

The State of California or its officers or agents shall not be responsible for the accuracy or completeness of electronic copies of this plan sheet.

ACCESSIBILITY DESIGN APPROVAL STAMP
DOT / DES / OTA
03-318001
DISTRICT - EA
Reviewed by: YA WANG
Date: 10-27-08

CALIFORNIA STATE FIRE MARSHAL APPROVED
Approval of this plan does not authorize or approve any omission or deviation from applicable regulations. Final approval is subject to field inspection. One set of approved plans shall be available on the project site at all times.
Reviewed by: JEFFREY SCHWARTZ
Approval date: 1/11/10

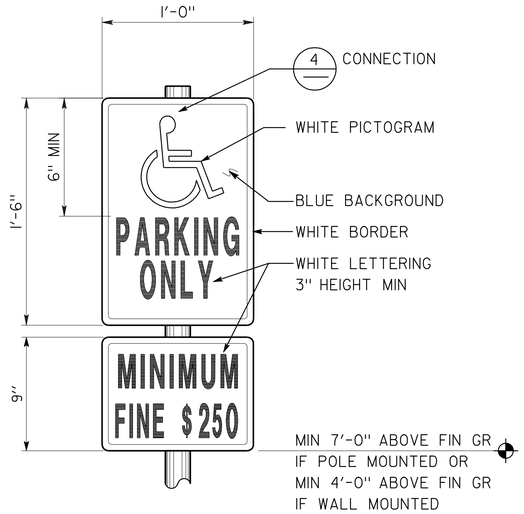

1 ACCESSIBLE PARKING SIGN

REFER TO SITE PLAN FOR LOCATIONS
COMBO SIGN MAY BE USED

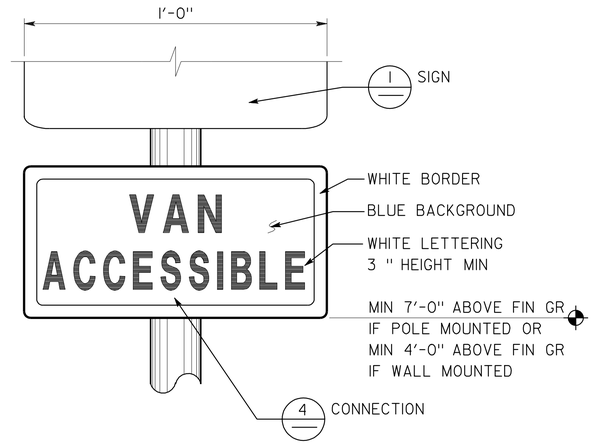

2 ACCESSIBLE VAN PARKING SIGN

REFER TO SITE PLAN FOR LOCATIONS
COMBO VAN ACCESSIBLE SIGN AND SEPARATE FINE PLAQUE MAY BE USED

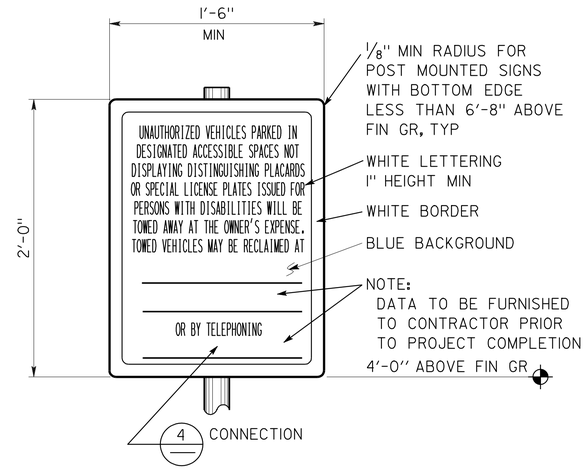

3 PARKING AREA ENTRANCE SIGN

REFER TO SITE PLAN FOR LOCATIONS
COLORS MAY VARY

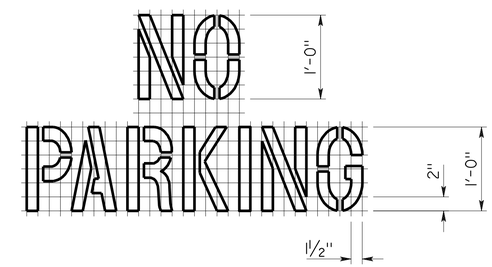

7 ACCESS AISLE PAVEMENT MARKING

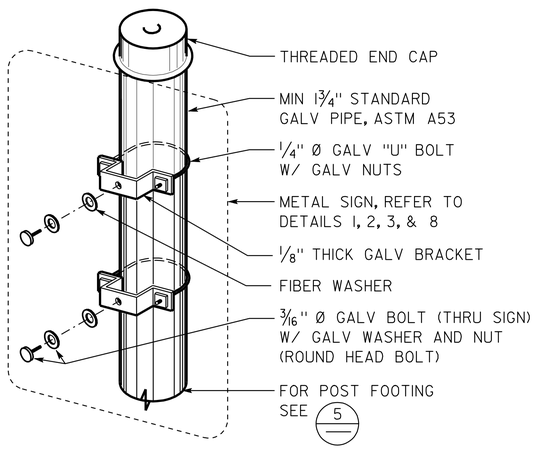

4 SIGN CONNECTION

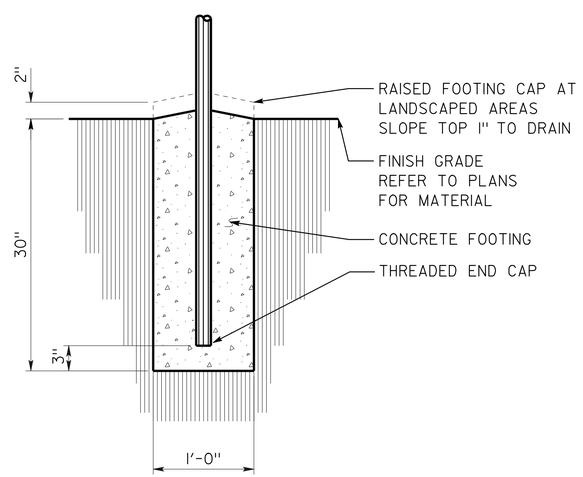

5 SIGN POST FOOTING

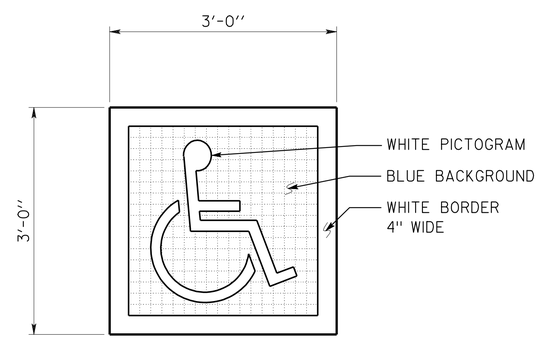

6 ACCESSIBLE PARKING SURFACE IDENTIFICATION

REFER TO DETAILS 1 AND 2 ON SHEET A0-3.1 FOR LOCATIONS

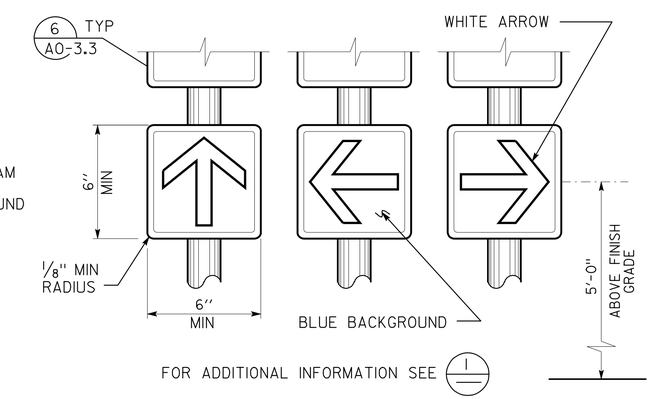

8 DIRECTIONAL SIGNS

REFER TO SITE PLAN FOR LOCATIONS
WALL OR DOOR MOUNTED SIGNS MAY BE USED
COLORS MAY VARY

NOTE *The Contractor shall verify all controlling dimensions before ordering or fabricating any material*

DETAILS

NO SCALE UNLESS OTHERWISE NOTED

NOTE: SPECIFIC DETAILS OR NOTES ON OTHER SHEETS SHALL PREVAIL OVER STANDARD DETAILS AND NOTES ON THIS SHEET

STANDARD DRAWING				
FILE NO. __-__-_	DESIGN	BY D. ALSEY	CHECKED Y.A. WANG	APPROVED R.E. Travis DESIGN SUPERVISOR
DRAWING DATE 08-08	DETAILS	BY D. GOOD	CHECKED Y.A. WANG	
	SUBMITTED BY Y.A. WANG			

STATE OF CALIFORNIA DEPARTMENT OF TRANSPORTATION

DIVISION OF ENGINEERING SERVICES ARCHITECTURAL AND STRUCTURAL DESIGN

BRIDGE NO. 17M5717
POST MILE 15.9

NEVADA CITY MAINTENANCE STATION RESIDENT MECHANIC'S FACILITY

ACCESSIBILITY STANDARD DETAILS

SHEET A0-3.2

a0_3_2.dgn
DS OSD Imperial Rev. 11/98 20-JAN-2010 13:56

ORIGINAL SCALE IN INCHES FOR REDUCED PLANS 0 1 2 3

CU 03225
EA 318001

DISREGARD PRINTS BEARING EARLIER REVISION DATES → REVISION DATES (PRELIMINARY STAGE ONLY) SHEET OF

20-JAN-2010 13:56
a0_3_2.dgn

DIST.	COUNTY	ROUTE	POST MILES TOTAL PROJECT	SHEET NO.	TOTAL SHEETS
03	Nev	5717		38	106

LICENSED ARCHITECT — 8-20-08 DATE

LICENSED ARCHITECT Y.A. WANG No. C14891 Exp. 11-30-09 STATE OF CALIFORNIA

1-26-09
PLANS APPROVAL DATE

The State of California or its officers or agents shall not be responsible for the accuracy or completeness of electronic copies of this plan sheet.

ACCESSIBILITY DESIGN APPROVAL STAMP
DOT / DES / OTA
03-318001
DISTRICT - EA
Reviewed by: YA WANG
Date: 10-27-08

CALIFORNIA STATE FIRE MARSHAL APPROVED
Approval of this plan does not authorize or approve any omission or deviation from applicable regulations. Final approval is subject to field inspection. One set of approved plans shall be available on the project site at all times.
Reviewed by: JEFFREY SCHWARTZ
Approval date: 1/11/10

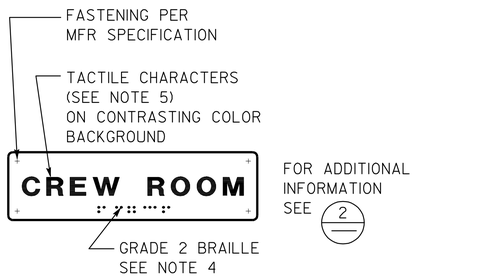

1 ROOM IDENTIFICATION SIGN
INSTALL PER DETAIL 5
TEXT VARIES
SEE PLANS, EXT ELEVATIONS, OR DOOR SCHEDULE FOR LOCATIONS AND TEXT

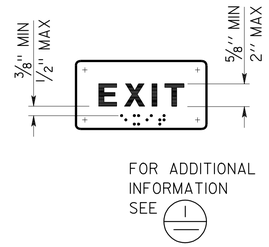

2 EXIT SIGN
INSTALL PER DETAIL 5
TEXT MAY VARY
SEE PLANS, OR DOOR SCHEDULE FOR LOCATIONS AND TEXT

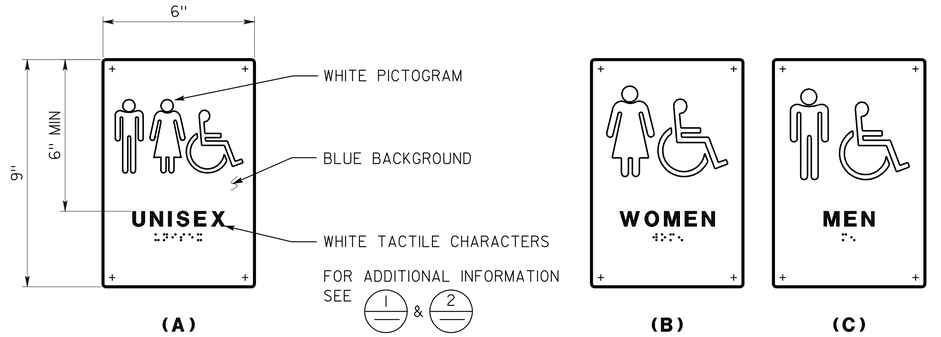

3 RESTROOM SIGNS
INSTALL PER DETAIL 5

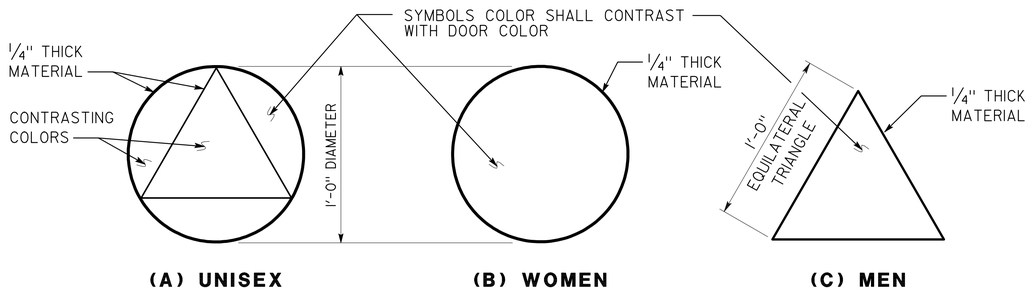

4 RESTROOM IDENTIFICATION SYMBOLS
INSTALL PER DETAIL 5
ANY PICTOGRAM AND TEXT ARE NOT REQUIRED

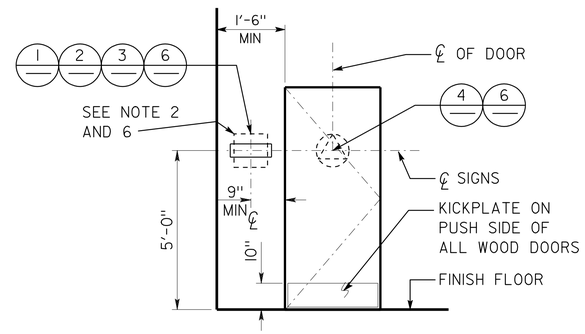

5 SIGN LOCATIONS
REFER TO SIGNAGE NOTES FOR ADDITIONAL INFORMATION

SIGNAGE NOTES:

1. LOCATE ROOM IDENTIFICATION SIGNS, EXIT SIGNS, AND RESTROOM SIGNS ON WALL ADJACENT TO DOOR ON LATCH SIDE. IF WALL SPACE IS NOT AVAILABLE ON LATCH SIDE, LOCATE ON NEAREST ADJACENT WALL.
2. REFER TO SPECIFICATIONS FOR SIGN MATERIAL AND COLOR SELECTION. COLORS MAY VARY FROM DETAILS.
3. SEE DOOR SCHEDULE FOR TEXT AND SIGN LOCATIONS, UON.
4. GRADE 2 BRAILLE: DOTS SHALL BE 1/10" OC IN EACH CELL WITH 2/10" SPACE BETWEEN CELLS MEASURED FROM THE SECOND COLUMN OF DOTS IN THE FIRST CELL TO THE FIRST COLUMN OF DOTS IN THE SECOND CELL. DOTS SHALL BE RAISED A MINIMUM OF 1/40" ABOVE THE BACKGROUND.
5. TACTILE CHARACTERS SHALL BE UPPERCASE SANS SERIF RAISED 1/32" MIN WITH A WIDTH TO HEIGHT RATIO BETWEEN 3:5 AND 1:1 AND A STROKE WIDTH TO HEIGHT RATIO BETWEEN 1:5 AND 1:10.
6. PROVIDE 18"x18" MIN CLEAR FLOOR SPACE IN FRONT OF AND CENTERED ON THE SIGN.

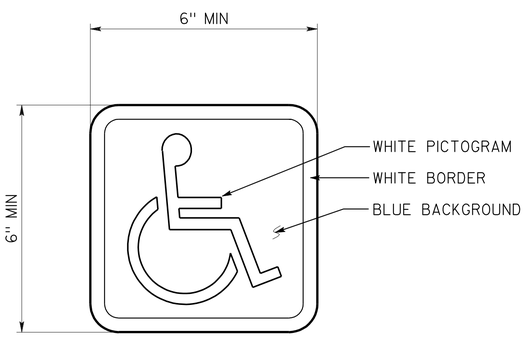

6 INTERNATIONAL SYMBOL OF ACCESSIBILITY
INSTALL PER DETAIL 5
SEE PLANS, EXT ELEVATIONS, OR SCHEDULE FOR SIGN LOCATIONS
SYMBOL MAY BE ON DOOR OR WALLS.
DECAL MAY BE USED ON DOORS OR SMOOTH WALLS

NOTE The Contractor shall verify all controlling dimensions before ordering or fabricating any material

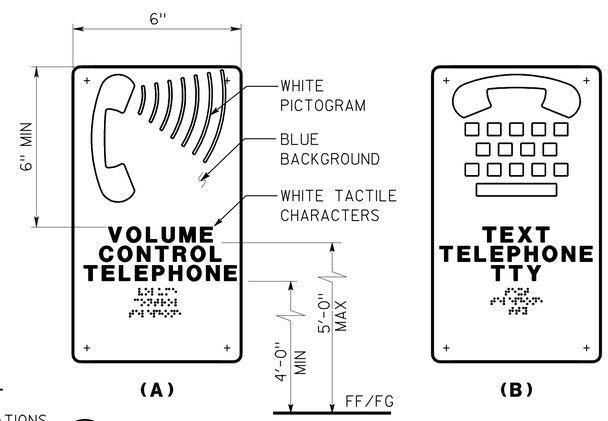

7 TELEPHONE SIGNS
TEXT MAY VARY
SEE PLANS OR EXT ELEVATIONS FOR SIGN LOCATIONS AND MOUNTING HEIGHTS

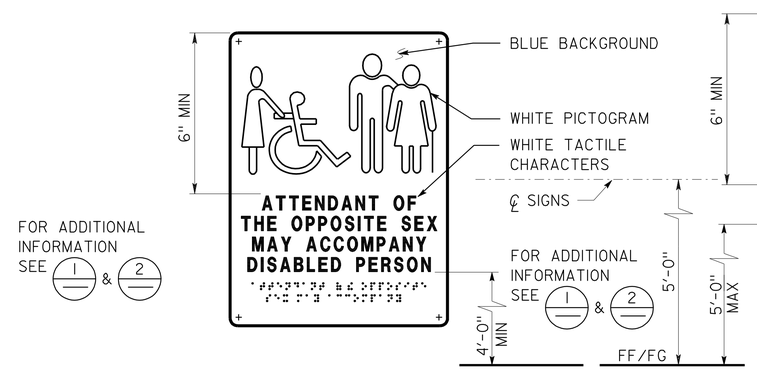

8 RESTROOM ACCOMPANY SIGN
SEE PLANS OR ELEVATIONS FOR LOCATIONS

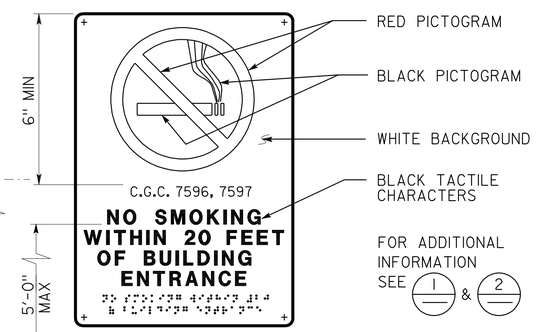

9 NO SMOKING SIGN
SEE PLANS OR EXTERIOR ELEVATIONS FOR LOCATIONS

DETAILS
NO SCALE UNLESS OTHERWISE NOTED

NOTE: SPECIFIC DETAILS OR NOTES ON OTHER SHEETS SHALL PREVAIL OVER STANDARD DETAILS AND NOTES ON THIS SHEET

STANDARD DRAWING
FILE NO. __-__-_
DRAWING DATE 08-08
DESIGN BY D. ALSEY CHECKED Y.A. WANG
DETAILS BY D. GOOD CHECKED Y.A. WANG
SUBMITTED BY Y.A. WANG
APPROVED R E Travis DESIGN SUPERVISOR

STATE OF CALIFORNIA DEPARTMENT OF TRANSPORTATION
DIVISION OF ENGINEERING SERVICES ARCHITECTURAL AND STRUCTURAL DESIGN
BRIDGE NO. 17M5717
POST MILE 15.9
NEVADA CITY MAINTENANCE STATION RESIDENT MECHANIC'S FACILITY
ACCESSIBILITY STANDARD DETAILS
SHEET A0-3.3

a0_3_3.dgn
DS OSD Imperial Rev. 11/98 20-JAN-2010 13:56
ORIGINAL SCALE IN INCHES FOR REDUCED PLANS 0 1 2 3
CU 03225
EA 318001
DISREGARD PRINTS BEARING EARLIER REVISION DATES
REVISION DATES (PRELIMINARY STAGE ONLY) SHEET OF

20-JAN-2010 13:56
a0_3_3.dgn

DIST.	COUNTY	ROUTE	POST MILES TOTAL PROJECT	SHEET NO.	TOTAL SHEETS
03	Nev	5717		39	106

LICENSED ARCHITECT — DATE 8-20-08

LICENSED ARCHITECT Y.A. WANG No. C14891 Exp. 11-30-09 STATE OF CALIFORNIA

1-26-09
PLANS APPROVAL DATE

The State of California or its officers or agents shall not be responsible for the accuracy or completeness of electronic copies of this plan sheet.

ACCESSIBILITY DESIGN APPROVAL STAMP
DOT / DES / OTA
03-318001
DISTRICT - EA
Reviewed by: YA WANG
Date: 10-27-08

CALIFORNIA STATE FIRE MARSHAL APPROVED
Approval of this plan does not authorize or approve any omission or deviation from applicable regulations. Final approval is subject to field inspection. One set of approved plans shall be available on the project site at all times.
Reviewed by: JEFFREY SCHWARTZ
Approval date: 1/11/10

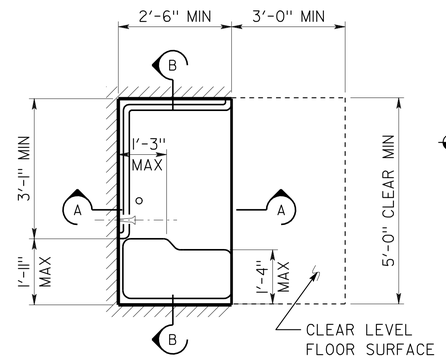

PLAN VIEW

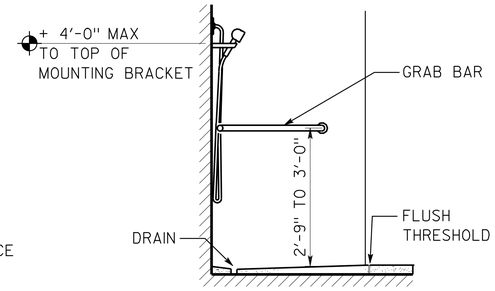

SECTION A-A

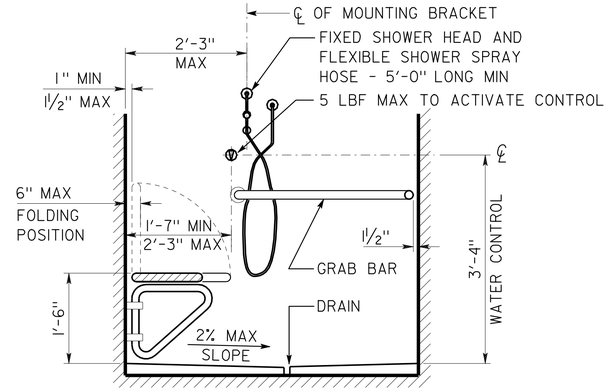

SECTION B-B

1 SHOWER STALL

OMIT AT SRRA SITES

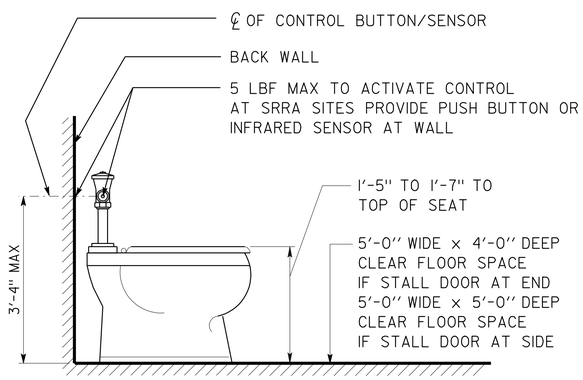

2 WATER CLOSET

SEE SPEC FOR FIXTURE TYPE

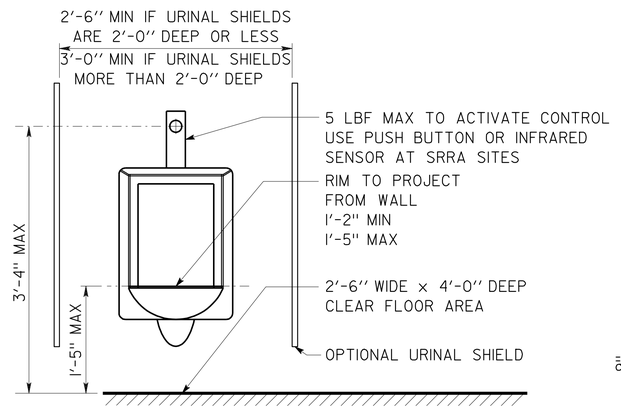

3 URINAL

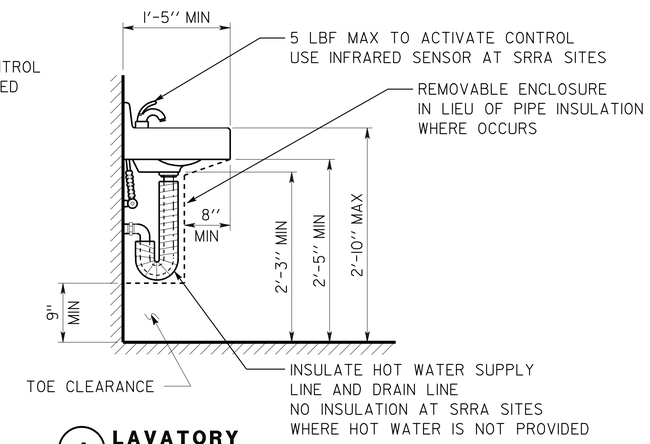

4 LAVATORY

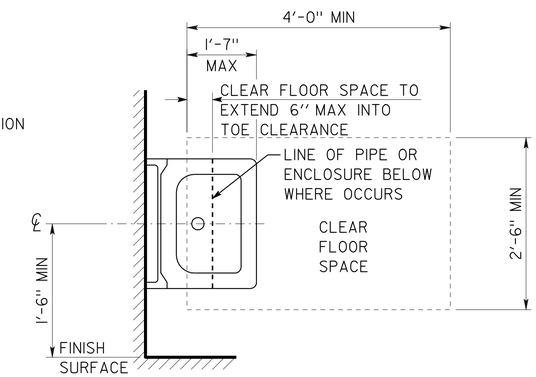

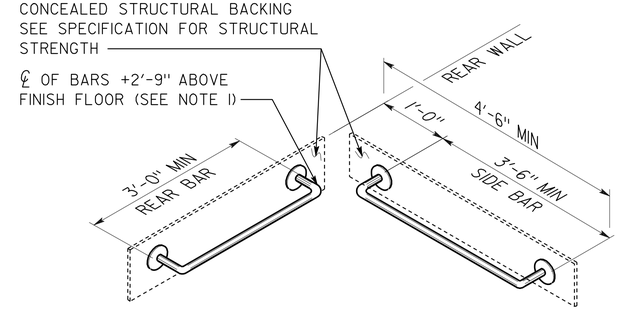

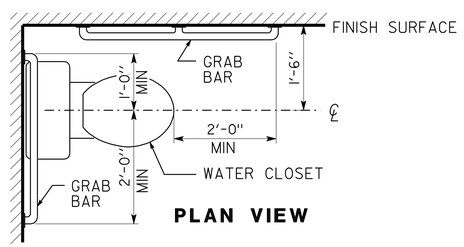

PLAN VIEW

GRAB BAR NOTE:

1. IF TANK TYPE TOILET IS USED, TOP OF REAR BAR MAY BE SET TO 3'-0" MAX ABOVE FINISH FLOOR. SIDE BAR TO REMAIN AS SHOWN ABOVE.
2. GRAB BARS TO BE 1¼" TO 1½" DIAMETER WITH CLEAR SPACE OF 1½" TO SMOOTH WALL SURFACE.

5 GRAB BARS/ WATER CLOSET

NOTE *The Contractor shall verify all controlling dimensions before ordering or fabricating any material*

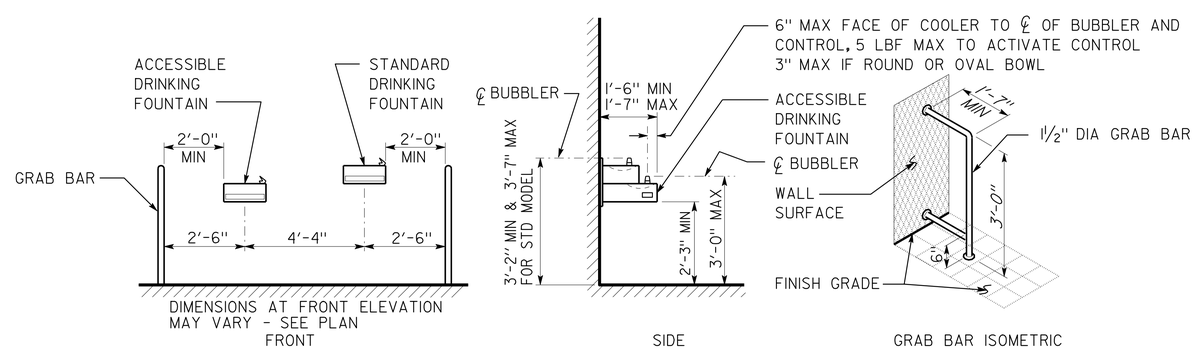

6 ELECTRIC WATER COOLER

FOR PROJECTS WITH APPROVED UNREASONABLE HARDSHIPS ONLY
FIXTURE TYPE MAY VARY

DETAILS

NO SCALE UNLESS OTHERWISE NOTED

NOTE: SPECIFIC DETAILS OR NOTES ON OTHER SHEETS SHALL PREVAIL OVER STANDARD DETAILS AND NOTES ON THIS SHEET

STANDARD DRAWING				
FILE NO. __-__-__	DESIGN BY D. ALSEY	CHECKED Y.A. WANG	APPROVED R E Travis DESIGN SUPERVISOR	
DRAWING DATE 08-08	DETAILS BY D. GOOD	CHECKED Y.A. WANG		
	SUBMITTED BY Y.A. WANG			

STATE OF CALIFORNIA DEPARTMENT OF TRANSPORTATION

DIVISION OF ENGINEERING SERVICES ARCHITECTURAL AND STRUCTURAL DESIGN

BRIDGE NO. 17M5717
POST MILE 15.9

NEVADA CITY MAINTENANCE STATION RESIDENT MECHANIC'S FACILITY

ACCESSIBILITY STANDARD DETAILS

SHEET A0-3.4

a0_3_4.dgn
DS OSD Imperial Rev. 11/98 20-JAN-2010 13:57

ORIGINAL SCALE IN INCHES FOR REDUCED PLANS 0 1 2 3

CU 03225
EA 318001

DISREGARD PRINTS BEARING EARLIER REVISION DATES

REVISION DATES (PRELIMINARY STAGE ONLY) SHEET OF

20-JAN-2010 13:57
a0_3_4.dgn

DIST.	COUNTY	ROUTE	POST MILES TOTAL PROJECT	SHEET NO.	TOTAL SHEETS
03	Nev	5717		40	106

LICENSED ARCHITECT — DATE 8-20-08

LICENSED ARCHITECT Y.A. WANG No. C14891 Exp. 11-30-09 STATE OF CALIFORNIA

1-26-09
PLANS APPROVAL DATE

The State of California or its officers or agents shall not be responsible for the accuracy or completeness of electronic copies of this plan sheet.

ACCESSIBILITY DESIGN APPROVAL STAMP
DOT / DES / OTA
03-318001
DISTRICT - EA
Reviewed by: YA WANG
Date: 10-27-08

CALIFORNIA STATE FIRE MARSHAL APPROVED
Approval of this plan does not authorize or approve any omission or deviation from applicable regulations. Final approval is subject to field inspection. One set of approved plans shall be available on the project site at all times.
Reviewed by: JEFFREY SCHWARTZ
Approval date: 1/11/10

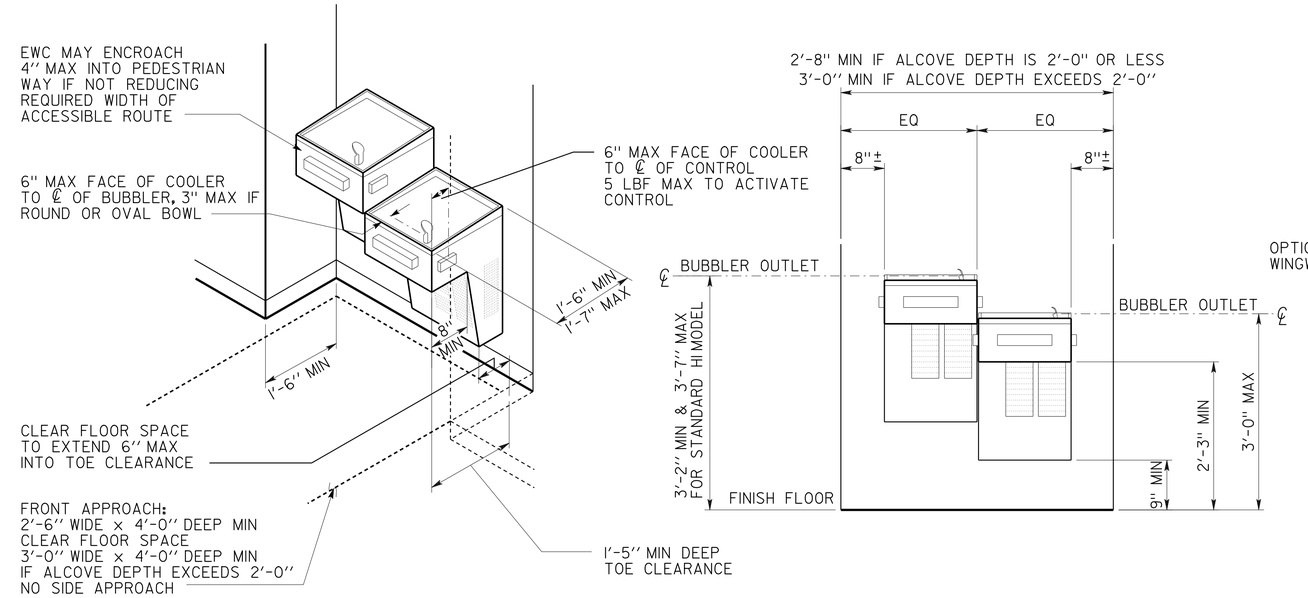

1 ALCOVE ELECTRIC WATER COOLER

FIXTURE TYPE MAY VARY

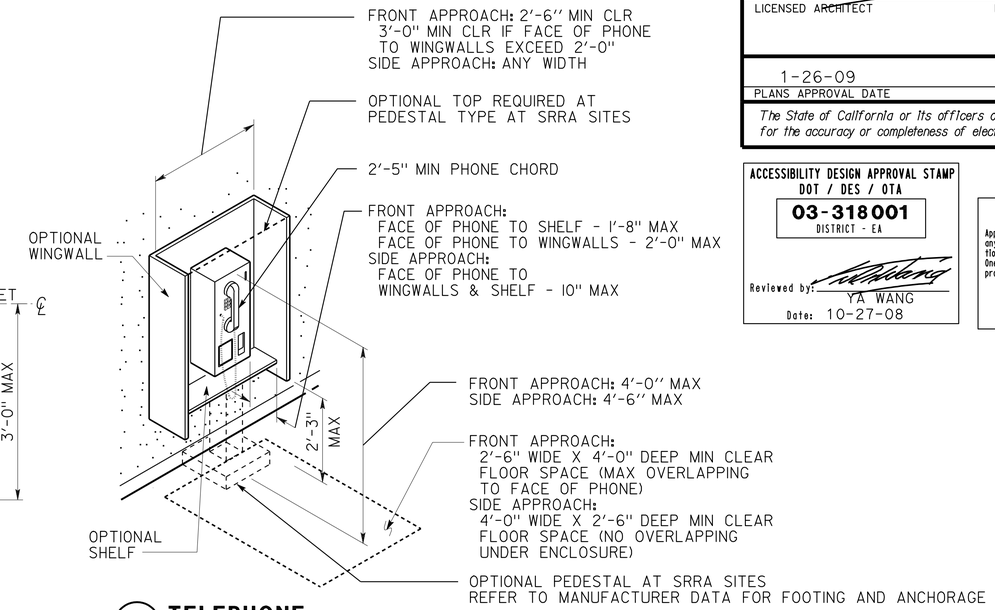

2 TELEPHONE

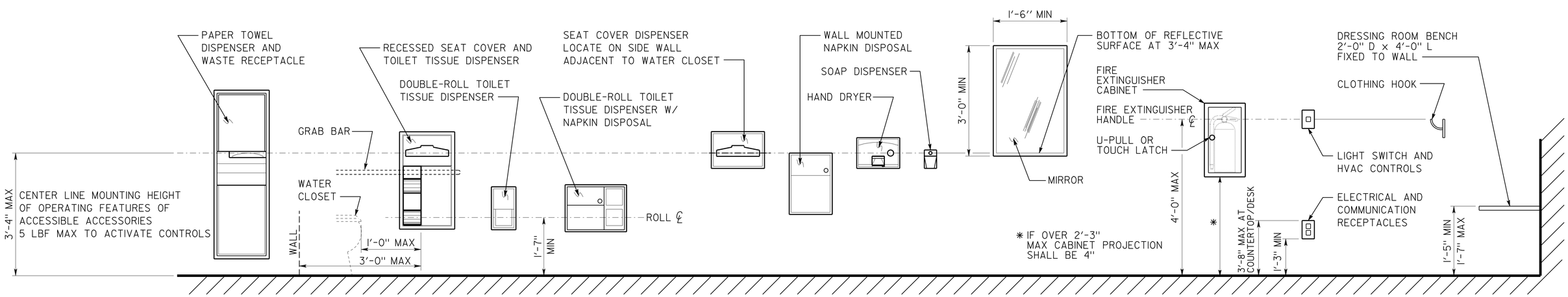

3 ACCESSORIES

NOTE *The Contractor shall verify all controlling dimensions before ordering or fabricating any material*

DETAILS

NO SCALE UNLESS OTHERWISE NOTED

NOTE: SPECIFIC DETAILS OR NOTES ON OTHER SHEETS SHALL PREVAIL OVER STANDARD DETAILS AND NOTES ON THIS SHEET

STANDARD DRAWING				
FILE NO. __-__-_	DESIGN	BY D. ALSEY	CHECKED Y.A. WANG	APPROVED R E Travis DESIGN SUPERVISOR
DRAWING DATE 08-08	DETAILS	BY D. GOOD	CHECKED Y.A. WANG	
	SUBMITTED BY Y.A. WANG			

STATE OF CALIFORNIA DEPARTMENT OF TRANSPORTATION

DIVISION OF ENGINEERING SERVICES ARCHITECTURAL AND STRUCTURAL DESIGN

BRIDGE NO. 17M5717
POST MILE 15.9

NEVADA CITY MAINTENANCE STATION RESIDENT MECHANIC'S FACILITY

ACCESSIBILITY STANDARD DETAILS

SHEET **A0-3.5**

a0_3_5.dgn
DS OSD Imperial Rev. 11/98 20-JAN-2010 13:57

ORIGINAL SCALE IN INCHES FOR REDUCED PLANS 0 1 2 3

CU 03225
EA 318001

DISREGARD PRINTS BEARING EARLIER REVISION DATES →

REVISION DATES (PRELIMINARY STAGE ONLY) SHEET OF

20-JAN-2010 13:57

a0_3_5.dgn

DIST.	COUNTY	ROUTE	POST MILES TOTAL PROJECT	SHEET NO.	TOTAL SHEETS
03	Nev	5717		41	106

LICENSED ARCHITECT — DATE 7/30/07

LICENSED ARCHITECT Warren Lai No. C-17122 Exp. 8/30/09 STATE OF CALIFORNIA

1-26-09
PLANS APPROVAL DATE

The State of California or its officers or agents shall not be responsible for the accuracy or completeness of electronic copies of this plan sheet.

CERTIFICATE OF COMPLIANCE (Part 1 of 2) ENV-1-C

PROJECT NAME Nevada City Maintenance Station		DATE Sept. 13, 2007
PROJECT ADDRESS P.O. Box 8, Nevada City Ca. 95959 - Highway 20/49		Building Permit #
PRINCIPAL DESIGNER-ENVELOPE Warren Lai	TELEPHONE 916-227-8239	
DOCUMENTATION AUTHOR W. THOMAS HUGHES	TELEPHONE 916-227-8382	Checked by/Date Enforcement Agency Use

GENERAL INFORMATION

DATE OF PLANS	BUILDING CONDITIONED FLOOR AREA	CLIMATE ZONE 1

BUILDING TYPE [X] NONRESIDENTIAL [ ] HIGH RISE RESIDENTIAL [ ] HOTEL/MOTEL GUEST ROOM [ ] RELOCATABLE - Indicate: [ ] Specific climate - list _____, or [ ] all climates

PHASE OF CONSTRUCTION [X] NEW CONSTRUCTION [ ] ADDITION [ ] ALTERATION [ ] UNCONDITIONED (File affidavit)

METHOD OF ENVELOPE COMPLIANCE [ ] COMPONENT [ ] OVERALL ENVELOPE [X] PERFORMANCE

SUPPORTING FORMS SUBMITTED [ ] ENV-2-C (Component) [ ] ENV-3-C (Overall Envelope) [ ] ENV-4-C (Skylight Worksheet)

STATEMENT OF COMPLIANCE

This Certificate of Compliance lists the building features and performance specifications needed to comply with Title 24, Parts 1 and 6 of the California Code of Regulations. This certificate applies only to building envelope requirements.

The documentation preparer hereby certifies that the documentation is accurate and complete.

DOCUMENTATION AUTHOR	SIGNATURE	DATE
W. THOMAS HUGHES	W Thomas Hughes	Sept. 13, 2007

The Principal Envelope Designer hereby certifies that the proposed building design represented in this set of construction documents is consistent with the other compliance forms and worksheets, with the specifications, and with any other calculations submitted with this permit application. The proposed building has been designed to meet the envelope requirements contained in Sections 110, 116 through 118, and 140, 142, 143 or 149 of Title 24, Part 6.

(This section of the Business and Professions Code is printed in full in the Nonresidential Manual.)

[X] I hereby affirm that I am eligible under the provisions of Division 3 of the Business and Professions Code to sign this document as the person responsible for its preparation; and that I am licensed in the State of California as a civil engineer or mechanical engineer, or I am a licensed architect.

PRINCIPAL ENVELOPE DESIGNER-NAME	SIGNATURE	DATE	LIC.#
Warren Lai	Warren Lai	8/29/08	C17122

ENVELOPE MANDATORY MEASURES

[ ] Indicate location on plans of Note Block for Mandatory Measures _____

INSTRUCTIONS TO APPLICANT ENVELOPE COMPLIANCE & WORKSHEETS (Check box if worksheet is included)

For detailed instructions on the use of this and all Energy Efficiency Standards compliance forms, please refer to the Nonresidential Manual published by the California Energy Commission.

[X]	ENV-1-C	Certificate of Compliance. Required on plans for all submittals. Part 2 may be incorporated in schedules on plans.
[ ]	ENV-2-C	Use with the Envelope Component compliance method.
[ ]	ENV-3-C	Use with the Overall Envelope compliance method.
[ ]	ENV-4-C	Optional. Use for the minimum skylight requirements for large enclosed spaces.

2005 Nonresidential Compliance Forms ***April 2005***

CERTIFICATE OF COMPLIANCE (Part 1 of 3) MECH-1-C

PROJECT NAME Nevada City Maintenance Station		DATE Sept. 13, 2007
PROJECT ADDRESS P.O. Box 8, Nevada City Ca. 95959 - Highway 20/49		N/A Building Permit #
PRINCIPAL DESIGNER-MECHANICAL W. THOMAS HUGHES	TELEPHONE 916-227-8382	N/A
DOCUMENTATION AUTHOR W. THOMAS HUGHES	TELEPHONE 916-227-8382	Checked by/Date Enforcement Agency Use

GENERAL INFORMATION

DATE OF PLANS	BUILDING CONDITIONED FLOOR AREA 2092 SQ FT	CLIMATE ZONE 1

BUILDING TYPE [X] NONRESIDENTIAL [ ] HIGH RISE RESIDENTIAL [ ] HOTEL/MOTEL GUEST ROOM

PHASE OF CONSTRUCTION [X] NEW CONSTRUCTION [ ] ADDITION [ ] ALTERATION [ ] UNCONDITIONED (File affidavit)

PROOF OF ENVELOPE COMPLIANCE [ ] PREVIOUS ENVELOPE PERMIT [X] ENVELOPE COMPLIANCE ATTACHED

STATEMENT OF COMPLIANCE

This Certificate of Compliance lists the building features and performance specifications needed to comply with Title 24, Parts 1 and 6 of the California Code of Regulations. This certificate applies only to building mechanical requirements.

The documentation preparer hereby certifies that the documentation is accurate and complete.

DOCUMENTATION AUTHOR	SIGNATURE	DATE
W. THOMAS HUGHES	W Thomas Hughes	Sept. 13, 2007

The Principal Mechanical Designer hereby certifies that the proposed building design represented in this set of construction documents is consistent with the other compliance forms and worksheets, with the specifications, and with any other calculations submitted with this permit application. The proposed building has been designed to meet the mechanical requirements contained in the applicable parts of Sections 100, 101, 102, 110 through 115, 120 through 125, 142, 144 and 145.

✓
[X] The plans & specifications meet the requirements of Part 1 (Sections 10-103a).

[X] The installation certificates meet the requirements of Part 1 (10-103a 3).

[X] The operation & maintenance information meets the requirements of Part 1 (10-103c).

(This section of the Business and Professions Code is printed in full in the Nonresidential Manual.)

[X] I hereby affirm that I am eligible under the provisions of Division 3 of the Business and Professions Code to sign this document as the person responsible for its preparation; and that I am licensed in the State of California as a civil engineer or mechanical engineer, or I am a licensed architect.

[ ] I affirm that I am eligible under the exemption to Division 3 of the Business and Professions Code by Section 5537.2 or 6737.3 to sign this document as the person responsible for its preparation; and that I am a licensed contractor performing this work.

[ ] I affirm that I am eligible under the exemption to Division 3 of the Business and Professions Code to sign this document because it pertains to a structure or type of work described pursuant to Business and Professions Code sections 5537, 5538, and 6737.1.

PRINCIPAL MECHANICAL DESIGNER-NAME		DATE	LIC.#
W. THOMAS HUGHES	W Thomas Hughes	Sept. 13, 2007	M-33859

INSTRUCTIONS TO APPLICANT MECHANICAL COMPLIANCE & WORKSHEETS (Check box if worksheet is included)

[X]	MECH-1-C	Certificate of Compliance. Part 1 of 3, 2 of 3, 3 of 3 are required on plans for all submittals.
[X]	MECH-2-C	Air/Water/Service/Water Pools Requirements. Part 1 of 3, 2 of 3, 3 of 3 are required for all submittals, but may be on plans.
[X]	MECH-3-C	Mechanical Ventilation and Reheat is required for all submittals with mechanical ventilation, but may be on plans.
[ ]	MECH-4-C	HVAC Misc. Prescriptive Requirements is required for all prescriptive submittals, but may be on plans.

2005 Nonresidential Compliance Forms ***December 2005***

ACCESSIBILITY DESIGN APPROVAL STAMP
DOT / DES / OTA
03-318001
DISTRICT - EA
Reviewed by: YA WANG
Date: 10-27-08

CALIFORNIA STATE FIRE MARSHAL APPROVED
Approval of this plan does not authorize or approve any omission or deviation from applicable regulations. Final approval is subject to field inspection. One set of approved plans shall be available on the project site at all times.
Reviewed by: JEFFREY SCHWARTZ
Approval date: 1/11/10

NOTE *The Contractor shall verify all controlling dimensions before ordering or fabricating any material*

	BY		CHECKED
DESIGN	BY	Gary Harris	CHECKED
DETAILS	BY	Gary Harris	CHECKED
QUANTITIES	BY		CHECKED

STATE OF CALIFORNIA
DEPARTMENT OF TRANSPORTATION

DIVISION OF ENGINEERING SERVICES
ARCHITECTURAL AND STRUCTURAL DESIGN

BRIDGE NO. 17M5717
POST MILE 15.9

NEVADA CITY MAINTENANCE STATION RESIDENT MECHANIC'S FACILITY
TITLE 24 ENERGY COMPLIANCE FORMS

SHEET **A0-4.1**

a0_4_1.dgn
DS OSD Imperial Rev. 11/98 20-JAN-2010 13:57

ORIGINAL SCALE IN INCHES FOR REDUCED PLANS 0 1 2 3

CU 03225
EA 318001

DISREGARD PRINTS BEARING EARLIER REVISION DATES → REVISION DATES (PRELIMINARY STAGE ONLY) XX-XX-XX

SHEET X OF X

20-JAN-2010 13:57
a0_4_1.dgn

DIST.	COUNTY	ROUTE	POST MILES TOTAL PROJECT	SHEET NO.	TOTAL SHEETS
03	Nev	5717		42	106

LICENSED ARCHITECT — DATE 7/30/07

LICENSED ARCHITECT Warren Lai No. C-17122 Exp. 8/30/09 STATE OF CALIFORNIA

1-26-09
PLANS APPROVAL DATE

The State of California or its officers or agents shall not be responsible for the accuracy or completeness of electronic copies of this plan sheet.

CERTIFICATE OF COMPLIANCE (Part 1 of 4) LTG-1-C

PROJECT NAME: Nevada City Maintenance Station			DATE: Sept. 13, 2007
PROJECT ADDRESS: P.O. Box 8, Nevada City Ca. 95959 - Highway 20/49			N/A
PRINCIPAL DESIGNER-LIGHTING: Christine H. Mamaril		TELEPHONE: (916) 227-8153	Building Permit # N/A
DOCUMENTATION AUTHOR: Joseph H Abdelsayed		TELEPHONE: (916) 227-8062	Checked by/Date Enforcement Agency Use

GENERAL INFORMATION

DATE OF PLANS	Sept. 2008	BUILDING CONDITIONED FLOOR AREA	3731 sq.ft.	CLIMATE ZONE	1

BUILDING TYPE	[X] NONRESIDENTIAL	[ ] HIGH RISE RESIDENTIAL	[ ] HOTEL/MOTEL GUEST
[X] CONDITIONED SPACES	[ ] UNCONDITIONED SPACES	[ ] INDOOR / OUTDOOR SIGNS	
PHASE OF CONSTRUCTION	[X] NEW	[ ] ADDITION	[ ] ALTERATION

METHOD OF COMPLIANCE

[ ] PERFORMANCE [ ] COMPLETE BUILDING [X] AREA CATEGORY [ ] TAILORED [ ] COMMON LIGHTING

STATEMENT OF COMPLIANCE

This Certificate of Compliance lists the building features and performance specifications needed to comply with Title 24, Parts 1 and 6 of the California Code of Regulations. This certificate applies only to building lighting requirements.

The documentation preparer hereby certifies that the documentation is accurate and complete.

DOCUMENTATION AUTHOR	SIGNATURE	DATE
Joseph H. Abdelsayed	Jo Abdelsayed	11/02/2007

The Principal Lighting Designer hereby certifies that the proposed building design represented in this set of construction documents is consistent with the other compliance forms and worksheets, with the specifications, and with any other calculations submitted with this permit application. The proposed building has been designed to meet lighting requirements contained in the applicable parts of Sections 110, 119, 130-132, 146, 148, & 149 of Title 24, Part 6.

[X] The plans & specifications meet the requirements of Part 6 (Sections 10-103a). [ ] The installation certificates meet the requirements of Part 6 (10-103a 3).

[X] The operation & maintenance information meets the requirements of Part 6 (10-103c).
Please check one: (These sections of the Business and Professions Code are printed in full in the Nonresidential Manual.)

[X] I hereby affirm that I am eligible under the provisions of Division 3 of the Business and Professions Code to sign this document as the person responsible for its preparation; and that I am licensed in the State of California as a civil engineer or electrical engineer, or I am a licensed architect.

[ ] I affirm that I am eligible under the provisions of Division 3 of the Business and Professions Code by section 5537.2 or 6737.3 to sign this document as the person responsible for its preparation; and that I am a licensed contractor performing this work.

[ ] I affirm that I am eligible under Division 3 of the Business and Professions Code to sign this document because it pertains to a structure or type of work described as exempt pursuant to Business Code Sections 5537, 5538 and 6737.1.

PRINCIPAL LIGHTING DESIGNER-NAME	SIGNATURE	DATE	LIC.#
Christine H. Mamaril	Christine H. Mamaril	11/02/2007	12801

LIGHTING MANDATORY MEASURES

✓ [ ] Indicate location on plans of Note Block for Mandatory Measures _____

LIGHTING COMPLIANCE FORMS & WORKSHEETS (Check box if worksheet is included)

[X]	LTG-1-C, Parts 1 of 4 and 2 of 4	Certificate of Compliance. Part 1 of 4 and 2 of 4 are required for all submittals.
[ ]	LTG-1-C, Part 3 of 4	Certificate of Compliance. Part 3 of 4 is required only if Control Credits are claimed.
[ ]	LTG-1-C, Part 4 of 4	Certificate of Compliance. Part 4 of 4 submittal is required when lighting controls are installed.
[ ]	LTG-2-C	Indoor Lighting Schedule
[ ]	LTG-3-C	Portable Lighting Worksheet
[ ]	LTG-4-C	Lighting Controls Credit Worksheet
[ ]	LTG-5-C	Indoor Lighting Power Allowance
[ ]	LTG-6-C	Tailored Method Worksheet
[ ]	LTG-7-C	Room Cavity Ratio Worksheet
[ ]	LTG-8-C	Common Lighting Systems Method Worksheet
[ ]	LTG-9-C	Line Voltage Track Lighting Worksheet
[ ]	OLTG-4-C	Signs (See OLTG-4-C Sign Worksheet in Chapter 6, Outdoor Lighting and Signs Chapter)

CERTIFICATE OF COMPLIANCE (Part 2 of 4) LTG-1-C

PROJECT NAME: Nevada City Maintenance Station DATE: Sept. 13, 2007

INSTALLED INDOOR LIGHTING POWER FOR CONDITIONED AND UNCONDITIONED SPACES

		INSTALLED WATTS
INSTALLED LIGHTING, CONDITIONED SPACES (From LTG-2-C)		xxx
PORTABLE LIGHTING (From LTG-3-C)	+	0
LIGHTING CONTROL CREDIT, CONDITIONED SPACES (From LTG-4-C)	-	xxx
CONDITIONED SPACE ADJUSTED INSTALLED LIGHTING POWER	=	xxx
INSTALLED LIGHTING, UNCONDITIONED SPACES (From LTG-2-C)		0
LIGHTING CONTROL CREDIT, UNCONDITIONED SPACES (From LTG-4-C)	-	0
UNCONDITIONED SPACE ADJUSTED INSTALLED LIGHTING POWER	=	0

ALLOWED INDOOR LIGHTING POWER FOR CONDITIONED SPACES

✓
[ ] COMPLETE BUILDING METHOD (From LTG-5-C)

[X] AREA CATEGORY METHOD (From LTG-5-C)

[ ] TAILORED METHOD (From LTG-5-C)

	ALLOWED WATTS
ALLOWED LIGHTING POWER	xxx

ALTERNATE COMPLIANCE

✓
[ ] PERFORMANCE METHOD

[ ] COMMON LIGHTING SYSTEM (From LTG-8-C)

ALLOWED INDOOR LIGHTING POWER FOR UNCONDITIONED SPACES (From LTG-5-C) _____ Watts

MANDATORY LIGHTING MEASURES FOR INDOOR LIGHTING AND DAYLIT AREAS

MANDATORY INDOOR AND DAYLIGHTING AUTOMATIC CONTROLS

CONTROL LOCATION (Room #, Area #, or Description)	CONTROL IDENTIFICATION	CONTROL TYPE (Auto Time Switch, Dimming, Photosensor, etc.)	SPACE CONTROLLED Lists the location of controlled lights	✓ If Control is for Daylighting	NOTE TO FIELD

ACCESSIBILITY DESIGN APPROVAL STAMP
DOT / DES / OTA
03-318001
DISTRICT - EA
Reviewed by: YA WANG
Date: 10-27-08

CALIFORNIA STATE FIRE MARSHAL APPROVED
Approval of this plan does not authorize or approve any omission or deviation from applicable regulations. Final approval is subject to field inspection. One set of approved plans shall be available on the project site at all times.
Reviewed by: JEFFREY SCHWARTZ
Approval date: 1/11/10

NOTE *The Contractor shall verify all controlling dimensions before ordering or fabricating any material*

	BY	CHECKED
DESIGN	Gary Harris	
DETAILS	Gary Harris	
QUANTITIES		

STATE OF CALIFORNIA DEPARTMENT OF TRANSPORTATION

DIVISION OF ENGINEERING SERVICES ARCHITECTURAL AND STRUCTURAL DESIGN

BRIDGE NO. 17M5717
POST MILE 15.9

NEVADA CITY MAINTENANCE STATION RESIDENT MECHANIC'S FACILITY
TITLE 24 ENERGY COMPLIANCE FORMS

SHEET **A0-4.2**

a0_4_2.dgn
DS OSD Imperial Rev. 11/98 20-JAN-2010 13:58

ORIGINAL SCALE IN INCHES FOR REDUCED PLANS 0 1 2 3

CU 03225
EA 318001

DISREGARD PRINTS BEARING EARLIER REVISION DATES → REVISION DATES (PRELIMINARY STAGE ONLY) XX-XX-XX SHEET X OF X

20-JAN-2010 13:58
a0_4_2.dgn

CERTIFICATE OF COMPLIANCE (Part 1 of 2) OLTG-1-C

PROJECT NAME: Nevada City Maintenance Station Resident Mechanic Facility		DATE: 11/02/2007
PROJECT ADDRESS: 10057 Gold Flat Road, Nevada City, CA 95959		Building Permit #
PRINCIPAL DESIGNER-LIGHTING: Christine H. Mamaril	TELEPHONE: (916) 227-8153	
DOCUMENTATION AUTHOR: Joseph H Abdelsayed	TELEPHONE: (916) 227-8062	Checked by/Date Enforcement Agency Use

GENERAL INFORMATION

DATE OF PLANS Sept. 2008 | OUTDOOR LIGHTING ZONE (✓ One) ☐ LZ1 ☒ LZ2 ☐ LZ3 ☐ LZ4

FUNCTION TYPE ☒ OUTDOOR LIGHTING ☐ OUTDOOR SIGNS ☐ INDOOR SIGNS

PHASE OF CONSTRUCTION ☒ NEW CONSTRUCTION ☐ ADDITION ☐ ALTERATION

STATEMENT OF COMPLIANCE

This Certificate of Compliance lists outdoor lighting system specifications needed to comply with Title 24, Parts 1 and 6 of the California Code of Regulations. This certificate applies only to building lighting requirements.

The documentation preparer hereby certifies that the documentation is accurate and complete.

DOCUMENTATION AUTHOR	SIGNATURE	DATE
Joseph H. Abdelsayed	Jo Abdelsayed	11/02/2007

The Principal Lighting Designer hereby certifies that the proposed outdoor lighting and signs design represented in this set of construction documents is consistent with the other compliance forms and worksheets, with the specifications, and with any other calculations submitted with this permit application. The proposed building has been designed to meet the lighting requirements contained in the applicable parts of Sections 110, 119, 130 through 132, 146, & 149 of Title 24, Part 6.

(This section of the Business and Professions Code is printed in full in the Nonresidential Manual.)

☒ I hereby affirm that I am eligible under the provisions of Division 3 of the Business and Professions Code to sign this document as the person responsible for its preparation; and that I am licensed in the State of California as a civil engineer or electrical engineer, or I am a licensed architect.

PRINCIPAL LIGHTING DESIGNER-NAME	SIGNATURE	DATE	LIC.#
Christine H. Mamaril	Christine H. Mamaril	11/02/2007	12801

INSTRUCTIONS TO APPLICANT OUTDOOR LIGHTING COMPLIANCE & WORKSHEETS (Check box if worksheet is included)

For detailed instructions on the use of this and all Energy Efficiency Standards compliance forms, please refer to the Nonresidential Manual published by the California Energy Commission.

☒ OLTG-1-C	Certificate of Compliance. Required on plans for all submittals for outdoor lighting. Part 2 of 2 may be incorporated in schedules on the plans.
	Either LTG-1-C or OLTG-1-C may be used for signs as follows: 1. Use LTG-1-C if the project consists solely of indoor signs. 2. Use LTG-1-C if the project consists of indoor lighting, and outdoor or indoor signs, but no other outdoor lighting. 3. Use OLTG-1-C if the project consists solely of outdoor signs. 4. Use OLTG-1-C if the project consists of outdoor lighting, and indoor or outdoor signs, but no other indoor lighting.
☐ OLTG-2-C	Lighting Compliance Summary. Applicable parts required for ALL outdoor lighting allowances (Except for signs)
☐ OLTG-3-C	Area Calculations Worksheets. Applicable parts required for all outdoor area calculations
☐ OLTG-4-C	Sign Lighting Compliance. Required for all internally and externally illuminated signs, for both indoor and outdoor signs.

2005 Nonresidential Compliance Forms ***April 2005***

CERTIFICATE OF COMPLIANCE (Part 2 of 2) OLTG-1-C

PROJECT NAME: Nevada City Maintenance Station Resident Mechanic Facility

Lighting Schedules on Plans Show that Outdoor Lighting Meets Allowed Lighting Power

✓

☒ Lighting power allowances for general site illumination on OLTG-2-C Part 1 of 4
☐ Not applicable

☐ Lighting power allowances for local ordinances or for security multipliers on OLTG-2-C Part 2 of 4
☒ Not applicable

☐ Lighting power allowances for specific applications, other than vehicle service stations with canopies on OLTG-2-C Part 3 of 4
☐ Not applicable

☐ Lighting power allowances for vehicle service station canopies on OLTG-2-C Part 4 of 4
☒ Not applicable

☐ Sign lighting compliance on OLTG-4-C
☒ Not applicable

Mandatory Measures on Plans Show that Lighting Outdoor Lighting Controls and Equipment
Indicate location on plans of Note Block for Mandatory Measure

✓

☒ Installed lighting power has been determined in accordance with § 130(c)1
☐ Not applicable

☒ All permanently installed luminaires with lamps rated over 100 watts either have a lamp effcacy of at least 60 lumens per watt or are controlled by a motion sensor S 132(a)
☐ Not applicable

☒ All Luminaires with lamps rated greater than 175 watts in hardscape areas, including parking lots, building entrances, canopies, and all outdoor scales areas meet the Cutoof Requirements of S 132(b)
☐ Not applicable

☒ All permanently installed outdoor lighting meets the Control Requirements of § 132(c)1
☐ Not applicable

☐ Building facades, parking lots, garages, canopies, and outdoor sales areas meet the Multi-Level Lighting Requirements of S 132(g)2
☒ Not applicable

MANDATORY AUTOMATIC CONTROLS

CONTROL LOCATION	CONTROL IDENTIFICATION	CONTROL TYPE (Auto Time Switch, Dimming, Photosensor, etc.)	AREA CONTROLLED	NOTE TO FIELD

2005 Nonresidential Compliance Forms ***September 2005***

DIST.	COUNTY	ROUTE	POST MILES TOTAL PROJECT	SHEET NO.	TOTAL SHEETS
03	Nev	5717		43	106

Warren Lai 7/30/07
LICENSED ARCHITECT DATE

LICENSED ARCHITECT Warren Lai No. C-17122 Exp. 8/30/09 STATE OF CALIFORNIA

1-26-09
PLANS APPROVAL DATE

The State of California or its officers or agents shall not be responsible for the accuracy or completeness of electronic copies of this plan sheet.

ACCESSIBILITY DESIGN APPROVAL STAMP DOT / DES / OTA
03-318001
DISTRICT - EA
Reviewed by: YA WANG
Date: 10-27-08

CALIFORNIA STATE FIRE MARSHAL APPROVED
Approval of this plan does not authorize or approve any omission or deviation from applicable regulations. Final approval is subject to field inspection. One set of approved plans shall be available on the project site at all times.
Reviewed by: JEFFREY SCHWARTZ
Approval date: 1/11/10

NOTE *The Contractor shall verify all controlling dimensions before ordering or fabricating any material*

	BY	CHECKED
DESIGN	Gary Harris	
DETAILS	Gary Harris	
QUANTITIES		

STATE OF CALIFORNIA DEPARTMENT OF TRANSPORTATION

DIVISION OF ENGINEERING SERVICES ARCHITECTURAL AND STRUCTURAL DESIGN

BRIDGE NO. 17M5717
POST MILE 15.9

NEVADA CITY MAINTENANCE STATION RESIDENT MECHANIC'S FACILITY
TITLE 24 ENERGY COMPLIANCE FORMS

SHEET **A0-4.3**

a0_4_3.dgn
DS OSD Imperial Rev. 11/98 20-JAN-2010 13:58

ORIGINAL SCALE IN INCHES FOR REDUCED PLANS 0 1 2 3

CU 03225
EA 318001

DISREGARD PRINTS BEARING EARLIER REVISION DATES → REVISION DATES (PRELIMINARY STAGE ONLY) XX-XX-XX

SHEET X OF X

20-JAN-2010 13:58
a0_4_3.dgn

DIST.	COUNTY	ROUTE	POST MILES TOTAL PROJECT	SHEET NO.	TOTAL SHEETS
03	Nev	5717		44	106

LICENSED ARCHITECT — DATE 7/30/07

LICENSED ARCHITECT Warren Lai No. C-17122 Exp. 8/30/09 STATE OF CALIFORNIA

1-26-09
PLANS APPROVAL DATE

The State of California or its officers or agents shall not be responsible for the accuracy or completeness of electronic copies of this plan sheet.

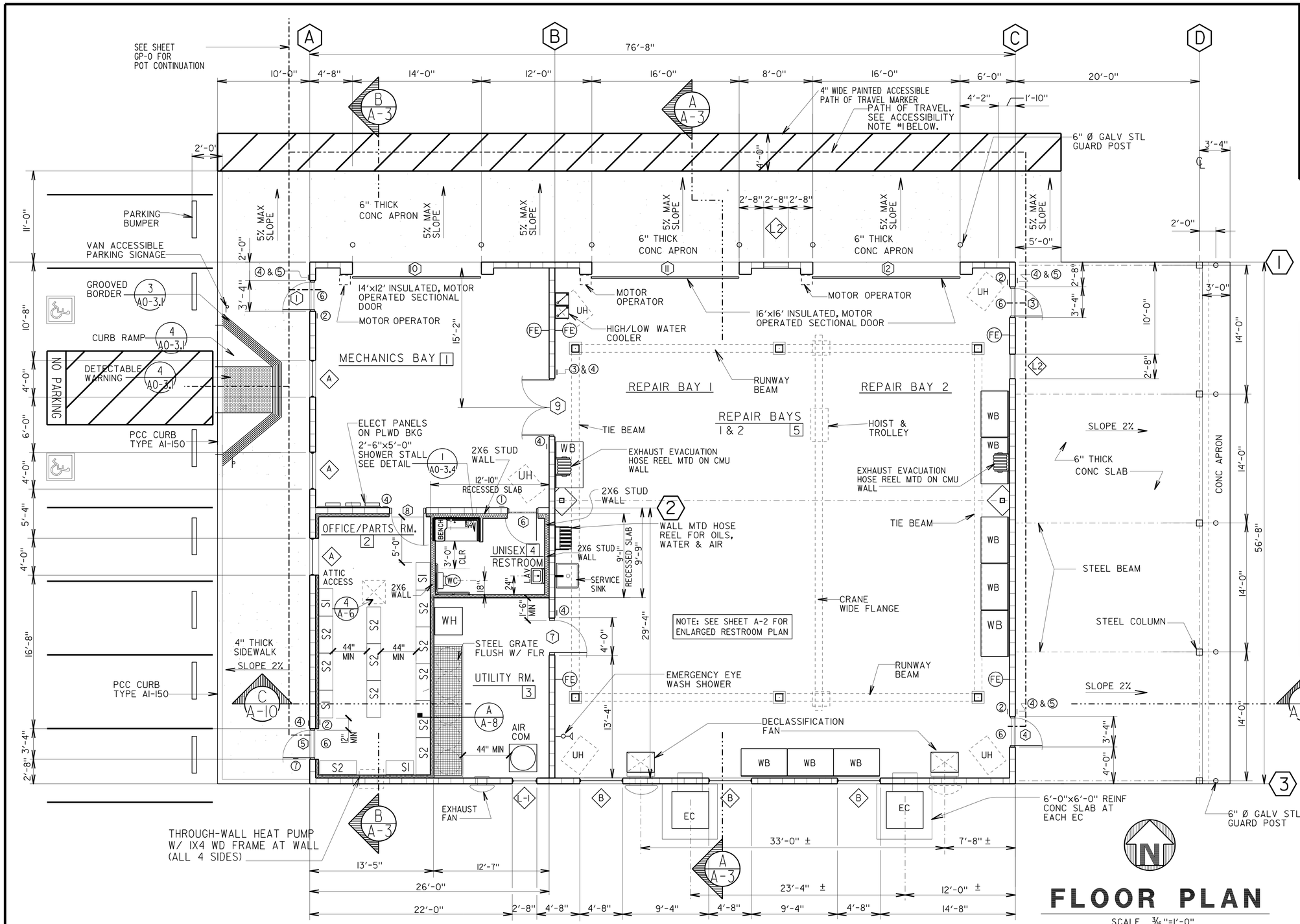

FLOOR PLAN

SCALE 3/16"=1'-0"

ACCESSIBILITY DESIGN APPROVAL STAMP
DOT / DES / OTA
03-318001
DISTRICT - EA
Reviewed by: YA WANG
Date: 10-27-08

CALIFORNIA STATE FIRE MARSHAL APPROVED
Approval of this plan does not authorize or approve any omission or deviation from applicable regulations. Final approval is subject to field inspection. One set of approved plans shall be available on the project site at all times.
Reviewed by: JEFFREY SCHWARTZ
Approval date: 1/11/10

METAL SHELVING SCHEDULE

Number	DESCRIPTION	QUANITY
S1	3'-0"X1'-6"X7'-3" FLOOR MOUNTED METAL SHELVING UNITS WITH 5 SHELVES	11
S2	4'-0"X1'-6"X7'-3" FLOOR MOUNTED METAL SHELVING UNITS WITH 5 SHELVES	4

NOTE: ALL METAL SHELVING UNITS SHALL BE SECURED TO THE SUPPORTING WALLS OR SECURED BY CEILING STRAPS PER MANUFACTURERS REQUIREMENTS

BUILDING AND DOOR SIGNAGE

Numbers are applicable where noted on plans

Number on Plan	Signage Text or Content	Detail Sheet
1	Restroom Signs & IDN symbols	A0-3.3 DETAIL 1,3,4 & 5
2	"Exit"	A0-3.3 DETAIL 2
3	"Exit Route"	A0-3.3 DETAIL 1, 2 & 5
4	Room IDN	A0-3.3 DETAIL 1, 2 & 5
5	ACCESSIBLE BLDG ENTRANCE SIGN	A0-3.3 DETAIL 5 & 6
6	SELF ELUMINATING EXIT SIGN	A0-2.2 DETAIL 1

WALL SCHEDULE

- 8" WIDE CMU WALL
- CMU WALL W/ INSULATED FURRED WOOD STUD WALL & GYP BD FINISH
- INSULATED WOOD STUD WALL W/ GYP BD FINISH

ACCESSIBILITY NOTES

1. PATH OF TRAVEL SHALL BE MIN 48" WIDE. MAX 5% SLOPE IN DIRECTION OF TRAVEL, MAX 2% CROSS SLOPE. MAX 1/2" LEVEL CHANGE W/ MAX 1:2 SLOPE. LEVEL CHANGE NOT EXCEEDING 1/4" MAY BE VERTICAL. SURFACE SHALL BE FIRM, STABLE, SLIP-RESISTANT, W/O LOOSE GRAVEL, SAND, CHIPS, ETC.
2. AISLES FORMED BY EQUIPMENT/STORED MATERIALS/WALLS SHALL BE MIN 36" WIDE IF SERVING WINE, AND MIN 44" IF SERVING BOTH SIDES

NOTE *The Contractor shall verify all controlling dimensions before ordering or fabricating any material*

	BY	CHECKED
DESIGN	Gary Harris	
DETAILS	Gary Harris	
QUANTITIES		

STATE OF CALIFORNIA DEPARTMENT OF TRANSPORTATION

DIVISION OF ENGINEERING SERVICES ARCHITECTURAL AND STRUCTURAL DESIGN

BRIDGE NO. 17M5717
POST MILE 15.9

NEVADA CITY MAINTENANCE STATION RESIDENT MECHANIC'S FACILITY

FLOOR PLAN

SHEET A-1

a_01.dgn
DS OSD Imperial Rev. 11/98 20-JAN-2010 13:58

ORIGINAL SCALE IN INCHES FOR REDUCED PLANS 0 1 2 3

CU 03225
EA 318001

DISREGARD PRINTS BEARING EARLIER REVISION DATES

REVISION DATES (PRELIMINARY STAGE ONLY) SHEET OF
11 20

20-JAN-2010 13:58
a_01.dgn

DIST.	COUNTY	ROUTE	POST MILES TOTAL PROJECT	SHEET NO.	TOTAL SHEETS
03	Nev	5717		45	106

LICENSED ARCHITECT — DATE 7/30/07

LICENSED ARCHITECT Warren Lai No. C-17122 Exp. 8/30/09 STATE OF CALIFORNIA

1-26-09
PLANS APPROVAL DATE

The State of California or its officers or agents shall not be responsible for the accuracy or completeness of electronic copies of this plan sheet.

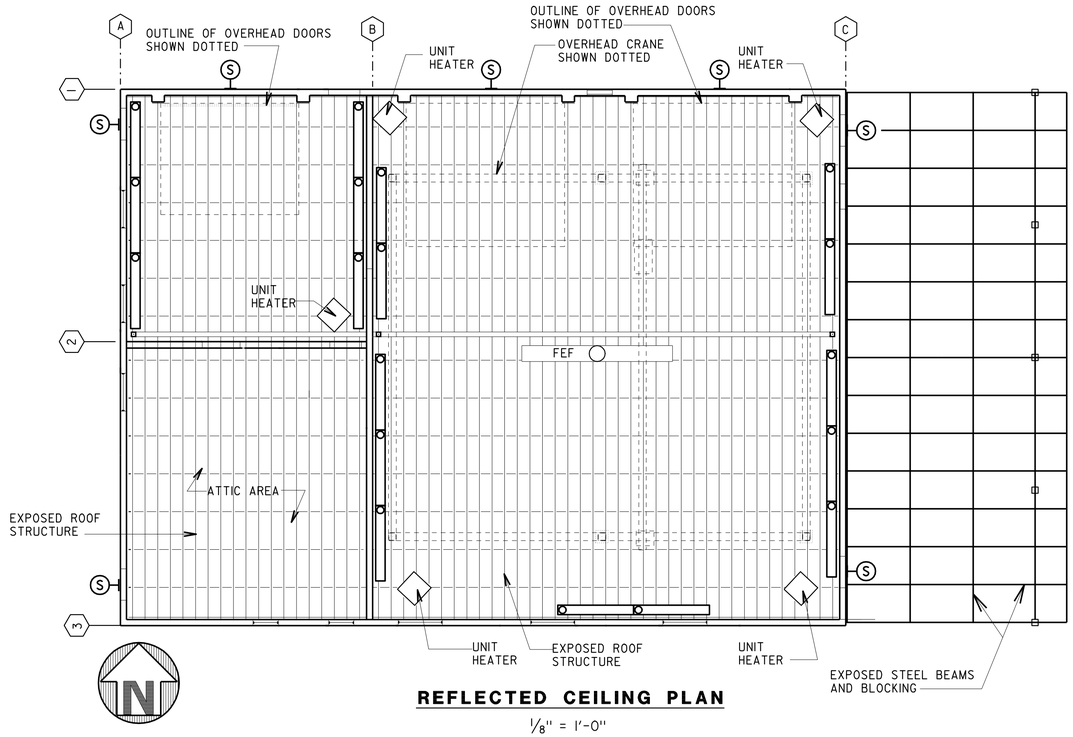

REFLECTED CEILING PLAN

1/8" = 1'-0"

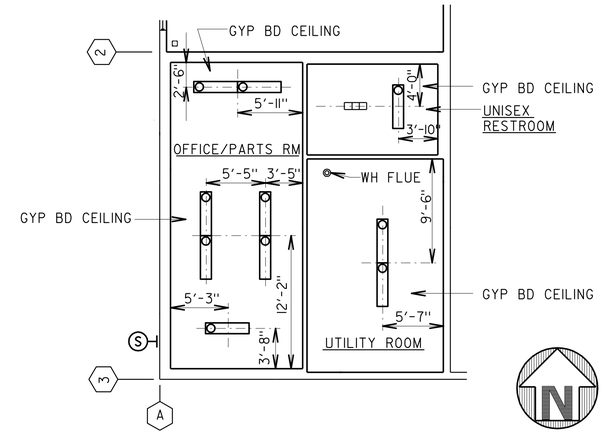

REFLECTED CEILING PLAN
PARTS AND UTILITY ROOM
NTS

KEY

- FLUORESCENT LIGHT FIXTURE SEE ELECTRICAL SHEETS
- FEF — FUME EXHAUST FAN
- COMBINATION EXHAUST FAN, HEAT LAMP AND LIGHT UNIT
- (S) — SURFACE MOUNTED LIGHT FIXTURE

ACCESSIBILITY DESIGN APPROVAL STAMP
DOT / DES / OTA
03-318001
DISTRICT - EA
Reviewed by: YA WANG
Date: 10-27-08

CALIFORNIA STATE FIRE MARSHAL
APPROVED
Approval of this plan does not authorize or approve any omission or deviation from applicable regulations. Final approval is subject to field inspection. One set of approved plans shall be available on the project site at all times.
Reviewed by: JEFFREY SCHWARTZ
Approval date: 1/11/10

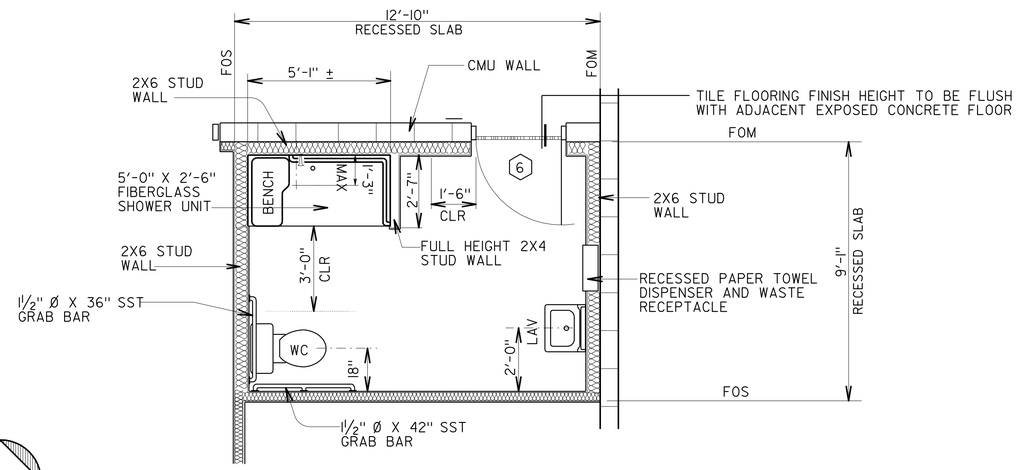

UNISEX RESTROOM - FLOOR PLAN

3/8" = 1'-0"

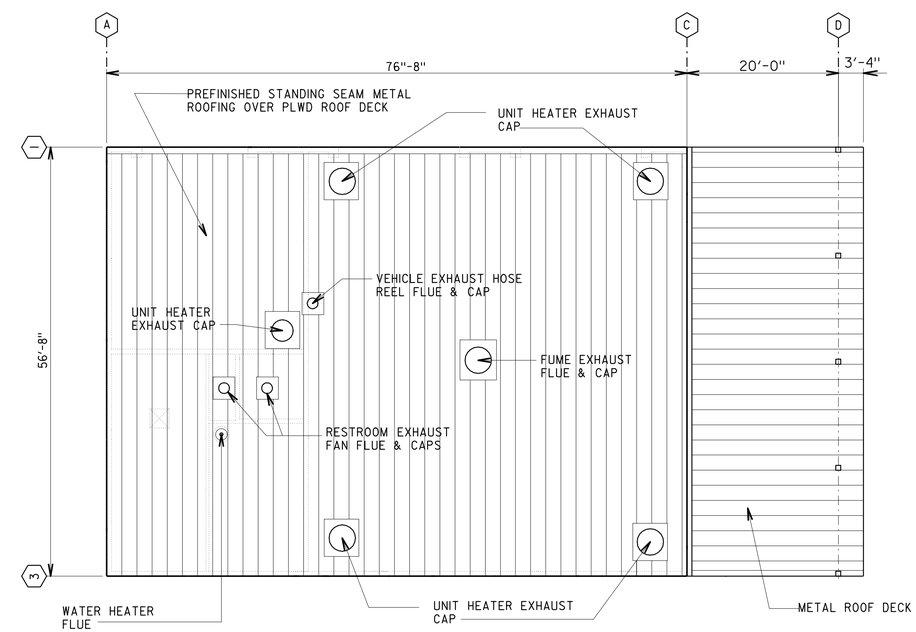

ROOF PLAN

NTS

NOTE *The Contractor shall verify all controlling dimensions before ordering or fabricating any material*

DESIGN	BY Gary Harris	CHECKED	
DETAILS	BY Gary Harris	CHECKED	
QUANTITIES	BY	CHECKED	

STATE OF CALIFORNIA
DEPARTMENT OF TRANSPORTATION

DIVISION OF ENGINEERING SERVICES
ARCHITECTURAL AND STRUCTURAL DESIGN

BRIDGE NO. 17M5717
POST MILE 15.9

NEVADA CITY MAINTENANCE STATION
RESIDENT MECHANIC'S FACILITY
REFLECTED CEILING AND ROOF PLANS

SHEET **A-2**

a_02.dgn
DS OSD Imperial Rev. 11/98 20-JAN-2010 13:59

ORIGINAL SCALE IN INCHES FOR REDUCED PLANS 0 1 2 3

CU 03225
EA 318001

DISREGARD PRINTS BEARING EARLIER REVISION DATES →
REVISION DATES (PRELIMINARY STAGE ONLY)

SHEET 12 OF 20

20-JAN-2010 13:59
a_02.dgn

DIST.	COUNTY	ROUTE	POST MILES TOTAL PROJECT	SHEET NO.	TOTAL SHEETS
03	Nev	5717		46	106

LICENSED ARCHITECT — DATE 7/30/07

LICENSED ARCHITECT Warren Lai No. C-17122 Exp. 8/30/09 STATE OF CALIFORNIA

1-26-09
PLANS APPROVAL DATE

The State of California or its officers or agents shall not be responsible for the accuracy or completeness of electronic copies of this plan sheet.

ACCESSIBILITY DESIGN APPROVAL STAMP
DOT / DES / OTA
03-318001
DISTRICT - EA
Reviewed by: YA WANG
Date: 10-27-08

CALIFORNIA STATE FIRE MARSHAL APPROVED
Approval of this plan does not authorize or approve any omission or deviation from applicable regulations. Final approval is subject to field inspection. One set of approved plans shall be available on the project site at all times.
Reviewed by: JEFFREY SCHWARTZ
Approval date: 1/11/10

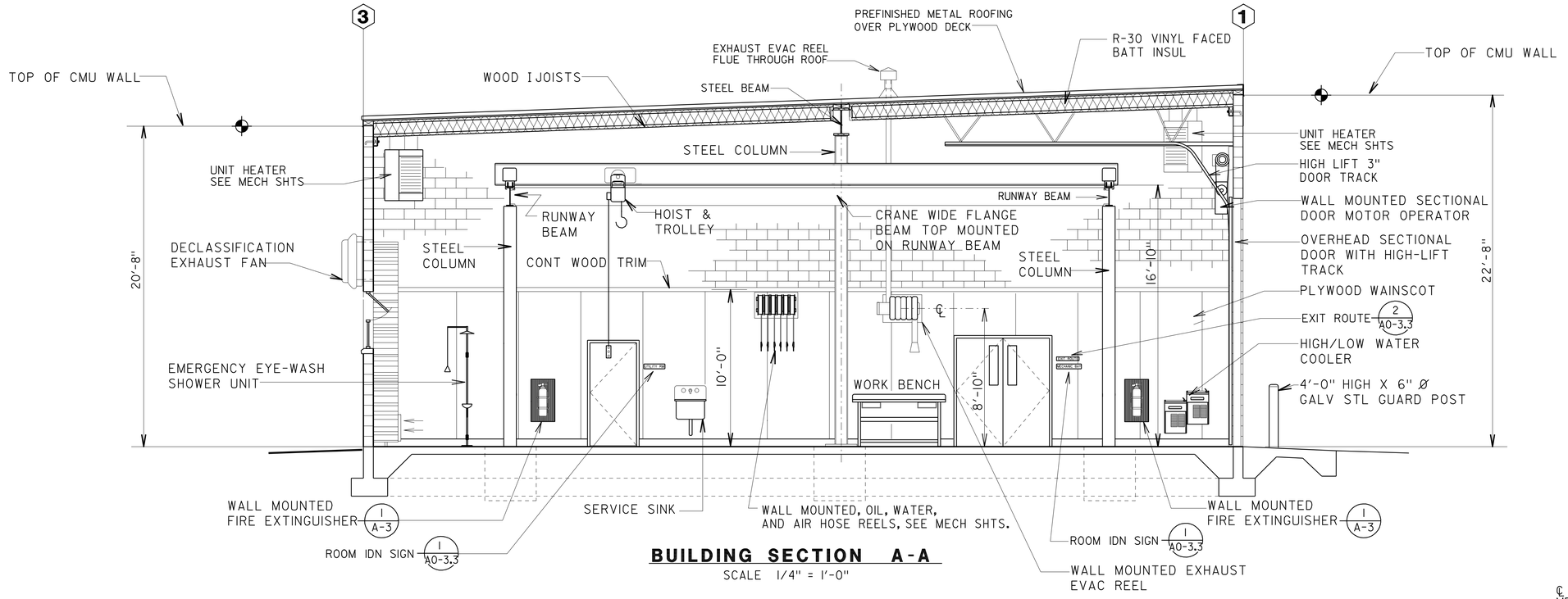

BUILDING SECTION A-A
SCALE 1/4" = 1'-0"

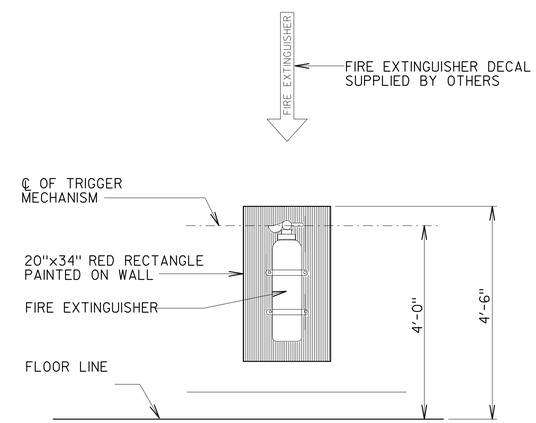

1 TYPICAL WALL MOUNTED FIRE EXTINGUISHER NTS

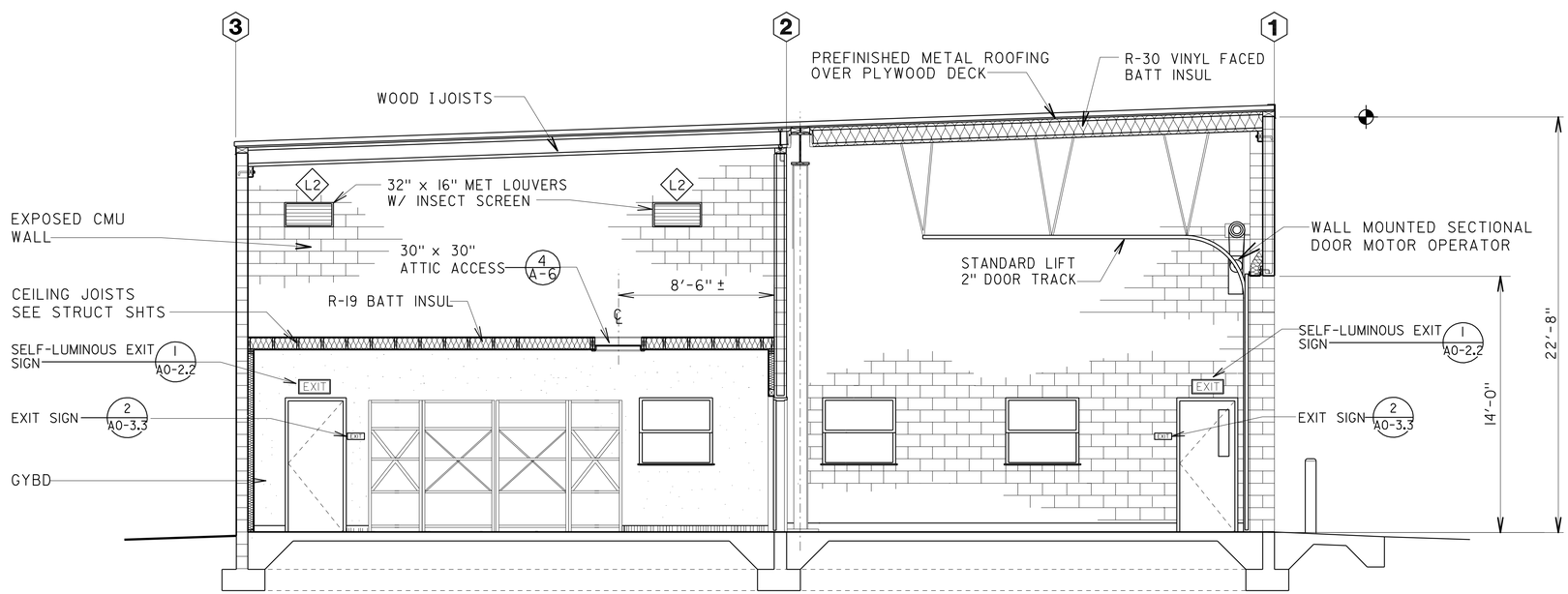

BUILDING SECTION B-B
SCALE 1/4" = 1'-0"

NOTE *The Contractor shall verify all controlling dimensions before ordering or fabricating any material*

DESIGN	BY Gary Harris	CHECKED	
DETAILS	BY Gary Harris	CHECKED	
QUANTITIES	BY	CHECKED	

STATE OF CALIFORNIA DEPARTMENT OF TRANSPORTATION

DIVISION OF ENGINEERING SERVICES ARCHITECTURAL AND STRUCTURAL DESIGN

BRIDGE NO. 17M5717
POST MILE 15.9

NEVADA CITY MAINTENANCE STATION RESIDENT MECHANIC'S FACILITY
BUILDING SECTIONS

SHEET **A-3**

a_03.dgn
DS OSD Imperial Rev. 11/98 20-JAN-2010 13:59

ORIGINAL SCALE IN INCHES FOR REDUCED PLANS 0 1 2 3

CU 03225
EA 318001

DISREGARD PRINTS BEARING EARLIER REVISION DATES →
REVISION DATES (PRELIMINARY STAGE ONLY)

SHEET 13 OF 20

20-JAN-2010 13:59
a_03.dgn

DIST.	COUNTY	ROUTE	POST MILES TOTAL PROJECT	SHEET NO.	TOTAL SHEETS
03	Nev	5717		47	106

LICENSED ARCHITECT — DATE 7/30/07

LICENSED ARCHITECT Warren Lai No. C-17122 Exp. 8/30/09 STATE OF CALIFORNIA

1-26-09
PLANS APPROVAL DATE

The State of California or its officers or agents shall not be responsible for the accuracy or completeness of electronic copies of this plan sheet.

ACCESSIBILITY DESIGN APPROVAL STAMP
DOT / DES / OTA
03-318001
DISTRICT - EA
Reviewed by: YA WANG
Date: 10-27-08

CALIFORNIA STATE FIRE MARSHAL APPROVED
Approval of this plan does not authorize or approve any omission or deviation from applicable regulations. Final approval is subject to field inspection. One set of approved plans shall be available on the project site at all times.
Reviewed by: JEFFREY SCHWARTZ
Approval date: 1/11/10

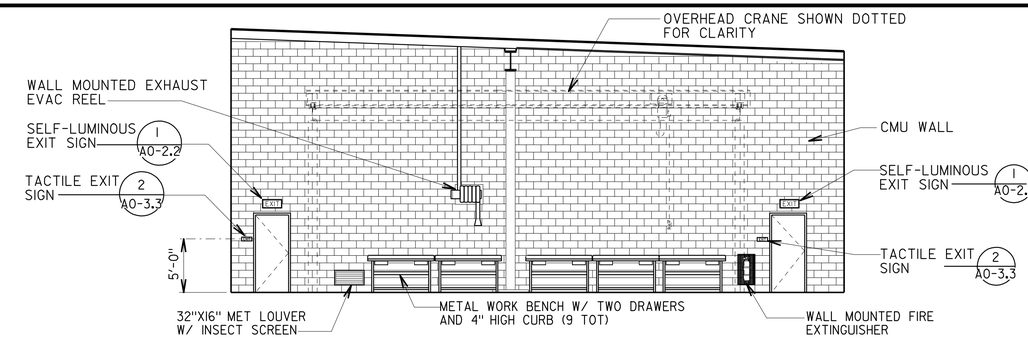

EAST ELEVATION
EQUIPMENT BAYS 5 1/8" = 1'-0"

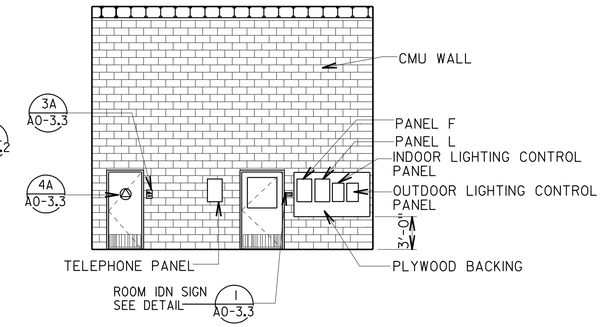

SOUTH ELEVATION
MECHANIC'S BAY 1 1/8" = 1'-0"

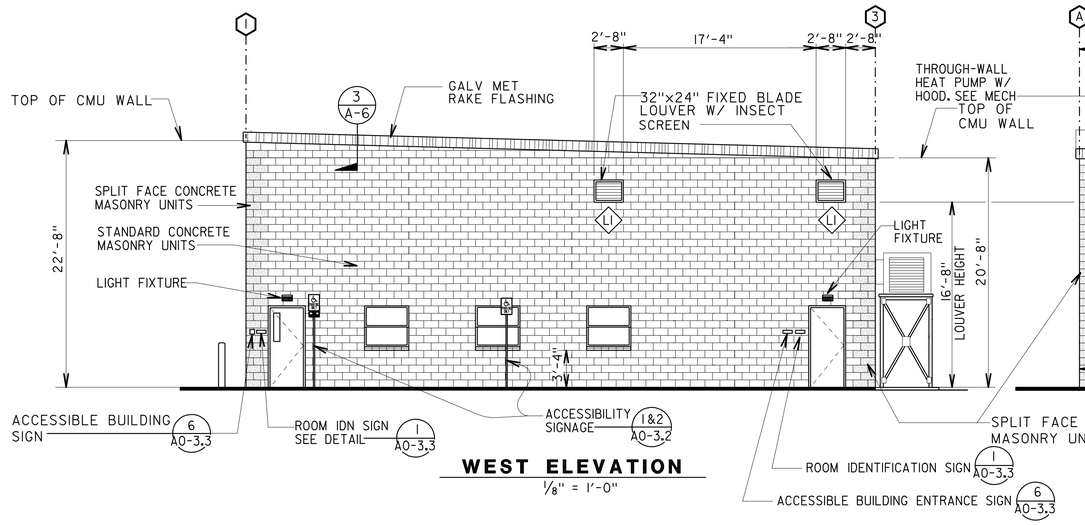

WEST ELEVATION
1/8" = 1'-0"

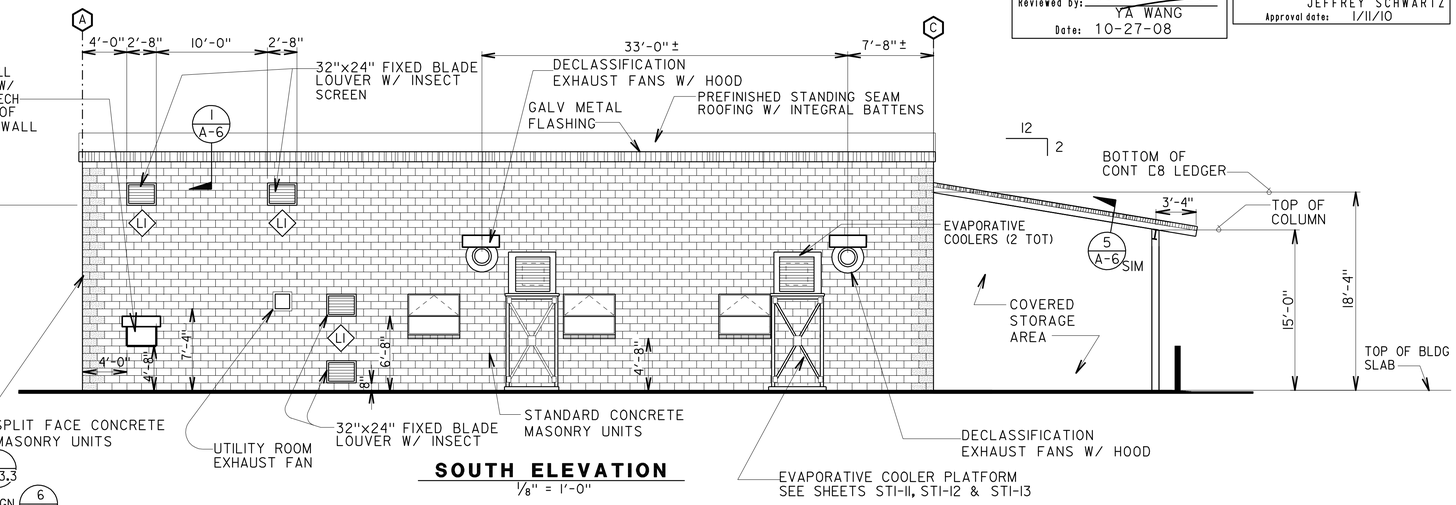

SOUTH ELEVATION
1/8" = 1'-0"

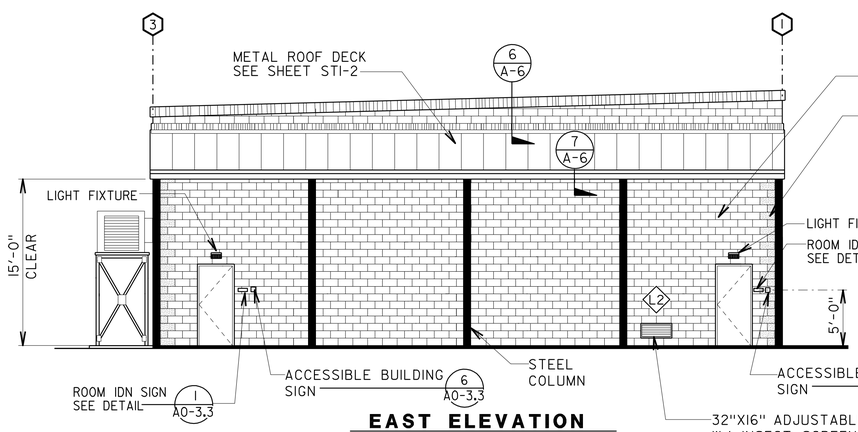

EAST ELEVATION
1/8" = 1'-0"

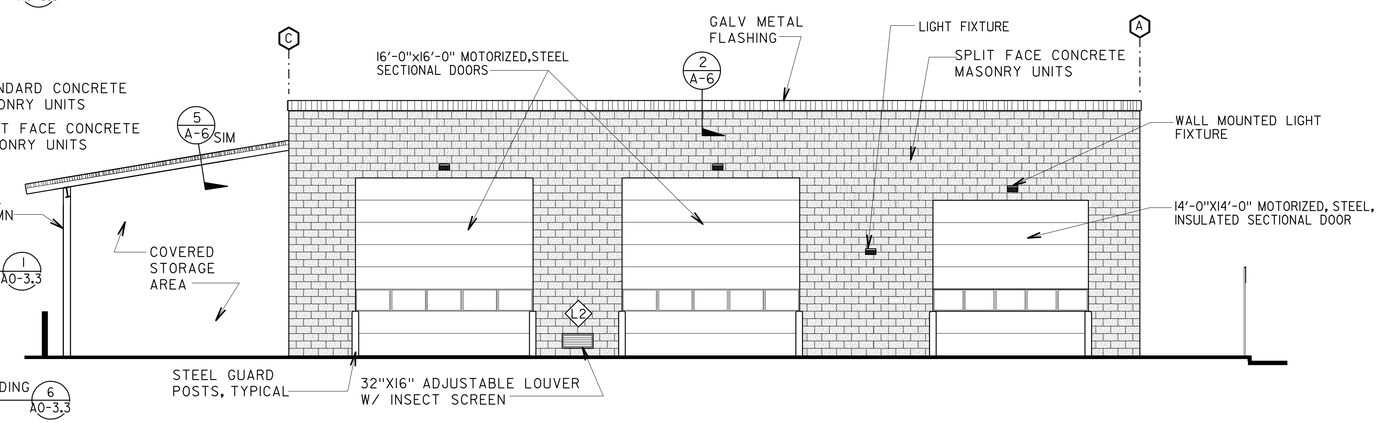

NORTH ELEVATION
1/8" = 1'-0"

NOTE *The Contractor shall verify all controlling dimensions before ordering or fabricating any material*

DESIGN	BY Gary Harris	CHECKED	
DETAILS	BY Gary Harris	CHECKED	
QUANTITIES	BY	CHECKED	

STATE OF CALIFORNIA
DEPARTMENT OF TRANSPORTATION

DIVISION OF ENGINEERING SERVICES
ARCHITECTURAL AND STRUCTURAL DESIGN

BRIDGE NO. 17M5717
POST MILE 15.9

NEVADA CITY MAINTENANCE STATION
RESIDENT MECHANIC'S FACILITY
EXTERIOR ELEVATIONS & INTERIOR ELEVATIONS

SHEET **A-4**

a_04.dgn
DS OSD Imperial Rev. 11/98 20-JAN-2010 13:59

ORIGINAL SCALE IN INCHES FOR REDUCED PLANS 0 1 2 3

CU 03225
EA 318001

DISREGARD PRINTS BEARING EARLIER REVISION DATES →
REVISION DATES (PRELIMINARY STAGE ONLY)

SHEET 14 OF 20

20-JAN-2010 13:59
a_04.dgn

DIST.	COUNTY	ROUTE	POST MILES TOTAL PROJECT	SHEET NO.	TOTAL SHEETS
03	Nev	5717		48	106

LICENSED ARCHITECT — DATE 7/30/07

LICENSED ARCHITECT Warren Lai No. C-17122 Exp. 8/30/09 STATE OF CALIFORNIA

1-26-09
PLANS APPROVAL DATE

The State of California or its officers or agents shall not be responsible for the accuracy or completeness of electronic copies of this plan sheet.

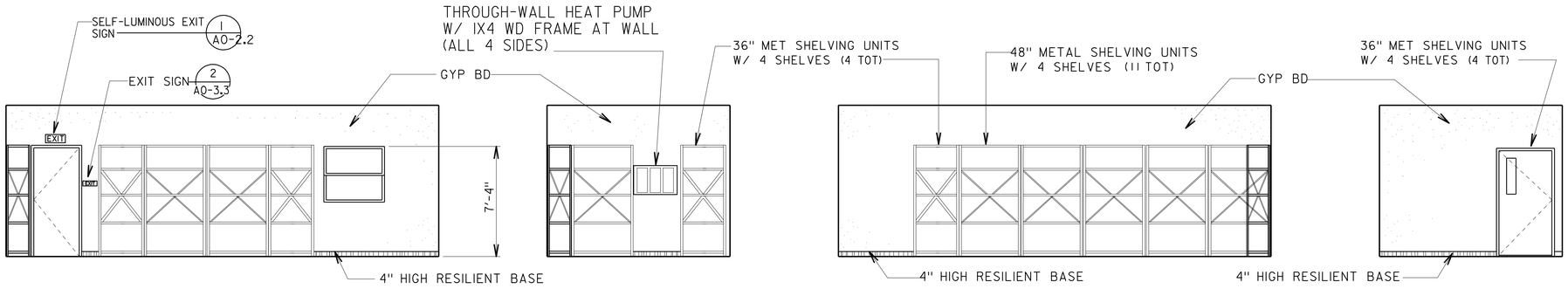

WEST ELEVATION — SOUTH ELEVATION — EAST ELEVATION — NORTH ELEVATION

OFFICE/PARTS ROOM 2

SCALE: 1/4"=1'-0"

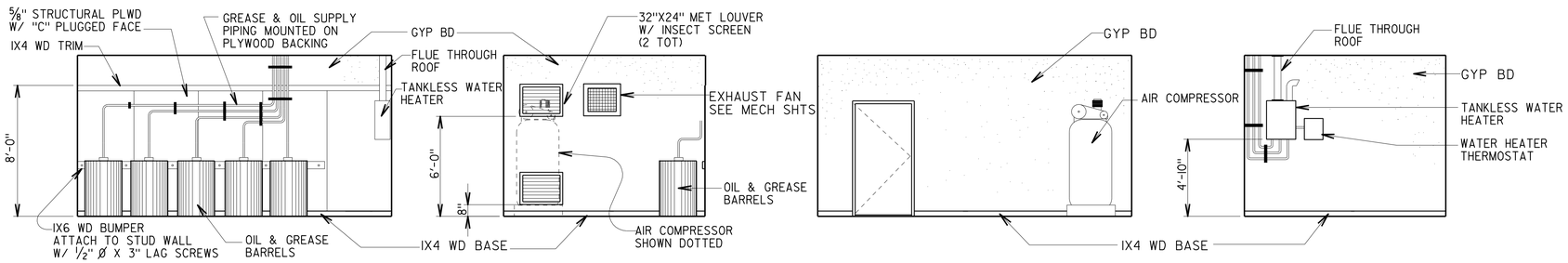

WEST ELEVATION — SOUTH ELEVATION — EAST ELEVATION — NORTH ELEVATION

UTILITY ROOM 3

SCALE: 1/4"=1'-0"

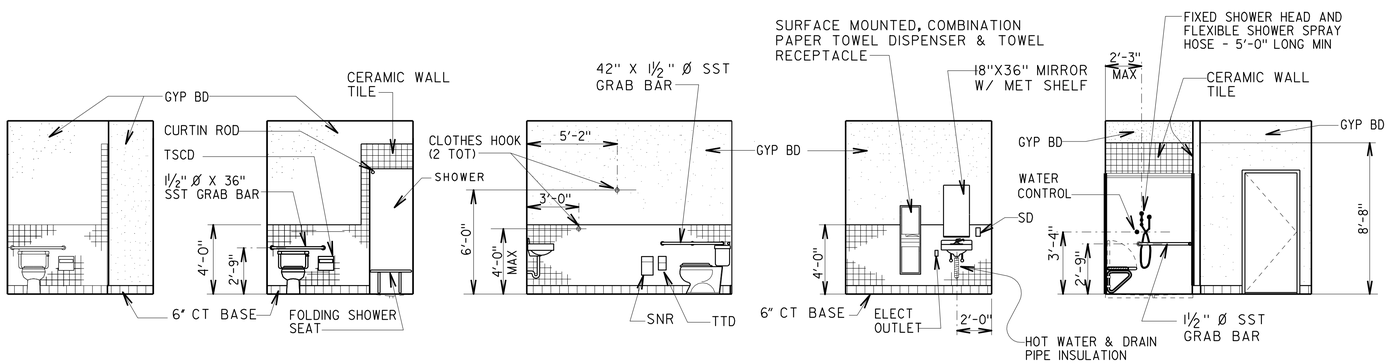

WEST ELEVATION AT WING WALL — WEST ELEVATION AT SHOWER — SOUTH ELEVATION — EAST ELEVATION — NORTH ELEVATION

UNISEX RESTROOM 4

SCALE: 1/4"=1'-0"

ACCESSIBILITY DESIGN APPROVAL STAMP
DOT / DES / OTA
03-318001
DISTRICT - EA
Reviewed by: YA WANG
Date: 10-27-08

CALIFORNIA STATE FIRE MARSHAL APPROVED
Approval of this plan does not authorize or approve any omission or deviation from applicable regulations. Final approval is subject to field inspection. One set of approved plans shall be available on the project site at all times.
Reviewed by: JEFFREY SCHWARTZ
Approval date: 1/11/10

NOTE *The Contractor shall verify all controlling dimensions before ordering or fabricating any material*

DESIGN	BY Gary Harris	CHECKED	
DETAILS	BY Gary Harris	CHECKED	
QUANTITIES	BY	CHECKED	

STATE OF CALIFORNIA DEPARTMENT OF TRANSPORTATION

DIVISION OF ENGINEERING SERVICES ARCHITECTURAL AND STRUCTURAL DESIGN

BRIDGE NO. 17M5717
POST MILE 15.9

NEVADA CITY MAINTENANCE STATION RESIDENT MECHANIC'S FACILITY

INTERIOR ELEVATIONS

SHEET A-5

a_05.dgn
DS OSD Imperial Rev. 11/98 20-JAN-2010 14:00

ORIGINAL SCALE IN INCHES FOR REDUCED PLANS 0 1 2 3

CU 03225
EA 318001

DISREGARD PRINTS BEARING EARLIER REVISION DATES →

REVISION DATES (PRELIMINARY STAGE ONLY) SHEET 15 OF 20

20-JAN-2010 14:00
a_05.dgn

DIST.	COUNTY	ROUTE	POST MILES TOTAL PROJECT	SHEET NO.	TOTAL SHEETS
03	Nev	5717		49	106

LICENSED ARCHITECT — DATE 7/30/07

LICENSED ARCHITECT Warren Lai No. C-17122 Exp. 8/30/09 STATE OF CALIFORNIA

1-26-09
PLANS APPROVAL DATE

The State of California or its officers or agents shall not be responsible for the accuracy or completeness of electronic copies of this plan sheet.

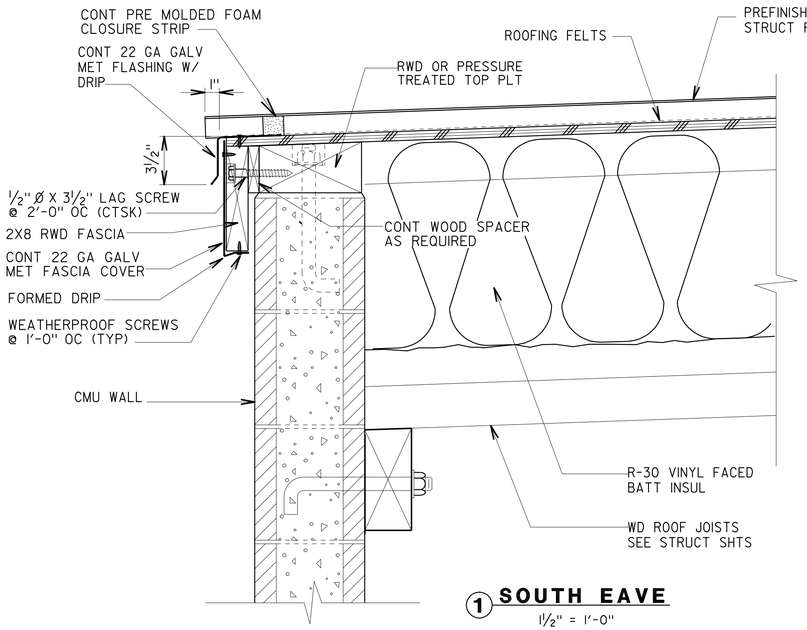

1 SOUTH EAVE
1½" = 1'-0"

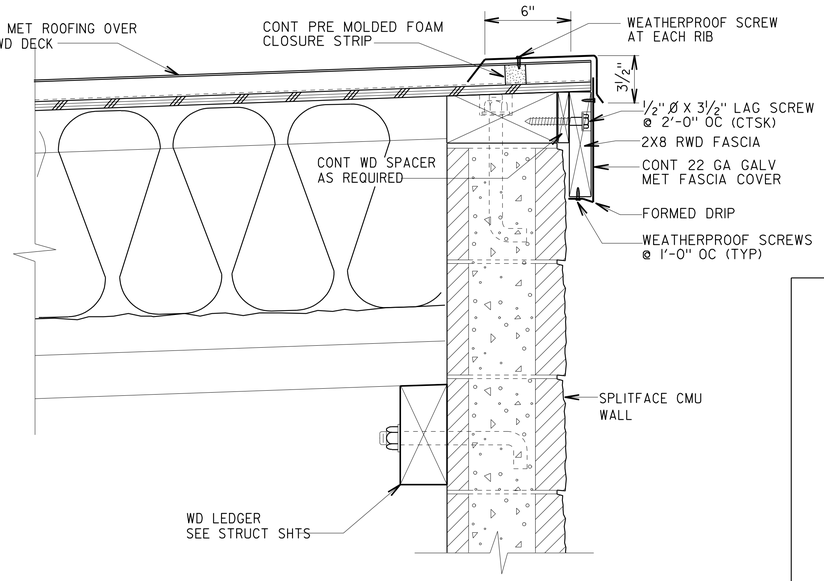

2 NORTH EAVE
1½" = 1'-0"

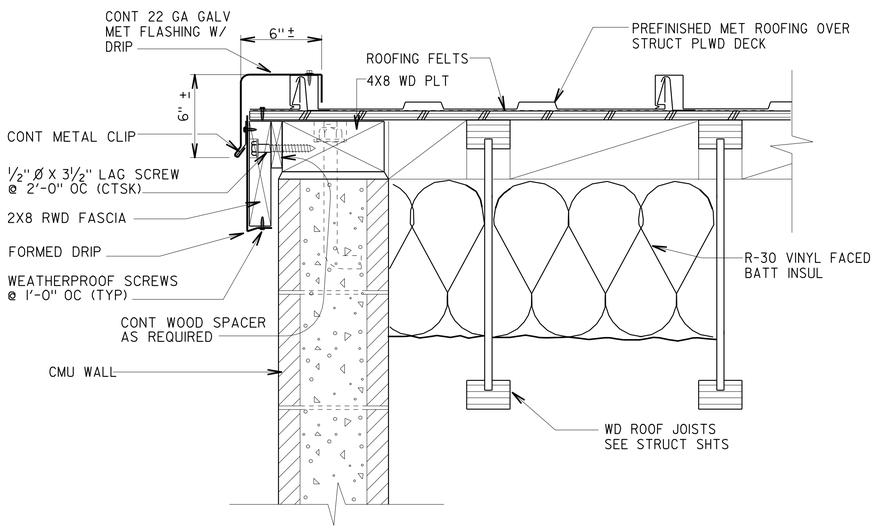

3 RAKE DETAIL
1½" = 1'-0"

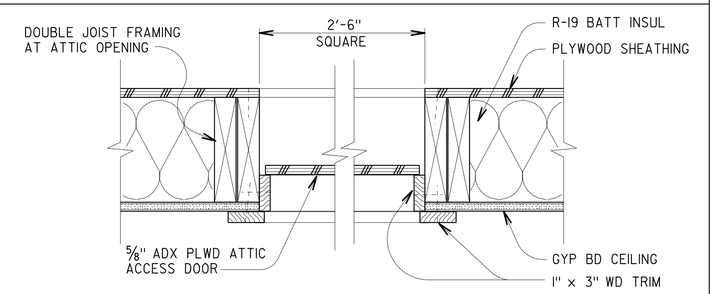

4 ATTIC ACCESS DETAIL
1½" = 1'-0"

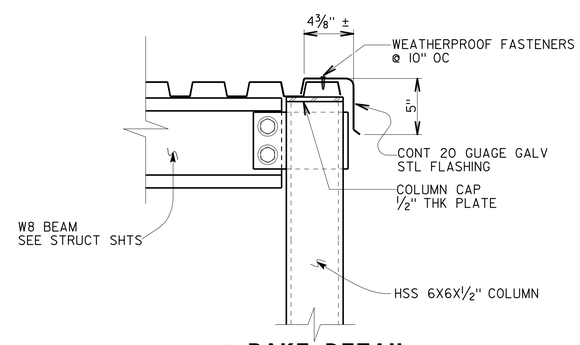

5 RAKE DETAIL AT CANOPY
1½" = 1'-0"

ACCESSIBILITY DESIGN APPROVAL STAMP
DOT / DES / OTA
03-318001
DISTRICT - EA
Reviewed by: YA WANG
Date: 10-27-08

CALIFORNIA STATE FIRE MARSHAL APPROVED
Approval of this plan does not authorize or approve any omission or deviation from applicable regulations. Final approval is subject to field inspection. One set of approved plans shall be available on the project site at all times.
Reviewed by: JEFFREY SCHWARTZ
Approval date: 1/11/10

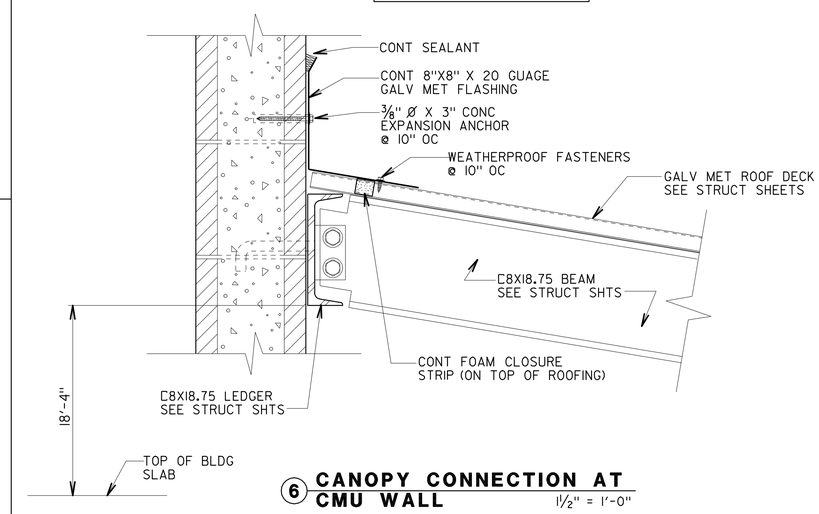

6 CANOPY CONNECTION AT CMU WALL
1½" = 1'-0"

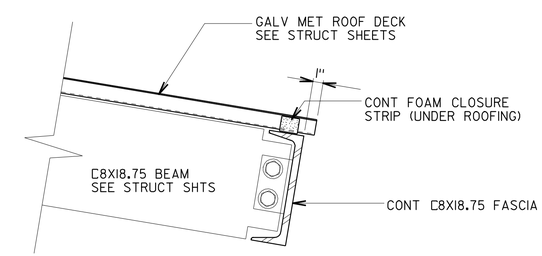

7 LOWER EAVE DETAIL AT CANOPY
1½" = 1'-0"

NOTE *The Contractor shall verify all controlling dimensions before ordering or fabricating any material*

	BY	CHECKED
DESIGN	Gary Harris	
DETAILS	Gary Harris	
QUANTITIES		

STATE OF CALIFORNIA
DEPARTMENT OF TRANSPORTATION

DIVISION OF ENGINEERING SERVICES
ARCHITECTURAL AND STRUCTURAL DESIGN

BRIDGE NO. 17M5717
POST MILE 15.9

NEVADA CITY MAINTENANCE STATION RESIDENT MECHANIC'S FACILITY
BUILDING DETAILS

SHEET **A-6**

a_06.dgn
DS OSD Imperial Rev. 11/98 20-JAN-2010 14:00

ORIGINAL SCALE IN INCHES FOR REDUCED PLANS 0 1 2 3

CU 03225
EA 318001

DISREGARD PRINTS BEARING EARLIER REVISION DATES →
REVISION DATES (PRELIMINARY STAGE ONLY)

SHEET 16 OF 20

20-JAN-2010 14:00
a_06.dgn

DIST.	COUNTY	ROUTE	POST MILES TOTAL PROJECT	SHEET NO.	TOTAL SHEETS
03	Nev	5717		50	106

LICENSED ARCHITECT — DATE 7/30/07

LICENSED ARCHITECT Warren Lai No. C-17122 Exp. 8/30/09 STATE OF CALIFORNIA

1-26-09
PLANS APPROVAL DATE

The State of California or its officers or agents shall not be responsible for the accuracy or completeness of electronic copies of this plan sheet.

ACCESSIBILITY DESIGN APPROVAL STAMP DOT / DES / OTA
03-318001
DISTRICT - EA
Reviewed by: YA WANG
Date: 10-27-08

CALIFORNIA STATE FIRE MARSHAL APPROVED
Approval of this plan does not authorize or approve any omission or deviation from applicable regulations. Final approval is subject to field inspection. One set of approved plans shall be available on the project site at all times.
Reviewed by: JEFFREY SCHWARTZ
Approval date: 1/11/10

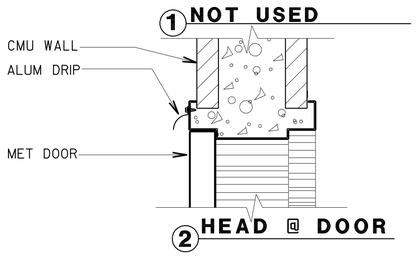

1 NOT USED

2 HEAD @ DOOR

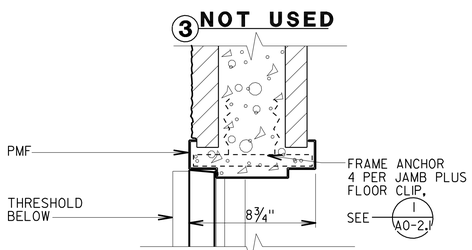

3 NOT USED

4 JAMB

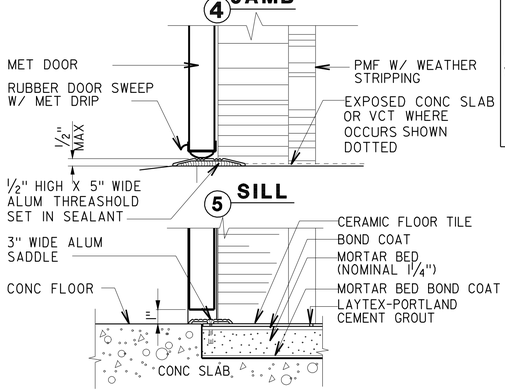

5 SILL

6 SILL @ CT FLOOR

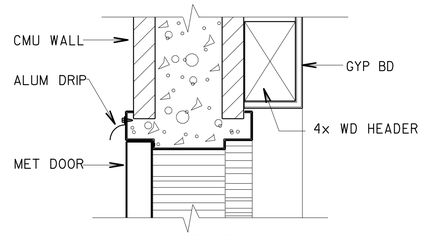

8 HEAD

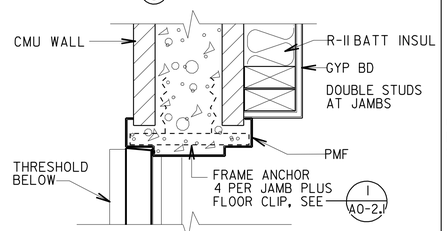

9 JAMB

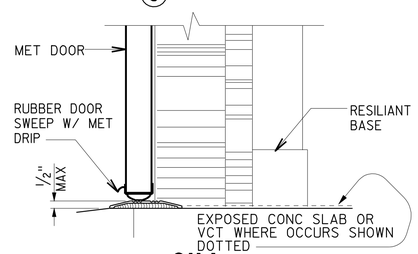

10 SILL

EXTERIOR DOOR DETAILS WITH FURRED STUD WALL 1½" = 1'-0"

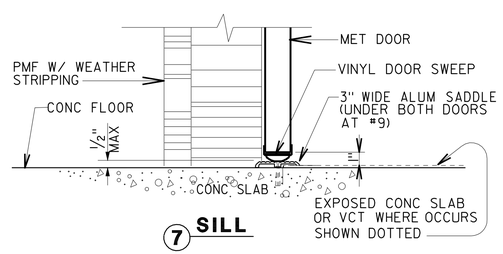

7 SILL

DOOR DETAILS AT MASONRY WALLS 1½" = 1'-0"

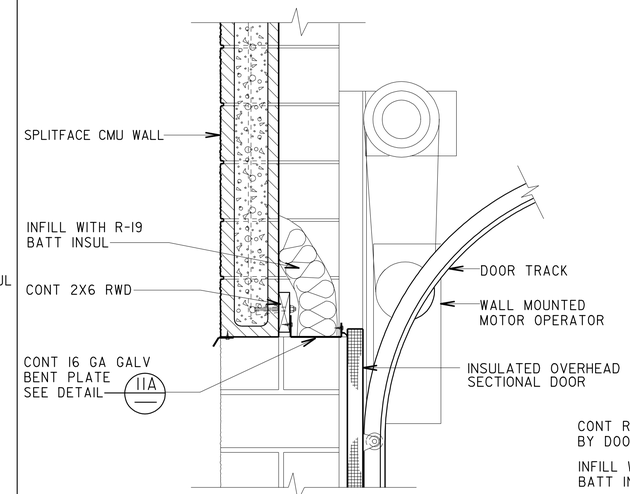

11 HEAD

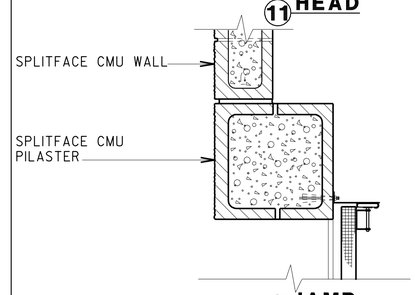

12 JAMB

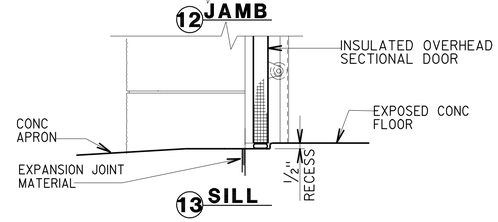

13 SILL

OVERHEAD DOOR DETAILS
1"=1'-0"

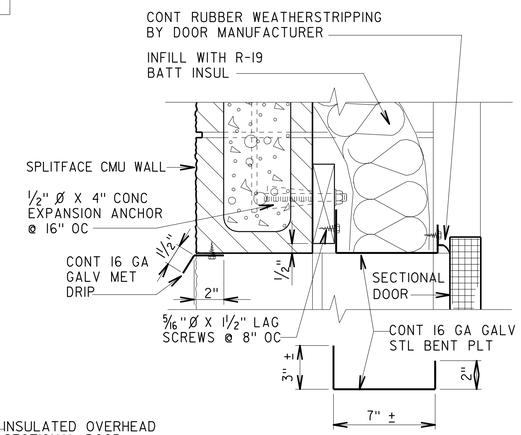

11A HEAD DETAIL
1½" = 1'-0"

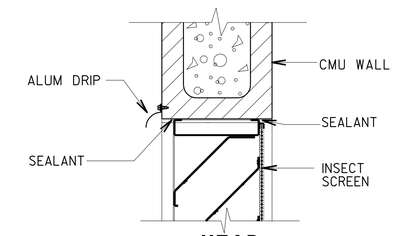

14 HEAD

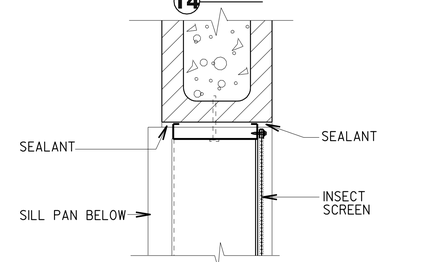

15 JAMB

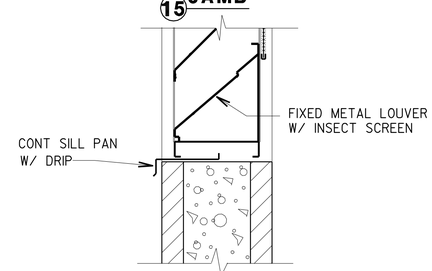

16 SILL

BUILDING LOUVER AT CMU WALL
1½" = 1'-0"

NOTE *The Contractor shall verify all controlling dimensions before ordering or fabricating any material*

	BY		CHECKED
DESIGN	BY	Gary Harris	CHECKED
DETAILS	BY	Gary Harris	CHECKED
QUANTITIES	BY		CHECKED

STATE OF CALIFORNIA
DEPARTMENT OF TRANSPORTATION

DIVISION OF ENGINEERING SERVICES
ARCHITECTURAL AND STRUCTURAL DESIGN

BRIDGE NO. 17M5717
POST MILE 15.9

NEVADA CITY MAINTENANCE STATION RESIDENT MECHANIC'S FACILITY
DOOR AND LOUVER DETAILS

SHEET A-7

a_07.dgn
DS OSD Imperial Rev. 11/98 20-JAN-2010 14:00

ORIGINAL SCALE IN INCHES FOR REDUCED PLANS 0 1 2 3

CU 03225
EA 318001

DISREGARD PRINTS BEARING EARLIER REVISION DATES → 4/30/07

REVISION DATES (PRELIMINARY STAGE ONLY) | SHEET 17 | OF 20

20-JAN-2010 14:00
a_07.dgn

DIST.	COUNTY	ROUTE	POST MILES TOTAL PROJECT	SHEET NO.	TOTAL SHEETS
03	Nev	5717		51	106

LICENSED ARCHITECT 7/30/07 DATE

LICENSED ARCHITECT Warren Lai No. C-17122 Exp. 8/30/09 STATE OF CALIFORNIA

1-26-09
PLANS APPROVAL DATE

The State of California or its officers or agents shall not be responsible for the accuracy or completeness of electronic copies of this plan sheet.

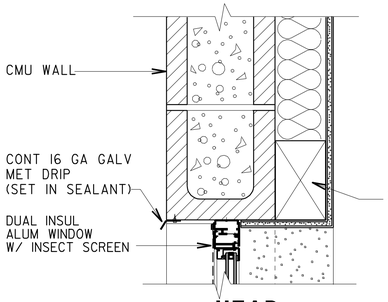

1 HEAD

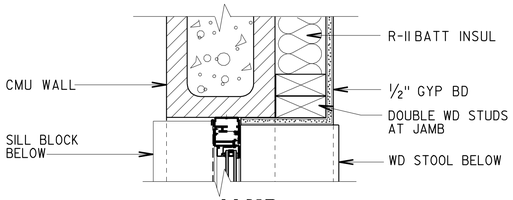

2 JAMB

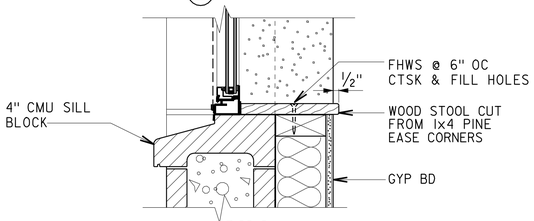

3 SILL

ALUMINUM WINDOW DETAILS WITH FURRED STUD WALL 1 1/2" = 1'-0"

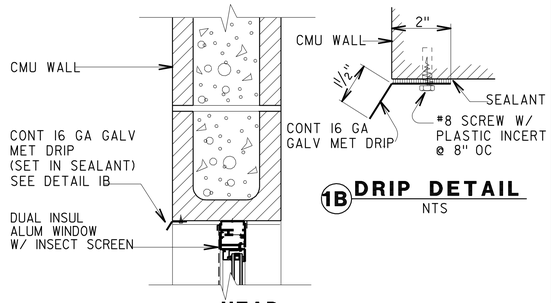

1B DRIP DETAIL
NTS

4 HEAD

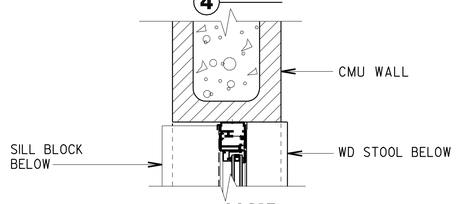

5 JAMB

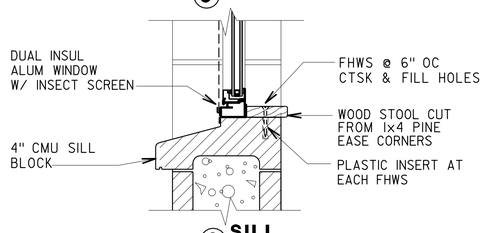

6 SILL

ALUMINUM WINDOW DETAILS
1 1/2" = 1'-0"

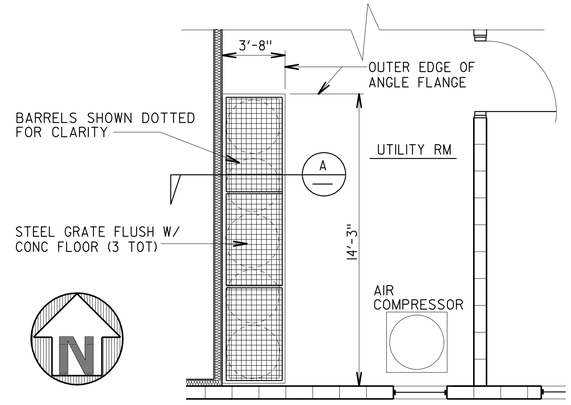

PARTIAL PLAN - UTILITY ROOM
NTS

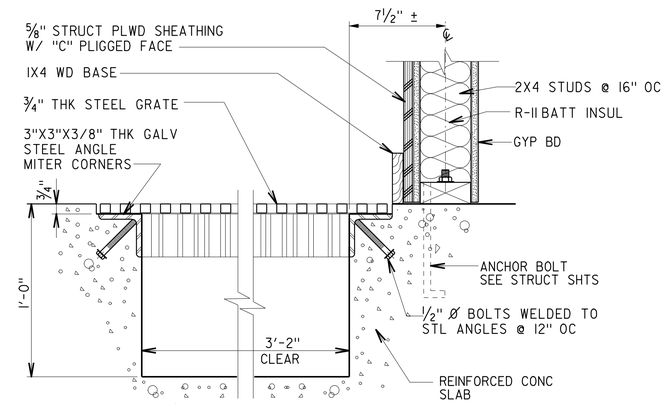

A DETAIL SECTION
NTS

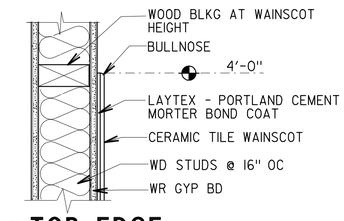

9 TOP EDGE TILE WAINSCOT

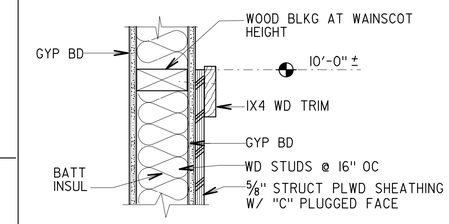

10 TOP EDGE PLYWOOD WAINSCOT

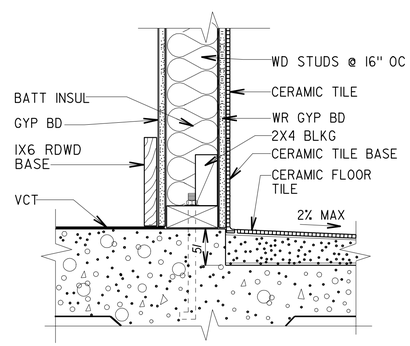

7 WALL DETAIL
1 1/2" = 1'-0"

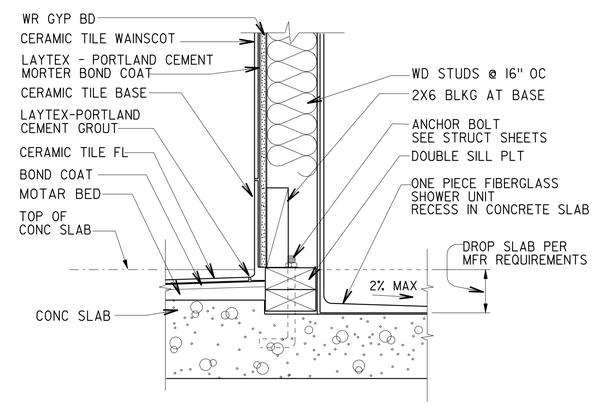

8 TILE BASE DETAIL
1 1/2" = 1'-0"

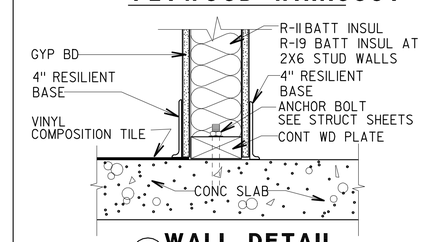

11 WALL DETAIL

NOTE *The Contractor shall verify all controlling dimensions before ordering or fabricating any material*

ACCESSIBILITY DESIGN APPROVAL STAMP
DOT / DES / OTA
03-318001
DISTRICT - EA
Reviewed by: YA WANG
Date: 10-27-08

CALIFORNIA STATE FIRE MARSHAL APPROVED
Approval of this plan does not authorize or approve any omission or deviation from applicable regulations. Final approval is subject to field inspection. One set of approved plans shall be available on the project site at all times.
Reviewed by: JEFFREY SCHWARTZ
Approval date: 1/11/10

DESIGN	BY Gary Harris	CHECKED	
DETAILS	BY Gary Harris	CHECKED	
QUANTITIES	BY	CHECKED	

STATE OF CALIFORNIA
DEPARTMENT OF TRANSPORTATION

DIVISION OF ENGINEERING SERVICES
ARCHITECTURAL AND STRUCTURAL DESIGN

BRIDGE NO. 17M5717
POST MILE 15.9

NEVADA CITY MAINTENANCE STATION RESIDENT MECHANIC'S FACILITY

WINDOW AND MISCELLANEOUS DETAILS

SHEET **A-8**

a_08.dgn
DS OSD Imperial Rev. 11/98 20-JAN-2010 14:01

ORIGINAL SCALE IN INCHES FOR REDUCED PLANS 0 1 2 3

CU 03225
EA 318001

DISREGARD PRINTS BEARING EARLIER REVISION DATES → 4/30/07

REVISION DATES (PRELIMINARY STAGE ONLY)

SHEET 18 OF 20

20-JAN-2010 14:01
a_08.dgn

DIST.	COUNTY	ROUTE	POST MILES TOTAL PROJECT	SHEET NO.	TOTAL SHEETS
03	Nev	5717		52	106

LICENSED ARCHITECT — DATE 7/30/07

LICENSED ARCHITECT Warren Lai No. C-17122 Exp. 8/30/09 STATE OF CALIFORNIA

1-26-09
PLANS APPROVAL DATE

The State of California or its officers or agents shall not be responsible for the accuracy or completeness of electronic copies of this plan sheet.

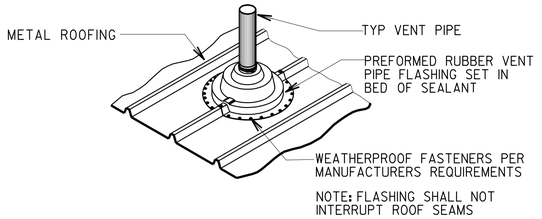

1 ROOF VENT FLASHING
NTS

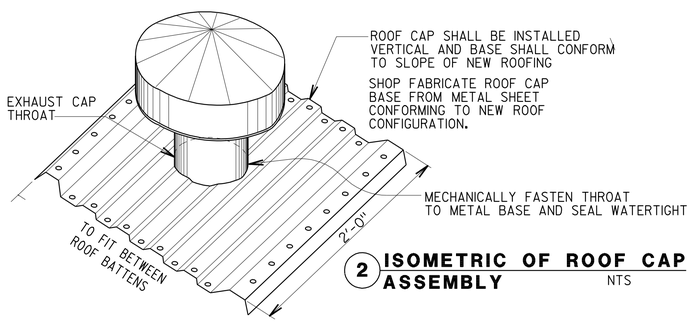

2 ISOMETRIC OF ROOF CAP ASSEMBLY
NTS

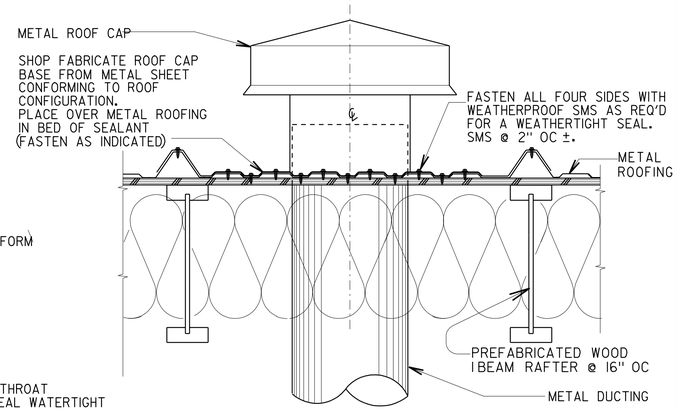

3 EXHAUST FAN ROOF CAP
NTS

8 NOT USED

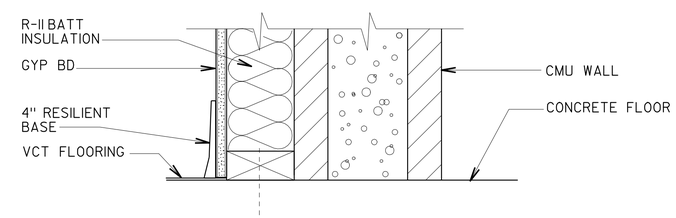

9 WALL DETAIL
NTS

4 NOT USED

5 NOT USED

6 NOT USED

7 NOT USED

NOTE *The Contractor shall verify all controlling dimensions before ordering or fabricating any material*

ACCESSIBILITY DESIGN APPROVAL STAMP
DOT / DES / OTA
03-318001
DISTRICT - EA
Reviewed by: YA WANG
Date: 10-27-08

CALIFORNIA STATE FIRE MARSHAL APPROVED
Approval of this plan does not authorize or approve any omission or deviation from applicable regulations. Final approval is subject to field inspection. One set of approved plans shall be available on the project site at all times.
Reviewed by: JEFFREY SCHWARTZ
Approval date: 1/11/10

DESIGN	BY Gary Harris	CHECKED	
DETAILS	BY Gary Harris	CHECKED	
QUANTITIES	BY	CHECKED	

STATE OF CALIFORNIA
DEPARTMENT OF TRANSPORTATION

DIVISION OF ENGINEERING SERVICES
ARCHITECTURAL AND STRUCTURAL DESIGN

BRIDGE NO. 17M5717
POST MILE 15.9

NEVADA CITY MAINTENANCE STATION
RESIDENT MECHANIC'S FACILITY
MISCELLANEOUS DETAILS

SHEET **A-9**

a_09.dgn
DS OSD Imperial Rev. 11/98 20-JAN-2010 14:01

ORIGINAL SCALE IN INCHES FOR REDUCED PLANS 0 1 2 3

CU 03225
EA 318001

DISREGARD PRINTS BEARING EARLIER REVISION DATES → 11/8/07

REVISION DATES (PRELIMINARY STAGE ONLY)

SHEET 19 OF 20

20-JAN-2010 14:01
a_09.dgn

DIST.	COUNTY	ROUTE	POST MILES TOTAL PROJECT	SHEET NO.	TOTAL SHEETS
03	Nev	5717		53	106

LICENSED ARCHITECT — DATE 7/30/07

LICENSED ARCHITECT Warren Lai No. C-17122 Exp. 8/30/09 STATE OF CALIFORNIA

1-26-09
PLANS APPROVAL DATE

The State of California or its officers or agents shall not be responsible for the accuracy or completeness of electronic copies of this plan sheet.

ACCESSIBILITY DESIGN APPROVAL STAMP
DOT / DES / OTA
03-318001
DISTRICT - EA
Reviewed by: YA WANG
Date: 10-27-08

CALIFORNIA STATE FIRE MARSHAL APPROVED
Approval of this plan does not authorize or approve any omission or deviation from applicable regulations. Final approval is subject to field inspection. One set of approved plans shall be available on the project site at all times.
Reviewed by: JEFFREY SCHWARTZ
Approval date: 1/11/10

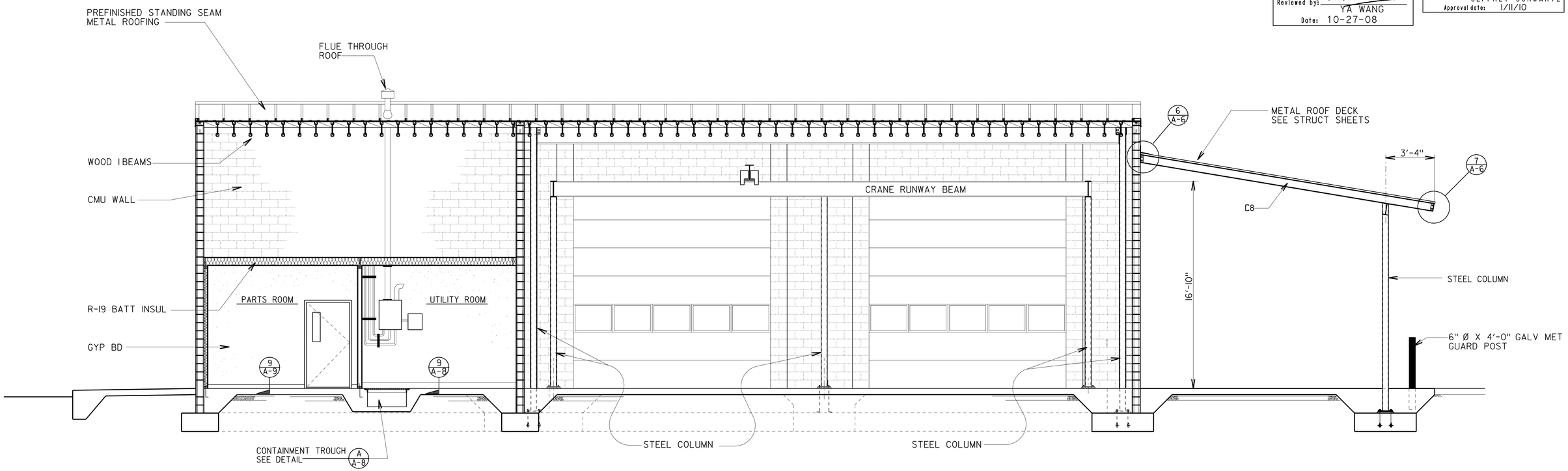

BUILDING SECTION C-C

1/4" = 1'-0"

NOTE *The Contractor shall verify all controlling dimensions before ordering or fabricating any material*

DESIGN	BY Gary Harris	CHECKED	
DETAILS	BY Gary Harris	CHECKED	
QUANTITIES	BY	CHECKED	

STATE OF CALIFORNIA DEPARTMENT OF TRANSPORTATION

DIVISION OF ENGINEERING SERVICES ARCHITECTURAL AND STRUCTURAL DESIGN

BRIDGE NO. 17M5717
POST MILE 15.9

NEVADA CITY MAINTENANCE STATION RESIDENT MECHANIC'S FACILITY
BUILDING SECTION C-C

SHEET **A-10**

a_10.dgn
DS OSD Imperial Rev. 11/98 20-JAN-2010 14:01

ORIGINAL SCALE IN INCHES FOR REDUCED PLANS 0 1 2 3

CU 03225
EA 318001

DISREGARD PRINTS BEARING EARLIER REVISION DATES →
REVISION DATES (PRELIMINARY STAGE ONLY) SHEET 20 OF 20

20-JAN-2010 14:01
a_10.dgn

DIST.	COUNTY	ROUTE	POST MILES TOTAL PROJECT	SHEET NO.	TOTAL SHEETS
03	Nev	5717		54	106

REGISTERED CIVIL ENGINEER — DATE: 10-30-08

REGISTERED PROFESSIONAL ENGINEER — Joseph F. Camilleri — No. 3656 — Exp. 3-31-10 — STRUCTURAL — STATE OF CALIFORNIA

1-26-09
PLANS APPROVAL DATE

The State of California or its officers or agents shall not be responsible for the accuracy or completeness of electronic copies of this plan sheet.

ABBREVIATIONS

AAD	Adhesive Anchorage Device
AB	Anchor Bolt
AC	Asphalt Concrete
Alt	Alternate
APA	American Plywood Association
APC	Alternative Pipe Culvert
Bldg	Building
Blkg	Blocking
BN	Boundary Nailing
Btm	Bottom
CB	Carriage Bolt
CIDH	Cast In Drilled Hole
CJ	Control Joint
Clr	Clear
CMU	Concrete Masonry Unit
Conc	Concrete
Const	Construction
Cont	Continuous
CP	Complete Penetration Weld
Dbl	Double
DF	Douglas Fir
Dia	Diameter
DIP	Ductile Iron Pipe
DN	Diameter Nominal
do	Ditto
(E)	Existing
Ea	Each
EL	Elevation
Elec	Electrical
Embed	Embedment
EN	Edge Nail
Eq	Equal
Exp	Expansion
FDGM	Free Draining Granular Material
FG	Finish Grade
FL	Flow Line
Flr	Floor
FN	Face (Field) Nail
FOC	Face of Concrete
FOM	Face of Masonry
FOS	Face of Stud
Ftg	Footing
Ga	Gage
Galv	Galvanized
GLM	Glue Laminated Member
Gyp Bd	Gypsum Board
HD	Holdown
Hex	Hexagon
Horiz	Horizontal
HSB	High Strength Bolt
HSS	Hollow Structural Section
Jt	Joint
LOL	Layout Line
LVL	Laminated Veneer Lumber
m	Meter
Max	Maximum
MEA	Mechanical Expansion Anchor
Mech	Mechanical
Mfr	Manufacturer
mm	Millimeter
Min	Minimum
MIW	Malleable Iron Washer
OC	On Center
OG	Original Grade
OH	Opposite Hand
Opt	Optional
P	Pitch
PDF	Powder Driven Fastener
Plwd	Plywood
PT	Pressure Treated
PW	Puddle Weld
PWB	Prefabricated Wood I Beam
RCP	Reinforced Concrete Pipe
Reinf	Reinforced, Reinforcing
Req'd	Required
SDSTS	Self Drill, Self Tap Screw
Sim	Similar
SPS	Structural Plywood Sheathing
Sq	Square
Stagg	Staggered
Std	Standard
SW	Stud Weld
Sym	Symmetrical
T&G	Tongue-and-Groove
TN	Toe Nail
TS	Tube Steel
Typ	Typical
UON	Unless Otherwise Noted
Vert	Vertical

SYMBOLS

- Blocking In Section or Elevation
- Continuous Member In Section
- End of Member
- Bearing Wall
- Shear Wall
- X XXXX — Length; Shearwall Schedule Symbol; Reference
- Glue Laminated Member Section
- North Arrow
- X STX-X — Partial Section Cut
- X STX-X — Full Section Cut
- X — Revision Callout
- A — Grid Line Indicator
- ℄ — Center Line
- ⅊ — Station Line
- ℙ — Steel Plate
- Ø — Diameter
- ⌑ — Square
- CMU Wall on Plan Views
- Dropped Slab on Plan Views
- Reinforced Concrete
- Sand
- Structural Backfill
- Structural Excavation
- Original Ground
- Limits of Structural Backfill (shown on plan view)
- Free Draining Granular Material
- X — Bottom of Footing
- Elevation or Working Point
- Existing Features
- Holdown, Typ — Simpson / USP / Equal (Manufacturers are those noted in the order shown.)
- Frame Connector — Simpson / USP / Equal (Manufacturers are those noted in the order shown.)
- 3 ST-1 5b — Detail Number or Note Number; Additional Reference (If required); Sheet Number

(A) DESIGN NOTES

1. Design: The building work on this project has been designed to conform to the 2001 California Building Code.
2. Loads : Live Loads : Roof 20 PSF
   Roof Snow Loads : 32 PSF
   Wind Speed : 80 MPH, Exposure C
   Seismic Zone : 3
3. Structural Steel : f_y = 50,000 PSI Min
   Structural Tube: f_y = 46,000 PSI Min
4. Reinforced Concrete Masonry Units (Allowable Stress Design)
   f'm = 2,000 psi
   fy = 60,000 psi
   Concrete Masonry Units fully grouted and special inspection.
5. Reinforced Concrete : f'_c = 3,000 PSI
   f_y = 60,000 PSI
6. Foundation :
   Soils report dated: July 26, 2007
   Allowable Soil Pressure (Dead Load + Live Load): 2,000 psf
   See Log of Test Borings sheet.
7. All Miscellaneous Metal to be hot-dip galvanized after fabrication.
8. Building dimensions are based on CMU block module of 8" x 8" x 16".
9. Mechanical Expansion Anchors shall be 5/8" dia and have 4" minimum embedment, 3'-0" max spacing and placed 6" maximum spacing from ends, two minimum per connection, unless otherwise shown.

NOTE: SPECIFIC DETAILS OR NOTES ON OTHER SHEETS SHALL PREVAIL OVER STANDARD DETAILS AND NOTES ON THIS SHEET

STANDARD DRAWING

FILE NO. XS-25-0	DESIGN BY Sean Samul	CHECKED Eric Schuster	APPROVED R.E. Travis
DRAWING DATE 1-04	DETAILS BY George E. Rowe	CHECKED Eric Schuster	DESIGN SUPERVISOR
	SUBMITTED BY Sean Samul	, DESIGN ENGINEER	

DOES SD Imperial Rev. 9/02

ORIGINAL SCALE IN INCHES FOR REDUCED PLANS 0 1 2 3

STATE OF CALIFORNIA
DEPARTMENT OF TRANSPORTATION

DIVISION OF ENGINEERING SERVICES
ARCHITECTURAL AND STRUCTURAL DESIGN

CU 03225
EA 318001

BRIDGE NO. 17M5717
POST MILE 15.9

NEVADA CITY MAINTENANCE STATION
RESIDENT MECHANIC'S FACILITY

LEGEND

SHEET **ST-0**

DISREGARD PRINTS BEARING EARLIER REVISION DATES →
REVISION DATES (PRELIMINARY STAGE ONLY) SHEET OF

20-JAN-2010 14:02
st_00.dgn

Joseph Camilleri 10-30-08
REGISTERED CIVIL ENGINEER

REGISTERED PROFESSIONAL ENGINEER — Joseph F. Camilleri — No. 3656 — Exp. 3-31-10 — STRUCTURAL — STATE OF CALIFORNIA

1-26-09
PLANS APPROVAL DATE

The State of California or its officers or agents shall not be responsible for the accuracy or completeness of electronic copies of this plan sheet.

(A) FRAMING NOTES

1. Dimensions are typically shown to face of stud for exterior walls, to centerline of stud at interior walls, and to centerline of openings. Vertical dimensions are typically shown from rough floor or slab to top of plate or to underside of lintels. Dimensions shown as "clear" are from surface to surface.
2. Bearing, shear and exterior walls shall be sheathed with $\frac{3}{8}$" structural plywood sheathing.
3. All roofs shall be sheathed with $\frac{5}{8}$" structural plywood sheathing.
4. Plywood for floors and roofs shall be placed face grain perpendicular to supports. Where possible, plywood shall be placed in full sheets and staggered one-half sheet length. Any partial plywood sheet shall not be less than 2'-0" in length or width unless fully blocked. Plywood for wainscots, siding and wall sheathing may be placed parallel to framing and with the C-C plugged face exposed. See Detail 2, sheet ST-1B.
5. All wood members shall be Douglas Fir-Larch (DF) quality grade stamped. Grade stamps shall indicate compliance with the grading requirements of WWPA, WCLIB or other approved lumber inspection agency.
6. Structural plywood sheathing shall be APA grade stamped plywood conforming to Voluntary Product Standard PS1, Grade C-D, Exposure 1. Thickness and span rating shall be as shown on the plans.
7. Wood grades (unless otherwise noted):
   - A. For horizontal members:
     - Joists & Rafters — Grade #2
     - Beams & Stringers — Grade #1
     - Ledgers — Grade #1
   - B. For vertical members:
     - 2"x4" Studs — Construction Grade
     - 2"x6" & larger studs — Grade #2
     - Posts & Timbers — Grade #1
   - C. Glue laminated beams:
     - Simple spans — 24F-V4 DF/DF
     - Cantilevers & Continuous — 24F-V8 DF/DF
8. Glue laminated members shall be engineered, stress rated and factory laminated with adhesive for wet use.
9. Exposed members shall be "architectural appearance" grade and non-exposed members shall be "industrial appearance" grade.
10. All wood in direct contact with concrete or masonry shall be pressure treated Douglas Fir-Larch.
11. Joists framed into the side of wood girders shall be supported by joist hangers.
12. Joists shall be supported laterally at the ends and at each support by solid blocking or other approved means except where the ends of joists are nailed to a header, band or rim joist or to an adjoining stud. Solid blocking shall not be less than 2"x in thickness and the full depth of the joist.
13. Joists and roof rafters 1'-0" or deeper shall have full depth 2"x thick solid blocking at 8'-0" maximum spacing.
14. Provide 2"x blocking to secure fixtures shown on the project plans.
15. Joists under and parallel to bearing walls shall be doubled.
16. When there are multiple holes and notches in one structural element or when there are holes and notches occurring in more than two consecutive structural elements, the Engineers approval is required, unless the details are shown on plans.
17. Notches or cuts in bearing or shear wall studs may be to a depth not exceeding 25% of its width. Wood studs in non-bearing and non-shear walls supporting only their weight may be notched or cut to a depth not greater than 40% (See note 16 above).
18. Bored hole diameters shall not exceed 40% of the stud width in bearing walls and 60% in non-bearing walls. The top plates may not be bored or cut, without the Engineer's approval. Neither bearing nor shear wall top plates may be bored greater than 40%, unless detailed on the plans. Holes shall not be closer than $\frac{5}{8}$" to the edge of the stud. (See note 16 above)
19. When it is necessary to cut the sole plate, sill plate or wood stud for plumbing, heating or other pipes, a $\frac{1}{16}$" thick x $1\frac{1}{2}$" wide galvanized metal stud shoe plate shall be fastened w/6-16d to the plate across the opening.
20. Equivalent metal bridging or ties may be submitted to the Engineer for approval.

(B) MINIMUM NAILING SCHEDULE

1. All structural nailing shall be common wire. Alternate fasteners may be substituted as approved by the Engineer.
2. For wood to wood joints, the spacing of nails shall not be less than the required nail penetration. Edge or end distances shall not be less than $\frac{1}{2}$ the required nail penetration. Where pre-drilling is required to avoid splitting of the wood, the hole diameter shall not exceed three-fourths of the nail diameter.
3. Nailing not noted below or on the project plans shall be a minimum of 2 nails at each contact, 8d for 1"x members and 16d for 2"x members.
4. Joists or Rafters:
   - a. Bearing (sill, girder, top plate) Toe Nail — 3-8d
   - b. Laps (parallel members over walls or beams) Face Nail — 4-16d
     For each additional 3" member depth beyond 6" member add — 2-16d
   - c. Rim joist to floor joist, End Nail — 2-16d
     For each additional 4" member depth beyond 8" member add — 1-16d
   - d. Rim joist to top plate, Toe Nail — 8d @ 6" OC
   - e. Double joists under bearing walls, staggered Face Nail. — 16d @ 1'-0" OC
5. Studs:
   - a. Double studs, Face Nail — 16d @ 2'-0" OC
   - b. Top plate to stud, End Nail — 2-16d
   - c. Stud to sole plate, Toe Nail — 3-16d or 4-8d
   - d. Sole plate to stud, End Nail — 2-16d
   - e. Stud to continous header, Toe Nail — 3-16d or 4-8d
   - f. Built-up corner studs, Face Nail — 16d @ 2'-0" OC
6. Plates:
   - a. Top plate doubled, Face Nail — 16d @ 1'-4" OC
   - b. Top plate intersection, Face Nail — 2-16d
   - c. Sole plate to rim joist or blocking, Face Nail — 16d @ 1'-4" OC
   - d. Sole plate to floor framing, Face Nail — 16d @ 1'-4" OC
7. Blocking:
   - a. To studs, joists or rafters, Toe Nail — 3-16d or 4-8d
     or End Nail — 2-16d
     For each additional 4" member depth beyond 8" member add, Toe Nail — 2-8d
     or End Nail — 1-16d
   - b. To plates, Toe Nail — 16d @ 1'-0" OC
8. 2" Subfloor to each joist or girder one blind and one Face Nail. — 2-16d
9. Structural Plywood Nailing:
   - a. Spacing at subflooring, decking, roof and wall structural plywood sheathing to framing:

LOCATION	$\frac{3}{8}$" Plwd	$\frac{7}{16}$" - 1" Plwd
At supported edges (edge nailing) & over bearing (beams, girders, walls, etc.)	8d @ 6" OC	10d @ 6" OC
At intermediate supports (field nailing)	8d @ 6" OC	10d @ 1'-0" OC
Where bearing is 4'-0" or greater (field nailing)	————	10d @ 6" OC

   - b. Structural plywood edge nailing shall be staggered at supports, Detail 2, Sheet ST-1B; at double plates. Detail 3, Sheet ST-1B; and at double studs located at wall intersections and corners, Details 9A and 9B, Sheet ST-1B.
   - c. Decking and Underlayment: (see Sheet ST-1B for nail size and spacing) — Use deformed shank nail
   - d. Panel siding to framing: (see Sheet ST-1B for nail size and spacing) — Use zinc coated nail
10. Finish Plywood Nailing (non-structural):
    - a. Finish plywood to framing where the thickness is $\frac{1}{2}$" or less:
      1) Finish nail at supported edges (edge nailing) — 6d @ 6" OC
      2) Finish nail at intermediate supports (field nailing) — 6d @ 1'-0" OC
11. Gypsum Sheathing (Structural):
    - a. Wall structural gypsum board sheathing to framing where the thickness $\frac{5}{8}$" or less:
      1) Cooler nail, parker nail or wallboard nail with a flat or concave head and diamond point at all edges and intermediate supports (field nailing) — 6d @ 4" OC

(C) MECHANICAL FASTENER NOTES

1. The clearance holes for lag screw shanks shall be the same diameter and depth as the unthreaded shank. The lead hole for the threaded portion shall be of a diameter equal to 60% of the shank diameter for screws up to $\frac{1}{2}$" diameter, and 75% of the shank diameter for larger lag screws. The lead hole shall be at least the length of the threaded portion.
2. Lag screws shall be turned into pre-drilled holes and not be driven.
3. All bolts and lag screws shall be tightened and retightened before closing in, or at completion of job.
4. All bolts and lag screws shall be provided with metal washers under heads and nuts which bear on wood.

MINIMUM WASHER FOR BOLTS & LAG SCREWS

Size	Malleable Iron Washer	Steel Plate Washer
$\frac{1}{2}$" Ø	$2\frac{1}{2}$" Ø x $\frac{5}{16}$"	2" x 2" x $\frac{1}{4}$"
$\frac{5}{8}$" Ø	$2\frac{3}{4}$" Ø x $\frac{5}{16}$"	2" x 2" x $\frac{1}{4}$"
$\frac{3}{4}$" Ø	3" Ø x $\frac{7}{16}$"	2" x 2" x $\frac{1}{4}$"
$\frac{7}{8}$" Ø	$3\frac{5}{16}$" Ø x $\frac{3}{8}$"	3" x 3" x $\frac{1}{4}$"
1" Ø	4" Ø x $\frac{1}{2}$"	3" x 3" x $\frac{1}{4}$"

Place under Bolt Heads & Nuts bearing on Wood

5. Fastener alternatives for non-bearing and non-shear walls: Two minimum per member and at 9" from ends.
   - a. $\frac{1}{8}$" Ø Powder driven anchor with 1" penetration @ 2'-0" OC.
   - b. $\frac{1}{4}$" Ø expansion anchorage device embedded $1\frac{1}{2}$" minimum at 2'-0" OC.
   - c. $\frac{1}{2}$" Ø anchor bolt with $2\frac{1}{2}$" embedment @ 4'-0" OC.
6. Equivalent mechanical fasteners may be submitted to the Engineer for approval.

NOTE: SPECIFIC DETAILS OR NOTES ON OTHER SHEETS SHALL PREVAIL OVER STANDARD DETAILS AND NOTES ON THIS SHEET

DIST.	COUNTY	ROUTE	POST MILES TOTAL PROJECT	SHEET NO.	TOTAL SHEETS
03	Nev	5717		56	106

Joseph Camilleri 10-30-08
REGISTERED CIVIL ENGINEER

REGISTERED PROFESSIONAL ENGINEER Joseph F. Camilleri No. 3656 Exp. 3-31-10 STRUCTURAL STATE OF CALIFORNIA

1-26-09
PLANS APPROVAL DATE

The State of California or its officers or agents shall not be responsible for the accuracy or completeness of electronic copies of this plan sheet.

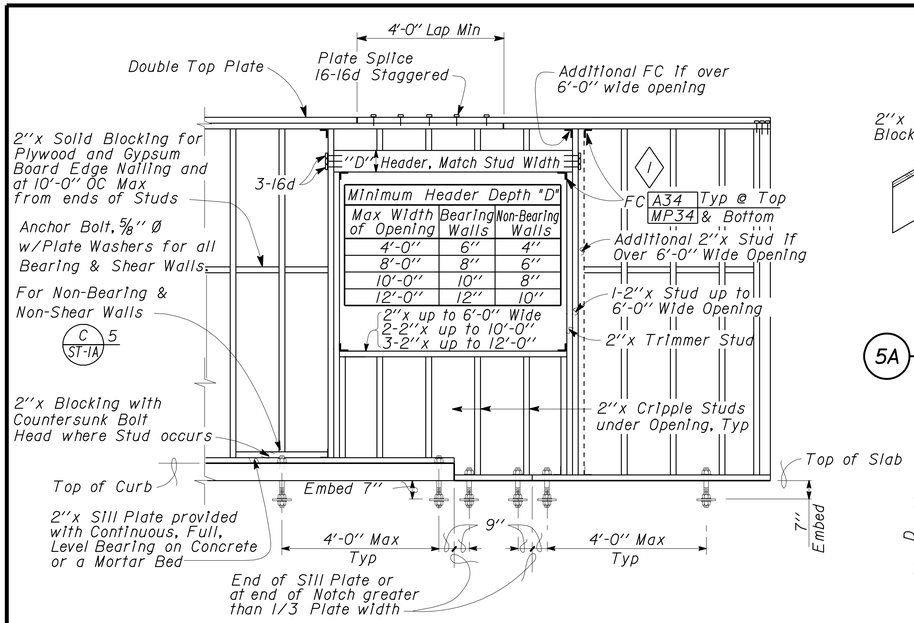

1 TYPICAL WALL AND OPENING FRAMING
No Scale

Notch Rafter If Slope Exceeds 1:15

Plate Size	"X"
2"x 4"	2"
2" x 6"	3"
2" x 8"	4"

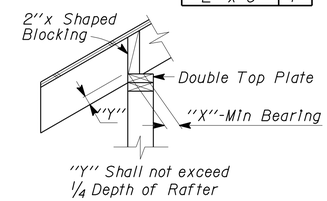

5A RAFTER BEARING

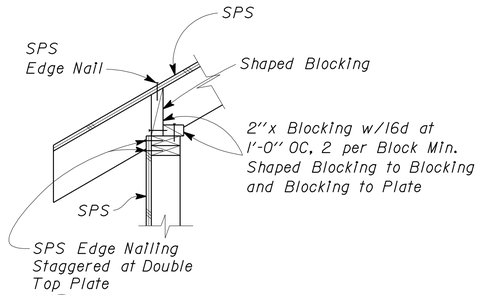

5B SHEAR TRANSFER

5 EXTERIOR WALL TOP PLATE DETAIL
No Scale

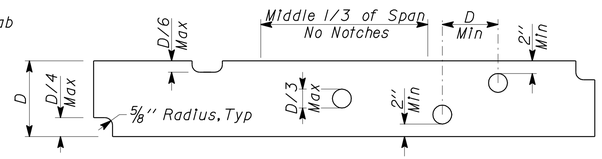

6 NOTCH LIMITS FOR JOISTS AND HEADERS
No Scale

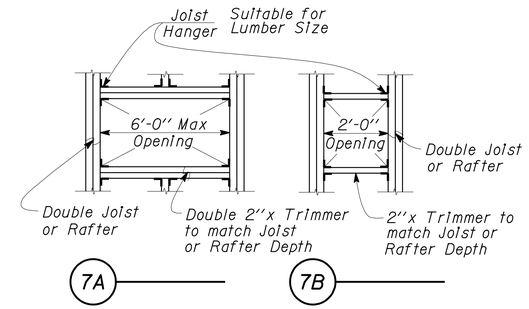

7A 7B

7 FRAMING AT OPENINGS
No Scale

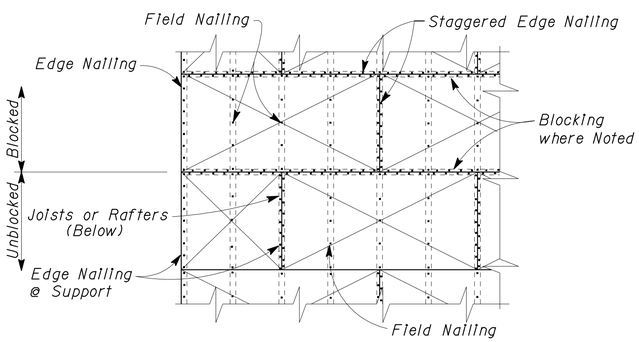

2 STRUCTURAL PLYWOOD LAYOUT
No Scale

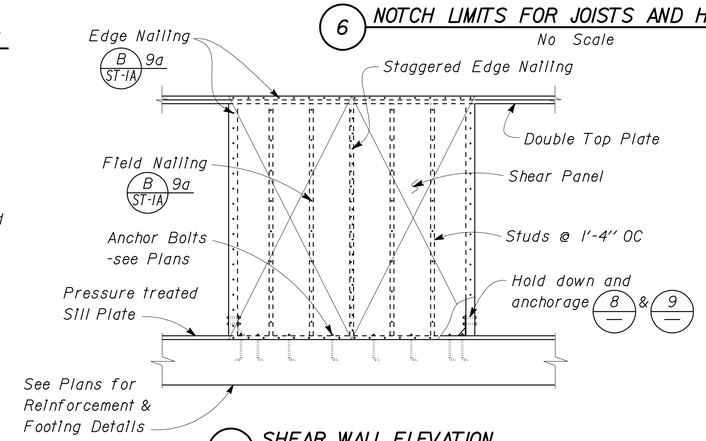

3 SHEAR WALL ELEVATION
No Scale

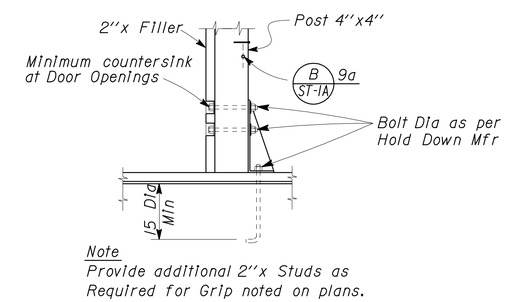

Note
Provide additional 2"x Studs as Required for Grip noted on plans.

8 INTERIOR HOLD DOWN
No Scale

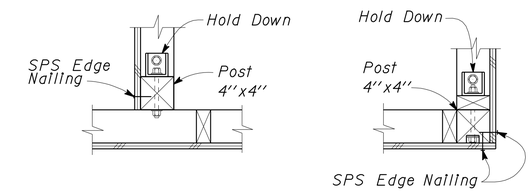

9A INTERSECTION 9B CORNER

Note
Interior Sheathing and attachment not shown for clarity.

9 INTERIOR AND CORNER WALL FRAMING DETAILS
No Scale

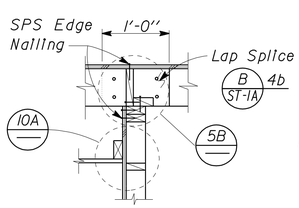

4A LAP SPLICE ACROSS JOISTS

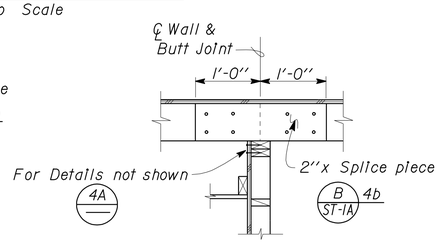

4B BUTT SPLICE ACROSS JOISTS

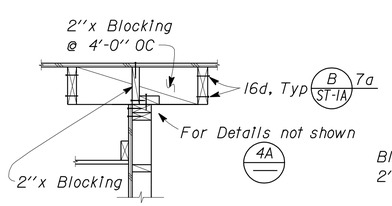

4C JOISTS PARALLEL TO WALL

4 JOIST LAYOUT AT TOP OF BEARING AND SHEAR WALL
No Scale

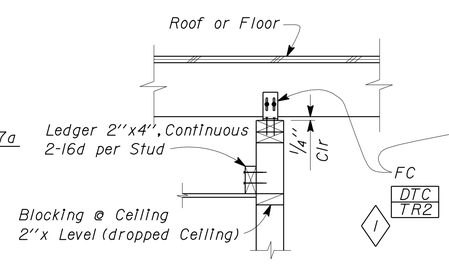

10A ACROSS JOISTS

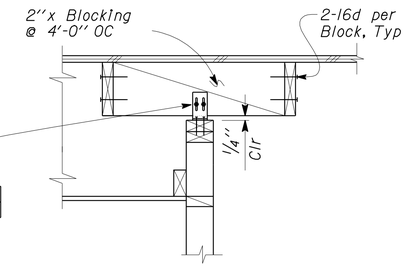

10B PARALLEL TO JOISTS

10 NON-BEARING WALL TOP PLATE CONNECTION
No Scale

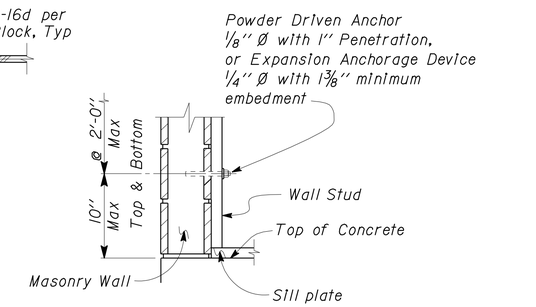

11 STUD ANCHORAGE TO MASONRY
No Scale

NOTE: SPECIFIC DETAILS OR NOTES ON OTHER SHEETS SHALL PREVAIL OVER STANDARD DETAILS AND NOTES ON THIS SHEET

STANDARD DRAWING

FILE NO. XS-25-5.1	DESIGN BY Sean Sewell	CHECKED Joe Carrillo	APPROVED R E Travis
DRAWING DATE 1-04	DETAILS BY Peter Fivon Sawyer, III	CHECKED Joe Carrillo	DESIGN SUPERVISOR
	SUBMITTED BY Sean Sewell, DESIGN ENGINEER		

1 Revision - 11-02-2006
Updated USP connector ID.

STATE OF CALIFORNIA DEPARTMENT OF TRANSPORTATION

DIVISION OF ENGINEERING SERVICES ARCHITECTURAL AND STRUCTURAL DESIGN

BRIDGE NO. 17M5717
POST MILE 15.9

NEVADA CITY MAINTENANCE STATION RESIDENT MECHANIC'S FACILITY
WOOD FRAMING STANDARD - DETAILS

SHEET ST-1B

DOES SD Imperial Rev. 9/02

SCALE: ALL DIMENSIONS ARE IN MILLIMETERS UNLESS OTHERWISE NOTED.

ORIGINAL SCALE IN INCHES FOR REDUCED PLANS 0 1 2 3

CU 03225
EA 318001

DISREGARD PRINTS BEARING EARLIER REVISION DATES → REVISION DATES (PRELIMINARY STAGE ONLY) 10-16-03 11-14-05 11-14-07 SHEET OF

20-JAN-2010 14:02

st_01b.dgn

DIST.	COUNTY	ROUTE	POST MILES TOTAL PROJECT	SHEET NO.	TOTAL SHEETS
03	Nev	5717		57	106

Joseph Camilleri 10-30-08
REGISTERED CIVIL ENGINEER

REGISTERED PROFESSIONAL ENGINEER Joseph F. Camilleri No. 3656 Exp. 3-31-10 STRUCTURAL STATE OF CALIFORNIA

1-26-09
PLANS APPROVAL DATE

The State of California or its officers or agents shall not be responsible for the accuracy or completeness of electronic copies of this plan sheet.

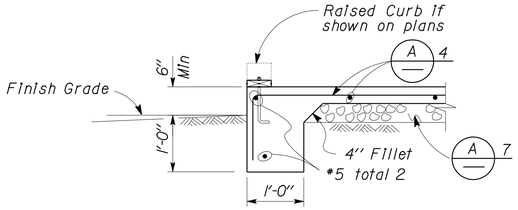

1 EXTERIOR FOOTING
No Scale

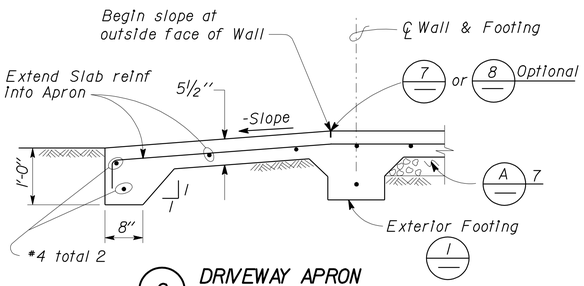

2 DRIVEWAY APRON
No Scale

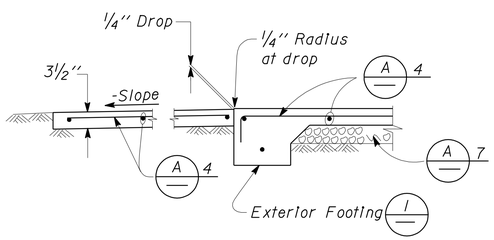

3 WALKWAY APRON
No Scale

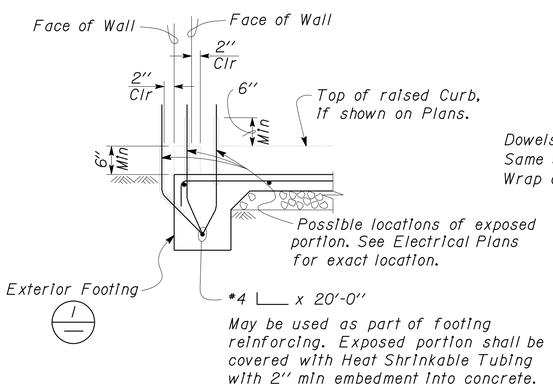

4 GROUND BAR DETAIL
No Scale

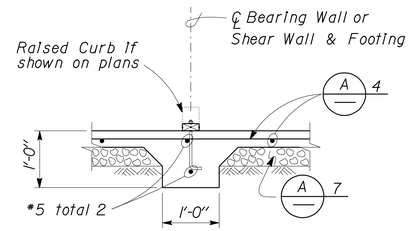

5 INTERIOR FOOTING
No Scale

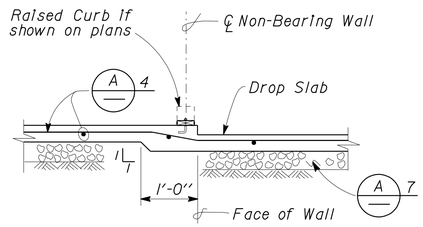

6 DROP SLAB AT NON-BEARING WALL
No Scale

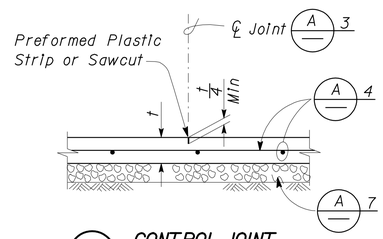

7 CONTROL JOINT
No Scale

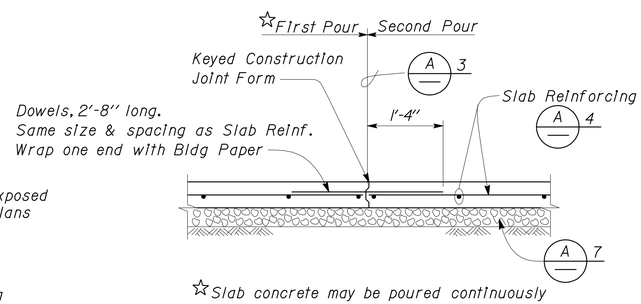

☆Slab concrete may be poured continuously across the Control Joint, to cover as large an area as practical.

8 CONTRACTION JOINT
No Scale

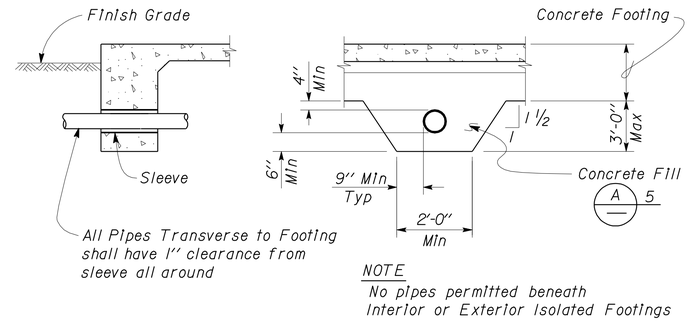

NOTE
No pipes permitted beneath Interior or Exterior Isolated Footings

9 PIPE DETAILS THROUGH FOOTING
No Scale

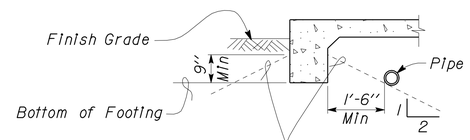

NOTE
For Pipe Cover, see Specifications: Earthwork for Building Work

No digging for Pipe Trench parallel to Footing below these lines.

Exterior Footing shown, Interior or Exterior Isolated Footings are similar.

10 PIPE DETAILS PARALLEL TO FOOTING
No Scale

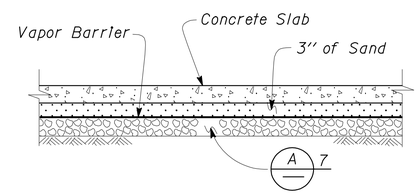

11 MOISTURE BARRIER
No Scale

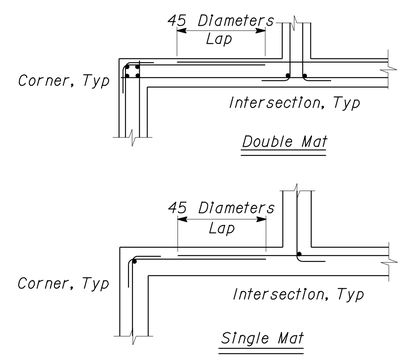

12 CORNER/INTERSECTION REINF SPLICE, TYPICAL
No Scale

A CONCRETE NOTES

1. The following minimum concrete cover shall be provided for reinforcement.

	Minimum Cover
a. Concrete cast against and permanently exposed to earth	3"
b. Concrete exposed to earth or weather but cast in forms :	
*6 thru *18 bars	2"
*5 bar and smaller, W31 or D31 Wire, and smaller	1½"
c. Concrete not exposed to weather or in contact with ground : Slabs, Walls and Joists :	
*14 and *18 Bar	1½"
*11 Bar and smaller	¾"
Beams and Columns : Primary Reinforcement, Ties, Stirrups and Spirals	1½"

2. Splices in continuous reinforcement as in Walls, Wall Footings, etc. *8 or smaller shall have a lap of 45 diameters and the splices in adjacent bars shall not be less than 5'-0" apart.

   Continuous Bars in spandrels, Wall Beams, etc. shall lap Top Bars at center of span and Bottom Bars at supports.

3. Contraction Joints and Control Joints shall divide slab into areas not exceeding 25 square yards without reentrant corners and with length to width ratios not exceeding 1.5 to 1. Joint spacing shall not exceed 15'-0".

4.

Slab Thickness (t)	Reinforcement	
3½"	*3 @ 18	Each way, place in center of Slab
5½"	*4 @ 18	Each way, place in center of Slab

5. Concrete fill is to be placed before Footing is poured. Make the same width as the Footing and the full width of the Pipe trench. Concrete fill not required for pipes less than 2" diameter for pipes more than 3'-0" below bottom of footing.

6. See Mechanical and Architectural Plans for size and locations of pipe, vents, ducts and other similar openings. See Electrical Plans for conduits and outlet boxes in floors, walls, etc.

7. Place 4" of free draining granular material under slabs.

NOTE: SPECIFIC DETAILS OR NOTES ON OTHER SHEETS SHALL PREVAIL OVER STANDARD DETAILS AND NOTES ON THIS SHEET

STANDARD DRAWING

FILE NO. XS-25-1	DESIGN	BY Jean Samuel	CHECKED Lee Cofrancesco	APPROVED R.E. Travis
DRAWING DATE 1-04	DETAILS	BY Peter F. von Sauvigy, II	CHECKED Lee Cofrancesco	DESIGN SUPERVISOR
	SUBMITTED BY Jean Samuel	, DESIGN ENGINEER		

DOES SD Imperial Rev. 9/02

SCALE: ALL DIMENSIONS ARE IN MILLIMETERS UNLESS OTHERWISE NOTED.

ORIGINAL SCALE IN INCHES FOR REDUCED PLANS 0 1 2 3

STATE OF CALIFORNIA DEPARTMENT OF TRANSPORTATION

DIVISION OF ENGINEERING SERVICES ARCHITECTURAL AND STRUCTURAL DESIGN

CU 03225
EA 318001

BRIDGE NO. 17M5717
POST MILE 15.9

NEVADA CITY MAINTENANCE STATION
RESIDENT MECHANIC'S FACILITY
CONCRETE STANDARD

SHEET ST-2

DISREGARD PRINTS BEARING EARLIER REVISION DATES → 11-14-07

REVISION DATES (PRELIMINARY STAGE ONLY) SHEET OF

20-JAN-2010 14:02

st_02.dgn

DIST.	COUNTY	ROUTE	POST MILES TOTAL PROJECT	SHEET NO.	TOTAL SHEETS
03	Nev	5717		58	106

REGISTERED CIVIL ENGINEER — Joseph Camilleri 10-30-08

REGISTERED PROFESSIONAL ENGINEER — Joseph F. Camilleri — No. 3656 — Exp. 3-31-10 — STRUCTURAL — STATE OF CALIFORNIA

1-26-09
PLANS APPROVAL DATE

The State of California or its officers or agents shall not be responsible for the accuracy or completeness of electronic copies of this plan sheet.

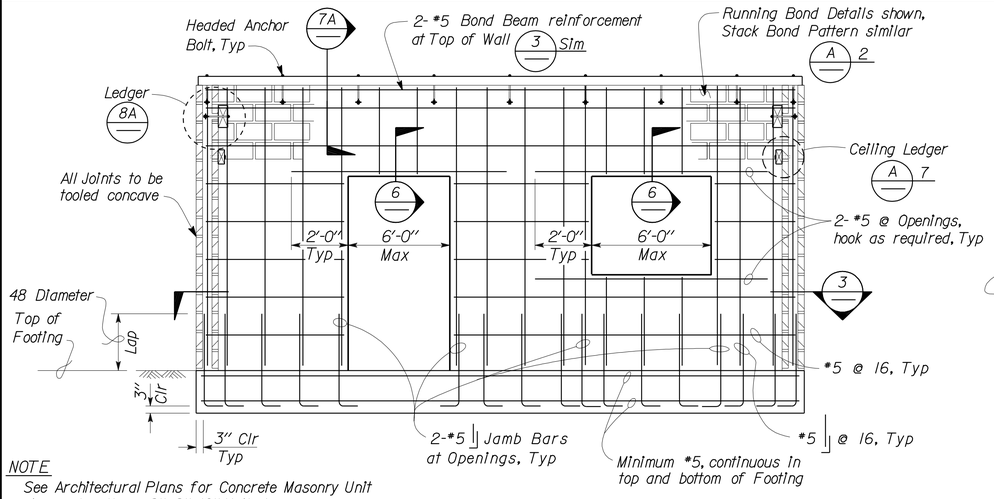

NOTE
See Architectural Plans for Concrete Masonry Unit size and pattern, 8"x8"x16" Unit shown.

1 WALL ELEVATION
No Scale

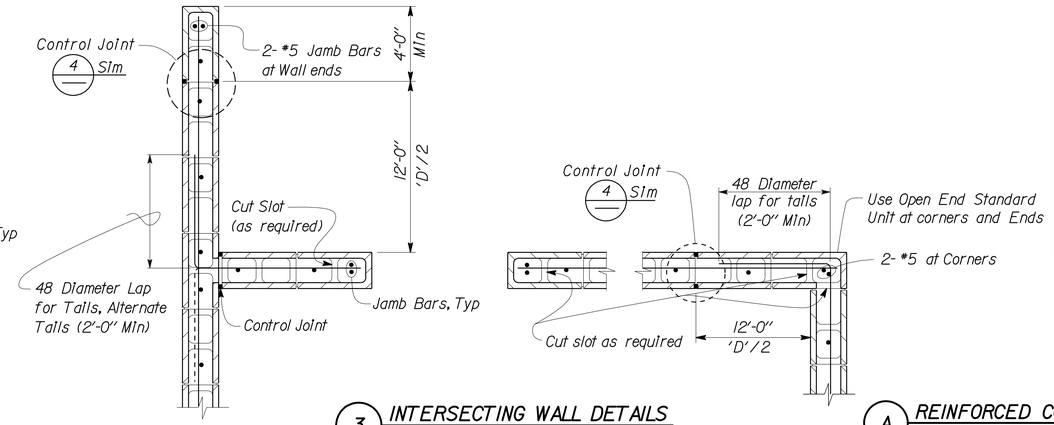

3 INTERSECTING WALL DETAILS
No Scale

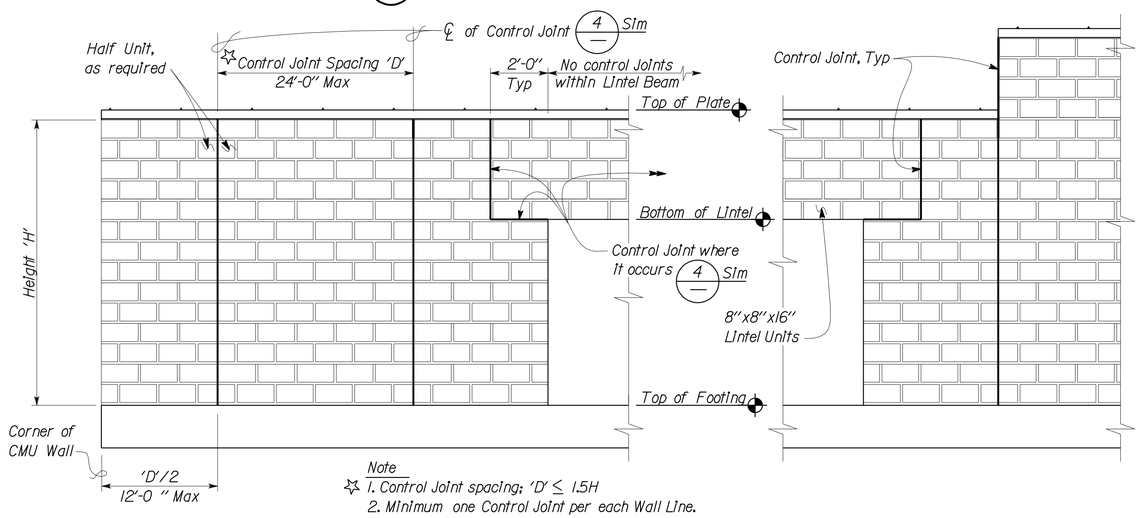

Note
1. Control Joint spacing; 'D' ≤ 1.5H
2. Minimum one Control Joint per each Wall Line.
3. Location of the Control Joints to be approved by the Engineer.

2 WALL ELEVATION
No Scale

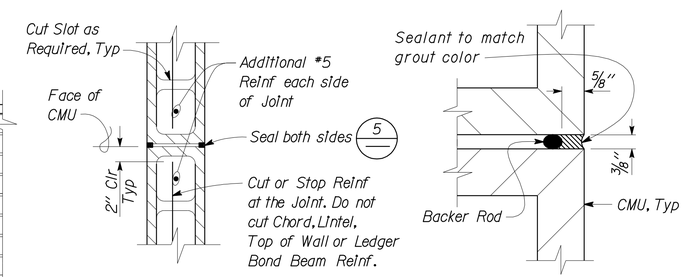

4 CONTROL JOINT DETAIL
No Scale

5 JOINT SEAL DETAIL
No Scale

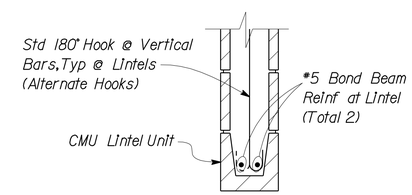

6 LINTEL DETAIL
No Scale

A REINFORCED CONCRETE MASONRY UNIT NOTES

1. All Walls shown on plans shall be solid grout, open end units, UON.
2. Stack Bond requires open end Bond Beam Units throughout.
3. All vertical reinforcement shall be centered in cell, UON. The minimum coverage of other reinforcement from the exposed surface of Concrete Masonry Unit shall be 2".
4. Reinforcement splices shall be as follows:
   a. Length of lap splice for a #7 or smaller bar shall be 48 diameters.
   b. Lintel lap splices, if necessary, shall be at midspan for top bars and beyond support for bottom bars.
5. There shall be a minimum 8" return at any Jamb adjacent to corner.
6. Dowels shall be at least the same size and spacing as wall reinforcement.
7. Ceiling Ledger shall be anchored with 1/4" Ø Expansion Anchors installed at 2'-8" OC maximum spacing. Expansion Anchors shall have 1 1/2" minimum distance to any edge of the masonry unit. Minimum embedment measured from the outside face of the unit shall be 2".
8. Pipes shall not be embedded in any Masonry Wall except when shown on plans or as approved by the Engineer.
9. Electrical Conduit, Panels or Fixtures may be placed in cells with the following restrictions:
   a. The Conduits shall not interfere with or displace the reinforcing steel.
   b. Conduits shall not be placed in such a congested manner as to prevent the complete filling of the cells with grout.
   c. Horizontal run of 3/4" maximum size conduit may be placed in a bond beam unit course that does not have horizontal reinforcing steel.
   d. Recesses more than 1" deep for Electrical Panels or Fixtures shall be framed and have similar reinforcement as doors and windows.
10. Steel washers shall be provided for all anchor bolts, over-sized holes and high strength bolts.
11. See Architectural and Mechanical Plans for offsets, sizes and locations of ducts, wall openings, vents and other details not shown on Structural sheets.

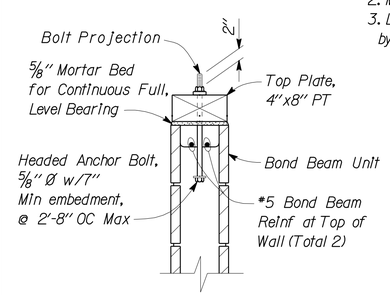

7A WOOD TOP PLATE DETAIL
No Scale

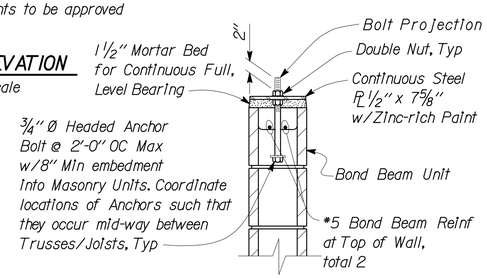

7B STEEL TOP PLATE DETAIL
No Scale

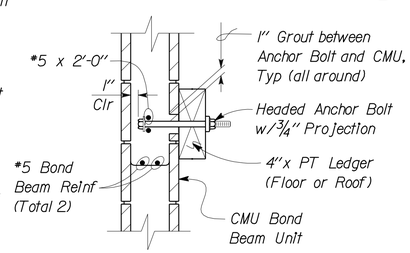

8A WOOD LEDGER DETAIL
No Scale

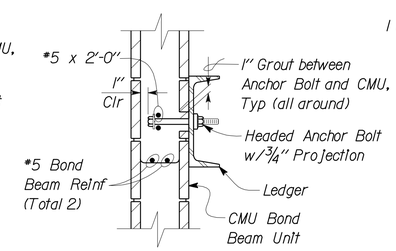

8B STEEL LEDGER DETAIL
No Scale

8" CMU

NOTE: SPECIFIC DETAILS OR NOTES ON OTHER SHEETS SHALL PREVAIL OVER STANDARD DETAILS AND NOTES ON THIS SHEET

STANDARD DRAWING

FILE NO. XS-25-2	DESIGN BY Sean Samuel	CHECKED Joe Gaston	APPROVED R.E. Travis
DRAWING DATE 1-04	DETAILS BY Peter Lyon Sawyer, II	CHECKED Sean Samuel	DESIGN SUPERVISOR
	SUBMITTED BY Sean Samuel, DESIGN ENGINEER		

STATE OF CALIFORNIA DEPARTMENT OF TRANSPORTATION

DIVISION OF ENGINEERING SERVICES ARCHITECTURAL AND STRUCTURAL DESIGN

BRIDGE NO. 17M5717
POST MILE 15.9

NEVADA CITY MAINTENANCE STATION RESIDENT MECHANIC'S FACILITY
CONCRETE MASONRY UNIT STANDARD

SHEET ST-3

DOES SD Imperial Rev. 9/02

SCALE: ALL DIMENSIONS ARE IN MILLIMETERS UNLESS OTHERWISE NOTED.

ORIGINAL SCALE IN INCHES FOR REDUCED PLANS 0 1 2 3

CU 03225
EA 318001

DISREGARD PRINTS BEARING EARLIER REVISION DATES →

REVISION DATES (PRELIMINARY STAGE ONLY) SHEET OF

20-JAN-2010 14:03

st_03.dgn

DIST.	COUNTY	ROUTE	POST MILES TOTAL PROJECT	SHEET NO.	TOTAL SHEETS
03	Nev	5717		59	110

Joseph Camilleri 10-30-08
REGISTERED CIVIL ENGINEER DATE

REGISTERED PROFESSIONAL ENGINEER Joseph F. Camilleri No. 3656 Exp. 3-31-10 STRUCTURAL STATE OF CALIFORNIA

1-26-09
PLANS APPROVAL DATE

The State of California or its officers or agents shall not be responsible for the accuracy or completeness of electronic copies of this plan sheet.

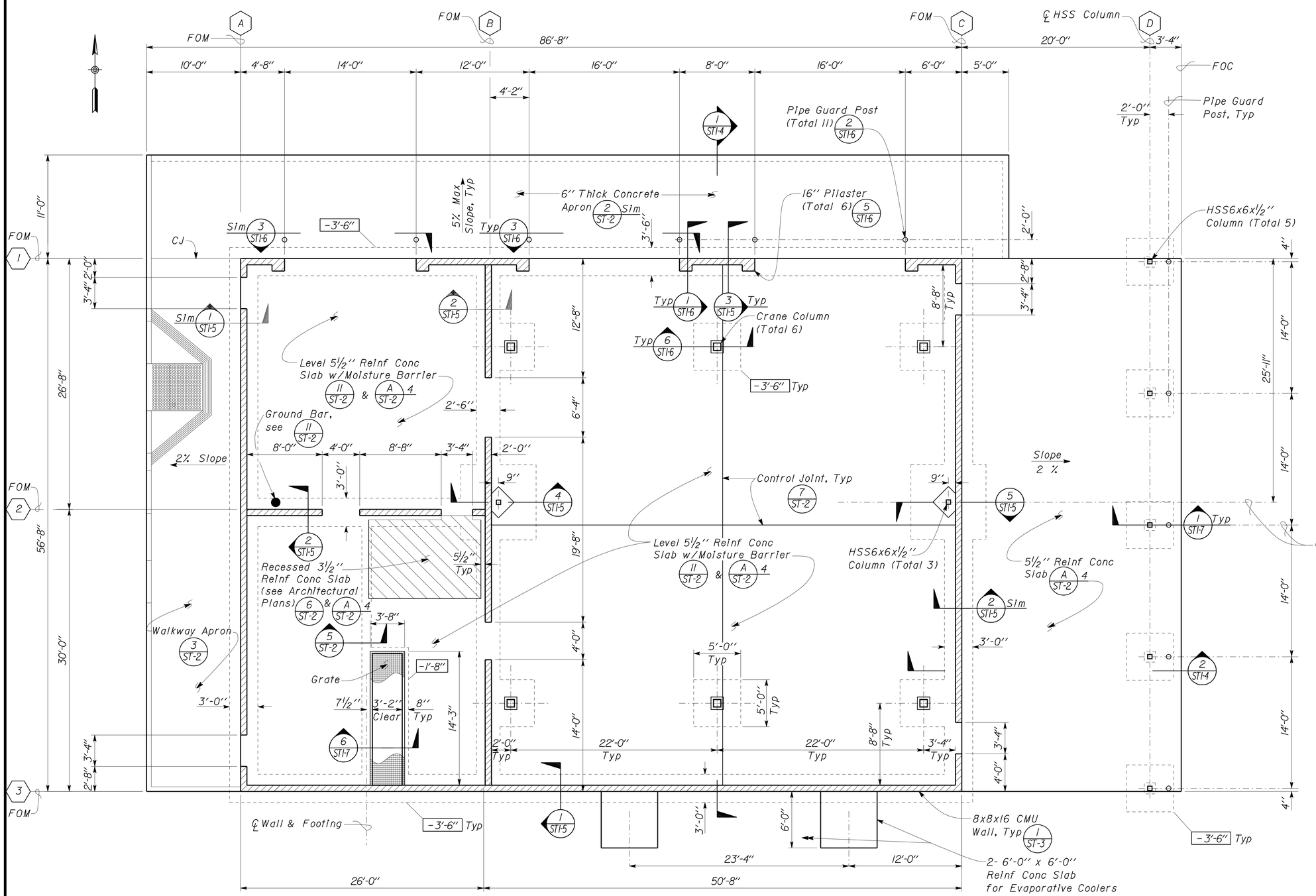

NOTES:

1. See Architectural Sheets for Slab Slopes, Recesses and Curb Layout
2. All columns are HSS 6x6x1/2.
3. Electrical Ground Bar, see (4/ST-2) & Electrical Plans for Location.

(1) FOUNDATION PLAN
Scale 3/16" = 1'-0"

Elevation 2685.36 = Datum 0'-0"

	BY	CHECKED
DESIGN	Joseph Camilleri	Justin Uyehara
DETAILS	P. von Savoye	Justin Uyehara
QUANTITIES		

STATE OF CALIFORNIA DEPARTMENT OF TRANSPORTATION

DIVISION OF ENGINEERING SERVICES ARCHITECTURAL AND STRUCTURAL DESIGN

BRIDGE NO. 17M5717
POST MILE 15.9

NEVADA CITY MAINTENANCE STATION RESIDENT MECHANIC'S FACILITY

FOUNDATION PLAN

SHEET ST1-1

DOES SD Imperial Rev. 9/02

ORIGINAL SCALE IN INCHES FOR REDUCED PLANS 0 1 2 3

CU 03225
EA 318001

DISREGARD PRINTS BEARING EARLIER REVISION DATES → 09-30-08

REVISION DATES (PRELIMINARY STAGE ONLY) SHEET OF

20-JAN-2010 14:03

st1_01.dgn

DIST.	COUNTY	ROUTE	POST MILES TOTAL PROJECT	SHEET NO.	TOTAL SHEETS
03	Nev	5717		60	106

Joseph Camilleri 10-30-08
REGISTERED CIVIL ENGINEER DATE

REGISTERED PROFESSIONAL ENGINEER
Joseph F. Camilleri
No. 3656
Exp. 3-31-10
STRUCTURAL
STATE OF CALIFORNIA

1-26-09
PLANS APPROVAL DATE

The State of California or its officers or agents shall not be responsible for the accuracy or completeness of electronic copies of this plan sheet.

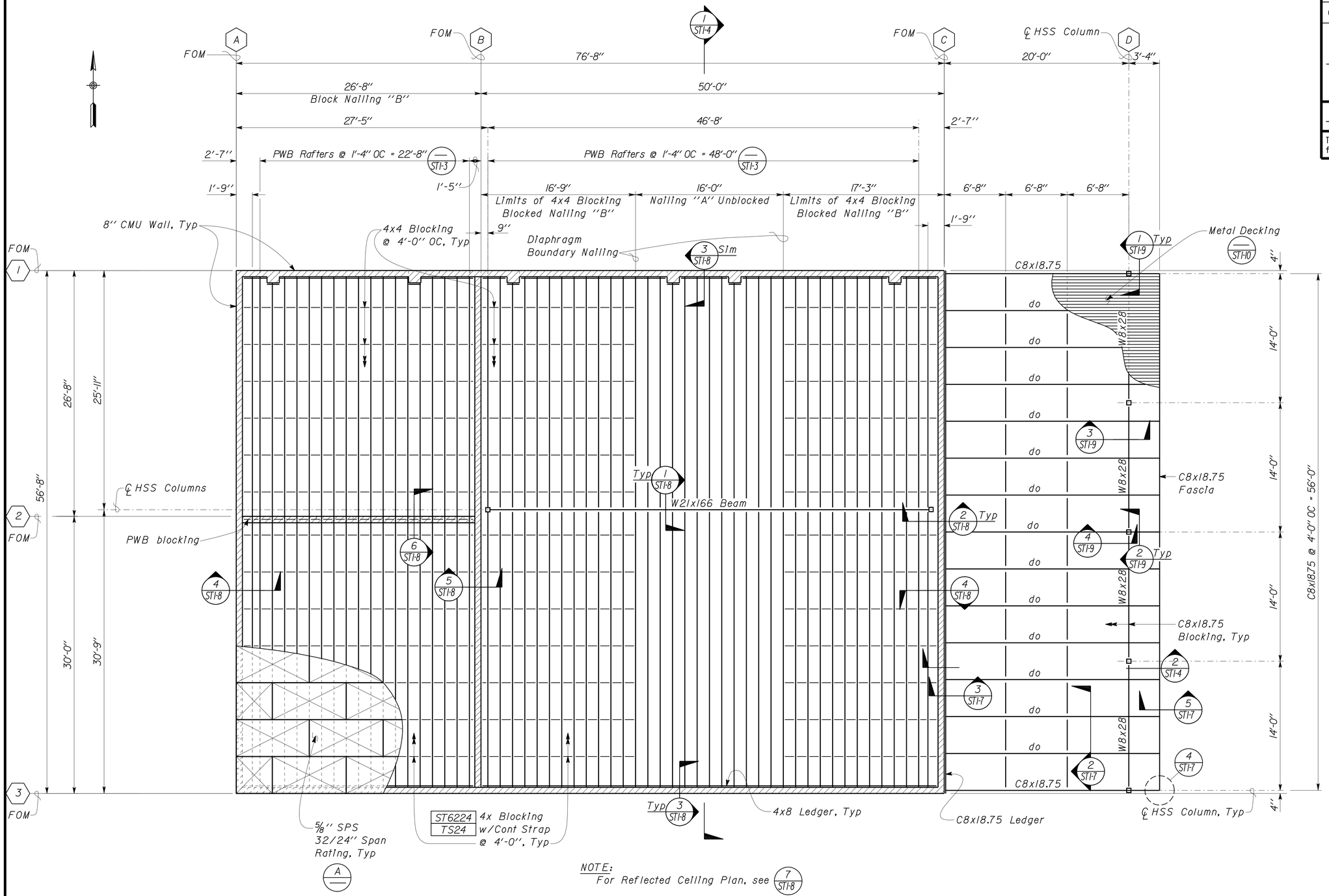

NOTE:
For Reflected Ceiling Plan, see 7 ST1-8

1 ROOF FRAMING PLAN
Scale 3/16" = 1'-0"

A ROOF NAILING SCHEDULE

Nailing "A" Schedule:
- 10d @ 6" OC @ Diaphragm Boundary
- 10d @ 6" OC @ other SPS Panel Edges
- 10d @ 12" OC Field Nailing

Nailing "B" Schedule:
- 10d @ 3" OC @ Diaphragm Boundary
- 10d @ 3" OC @ other SPS Panel Edges
- 10d @ 12" OC Field Nailing

	BY	CHECKED
DESIGN	Joseph Camilleri	Justin Uyehara
DETAILS	P. von Savoye	Justin Uyehara
QUANTITIES		

STATE OF CALIFORNIA
DEPARTMENT OF TRANSPORTATION

DIVISION OF ENGINEERING SERVICES
ARCHITECTURAL AND STRUCTURAL DESIGN

BRIDGE NO. 17M5717
POST MILE 15.9

NEVADA CITY MAINTENANCE STATION
RESIDENT MECHANIC'S FACILITY

ROOF FRAMING PLAN

SHEET **ST1-2**

DOES SD Imperial Rev. 9/02

ORIGINAL SCALE IN INCHES FOR REDUCED PLANS 0 1 2 3

CU 03225
EA 318001

DISREGARD PRINTS BEARING EARLIER REVISION DATES → 11-19-07

REVISION DATES (PRELIMINARY STAGE ONLY) SHEET OF

20-JAN-2010 14:03

st1_02.dgn

DIST.	COUNTY	ROUTE	POST MILES TOTAL PROJECT	SHEET NO.	TOTAL SHEETS
03	Nev	5717		61	106

Joseph Camilleri 10-30-08
REGISTERED CIVIL ENGINEER DATE

REGISTERED PROFESSIONAL ENGINEER
Joseph F. Camilleri
No. 3656
Exp. 3-31-10
STRUCTURAL
STATE OF CALIFORNIA

1-26-09
PLANS APPROVAL DATE

The State of California or its officers or agents shall not be responsible for the accuracy or completeness of electronic copies of this plan sheet.

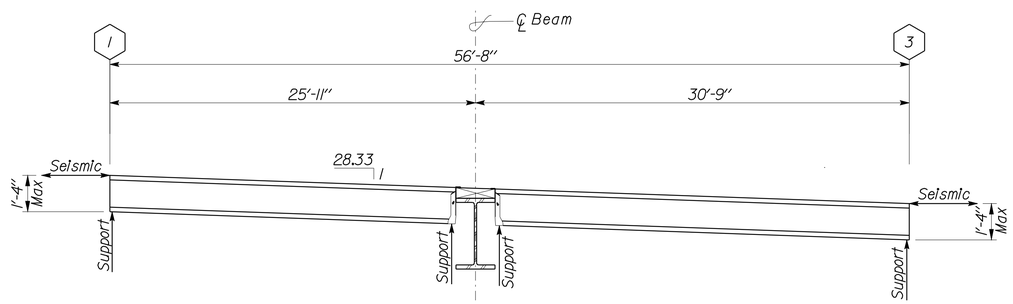

1 PREFABRICATED WOOD I BEAM RAFTER
No Scale

A PREFABRICATED WOOD PWB RAFTER REQUIREMENTS

LOADS:

	Dead Load	Live Load	Snow Load
Top Chord (Roof):	15 psf	20 psf	32 psf
Bottom Chord (Ceiling)	5 psf	10 psf	

Seismic = 2.0 kips per rafter, see A/ST-0 for additional Seismic Chord Force

1. Deflection:
   Live Load ---------- L/360
   Total Load ---------- L/240
2. Camber Shall be 1.5 Times Dead Load Deflection
3. Web material shall be 3/8" Structural Plywood, minimum.
4. Chord width shall be 3 1/2" minimum and depth shall be 2 1/2" minimum.
5. ←——→ Indicates Seismic Lateral Load.
6. ↑ Denotes Point of Support

DESIGN	BY Joseph Camilleri	CHECKED Justin Uyehara	
DETAILS	BY P. von Savoye	CHECKED Justin Uyehara	
QUANTITIES	BY	CHECKED	

STATE OF CALIFORNIA
DEPARTMENT OF TRANSPORTATION

DIVISION OF ENGINEERING SERVICES
ARCHITECTURAL AND STRUCTURAL DESIGN

BRIDGE NO. 17M5717
POST MILE 15.9

NEVADA CITY MAINTENANCE STATION
RESIDENT MECHANIC'S FACILITY
PREFABRICATED WOOD I BEAM RAFTER

SHEET ST1-3

DOES SD Imperial Rev. 9/02

ORIGINAL SCALE IN INCHES FOR REDUCED PLANS 0 1 2 3

CU 03225
EA 318001

DISREGARD PRINTS BEARING EARLIER REVISION DATES → 11-19-07

REVISION DATES (PRELIMINARY STAGE ONLY) SHEET OF

20-JAN-2010 14:04
st1_03.dgn

DIST.	COUNTY	ROUTE	POST MILES TOTAL PROJECT	SHEET NO.	TOTAL SHEETS
03	Nev	5717		62	106

Joseph Camilleri 10-30-08
REGISTERED CIVIL ENGINEER DATE

REGISTERED PROFESSIONAL ENGINEER
Joseph F. Camilleri
No. 3656
Exp. 3-31-10
STRUCTURAL
STATE OF CALIFORNIA

1-26-09
PLANS APPROVAL DATE

The State of California or its officers or agents shall not be responsible for the accuracy or completeness of electronic copies of this plan sheet.

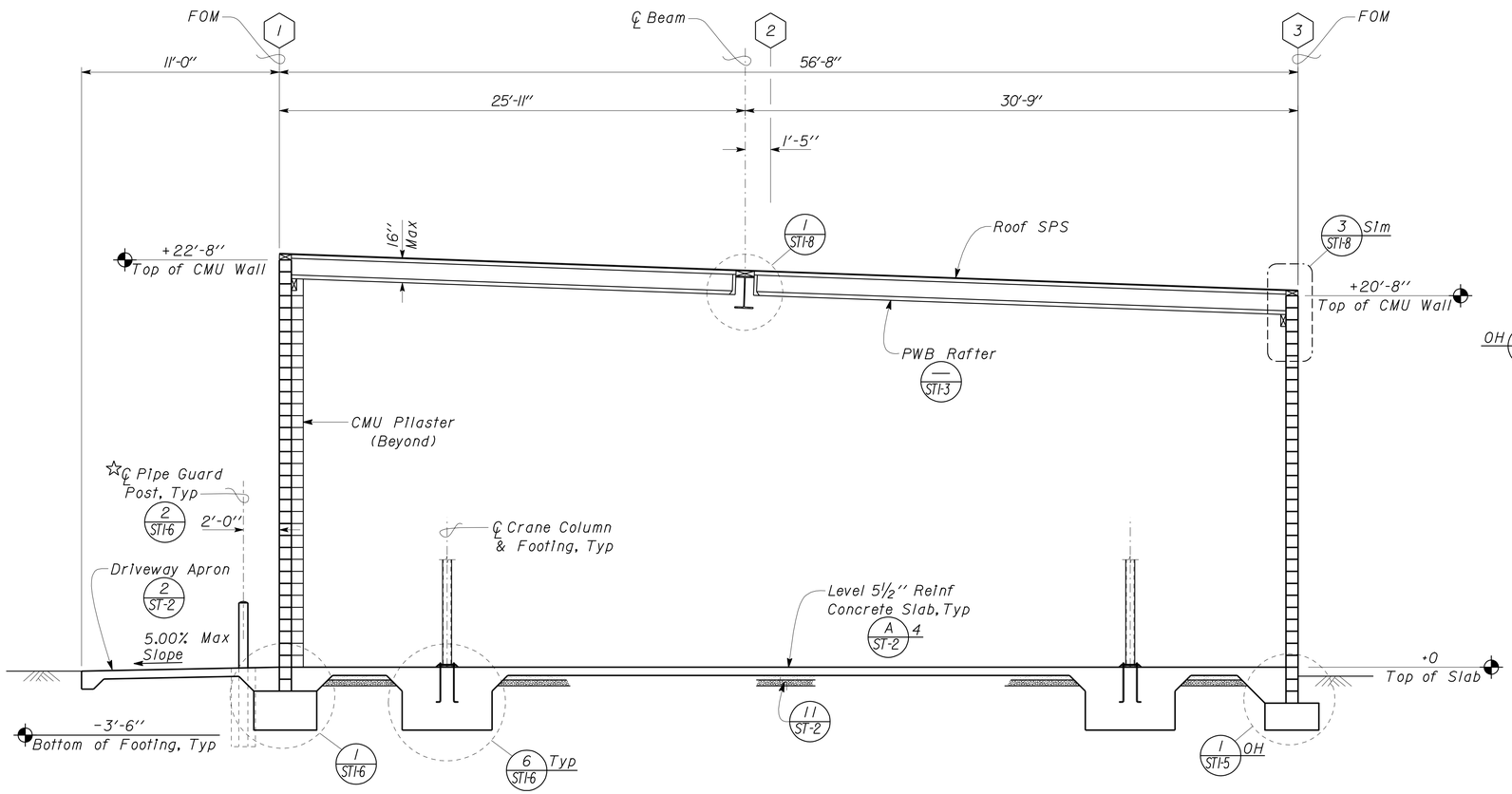

NOTE:
Crane Assembly not shown, see Architectural Plans.
☆ Provide blockout through concrete footing as required.

1 TYPICAL SECTION
Scale 1/4" = 1'-0"

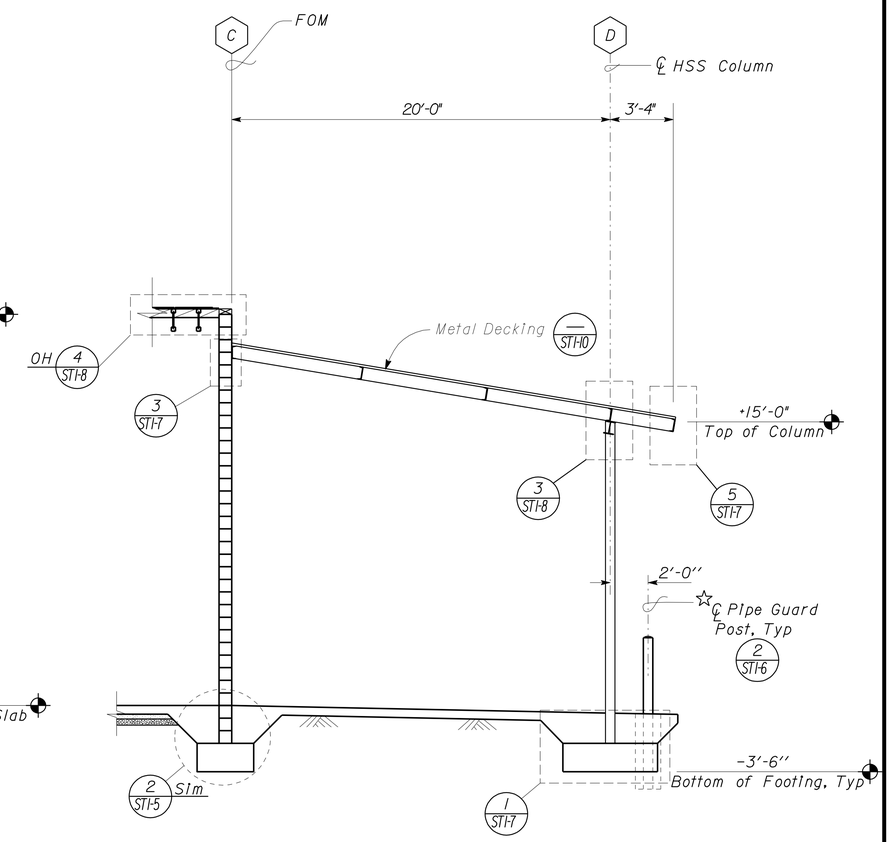

2 CANOPY SECTION
Scale 1/4" = 1'-0"

DESIGN	BY Joseph Camilleri	CHECKED Justin Uyehara	
DETAILS	BY P. von Savoye	CHECKED Justin Uyehara	
QUANTITIES	BY	CHECKED	

STATE OF CALIFORNIA
DEPARTMENT OF TRANSPORTATION

DIVISION OF ENGINEERING SERVICES
ARCHITECTURAL AND STRUCTURAL DESIGN

BRIDGE NO. 17M5717
POST MILE 15.9

NEVADA CITY MAINTENANCE STATION
RESIDENT MECHANIC'S FACILITY
TYPICAL SECTIONS

SHEET ST1-4

DOES SD Imperial Rev. 9/02

ORIGINAL SCALE IN INCHES FOR REDUCED PLANS 0 1 2 3

CU 03225
EA 318001

DISREGARD PRINTS BEARING EARLIER REVISION DATES → 09-30-08

REVISION DATES (PRELIMINARY STAGE ONLY) SHEET OF

20-JAN-2010 14:04

st1_04.dgn

DIST.	COUNTY	ROUTE	POST MILES TOTAL PROJECT	SHEET NO.	TOTAL SHEETS
03	Nev	5717		63	106

Joseph Camilleri 10-30-08
REGISTERED CIVIL ENGINEER DATE

REGISTERED PROFESSIONAL ENGINEER
Joseph F. Camilleri
No. 3656
Exp. 3-31-10
STRUCTURAL
STATE OF CALIFORNIA

1-26-09
PLANS APPROVAL DATE

The State of California or its officers or agents shall not be responsible for the accuracy or completeness of electronic copies of this plan sheet.

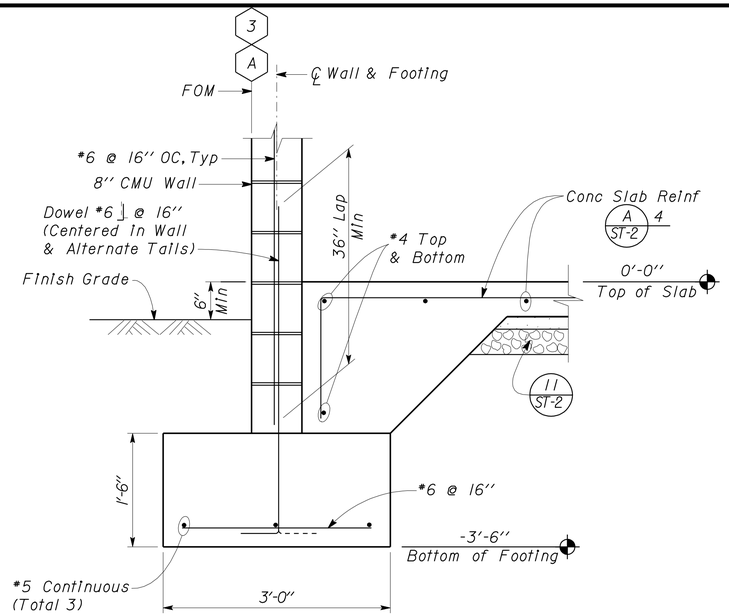

1 CMU EXTERIOR FOOTING
Scale 1" = 1'-0"

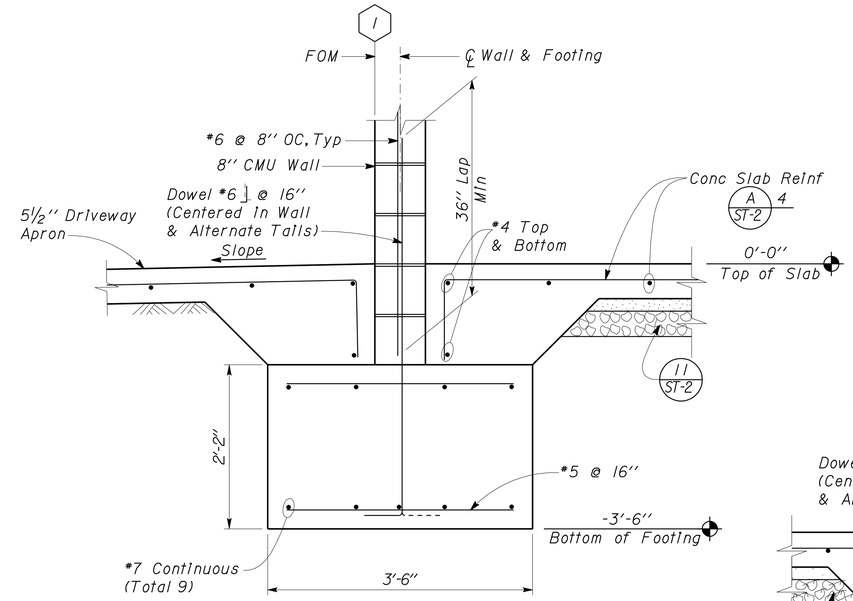

3 CMU EXTERIOR FOOTING
Scale 1" = 1'-0"

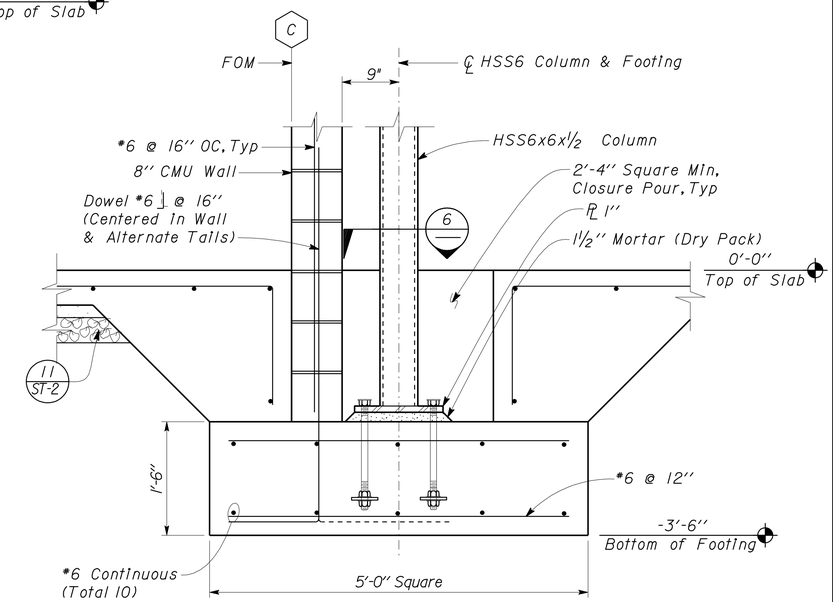

5 CMU EXTERIOR FOOTING
Scale 1" = 1'-0"

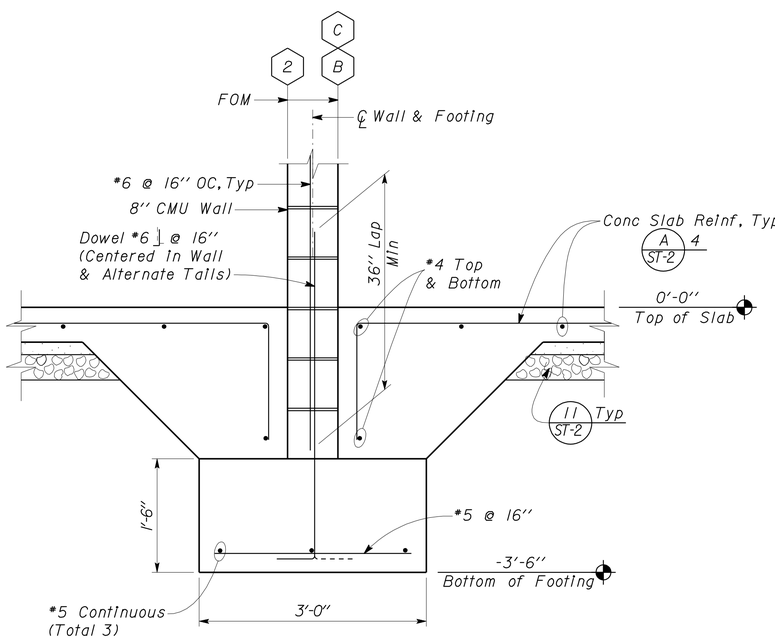

2 CMU INTERIOR FOOTING
Scale 1" = 1'-0"

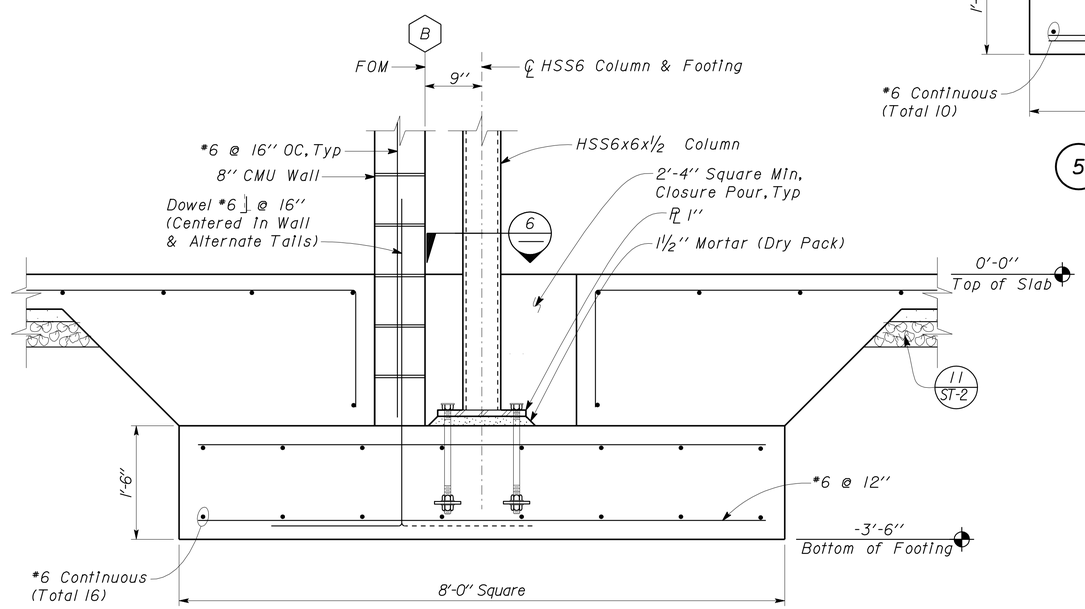

4 CMU EXTERIOR FOOTING
Scale 1" = 1'-0"

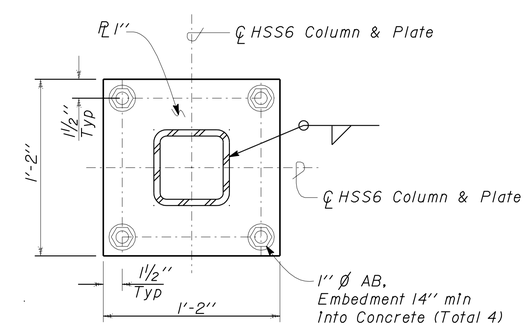

6 COLUMN BASE PLATE LAYOUT
Scale 2" = 1'-0"

	BY	CHECKED
DESIGN	Joseph Camilleri	Justin Uyehara
DETAILS	P. von Savoye	Justin Uyehara
QUANTITIES		

STATE OF CALIFORNIA
DEPARTMENT OF TRANSPORTATION

DIVISION OF ENGINEERING SERVICES
ARCHITECTURAL AND STRUCTURAL DESIGN

BRIDGE NO. 17M5717
POST MILE 15.9

NEVADA CITY MAINTENANCE STATION
RESIDENT MECHANIC'S FACILITY
FOUNDATION DETAILS

SHEET **ST1-5**

DOES SD Imperial Rev. 9/02

ORIGINAL SCALE IN INCHES FOR REDUCED PLANS 0 1 2 3

CU 03225
EA 318001

DISREGARD PRINTS BEARING EARLIER REVISION DATES → 11-19-07

REVISION DATES (PRELIMINARY STAGE ONLY) SHEET OF

20-JAN-2010 14:04

st1_05.dgn

DIST.	COUNTY	ROUTE	POST MILES TOTAL PROJECT	SHEET NO.	TOTAL SHEETS
03	Nev	5717		64	106

Joseph Camilleri 10-30-08
REGISTERED CIVIL ENGINEER DATE

REGISTERED PROFESSIONAL ENGINEER
Joseph F. Camilleri
No. 3656
Exp. 3-31-10
STRUCTURAL
STATE OF CALIFORNIA

1-26-09
PLANS APPROVAL DATE

The State of California or its officers or agents shall not be responsible for the accuracy or completeness of electronic copies of this plan sheet.

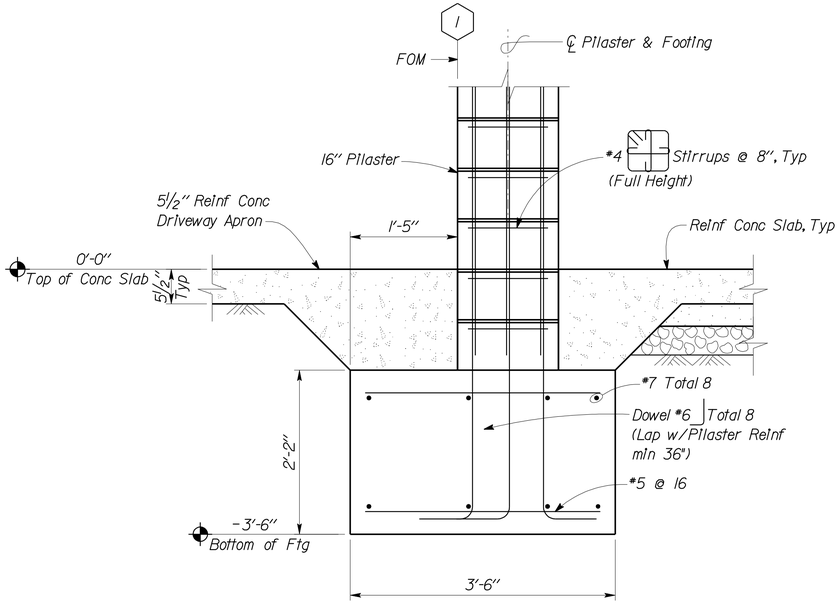

1 **16" CMU PILASTER FOOTING**
Scale 1" = 1' - 0"

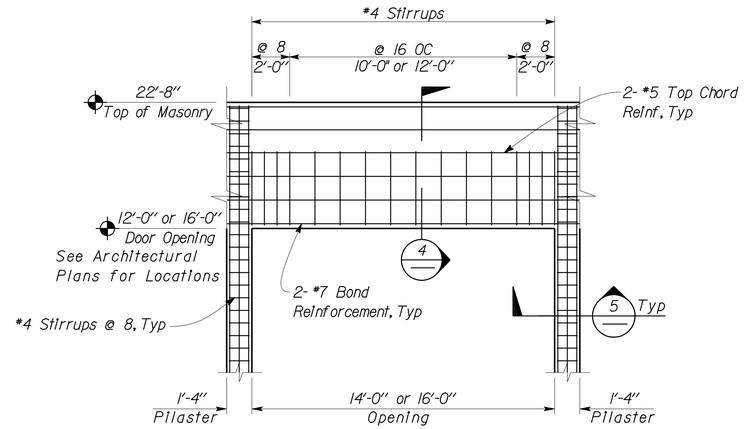

NOTE:
Pilasters are Full Height.

3 **LINTEL REINFORCEMENT**
Scale ¼" = 1' - 0"

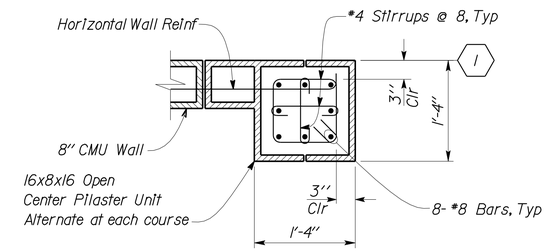

5 **16" PILASTER DETAIL**
Scale 1" = 1' - 0"

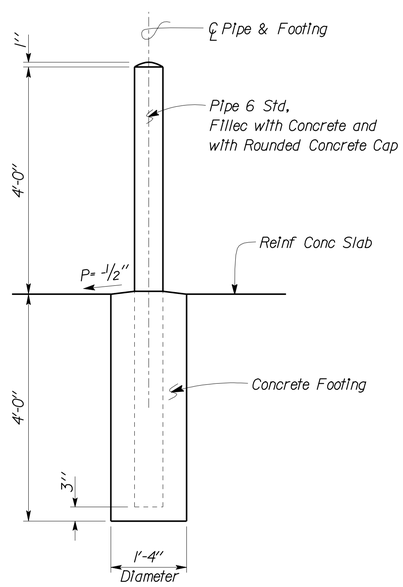

2 **PIPE GUARD POST DETAIL**
No Scale

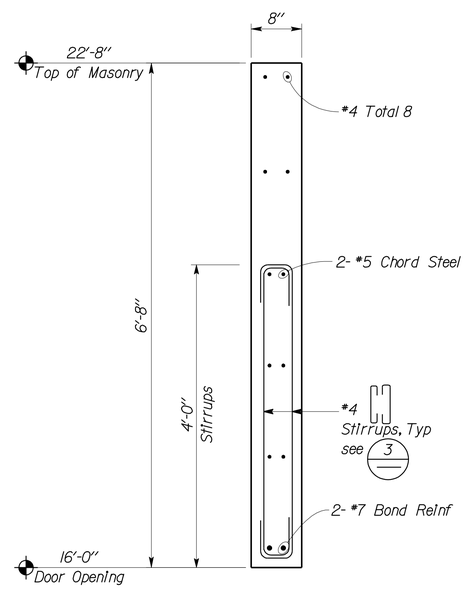

4 **LINTEL DETAIL**
Scale 1" = 1' - 0"

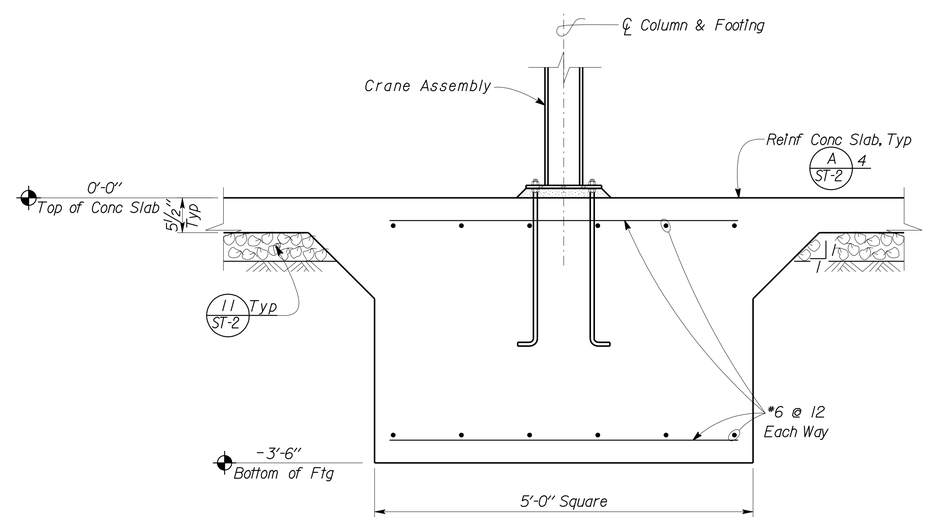

NOTE:
Crane Manufacurer shall provide Footing Attachment subject to Review by Engineer.

6 **CRANE FOOTING DETAIL**
Scale 1" = 1' - 0"

DESIGN	BY Joseph Camilleri	CHECKED Justin Uyehara	
DETAILS	BY P. von Savoye	CHECKED Justin Uyehara	
QUANTITIES	BY	CHECKED	

STATE OF CALIFORNIA
DEPARTMENT OF TRANSPORTATION

DIVISION OF ENGINEERING SERVICES
ARCHITECTURAL AND STRUCTURAL DESIGN

BRIDGE NO. 17M5717
POST MILE 15.9

NEVADA CITY MAINTENANCE STATION RESIDENT MECHANIC'S FACILITY

PILASTER AND LINTEL DETAILS

SHEET **ST1-6**

DOES SD Imperial Rev. 9/02

ORIGINAL SCALE IN INCHES FOR REDUCED PLANS 0 1 2 3

CU 03225
EA 318001

DISREGARD PRINTS BEARING EARLIER REVISION DATES → 11-19-07

REVISION DATES (PRELIMINARY STAGE ONLY) SHEET OF

st1_06.dgn

20-JAN-2010 14:04

DIST.	COUNTY	ROUTE	POST MILES TOTAL PROJECT	SHEET NO.	TOTAL SHEETS
03	Nev	5717	15.9	65	106

Joseph Camilleri 10-30-08
REGISTERED CIVIL ENGINEER DATE

REGISTERED PROFESSIONAL ENGINEER
Joseph F. Camilleri
No. 3656
Exp. 3-31-10
STRUCTURAL
STATE OF CALIFORNIA

1-26-09
PLANS APPROVAL DATE

The State of California or its officers or agents shall not be responsible for the accuracy or completeness of electronic copies of this plan sheet.

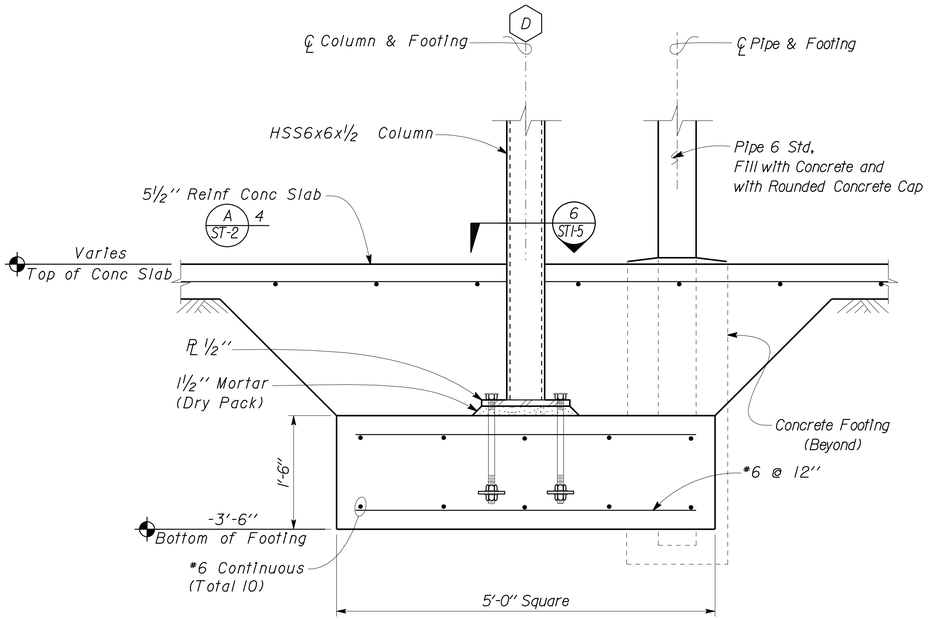

NOTES:
1. Pipe Guard Post not shown, see ST1-1 & 2/ST1-6
2. Provide Blockout for Pipe 6 Std. through Footing.

1 COLUMN FOOTING
Scale 1" = 1'-0"

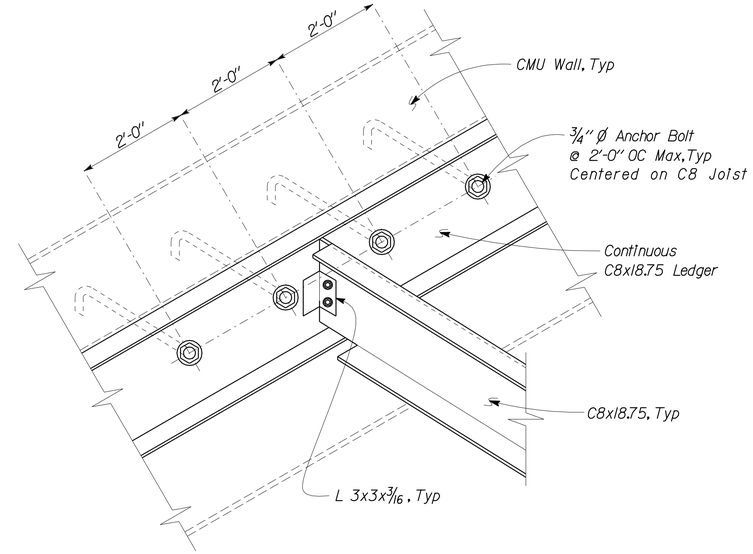

3 JOIST TO CMU WALL CONNECTION DETAIL
No Scale

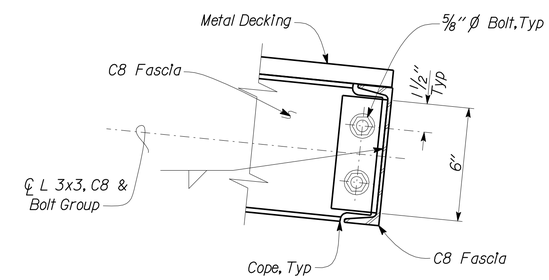

5 FASCIA TO FASCIA SECTION
No Scale

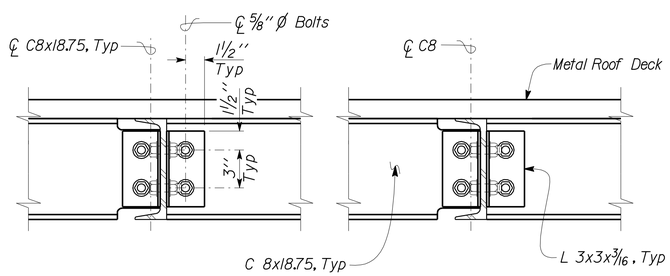

2 ROOF FRAMING SECTION
Scale 2" = 1'-0"

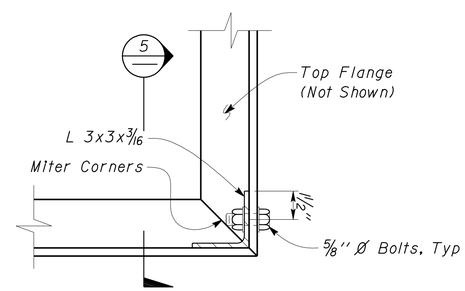

4 FASCIA TO FASCIA PLAN
Scale 3" = 1'-0"

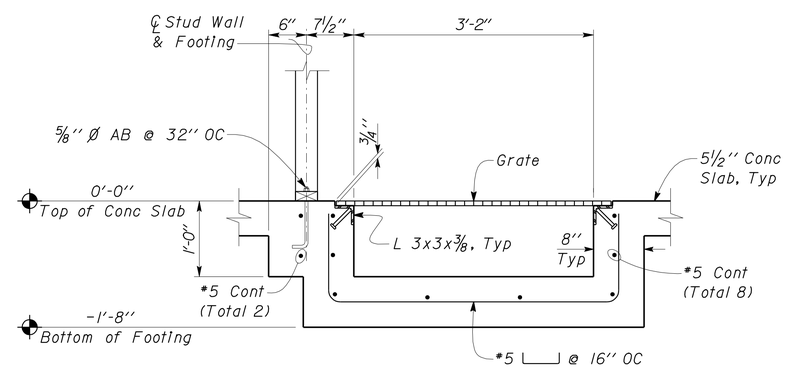

NOTE:
1. Concrete Slab Reinf not shown for clarity.
2. For additional Details, see Architectural Sheet A/A-8

6 PIT DETAIL
Scale 1" = 1'-0"

DESIGN	BY Joseph Camilleri	CHECKED Justin Uyehara	
DETAILS	BY P. von Savoye	CHECKED Justin Uyehara	
QUANTITIES	BY	CHECKED	

STATE OF CALIFORNIA
DEPARTMENT OF TRANSPORTATION

DIVISION OF ENGINEERING SERVICES
ARCHITECTURAL AND STRUCTURAL DESIGN

BRIDGE NO. 17M5717
POST MILE 15.9

NEVADA CITY MAINTENANCE STATION
RESIDENT MECHANIC'S FACILITY
FOOTING AND ROOF FRAMING DETAILS

SHEET ST1-7

DOES SD Imperial Rev. 9/02

ORIGINAL SCALE IN INCHES FOR REDUCED PLANS 0 1 2 3

CU 03225
EA 318001

DISREGARD PRINTS BEARING EARLIER REVISION DATES → 10-02-08

REVISION DATES (PRELIMINARY STAGE ONLY) SHEET OF

20-JAN-2010 14:05
st1_07.dgn

DIST.	COUNTY	ROUTE	POST MILES TOTAL PROJECT	SHEET NO.	TOTAL SHEETS
03	Nev	5717		66	106

Joseph Camilleri 10-30-08
REGISTERED CIVIL ENGINEER DATE

REGISTERED PROFESSIONAL ENGINEER Joseph F. Camilleri No. 3656 Exp. 3-31-10 STRUCTURAL STATE OF CALIFORNIA

1-26-09
PLANS APPROVAL DATE

The State of California or its officers or agents shall not be responsible for the accuracy or completeness of electronic copies of this plan sheet.

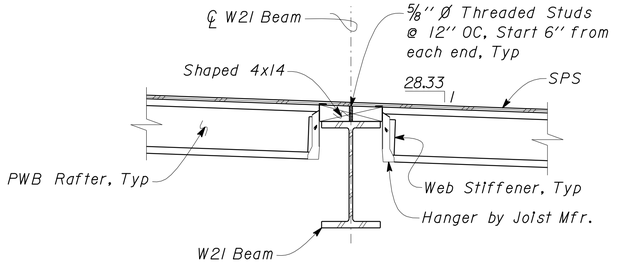

1 PWB RAFTER TO BEAM CONNECTION
Scale 3/4" = 1' - 0"

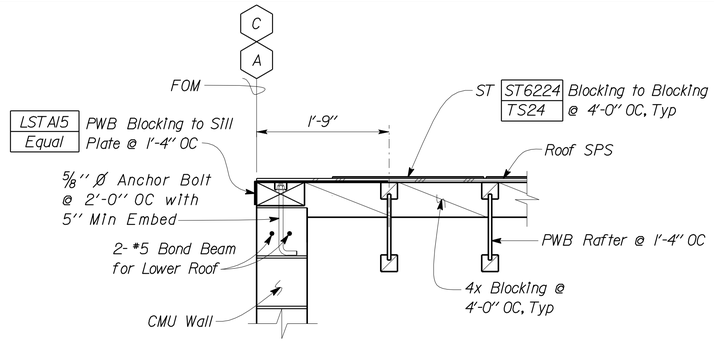

NOTE:
For details and notes not shown, see 3

4 END SECTION
Scale 1" = 1' - 0"

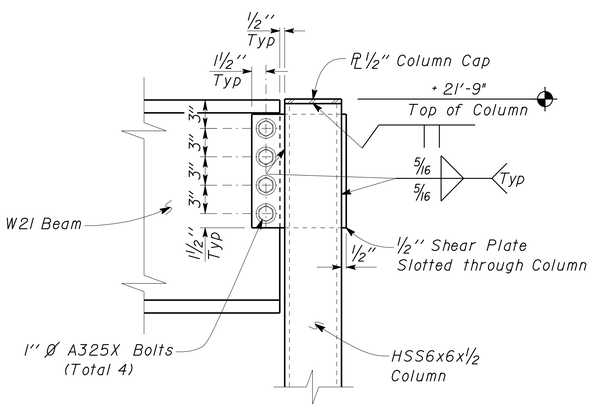

NOTE:
CMU Wall not shown for clarity.

2 BEAM TO HSS COLUMN CONNECTION
Scale 1 1/2" = 1' - 0"

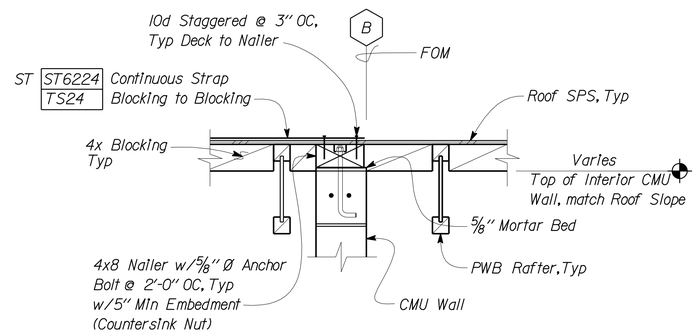

5 ROOF TO WALL CONNECTION
Scale 1" = 1' - 0"

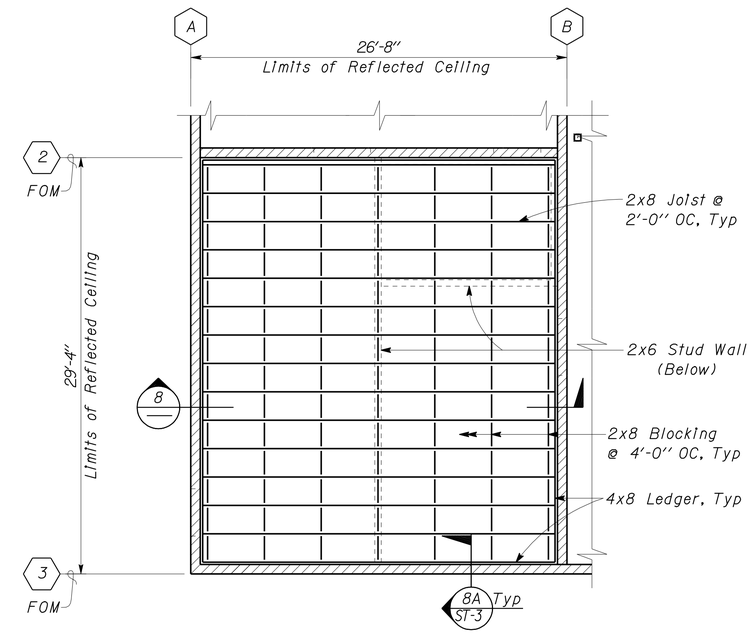

7 REFLECTED CEILING PLAN
Scale 3/16" = 1' - 0"

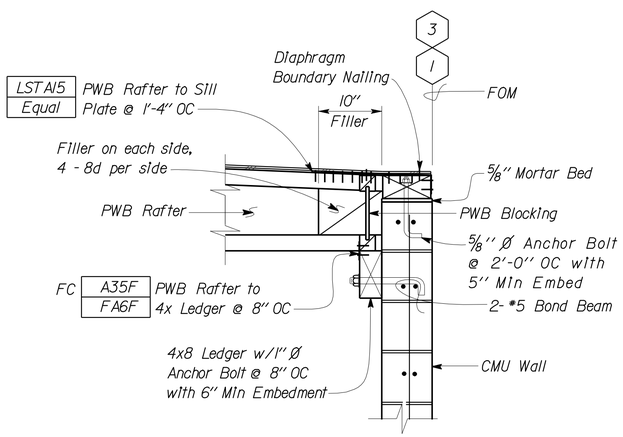

3 ROOF SECTION
Scale 1" = 1' - 0"

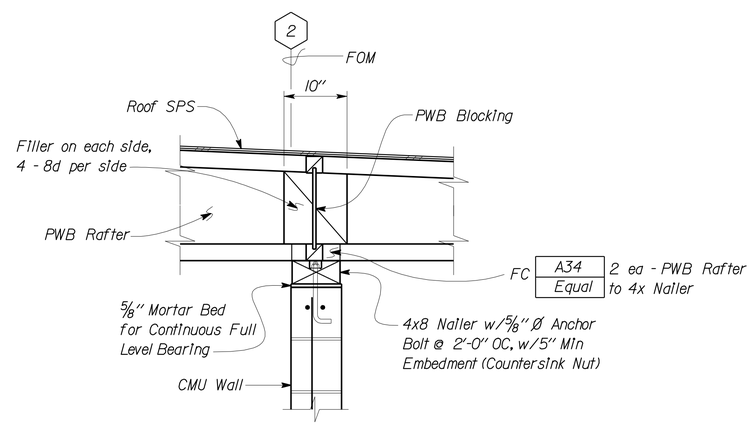

6 END SECTION
Scale 1" = 1' - 0"

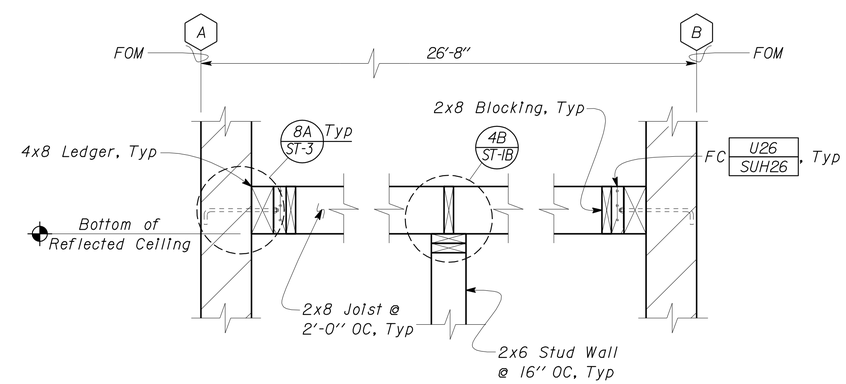

8 REFLECTED CEILING SECTION
Scale 1" = 1' - 0"

DESIGN	BY Joseph Camilleri	CHECKED Justin Uyehara	
DETAILS	BY P. von Savoye	CHECKED Justin Uyehara	
QUANTITIES	BY	CHECKED	

STATE OF CALIFORNIA
DEPARTMENT OF TRANSPORTATION

DIVISION OF ENGINEERING SERVICES
ARCHITECTURAL AND STRUCTURAL DESIGN

BRIDGE NO. 17M5717
POST MILE 15.9

NEVADA CITY MAINTENANCE STATION
RESIDENT MECHANIC'S FACILITY

FRAMING DETAILS

SHEET **ST1-8**

DOES SD Imperial Rev. 9/02

ORIGINAL SCALE IN INCHES FOR REDUCED PLANS 0 1 2 3

CU 03225
EA 318001

DISREGARD PRINTS BEARING EARLIER REVISION DATES → 11-21-07

REVISION DATES (PRELIMINARY STAGE ONLY) SHEET OF

st1_08.dgn

20-JAN-2010 14:05

DIST.	COUNTY	ROUTE	POST MILES TOTAL PROJECT	SHEET NO.	TOTAL SHEETS
03	Nev	5717		67	106

Joseph Camilleri 10-30-08
REGISTERED CIVIL ENGINEER DATE

REGISTERED PROFESSIONAL ENGINEER
Joseph F. Camilleri
No. 3656
Exp. 3-31-10
STRUCTURAL
STATE OF CALIFORNIA

1-26-09
PLANS APPROVAL DATE

The State of California or its officers or agents shall not be responsible for the accuracy or completeness of electronic copies of this plan sheet.

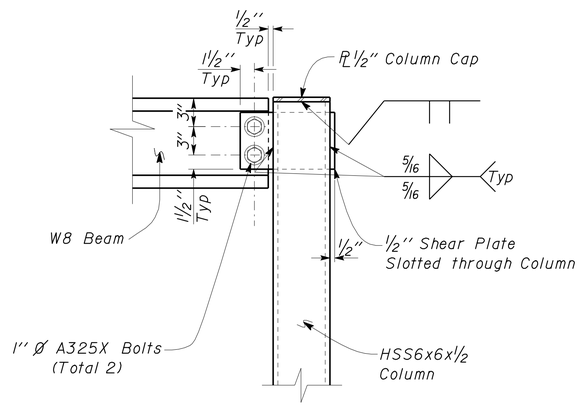

NOTE:
CMU Wall not shown for clarity.
W8 Beam and shear plate is sloped at 2 to 12.
Top of column is sloped at 2 to 12.

1 CANOPY BEAM TO HSS COLUMN CONNECTION
Scale 1 1/2" = 1'-0"

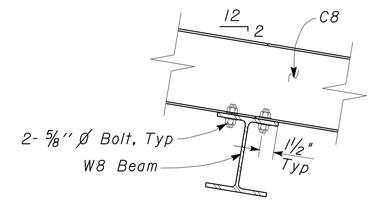

3 CHANNEL TO BEAM CONNECTION
Scale 1 1/2" = 1'-0"

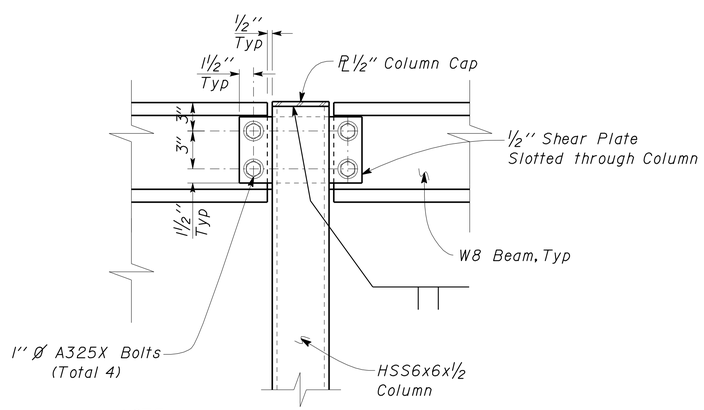

NOTE:
For Details and Notes not shown, see 1/S1m

2 CANOPY BEAM TO HSS COLUMN CONNECTION
Scale 1 1/2" = 1'-0"

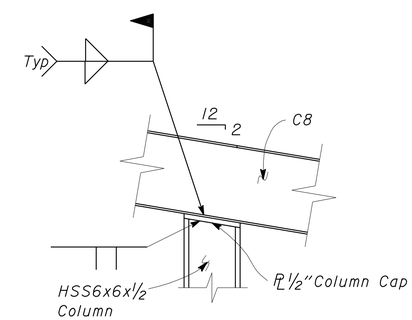

NOTE:
W8 beam framing into column not shown for clarity.

4 CHANNEL TO HSS COLUMN CONNECTION
Scale 1 1/2" = 1'-0"

DESIGN	BY Joseph Camilleri	CHECKED Justin Uyehara	
DETAILS	BY P. von Savoye	CHECKED Justin Uyehara	
QUANTITIES	BY	CHECKED	

STATE OF CALIFORNIA
DEPARTMENT OF TRANSPORTATION

DIVISION OF ENGINEERING SERVICES
ARCHITECTURAL AND STRUCTURAL DESIGN

BRIDGE NO. 17M5717
POST MILE 15.9

NEVADA CITY MAINTENANCE STATION
RESIDENT MECHANIC'S FACILITY
FRAMING DETAILS

SHEET ST1-9

DOES SD Imperial Rev. 9/02

ORIGINAL SCALE IN INCHES FOR REDUCED PLANS 0 1 2 3

CU 03225
EA 318001

DISREGARD PRINTS BEARING EARLIER REVISION DATES → 11-19-07

REVISION DATES (PRELIMINARY STAGE ONLY) SHEET OF

20-JAN-2010 14:05
st1_09.dgn

DIST.	COUNTY	ROUTE	POST MILES TOTAL PROJECT	SHEET NO.	TOTAL SHEETS
03	Nev	5717		68	106

Joseph Camilleri 10-30-08
REGISTERED CIVIL ENGINEER DATE

REGISTERED PROFESSIONAL ENGINEER
Joseph F. Camilleri
No. 3656
Exp. 3-31-10
STRUCTURAL
STATE OF CALIFORNIA

1-26-09
PLANS APPROVAL DATE

The State of California or its officers or agents shall not be responsible for the accuracy or completeness of electronic copies of this plan sheet.

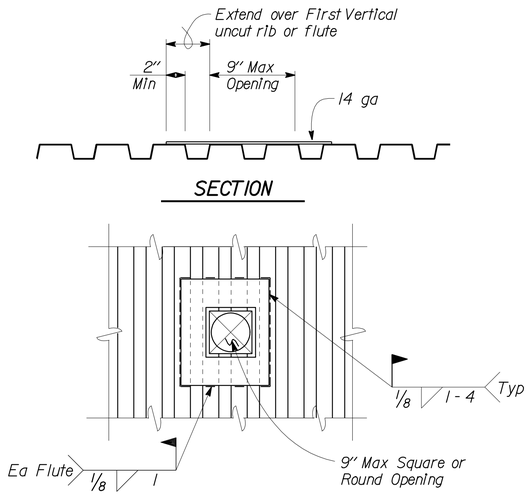

NOTE:
Openings Smaller than 4"x4" need no Reinforcement.

1 ROOF DECK OPENING TYPICAL DETAIL AT MAXIMUM 9" SQUARE OPENING

No Scale

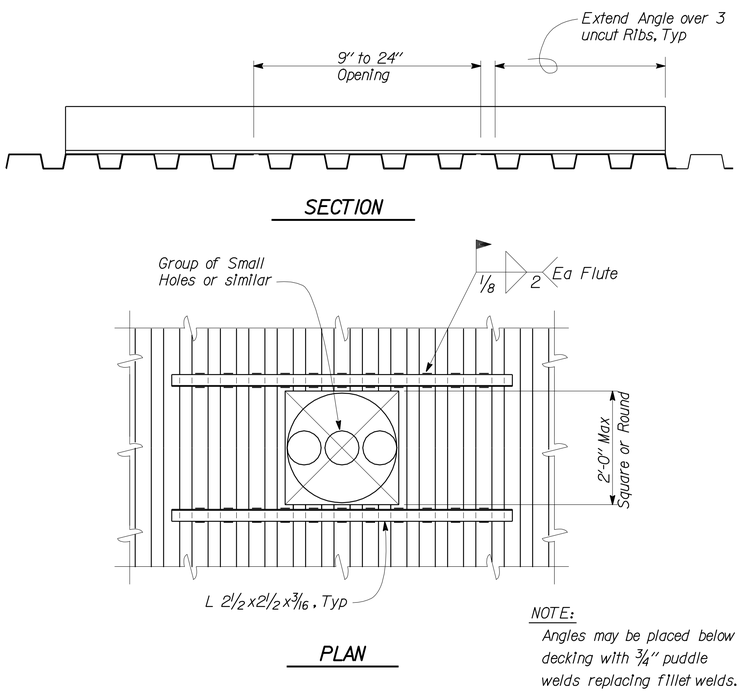

NOTE:
Angles may be placed below decking with 3/4" puddle welds replacing fillet welds.

2 ROOF DECK OPENING TYPICAL DETAIL AT MAXIMUM 24" SQUARE OPENING

No Scale

A Deck Attachment Schedule

Deck Type	Depth & Gauge	Perpendicular Supports	Parallel Supports	Side Laps	Diaphram Shear Capacity
Resident Mechanic's Facility	1 1/2" x 18 ga 3 or more Spans	4 - #12 SDSTS screws per sheet	#12 SDSTS @ 12" CC	#10 SDSTS screws at 12" CC	400 plf

1. See B for section properties and C for typical connection patterns.

B Section Properties

Location	Depth & Gauge	Design Thickness	Nominal Pitch	Cover Width	Moment of Inertia	Positive Section Modulus	Negative Section Modulus	Minimum Yield Strength	Allowable Flexural Stress
Construction Acceptance Testing Facility	1 1/2" x 18 ga	0.0474 in	6.00 in	36 in	0.292 in^4/ft	0.318 in^3/ft	0.327 in^3/ft	33,000 psi	20,000 psi

C Metal Deck & Connection Patterns

Location	Profile	#12 SDSTS
Construction Acceptance Testing Facility	30"	4

	BY	CHECKED
DESIGN	Joseph Camilleri	Justin Uyehara
DETAILS	P. von Savoye	Justin Uyehara
QUANTITIES		

STATE OF CALIFORNIA
DEPARTMENT OF TRANSPORTATION

DIVISION OF ENGINEERING SERVICES
ARCHITECTURAL AND STRUCTURAL DESIGN

BRIDGE NO. 17M5717
POST MILE 15.9

NEVADA CITY MAINTENANCE STATION
RESIDENT MECHANIC'S FACILITY

ROOF DECK OPENING AND WELDING DETAILS

SHEET ST1-10

DOES SD Imperial Rev. 9/02

ORIGINAL SCALE IN INCHES FOR REDUCED PLANS 0 1 2 3

CU 03225
EA 318001

DISREGARD PRINTS BEARING EARLIER REVISION DATES → 11-13-07

REVISION DATES (PRELIMINARY STAGE ONLY) SHEET OF

st1_10.dgn

20-JAN-2010 14:05

DIST.	COUNTY	ROUTE	POST MILES TOTAL PROJECT	SHEET NO.	TOTAL SHEETS
03	Nev	5717		69	106

Joseph Camilleri 10-30-08
REGISTERED CIVIL ENGINEER DATE

REGISTERED PROFESSIONAL ENGINEER
Joseph F. Camilleri
No. 3656
Exp. 3-31-10
STRUCTURAL
STATE OF CALIFORNIA

1-26-09
PLANS APPROVAL DATE

The State of California or its officers or agents shall not be responsible for the accuracy or completeness of electronic copies of this plan sheet.

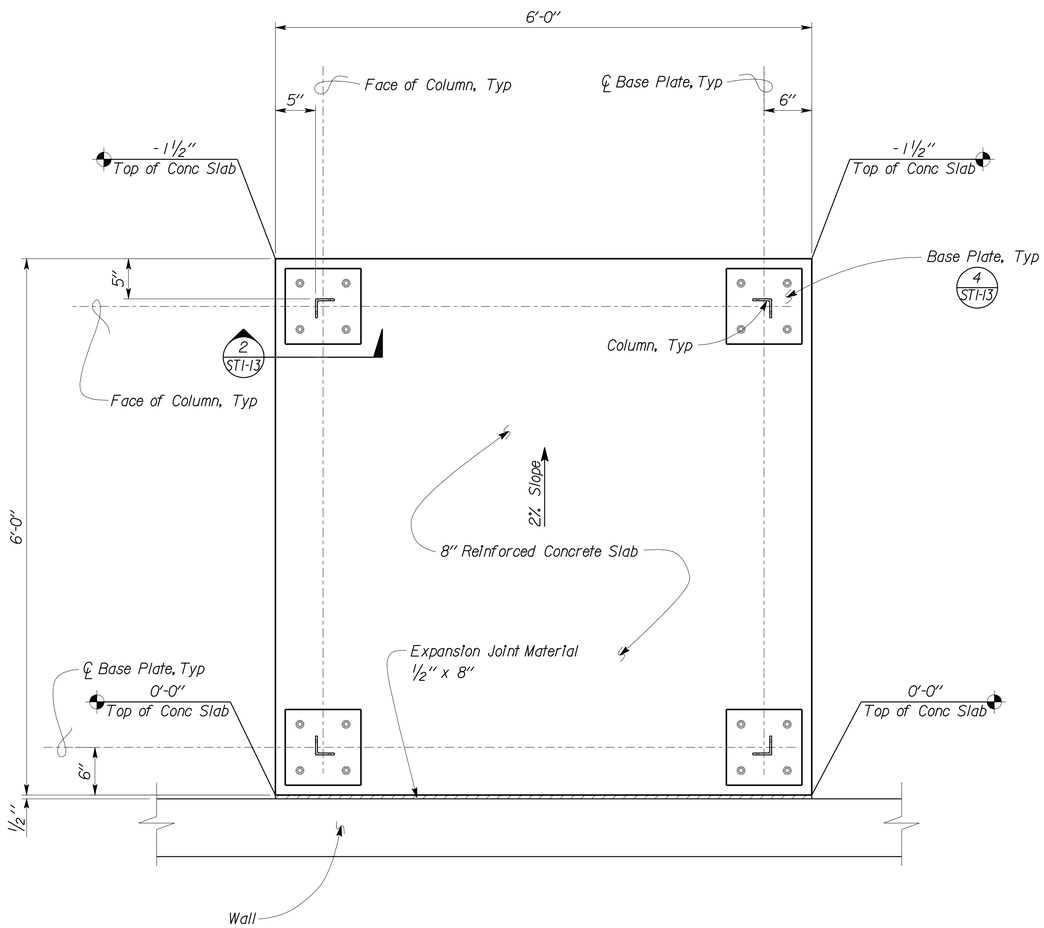

1 EVAPORATIVE COOLER PLATFORM FOUNDATION PLAN
No Scale

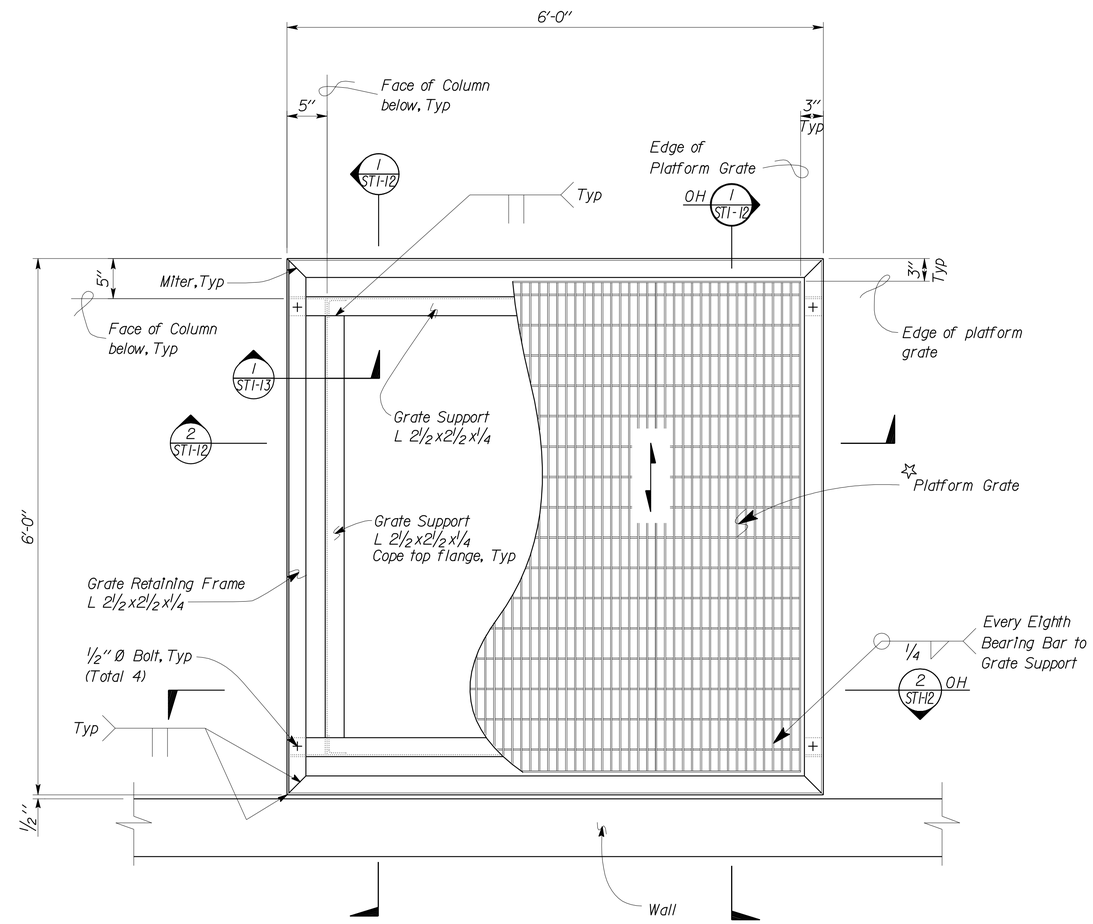

☆ Welded Steel Grate :
Bearing Bars 1 1/4" x 3/16" @ 1 1/4" C-C
Cross Bars 1/4" Ø @ 4" C-C
Trim Bars 1 1/4" x 3/16" fillet welded to ends of each Bearing Bar on both sides

Indicates direction of bearing bars

2 EVAPORATIVE COOLER PLATFORM PLAN
No Scale

	BY	CHECKED
DESIGN	Joseph Camilleri	Justin Uyehara
DETAILS	P. von Savoye	Justin Uyehara
QUANTITIES		

STATE OF CALIFORNIA
DEPARTMENT OF TRANSPORTATION

DIVISION OF ENGINEERING SERVICES
ARCHITECTURAL AND STRUCTURAL DESIGN

BRIDGE NO. 17M5717
POST MILE 15.9

NEVADA CITY MAINTENANCE STATION
RESIDENT MECHANIC'S FACILITY
EVAPORATIVE COOLER PLATFORM PLANS

SHEET ST1-11

DOES SD Imperial Rev. 9/02

ORIGINAL SCALE IN INCHES FOR REDUCED PLANS 0 1 2 3

CU 03225
EA 318001

DISREGARD PRINTS BEARING EARLIER REVISION DATES → 11-19-07

REVISION DATES (PRELIMINARY STAGE ONLY) SHEET OF

st1_11.dgn

20-JAN-2010 14:05

DIST.	COUNTY	ROUTE	POST MILES TOTAL PROJECT	SHEET NO.	TOTAL SHEETS
03	Nev	5717		70	106

Joseph Camilleri 10-30-08
REGISTERED CIVIL ENGINEER DATE

REGISTERED PROFESSIONAL ENGINEER
Joseph F. Camilleri
No. 3656
Exp. 3-31-10
STRUCTURAL
STATE OF CALIFORNIA

1-26-09
PLANS APPROVAL DATE

The State of California or its officers or agents shall not be responsible for the accuracy or completeness of electronic copies of this plan sheet.

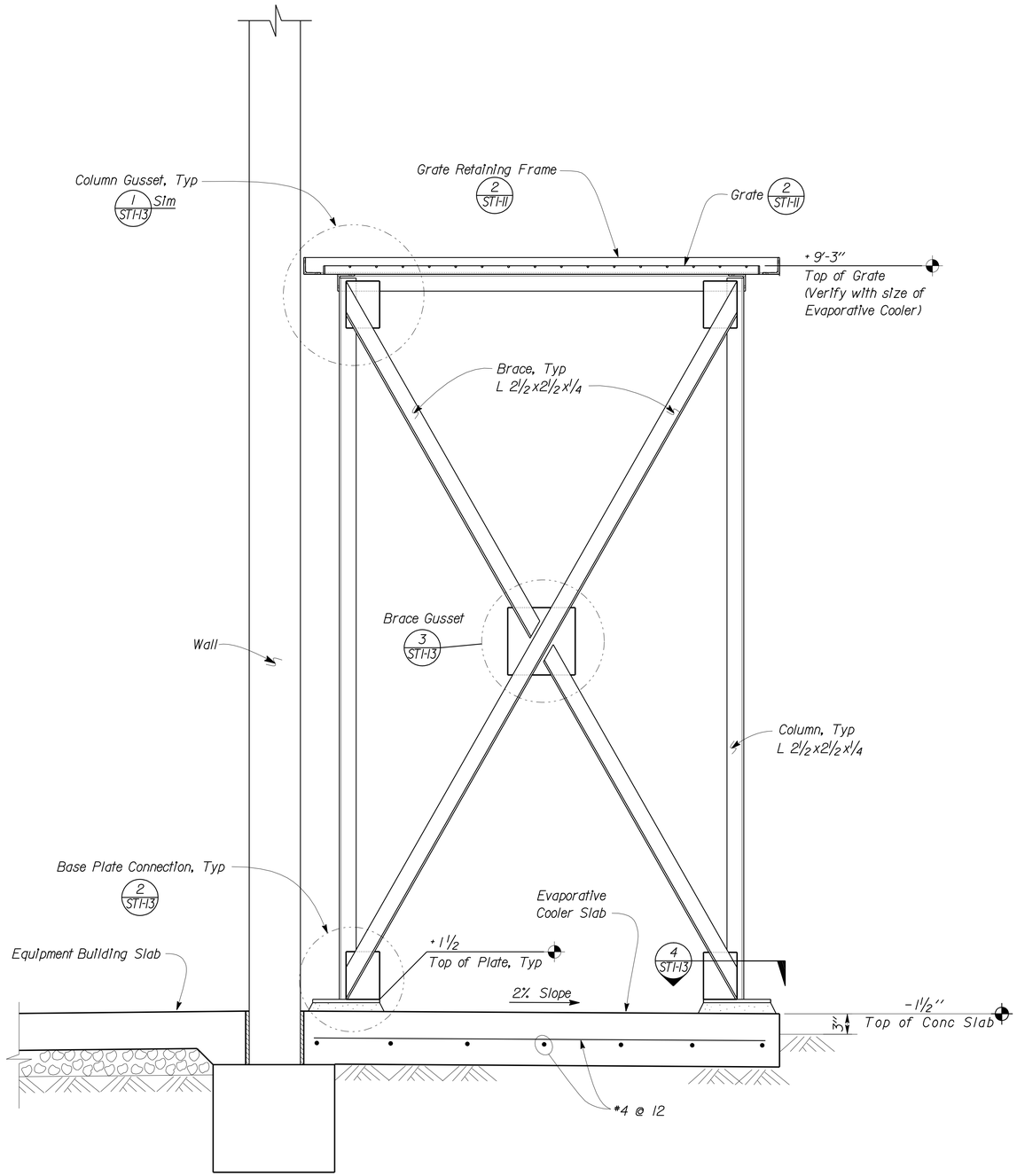

1 EVAPORATIVE COOLER PLATFORM ELEVATION
No Scale

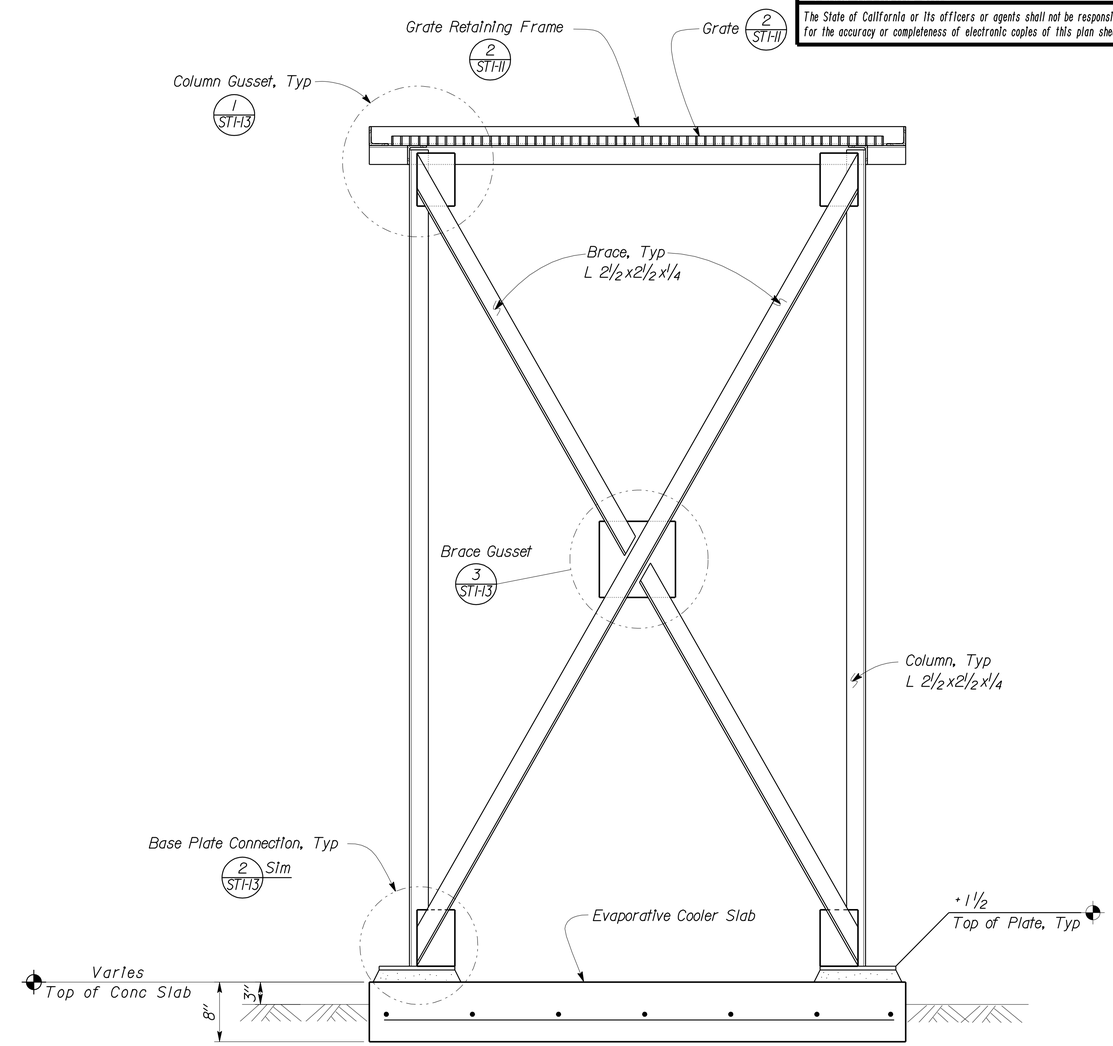

2 EVAPORATIVE COOLER PLATFORM ELEVATION
No Scale

DESIGN	BY Joseph Camilleri	CHECKED Justin Uyehara	
DETAILS	BY P. von Savoye	CHECKED Justin Uyehara	
QUANTITIES	BY	CHECKED	

STATE OF CALIFORNIA
DEPARTMENT OF TRANSPORTATION

DIVISION OF ENGINEERING SERVICES
ARCHITECTURAL AND STRUCTURAL DESIGN

BRIDGE NO. 17M5717
POST MILE 15.9

NEVADA CITY MAINTENANCE STATION
RESIDENT MECHANIC'S FACILITY
EVAPORATIVE COOLER PLATFORM ELEVATIONS

SHEET **ST1-12**

DOES SD Imperial Rev. 9/02

ORIGINAL SCALE IN INCHES FOR REDUCED PLANS 0 1 2 3

CU 03225
EA 318001

DISREGARD PRINTS BEARING EARLIER REVISION DATES → 11-19-07

REVISION DATES (PRELIMINARY STAGE ONLY) SHEET OF

20-JAN-2010 14:06

st1_12.dgn

DIST.	COUNTY	ROUTE	POST MILES TOTAL PROJECT	SHEET NO.	TOTAL SHEETS
03	Nev	5717		71	106

Joseph Camilleri 10-30-08
REGISTERED CIVIL ENGINEER DATE

REGISTERED PROFESSIONAL ENGINEER
Joseph F. Camilleri
No. 3656
Exp. 3-31-10
STRUCTURAL
STATE OF CALIFORNIA

1-26-09
PLANS APPROVAL DATE

The State of California or its officers or agents shall not be responsible for the accuracy or completeness of electronic copies of this plan sheet.

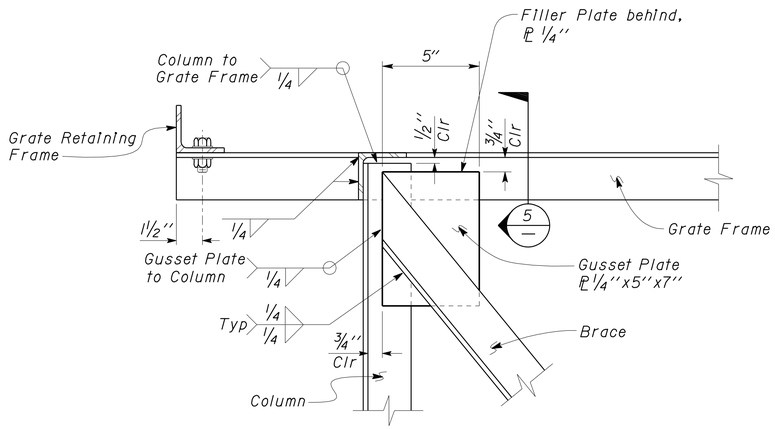

1 GRATE FRAME CONNECTION
No Scale

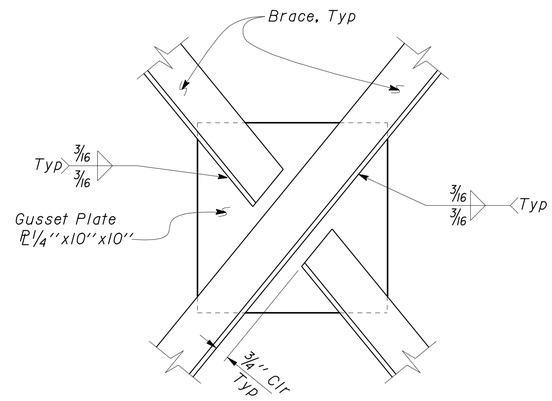

3 BRACE INTERSECTION
No Scale

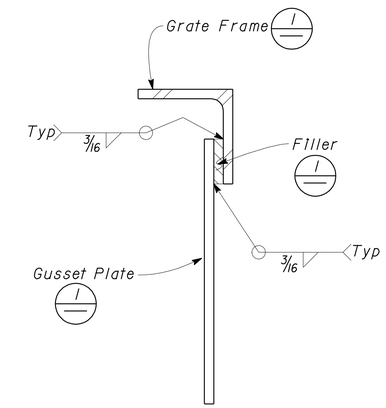

5 FILLER DETAIL
No Scale

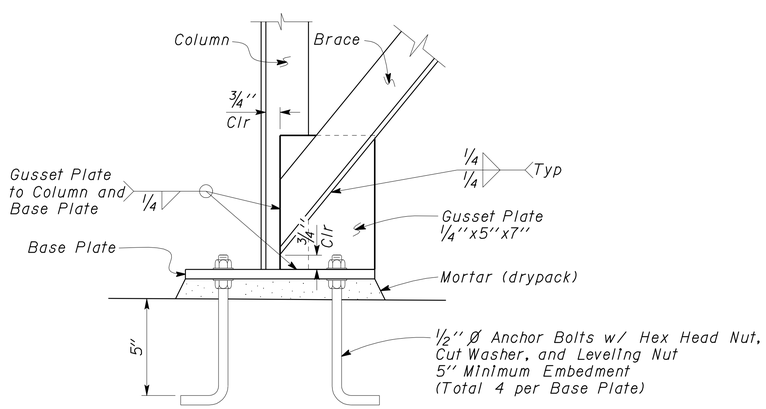

2 BASE PLATE CONNECTION
No Scale

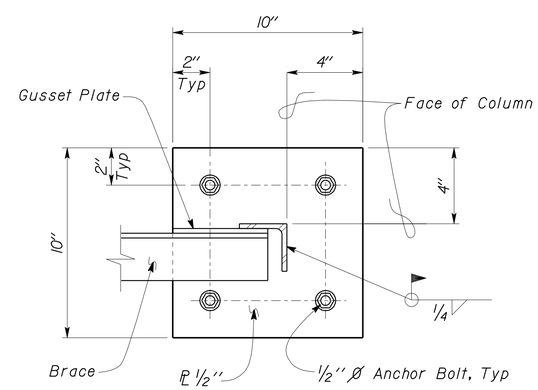

4 BASE PLATE DETAIL
No Scale

DESIGN	BY Joseph Camilleri	CHECKED Justin Uyehara	
DETAILS	BY P. von Savoye	CHECKED Justin Uyehara	
QUANTITIES	BY	CHECKED	

STATE OF CALIFORNIA
DEPARTMENT OF TRANSPORTATION

DIVISION OF ENGINEERING SERVICES
ARCHITECTURAL AND STRUCTURAL DESIGN

CU 03225
EA 318001

BRIDGE NO. 17M5717
POST MILE 15.9

NEVADA CITY MAINTENANCE STATION
RESIDENT MECHANIC'S FACILITY

EVAPORATIVE COOLER PLATFORM DETAILS

SHEET **ST1-13**

DOES SD Imperial Rev. 9/02

ORIGINAL SCALE IN INCHES FOR REDUCED PLANS 0 1 2 3

DISREGARD PRINTS BEARING EARLIER REVISION DATES → 11-13-07

REVISION DATES (PRELIMINARY STAGE ONLY) SHEET OF

st1_13.dgn 20-JAN-2010 14:06

DIST	COUNTY	ROUTE	POST MILES TOTAL PROJECT	SHEET No	TOTAL SHEETS
03	Nev	5717		72	106

Yue Wu 8-07-07
REGISTERED CIVIL ENGINEER

1-26-09
PLANS APPROVAL DATE

REGISTERED PROFESSIONAL ENGINEER
Yue Wu
No. C65429
Exp. 9-30-07
CIVIL
STATE OF CALIFORNIA

The State of California or its officers or agents shall not be responsible for the accuracy or completeness of electronic copies of this plan sheet.

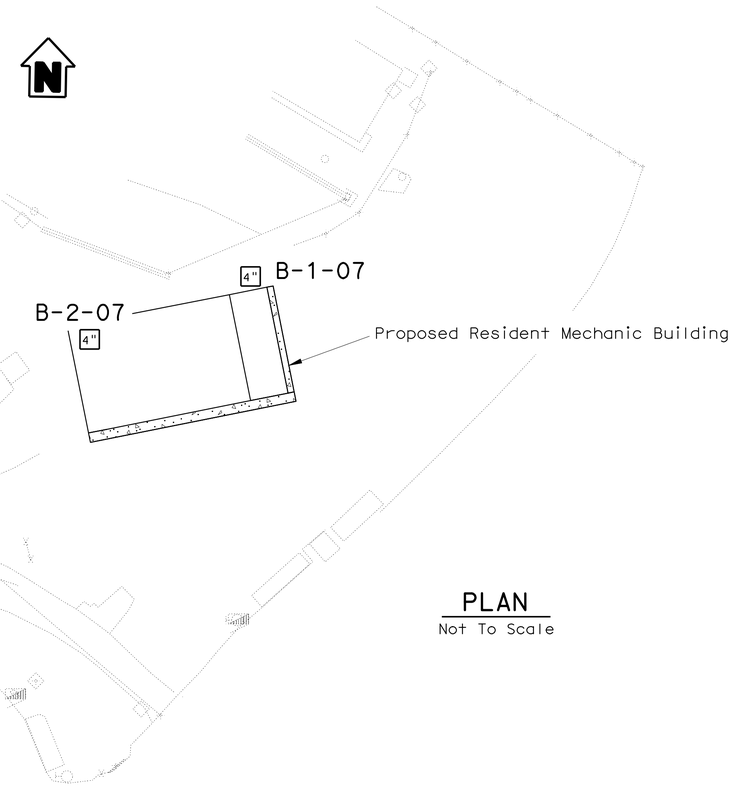

BENCH MARK

Approximate boring elevations were interpolated from Topo Zone maps.
Ref. http: http://www.topozone.com/maps

PLAN

Not To Scale

Note:

No groundwater encountered during field investigation.

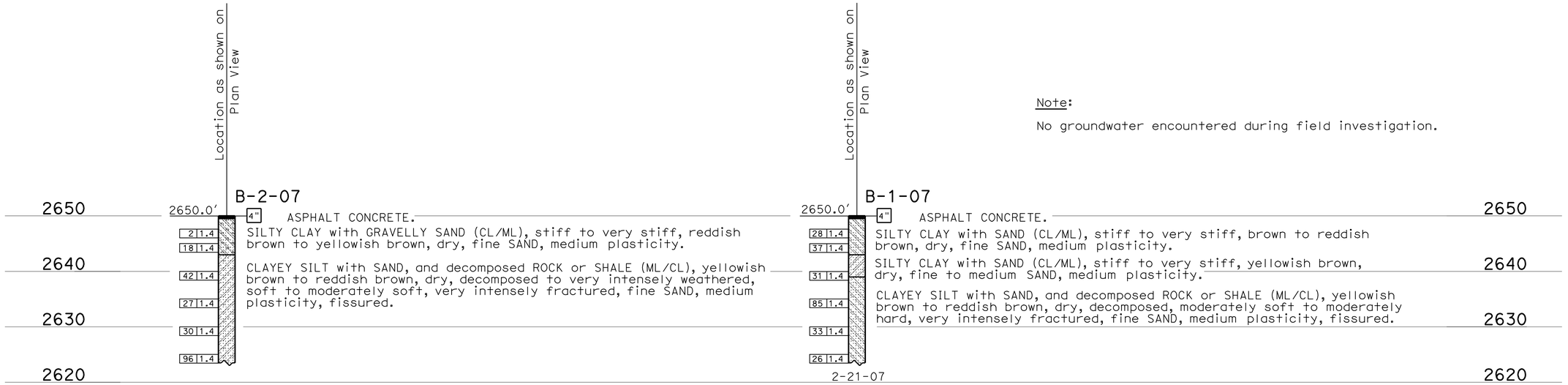

PROFILE

HOR. Not To Scale
VER. 1"=10

LEGEND OF BORING OPERATIONS

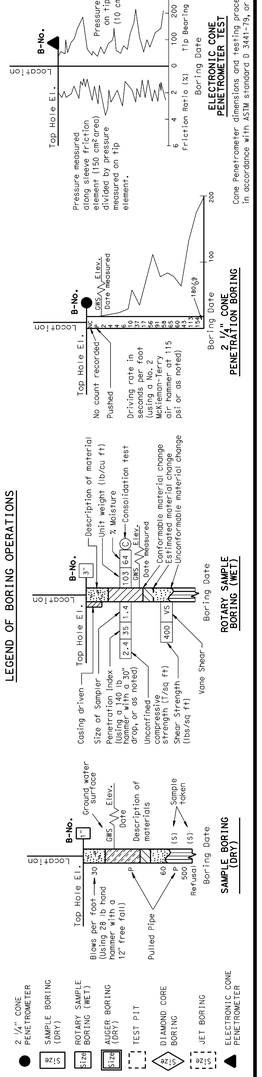

LEGEND OF EARTH MATERIALS

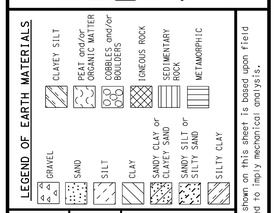

CONSISTENCY CLASSIFICATION FOR SOILS

According to the Standard Penetration Test

SPT N-Value (Blows/ Foot)	Granular	SPT N-Value (Blows/ Foot)	Cohesive
0-4	Very Loose	<2	Very Soft
5-10	Loose	2-4	Soft
11-30	Medium Dense	5-8	Medium stiff
31-50	Dense	9-15	Stiff
>50	Very Dense	16-30	Very Stiff
		31-60	Hard
		>60	Very Hard

NOTE: Classification of earth material as shown on this sheet is based upon field inspection and is not to be construed to imply mechanical analysis.

ENGINEERING SERVICES	GEOTECHNICAL SERVICES
DRAWN BY	W. Tang 08/07
CHECKED BY	Y. Wu

FIELD INVESTIGATION BY: Y. Wu

STATE OF CALIFORNIA DEPARTMENT OF TRANSPORTATION

DIVISION OF ENGINEERING SERVICES STRUCTURE DESIGN DESIGN BRANCH

BRIDGE NO. 17M5717
POST MILE 15.9

RESIDENT MECHANIC FACILITY AT NEVADA CITY MS

LOG OF TEST BORINGS

SHEET ST1-14

CU 03225
EA 318001

DISREGARD PRINTS BEARING EARLIER REVISION DATES 08-07-07

REVISION DATES (PRELIMINARY STAGE ONLY) SHEET OF

ORIGINAL SCALE IN INCHES FOR REDUCED PLANS 0 1 2 3

OSF GEOLOGIST LOG OF TEST BORINGS SHEET (ENGLISH) (REV. 7/25/00)

FILE => st1_14.dgn

USERNAME => trmikesl DATE PLOTTED => 20-JAN-2010 TIME PLOTTED => 14:06

DIST.	COUNTY	ROUTE	POST MILES TOTAL PROJECT	SHEET NO.	TOTAL SHEETS
03	Nev	5717		73	106

ACCESSIBILITY DESIGN APPROVAL STAMP
DOT / DES / OTA
03-318001
DISTRICT - EA
Reviewed by: YA WANG
Date: 10-27-08

CALIFORNIA STATE FIRE MARSHAL
APPROVED
Approval of this plan does not authorize or approve any omission or deviation from applicable regulations. Final approval is subject to field inspection. One set of approved plans shall be available on the project site at all times.
Reviewed by: JEFFREY SCHWARTZ
Approval date: 1/11/10

REGISTERED MECHANICAL ENGINEER — 10-27-08 DATE

REGISTERED PROFESSIONAL ENGINEER — Jack Wheeler — No. 21648 — Exp. 6-30-09 — MECH — STATE OF CALIFORNIA

1-26-09
PLANS APPROVAL DATE

The State of California or its officers or agents shall not be responsible for the accuracy or completeness of electronic copies of this plan sheet.

PLUMBING

- Cold Water
- A — Compressed Air
- G — Gas
- D — Equipment Drain
- F — Fire Water
- Hot Water
- Hot Water Return
- LPG — Liquified Petroleum Gas
- R — Relief Valve Discharge Pipe
- S — Sanitary Sewer
- Sanitary Sewer (above grade)
- Sanitary Sewer (below grade)
- Sanitary Sewer Vent
- W — Water

PIPE FITTINGS AND VALVES

- Cap ,Threaded
- Elbow,Turned Down
- Elbow,Turned Up
- Reducer,Concentric
- Pressure Gauge (with Valve and Snubber)
- Strainer
- Union
- Union,Insulating
- Valve,Ball
- Valve,Check
- Valve,Gas
- Valve,Gate
- Valve,Safety Relief
- Valve,Pressure Reducing
- Valve,Pressure/Temperature Relief
- Water Hammer Arrestor

HEATING, VENTILATING AND AIR CONDITIONING

- Balance Damper
- Flexible Duct
- EA — Exhaust Air
- RA — Return Air
- SA — Supply Air
- ER or CFM/ER CFM — Exhaust Register
- or SIZE CFM — Return
- or SIZE CFM — Supply Diffuser
- T — Thermostat
- TS — Time Switch
- Anode Test Station
- Three Wire Test Station
- F — Exhaust Fan
- FE — Fire Extinguisher

MISCELLANEOUS

- L — Angle
- ℄ — Centerline
- Ø — Diameter
- Section / Elevation Letter
- Sheet Number
- Detail Number
- Sheet Number

MECHANICAL ABBREVIATIONS:

A/C	Air Conditioning
ABS	Acrylonitrile Butadiene Styrene
AC	Air Compressor
AD	Air Drop
AP	Alternative Pipe
ATF	Automatic Transmission Fluid
AWG	American Wire Gauge
BFP	Backflow Preventer
BLDG	Building
BTU	British Thermal Unit
BTUH	British Thermal Unit Per Hour
BV	Balancing Valve
C	Conduit
CD	Ceiling Diffuser
CFM	Cubic Feet Per Minute
CI	Cast-Iron
CO	Cleanout
COTF	Cleanout Through Floor
COTG	Cleanout Through Grade
COTW	Cleanout To Wall
CV	Check Valve
CW	Cold Water
D	Depth
DB	Dry Bulb
DEF	Declassification Exhaust Fan
DH	Duct Heater
DIA	Diameter
(E)	Existing
EA	Exhaust Air
EC	Evaporative Cooler
EEW	Emergency Eyewash And Shower
EF	Exhaust Fan
EWC	Electric Water Cooler
EEF	Exhaust Evacuation Fan
FC	Flexible Connection
FD	Floor Drain
FDC	Fire Department Connection
FE	Fire Extinguisher
FEF	Fume Exhaust Fan
FG	Finish Grade
FH	Fire Hydrant
FL	Flow Line
FS	Flow Switch
GA	Gauge
GALV	Galvanized
GLV	Globe Valve
GPM	Gallons Per Minute
GSP	Galvanized Steel Pipe
GV	Gate Valve
GWH	Gas Water Heater
GYP	Gypsum
H	Height
HB	Hydrant Box
H/C	Hot Water,High Pressure Cleaner
HF	Hose Faucet
HLV	Heat Light Vent Fan
HVAC	Heating,Ventilating And Air Conditioning
HW	Hot Water
HZ	Hertz
ID	Inside Diameter
IE	Invert Elevation
IN	Inch
IPS	International Pipe Standard
KS	Kitchen Sink
LAV	Lavatory
LPG	Liquified Petroleum Gas
LR	Lube Reel
MAX	Maximum
MAN	Manhole
MIN	Minimum
NIC	Not In Contract
NO	Number
NPT	National Pipe Thread
NST	National Standard Thread
OA	Outside Air
OC	On Center
OD	Outside Diameter
OG	Original Ground
PCC	Portland Cement Concrete
PH	Phase
PRV	Pressure Reducing Valve
PSI	Pounds Per Square Inch
PVC	Polyvinyl Chloride
R	Radius
REG	Register
RA	Return Air
RCP	Reinforced Concrete Pipe
REQ	Required
RH	Radiant Heater
RV	Relief Valve
S/S	Service Sink
SA	Supply Air
SCH	Schedule
SDS	Sanitary Dump Station
SF	Supply Fan
SHR	Shower
SP	Static Pressure
SS	Sanitary Sewer
STA	Station
STD	Standard
T	Thermostat
TS	Time Switch
TYP	Typical
TW	Thermostat-Waterheater
TWH	Tankless Water Heater
UH	Unit Heater
URI	Urinal
V	Vent
VAC	Voltage,Alternating Current
VR	Vent Riser
VTR	Vent Thru Roof
W	Width
W/	With
W/O	Without
WB	Wet Bulb
WC	Water Closet
W.C.	Water Column
WH	Wall Heater
WHA	Water Hammer Arrestor
WLS	Water Level Switch
WP	Weatherproof
WS	Wash Sink
WSP	Welded Steel Pipe

(THIS SHEET ACCURATE FOR MECHANICAL WORK ONLY)

	BY	CHECKED
DESIGN	W.Thomas Hughes	Thomas Dietsch
DETAILS	W.Thomas Hughes	Thomas Dietsch
QUANTITIES	W.Thomas Hughes	Thomas Dietsch

STATE OF CALIFORNIA
DEPARTMENT OF TRANSPORTATION

DIVISION OF ENGINEERING SERVICES
ELECTRICAL-MECHANICAL-WATER AND WASTEWATER DESIGN

BRIDGE NO. 17M5717
POST MILE

NEVADA CITY MAINTENANCE STATION
RESIDENT MECHANIC'S FACILITY
ABBREVIATIONS AND LEGENDS

SHEET **M0-0**

DOES SD Imperial Rev. 9/02

ORIGINAL SCALE IN INCHES FOR REDUCED PLANS 0 1 2 3

CU 03225
EA 318001

DISREGARD PRINTS BEARING EARLIER REVISION DATES →
REVISION DATES (PRELIMINARY STAGE ONLY): 3/30/07 6/19/07 8/29/07 11/16/07 02/16/08 05/23/08 07/09/08 10/24/08
SHEET OF

20-JAN-2010 14:06
m0_00.dgn

DIST.	COUNTY	ROUTE	POST MILES TOTAL PROJECT	SHEET NO.	TOTAL SHEETS
03	Nev	5717		74	106

REGISTERED MECHANICAL ENGINEER — 10-27-08 DATE

REGISTERED PROFESSIONAL ENGINEER — Jack Wheeler — No. 21648 — Exp. 6-30-09 — MECH — STATE OF CALIFORNIA

1-26-09
PLANS APPROVAL DATE

The State of California or its officers or agents shall not be responsible for the accuracy or completeness of electronic copies of this plan sheet.

ACCESSIBILITY DESIGN APPROVAL STAMP
DOT / DES / OTA
03-318001
DISTRICT - EA
Reviewed by: YA WANG
Date: 10-27-08

CALIFORNIA STATE FIRE MARSHAL
APPROVED
Approval of this plan does not authorize or approve any omission or deviation from applicable regulations. Final approval is subject to field inspection. One set of approved plans shall be available on the project site at all times.
Reviewed by: JEFFREY SCHWARTZ
Approval date: 1/11/10

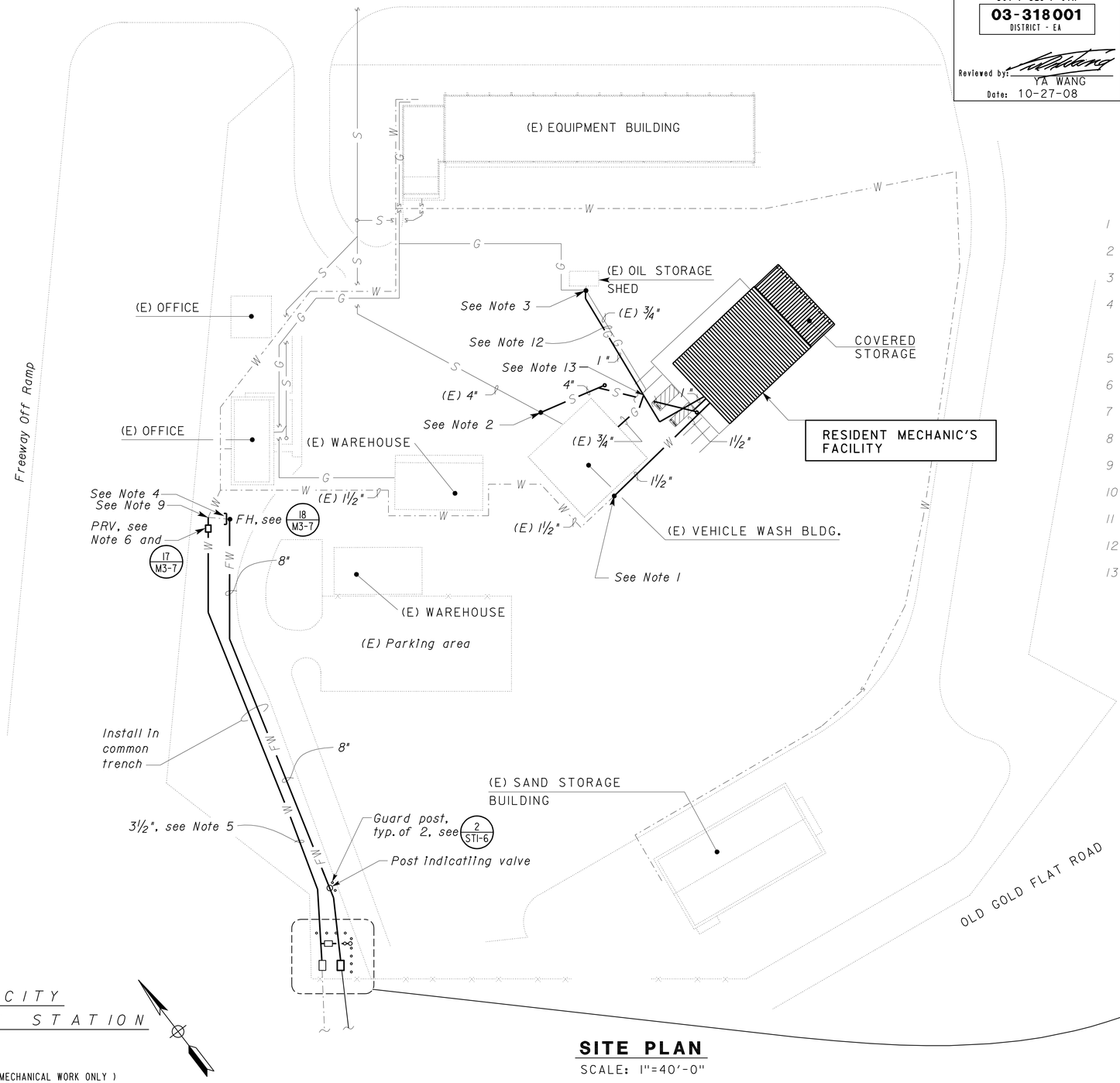

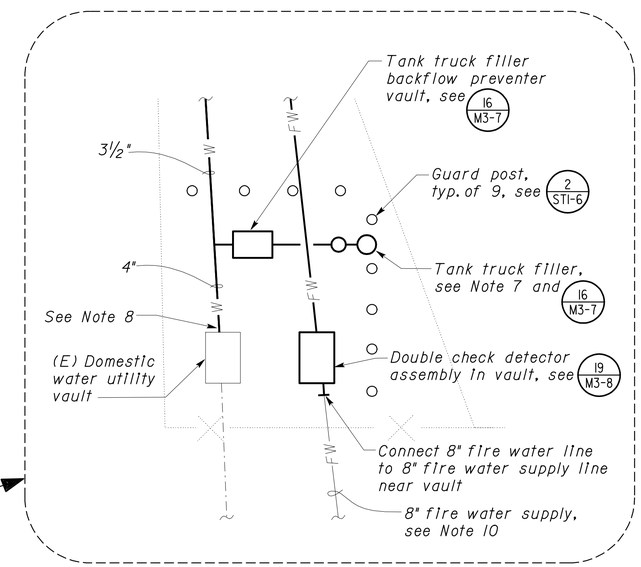

Notes:

1. Connect to existing 1½" water line.
2. Connect to existing 4" sewer line (where pipes meet at invert elevations.).
3. Connect to the existing ¾" medium pressure side of the gas line.
4. Remove existing fire hydrant, cut and cap existing water line to the hydrant and connect new fire hydrant to new 8" fire water line. See sheet M3-5 for thrust block details.
5. Abandon the (E) 2½" water line and install a new 3½" water line.
6. Remove and replace existing 2½" pressure reducing valve.
7. Tee off main water line with a 4" pipe 25 ft. northeast of fence, see Sheet M3-7.
8. Connect new 4" to (E) 3½" domestic water line at vault.
9. Connect new to to (E) water distribution system.
10. See Utility sheets for continuation.
11. Paint and insulate all piping above grade.
12. Remove (E) ¾" gas line in same trench as new 1" gas line.
13. Connect (E) ¾" vehicle wash rack building gas line to new 1" gas line.

NEVADA CITY MAINTENANCE STATION

(THIS SHEET ACCURATE FOR MECHANICAL WORK ONLY)

SITE PLAN
SCALE: 1"=40'-0"

DESIGN SUPERVISOR
DESIGN ENGINEER

	BY	CHECKED
DESIGN	W. Thomas Hughes	Thomas Dietsch
DETAILS	W. Thomas Hughes	Thomas Dietsch
QUANTITIES	W. Thomas Hughes	Thomas Dietsch

STATE OF CALIFORNIA
DEPARTMENT OF TRANSPORTATION

DIVISION OF ENGINEERING SERVICES
ELECTRICAL-MECHANICAL-WATER AND WASTEWATER DESIGN

BRIDGE NO. 17M5717
POST MILE

NEVADA CITY MAINTENANCE STATION
RESIDENT MECHANIC'S FACILITY
SITE PLAN

SHEET **M0-1**

DOES SD Imperial Rev. 9/02

ORIGINAL SCALE IN INCHES FOR REDUCED PLANS 0 1 2 3

CU 03225
EA 318001

DISREGARD PRINTS BEARING EARLIER REVISION DATES

REVISION DATES (PRELIMINARY STAGE ONLY) 3/30/07 6/19/07 8/29/07 11/01/07 02/01/08 05/23/08 07/09/08 10/24/08 — SHEET OF

20-JAN-2010 14:07
m0_01.dgn

DIST.	COUNTY	ROUTE	POST MILES TOTAL PROJECT	SHEET NO.	TOTAL SHEETS
03	Nev	5717		75	106

REGISTERED MECHANICAL ENGINEER — 10-27-08 DATE

REGISTERED PROFESSIONAL ENGINEER Jack Wheeler No. 21648 Exp. 6-30-09 MECH STATE OF CALIFORNIA

1-26-09
PLANS APPROVAL DATE

The State of California or its officers or agents shall not be responsible for the accuracy or completeness of electronic copies of this plan sheet.

ACCESSIBILITY DESIGN APPROVAL STAMP
DOT / DES / OTA
03-318001
DISTRICT - EA
Reviewed by: YA WANG
Date: 10-27-08

CALIFORNIA STATE FIRE MARSHAL APPROVED
Approval of this plan does not authorize or approve any omission or deviation from applicable regulations. Final approval is subject to field inspection. One set of approved plans shall be available on the project site at all times.
Reviewed by: JEFFREY SCHWARTZ
Approval date: 1/11/10

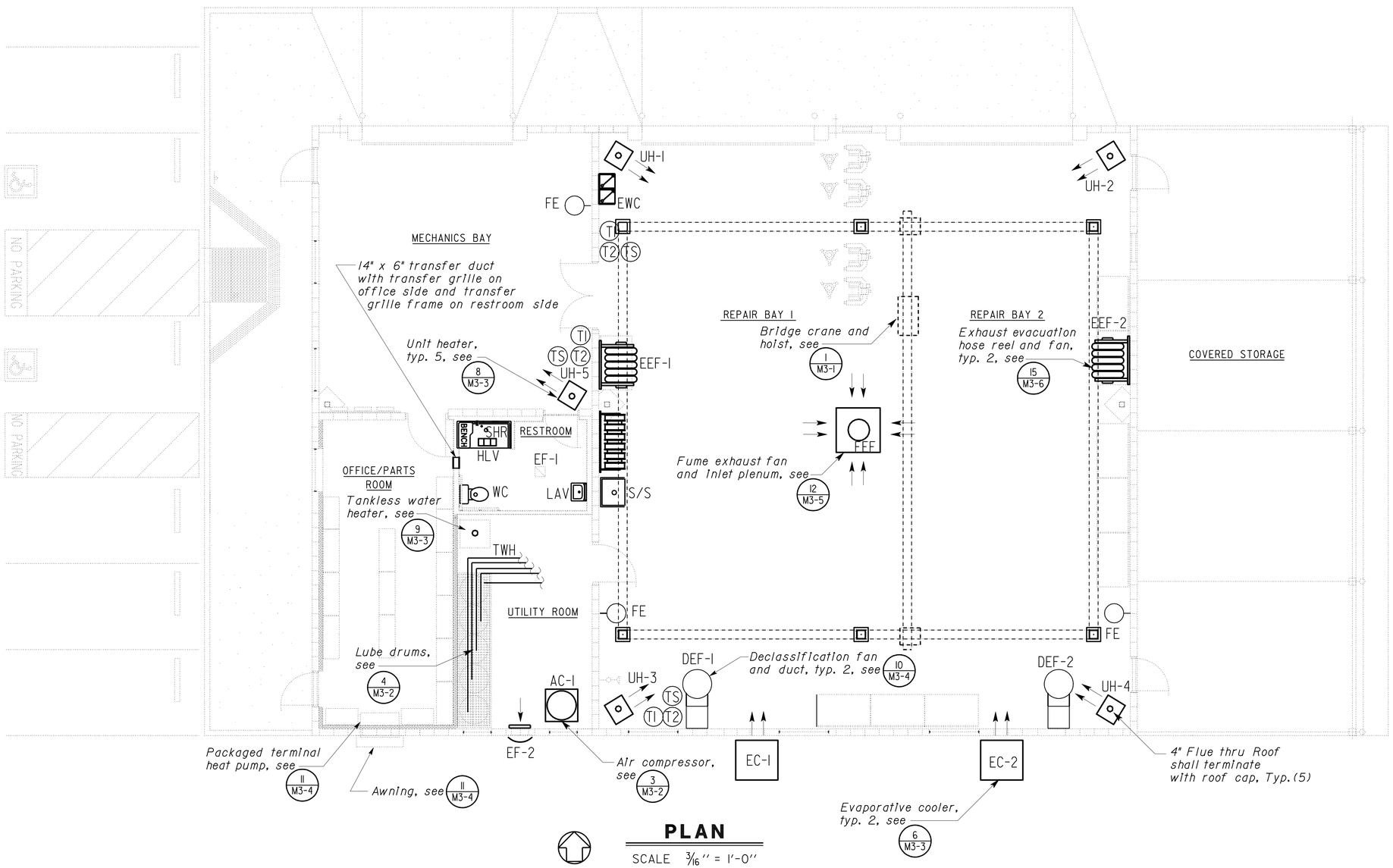

PLAN

SCALE 3/16" = 1'-0"

Notes:

1. *For gas and water lines, see Sheet M1-3.*
2. *For air lines, see Sheet M1-2.*
3. *FE, Fire Extinguisher shall be 4A: 60B: C and shall be located as shown on plans. See sheet A-3 for mounting details.*
4. *For Equipment Schedule, see Sheet M3-0.*

(THIS SHEET ACCURATE FOR MECHANICAL WORK ONLY)

	BY	CHECKED
DESIGN	W. Thomas Hughes	Thomas Dietsch
DETAILS	W. Thomas Hughes	Thomas Dietsch
QUANTITIES	W. Thomas Hughes	Thomas Dietsch

STATE OF CALIFORNIA
DEPARTMENT OF TRANSPORTATION

DIVISION OF ENGINEERING SERVICES
ELECTRICAL-MECHANICAL-WATER AND WASTEWATER DESIGN

BRIDGE NO. 17M5717
POST MILE

NEVADA CITY MAINTENANCE STATION
RESIDENT MECHANIC'S FACILITY
HVAC PLAN

SHEET **M1-1**

DOES SD Imperial Rev. 9/02

ORIGINAL SCALE IN INCHES FOR REDUCED PLANS 0 1 2 3

CU 03225
EA 318001

DISREGARD PRINTS BEARING EARLIER REVISION DATES →

REVISION DATES (PRELIMINARY STAGE ONLY) 3/30/07 6/19/07 8/29/07 11/16/07 02/16/08 05/23/08 07/09/08 10/24/08

SHEET OF

20-JAN-2010 14:07

m1_01.dgn

DIST.	COUNTY	ROUTE	POST MILES TOTAL PROJECT	SHEET NO.	TOTAL SHEETS
03	Nev	5717		76	106

REGISTERED MECHANICAL ENGINEER 10-27-08 DATE

REGISTERED PROFESSIONAL ENGINEER Jack Wheeler No. 21648 Exp. 6-30-09 MECH STATE OF CALIFORNIA

1-26-09
PLANS APPROVAL DATE

The State of California or its officers or agents shall not be responsible for the accuracy or completeness of electronic copies of this plan sheet.

ACCESSIBILITY DESIGN APPROVAL STAMP
DOT / DES / OTA
03-318001
DISTRICT - EA
Reviewed by: YA WANG
Date: 10-27-08

CALIFORNIA STATE FIRE MARSHAL
APPROVED
Approval of this plan does not authorize or approve any omission or deviation from applicable regulations. Final approval is subject to field inspection. One set of approved plans shall be available on the project site at all times.
Reviewed by: JEFFREY SCHWARTZ
Approval date: 1/11/10

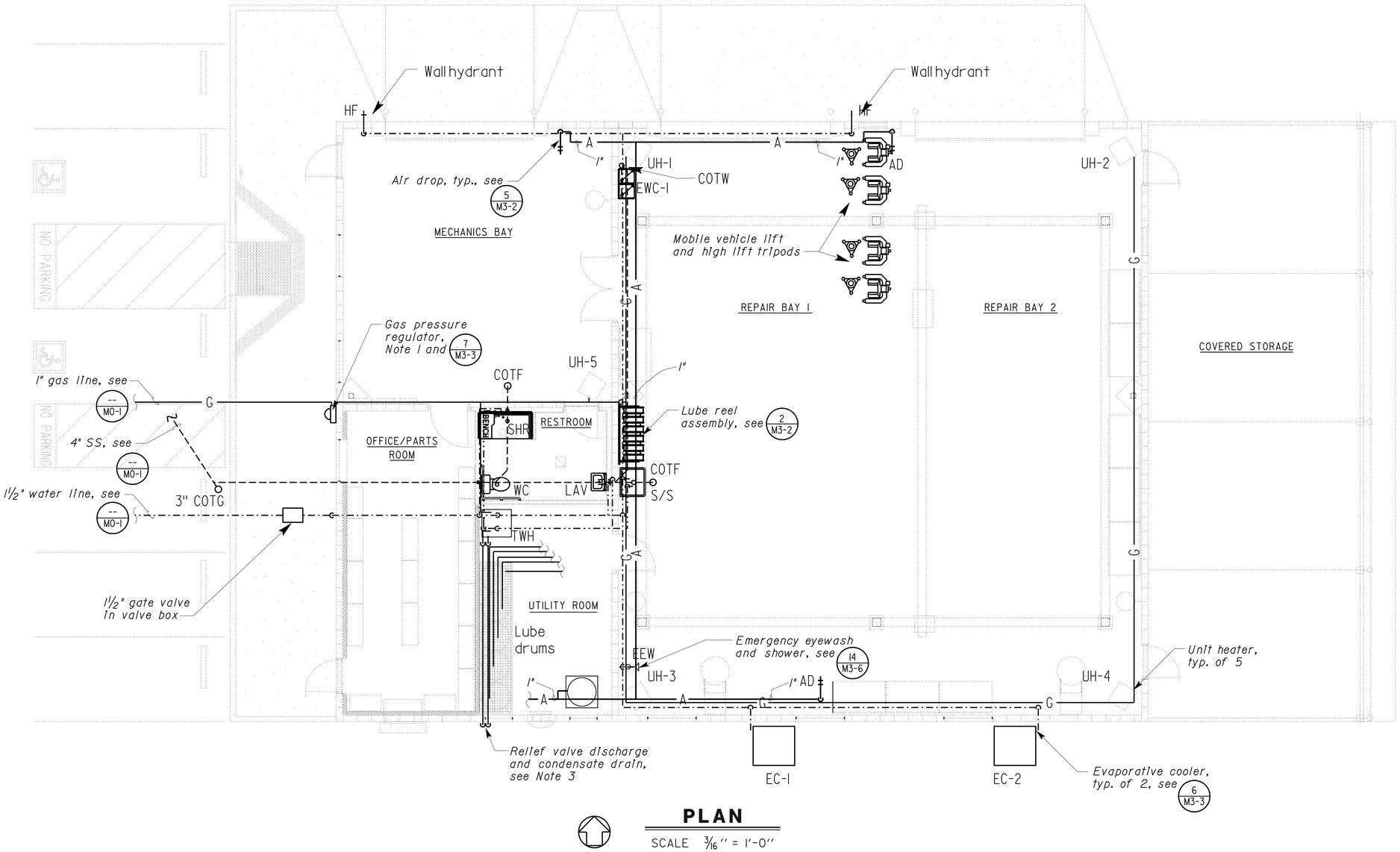

PLAN

SCALE 3/16" = 1'-0"

Notes:

1. *Gas pressure regulator shall have a 500 cubic feet per hour capacity, 5 psi inlet pressure and 11 inches w.c. outlet pressure.*
2. *Install flexible connectors and shutoff valves.*
3. *Route ¾" relief valve line and condensate line from waterheater to outside w/elbow down 6" above grade.*
4. *See sheet M3-0 for equipment schedule.*

(THIS SHEET ACCURATE FOR MECHANICAL WORK ONLY)

	BY	CHECKED
DESIGN	W. Thomas Hughes	Thomas Dietsch
DETAILS	W. Thomas Hughes	Thomas Dietsch
QUANTITIES	W. Thomas Hughes	Thomas Dietsch

STATE OF CALIFORNIA
DEPARTMENT OF TRANSPORTATION

DIVISION OF ENGINEERING SERVICES
ELECTRICAL-MECHANICAL-WATER AND WASTEWATER DESIGN

BRIDGE NO. 17M5717
POST MILE

NEVADA CITY MAINTENANCE STATION RESIDENT MECHANIC'S FACILITY

PLUMBING PLAN

SHEET **M1-2**

DOES SD Imperial Rev. 9/02

ORIGINAL SCALE IN INCHES FOR REDUCED PLANS 0 1 2 3

CU 03225
EA 318001

DISREGARD PRINTS BEARING EARLIER REVISION DATES → 3/30/07 6/19/07 8/29/07 11/16/07 02/19/08 05/23/08 07/09/08 10/24/08

REVISION DATES (PRELIMINARY STAGE ONLY) SHEET OF

20-JAN-2010 14:07

m1_02.dgn

DIST.	COUNTY	ROUTE	POST MILES TOTAL PROJECT	SHEET NO.	TOTAL SHEETS
03	Nev	5717		77	106

ACCESSIBILITY DESIGN APPROVAL STAMP
DOT / DES / OTA
03-318001
DISTRICT - EA
Reviewed by: YA WANG
Date: 10-27-08

CALIFORNIA STATE FIRE MARSHAL
APPROVED
Approval of this plan does not authorize or approve any omission or deviation from applicable regulations. Final approval is subject to field inspection. One set of approved plans shall be available on the project site at all times.
Reviewed by: JEFFREY SCHWARTZ
Approval date: 1/11/10

REGISTERED MECHANICAL ENGINEER — 10-27-08 DATE

REGISTERED PROFESSIONAL ENGINEER
Jack Wheeler
No. 21648
Exp. 6-30-09
MECH
STATE OF CALIFORNIA

1-26-09
PLANS APPROVAL DATE

The State of California or its officers or agents shall not be responsible for the accuracy or completeness of electronic copies of this plan sheet.

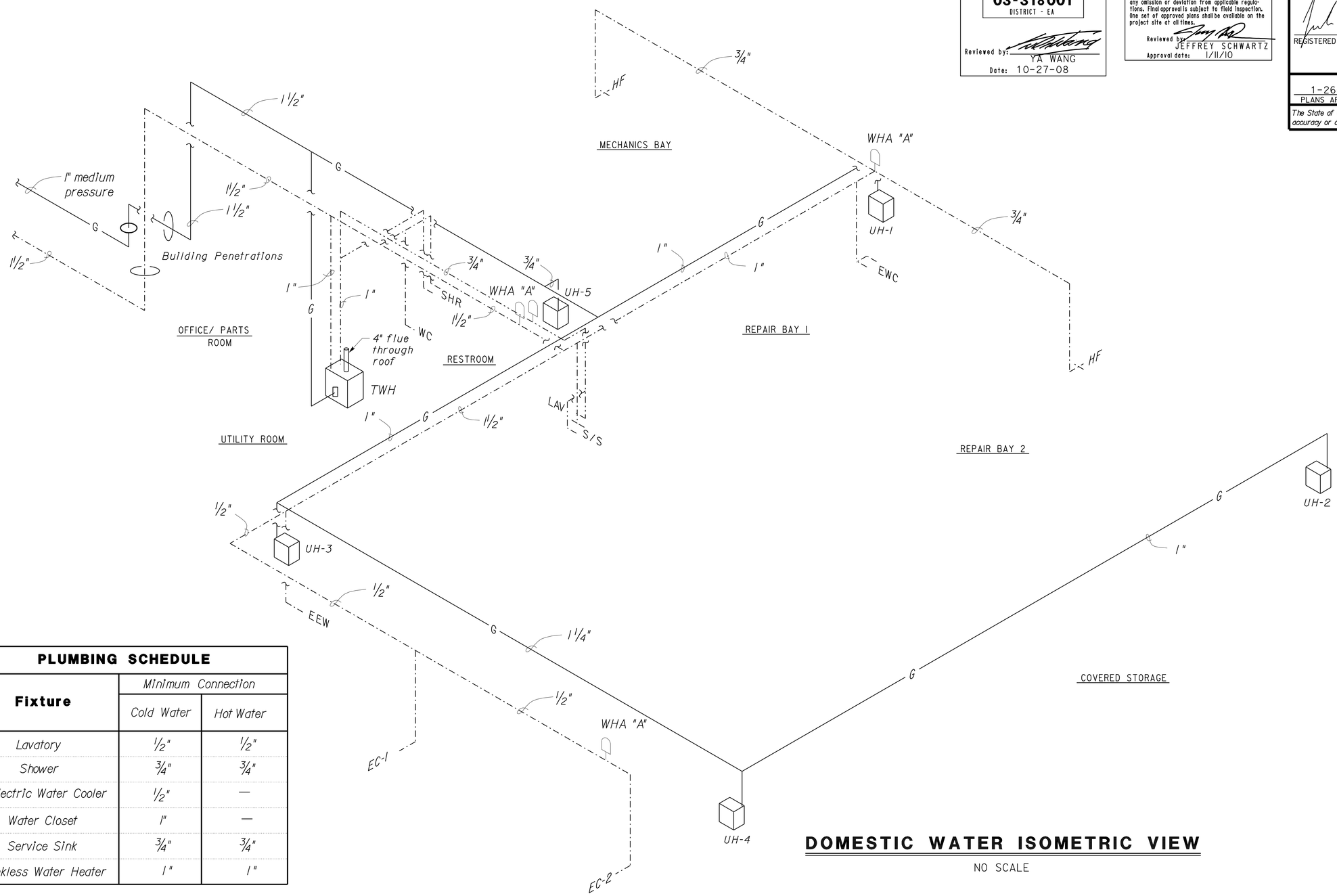

DOMESTIC WATER ISOMETRIC VIEW

NO SCALE

PLUMBING SCHEDULE

Fixture	Minimum Connection	
	Cold Water	Hot Water
Lavatory	½"	½"
Shower	¾"	¾"
Electric Water Cooler	½"	—
Water Closet	1"	—
Service Sink	¾"	¾"
Tankless Water Heater	1"	1"

(THIS SHEET ACCURATE FOR MECHANICAL WORK ONLY)

	BY	CHECKED
DESIGN	W. Thomas Hughes	Thomas Dietsch
DETAILS	W. Thomas Hughes	Thomas Dietsch
QUANTITIES	W. Thomas Hughes	Thomas Dietsch

STATE OF CALIFORNIA
DEPARTMENT OF TRANSPORTATION

DIVISION OF ENGINEERING SERVICES
ELECTRICAL-MECHANICAL-WATER AND WASTEWATER DESIGN

BRIDGE NO. 17M5717
POST MILE

NEVADA CITY MAINTENANCE STATION RESIDENT MECHANIC'S FACILITY

DOMESTIC WATER ISOMETRIC

SHEET **M1-3**

DOES SD Imperial Rev. 9/02

ORIGINAL SCALE IN INCHES FOR REDUCED PLANS 0 1 2 3

CU 03225
EA 318001

DISREGARD PRINTS BEARING EARLIER REVISION DATES → 3/30/07 6/19/07 8/29/07 11/16/07 02/08/08 05/23/08 07/09/08 10/24/08

REVISION DATES (PRELIMINARY STAGE ONLY) SHEET OF

20-JAN-2010 14:07

m1_03.dgn

DIST.	COUNTY	ROUTE	POST MILES TOTAL PROJECT	SHEET NO.	TOTAL SHEETS
03	Nev	5717		78	106

REGISTERED MECHANICAL ENGINEER 10-27-08 DATE

REGISTERED PROFESSIONAL ENGINEER Jack Wheeler No. 21648 Exp. 6-30-09 MECH STATE OF CALIFORNIA

1-26-09
PLANS APPROVAL DATE

The State of California or its officers or agents shall not be responsible for the accuracy or completeness of electronic copies of this plan sheet.

ACCESSIBILITY DESIGN APPROVAL STAMP
DOT / DES / OTA
03-318001
DISTRICT - EA
Reviewed by: YA WANG
Date: 10-27-08

CALIFORNIA STATE FIRE MARSHAL
APPROVED
Approval of this plan does not authorize or approve any omission or deviation from applicable regulations. Final approval is subject to field inspection. One set of approved plans shall be available on the project site at all times.
Reviewed by: JEFFREY SCHWARTZ
Approval date: 1/11/10

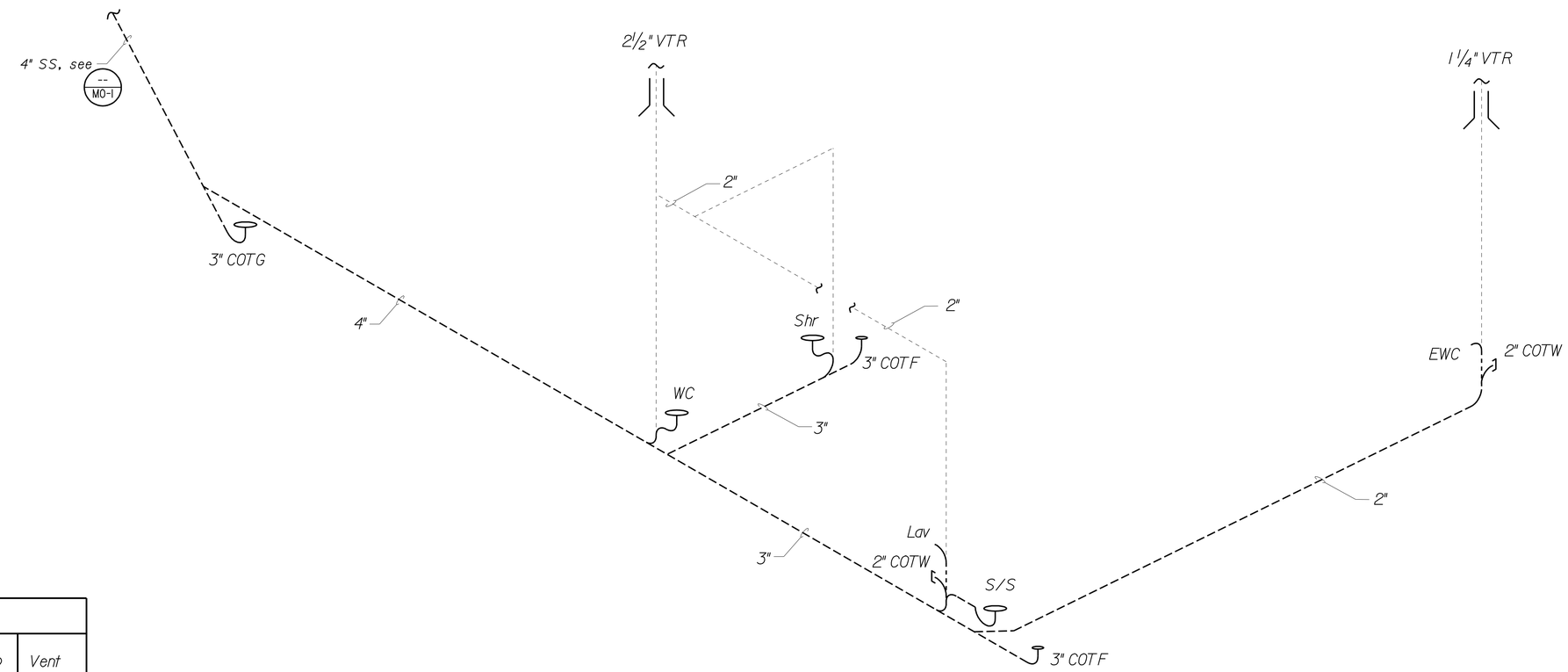

SANITARY SEWER ISOMETRIC VIEW

NO SCALE

PLUMBING SCHEDULE

Fixture	Drainage Rough-in	Trap	Vent
Lavatory	2"	1¼"	1¼"
Electric Water Cooler	2"	1¼"	1¼"
Shower	2"	2"	1½"
Water Closet	3"	--	1½"
Floor Drain	2"	2"	1½"
Service Sink	3"	3"	1½"

(THIS SHEET ACCURATE FOR MECHANICAL WORK ONLY)

	BY	CHECKED
DESIGN	W. Thomas Hughes	Thomas Dietsch
DETAILS	W. Thomas Hughes	Thomas Dietsch
QUANTITIES	W. Thomas Hughes	Thomas Dietsch

STATE OF CALIFORNIA
DEPARTMENT OF TRANSPORTATION

DIVISION OF ENGINEERING SERVICES
ELECTRICAL-MECHANICAL-WATER AND WASTEWATER DESIGN

BRIDGE NO. 17M5717
POST MILE

NEVADA CITY MAINTENANCE STATION RESIDENT MECHANIC'S FACILITY

SANITARY SEWER ISOMETRIC

SHEET **M1-4**

DOES SD Imperial Rev. 9/02

ORIGINAL SCALE IN INCHES FOR REDUCED PLANS 0 1 2 3

CU 03225
EA 318001

DISREGARD PRINTS BEARING EARLIER REVISION DATES → 3/30/07 6/19/07 8/29/07 11/06/07 02/06/08 05/23/08 07/09/08 10/24/08

REVISION DATES (PRELIMINARY STAGE ONLY) SHEET OF

20-JAN-2010 14:08

m1_04.dgn

DIST.	COUNTY	ROUTE	POST MILES TOTAL PROJECT	SHEET NO.	TOTAL SHEETS
03	Nev	5717		79	106

ACCESSIBILITY DESIGN APPROVAL STAMP
DOT / DES / OTA
03-318001
DISTRICT - EA
Reviewed by: YA WANG
Date: 10-27-08

CALIFORNIA STATE FIRE MARSHAL
APPROVED
Approval of this plan does not authorize or approve any omission or deviation from applicable regulations. Final approval is subject to field inspection. One set of approved plans shall be available on the project site at all times.
Reviewed by: JEFFREY SCHWARTZ
Approval date: 1/11/10

REGISTERED MECHANICAL ENGINEER 10-27-08 DATE
REGISTERED PROFESSIONAL ENGINEER Jack Wheeler No. 21648 Exp. 6-30-09 MECH STATE OF CALIFORNIA
1-26-09
PLANS APPROVAL DATE

The State of California or its officers or agents shall not be responsible for the accuracy or completeness of electronic copies of this plan sheet.

General Note:

All equipment shall comply with 2005 building Energy Efficiency Standards; Title 24.

SYMBOL	DESCRIPTION
AC-1	AIR COMPRESSOR: Quantity = 1 Capacity : 175 PSI @ 17.1 CFM free air delivery, 80 Gallon vertical tank, Unit Electrical : 5 HP, 208 V - 3 Ph - 60Hz
DEF-1 DEF-2	DECLASSIFICATION EXHAUST FAN : Weight = 85 lbs. Quantity = 2 Air : 2350 CFM @ .25 in. wg E.S.P., 14.7 sones max. Unit Electrical : 0.5 Hp, 208 V - 1 Ph - 60Hz Provide local disconnect at exhaust fan, and motorized damper. Fan and damper shall be controlled by wall mounted on-off switch.
EC-1 EC-2	EVAPORATIVE COOLER: Weight = 500 lbs. Quantity = 2 Air : 5200 CFM @ 0.1 in wg E.S.P Unit Electrical : .75 Hp, 208 V - 3 Ph - 60Hz Pump Electrical : 1/35 Hp. 120 V - 1 Ph - 60Hz Evaporative cooler shall be wall discharge unit and controlled by a wall mounted selective switch.
EEF-1 EEF-2	EXHAUST EVACUATION HOSE REEL AND FAN : Quantity = 2 Air : 600 CFM.@ 4.5 in wg. Weight = 600 lbs. Unit Electrical : 1.5 Hp, 208 V - 3 Ph - 60Hz Hose length and diameter: 33' X 6" Fan and hose reel shall be controlled by a remote operated 3 button (on-off, up, down) control station on wall.
EF-1	EXHAUST FAN : Quantity = 1 Air : 50 CFM @ 0.25 in w.c., 3.7 sones max. Unit Electrical : 50 watts, 120 V - 1 Ph - 60Hz
EF-2	EXHAUST FAN : Weight 45 lbs. Quantity = 1 Air : 300 CFM @ 0.10 in wg S.P., 3.7 sones max. Unit Electrical : 0.23 Hp, 120 V - 1 Ph - 60Hz Duct thru wall add wall cap, birdscreen and w/barometeric relief damper w/local disconnect.
EWC-1	DUAL HEIGHT ELECTRIC WATER COOLER: Quantity = 1 Water: 8 GPM @ 80°F inlet, 50°F outlet at 90°F ambient room temperature. Unit Electrical : 460 Watts, 120V-1PH-60HZ

SYMBOL	DESCRIPTION
TWH	TANKLESS WATER HEATER : Quantity = 1 Capacity : 125,000 BTU/hour Temp Rises : 64 F @ 2.0 GPM 51 F @ 2.5 GPM Unit Input : 1.2 Amps nominal input, 120 V, 1Ph - 60Hz
FEF	FUME EXHAUST FAN : Weight = 85 lbs. Quantity = 1 Air : 2500 CFM @ .25 in. wg E.S.P., 14.7 sones max. Unit Electrical : 0.5 Hp, 208 V - 1 Ph - 60Hz Provide local disconnect at exhaust fan, and motorized damper. Fan and damper shall be controlled by wall mounted on-off switch.
HLV	COMBINATION HEAT/ LIGHT CEILING EXHAUST FAN : Quantity = 1 Air : 70 CFM @ 0.12 in wg. E.S.P., 4.0 sones max. Unit Electrical : 1.5 kW, 120 V - 1 Ph - 60Hz, Route 100 mm dia. duct to roof cap. Provide backdraft damper and birdscreen. Switch unit on with timer control. One 1500 watts element and One 100 watts Incandecent bulb, the fan and infrared bulb shall all be controlled by separate switches.
	PACKAGED TERMINAL HEAT PUMP WT = 150 lbs, Quantity = 1 Cooling Capacity : Nominal 12,000 Btuh Heating Capacity : Nominal 11,000 Btuh reverse cycle 4.0 kW electric heat Unit Electrical : 208 V- 1Ph - 60Hz, 22.5 Amps
UH-1 THRU UH-5	UNIT HEATER : Weight = 210 lbs Quantity = 5 Min. Output capacity : 50,000 BTUh natural gas Blower Capacity : 650 CFM @ 0 in wg. E.S.P. Unit Electrical : 1/35 Hp, 120 V - 1 Ph - 60Hz Unit heater shall be controlled by wall mounted thermostats and time switch. NOTE: Flue thru roof

SYMBOL	DESCRIPTION
BC-1	BRIDGE CRANE/ HOIST & TROLLEY : Quantity = 1 Crane capacity/ Electrical : 3.0 Ton, motor driven crane, 1.0 HP, 208 V -3Ph - 60HZ Hoist & Trolley capacity/ Electrical : 2,700 kg, motor driven trolley and hoist 3.0 HP hoist motor, 208 V - 3 Ph - 60 HZ 0.5 HP trolley motor, 208 V - 3 Ph - 60Hz Bridge crane, trolley and hoist shall be operated by hand held pendent control.
	MOBILE VEHICLE LIFT Quantity = 4 posts Lift capacity/ Electrical : 15,000 lbs per post, 2.0 HP, 208 V -3Ph - 60HZ (4 total)

(THIS SHEET ACCURATE FOR MECHANICAL WORK ONLY)

	BY	CHECKED
DESIGN	W. Thomas Hughes	Thomas Dietsch
DETAILS	W. Thomas Hughes	Thomas Dietsch
QUANTITIES	W. Thomas Hughes	Thomas Dietsch

STATE OF CALIFORNIA
DEPARTMENT OF TRANSPORTATION

DIVISION OF ENGINEERING SERVICES
ELECTRICAL-MECHANICAL-WATER AND WASTEWATER DESIGN

BRIDGE NO. 17M5717
POST MILE

NEVADA CITY MAINTENANCE STATION
RESIDENT MECHANIC'S FACILITY
EQUIPMENT SCHEDULE

SHEET M3-0

DOES SD Imperial Rev. 9/02

ORIGINAL SCALE IN INCHES FOR REDUCED PLANS 0 1 2 3

CU 03225
EA 318001

DISREGARD PRINTS BEARING EARLIER REVISION DATES → REVISION DATES (PRELIMINARY STAGE ONLY) 3/30/07 6/19/07 8/29/07 11/16/07 02/16/08 05/23/08 07/09/08 10/24/08

SHEET OF

20-JAN-2010 14:08

m3_0.dgn

DIST.	COUNTY	ROUTE	POST MILES TOTAL PROJECT	SHEET NO.	TOTAL SHEETS
03	Nev	5717		80	106

REGISTERED MECHANICAL ENGINEER — 10-27-08 DATE

REGISTERED PROFESSIONAL ENGINEER — Jack Wheeler — No. 21648 — Exp. 6-30-09 — MECH — STATE OF CALIFORNIA

1-26-09
PLANS APPROVAL DATE

The State of California or its officers or agents shall not be responsible for the accuracy or completeness of electronic copies of this plan sheet.

ACCESSIBILITY DESIGN APPROVAL STAMP
DOT / DES / OTA
03-318001
DISTRICT - EA
Reviewed by: YA WANG
Date: 10-27-08

CALIFORNIA STATE FIRE MARSHAL APPROVED
Approval of this plan does not authorize or approve any omission or deviation from applicable regulations. Final approval is subject to field inspection. One set of approved plans shall be available on the project site at all times.
Reviewed by: JEFFREY SCHWARTZ
Approval date: 1/11/10

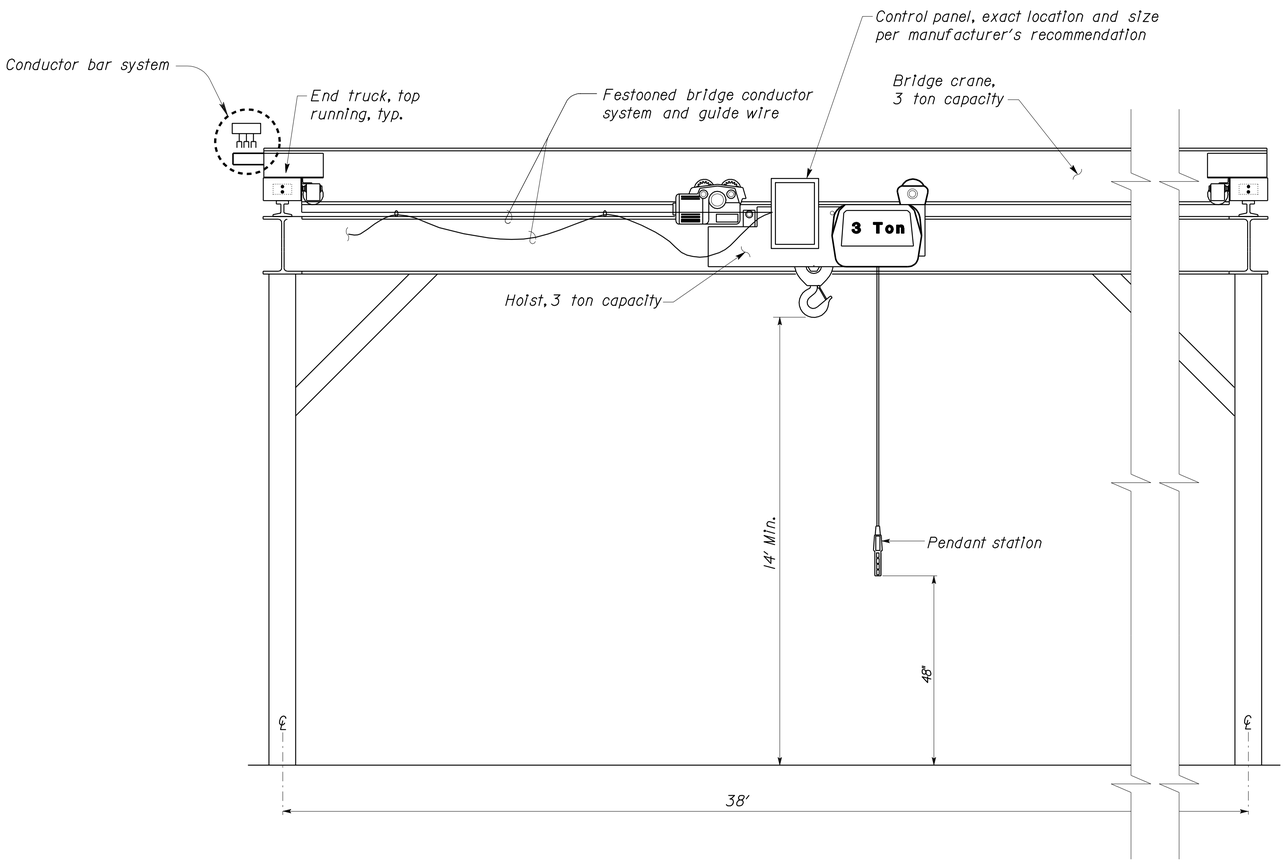

1 FREESTANDING BRIDGE CRANE AND HOIST

No Scale

(THIS SHEET ACCURATE FOR MECHANICAL WORK ONLY)

	BY	CHECKED
DESIGN	W. Thomas Hughes	Thomas Dietsch
DETAILS	W. Thomas Hughes	Thomas Dietsch
QUANTITIES	W. Thomas Hughes	Thomas Dietsch

STATE OF CALIFORNIA
DEPARTMENT OF TRANSPORTATION

DIVISION OF ENGINEERING SERVICES
ELECTRICAL-MECHANICAL-WATER AND WASTEWATER DESIGN

BRIDGE NO. 17M5717
POST MILE

NEVADA CITY MAINTENANCE STATION
RESIDENT MECHANIC'S FACILITY
CRANE DETAILS

SHEET **M3-1**

DOES SD Imperial Rev. 9/02

ORIGINAL SCALE IN INCHES FOR REDUCED PLANS 0 1 2 3

CU 03225
EA 318001

DISREGARD PRINTS BEARING EARLIER REVISION DATES → REVISION DATES (PRELIMINARY STAGE ONLY) 3/30/07 6/19/07 8/29/07 11/16/07 02/19/08 05/23/08 07/09/08 10/24/08 SHEET OF

20-JAN-2010 14:08

m3_1.dgn

DIST.	COUNTY	ROUTE	POST MILES TOTAL PROJECT	SHEET NO.	TOTAL SHEETS
03	Nev	5717		81	106

ACCESSIBILITY DESIGN APPROVAL STAMP
DOT / DES / OTA
03-318001
DISTRICT - EA
Reviewed by: YA WANG
Date: 10-27-08

CALIFORNIA STATE FIRE MARSHAL
APPROVED
Approval of this plan does not authorize or approve any omission or deviation from applicable regulations. Final approval is subject to field inspection. One set of approved plans shall be available on the project site at all times.
Reviewed by: JEFFREY SCHWARTZ
Approval date: 1/11/10

REGISTERED MECHANICAL ENGINEER — 10-27-08 DATE

REGISTERED PROFESSIONAL ENGINEER — Jack Wheeler — No. 21648 — Exp. 6-30-09 — MECH — STATE OF CALIFORNIA

1-26-09
PLANS APPROVAL DATE

The State of California or its officers or agents shall not be responsible for the accuracy or completeness of electronic copies of this plan sheet.

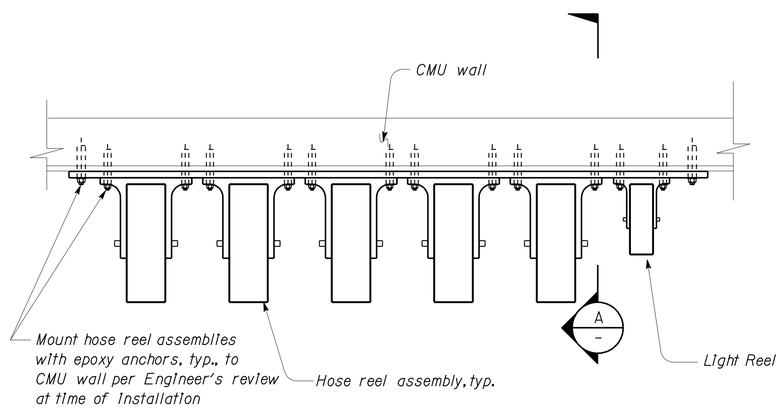

2 HOSE REEL ASSEMBLIES PLAN

No Scale

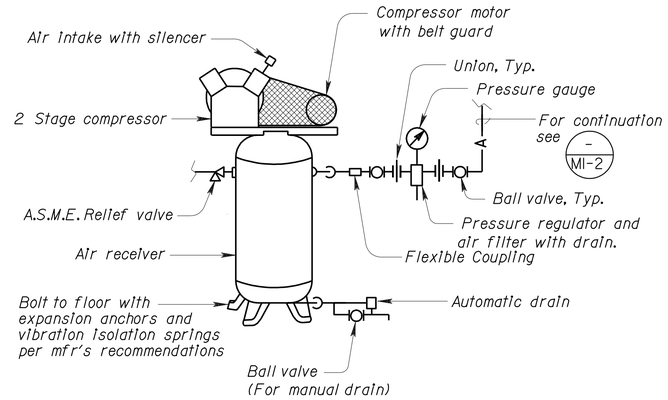

3 AIR COMPRESSOR

No Scale

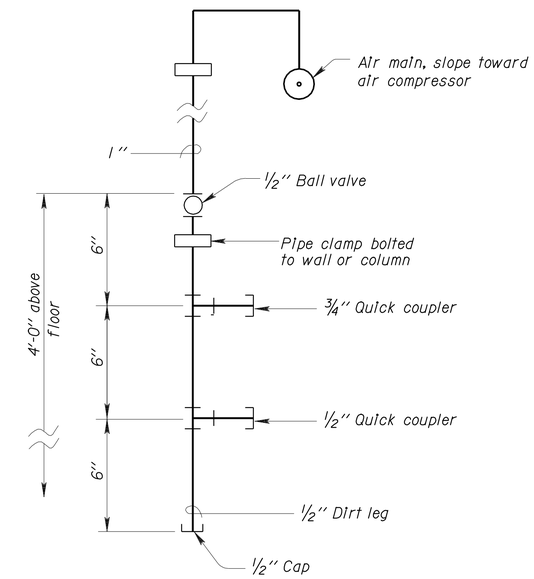

5 AIR DROP

No Scale

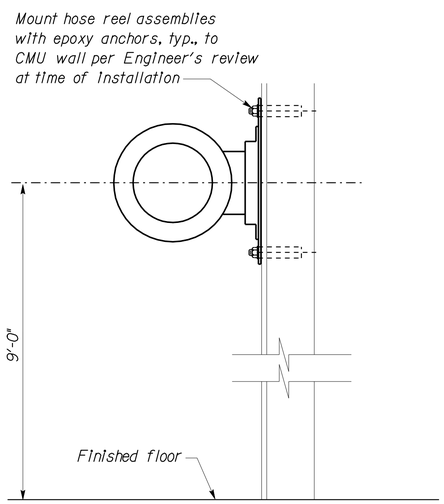

A HOSE REEL ASSEMBLIES SECTION

No Scale

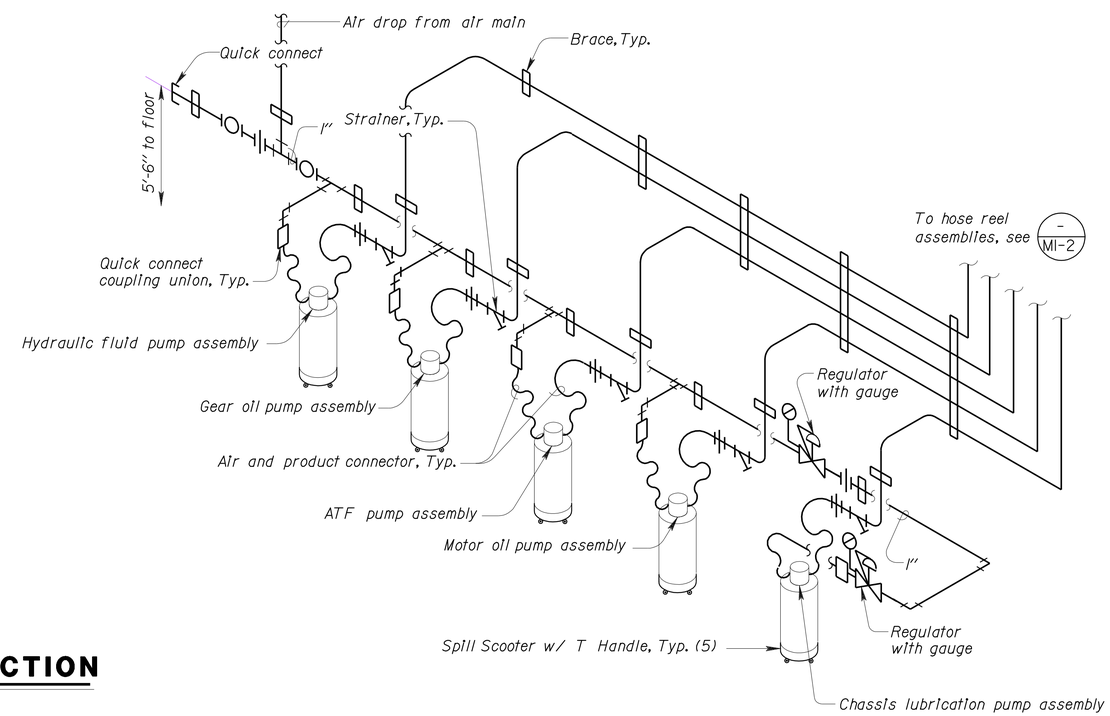

4 LUBE DRUM AND PIPING DIAGRAM

No Scale

Note: Drums and product will be State furnished. Install spill scooter under each drum.

(THIS SHEET ACCURATE FOR MECHANICAL WORK ONLY)

DESIGN	BY W. Thomas Hughes	CHECKED Thomas Dietsch	
DETAILS	BY W. Thomas Hughes	CHECKED Thomas Dietsch	
QUANTITIES	BY W. Thomas Hughes	CHECKED Thomas Dietsch	

STATE OF CALIFORNIA
DEPARTMENT OF TRANSPORTATION

DIVISION OF ENGINEERING SERVICES
ELECTRICAL-MECHANICAL-WATER AND WASTEWATER DESIGN

BRIDGE NO. 17M5717
POST MILE

NEVADA CITY MAINTENANCE STATION RESIDENT MECHANIC'S FACILITY

AIR & LUBRICATION SYSTEM

SHEET **M3-2**

DOES SD Imperial Rev. 9/02

ORIGINAL SCALE IN INCHES FOR REDUCED PLANS 0 1 2 3

CU 03225
EA 318001

DISREGARD PRINTS BEARING EARLIER REVISION DATES → 3/30/07 6/19/07 8/29/07 11/16/07 02/16/08 05/23/08 07/09/08 10/24/08

REVISION DATES (PRELIMINARY STAGE ONLY) SHEET OF

21-JAN-2010 06:08

m3_2.dgn

DIST.	COUNTY	ROUTE	POST MILES TOTAL PROJECT	SHEET NO.	TOTAL SHEETS
03	Nev	5717		82	106

REGISTERED MECHANICAL ENGINEER — 10-27-08 DATE

REGISTERED PROFESSIONAL ENGINEER Jack Wheeler No. 21648 Exp. 6-30-09 MECH STATE OF CALIFORNIA

1-26-09
PLANS APPROVAL DATE

The State of California or its officers or agents shall not be responsible for the accuracy or completeness of electronic copies of this plan sheet.

ACCESSIBILITY DESIGN APPROVAL STAMP
DOT / DES / OTA
03-318001
DISTRICT - EA
Reviewed by: YA WANG
Date: 10-27-08

CALIFORNIA STATE FIRE MARSHAL APPROVED
Approval of this plan does not authorize or approve any omission or deviation from applicable regulations. Final approval is subject to field inspection. One set of approved plans shall be available on the project site at all times.
Reviewed by: JEFFREY SCHWARTZ
Approval date: 1/11/10

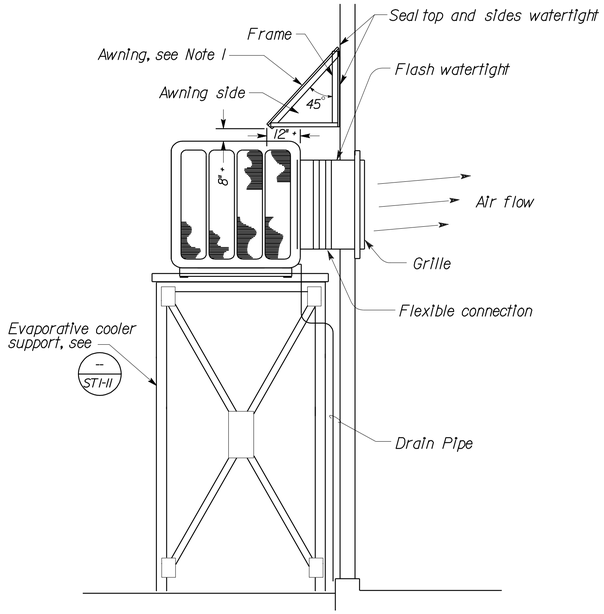

6 EVAPORATIVE COOLER

No Scale

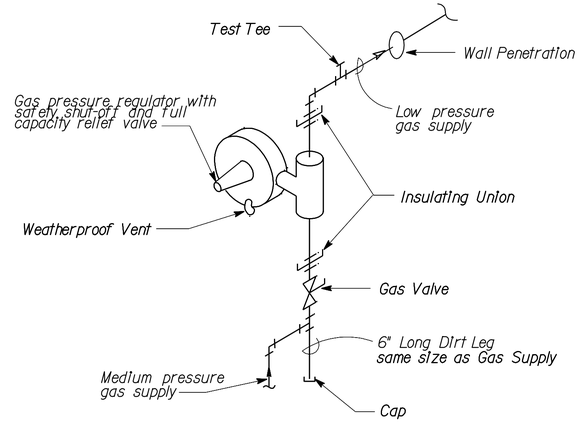

7 GAS PRESSURE REGULATOR

No Scale

Notes:

1 Awning frame shall be 2" x 2" x 1/4" steel angle, all welded construction. Awning top and sides shall be 12 gauge steel plate, attached to awning frame with sheet metal screws at 3" O.C. Awning shall be fastened to structure with 3/8" expansion anchors at 6" O.C. Awning width shall equal evaporative cooler width. Awning shall be primed and painted to match building louvers, see Architectural sheets.

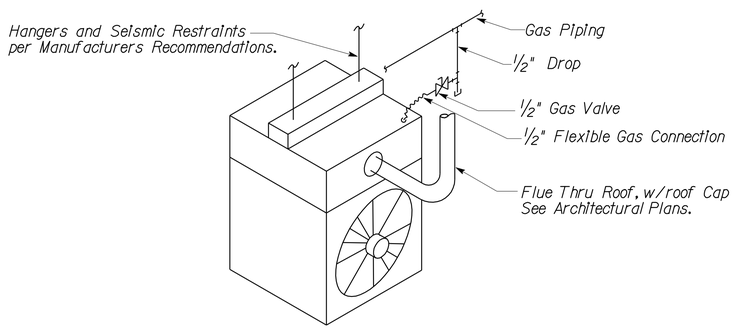

8 UNIT HEATER (GAS) DETAIL

No Scale

Note : Mount unit heater bottom 10'-0" + above finish floor.

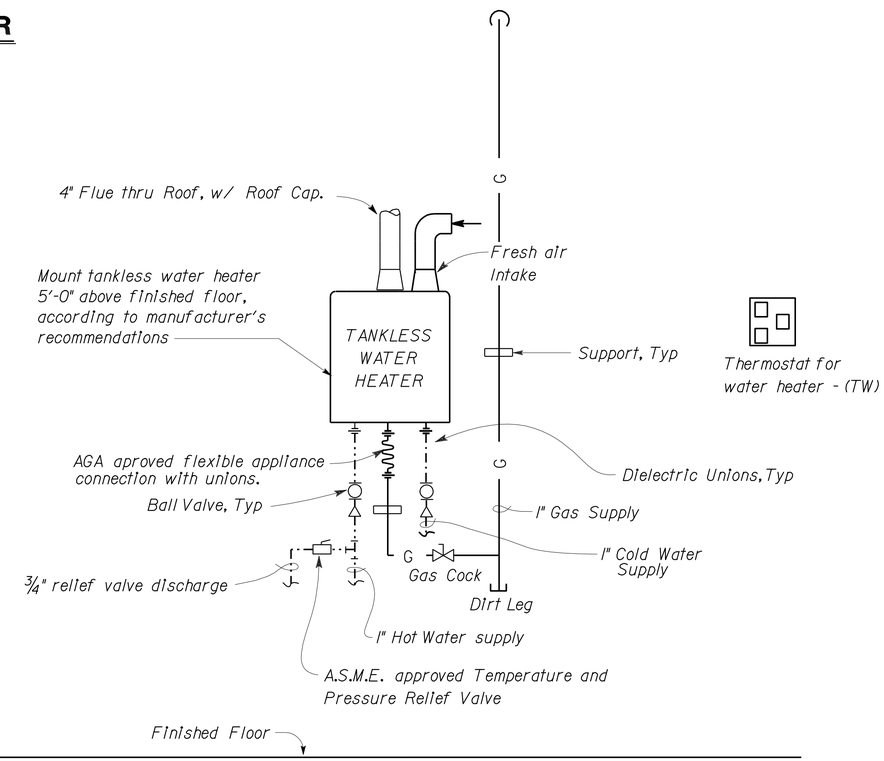

9 TANKLESS WATER HEATER (GAS)

No Scale

(THIS SHEET ACCURATE FOR MECHANICAL WORK ONLY)

	BY	CHECKED
DESIGN	W. Thomas Hughes	Thomas Dietsch
DETAILS	W. Thomas Hughes	Thomas Dietsch
QUANTITIES	W. Thomas Hughes	Thomas Dietsch

STATE OF CALIFORNIA
DEPARTMENT OF TRANSPORTATION

DIVISION OF ENGINEERING SERVICES
ELECTRICAL-MECHANICAL-WATER AND WASTEWATER DESIGN

BRIDGE NO. 17M5717
POST MILE

NEVADA CITY MAINTENANCE STATION RESIDENT MECHANIC'S FACILITY

MISCELLANEOUS DETAILS 1

SHEET **M3-3**

DOES SD Imperial Rev. 9/02

ORIGINAL SCALE IN INCHES FOR REDUCED PLANS 0 1 2 3

CU 03225
EA 318001

DISREGARD PRINTS BEARING EARLIER REVISION DATES → REVISION DATES (PRELIMINARY STAGE ONLY) 3/30/07 5/19/07 8/29/07 11/16/07 02/16/08 05/23/08 07/09/08 10/24/08 SHEET OF

21-JAN-2010 06:11

m3_3.dgn

DIST.	COUNTY	ROUTE	POST MILES TOTAL PROJECT	SHEET NO.	TOTAL SHEETS
03	Nev	5717		83	106

REGISTERED MECHANICAL ENGINEER — 10-27-08 DATE

REGISTERED PROFESSIONAL ENGINEER Jack Wheeler No. 21648 Exp. 6-30-09 MECH STATE OF CALIFORNIA

1-26-09
PLANS APPROVAL DATE

The State of California or its officers or agents shall not be responsible for the accuracy or completeness of electronic copies of this plan sheet.

ACCESSIBILITY DESIGN APPROVAL STAMP
DOT / DES / OTA
03-318001
DISTRICT - EA
Reviewed by: YA WANG
Date: 10-27-08

CALIFORNIA STATE FIRE MARSHAL APPROVED
Approval of this plan does not authorize or approve any omission or deviation from applicable regulations. Final approval is subject to field inspection. One set of approved plans shall be available on the project site at all times.
Reviewed by: JEFFREY SCHWARTZ
Approval date: 1/11/10

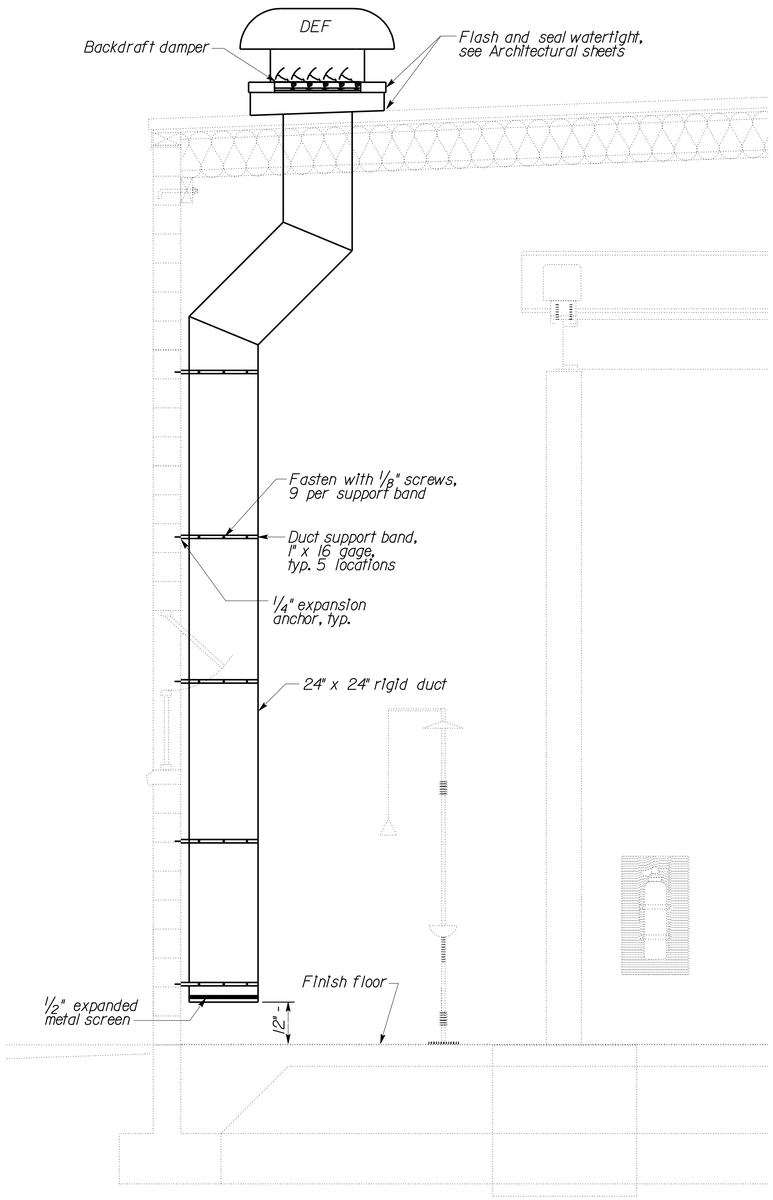

10 DECLASSIFICATION FAN SECTION

No Scale

Notes:

1. *Awning frame shall be 2" x 2" x 1/4" steel angle, all welded construction. Awning top and sides shall be 12 gauge steel plate, attached to awning frame with sheet metal screws at 3" O.C. Awning shall be fastened to structure with 3/8" expansion anchors at 6" O.C. Awning shall be primed and painted to match building louvers, see Architectural sheets.*

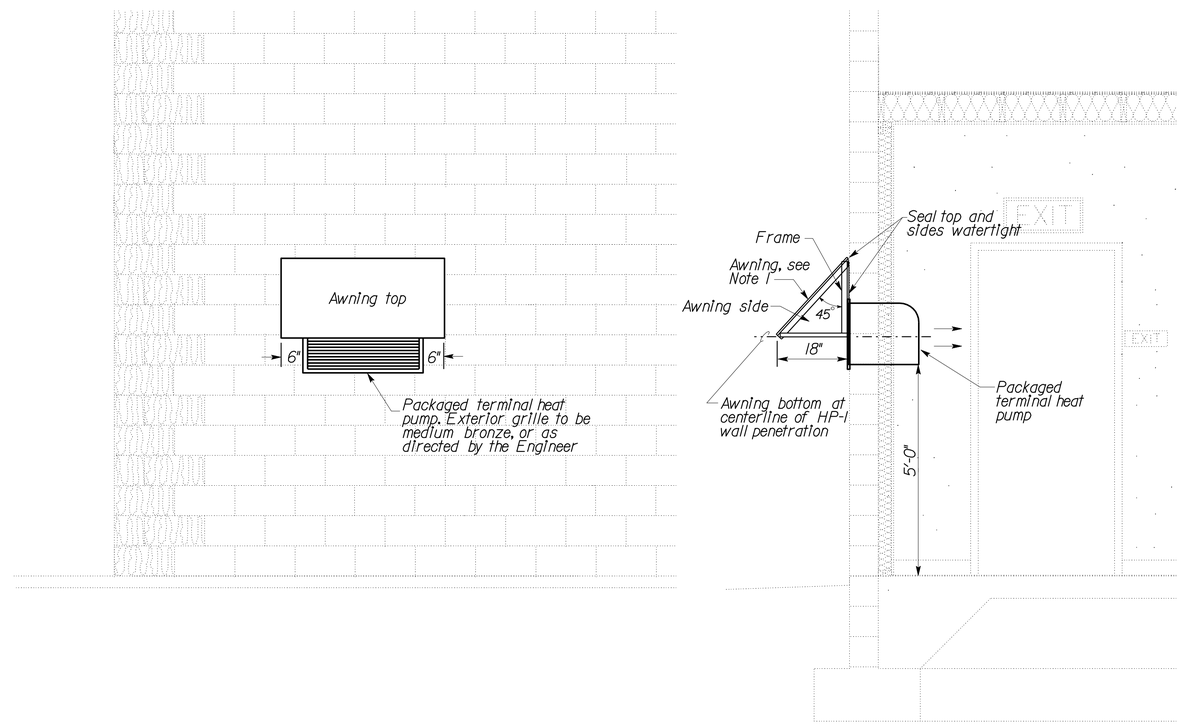

11 HEAT PUMP DETAILS

No Scale

(THIS SHEET ACCURATE FOR MECHANICAL WORK ONLY)

	BY	CHECKED
DESIGN	W. Thomas Hughes	Thomas Dietsch
DETAILS	W. Thomas Hughes	Thomas Dietsch
QUANTITIES	W. Thomas Hughes	Thomas Dietsch

STATE OF CALIFORNIA
DEPARTMENT OF TRANSPORTATION

DIVISION OF ENGINEERING SERVICES
ELECTRICAL-MECHANICAL-WATER AND WASTEWATER DESIGN

BRIDGE NO. 17M5717
POST MILE

NEVADA CITY MAINTENANCE STATION RESIDENT MECHANIC'S FACILITY

MISCELLANEOUS DETAILS 2

SHEET **M3-4**

DOES SD Imperial Rev. 9/02

ORIGINAL SCALE IN INCHES FOR REDUCED PLANS 0 1 2 3

CU 03225
EA 318001

DISREGARD PRINTS BEARING EARLIER REVISION DATES → 3/30/07 6/19/07 8/29/07 11/16/07 02/19/08 05/23/08 07/09/08 10/24/08

REVISION DATES (PRELIMINARY STAGE ONLY) SHEET OF

20-JAN-2010 14:09

m3_4.dgn

DIST.	COUNTY	ROUTE	POST MILES TOTAL PROJECT	SHEET NO.	TOTAL SHEETS
03	Nev	5717		84	106

REGISTERED MECHANICAL ENGINEER 10-27-08 DATE

REGISTERED PROFESSIONAL ENGINEER Jack Wheeler No. 21648 Exp. 6-30-09 MECH STATE OF CALIFORNIA

1-26-09
PLANS APPROVAL DATE

The State of California or its officers or agents shall not be responsible for the accuracy or completeness of electronic copies of this plan sheet.

ACCESSIBILITY DESIGN APPROVAL STAMP
DOT / DES / OTA
03-318001
DISTRICT - EA
Reviewed by: YA WANG
Date: 10-27-08

CALIFORNIA STATE FIRE MARSHAL
APPROVED
Approval of this plan does not authorize or approve any omission or deviation from applicable regulations. Final approval is subject to field inspection. One set of approved plans shall be available on the project site at all times.
Reviewed by: JEFFREY SCHWARTZ
Approval date: 1/11/10

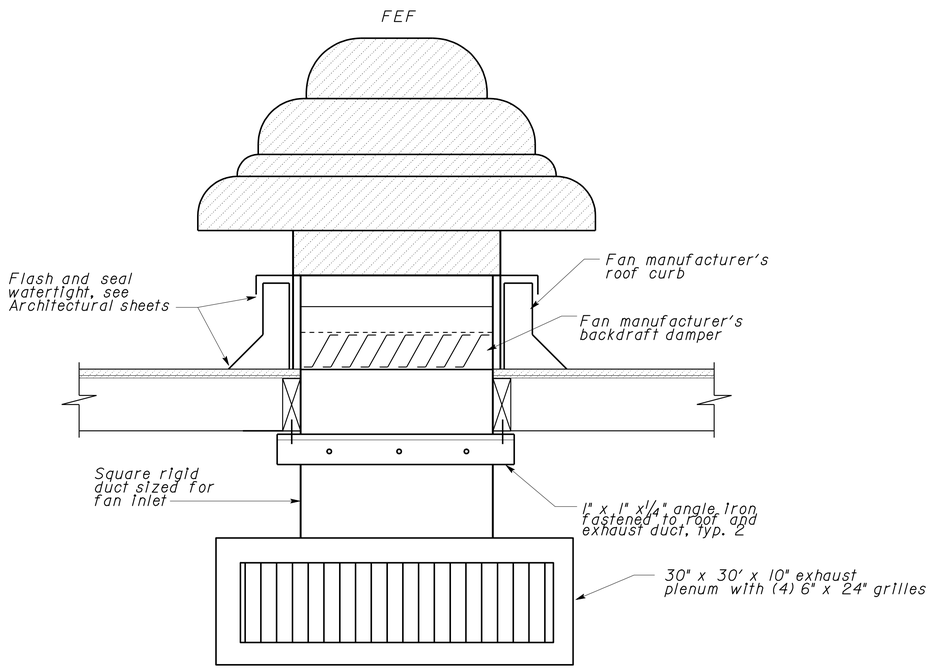

12 FUME EXHAUST FAN DETAIL

No Scale

REQUIRED THRUST BLOCK BEARING AREA- TOTAL SQUARE FEET

TYPE OF FITTING		90° BEND	45° BEND	11-1/4 BEND 22-1/2 BEND	TEE OR DEAD END
TYPICAL INSTALLATION		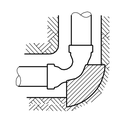	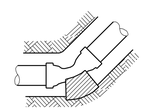	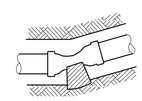	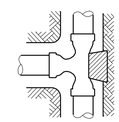
PIPE SIZE (in.)	4	2	1	1	2
	6	4.25	2	1	3.25
	8	7.5	4.25	2	5.5
	10	11	6.5	3.25	8.5

13 THRUST BLOCKS

No Scale

(THIS SHEET ACCURATE FOR MECHANICAL WORK ONLY)

	BY	CHECKED
DESIGN	W. Thomas Hughes	Thomas Dietsch
DETAILS	W. Thomas Hughes	Thomas Dietsch
QUANTITIES	W. Thomas Hughes	Thomas Dietsch

STATE OF CALIFORNIA
DEPARTMENT OF TRANSPORTATION

DIVISION OF ENGINEERING SERVICES
ELECTRICAL-MECHANICAL-WATER AND WASTEWATER DESIGN

BRIDGE NO. 17M5717
POST MILE

NEVADA CITY MAINTENANCE STATION RESIDENT MECHANIC'S FACILITY

MISCELLANEOUS DETAILS 3

SHEET **M3-5**

DOES SD Imperial Rev. 9/02

ORIGINAL SCALE IN INCHES FOR REDUCED PLANS 0 1 2 3

CU 03225
EA 318001

DISREGARD PRINTS BEARING EARLIER REVISION DATES → 3/30/07 6/19/07 8/29/07 11/16/07 02/16/08 05/23/08 07/09/08 10/24/08

REVISION DATES (PRELIMINARY STAGE ONLY) SHEET OF

21-JAN-2010 06:13

m3_5.dgn

DIST.	COUNTY	ROUTE	POST MILES TOTAL PROJECT	SHEET NO.	TOTAL SHEETS
03	Nev	5717		85	106

ACCESSIBILITY DESIGN APPROVAL STAMP
DOT / DES / OTA
03-318001
DISTRICT - EA
Reviewed by: YA WANG
Date: 10-27-08

CALIFORNIA STATE FIRE MARSHAL APPROVED
Approval of this plan does not authorize or approve any omission or deviation from applicable regulations. Final approval is subject to field inspection. One set of approved plans shall be available on the project site at all times.
Reviewed by: JEFFREY SCHWARTZ
Approval date: 1/11/10

REGISTERED MECHANICAL ENGINEER 10-27-08 DATE

REGISTERED PROFESSIONAL ENGINEER Jack Wheeler No. 21648 Exp. 6-30-09 MECH STATE OF CALIFORNIA

1-26-09
PLANS APPROVAL DATE

The State of California or its officers or agents shall not be responsible for the accuracy or completeness of electronic copies of this plan sheet.

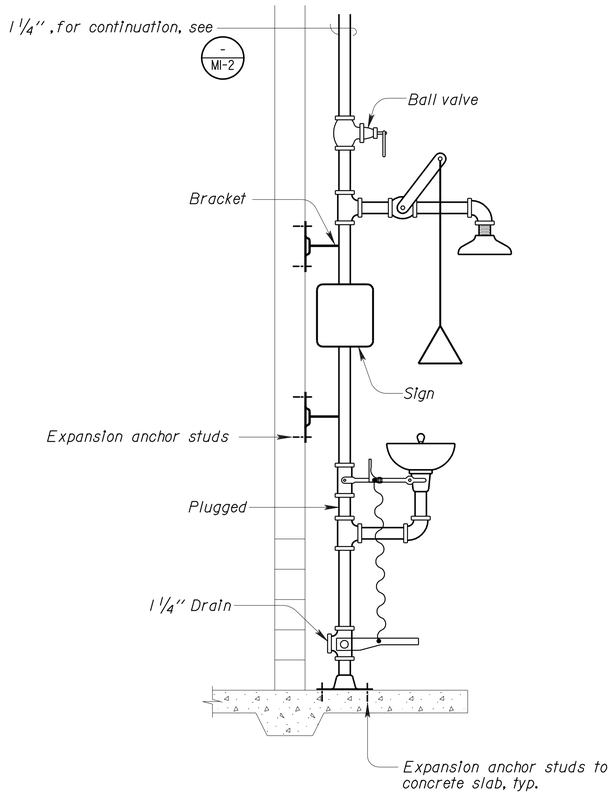

14 BARRIER FREE EMERGENCY EYEWASH AND SHOWER DETAIL

No Scale

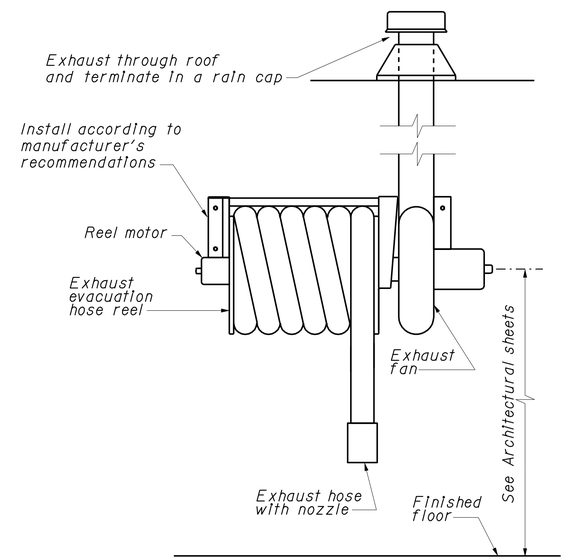

15 EXHAUST EVACUATION HOSE REEL AND FAN DETAIL

No Scale

(THIS SHEET ACCURATE FOR MECHANICAL WORK ONLY)

	BY	CHECKED
DESIGN	W. Thomas Hughes	Thomas Dietsch
DETAILS	W. Thomas Hughes	Thomas Dietsch
QUANTITIES	W. Thomas Hughes	Thomas Dietsch

STATE OF CALIFORNIA
DEPARTMENT OF TRANSPORTATION

DIVISION OF ENGINEERING SERVICES
ELECTRICAL-MECHANICAL-WATER AND WASTEWATER DESIGN

BRIDGE NO. 17M5717
POST MILE

NEVADA CITY MAINTENANCE STATION RESIDENT MECHANIC'S FACILITY

MISCELLANEOUS DETAILS 4

SHEET **M3-6**

DOES SD Imperial Rev. 9/02

ORIGINAL SCALE IN INCHES FOR REDUCED PLANS 0 1 2 3

CU 03225
EA 318001

DISREGARD PRINTS BEARING EARLIER REVISION DATES → REVISION DATES (PRELIMINARY STAGE ONLY) 3/30/07 6/19/07 8/29/07 11/16/07 02/16/08 05/23/08 07/09/08 10/24/08 SHEET OF

20-JAN-2010 14:09
m3_6.dgn

DIST.	COUNTY	ROUTE	POST MILES TOTAL PROJECT	SHEET NO.	TOTAL SHEETS
03	Nev	5717		86	106

REGISTERED MECHANICAL ENGINEER 10-27-08 DATE

REGISTERED PROFESSIONAL ENGINEER Jack Wheeler No. 21648 Exp. 6-30-09 MECH STATE OF CALIFORNIA

1-26-09
PLANS APPROVAL DATE

The State of California or its officers or agents shall not be responsible for the accuracy or completeness of electronic copies of this plan sheet.

ACCESSIBILITY DESIGN APPROVAL STAMP
DOT / DES / OTA
03-318001
DISTRICT - EA
Reviewed by: YA WANG
Date: 10-27-08

CALIFORNIA STATE FIRE MARSHAL APPROVED
Approval of this plan does not authorize or approve any omission or deviation from applicable regulations. Final approval is subject to field inspection. One set of approved plans shall be available on the project site at all times.
Reviewed by: JEFFREY SCHWARTZ
Approval date: 1/11/10

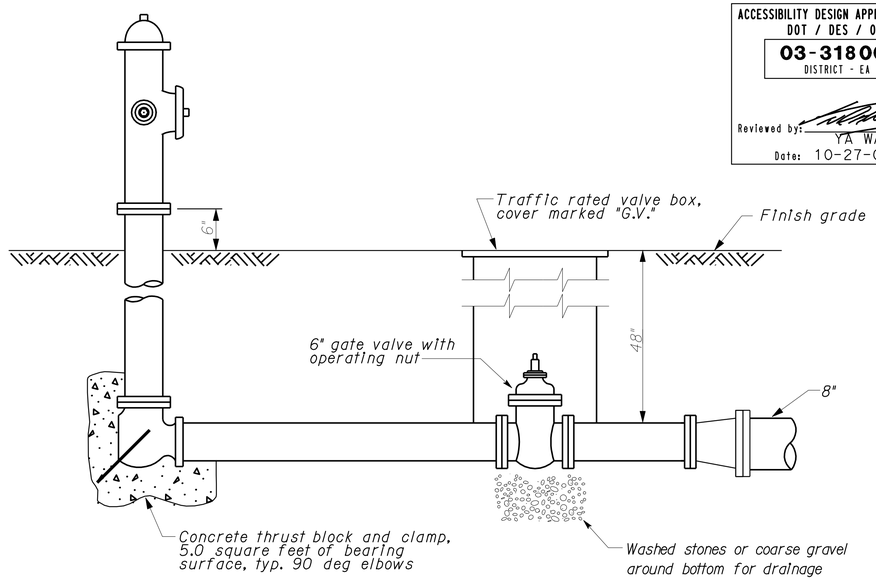

18 FIRE HYDRANT DETAIL

No Scale

Notes

1 3½" Pipe
2 Reducer (3½" to 2½")
3 2½" Wye strainer
4 Gauge (0 - 90 psi)
5 2½" Pressure Regulating Valve
6 Pressure Relief Valve
7 2½" Pipe

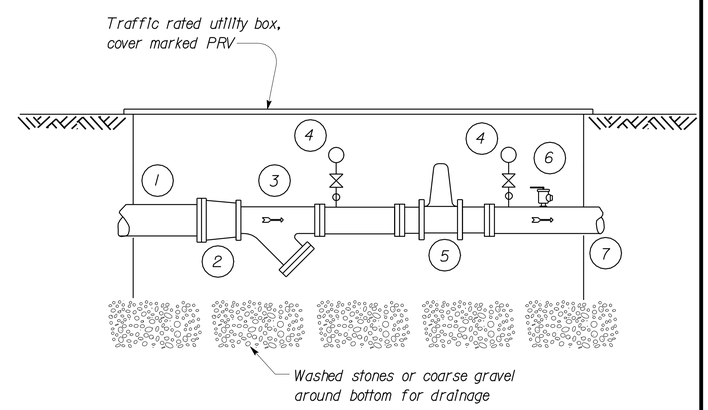

17 PRESSURE REDUCING VALVE

No Scale

Notes

1 4" GSP Pipe
2 Reducer (4" to 3")
3 3" Wye strainer
4 3" Gate Valve
5 3" Backflow Preventer
6 Shut-off Cock
7 Gauge (0 - 90 psi)
8 3" Pressure Reducing Valve
9 Pressure Relief Valve
10 Reducer (3" to 4")
11 4" Gate Valve (w/freeze protection drain), with operating nut and wrench

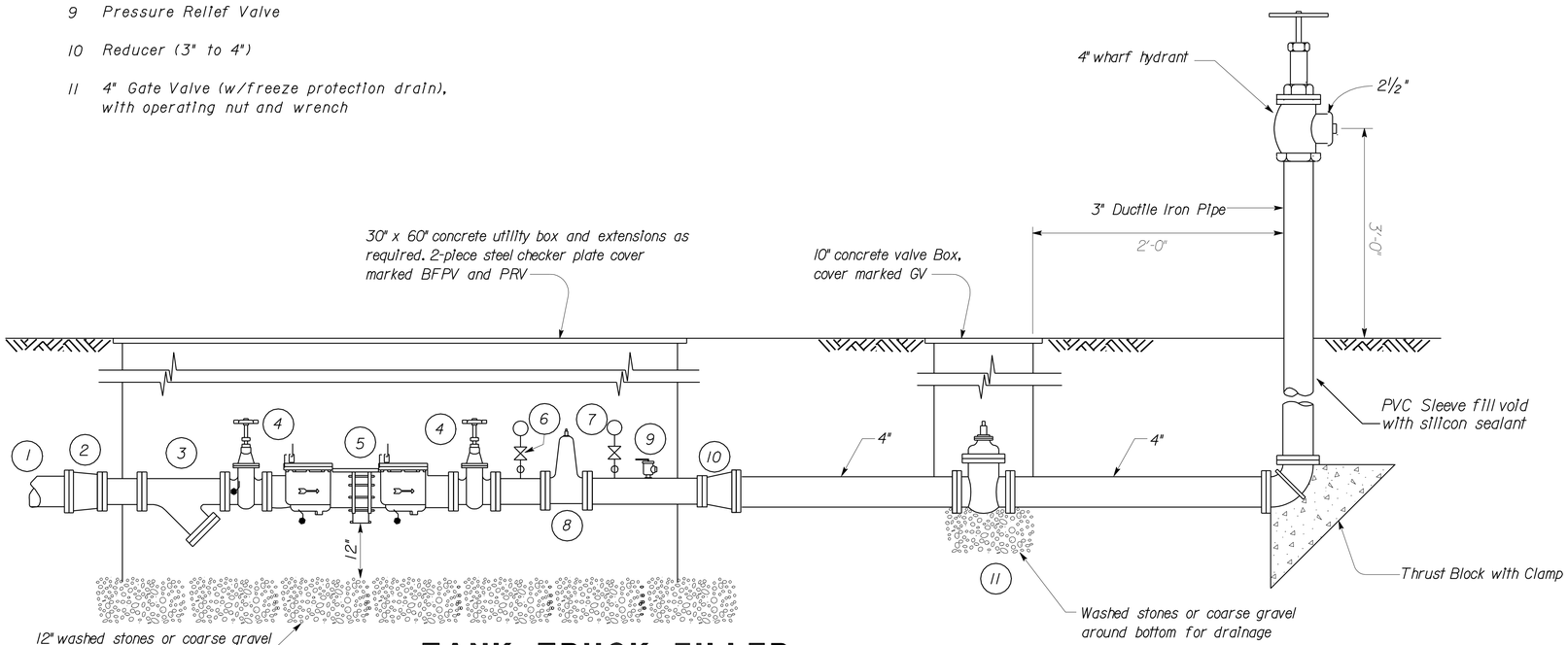

16 TANK TRUCK FILLER

No Scale

(THIS SHEET ACCURATE FOR MECHANICAL WORK ONLY)

	BY	CHECKED
DESIGN	W. Thomas Hughes	Thomas Dietsch
DETAILS	W. Thomas Hughes	Thomas Dietsch
QUANTITIES	W. Thomas Hughes	Thomas Dietsch

STATE OF CALIFORNIA
DEPARTMENT OF TRANSPORTATION

DIVISION OF ENGINEERING SERVICES
ELECTRICAL-MECHANICAL-WATER AND WASTEWATER DESIGN

BRIDGE NO. 17M5717
POST MILE

NEVADA CITY MAINTENANCE STATION RESIDENT MECHANIC'S FACILITY

WATER SUPPLY DETAILS

SHEET **M3-7**

DOES SD Imperial Rev. 9/02

ORIGINAL SCALE IN INCHES FOR REDUCED PLANS 0 1 2 3

CU 03225
EA 318001

DISREGARD PRINTS BEARING EARLIER REVISION DATES → 3/30/07 6/19/07 8/29/07 11/16/07 02/16/08 05/23/08 07/09/08 10/24/08

REVISION DATES (PRELIMINARY STAGE ONLY) SHEET OF

20-JAN-2010 14:09

m3_7.dgn

DIST.	COUNTY	ROUTE	POST MILES TOTAL PROJECT	SHEET NO.	TOTAL SHEETS
03	Nev	5717		87	106

ACCESSIBILITY DESIGN APPROVAL STAMP
DOT / DES / OTA
03-318001
DISTRICT - EA
Reviewed by: YA WANG
Date: 10-27-08

CALIFORNIA STATE FIRE MARSHAL
APPROVED
Approval of this plan does not authorize or approve any omission or deviation from applicable regulations. Final approval is subject to field inspection. One set of approved plans shall be available on the project site at all times.
Reviewed by: JEFFREY SCHWARTZ
Approval date: 1/11/10

REGISTERED MECHANICAL ENGINEER — 10-27-08 DATE

REGISTERED PROFESSIONAL ENGINEER — Jack Wheeler — No. 21648 — Exp. 6-30-09 — MECH — STATE OF CALIFORNIA

1-26-09
PLANS APPROVAL DATE

The State of California or its officers or agents shall not be responsible for the accuracy or completeness of electronic copies of this plan sheet.

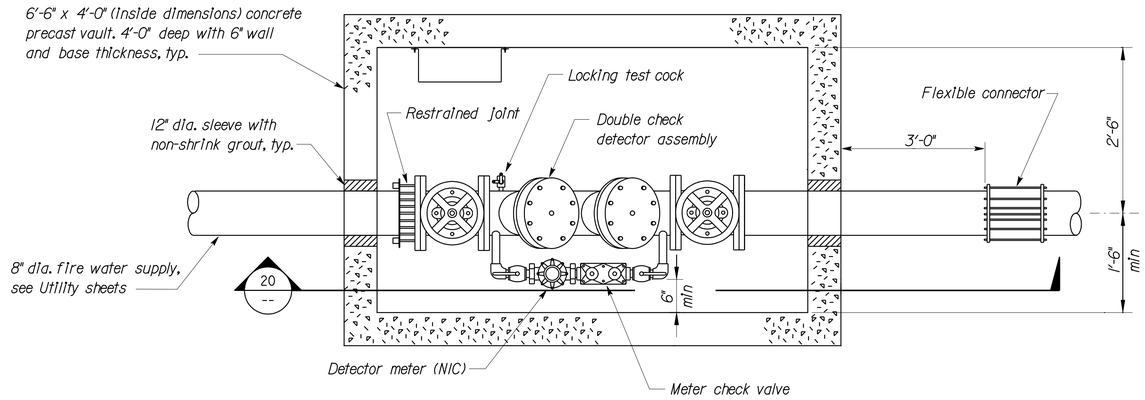

19 DOUBLE CHECK DETECTOR ASSEMBLY

No Scale

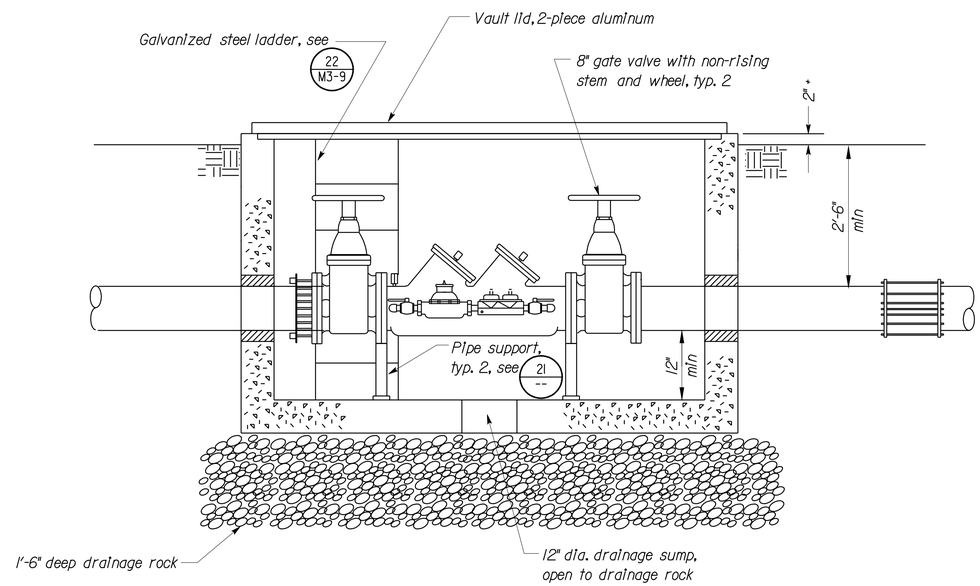

20 SECTION

No Scale

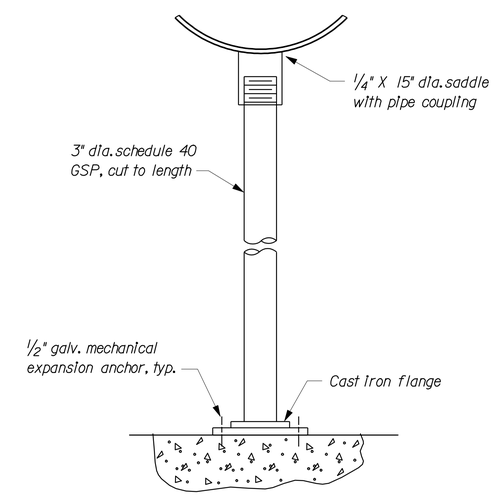

21 PIPE SUPPORT DETAIL

No Scale

(THIS SHEET ACCURATE FOR MECHANICAL WORK ONLY)

	BY	CHECKED
DESIGN	W. Thomas Hughes	Thomas Dietsch
DETAILS	W. Thomas Hughes	Thomas Dietsch
QUANTITIES	W. Thomas Hughes	Thomas Dietsch

STATE OF CALIFORNIA
DEPARTMENT OF TRANSPORTATION

DIVISION OF ENGINEERING SERVICES
ELECTRICAL-MECHANICAL-WATER AND WASTEWATER DESIGN

BRIDGE NO. 17M5717
POST MILE

NEVADA CITY MAINTENANCE STATION
RESIDENT MECHANIC'S FACILITY
FIRE WATER SUPPLY DETAILS

SHEET **M3-8**

DOES SD Imperial Rev. 9/02

ORIGINAL SCALE IN INCHES FOR REDUCED PLANS 0 1 2 3

CU 03225
EA 318001

DISREGARD PRINTS BEARING EARLIER REVISION DATES → 3/30/07 6/19/07 8/29/07 11/16/07 02/18/08 05/23/08 07/09/08 10/24/08

REVISION DATES (PRELIMINARY STAGE ONLY) SHEET OF

20-JAN-2010 14:09

m3_8.dgn

DIST.	COUNTY	ROUTE	POST MILES TOTAL PROJECT	SHEET NO.	TOTAL SHEETS
03	Nev	5717		88	106

REGISTERED MECHANICAL ENGINEER 10-27-08 DATE

REGISTERED PROFESSIONAL ENGINEER Jack Wheeler No. 21648 Exp. 6-30-09 MECH STATE OF CALIFORNIA

1-26-09
PLANS APPROVAL DATE

The State of California or its officers or agents shall not be responsible for the accuracy or completeness of electronic copies of this plan sheet.

ACCESSIBILITY DESIGN APPROVAL STAMP
DOT / DES / OTA
03-318001
DISTRICT - EA
Reviewed by: YA WANG
Date: 10-27-08

CALIFORNIA STATE FIRE MARSHAL
APPROVED
Approval of this plan does not authorize or approve any omission or deviation from applicable regulations. Final approval is subject to field inspection. One set of approved plans shall be available on the project site at all times.
Reviewed by: JEFFREY SCHWARTZ
Approval date: 1/11/10

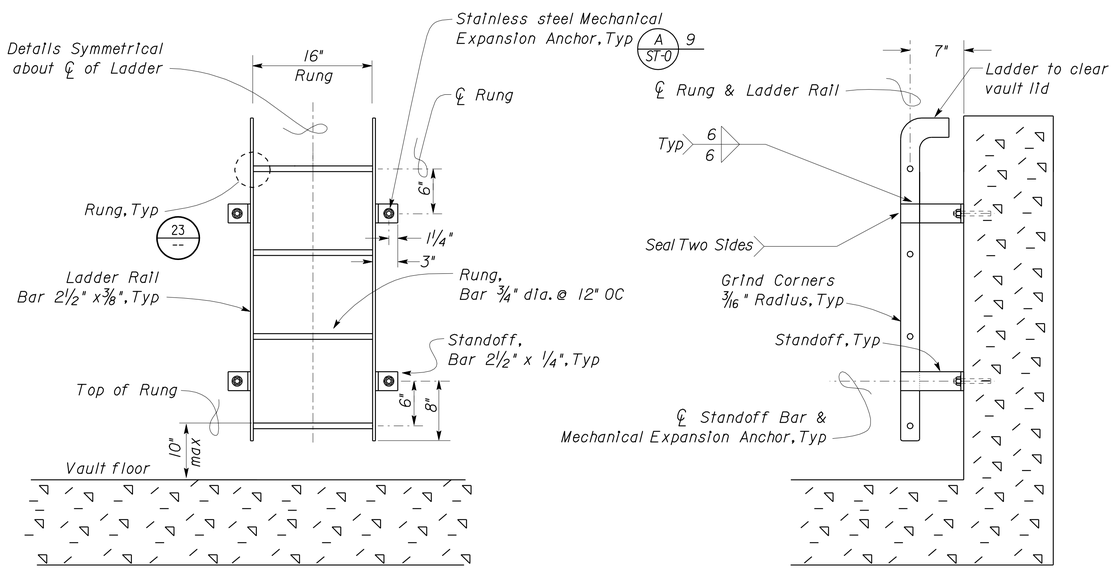

ELEVATION

SIDE VIEW

22 LADDER DETAILS

No Scale

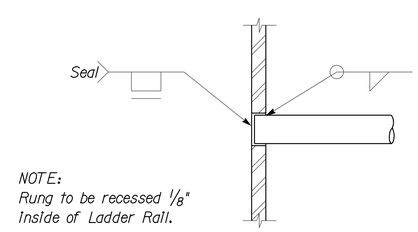

NOTE:
Rung to be recessed ⅛" Inside of Ladder Rail.

23 RUNG DETAILS

No Scale

(THIS SHEET ACCURATE FOR MECHANICAL WORK ONLY)

	BY	CHECKED
DESIGN	W. Thomas Hughes	Thomas Dietsch
DETAILS	W. Thomas Hughes	Thomas Dietsch
QUANTITIES	W. Thomas Hughes	Thomas Dietsch

STATE OF CALIFORNIA DEPARTMENT OF TRANSPORTATION

DIVISION OF ENGINEERING SERVICES
ELECTRICAL-MECHANICAL-WATER AND WASTEWATER DESIGN

BRIDGE NO. 17M5717
POST MILE

NEVADA CITY MAINTENANCE STATION RESIDENT MECHANIC'S FACILITY

LADDER DETAILS

SHEET **M3-9**

DOES SD Imperial Rev. 9/02

ORIGINAL SCALE IN INCHES FOR REDUCED PLANS 0 1 2 3

CU 03225
EA 318001

DISREGARD PRINTS BEARING EARLIER REVISION DATES → REVISION DATES (PRELIMINARY STAGE ONLY) 3/30/07 6/19/07 8/29/07 11/16/07 02/16/08 05/23/08 07/09/08 10/24/08

SHEET OF

20-JAN-2010 14:10

m3_9.dgn

GRAPHIC SYMBOLS FOR ELECTRICAL WIRING AND LAYOUT DIAGRAMS

SYMBOL CEILING	SYMBOL WALL	DESCRIPTION
S	S	SURFACE INCANDESCENT, METAL HALIDE OR SODIUM VAPOR FIXTURE
R	R	RECESSED INCANDESCENT, METAL HALIDE, OR SODIUM VAPOR FIXTURE
B	B	BLANK OUTLET
D		DROP CORD
J	J	JUNCTION BOX
X	X	EXIT LIGHT
		SURFACE OR PENDANT INDIVIDUAL FLUORESCENT FIXTURE
	R	RECESSED INDIVIDUAL FLUORESCENT FIXTURE
		SURFACE OR PENDANT CONTINUOUS ROW FLUORESCENT FIXTURES

NOTE: A LOWER CASE LETTER NEAR GRAPHIC LIGHTING FIXTURE SYMBOL DENOTES THAT FIXTURE IS CONTROLLED BY A SIMILARLY MARKED SWITCH, AN ALPHA-NUMERIC SYMBOL NEAR GRAPHIC LIGHTING FIXTURE SYMBOL DENOTES FIXTURE TYPE, (I=INCANDESCENT, F=FLUORESCENT, MH=METAL HALIDE, H=HIGH PRESSURE SODIUM VAPOR), DESIGN TYPE, NUMBER OF LAMPS AND WATTAGE.

EXAMPLE : (4) F 2 - 2 x 32
- 32 WATT LAMPS
- 2 LAMPS
- DESIGN TYPE
- FLUORESCENT
- NUMBER OF FIXTURES

SYMBOL	DESCRIPTION
	SINGLE RECEPTACLE OUTLET
	DUPLEX RECEPTACLE OUTLET
(GFCI)	DUPLEX RECEPTACLE OUTLET (WITH GFCI)
(GFCI) WP	DUPLEX RECEPTACLE OUTLET, WEATHERPROOF (WITH GFCI)
	SINGLE, SPECIAL PURPOSE RECEPTACLE OUTLET
	DUPLEX, SPECIAL PURPOSE RECEPTACLE OUTLET
R	RANGE OUTLET
C	CLOCK HANGER RECEPTACLE
F	FAN HANGER RECEPTACLE
	FLOOR SINGLE RECEPTACLE OUTLET
	FLOOR DUPLEX RECEPTACLE OUTLET
	FLOOR SPECIAL PURPOSE OUTLET
	FLOOR RADIO OUTLET
	FLOOR TELEPHONE OUTLET
	MULTI-FLOOR OUTLET, 2 OR MORE GANG
	MULTI-OUTLET ASSEMBLY
S	SINGLE POLE SWITCH
S_2	DOUBLE POLE SWITCH
S_3	THREE WAY SWITCH
S_4	FOUR WAY SWITCH
S_D	AUTOMATIC DOOR
S_K	KEY OPERATED SWITCH
S_P	SWITCH AND PILOT LIGHT
S_{MC}	MOMENTARY CONTACT SWITCH
S_{RC}	REMOTE CONTROL SWITCH
S_{WP}	WEATHERPROOF SWITCH
S_F	FAN SWITCH
S_L	LIGHT SWITCH
S_H	HEATER SWITCH
S_{VS}	VARIABLE SPEED MOTOR CONTROL SWITCH
S_{CHLF}	THREE SWITCHES, ONE SWITCH EACH FOR LIGHT, FAN, AND HEAT LAMP

SYMBOL	DESCRIPTION
S_{OC2}	WALL SWITCH OCCUPANCY SENSOR
S_T	MANUAL MOTOR STARTING SWITCH, THERMAL OVERLOAD TYPE
S_{OC}	WALL SWITCH OCCUPANCY SENSOR
Ts	TIMER SWITCH
S	SWITCH AND SINGLE RECEPTACLE
S	SWITCH AND DUPLEX RECEPTACLE
C	HAND DRYER NOZZLE
H	HAND DRYER
	RADIO OUTLET
	TELEPHONE OUTLET
	SOUND SYSTEM LOUD SPEAKER OUTLET
	PUSHBUTTON
L	PUSHBUTTON STATION, NC, WITH LOCKING DEVICE FOR OPEN
	PUSHBUTTON STATION MOTOR CONTROL
	BUZZER
	BELL
	COMBINATION BELL-BUZZER
T	THERMOSTAT
PS	PRESSURE SWITCH
R	CONTROL RELAY
FS	FLOW SWITCH
PEC	PHOTOELECTRIC CELL
R	RADIO OUTLET
TV	TELEVISION OUTLET
M	MICROPHONE OUTLET
	FLUSH-MOUNTED PANELBOARD AND CABINET
	SURFACE-MOUNTED PANELBOARD AND CABINET
	LIGHTING PANEL
	POWER PANEL
	COMBINATION LIGHTING AND POWER
MC	MOTOR CONTROLLER
	DISCONNECT SWITCH
	CONDUIT CONCEALED IN CEILING OR WALL
	CONDUIT CONCEALED IN FLOOR
	CONDUIT EXPOSED
	CROSS-LINES INDICATE NUMBER OF #12 AWG CONDUCTORS. LONGER CROSS-LINE INDICATES 1#12 AWG (G) FOR EQUIPMENT GROUNDING CONDUCTOR. NO CROSS-LINE INDICATES 2#12 WITH 1#12 (G) UNLESS OTHERWISE NOTED. ALL CONDUIT SHALL BE 1/2" UNLESS OTHERWISE NOTED.
A1, A2	HOMERUN TO PANELBOARD, ARROWS INDICATE NUMBER OF CIRCUITS, LETTER DENOTES PANEL-BOARD, NUMERAL DENOTES CIRCUIT.
SM	SURFACE METAL RACEWAY

(2) 16C, PVC, 2#12
- CONDUCTOR INFO (PER CONDUIT)
- CONDUIT TYPE
- CONDUIT SIZE
- NUMBER OF CONDUITS (NO NUMBER INDICATES ONE CONDUIT)

SYMBOL	DESCRIPTION
MC	CONDUIT, METALLIC UNDERGROUND
PVC	CONDUIT, POLYVINYL CHLORIDE, UNDERGROUND
	CONDUIT, FLEXIBLE
	CONDUIT, TURN UP
	CONDUIT, TURN DOWN
	CONDUIT SEAL, EXPLOSION-PROOF
X	CONDUIT, EXPANSION JOINT
	ADAPTER, ONE TYPE CONDUIT TO ANOTHER
	POLE
	POLE-TOP LUMINAIRE
	POLE-ARM LUMINAIRE

SYMBOL	DESCRIPTION
DH	POWER TRANSFER DOOR HINGE
E	ELECTRIFIED LOCK SET
R	DIGITAL CARD READER
AV	AUDIO/VISUAL ALARM DEVICE
G	GLASS BREAK DISCRIMINATOR
C	MAGNETIC CONTACT SWITCH-PEDESTRIAN DOOR
C	MAGNETIC CONTACT SWITCH-OVERHEAD VEHICLE GARAGE DOOR
K	DIGITAL KEYPAD FOR ALARM SYSTEM
W	COMBINATION DETECTOR (MICROWAVE/PASSIVE INFRARED)
	PULL BOX-LETTER INDICATES TYPE OF PULL BOX (E-ELECTRICAL, T-TELEPHONE, R-RADIO)
(T)	PULL BOX (TRAFFIC RATED)-LETTER INDICATES TYPE OF PULL BOX (E-ELECTRICAL, T-TELEPHONE, R-RADIO)
CHLF	COMBINATION HEAT, LIGHT AND FAN UNIT
A / EE-2	SECTION/ELEVATION LETTER / SHEET NUMBER
1 / EE-2	DETAIL NUMBER / SHEET NUMBER

REMODEL WORK

SYMBOL	DESCRIPTION
	EXISTING FLUORESCENT FIXTURE-TO REMAIN
	EXISTING FLUORESCENT FIXTURE-REMOVE
	EXISTING INCANDESCENT FIXTURE-TO REMAIN
	EXISTING INCANDESCENT FIXTURE-REMOVE
	EXISTING OUTLET-TO REMAIN
	EXISTING RECEPTACLE OUTLET-TO REMAIN
	EXISTING RECEPTACLE OUTLET-REMOVE
-E-E-	EXISTING CONDUIT AND CONDUCTORS-TO REMAIN UNLESS OTHERWISE NOTED
-**-	EXISTING CONDUIT AND CONDUCTORS-REMOVE
S	EXISTING SWITCH-TO REMAIN
	EXISTING SWITCH-REMOVE
J	EXISTING JUNCTION BOX-TO REMAIN
	EXISTING JUNCTION BOX-REMOVE

STANDARD NOTES

AB	ABANDON, IF APPLIED TO CONDUIT, REMOVE CONDUCTORS.
BC	INSTALL PULL BOX IN EXISTING CONDUIT RUN.
CB	INSTALL CONDUIT INTO EXISTING PULL BOX.
CC	CONNECT NEW AND EXISTING CONDUIT. REMOVE EXISTING CONDUCTORS AND INSTALL CONDUCTORS AS INDICATED.
CF	CONDUIT TO REMAIN FOR FUTURE USE. REMOVE CONDUCTORS, INSTALL PULL ROPE AND PLUG.
FA	REMOVE FOUNDATION ABOVE GRADE AND ABANDON FOUNDATION BELOW GRADE.
RL	RELOCATE EQUIPMENT.
RLD	RELOCATED EQUIPMENT.
SC	SPLICE NEW TO EXISTING CONDUCTORS.

GRAPHIC SYMBOLS FOR ELECTRICAL DIAGRAMS

SYMBOL	DESCRIPTION
	CIRCUIT BREAKER, SINGLE POLE
	CIRCUIT BREAKER, DOUBLE POLE
	CIRCUIT BREAKER, THREE POLE
GFCI	CIRCUIT BREAKER, WITH GROUND FAULT CIRCUIT INTERRUPTER
	CONTACT, NORMALLY OPEN
	CONTACT, NORMALLY CLOSED
	CONTACT, NORMALLY CLOSED, TIME DELAY CLOSING ON DE-ENERGIZING
	CONTACT, NORMALLY OPEN, TIME DELAY OPENING ON DE-ENERGIZING
	CONTACT, NORMALLY OPEN, TIME DELAY CLOSING ON ENERGIZING
	CONTACT, NORMALLY CLOSED, TIME DELAY OPENING ON ENERGIZING
	CONTACT, SINGLE POLE DOUBLE-THROW
	OPERATING COIL
	LIQUID LEVEL ACTUATED SWITCH, NORMALLY CLOSED
	LIQUID LEVEL ACTUATED SWITCH, NORMALLY OPEN
	PRESSURE ACTUATED SWITCH, NORMALLY CLOSED
	PRESSURE ACTUATED SWITCH, NORMALLY OPEN
	FLOW ACTUATED SWITCH, NORMALLY CLOSED
	FLOW ACTUATED SWITCH, NORMALLY OPEN
	TEMPERATURE ACTUATED SWITCH, NORMALLY CLOSED
	TEMPERATURE ACTUATED SWITCH, NORMALLY OPEN
	LIMIT SWITCH, NORMALLY CLOSED
	LIMIT SWITCH, NORMALLY OPEN
	PUSHBUTTON SWITCH, NORMALLY CLOSED
	PUSHBUTTON SWITCH, NORMALLY OPEN
	SWITCH, SINGLE-POLE
	SWITCH, SINGLE-POLE, DOUBLE-THROW
	SWITCH, DOUBLE-POLE
	SWITCH, DOUBLE-POLE, DOUBLE-THROW
	SWITCH, SINGLE-POLE, 3-POSITION
	THERMAL OVERLOAD
	FUSE
	RESISTOR
	VARIABLE RESISTOR
	TRANSFORMER WINDING
	GROUNDING ELECTRODE
	ENCLOSURE BOND
A	PILOT LIGHT (A=AMBER, G=GREEN, R=RED)
G	GENERATOR
M	MOTOR
F	FAN MOTOR

PROJECT NOTES

A. SEPARATE GROUNDED (NEUTRAL) CONDUCTOR SHALL BE USED FOR EACH 120-VOLT CIRCUIT.

B. HOMERUNS TO PANELBOARDS SHALL BE INSTALLED AS SHOWN ON THE PLANS. HOMERUNS SHALL NOT BE COMBINED.

C. A SINGLE INSULATED EQUIPMENT GROUNDING CONDUCTOR (SIZED AS REQUIRED) SHALL BE INSTALLED IN EACH CONDUIT RUN.

CALIFORNIA STATE FIRE MARSHAL APPROVED
Approval of this plan does not authorize or approve any omission or deviation from applicable regulations. Final approval is subject to field inspection. One set of approved plans shall be available on the project site at all times.
Reviewed by: Pam Emick
PAM EMICK
Approval date: 11/04/08

DIST.	COUNTY	ROUTE	POST MILES TOTAL PROJECT	SHEET NO.	TOTAL SHEETS
03	Nev	5717		89	106

Christine H. Mamaril 10-29-08
REGISTERED ELECTRICAL ENGINEER — DATE

REGISTERED PROFESSIONAL ENGINEER C.H. MAMARIL No. 12801 Exp. 9-30-10 ELEC STATE OF CALIFORNIA

1-26-09
PLANS APPROVAL DATE

The State of California or its officers or agents shall not be responsible for the accuracy or completeness of electronic copies of this plan sheet.

ACCESSIBILITY DESIGN APPROVAL STAMP
DOT / DES / OTA
03-318001
DISTRICT - EA
Reviewed by: YA WANG
Date: 10-27-08

ABBREVIATIONS

A	AMPERES
A/C	AIR CONDITIONING UNIT
ACS	AIR COMPRESSOR STARTER
AI	ANALOG INPUT
AL	ALARM LIGHT
AO	ANALOG OUTPUT
AVC	AIR VOLUME CONTROLLER
BD	BUILDING DISCONNECT
BRK	BREAKER
C	CONDUIT
CB	CIRCUIT BREAKER
CKT	CIRCUIT
CR	CONTROL RELAY
CSW	CURRENT SWITCH
DI	DIGITAL INPUT
DO	DIGITAL OUTPUT
DP	DUPLEX PLUG RECEPTACLE
DS	DOOR SWITCH
(E)	EXISTING
EF	EXHAUST FAN
F	FUSE
FL	FAILURE LIGHT
FLA	FLASHER
FLEX	FLEXIBLE CONDUIT
FLS	FLOW SWITCH
FR	FAILURE RESET
FS	FLOAT SWITCH
G	GROUND
GFCI	GROUND FAULT CIRCUIT INTERRUPTER
GRS	GALVANIZED RIGID STEEL
IR	INDUCTION RELAY
JB	JUNCTION BOX
L	LIGHT
LC	LIGHTING CONTACTOR
LCP	LIGHTING CONTROL PANEL
LD	LIGHT DISCONNECT
LL	LIQUID LEVEL RELAY
LLC	LIQUID LEVEL CONTROLLER
LP	LIGHT PANEL
LS	LIGHT SWITCH
LT	LIGHT TRANSFORMER
LTO	LIGHT TRANSFORMER OVERLOAD
MB	MAIN BREAKER
MC	METALLIC CONDUIT
MCP	MOTOR CIRCUIT PROTECTOR
MCC	MOTOR CONTROL CENTER
MSB	MAIN SWITCHBOARD
MT	EMPTY CONDUIT
(N)	NEW
NC	NORMALLY CLOSED
NO	NORMALLY OPEN
NSW	NEUTRAL SWITCHING BREAKER
OL	OVERLOAD
P	POLE
PB	PULL BOX
PB	PUSHBUTTON
PG&E	PACIFIC GAS AND ELECTRIC
PFRD	PHASE FAILURE RELAY DISCONNECT
PEC	PHOTOELECTRIC CELL
PL	PILOT LIGHT
PS	PRESSURE SWITCH
PTS	POWER TRANSFER SWITCH
PVC	POLYVINYL CHLORIDE
RES	RESISTOR
RTB	RADIO TERMINAL BOARD
S	STARTER COIL
SD	SERVICE DISCONNECT
SFR	SEAL FAILURE RELAY
SL	SUMP LIGHT
SPR	STANDBY POWER RECEPTACLE
SS	SELECTOR SWITCH
ST	STARTER
SV	SOLENOID VALVE
T	TRANSFORMER
TB	TERMINAL BLOCK
TDR	TIME DELAY RELAY
TGLS	TOGGLE SWITCH
TM	TIME METER
TS	TIMER SWITCH
TSW	TEST SWITCH
TTB	TELEPHONE TERMINAL BOARD
UPS	UNINTERRUPTIBLE POWER SUPPLY
WLS	WATER LEVEL SWITCH
WP	WEATHERPROOF

	BY	CHECKED
DESIGN	Joseph Abdelsayed	C.H. Mamaril
DETAILS	Joseph Abdelsayed	C.H. Mamaril
QUANTITIES	Joseph Abdelsayed	C.H. Mamaril

STATE OF CALIFORNIA
DEPARTMENT OF TRANSPORTATION

DIVISION OF ENGINEERING SERVICES
ELECTRICAL-MECHANICAL-WATER AND WASTEWATER DESIGN

BRIDGE NO. 17M5717
POST MILE 15.9

NEVADA CITY MAINTENANCE STATION
RESIDENT MECHANIC'S FACILITY
LEGEND

SHEET **EE0-0**

DOES SD Imperial Rev. 9/02

ORIGINAL SCALE IN INCHES FOR REDUCED PLANS 0 1 2 3

CU 03225
EA 318001

DISREGARD PRINTS BEARING EARLIER REVISION DATES → 3/14/07 10/29/08

REVISION DATES (PRELIMINARY STAGE ONLY) SHEET OF

21-JAN-2010 06:15

ee0_00.dgn

DIST.	COUNTY	ROUTE	POST MILES TOTAL PROJECT	SHEET NO.	TOTAL SHEETS
03	Nev	5717		90	106

Christine H. Mamaril 10-29-08
REGISTERED ELECTRICAL ENGINEER DATE

REGISTERED PROFESSIONAL ENGINEER C.H. MAMARIL No. 12801 Exp. 9-30-10 ELEC STATE OF CALIFORNIA

1-26-09
PLANS APPROVAL DATE

The State of California or its officers or agents shall not be responsible for the accuracy or completeness of electronic copies of this plan sheet.

CALIFORNIA STATE FIRE MARSHAL APPROVED
Approval of this plan does not authorize or approve any omission or deviation from applicable regulations. Final approval is subject to field inspection. One set of approved plans shall be available on the project site at all times.
Reviewed by: JEFFREY SCHWARTZ
Approval date: 1/11/10

ACCESSIBILITY DESIGN APPROVAL STAMP
DOT / DES / OTA
03-318001
DISTRICT - EA
Reviewed by: YA WANG
Date: 10-27-08

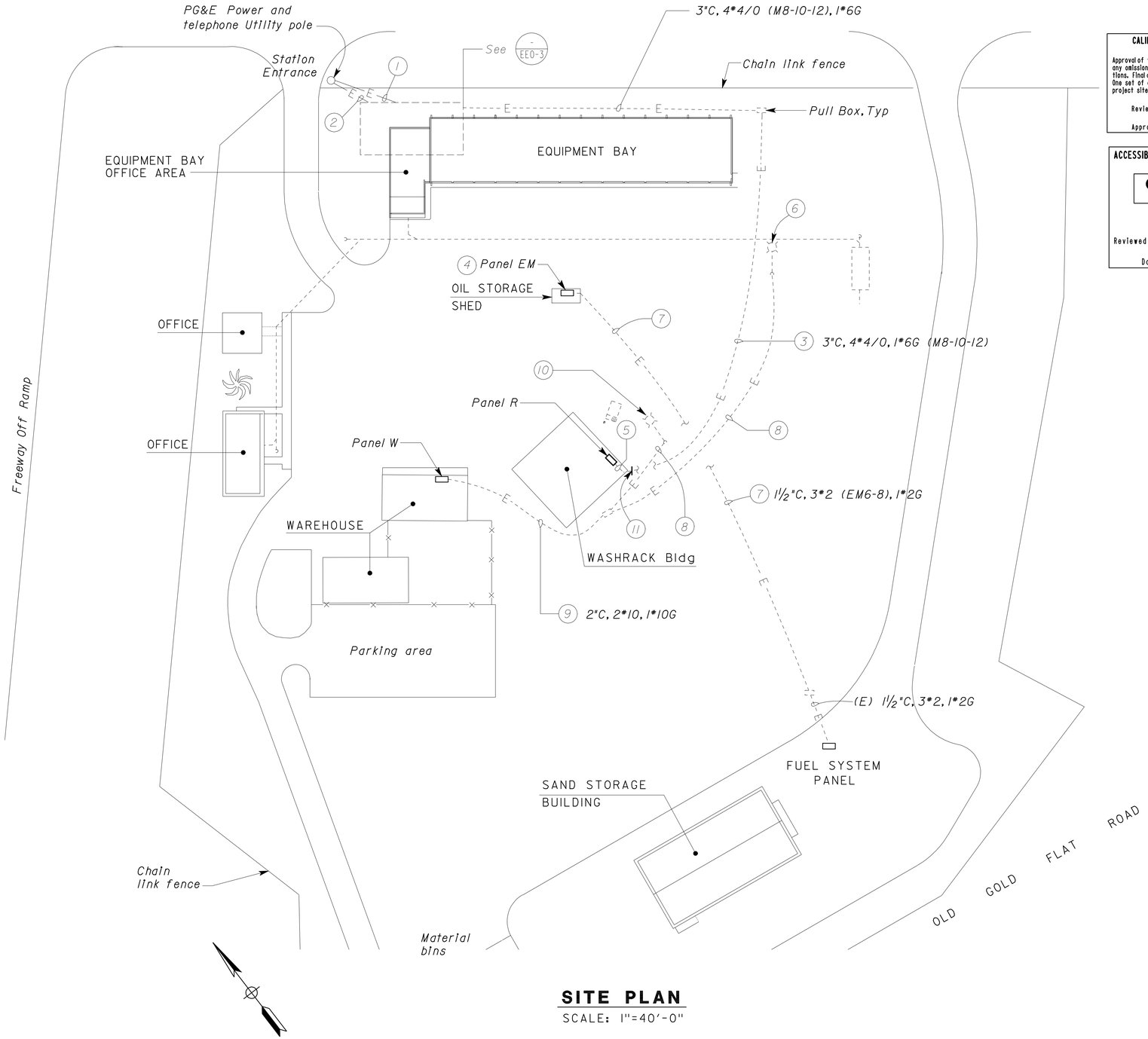

SITE PLAN
SCALE: 1"=40'-0"

Notes:

1. Telephone conduit and cables to TTB.
2. PG&E High Voltage conduit and conductors to Utility transformer.
3. Remove conductors and abandon underground conduit.
4. Disconnect conductors from Circuit EM2-4-6 and mark circuit breaker as SPARE.
5. Remove conductors.
6. Relocate Area Light Luminaire as shown on sheet EEO-2.
7. Remove conductors between Panel EM and pull box. Remove exposed conduit inside Oil Storage Shed and abandon underground conduit. Patch hole resulting from removal of exposed conduit.
8. 1"C, 2*10, 1*10G. Remove conductors and abandon underground conduit.
9. Disconnect conductors inside Panel W and inside pull box and mark conductors on each side as spare.
10. Salvage Area Light Luminaire and 30' pole. Remove foundation and patch asphalt paved surfaces to match existing as directed by the engineer. Contact (530) 885-3648 for pickup of salvaged material.
11. Intercept conduit and install No. 6 Traffic Rated Pull Box.

THIS DRAWING ACCURATE FOR ELECTRICAL WORK ONLY

DESIGN SUPERVISOR
DESIGN ENGINEER

	BY	CHECKED
DESIGN	Joseph Abdelsayed	C.H. Mamaril
DETAILS	Ed D.Tapalla 3/07	Joseph Abdelsayed
QUANTITIES	Joseph Abdelsayed	C.H. Mamaril

STATE OF CALIFORNIA
DEPARTMENT OF TRANSPORTATION

DIVISION OF ENGINEERING SERVICES
ELECTRICAL-MECHANICAL-WATER AND WASTEWATER DESIGN

BRIDGE NO. 17M5717
POST MILE 15.9

NEVADA CITY MAINTENANCE STATION RESIDENT MECHANIC'S FACILITY
EXISTING SITE PLAN

SHEET **EE0-1**

DOES SD Imperial Rev. 9/02

ORIGINAL SCALE IN INCHES FOR REDUCED PLANS 0 1 2 3

CU 03225
EA 318001

DISREGARD PRINTS BEARING EARLIER REVISION DATES → 3/14/07 5/31/07 10/29/08

REVISION DATES (PRELIMINARY STAGE ONLY) SHEET OF

20-JAN-2010 14:10

ee0_01.dgn

DIST.	COUNTY	ROUTE	POST MILES TOTAL PROJECT	SHEET NO.	TOTAL SHEETS
03	Nev	5717		91	106

Christine H. Mamaril 10-29-08
REGISTERED ELECTRICAL ENGINEER DATE

REGISTERED PROFESSIONAL ENGINEER C.H. MAMARIL No. 12801 Exp. 9-30-10 ELEC STATE OF CALIFORNIA

1-26-09
PLANS APPROVAL DATE

The State of California or its officers or agents shall not be responsible for the accuracy or completeness of electronic copies of this plan sheet.

CALIFORNIA STATE FIRE MARSHAL APPROVED
Approval of this plan does not authorize or approve any omission or deviation from applicable regulations. Final approval is subject to field inspection. One set of approved plans shall be available on the project site at all times.
Reviewed by: JEFFREY SCHWARTZ
Approval date: 1/11/10

ACCESSIBILITY DESIGN APPROVAL STAMP DOT / DES / OTA
03-318001
DISTRICT - EA
Reviewed by: YA WANG
Date: 10-27-08

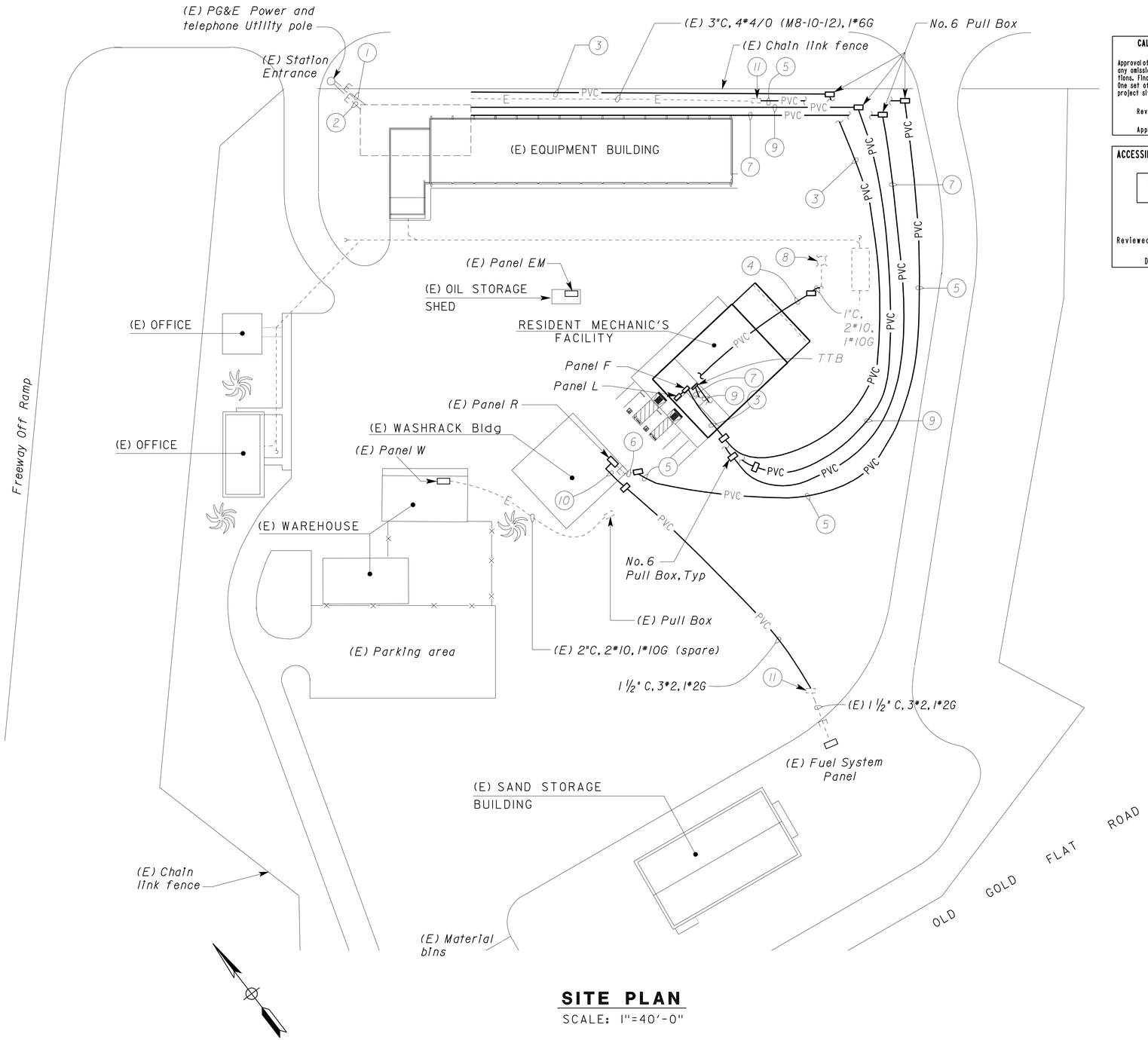

SITE PLAN
SCALE: 1"=40'-0"

General Note:

A. *All conduit elbows and risers shall be PVC coated Galvanized Rigid Steel Conduit. Wrap all joints in touch with soil with 2 layers of pipe wrapping tape.*

Notes:

1. *(E) Telephone conduit and cables to (E) TTB.*
2. *(E) PG&E High Voltage conduit and conductors to Utility transformer.*
3. *4"C, 4*350 MCM, 1*3/0G to Panel F.*
4. *1"C, 2*10 (Conductors 391, N39), 1*10G to Outdoor Lighting Control Panel. For continuation, see - EEI-4*
5. *3"C, 4*4/0, 1*6G.*
6. *(E) 3"C, Install 4*4/0, 1*6G and rewire.*
7. *3"C, 50-Pair Telephone Cable to TTB inside Resident Mechanic's Facility.*
8. *(E) relocated Area Light Luminaire. For foundation details, see sheet ES-7N of the Standard Plans.*
9. *(2) 3"C, Mule Tape to TTB inside Resident Mechanic Facility.*
10. *1 1/2"C, 3*2, 1*2G. Install 70 A/2P Circuit Breaker on spaces 31-33 inside (E) Panel R. Terminate ungrounded circuit conductors at load side of 70 A/2P breaker, grounded circuit conductor at neutral bus, and equipment grounding conductor at ground bus.*
11. *Splice new to existing conductors inside existing pull box.*

THIS DRAWING ACCURATE FOR ELECTRICAL WORK ONLY

	BY	CHECKED
DESIGN	Joseph Abdelsayed	C.H. Mamaril
DETAILS	Ed D.Tapalla 3/07	Joseph Abdelsayed
QUANTITIES	Joseph Abdelsayed	C.H. Mamaril

STATE OF CALIFORNIA DEPARTMENT OF TRANSPORTATION

DIVISION OF ENGINEERING SERVICES
ELECTRICAL-MECHANICAL-WATER AND WASTEWATER DESIGN

BRIDGE NO. 17M5717
POST MILE 15.9

NEVADA CITY MAINTENANCE STATION RESIDENT MECHANIC'S FACILITY
MODIFIED SITE PLAN

SHEET **EE0-2**

DOES SD Imperial Rev. 9/02

ORIGINAL SCALE IN INCHES FOR REDUCED PLANS 0 1 2 3

CU 03225
EA 318001

DISREGARD PRINTS BEARING EARLIER REVISION DATES → 3/14/07 5/31/07 10/29/08

REVISION DATES (PRELIMINARY STAGE ONLY) SHEET OF

20-JAN-2010 14:10

ee0_02.dgn

DIST.	COUNTY	ROUTE	POST MILES TOTAL PROJECT	SHEET NO.	TOTAL SHEETS
03	Nev	5717		92	106

ACCESSIBILITY DESIGN APPROVAL STAMP
DOT / DES / OTA
03-318001
DISTRICT - EA
Reviewed by: YA WANG
Date: 10-27-08

CALIFORNIA STATE FIRE MARSHAL
APPROVED
Approval of this plan does not authorize or approve any omission or deviation from applicable regulations. Final approval is subject to field inspection. One set of approved plans shall be available on the project site at all times.
Reviewed by: JEFFREY SCHWARTZ
Approval date: 1/11/10

Christine H. Mamaril 10-29-08
REGISTERED ELECTRICAL ENGINEER DATE

REGISTERED PROFESSIONAL ENGINEER
C.H. MAMARIL
No. 12801
Exp. 9-30-10
ELEC
STATE OF CALIFORNIA

1-26-09
PLANS APPROVAL DATE

The State of California or its officers or agents shall not be responsible for the accuracy or completeness of electronic copies of this plan sheet.

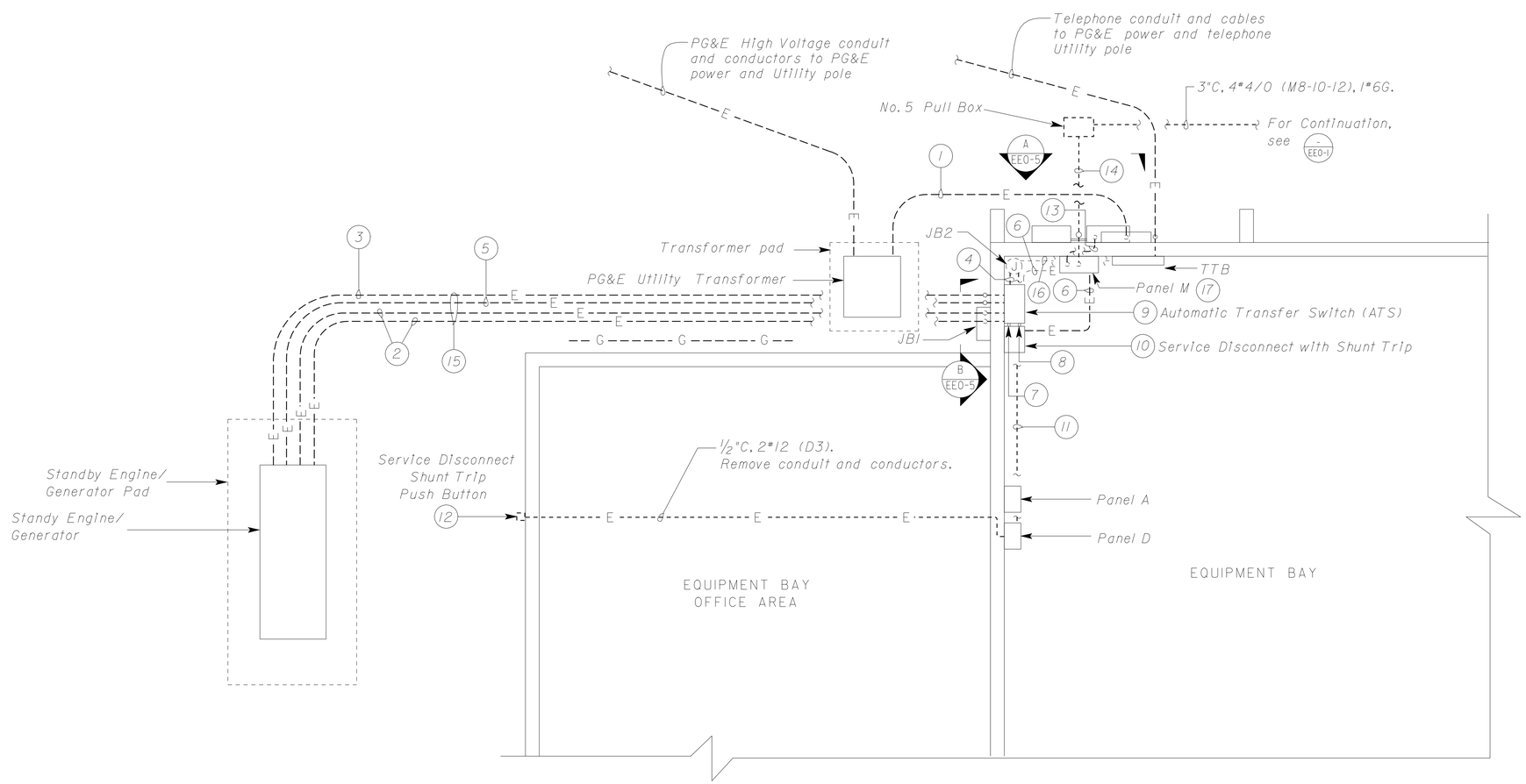

ENLARGED PLAN

SCALE 1/4" = 1'-0"

Notes:

1. 4"C, 4*500 MCM to PG&E Current Transformer thru Gutter. For work required on this conduit, see Note *1, (A/EE0-5)
2. 4"C, 4*500 MCM to ATS. Add 1*3/0G and terminate at the Generator as required.
3. 1"C, 2*10 (D5-7), 1*12G to Panel D thru ATS and JB2.
4. 1"C, 2*10 (D5-7), 2*12 (D3), 1*12G (D5-7 for Generator Heater and D3 for Service Disconnect Shunt Trip Coil). Remove conduit and conductors between ATS and JB2.
5. 1"C, 8*12 and one, one-pair Communication Cable (Generator Controls).
6. 4"C, 4*500 MCM. Remove conduit and conductors.
7. 4" Nipple, 4*500 MCM. Remove conduit and conductors.
8. 4" Nipple, 4*500 MCM & 2*12 (D3) for Shunt Trip Service Disconnect Coil. Remove conduit and conductors.
9. Automatic Transfer Switch (ATS). ATS is manufactured by Onan, Model* OTPCD-4962260 and Serial* G010259819. Relocate all back panel-mounted and door-mounted components of the ATS to the New Main Switchboard. Salvage ATS enclosure. Prior to removal of ATS components for relocation, the contractor shall verify the automatic operation of the ATS in the presence of the engineer.
10. Salvage Service Disconnect.
11. 1"C, 2*10 (D5-7), 3*12 (D2,4), 2*12 (D3) and 2*12G. Remove 2*12 (D3).
12. Remove Service Disconnect Shunt Trip Push Button.
13. 4"C, 4*500 MCM to Service Disconnect via Panel M. For work required on this conduit, see Note *6. (A/EE0-5)
14. 3"C, 4*4/0, 1*6G. Remove conductors between (E) pull box and (E) Panel M. Remove exposed conduit and abandon underground conduit system. Mark circuit breaker inside (E) Panel M as SPARE.
15. For work required on these conduits, see (B/EE0-5)
16. 3/4"C, 3*12 (D2,4) and 1*12G to Receptacle inside TTB. One, one-pair Communication Cable is attached to the outside of the conduit and is terminated at the TTB on SLTA-10 Network Adapter and on ATS terminals 51 and 52. Remove cable.
17. (E) Panel M is Cutler Hammer Class CTL, 400 A, 3-phase, 4-wire, 120/208 V, Type CDP, and Catalog* 393697A. Perform the following at Panel M:
    - Isolate Neutral Bus. Submit details to the engineer for approval.
    - Install suitably sized ground bus inside Panel M.
    - Terminate all new and existing grounding electrode conductors and equipment grounding conductors on this ground bus.

THIS DRAWING ACCURATE FOR ELECTRICAL WORK ONLY

	BY	CHECKED
DESIGN	Joseph Abdelsayed	C.H. Mamaril
DETAILS	Ed D.Tapalla 3/07	Joseph Abdelsayed
QUANTITIES	Joseph Abdelsayed	C.H. Mamaril

STATE OF CALIFORNIA
DEPARTMENT OF TRANSPORTATION

DIVISION OF ENGINEERING SERVICES
ELECTRICAL-MECHANICAL-WATER AND WASTEWATER DESIGN

BRIDGE NO. 17M5717
POST MILE 15.9

NEVADA CITY MAINTENANCE STATION RESIDENT MECHANIC'S FACILITY

EXISTING ENLARGED PLAN

SHEET EE0-3

DOES SD Imperial Rev. 9/02

ORIGINAL SCALE IN INCHES FOR REDUCED PLANS 0 1 2 3

CU 03225
EA 318001

DISREGARD PRINTS BEARING EARLIER REVISION DATES → 3/19/07 6/15/07 7/6/07 10/29/08

REVISION DATES (PRELIMINARY STAGE ONLY) SHEET OF

20-JAN-2010 14:10

ee0_03.dgn

DIST.	COUNTY	ROUTE	POST MILES TOTAL PROJECT	SHEET NO.	TOTAL SHEETS
03	Nev	5717		93	106

Christine H. Mamaril 10-29-08
REGISTERED ELECTRICAL ENGINEER DATE

REGISTERED PROFESSIONAL ENGINEER C.H. MAMARIL No. 12801 Exp. 9-30-10 ELEC STATE OF CALIFORNIA

1-26-09
PLANS APPROVAL DATE

The State of California or its officers or agents shall not be responsible for the accuracy or completeness of electronic copies of this plan sheet.

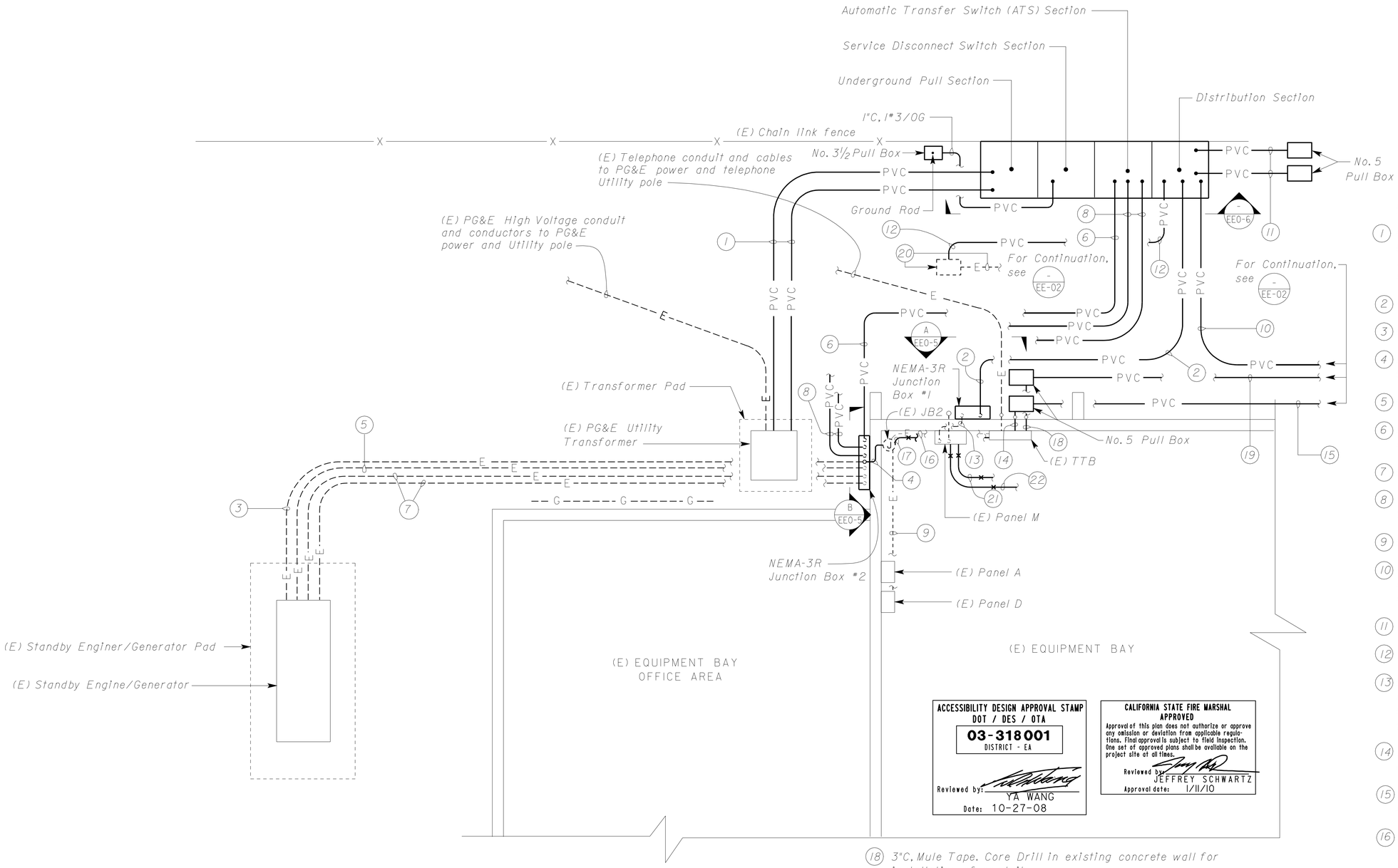

ENLARGED PLAN

SCALE ¼" = 1'-0"

ACCESSIBILITY DESIGN APPROVAL STAMP
DOT / DES / OTA
03-318001
DISTRICT - EA
Reviewed by: YA WANG
Date: 10-27-08

CALIFORNIA STATE FIRE MARSHAL APPROVED
Approval of this plan does not authorize or approve any omission or deviation from applicable regulations. Final approval is subject to field inspection. One set of approved plans shall be available on the project site at all times.
Reviewed by: JEFFREY SCHWARTZ
Approval date: 1/11/10

Notes:

1. 6"C, conductors to be installed by PG&E from Utility Transformer to Utility Metering and Current Transformer Compartment through Underground Pull Section in the new Main Switchboard.
2. 4"C, 4#500 MCM and 1#3/0G.
3. (E) 1"C, 2#10 (D5-7), 1#12G.
4. 1"C, 2#10 (D5-7), 1#12G, and one, one-pair Communication Cable.
5. (E) 1"C, 8#12 and one, one-pair Communication Cable
6. 1"C, 8#12 and two, one-pair Communication Cables to relocated ATS inside Main Switchboard.
7. (E) 4"C, 4#500 MCM, 1#3/0G.
8. 4"C, 4#500 MCM, 1#3/0G to relocated ATS inside Main Switchboard.
9. (E) 1"C, 2#10 (D5-7), 3#12 (D2,4), 2#12G.
10. 4"C, 4#350 MCM and 1#3/0G to Panel F inside Resident Mechanic Facility. For work required on this conduit, see EE0-2
11. 4"C, MT.
12. 3"C, 4#4/0, 1#6G.
13. (E) 4"C to (E) Panel M. Install 4#500 MCM and 1#3/0G. Terminate conductors on the line side of the main circuit breaker and neutral and ground bus as required.
14. 3"C, 50-Pair Cable. Core Drill in existing concrete wall for installation of conduit.
15. 3"C, 50-Pair Cable to TTB inside Resident Mechanic Facility.
16. (E) ¾"C, 3#12 (D2,4) and 1#12G to Receptacle inside TTB.
17. ½"C, one, one-pair Communication Cable. Terminate Communication Cable on SLTA-10 Network Adapter in the same manner as previous Communication Cable was terminated (see Note 16 on EE0-3).
18. 3"C, Mule Tape. Core Drill in existing concrete wall for installation of conduit.
19. 3"C, Mule Tape to TTB inside Resident Mechanic's Facility.
20. (E) 3"C, 4#4/0, 1#6G. Splice new to existing conductors inside (E) pull box.
21. 1"C, 1#3/0G without splices. Bond to interior Water and Gas Pipe located in Bay #1 of (E) Equipment Bay.
22. 1"C, 1#3/0G without splices. Bond to interior Air Pipe located in Bay #6 of (E) Equipment Bay.

THIS DRAWING ACCURATE FOR ELECTRICAL WORK ONLY

	BY	CHECKED
DESIGN	Joseph Abdelsayed	C.H. Mamaril
DETAILS	Ed D.Tapalla 3/07	Joseph Abdelsayed
QUANTITIES	Joseph Abdelsayed	C.H. Mamaril

STATE OF CALIFORNIA
DEPARTMENT OF TRANSPORTATION

DIVISION OF ENGINEERING SERVICES
ELECTRICAL-MECHANICAL-WATER AND WASTEWATER DESIGN

BRIDGE NO. 17M5717
POST MILE 15.9

NEVADA CITY MAINTENANCE STATION RESIDENT MECHANIC'S FACILITY

MODIFIED ENLARGED PLAN

SHEET **EE0-4**

DOES SD Imperial Rev. 9/02

ORIGINAL SCALE IN INCHES FOR REDUCED PLANS 0 1 2 3

CU 03225
EA 318001

DISREGARD PRINTS BEARING EARLIER REVISION DATES → 3/19/07 6/15/07 7/6/07 10/29/08

REVISION DATES (PRELIMINARY STAGE ONLY) SHEET OF

20-JAN-2010 14:11

ee0_04.dgn

DIST.	COUNTY	ROUTE	POST MILES TOTAL PROJECT	SHEET NO.	TOTAL SHEETS
03	Nev	5717		94	106

REGISTERED ELECTRICAL ENGINEER — Christine H. Mamaril — DATE 10-29-08

REGISTERED PROFESSIONAL ENGINEER — C.H. MAMARIL — No. 12801 — Exp. 9-30-10 — ELEC — STATE OF CALIFORNIA

PLANS APPROVAL DATE 1-26-09

The State of California or its officers or agents shall not be responsible for the accuracy or completeness of electronic copies of this plan sheet.

ACCESSIBILITY DESIGN APPROVAL STAMP
DOT / DES / OTA
03-318001
DISTRICT - EA
Reviewed by: YA WANG
Date: 10-27-08

CALIFORNIA STATE FIRE MARSHAL APPROVED
Approval of this plan does not authorize or approve any omission or deviation from applicable regulations. Final approval is subject to field inspection. One set of approved plans shall be available on the project site at all times.
Reviewed by: JEFFREY SCHWARTZ
Approval date: 1/11/10

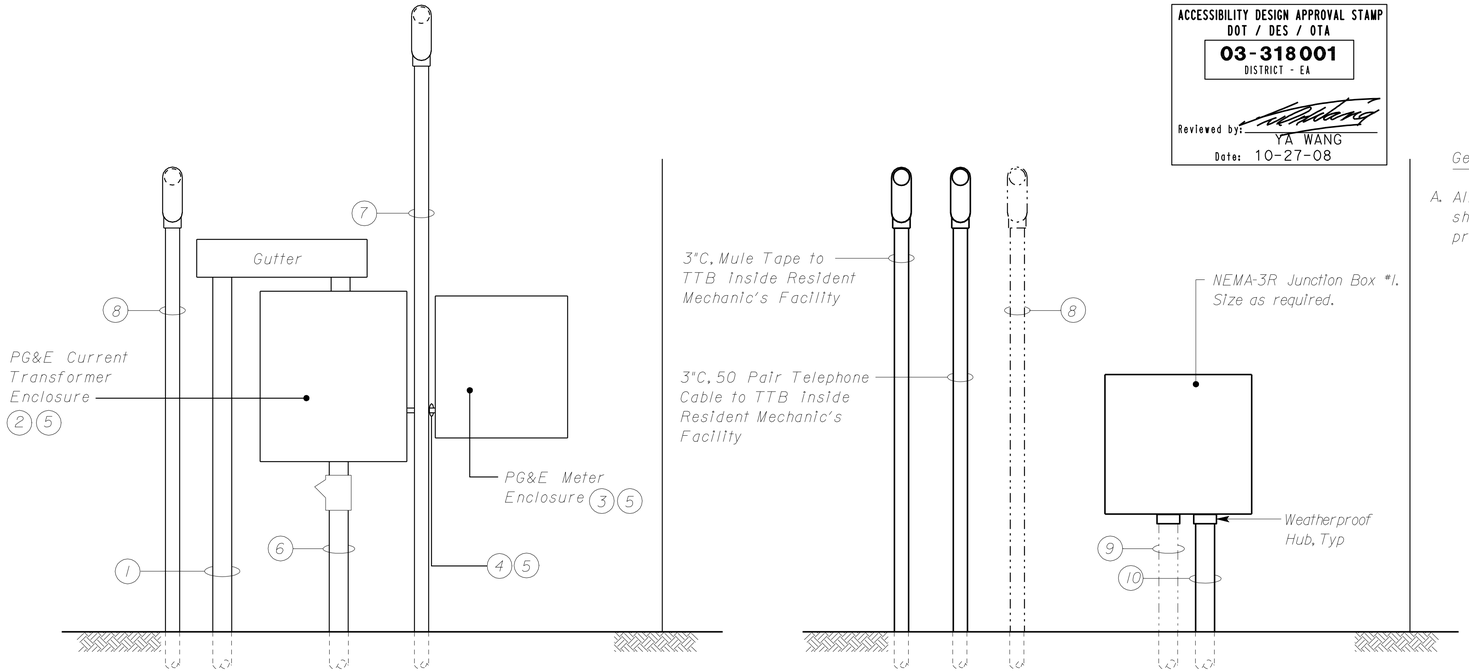

A ELEVATION
NO SCALE

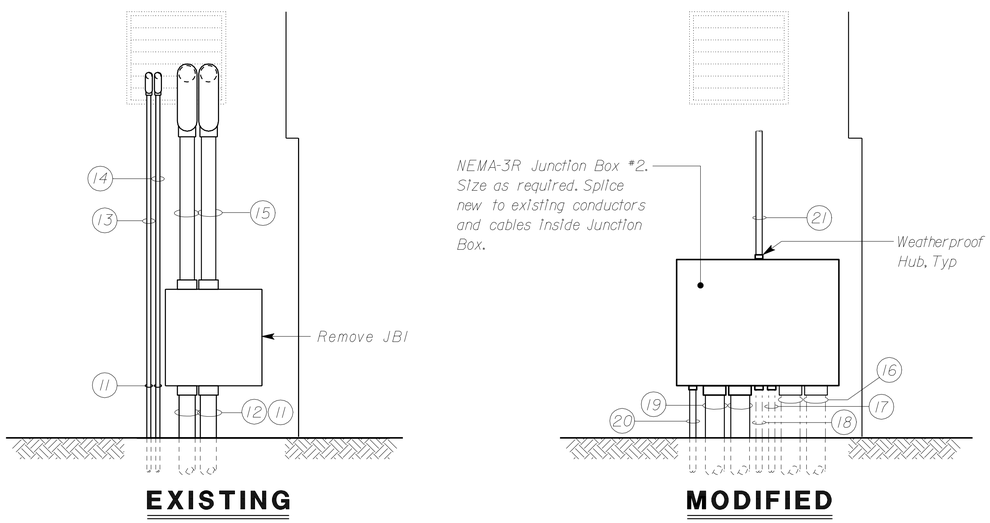

B ELEVATION
NO SCALE

General Note:

A. All conductors and cables going to relocated ATS shall be terminated in the same manner as previously prior to removal and relocation.

Notes:

1. 4"C, 4#500 MCM to PG&E Current Transformer thru Gutter. Remove conductors. Abandon underground conduit. Cut exposed portion of conduit 4" below the ground.
2. Salvage Current Transformer and Enclosure and deliver to PG&E.
3. Salvage PG&E Meter and Enclosure and deliver to PG&E.
4. Remove conduit and conductors.
5. If PG&E is not in need of equipment, dispose.
6. 4"C, 4#500 MCM to Service Disconnect via Panel M. Cut conduit and conductors immediately below conduit seal. Remove conductors and terminate conduit onto NEMA-3R Junction Box (NEMA-3R Junction Box #1).
7. 3"C, 4#4/0 (M8-10-12), 1#6G to (E) Panel M. Remove conduit and conductors. Mark circuit breaker inside (E) Panel M as SPARE.
8. (E) Telephone conduit and cables to PG&E Power and Telephone Utility Pole.
9. (E) 4"C. Install 4#500 MCM and 1#3/0G to (E) Panel M. Terminate conductors on the line side of (E) Panel M main circuit breaker.
10. 4"C, 4#500 MCM and 1#3/0G to Panel M Disconnect inside Main Switchboard.
11. Intercept conduit and terminate onto NEMA-3R Junction Box (NEMA-3R Junction Box #2).
12. 4"C, 4#500 MCM to JB1 to remain. Add 1#3/0G.
13. 1"C, 2#10 (D5-7), 1#12G to Panel D thru Automatic Transfer Switch (ATS) and JB2. Record all conductor terminations prior to their removal for reconnection. Remove conduit and conductors as shown on this sheet.
14. 1"C, 8#12 and one, one-pair Communication Cable to (E) ATS inside the building. Record all conductors and cable terminations prior to their removal for reconnection to relocated ATS and other equipment. Remove conduit and conductors to (E) ATS as shown on this sheet.
15. 4"C, 4#500 MCM to ATS. Remove conduit and conductors.
16. (E) 4"C, 4#500 MCM, 1#3/0G.
17. (E) 1"C, 8#12 and one, one-pair Communication Cable.
18. (E) 1"C, 2#10 (D5-7), 1#12G.
19. 4"C, 4#500 MCM, 1#3/0G to relocated ATS inside Main Switchboard.
20. 1"C, 8#12 and two, one-pair Communication Cables to relocated ATS inside Main Switchboard.
21. 1"C, 2#10 (D5-7), 1#12G and one, one-pair Communication Cable to (E) JB2 inside the building. Splice new to existing conductors inside NEMA-3R Junction Box #2 and (E) JB2.

THIS DRAWING ACCURATE FOR ELECTRICAL WORK ONLY

	BY	CHECKED
DESIGN	Joseph Abdelsayed	C.H. Mamaril
DETAILS	Ed D. Tapalla 03/07	Joseph Abdelsayed
QUANTITIES	Joseph Abdelsayed	C.H. Mamaril

STATE OF CALIFORNIA
DEPARTMENT OF TRANSPORTATION

DIVISION OF ENGINEERING SERVICES
ELECTRICAL-MECHANICAL-WATER AND WASTEWATER DESIGN

BRIDGE NO. 17M5717
POST MILE 15.9

NEVADA CITY MAINTENANCE STATION
RESIDENT MECHANIC'S FACILITY
ENLARGED PLAN DETAILS

SHEET **EE0-5**

DOES SD Imperial Rev. 9/02

ORIGINAL SCALE IN INCHES FOR REDUCED PLANS 0 1 2 3

CU 03225
EA 318001

DISREGARD PRINTS BEARING EARLIER REVISION DATES → 3/22/07 6/15/07 7/10/07 10/29/08

REVISION DATES (PRELIMINARY STAGE ONLY) SHEET OF

20-JAN-2010 14:11

ee0_05.dgn

DIST.	COUNTY	ROUTE	POST MILES TOTAL PROJECT	SHEET NO.	TOTAL SHEETS
03	Nev	5717		95	106

ACCESSIBILITY DESIGN APPROVAL STAMP
DOT / DES / OTA
03-318001
DISTRICT - EA
Reviewed by: YA WANG
Date: 10-27-08

CALIFORNIA STATE FIRE MARSHAL APPROVED
Approval of this plan does not authorize or approve any omission or deviation from applicable regulations. Final approval is subject to field inspection. One set of approved plans shall be available on the project site at all times.
Reviewed by: JEFFREY SCHWARTZ
Approval date: 1/11/10

Christine H. Mamaril 10-29-08
REGISTERED ELECTRICAL ENGINEER DATE

REGISTERED PROFESSIONAL ENGINEER C.H. MAMARIL No. 12801 Exp. 9-30-10 ELEC STATE OF CALIFORNIA

1-26-09
PLANS APPROVAL DATE

The State of California or its officers or agents shall not be responsible for the accuracy or completeness of electronic copies of this plan sheet.

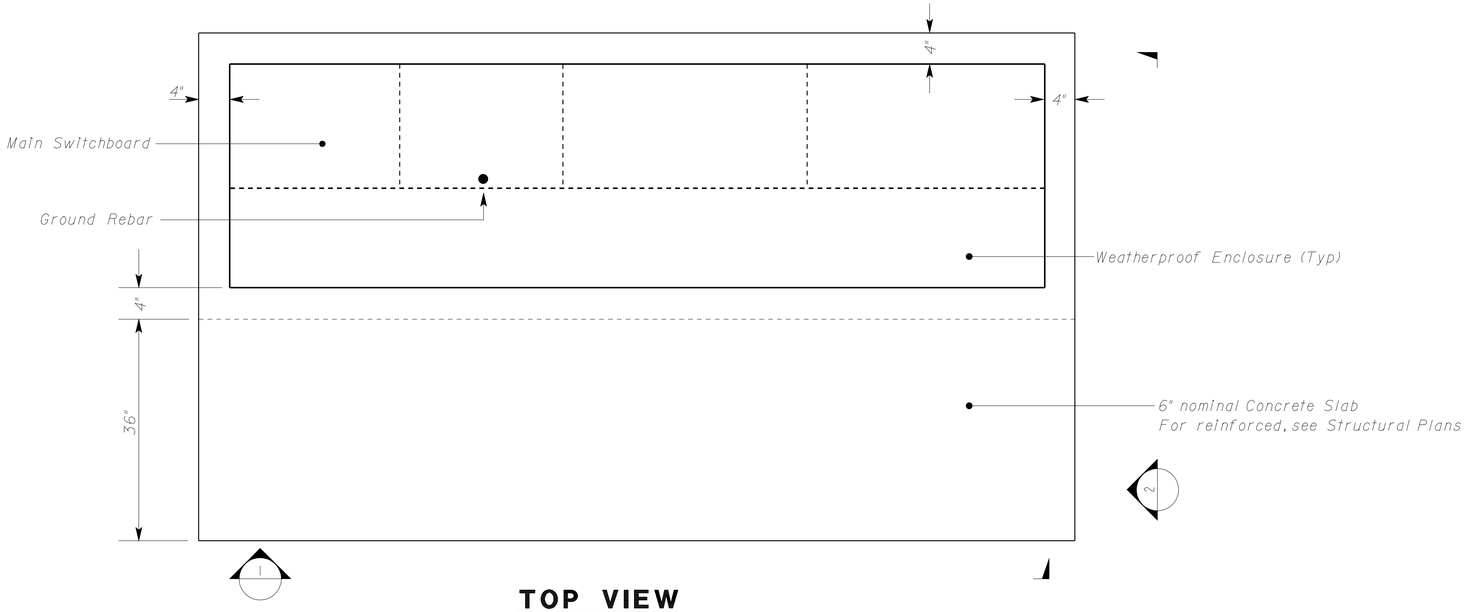

TOP VIEW

Notes:

1. #4 Rebar, 20' in length. Install Rebar 2" from the bottom of the Main Switchboard foundation. Stub rebar inside Service Disconnect Section and bond to #3/0 Copper Conductor.
2. Install Anchor Bolts at location to suit Main Switchboard furnished.
3. (E) Automatic Transfer Switch (ATS). (E) ATS is manufactured by Onan, Model# OTPCD-4962260 and Serial# G010259819. All work relating to the installation of (E) ATS inside the ATS Section of the Main Switchboard shall be performed under the direct supervision of the Onan Field Service Representative. In addition, Onan Field Service Representative shall make certain that all equipment installed functions in fully automatic mode prior to the shipment of the Main Switchboard. Contractor shall field verify dimensions of the (E) ATS prior to relocation into the Automatic Transfer Switch Section of the Main Switchboard.

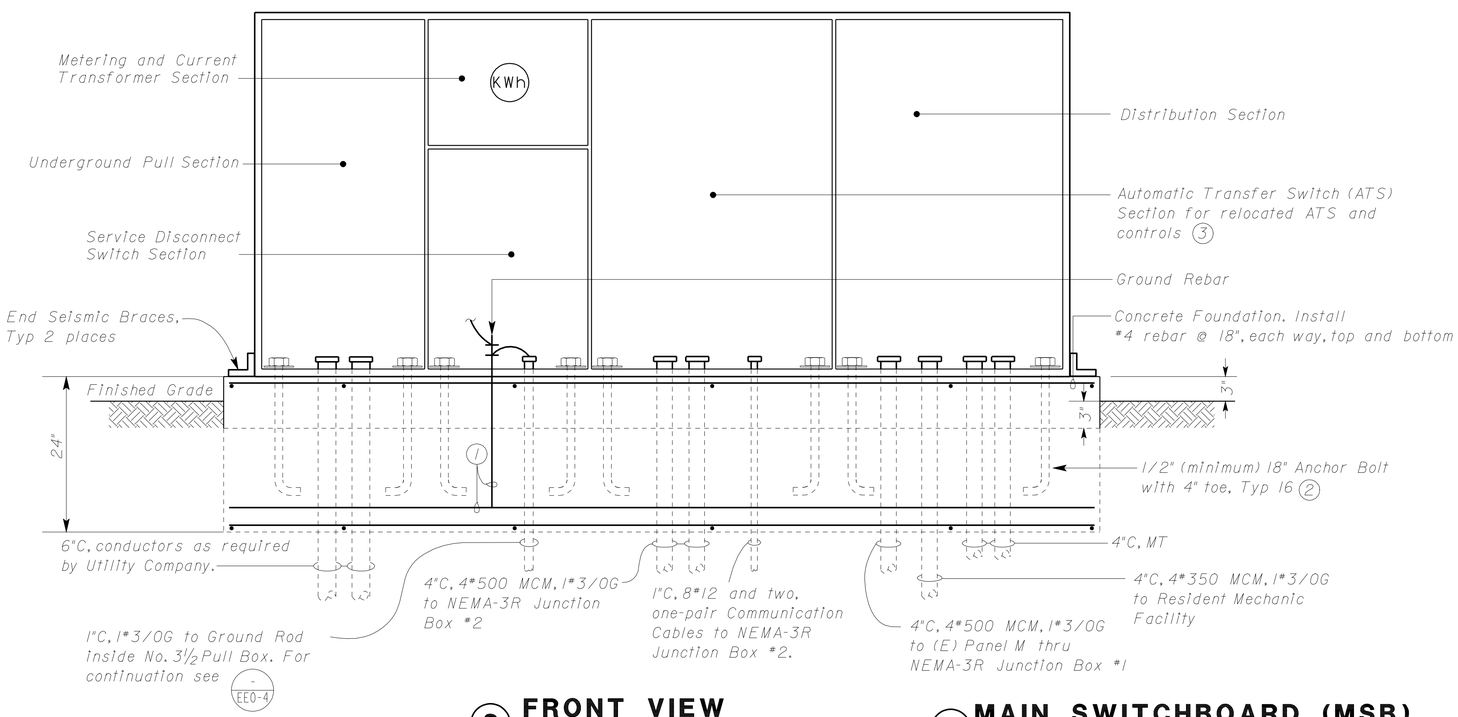

2 FRONT VIEW

A MAIN SWITCHBOARD (MSB)

NO SCALE

(Weatherproof Enclosure Not Shown)

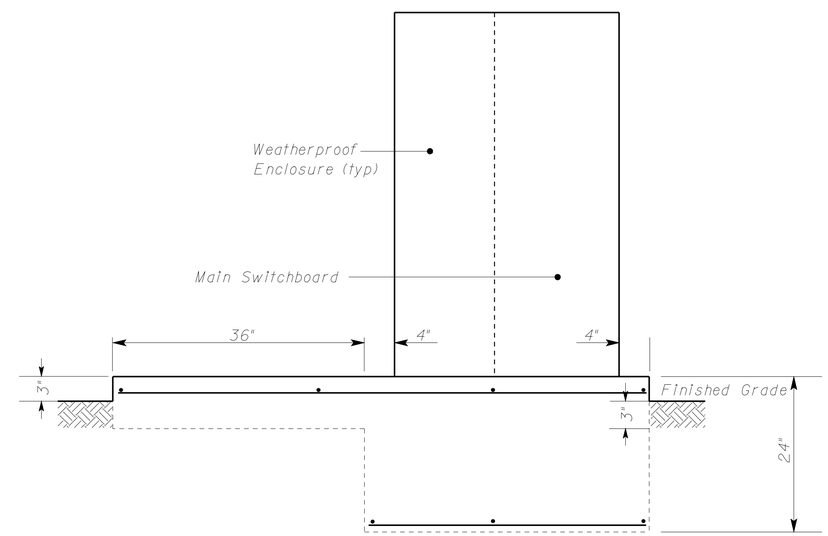

2 SIDE VIEW

THIS DRAWING ACCURATE FOR ELECTRICAL WORK ONLY

	BY	CHECKED
DESIGN	Joseph Abdelsayed	C.H. Mamaril
DETAILS	Ed D.Tapalla 3/07	Joseph Abdelsayed
QUANTITIES	Joseph Abdelsayed	C.H. Mamaril

STATE OF CALIFORNIA
DEPARTMENT OF TRANSPORTATION

DIVISION OF ENGINEERING SERVICES
ELECTRICAL-MECHANICAL-WATER AND WASTEWATER DESIGN

BRIDGE NO. 17M5717
POST MILE 15.9

NEVADA CITY MAINTENANCE STATION RESIDENT MECHANIC'S FACILITY

MAIN SWITCHBOARD AND DETAILS

SHEET **EE0-6**

DOES SD Imperial Rev. 9/02

ORIGINAL SCALE IN INCHES FOR REDUCED PLANS 0 1 2 3

CU 03225
EA 318001

DISREGARD PRINTS BEARING EARLIER REVISION DATES →

REVISION DATES (PRELIMINARY STAGE ONLY) 3/22/07 6/15/07 7/10/07 10/29/08

SHEET OF

20-JAN-2010 14:11

ee0_06.dgn

DIST.	COUNTY	ROUTE	POST MILES TOTAL PROJECT	SHEET NO.	TOTAL SHEETS
03	Nev	5717		96	106

CALIFORNIA STATE FIRE MARSHAL
APPROVED
Approval of this plan does not authorize or approve any omission or deviation from applicable regulations. Final approval is subject to field inspection. One set of approved plans shall be available on the project site at all times.
Reviewed by: JEFFREY SCHWARTZ
Approval date: 1/11/10

Christine H. Mamaril 10-29-08
REGISTERED ELECTRICAL ENGINEER DATE

REGISTERED PROFESSIONAL ENGINEER C.H. MAMARIL No. 12801 Exp. 9-30-10 ELEC STATE OF CALIFORNIA

1-26-09
PLANS APPROVAL DATE

The State of California or its officers or agents shall not be responsible for the accuracy or completeness of electronic copies of this plan sheet.

General Note:

A. Phase Sequence after reconnection shall be the same as existing Phase Sequence.

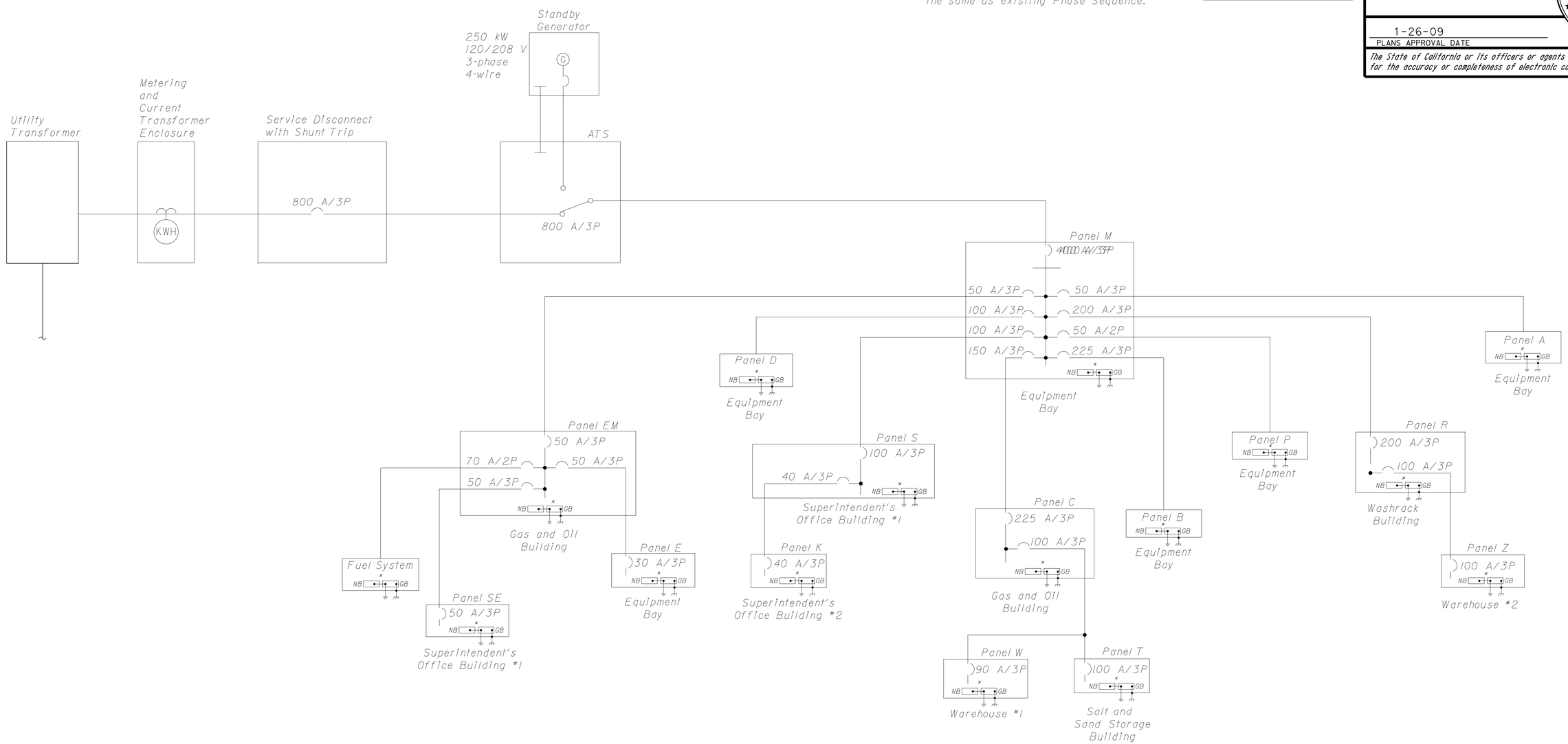

x Remove Main Bonding Jumper in the Panelboard in order to isolate the Neutral Bus. The Contractor shall make certain that the existing Grounding Electrode Conductor is terminated at the Ground Bus, all existing Equipment Grounding Conductors are terminated at the Ground Bus, and all existing Grounded Circuit Conductors are terminated at the Neutral Bus. Otherwise, make corrections as necessary or as required at no cost to the State.

SINGLE LINE DIAGRAM

	BY	CHECKED
DESIGN	Joseph Abdelsayed	C.H. Mamaril
DETAILS	Joseph Abdelsayed	C.H. Mamaril
QUANTITIES	Joseph Abdelsayed	C.H. Mamaril

STATE OF CALIFORNIA
DEPARTMENT OF TRANSPORTATION

DIVISION OF ENGINEERING SERVICES
ELECTRICAL-MECHANICAL-WATER AND WASTEWATER DESIGN

BRIDGE NO. 17M5717
POST MILE 15.9

NEVADA CITY MAINTENANCE STATION RESIDENT MECHANIC'S FACILITY

EXISTING POWER SINGLE LINE DIAGRAM

SHEET EE0-7

DOES SD Imperial Rev. 9/02

ORIGINAL SCALE IN INCHES FOR REDUCED PLANS 0 1 2 3

CU 03225
EA 318001

DISREGARD PRINTS BEARING EARLIER REVISION DATES → 2/16/07 3/15/07 10/29/08

REVISION DATES (PRELIMINARY STAGE ONLY) SHEET OF

20-JAN-2010 14:11

ee0_07.dgn

DIST.	COUNTY	ROUTE	POST MILES TOTAL PROJECT	SHEET NO.	TOTAL SHEETS
03	Nev	5717		97	106

ACCESSIBILITY DESIGN APPROVAL STAMP
DOT / DES / OTA
03-318001
DISTRICT - EA
Reviewed by: YA WANG
Date: 10-27-08

CALIFORNIA STATE FIRE MARSHAL APPROVED
Approval of this plan does not authorize or approve any omission or deviation from applicable regulations. Final approval is subject to field inspection. One set of approved plans shall be available on the project site at all times.
Reviewed by: JEFFREY SCHWARTZ
Approval date: 1/11/10

Christine H. Mamaril 10-29-08
REGISTERED ELECTRICAL ENGINEER DATE

REGISTERED PROFESSIONAL ENGINEER C.H. MAMARIL No. 12801 Exp. 9-30-10 ELEC STATE OF CALIFORNIA

1-26-09
PLANS APPROVAL DATE

The State of California or its officers or agents shall not be responsible for the accuracy or completeness of electronic copies of this plan sheet.

Notes:

(1) Label 200 A/3P circuit breaker as SP ARE.

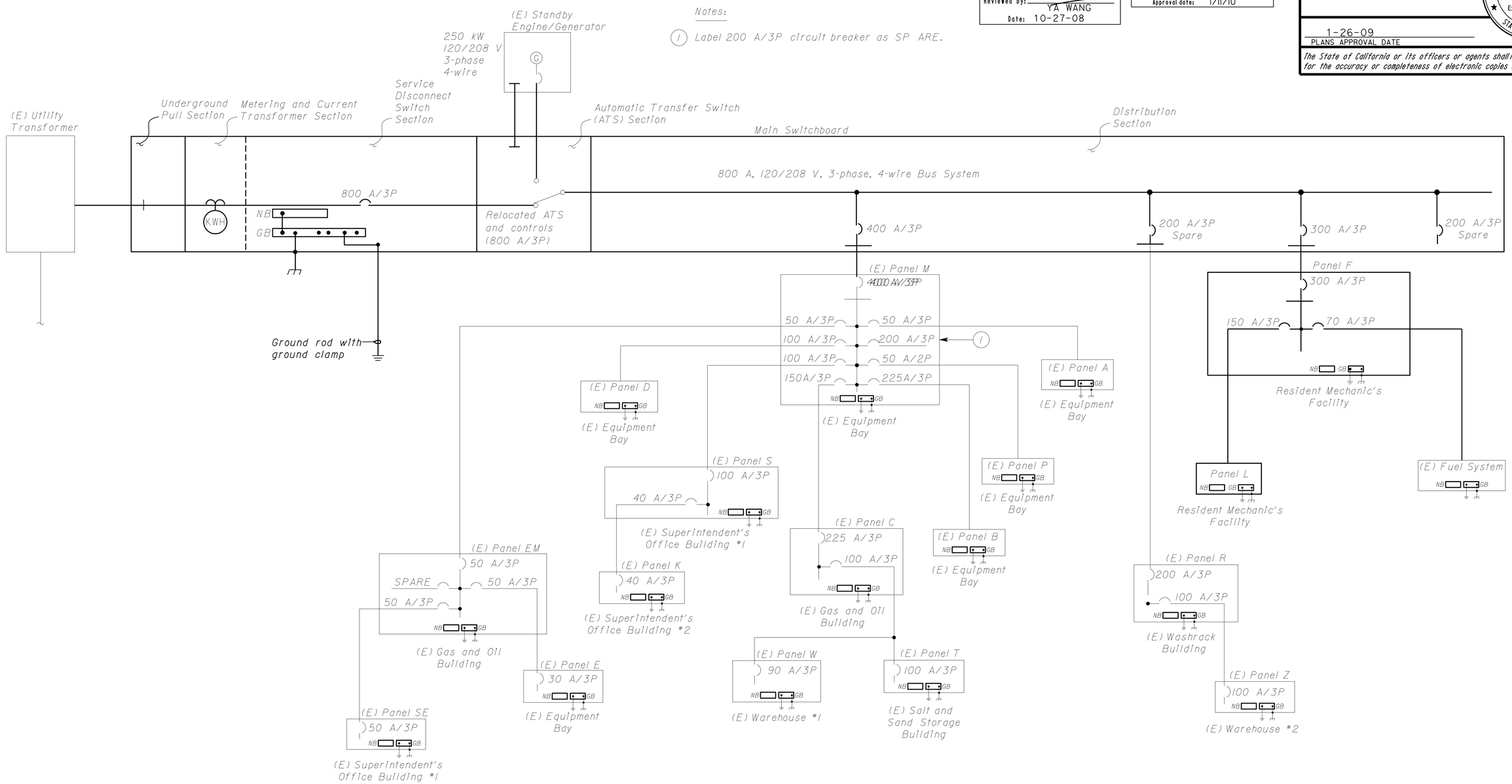

SINGLE LINE DIAGRAM

THIS DRAWING ACCURATE FOR ELECTRICAL WORK ONLY

	BY	CHECKED
DESIGN	Joseph Abdelsayed	C.H. Mamaril
DETAILS	Joseph Abdelsayed	C.H. Mamaril
QUANTITIES	Joseph Abdelsayed	C.H. Mamaril

STATE OF CALIFORNIA
DEPARTMENT OF TRANSPORTATION

DIVISION OF ENGINEERING SERVICES
ELECTRICAL-MECHANICAL-WATER AND WASTEWATER DESIGN

BRIDGE NO. 17M5717
POST MILE 15.9

NEVADA CITY MAINTENANCE STATION RESIDENT MECHANIC'S FACILITY

MODIFIED POWER SINGLE LINE DIAGRAM

SHEET EE0-8

DOES SD Imperial Rev. 9/02

ORIGINAL SCALE IN INCHES FOR REDUCED PLANS 0 1 2 3

CU 03225
EA 318001

DISREGARD PRINTS BEARING EARLIER REVISION DATES → 2/16/07 3/15/07 10/29/08

REVISION DATES (PRELIMINARY STAGE ONLY) SHEET OF

20-JAN-2010 14:12

ee0_08.dgn

DIST.	COUNTY	ROUTE	POST MILES TOTAL PROJECT	SHEET NO.	TOTAL SHEETS
03	Nev	5717		98	106

Christine H. Mamaril 10-29-08
REGISTERED ELECTRICAL ENGINEER DATE

REGISTERED PROFESSIONAL ENGINEER C.H. MAMARIL No. 12801 Exp. 9-30-10 ELEC STATE OF CALIFORNIA

1-26-09
PLANS APPROVAL DATE

The State of California or its officers or agents shall not be responsible for the accuracy or completeness of electronic copies of this plan sheet.

ACCESSIBILITY DESIGN APPROVAL STAMP
DOT / DES / OTA
03-318001
DISTRICT - EA
Reviewed by: YA WANG
Date: 10-27-08

CALIFORNIA STATE FIRE MARSHAL
APPROVED
Approval of this plan does not authorize or approve any omission or deviation from applicable regulations. Final approval is subject to field inspection. One set of approved plans shall be available on the project site at all times.
Reviewed by: JEFFREY SCHWARTZ
Approval date: 1/11/10

General Note:

A. Location of Overhead Door Operator and other accessories as shown is arbitrary only. Exact location will depend upon the Overhead Door furnished.

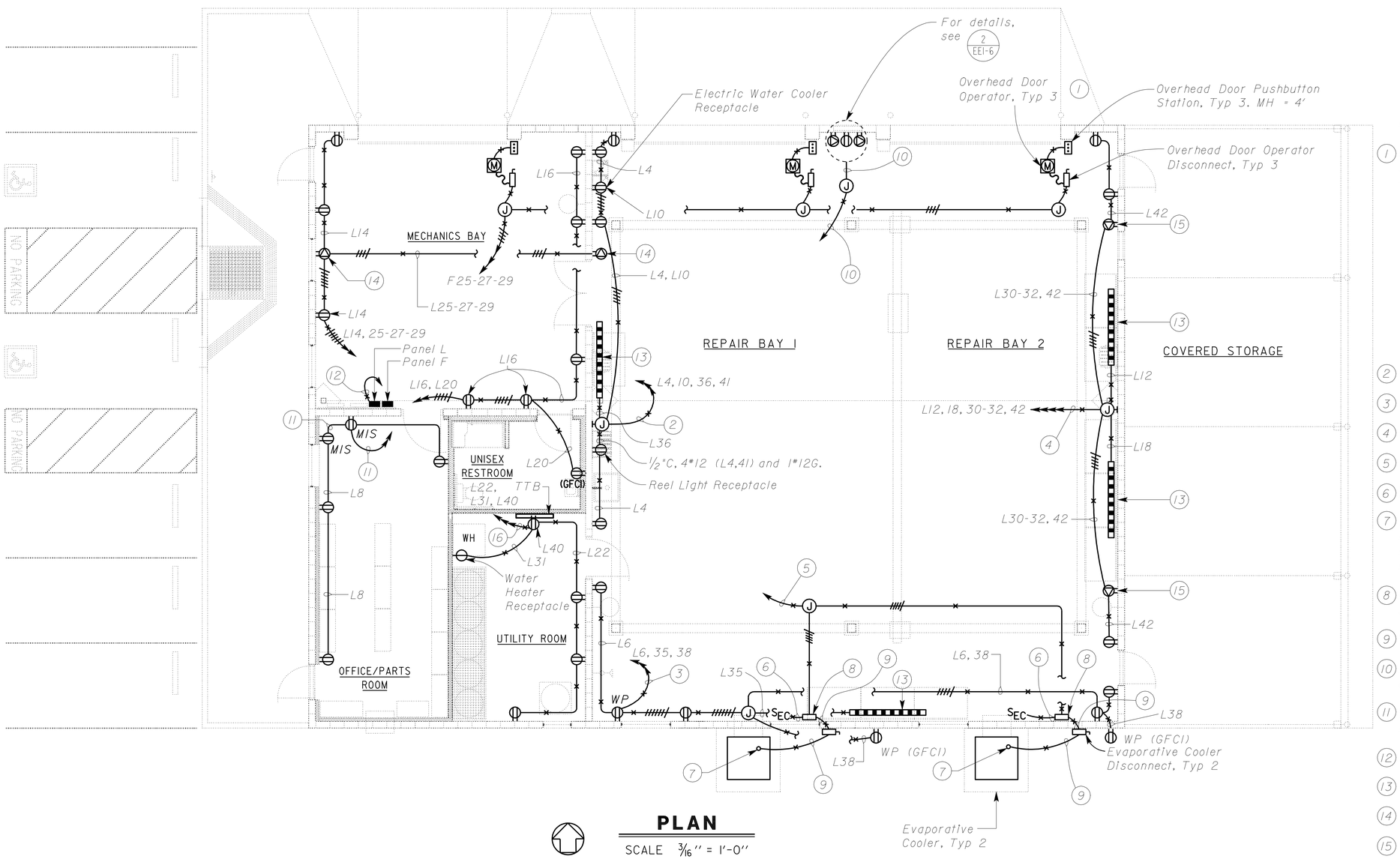

PLAN
SCALE 3/16" = 1'-0"

Notes:

1. Install the following for the overhead door operator system:
   - 1/2"C, 3*12 and 1*12G in between junction box and overhead door operator disconnect.
   - 1/2"C flexible metal conduit, 3*12 and 1*12G in between overhead door operator and overhead door operator disconnect.
   - 1/2"C, control conductors as required in between overhead door operator and overhead door pushbutton station.
   - 1/2"C, control cable as required in between overhead door operator and safety edge limit switch. Safety edge limit switch and its conduit are not shown on this Plan for clarity.
2. 3/4"C, 8*12 (L4, L10, 36, 41) and 1*12G.
3. 3/4"C, 6*12 (L6, 35, 38) and 1*12G.
4. 3/4"C, 8*12 (L12, 18, 30-32, 42) and 1*12G.
5. 3/4"C, 4*12 (F2-4-6) and 1*12G.
6. 1/2"C, 3*12 and 1*12G.
7. Terminate conduit with a "Type T" conduit fitting. Install 1/2"C, 2*12 and 1*12G to circulating pump motor WP receptacle and 1/2"C, 3*12 and 1*12G to blower motor.
8. Evaporative Cooler Starter. For schematic diagram, see 5 EE1-6
9. 1/2"C, 5*12 and 1*12G.
10. 1 1/2"C, 3*4 (L19-21-23), 2*6 (L26-28), 2*12 (L2), and 1*10G
11. 1/2"C, 4*12 (L8, 37), 1*12G, and 1*12 Insulated Ground for MIS Receptacles.
12. 2"C, 4*2/0 and 1*6G (F26-28-30) to Panel F.
13. Mount at 6 inches above work bench.
14. Three Phase Special Purpose Receptacle
15. Single Phase (208V) Special Purpose Receptacle.
16. 3/4"C, 6*12 (L22, 31, 40) and 1*12G.

THIS DRAWING ACCURATE FOR ELECTRICAL WORK ONLY

	BY	CHECKED
DESIGN	Joseph Abdelsayed	C.H. Mamaril
DETAILS	Joseph Abdelsayed	C.H. Mamaril
QUANTITIES	Joseph Abdelsayed	C.H. Mamaril

STATE OF CALIFORNIA
DEPARTMENT OF TRANSPORTATION

DIVISION OF ENGINEERING SERVICES
ELECTRICAL-MECHANICAL-WATER AND WASTEWATER DESIGN

BRIDGE NO. 17M5717
POST MILE 15.9

NEVADA CITY MAINTENANCE STATION
RESIDENT MECHANIC'S FACILITY
POWER PLAN I

SHEET **EE1-1**

DOES SD Imperial Rev. 9/02

ORIGINAL SCALE IN INCHES FOR REDUCED PLANS 0 1 2 3

CU 03225
EA 318001

DISREGARD PRINTS BEARING EARLIER REVISION DATES → 3/14/07 6/19/07 8/15/07 10/24/07 10/29/08

REVISION DATES (PRELIMINARY STAGE ONLY) SHEET OF

20-JAN-2010 14:12

ee1_01.dgn

DIST.	COUNTY	ROUTE	POST MILES TOTAL PROJECT	SHEET NO.	TOTAL SHEETS
03	Nev	5717		99	106

Christine H. Mamaril 10-29-08
REGISTERED ELECTRICAL ENGINEER DATE

REGISTERED PROFESSIONAL ENGINEER C.H. MAMARIL No. 12801 Exp. 9-30-10 ELEC STATE OF CALIFORNIA

1-26-09
PLANS APPROVAL DATE

The State of California or its officers or agents shall not be responsible for the accuracy or completeness of electronic copies of this plan sheet.

ACCESSIBILITY DESIGN APPROVAL STAMP
DOT / DES / OTA
03-318001
DISTRICT - EA
Reviewed by: YA WANG
Date: 10-27-08

CALIFORNIA STATE FIRE MARSHAL
APPROVED
Approval of this plan does not authorize or approve any omission or deviation from applicable regulations. Final approval is subject to field inspection. One set of approved plans shall be available on the project site at all times.
Reviewed by: JEFFREY SCHWARTZ
Approval date: 1/11/10

General Note:

General wiring and conduit system layout for the Hose Reel and Exhaust Evacuation Fan system as shown is arbitrary only. Exact conduit and wiring system layout will depend upon the equipment furnished.

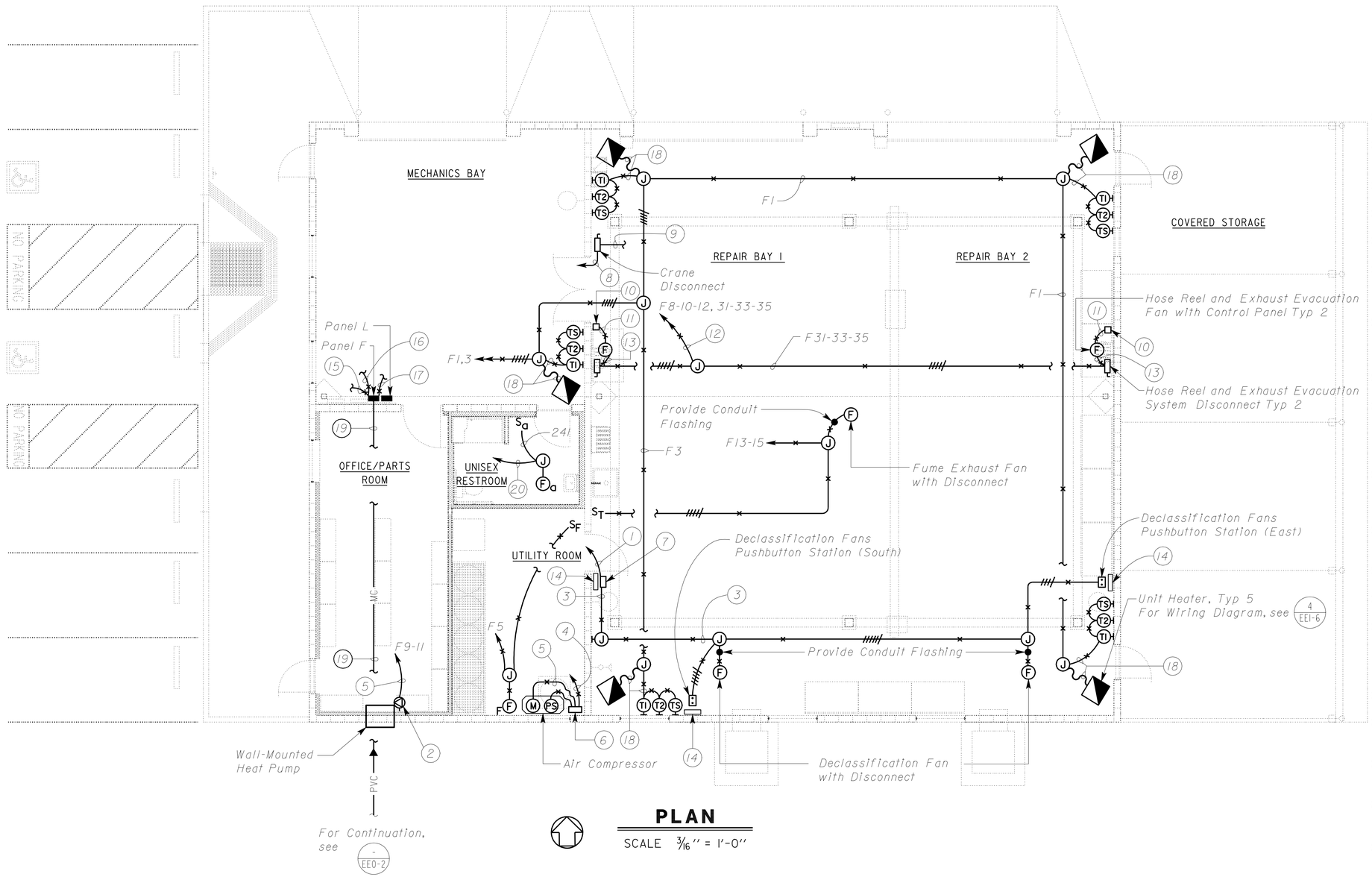

PLAN
SCALE 3/16" = 1'-0"

Notes:

1. 3/4"C, 3#10 (F17-19) and 1#10G.
2. Heat Pump Receptacle. Exact location and mounting height of receptacle to suit unit furnished.
3. 3/4"C, 7#12 and 1#12G.
4. 3/4"C, 3#8 (F14-16-18) and 1#10G.
5. 3/4"C, 3#10 and 1#10G.
6. Air Compressor Starter. For Schematic Diagram, see 3 / EEI-6
7. Declassification Fans Control Panel. For Schematic Diagram, see 1 / EEI-6
8. 3/4"C, 4#10 (F20-22-24) and 1#10G.
9. 3/4"C, 4#10 (F20-22-24) and 1#10G. Terminate conduit and conductors at the crane conductor bar system as recommended by the Crane manufacturer.
10. Control Station/Control Panel provided by Hose Reel and Exhaust Evacuation Fan manufacturer. Wire as required.
11. 1/2"C, control conductors to suit control station/control panel furnished.
12. 3/4"C, 8#12, 1#12G
13. 1/2"C, 4#12, 1#12G.
14. Declassification Fans Warning Sign. Inscription shall read: "BEFORE REPAIRING GASOLINE POWERED VEHICLES, ENERGIZE DECLASSIFICATION FANS."
15. 1"C, 1#1/0G to Ground Bar.
16. 1 1/2"C, 1#1/0G without splices. Bond to interior gas pipe and structural steel column.
17. 1 1/2"C, 1#1/0G without splices. Bond to interior air and water pipes.
18. Control Conductors to suit Temperature Actuated Switches and Unit Heater Furnished.
19. 4"C, 4#350, 1#3/0G.
20. 3/4"C, 4#12 (Conductors 241, N24, 71 and N7) and 1#12G to Indoor Lighting Control Panel.

THIS DRAWING ACCURATE FOR ELECTRICAL WORK ONLY

	BY	CHECKED
DESIGN	Joseph Abdelsayed	C.H. Mamaril
DETAILS	Joseph Abdelsayed	C.H. Mamaril
QUANTITIES	Joseph Abdelsayed	C.H. Mamaril

STATE OF CALIFORNIA
DEPARTMENT OF TRANSPORTATION

DIVISION OF ENGINEERING SERVICES
ELECTRICAL-MECHANICAL-WATER AND WASTEWATER DESIGN

BRIDGE NO. 17M5717
POST MILE 15.9

NEVADA CITY MAINTENANCE STATION RESIDENT MECHANIC'S FACILITY
POWER PLAN 2

SHEET **EE1-2**

DOES SD Imperial Rev. 9/02

ORIGINAL SCALE IN INCHES FOR REDUCED PLANS 0 1 2 3

CU 03225
EA 318001

DISREGARD PRINTS BEARING EARLIER REVISION DATES → 3/14/07 6/19/07 8/8/07 10/24/07 10/29/08

REVISION DATES (PRELIMINARY STAGE ONLY) SHEET OF

20-JAN-2010 14:12

ee1_02.dgn

DIST.	COUNTY	ROUTE	POST MILES TOTAL PROJECT	SHEET NO.	TOTAL SHEETS
03	Nev	5717		100	106

Christine H. Mamaril 10-29-08
REGISTERED ELECTRICAL ENGINEER DATE

REGISTERED PROFESSIONAL ENGINEER C.H. MAMARIL No. 12801 Exp. 9-30-10 ELEC STATE OF CALIFORNIA

1-26-09
PLANS APPROVAL DATE

The State of California or its officers or agents shall not be responsible for the accuracy or completeness of electronic copies of this plan sheet.

ACCESSIBILITY DESIGN APPROVAL STAMP
DOT / DES / OTA
03-318001
DISTRICT - EA
Reviewed by: YA WANG
Date: 10-27-08

CALIFORNIA STATE FIRE MARSHAL APPROVED
Approval of this plan does not authorize or approve any omission or deviation from applicable regulations. Final approval is subject to field inspection. One set of approved plans shall be available on the project site at all times.
Reviewed by: JEFFREY SCHWARTZ
Approval date: 1/11/10

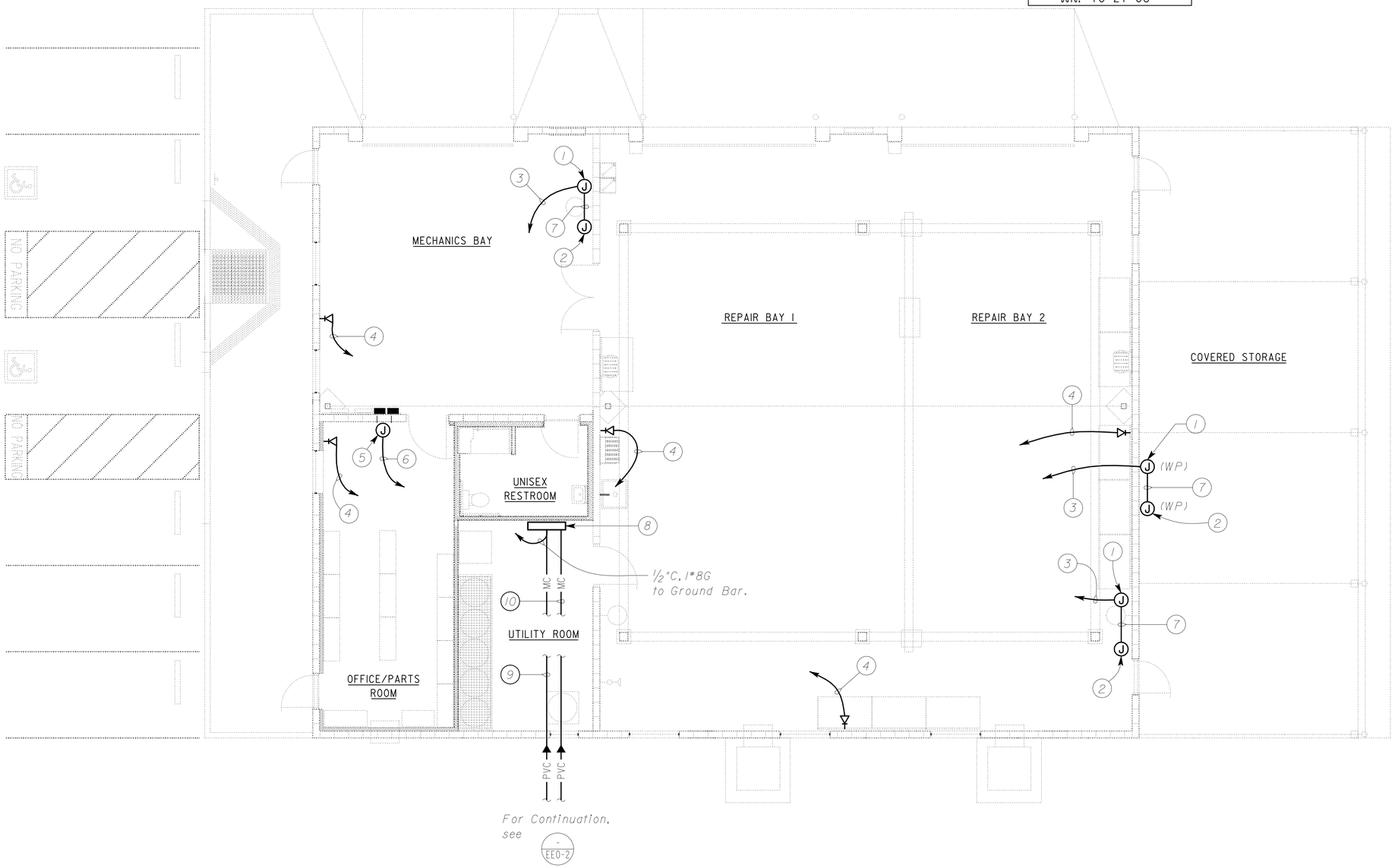

PLAN

SCALE 3/16" = 1'-0"

Notes:

1. 4" x 4" Junction Box for future wall-mounted speaker. Mount Junction Box at 8' above floor.
2. 2" x 4" Junction Box for future speaker volume control. Mount Junction Box directly below Junction Box for future wall-mounted speaker at 3'-4" above floor.
3. 3/4"C, 1 Speaker Cable to TTB.
4. 3/4"C, Pull Rope to TTB.
5. Junction Box for future Radio Console. Mount Junction Box at 2'-6" above finished floor.
6. 1 1/2"C, 25 Pair Cable to TTB.
7. 3/4"C, 1 Speaker Cable.
8. 4' X 4' Plywood for TTB.
9. 3"C, 50 pair telephone cable.
10. (2) 3"C, Mule Tape.

THIS DRAWING ACCURATE FOR ELECTRICAL WORK ONLY

	BY	CHECKED
DESIGN	Joseph Abdelsayed	C.H. Mamaril
DETAILS	Joseph Abdelsayed	C.H. Mamaril
QUANTITIES	Joseph Abdelsayed	C.H. Mamaril

STATE OF CALIFORNIA
DEPARTMENT OF TRANSPORTATION

DIVISION OF ENGINEERING SERVICES
ELECTRICAL-MECHANICAL-WATER AND WASTEWATER DESIGN

BRIDGE NO. 17M5717
POST MILE 15.9

NEVADA CITY MAINTENANCE STATION RESIDENT MECHANIC'S FACILITY
COMMUNICATION PLAN

SHEET **EE1-3**

DOES SD Imperial Rev. 9/02

ORIGINAL SCALE IN INCHES FOR REDUCED PLANS 0 1 2 3

CU 03225
EA 318001

DISREGARD PRINTS BEARING EARLIER REVISION DATES → 7/11/07 8/8/07 10/24/07 10/29/08

REVISION DATES (PRELIMINARY STAGE ONLY) SHEET OF

20-JAN-2010 14:13
ee1_03.dgn

DIST.	COUNTY	ROUTE	POST MILES TOTAL PROJECT	SHEET NO.	TOTAL SHEETS
03	Nev	5717		101	106

Christine H. Mamaril 10-29-08
REGISTERED ELECTRICAL ENGINEER DATE

REGISTERED PROFESSIONAL ENGINEER C.H. MAMARIL No. 12801 Exp. 9-30-10 ELEC STATE OF CALIFORNIA

1-26-09
PLANS APPROVAL DATE

The State of California or its officers or agents shall not be responsible for the accuracy or completeness of electronic copies of this plan sheet.

ACCESSIBILITY DESIGN APPROVAL STAMP
DOT / DES / OTA
03-318001
DISTRICT - EA
Reviewed by: YA WANG
Date: 10-27-08

CALIFORNIA STATE FIRE MARSHAL APPROVED
Approval of this plan does not authorize or approve any omission or deviation from applicable regulations. Final approval is subject to field inspection. One set of approved plans shall be available on the project site at all times.
Reviewed by: JEFFREY SCHWARTZ
Approval date: 1/11/10

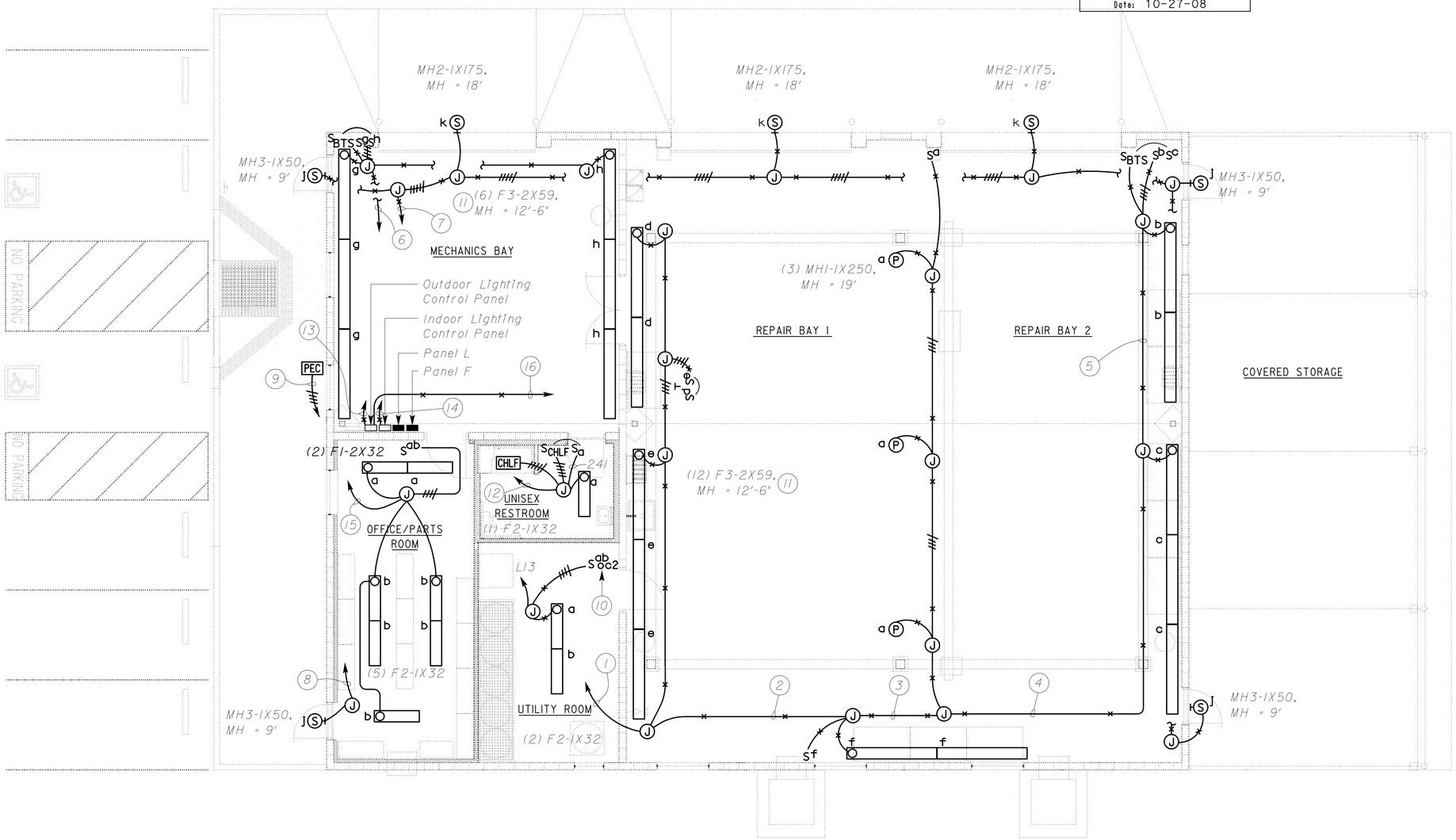

PLAN

SCALE 3/16" = 1'-0"

Notes:

1. 1"C, 10#12 (Conductor Numbers 2, L1, 11, N1, 31, N3, 51, N5, 71, and N7) and 1#12G to Indoor Lighting Control Panel. For Schematic Diagram, see 1/EE1-5
2. 3/4"C, 8#12 (Conductor Numbers 2, L1, 31, N3, 51, N5, 71, and N7) and 1#12G.
3. 3/4"C, 6#12 (Conductor Numbers 2, L1, 31, N3, 51, and N5) and 1#12G.
4. 3/4"C, 4#12 (Conductor Numbers 2, L1, 31, N3) and 1#12G.
5. 3/4"C, 5#12 (Conductor Numbers 2, L1, 31, N3, and switched 31) and 1#12G.
6. 3/4"C, 4#12 (2, L1, 91, N9) and 1#12G to Indoor Lighting Control Panel.
7. 1/2"C, 4#12 (151, N15, 171, and N17) and 1#12G to Outdoor Lighting Control Panel. For Schematic Diagram, see 2/EE1-5
8. Conductor Numbers 151 and N15 to Outdoor Lighting Control Panel.
9. To Outdoor Lighting Control Panel.
10. For Wall Motion Sensor Switch Wiring Diagram, see 3/EE1-5
11. For Mounting Details, see 4/EE1-5
12. 3/4" C, 4#12 (Conductors 241, N24, 71, and N7) and 1#12G to Indoor Lighting Control Panel.
13. 3/4"C, 4#12 (L15, 17) and 1#12G to Panel L.
14. 3/4"C, 10#12 (L1, 3, 5, 7, 9) and 1#12G to Panel L.
15. 1/2"C, 2#12 (Conductors 111 and N11) and 1#12G to Indoor Lighting Control Panel.
16. 1"C, 2#10 (Conductors 391 and N39) and 1#10G. For continuation, see -/EE0-2

THIS DRAWING ACCURATE FOR ELECTRICAL WORK ONLY

	BY	CHECKED
DESIGN	Joseph Abdelsayed	C.H. Mamaril
DETAILS	Joseph Abdelsayed	C.H. Mamaril
QUANTITIES	Joseph Abdelsayed	C.H. Mamaril

STATE OF CALIFORNIA
DEPARTMENT OF TRANSPORTATION

DIVISION OF ENGINEERING SERVICES
ELECTRICAL-MECHANICAL-WATER AND WASTEWATER DESIGN

BRIDGE NO. 17M5717
POST MILE 15.9

NEVADA CITY MAINTENANCE STATION
RESIDENT MECHANIC'S FACILITY
LIGHTING PLAN

SHEET **EE1-4**

DOES SD Imperial Rev. 9/02

ORIGINAL SCALE IN INCHES FOR REDUCED PLANS 0 1 2 3

CU 03225
EA 318001

DISREGARD PRINTS BEARING EARLIER REVISION DATES → 7/11/07 8/15/07 10/24/07 10/29/08

REVISION DATES (PRELIMINARY STAGE ONLY) SHEET OF

20-JAN-2010 14:13

ee1_04.dgn

DIST.	COUNTY	ROUTE	POST MILES TOTAL PROJECT	SHEET NO.	TOTAL SHEETS
03	Nev	5717		102	106

Christine H. Mamaril 10-29-08
REGISTERED ELECTRICAL ENGINEER DATE

REGISTERED PROFESSIONAL ENGINEER C.H. MAMARIL No. 12801 Exp. 9-30-10 ELEC STATE OF CALIFORNIA

1-26-09
PLANS APPROVAL DATE

The State of California or its officers or agents shall not be responsible for the accuracy or completeness of electronic copies of this plan sheet.

CALIFORNIA STATE FIRE MARSHAL APPROVED
Approval of this plan does not authorize or approve any omission or deviation from applicable regulations. Final approval is subject to field inspection. One set of approved plans shall be available on the project site at all times.
Reviewed by: JEFFREY SCHWARTZ
Approval date: 1/11/10

ACCESSIBILITY DESIGN APPROVAL STAMP
DOT / DES / OTA
03-318001
DISTRICT - EA
Reviewed by: YA WANG
Date: 10-27-08

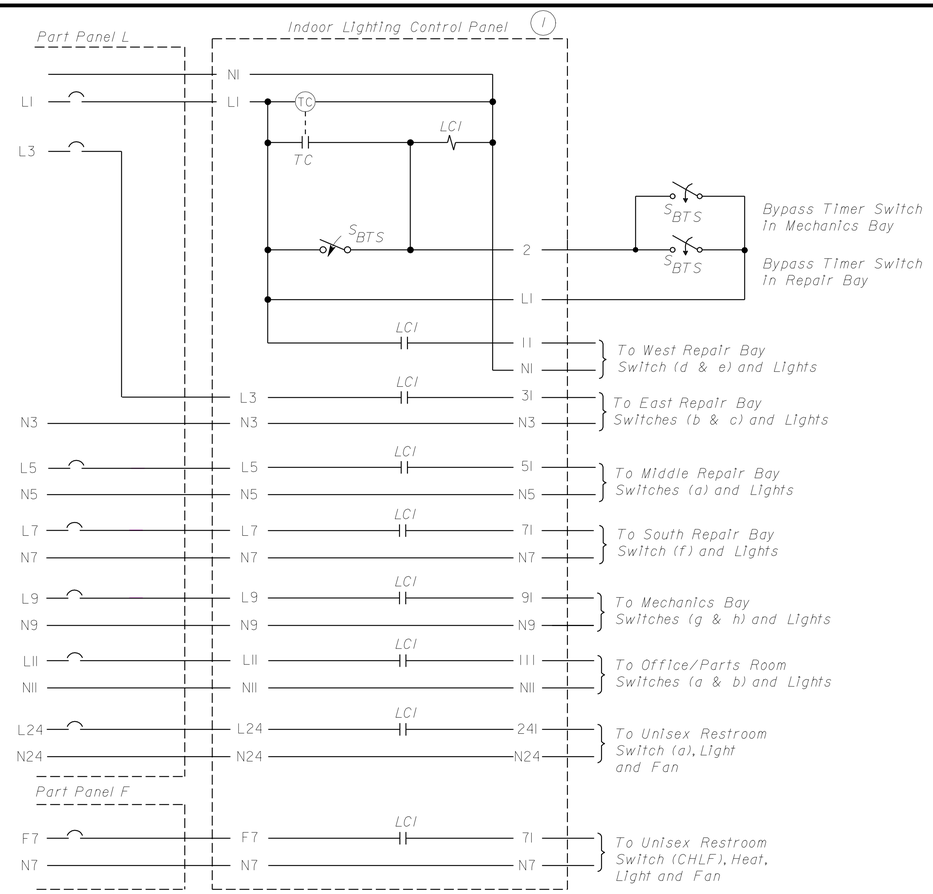

1 INDOOR LIGHTING CONTROL PANEL SCHEMATIC DIAGRAM

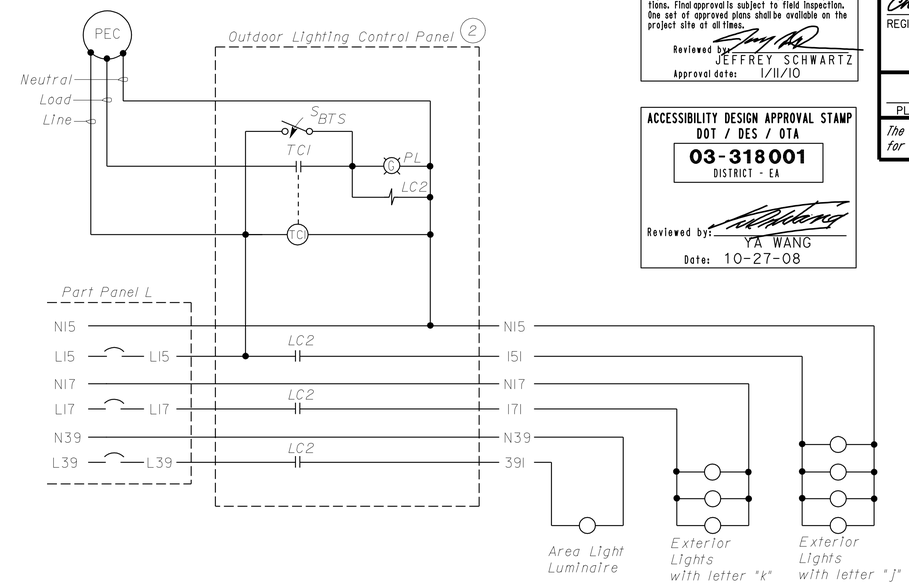

2 OUTDOOR LIGHTING CONTROL PANEL SCHEMATIC DIAGRAM

Notes:

1. Install a "Warning" sign on exterior door of panel. Sign shall read, "Disconnect Circuits 1, 3, 5, 7, 9, 11, and 24 in Panel L, and Circuit 7 in Panel F to deenergize Control Panel"
2. Install a "Warning" sign on exterior door of panel. Sign shall read, "Disconnect Circuits 15, 17, and 39 in Panel L to deenergize Control Panel"

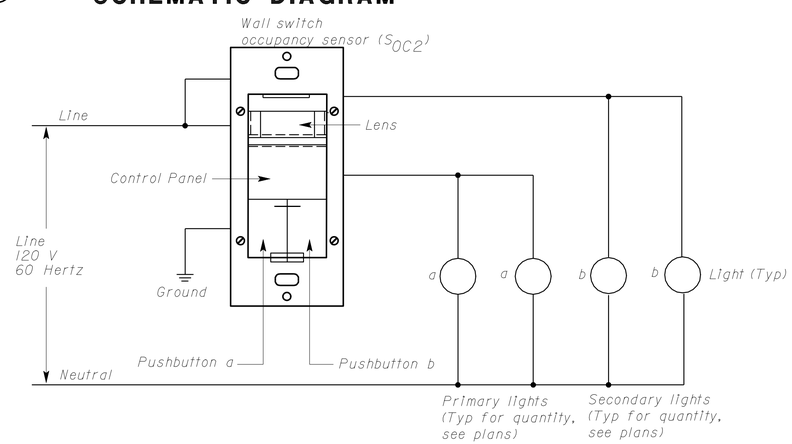

3 MOTION SENSOR WALL SWITCH WALL DIAGRAM

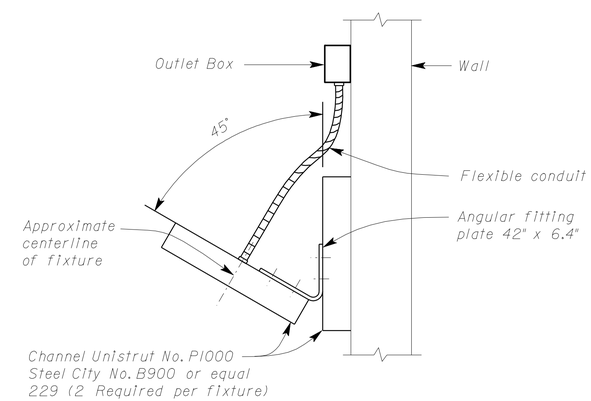

4 TYPE F3 FIXTURE MOUNTING DETAIL

NO SCALE

THIS DRAWING ACCURATE FOR ELECTRICAL WORK ONLY

	BY	CHECKED
DESIGN	Joseph Abdelsayed	C.H. Mamaril
DETAILS	Joseph Abdelsayed	C.H. Mamaril
QUANTITIES	Joseph Abdelsayed	C.H. Mamaril

STATE OF CALIFORNIA DEPARTMENT OF TRANSPORTATION

DIVISION OF ENGINEERING SERVICES
ELECTRICAL-MECHANICAL-WATER AND WASTEWATER DESIGN

BRIDGE NO. 17M5717
POST MILE 15.9

NEVADA CITY MAINTENANCE STATION RESIDENT MECHANIC'S FACILITY
LIGHTING SCHEMATIC DIAGRAMS AND DETAILS

SHEET **EE1-5**

DOES SD Imperial Rev. 9/02

ORIGINAL SCALE IN INCHES FOR REDUCED PLANS 0 1 2 3

CU 03225
EA 318001

DISREGARD PRINTS BEARING EARLIER REVISION DATES →
REVISION DATES (PRELIMINARY STAGE ONLY) 7/11/07 8/9/07 10/25/07 10/29/08
SHEET OF

20-JAN-2010 14:13
ee1_05.dgn

DIST.	COUNTY	ROUTE	POST MILES TOTAL PROJECT	SHEET NO.	TOTAL SHEETS
03	Nev	5717		103	106

Christine H. Mamaril 10-29-08
REGISTERED ELECTRICAL ENGINEER DATE

REGISTERED PROFESSIONAL ENGINEER C.H. MAMARIL No. 12801 Exp. 9-30-10 ELEC STATE OF CALIFORNIA

1-26-09
PLANS APPROVAL DATE

The State of California or its officers or agents shall not be responsible for the accuracy or completeness of electronic copies of this plan sheet.

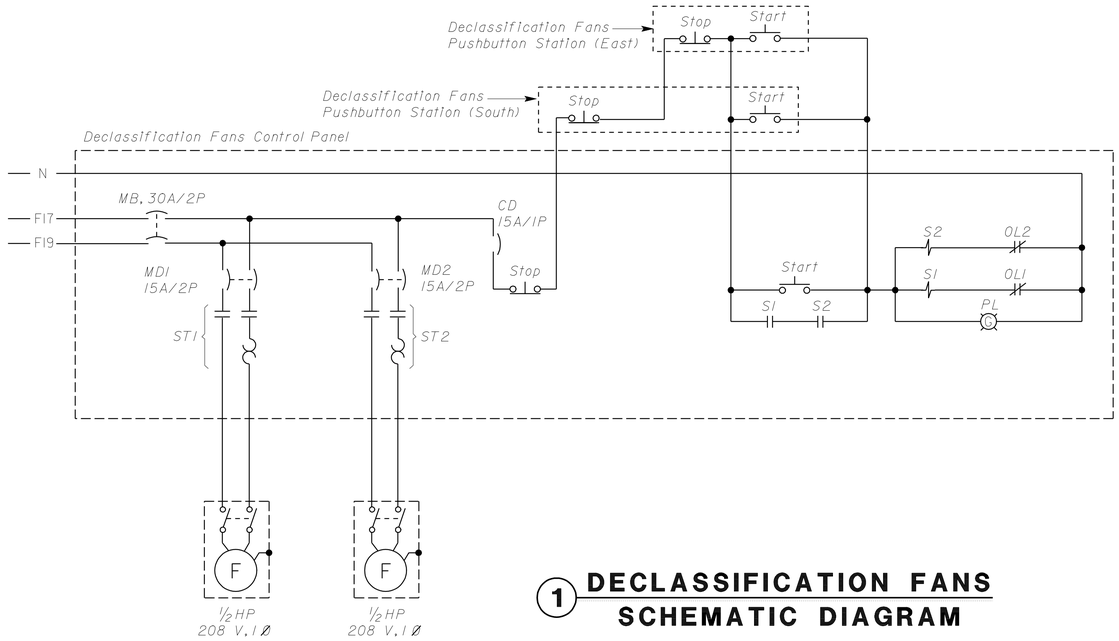

1 DECLASSIFICATION FANS SCHEMATIC DIAGRAM

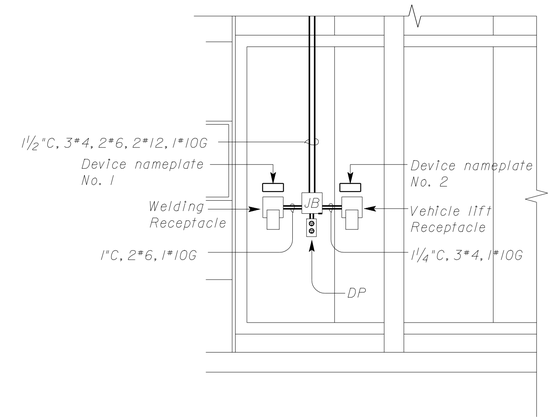

DEVICE NAMEPLATE	
No. 1	208 V, 60 A, SINGLE-PHASE, WELDER
No. 2	208 V, 60 A, 3-PHASE, VEHICLE LIFT

2 ELEVATION
NO SCALE

CALIFORNIA STATE FIRE MARSHAL APPROVED
Approval of this plan does not authorize or approve any omission or deviation from applicable regulations. Final approval is subject to field inspection. One set of approved plans shall be available on the project site at all times.
Reviewed by: JEFFREY SCHWARTZ
Approval date: 1/11/10

ACCESSIBILITY DESIGN APPROVAL STAMP DOT / DES / OTA
03-318001
DISTRICT - EA
Reviewed by: YA WANG
Date: 10-27-08

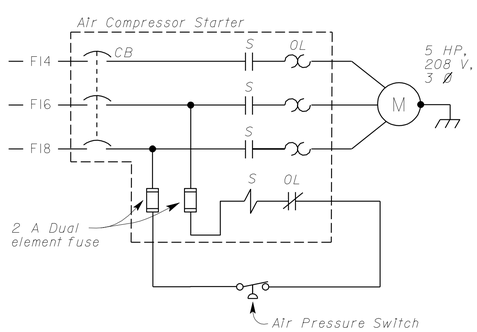

3 AIR COMPRESSOR SCHEMATIC DIAGRAM

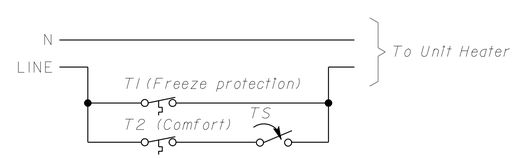

4 UNIT HEATER SCHEMATIC DIAGRAM

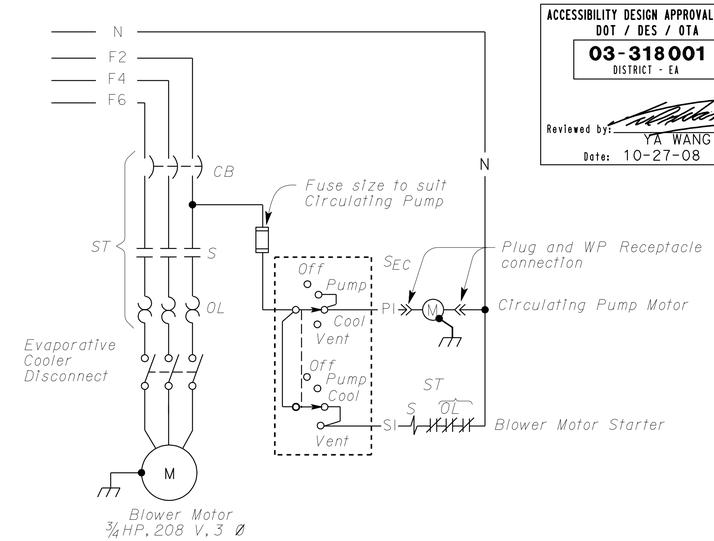

5 EVAPORATIVE COOLER SCHEMATIC DIAGRAM

Connection for Southwest Side (Repair Bay) Evaporative Cooler is shown.
Connection for Southeast Side (Repair Bay) Evaporative Cooler is similar.

THIS DRAWING ACCURATE FOR ELECTRICAL WORK ONLY

	BY	CHECKED
DESIGN	Joseph Abdelsayed	C.H. Mamaril
DETAILS	Joseph Abdelsayed	C.H. Mamaril
QUANTITIES	Joseph Abdelsayed	C.H. Mamaril

STATE OF CALIFORNIA
DEPARTMENT OF TRANSPORTATION

DIVISION OF ENGINEERING SERVICES
ELECTRICAL-MECHANICAL-WATER AND WASTEWATER DESIGN

BRIDGE NO. 17M5717
POST MILE 15.9

NEVADA CITY MAINTENANCE STATION RESIDENT MECHANIC'S FACILITY
POWER SCHEMATIC DIAGRAMS AND DETAILS

SHEET EE1-6

DOES SD Imperial Rev. 9/02

ORIGINAL SCALE IN INCHES FOR REDUCED PLANS 0 1 2 3

CU 03225
EA 318001

DISREGARD PRINTS BEARING EARLIER REVISION DATES
REVISION DATES (PRELIMINARY STAGE ONLY) 7/9/07 8/9/07 10/25/07 10/29/08
SHEET OF

20-JAN-2010 14:13
ee1_06.dgn

DIST.	COUNTY	ROUTE	POST MILES TOTAL PROJECT	SHEET NO.	TOTAL SHEETS
03	Nev	5717		104	106

ACCESSIBILITY DESIGN APPROVAL STAMP
DOT / DES / OTA
03-318001
DISTRICT - EA
Reviewed by: YA WANG
Date: 10-27-08

CALIFORNIA STATE FIRE MARSHAL
APPROVED
Approval of this plan does not authorize or approve any omission or deviation from applicable regulations. Final approval is subject to field inspection. One set of approved plans shall be available on the project site at all times.
Reviewed by: JEFFREY SCHWARTZ
Approval date: 1/11/10

Christine H. Mamaril 10-29-08
REGISTERED ELECTRICAL ENGINEER DATE

REGISTERED PROFESSIONAL ENGINEER
C.H. MAMARIL
No. 12801
Exp. 9-30-10
ELEC
STATE OF CALIFORNIA

1-26-09
PLANS APPROVAL DATE

The State of California or its officers or agents shall not be responsible for the accuracy or completeness of electronic copies of this plan sheet.

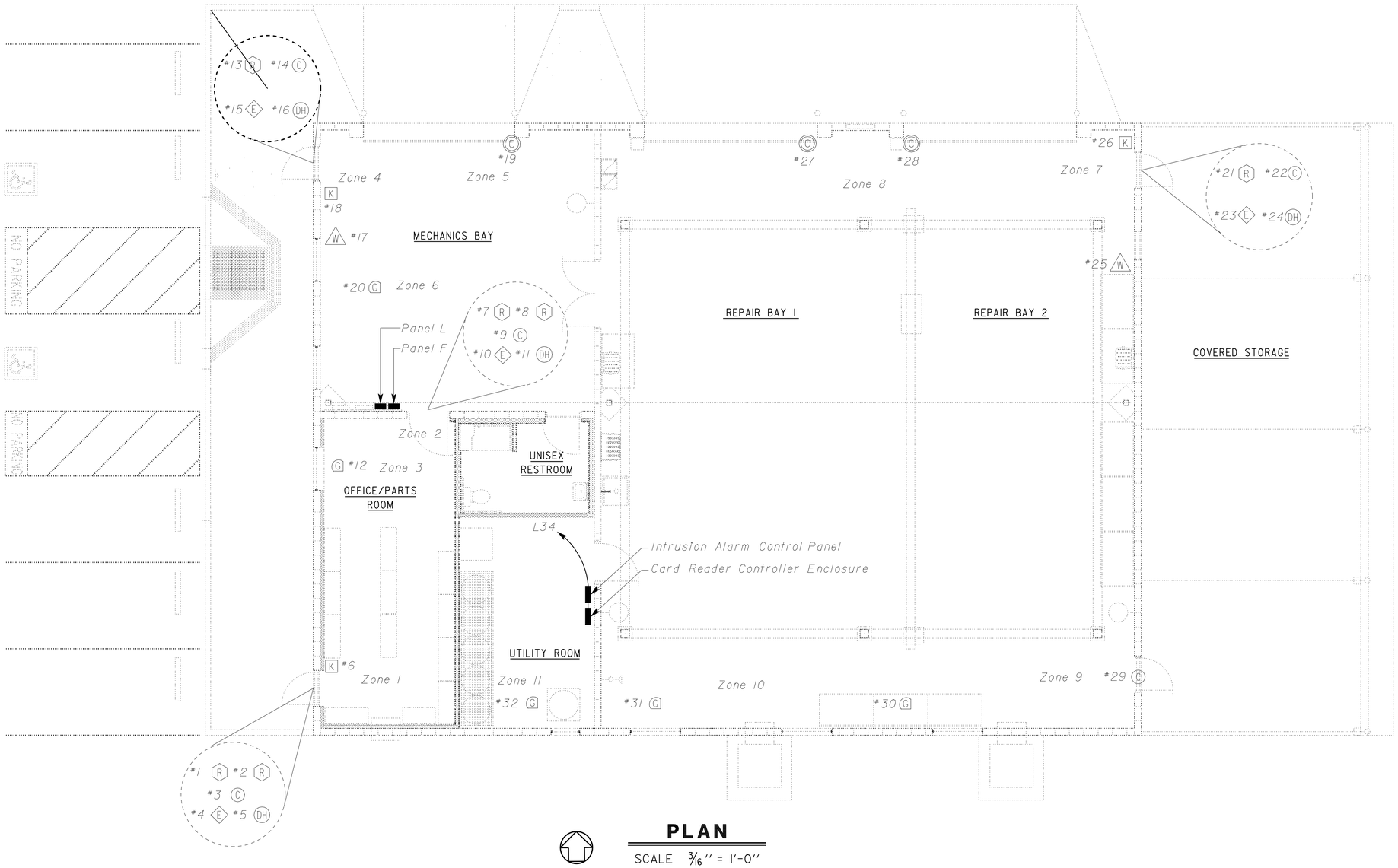

PLAN
SCALE 3/16" = 1'-0"

General Notes:

A. *Conduit and Conductor System for Intrusion Alarm System is not shown. See Special Provisions for requirements.*

B. *Submit conduit and conductor layout for approval prior to installation.*

THIS DRAWING ACCURATE FOR ELECTRICAL WORK ONLY

	BY	CHECKED
DESIGN	Joseph Abdelsayed	C.H. Mamaril
DETAILS	Joseph Abdelsayed	C.H. Mamaril
QUANTITIES	Joseph Abdelsayed	C.H. Mamaril

STATE OF CALIFORNIA
DEPARTMENT OF TRANSPORTATION

DIVISION OF ENGINEERING SERVICES
ELECTRICAL-MECHANICAL-WATER AND WASTEWATER DESIGN

BRIDGE NO. 17M5717
POST MILE 15.9

NEVADA CITY MAINTENANCE STATION RESIDENT MECHANIC'S FACILITY

INTRUSION ALARM SYSTEM

SHEET **EE1-7**

DOES SD Imperial Rev. 9/02

ORIGINAL SCALE IN INCHES FOR REDUCED PLANS 0 1 2 3

CU 03225
EA 318001

DISREGARD PRINTS BEARING EARLIER REVISION DATES → 9/12/07 10/25/07 10/29/08

REVISION DATES (PRELIMINARY STAGE ONLY) SHEET OF

20-JAN-2010 14:14

ee1_07.dgn

ACCESSIBILITY DESIGN APPROVAL STAMP
DOT / DES / OTA
03-318001
DISTRICT - EA
Reviewed by: YA WANG
Date: 10-27-08

CALIFORNIA STATE FIRE MARSHAL
APPROVED
Approval of this plan does not authorize or approve any omission or deviation from applicable regulations. Final approval is subject to field inspection. One set of approved plans shall be available on the project site at all times.
Reviewed by: JEFFREY SCHWARTZ
Approval date: 1/11/10

DIST.	COUNTY	ROUTE	POST MILES TOTAL PROJECT	SHEET NO.	TOTAL SHEETS
03	Nev	5717		105	106

Christine H. Mamaril 10-29-08
REGISTERED ELECTRICAL ENGINEER DATE

REGISTERED PROFESSIONAL ENGINEER
C.H. MAMARIL
No. 12801
Exp. 9-30-10
ELEC
STATE OF CALIFORNIA

1-26-09
PLANS APPROVAL DATE

The State of California or its officers or agents shall not be responsible for the accuracy or completeness of electronic copies of this plan sheet.

ZONE	LOCATION	QUANTITY	DEVICES DESCRIPTION	ITEM NUMBER
1	SINGLE PEDESTRIAN ACCESS DOOR INTO OFFICE/PARTS ROOM	2	DIGITAL CARD READERS	#1, #2
		1	MAGNETIC CONTACT SWITCH-PEDESTRIAN	#3
		1	ELECTRIFIED LOCK SET	#4
		1	POWER TRANSFER DOOR HINGE	#5
		1	DIGITAL KEYPAD, NOTE 1	#6
2	SINGLE PEDESTRIAN ACCESS DOOR INTO OFFICE/PARTS ROOM	2	DIGITAL CARD READERS	#7, #8
		1	MAGNETIC CONTACT SWITCH-PEDESTRIAN	#9
		1	ELECTRIFIED LOCK SET	#10
		1	POWER TRANSFER DOOR HINGE	#11
3	OFFICE/PARTS ROOM AREA	1	GLASS BREAK DISCRIMINATOR	#12
4	SINGLE PEDESTRIAN ACCESS DOOR INTO MECHANICS BAY	1	DIGITAL CARD READER	#13
		1	MAGNETIC CONTACT SWITCH-PEDESTRIAN	#14
		1	ELECTRIFIED LOCK SET	#15
		1	POWER TRANSFER DOOR HINGE	#16
		1	COMBINATION MOTION DETECTOR	#17
		1	DIGITAL KEYPAD, NOTE 1	#18
5	OVERHEAD VEHICLE ACCESS DOOR INTO MECHANICS BAY	1	MAGNETIC CONTACT SWITCH-OVERHEAD VEHICLE GARAGE	#19
6	MECHANICS BAY AREA	1	GLASS BREAK DISCRIMINATOR	#20
7	SINGLE PEDESTRIAN ACCESS DOOR INTO REPAIR BAY	1	DIGITAL CARD READER	#21
		1	MAGNETIC CONTACT SWITCH-PEDESTRIAN	#22
		1	ELECTRIFIED LOCK SET	#23
		1	POWER TRANSFER DOOR HINGE	#24
		1	COMBINATION MOTION DETECTOR	#25
		1	DIGITAL KEYPAD, NOTE 1	#26
8	OVERHEAD VEHICLE ACCESS DOORS (2) INTO REPAIR BAY	2	MAGNETIC CONTACT SWITCHES-OVERHEAD VEHICLE GARAGE	#27, #28
9	SINGLE PEDESTRIAN ACCESS DOOR INTO REPAIR BAY	1	MAGNETIC CONTACT SWITCH-PEDESTRIAN	#29
10	REPAIR BAY AREA	2	GLASS BREAK DISCRIMINATORS	#30, #31
11	UTILITY ROOM AREA	1	GLASS BREAK DISCRIMINATOR	#32

Note:

(1) *Digital keypad shall be programmed to de-activate the intrusion reporting devices within a zone during normal working hours through the use of an identifying code entered by employees after access has been granted via the access control devices. For example, Keypad #27 shall de-activate devices #22 through #25, all in Zone 8.*

	BY	CHECKED
DESIGN	Joseph Abdelsayed	C.H. Mamaril
DETAILS	Joseph Abdelsayed	C.H. Mamaril
QUANTITIES	Joseph Abdelsayed	C.H. Mamaril

STATE OF CALIFORNIA
DEPARTMENT OF TRANSPORTATION

DIVISION OF ENGINEERING SERVICES
ELECTRICAL-MECHANICAL-WATER AND WASTEWATER DESIGN

BRIDGE NO. 17M5717
POST MILE 15.9

NEVADA CITY MAINTENANCE STATION RESIDENT MECHANIC'S FACILITY

INTRUSION ALARM SCHEDULE

SHEET EE1-8

DOES SD Imperial Rev. 9/02

ORIGINAL SCALE IN INCHES FOR REDUCED PLANS 0 1 2 3

CU 03225
EA 318001

DISREGARD PRINTS BEARING EARLIER REVISION DATES → 9/12/07 10/25/07 10/29/08

REVISION DATES (PRELIMINARY STAGE ONLY) SHEET OF

20-JAN-2010 14:14

ee1_08.dgn

DIST.	COUNTY	ROUTE	POST MILES TOTAL PROJECT	SHEET NO.	TOTAL SHEETS
03	Nev	5717		106	106

ACCESSIBILITY DESIGN APPROVAL STAMP
DOT / DES / OTA
03-318001
DISTRICT - EA
Reviewed by: YA WANG
Date: 10-27-08

CALIFORNIA STATE FIRE MARSHAL
APPROVED
Approval of this plan does not authorize or approve any omission or deviation from applicable regulations. Final approval is subject to field inspection. One set of approved plans shall be available on the project site at all times.
Reviewed by: JEFFREY SCHWARTZ
Approval date: 1/11/10

Christine H. Mamaril 10-29-08
REGISTERED ELECTRICAL ENGINEER DATE

REGISTERED PROFESSIONAL ENGINEER
C.H. MAMARIL
No. 12801
Exp. 9-30-10
ELEC
STATE OF CALIFORNIA

1-26-09
PLANS APPROVAL DATE

The State of California or its officers or agents shall not be responsible for the accuracy or completeness of electronic copies of this plan sheet.

MAIN: 300 A / 3P CB
VOLTS: 120/208 V, 3 Ø, 4-WIRE

PANEL F
(10,000 A SCCR, BOTTOM FEED)

FEEDER SIZE: 4#350 MCM, 1#3/0G
LOCATION: MECHANICS BAY

DESCRIPTION	AMPERES A	AMPERES B	AMPERES C	BRK	CKT	A B C	CKT	BRK	AMPERES A	AMPERES B	AMPERES C	DESCRIPTION
UNIT HEATERS: EAST REPAIR BAY	3			15/1	1		2		8			
UNIT HTRS: W REP BAY & MECH BAY		4		15/1	3		4	15/3		8		EVAP COOLERS: REPAIR BAY
UTILITY ROOM EXHAUST FAN			3	15/1	5		6				8	
COMBINATION HEAT, LIGHT, FAN (CHLF)	15			20/1	7		8		7			
HEAT PUMP RECEPTACLE		23		30/2	9		10	20/3		7		EXHAUST EVACUATION HOSE REEL & FAN - WEST REP BAY
			23		11		12				7	
FUME EXHAUST FAN	6			15/2	13		14		17			
		6			15		16	40/3		17		AIR COMPRESSOR
DECLASSIFICATION FANS			11	30/2	17		18				17	
	11				19		20		18			
SPACE		X			21		22	30/3		18		CRANE
			X		23		24				18	
OVERHEAD DOORS: REPAIR BAY & MECHANICS BAY	12			15/3	25		26					
		12			27		28	100/3				SPARE
			12		29		30					
EXHAUST EVACUATION HOSE REEL & FAN - EAST REP BAY	7			20/3	31		32		X			SPACE
		7			33		34			X		SPACE
			7		35		36				X	SPACE
SPACE	X				37		38		X			SPACE
SPACE		X			39		40			X		SPACE
SPACE			X		41		42				X	SPACE

150 A/3P
SUB-FEED CIRCUIT BREAKER
PANEL L

A	B	C	
104	102	106	TOTAL CONNECTED LOAD (AMPERES PER PHASE)

MAIN: 225 A, MAIN LUGS ONLY
VOLTS: 120/208, 3 Ø, 4-WIRE

PANEL L
(10,000 A SCCR, BOTTOM FEED)

LOCATION: MECHANICS BAY

DESCRIPTION	AMPERES A	AMPERES B	AMPERES C	BRK	CKT	A B C	CKT	BRK	AMPERES A	AMPERES B	AMPERES C	DESCRIPTION
LIGHTS: WEST REPAIR BAY	6			15/1	1		2	*20/1	5			RECEPTACLES: NORTH REPAIR BAY
LIGHTS: EAST REPAIR BAY		6		15/1	3		4	*20/1		5		RECEPTACLES: WEST REPAIR BAY
LIGHTS: MIDDLE REPAIR BAY			7	15/1	5		6	*20/1			5	RECEPTACLES: S & E REPAIR BAY
LIGHTS: SOUTH REPAIR BAY	3			15/1	7		8	20/1	6			RECEPTACLE: OFFICE/PARTS ROOM
LIGHTS: MECHANICS BAY		7		15/1	9		10	*20/1		5		RECEPTACLES: ELEC WATER COOLER
LIGHTS: OFFICE/PARTS ROOM			4	15/1	11		12	*20/1			9	MULTIOUTLET: NE REPAIR BAY
LIGHTS: UTILITY ROOM	1			15/1	13		14	*20/1	5			RECEPTACLES: WEST MECHANICS BAY
LIGHTS: W & E BUILDING EXTERIOR		6		15/1	15		16	*20/1		8		RECEPTACLES: EAST MECHANICS BAY
LIGHTS: NORTH BUILDING EXTERIOR			4	15/1	17		18	*20/1			9	MULTIOUTLET: SE REPAIR BAY
VEHICLE LIFT RECEPTACLE	30			60/3	19		20	20/1	2			RECEPTACLE: RESTROOM
		30			21		22	*20/1		6		RECEPTACLES: UTILITY ROOM
			30		23		24	20/1			4	RESTROOM FAN & LIGHT
SPEC PURPOSE REC: REP/MECH BAY	3			20/3	25		26	60/2	43			WELDING RECEPTACLE
		3			27		28			43		
			3		29		30	*20/2			3	SPEC PURPOSE REC: EAST REPAIR BAY
RECEPTACLE: HOT WATER HEATER	2			*20/1	31		32		3			
SPARE		X		20/1	33		34	20/1		2		INTRUSION ALARM SYSTEM
MULTIOUTLET: SOUTH REPAIR BAY			9	*20/1	35		36	*20/1			9	MULTIOUTLET: WEST REPAIR BAY
MIS RECEPTACLES: OFFICE/PARTS RM	3			20/1	37		38	20/1	3			RECEPTACLES: OUTSIDE S. REPAIR BAY
AREA LIGHT LUMINAIRE		3		20/1	39		40	*20/1		2		NETWORK EQUIPMENT RECEPTACLE
REEL LIGHT RECEPTACLE			2	*20/1	41		42	*20/1			5	RECEPTACLES: EAST REPAIR BAY

* GFCI TYPE CIRCUIT BREAKER

A	B	C	
115	126	103	TOTAL CONNECTED LOAD (AMPERES PER PHASE)

	BY	CHECKED
DESIGN	Joseph Abdelsayed	C.H. Mamaril
DETAILS	Joseph Abdelsayed	C.H. Mamaril
QUANTITIES	Joseph Abdelsayed	C.H. Mamaril

STATE OF CALIFORNIA
DEPARTMENT OF TRANSPORTATION

DIVISION OF ENGINEERING SERVICES
ELECTRICAL-MECHANICAL-WATER AND WASTEWATER DESIGN

BRIDGE NO. 17M5717
POST MILE 15.9

NEVADA CITY MAINTENANCE STATION RESIDENT MECHANIC'S FACILITY

PANEL F AND PANEL L SCHEDULES

SHEET EE1-9

DOES SD Imperial Rev. 9/02

ORIGINAL SCALE IN INCHES FOR REDUCED PLANS 0 1 2 3

CU 03225
EA 318001

DISREGARD PRINTS BEARING EARLIER REVISION DATES → 8/27/07 10/25/07

REVISION DATES (PRELIMINARY STAGE ONLY) SHEET OF

20-JAN-2010 14:14

ee1_09.dgn