INDEX OF PLANS

SHEET No.	DESCRIPTION
1	TITLE AND LOCATION MAP
2-3	TYPICAL CROSS SECTIONS
4-10	CONSTRUCTION DETAILS
11-12	CONSTRUCTION AREA SIGNS
13	TRAFFIC HANDLING PLAN
14-36	DETOUR PLANS
37-38	PAVEMENT DELINEATION QUANTITIES
39-43	SIGN PLAN, DETAILS AND QUANTITIES
44-48	SUMMARY OF QUANTITIES
49-50	ELECTRICAL PLANS
51-77	REVISED AND NEW STANDARD PLANS
STRUCTURE PLANS	
78-87	ROUTE 5 BRIDGES

THE STANDARD PLANS LIST APPLICABLE TO THIS CONTRACT IS INCLUDED IN THE NOTICE TO BIDDERS AND SPECIAL PROVISIONS BOOK.

STATE OF CALIFORNIA

DEPARTMENT OF TRANSPORTATION

IM-0057(094)E

Dist	COUNTY	ROUTE	POST MILES TOTAL PROJECT	SHEET No.	TOTAL SHEETS
03	Yol, Col	5	R21.5/R23.8,R27.0/ R28.9,R0.0/R21.0	1	87

PROJECT PLANS FOR CONSTRUCTION ON

STATE HIGHWAY

IN YOLO AND COLUSA COUNTIES FROM 1.1 MILES SOUTH OF ROUTE 505/5 SEPARATION TO COUNTY ROAD 8 AND FROM 0.8 MILE SOUTH OF COUNTY ROAD 2 TO 1.7 MILES SOUTH OF LURLINE AVENUE OVERCROSSING

TO BE SUPPLEMENTED BY STANDARD PLANS DATED MAY 2006

LOCATION MAP

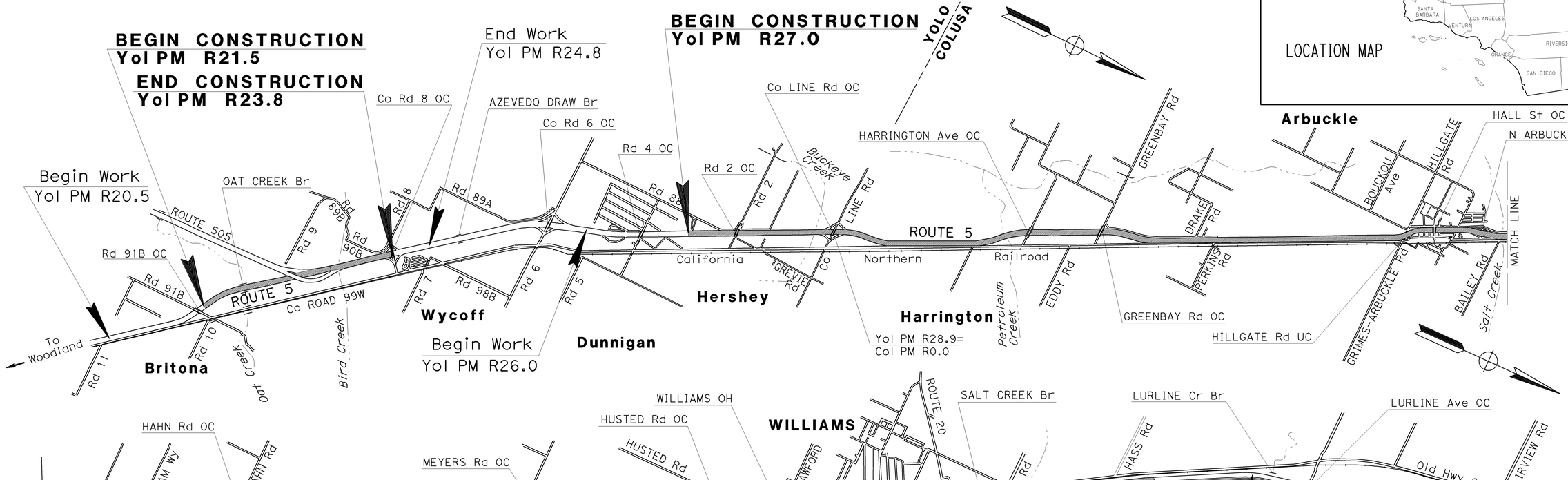

Ana Serrano 5-4-10
PROJECT ENGINEER DATE
REGISTERED CIVIL ENGINEER

ANA SERRANO
No. 65977
Exp. 6-30-12
CIVIL
REGISTERED PROFESSIONAL ENGINEER
STATE OF CALIFORNIA

May 10, 2010
PLANS APPROVAL DATE

THE STATE OF CALIFORNIA OR ITS OFFICERS OR AGENTS SHALL NOT BE RESPONSIBLE FOR THE ACCURACY OR COMPLETENESS OF SCANNED COPIES OF THIS PLAN SHEET.

THE CONTRACTOR SHALL POSSESS THE CLASS (OR CLASSES) OF LICENSE AS SPECIFIED IN THE "NOTICE TO BIDDERS."

NO SCALE

CONTRACT No.	03-3C8904
PROJECT ID	0300001122

PROJECT MANAGER: MELANI MILLARD
DESIGN ENGINEER: GILBERT OGAZ

LAST REVISION: DATE PLOTTED => 13-SEP-2010 TIME PLOTTED => 11:25 00-00-00

Dist	COUNTY	ROUTE	POST MILES TOTAL PROJECT	SHEET No.	TOTAL SHEETS
03	Yol, Col	5	R21.5/R23.8,R27.0/ R28.9,R0.0/R21.0	2	87

Scott W. Mann — REGISTERED CIVIL ENGINEER — 7-1-10 DATE

5-10-10
PLANS APPROVAL DATE

REGISTERED PROFESSIONAL ENGINEER — SCOTT MANN No. 72005 Exp 6-30-12 CIVIL — STATE OF CALIFORNIA

THE STATE OF CALIFORNIA OR ITS OFFICERS OR AGENTS SHALL NOT BE RESPONSIBLE FOR THE ACCURACY OR COMPLETENESS OF SCANNED COPIES OF THIS PLAN SHEET.

NOTES:

1. DIMENSIONS OF THE PAVEMENT STRUCTURES (STRUCTURAL SECTIONS) ARE SUBJECT TO TOLERANCES SPECIFIED IN THE STANDARD SPECIFICATIONS.
2. SUPERELEVATION AS SHOWN OR AS DIRECTED BY THE ENGINEER.
3. EXISTING UTILITIES HAVE NOT BEEN PLOTTED ON THESE PLANS.
4. NO WORK ON BRIDGES.
5. RWMA-O TO EXTEND TO EP ON HIGH SIDE OF SUPERELEVATION.

LEGEND

RWMA-O	RUBBERIZED WARM MIX ASPHALT (TYPE O)
RWMA-G	RUBBERIZED WARM MIX ASPHALT (TYPE G)
HMA-A	HOT MIX ASPHALT (TYPE A)

DESIGN DESIGNATION (I-5)

2010 ADT= 31,900	D=55%
2030 ADT= 45,900	T=19%
DHV= 3,670	V=70 MPH
ESSAL= 47,230	TI_{20} = 14%

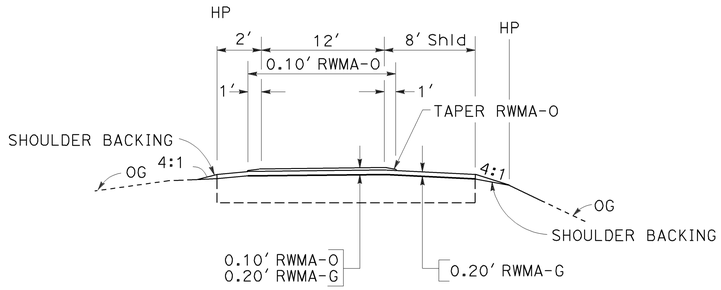

RAMPS

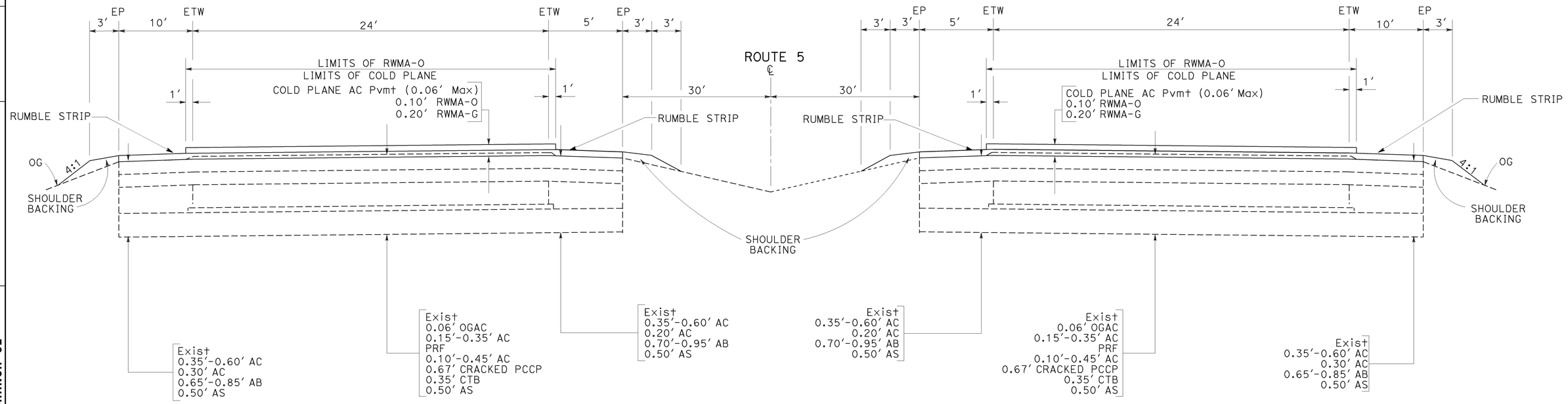

SOUTHBOUND

NORTHBOUND

ROUTE 5
YOLO COUNTY
PM R21.5 TO R22.8
PM R27.0 TO R28.9

TYPICAL CROSS SECTIONS

NO SCALE

X-1

STATE OF CALIFORNIA - DEPARTMENT OF TRANSPORTATION
NORTH REGION
OFFICE OF DESIGN SOUTH
DESIGN BRANCH S2

FUNCTIONAL SUPERVISOR: GILBERT OGAZ

CALCULATED-DESIGNED BY: ANA SERRANO
CHECKED BY: SCOTT MANN

REVISED BY | DATE REVISED

LAST REVISION | DATE PLOTTED => 13-SEP-2010
00-00-00 | TIME PLOTTED => 11:25

Dist	COUNTY	ROUTE	POST MILES TOTAL PROJECT	SHEET No.	TOTAL SHEETS
03	Yol, Col	5	R21.5/R23.8,R27.0/ R28.9,R0.0/R21.0	3	87

REGISTERED CIVIL ENGINEER — 7-1-10 DATE

SCOTT MANN No. 72005 Exp 6-30-12 CIVIL — REGISTERED PROFESSIONAL ENGINEER — STATE OF CALIFORNIA

5-10-10
PLANS APPROVAL DATE

THE STATE OF CALIFORNIA OR ITS OFFICERS OR AGENTS SHALL NOT BE RESPONSIBLE FOR THE ACCURACY OR COMPLETENESS OF SCANNED COPIES OF THIS PLAN SHEET.

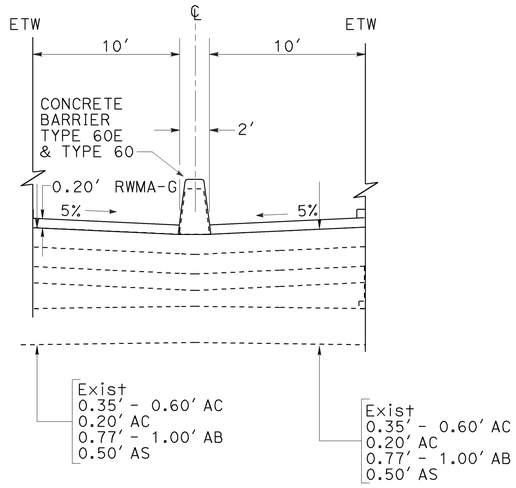

NORTHBOUND/SOUTHBOUND ROUTE 5 COLUSA COUNTY PM R6.70 TO PM R7.70

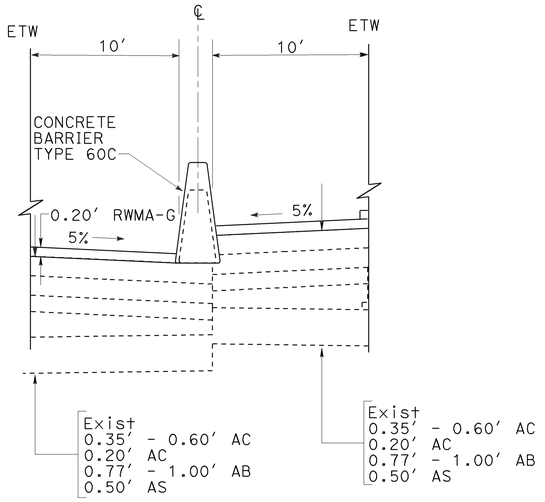

NORTHBOUND/SOUTHBOUND ROUTE 5 COLUSA COUNTY PM R6.70 TO PM R7.31

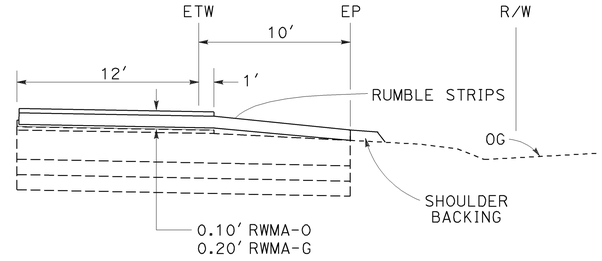

AUXILIARY LANE COLUSA COUNTY PM R18.11 TO R18.46

NB & SB

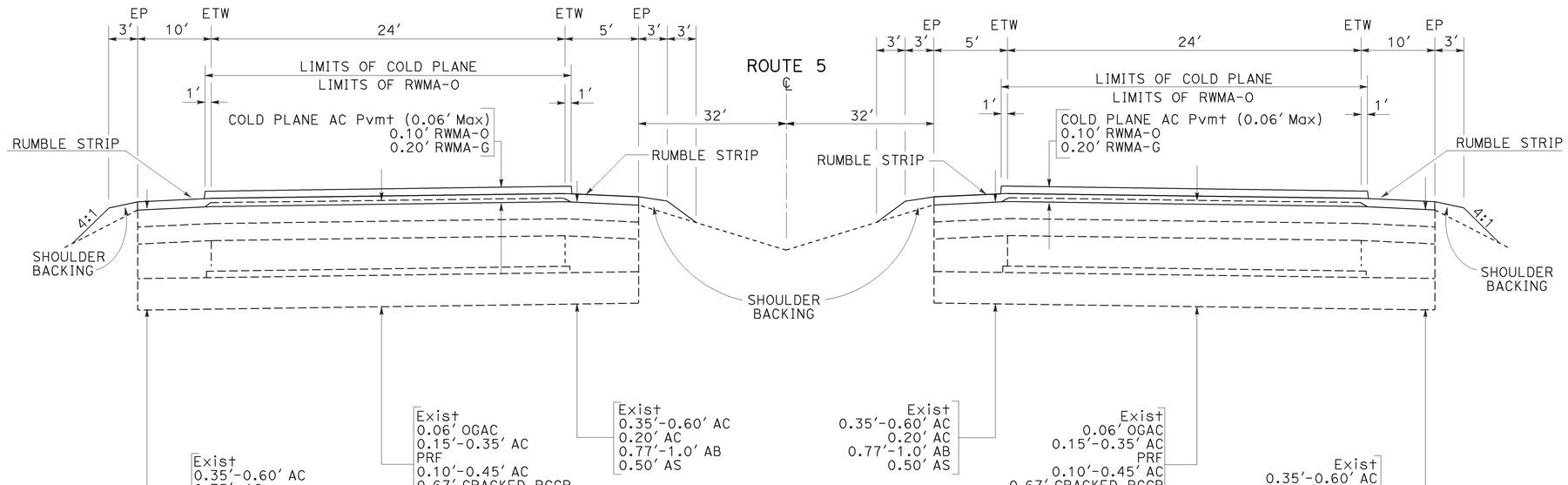

SOUTHBOUND — **NORTHBOUND**

ROUTE 5 COLUSA COUNTY

PM R0.0 TO R21.0

TYPICAL CROSS SECTIONS

NO SCALE

X-2

STATE OF CALIFORNIA - DEPARTMENT OF TRANSPORTATION
NORTH REGION
OFFICE OF DESIGN SOUTH
DESIGN BRANCH S2
Caltrans

FUNCTIONAL SUPERVISOR: GILBERT OGAZ
CALCULATED-DESIGNED BY: ANA SERRANO
CHECKED BY: SCOTT MANN
REVISED BY
DATE REVISED

LAST REVISION DATE PLOTTED => 13-SEP-2010
00-00-00 TIME PLOTTED => 11:25

BORDER LAST REVISED 7/1/2010
USERNAME => s128033
DGN FILE => 33c890ca002.dgn
RELATIVE BORDER SCALE IS IN INCHES 0 1 2 3
UNIT 0322
PROJECT NUMBER & PHASE 0300011221

Dist	COUNTY	ROUTE	POST MILES TOTAL PROJECT	SHEET No.	TOTAL SHEETS
03	Yol, Col	5	R21.5/R23.8,R27.0/ R28.9,R0.0/R21.0	4	87

Ana Serrano — REGISTERED CIVIL ENGINEER — 5-4-10 DATE

5-10-10 PLANS APPROVAL DATE

REGISTERED PROFESSIONAL ENGINEER — ANA SERRANO No. 65977 Exp 6-30-12 CIVIL — STATE OF CALIFORNIA

THE STATE OF CALIFORNIA OR ITS OFFICERS OR AGENTS SHALL NOT BE RESPONSIBLE FOR THE ACCURACY OR COMPLETENESS OF SCANNED COPIES OF THIS PLAN SHEET.

LEGEND:

COLD PLANE AC PAVEMENT

REPLACE AC SURFACING

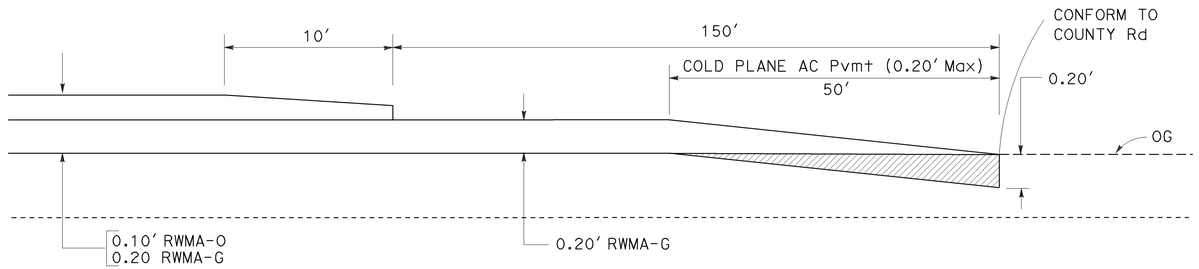

RAMP PAVEMENT TAPER PROFILE

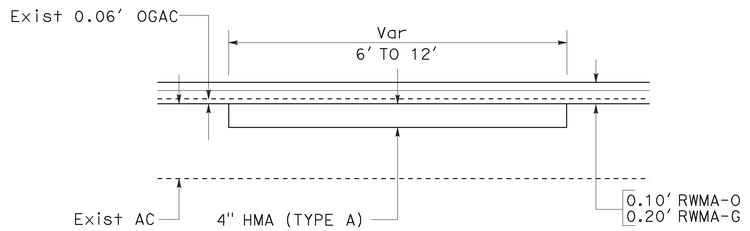

REPLACE AC SURFACING

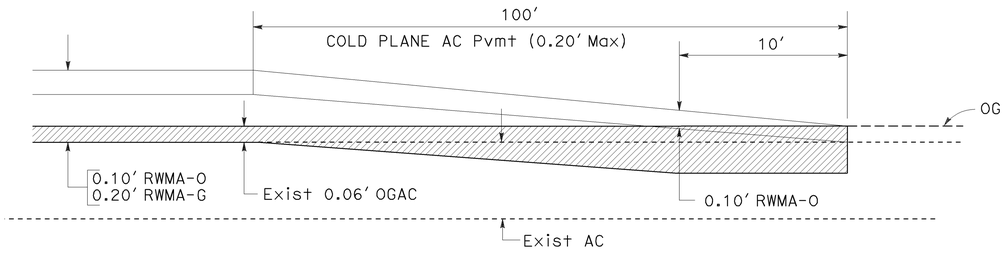

CONFORM DETAIL

NB/SB ROUTE 5, YOLO Co, PM R21.5
NB/SB ROUTE 5, YOLO Co, PM R22.8
NB/SB ROUTE 5, YOLO Co, PM R27.0
NB/SB ROUTE 5, COLUSA Co, PM R21.0

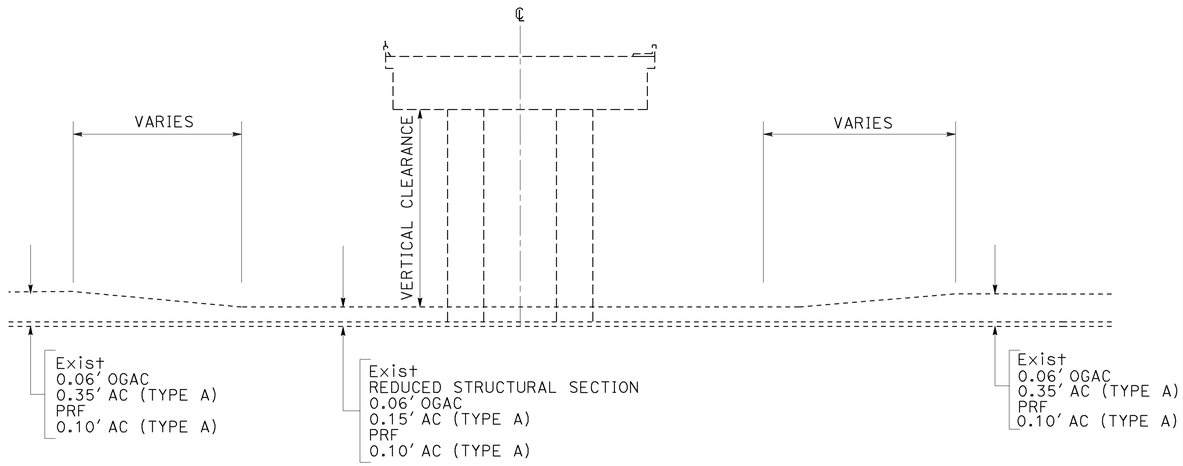

BRIDGE CLEARANCE PAVEMENT TRANSITION AT OVERCROSSINGS

NOTE:

EXACT CONFORM LIMITS TO BE DETERMINED BY ENGINEER.

CONSTRUCTION DETAILS

NO SCALE

C-1

STATE OF CALIFORNIA - DEPARTMENT OF TRANSPORTATION
NORTH REGION
OFFICE OF DESIGN SOUTH
DESIGN BRANCH S2

FUNCTIONAL SUPERVISOR: GILBERT OGAZ

CALCULATED-DESIGNED BY: ANA SERRANO
CHECKED BY:

REVISED BY	DATE REVISED

LAST REVISION 00-00-00 | DATE PLOTTED => 13-SEP-2010 | TIME PLOTTED => 11:25

Dist	COUNTY	ROUTE	POST MILES TOTAL PROJECT	SHEET No.	TOTAL SHEETS
03	Yol, Col	5	R21.5/R23.8,R27.0/ R28.9,R0.0/R21.0	5	87

Ana Serrano — REGISTERED CIVIL ENGINEER — 5-4-10 DATE

5-10-10 PLANS APPROVAL DATE

ANA SERRANO No. 65977 Exp 6-30-12 CIVIL — REGISTERED PROFESSIONAL ENGINEER — STATE OF CALIFORNIA

THE STATE OF CALIFORNIA OR ITS OFFICERS OR AGENTS SHALL NOT BE RESPONSIBLE FOR THE ACCURACY OR COMPLETENESS OF SCANNED COPIES OF THIS PLAN SHEET.

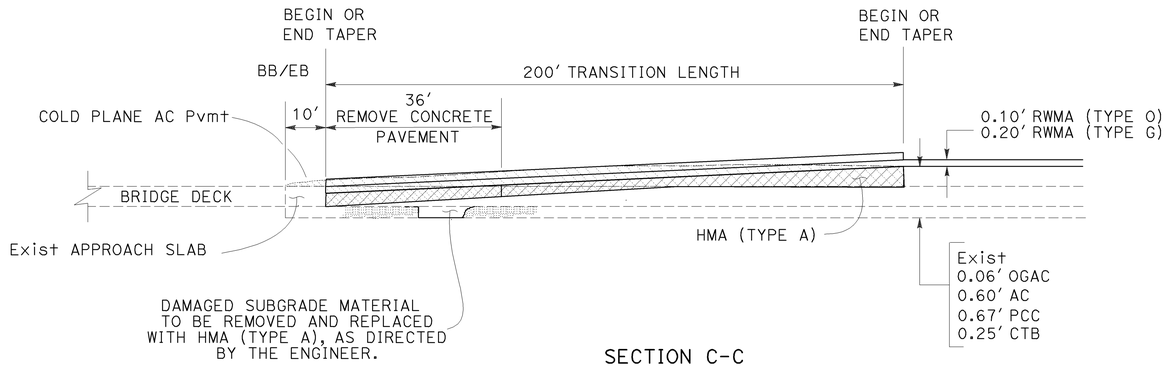

SECTION C-C

TRANSITION TAPER - PROFILE

LEGEND:

- ROADWAY EXCAVATION (REMOVE CONCRETE PAVEMENT)
- COLD PLANE AC Pvmt
- COLD PLANE AC Pvmt And RWMA (TYPE G)
- HMA (TYPE A)
- DIRECTION OF TRAFFIC

ABBREVIATIONS:

ACOD- ASPHALT CONCRETE OVERSIDE DRAIN
BWC - BONDED WEARING COURSE

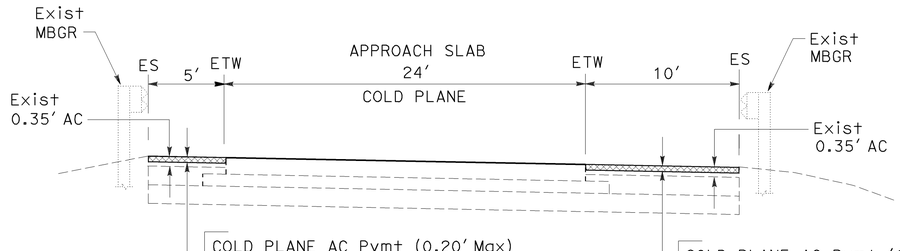

SECTION B-B

COLD PLANE AC SHOULDER PAVEMENT

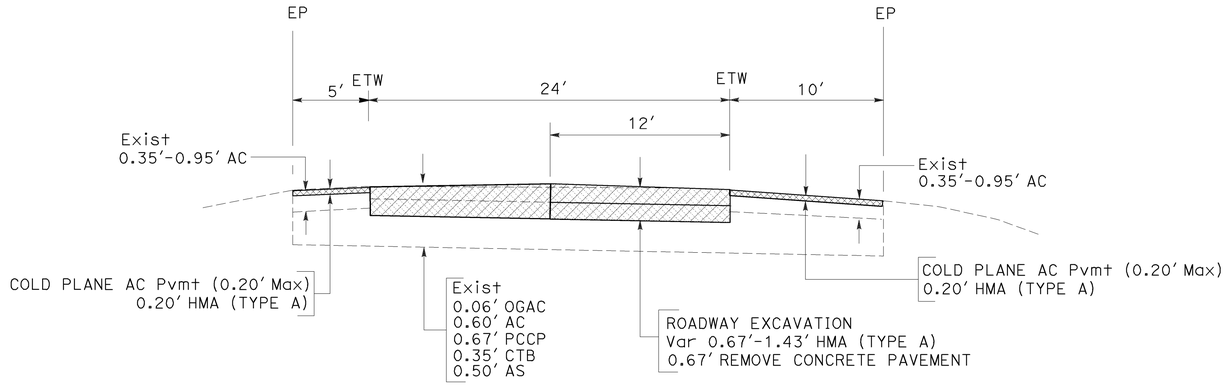

SECTION A-A

SLAB REMOVAL AND COLD PLANE

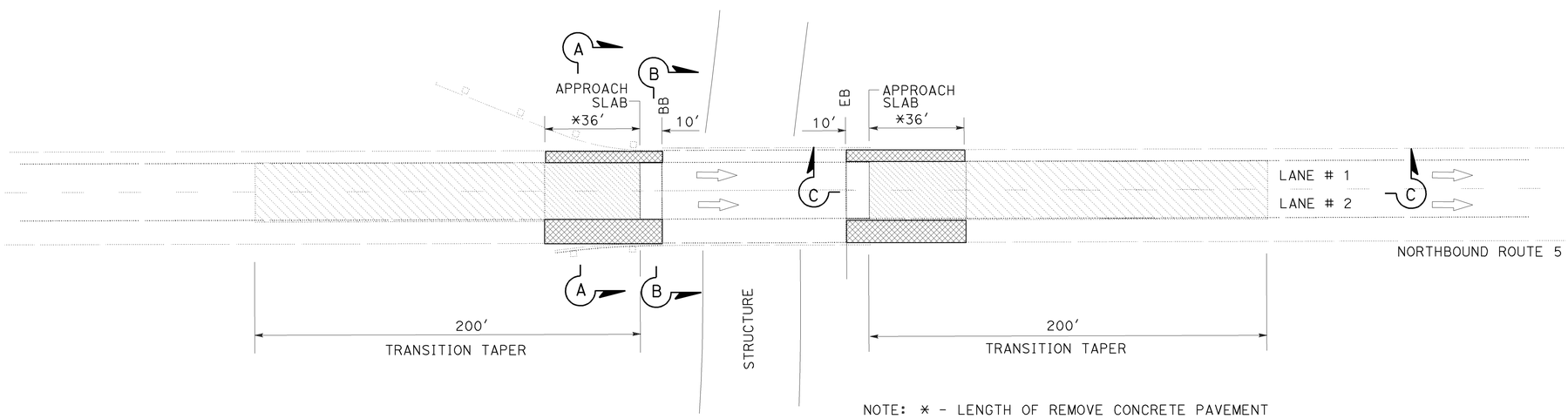

NOTE: * - LENGTH OF REMOVE CONCRETE PAVEMENT

OAT CREEK Br 22-135, BUCKEYE CREEK Br 22-137, PETROLEUM CREEK Br 15-64,
HILLGATE Rd Br 15-47, N. ARBUCKLE Br 15-62, WILLIAMS Br 15-66,
SALT CREEK Br 15-73, FRESHWATER CREEK Br 15-71

CONSTRUCTION DETAILS

NO SCALE

C-2

STATE OF CALIFORNIA - DEPARTMENT OF TRANSPORTATION
NORTH REGION
OFFICE OF DESIGN SOUTH
DESIGN BRANCH S2
Caltrans®

CALCULATED-DESIGNED BY: ANA SERRANO
CHECKED BY: ANA SERRANO
FUNCTIONAL SUPERVISOR: GILBERT OGAZ
REVISED BY
DATE REVISED

LAST REVISION: DATE PLOTTED => 13-SEP-2010 TIME PLOTTED => 11:25
00-00-00

BORDER LAST REVISED 7/1/2010
USERNAME => s128033
DGN FILE => 33c890ga002.dgn
RELATIVE BORDER SCALE IS IN INCHES 0 1 2 3
UNIT 0322
PROJECT NUMBER & PHASE 03000011221

Dist	COUNTY	ROUTE	POST MILES TOTAL PROJECT	SHEET No.	TOTAL SHEETS
03	Yol, Col	5	R21.5/R23.8,R27.0/ R28.9,R0.0/R21.0	6	87

Ana Serrano — REGISTERED CIVIL ENGINEER — 5-4-10 DATE

5-10-10 PLANS APPROVAL DATE

REGISTERED PROFESSIONAL ENGINEER — ANA SERRANO No. 65977 Exp 6-30-12 CIVIL — STATE OF CALIFORNIA

THE STATE OF CALIFORNIA OR ITS OFFICERS OR AGENTS SHALL NOT BE RESPONSIBLE FOR THE ACCURACY OR COMPLETENESS OF SCANNED COPIES OF THIS PLAN SHEET.

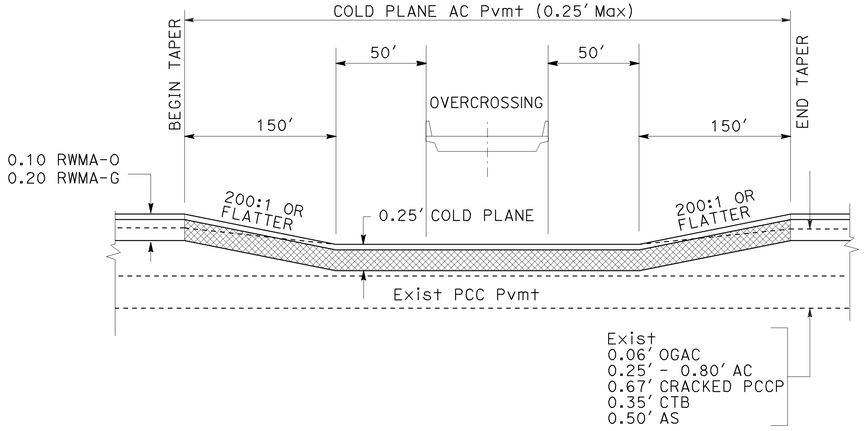

OVERHEAD CLEARANCE CONFORM

Rte 505/5 Sep, COUNTY LINE Rd,
HARRINGTON Ave, GREENBAY Rd, HALL St,
HAHN Rd, MEYERS Rd, HUSTED Rd, E St,
Rte 20/5 Sep AND FRESHWATER Rd

LEGEND:

COLD PLANE AC PAVEMENT

PAVEMENT TRANSITIONS

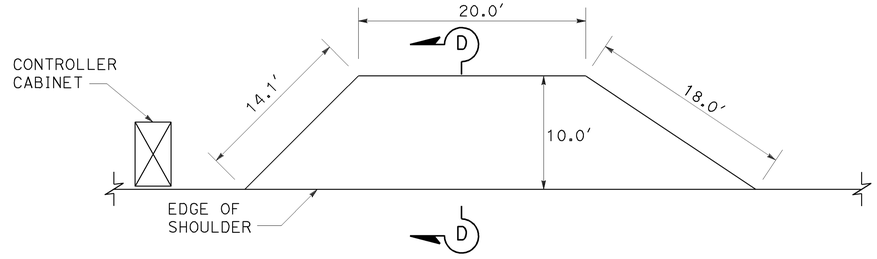

PLAN

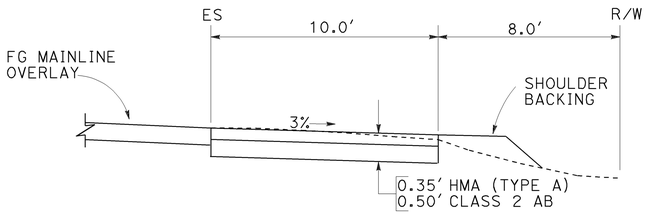

SECTION D-D

MAINTENANCE VEHICLE PULLOUT NB OFF RAMP TO HILLGATE RD PM R6.58

NOTE:

RESIDENT ENGINEER TO DETERMINE EXACT LOCATION OF PULLOUT.

REFER TO MODIFY TRAFFIC MONITORING STATION, SHEET E-1, FOR MORE DETAIL.

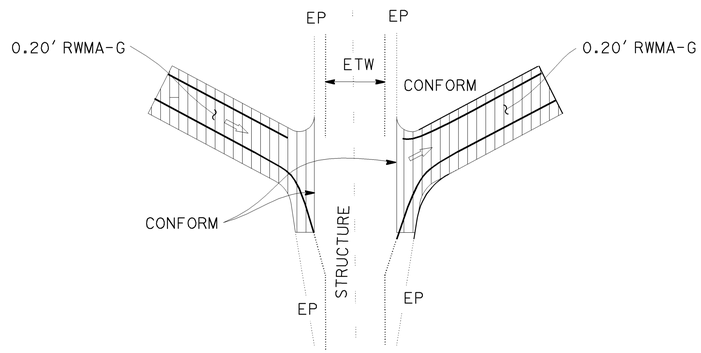

LIMITS OF RWMA-G ON AND OFF RAMPS

COUNTY LINE Rd
HILLGATE Rd (OFF RAMP NB AND ON & OFF RAMP SB)
PUTMAN Rd
HAHN Rd
HUSTED Rd
E St
ROUTE 5/20 Sep

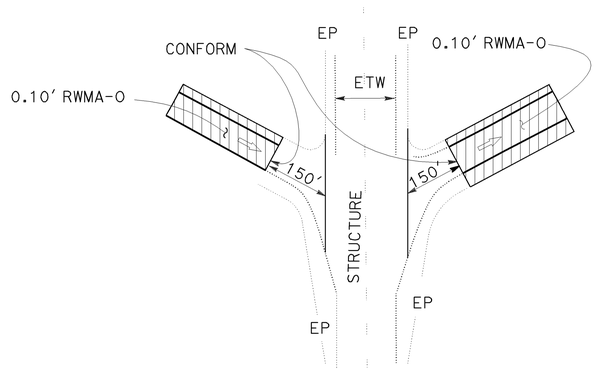

LIMITS OF RWMA-O ON AND OFF RAMPS

COUNTY LINE Rd
HILLGATE RD (OFF RAMP NB AND ON & OFF RAMP SB)
PUTMAN Rd
HAHN Rd
HUSTED Rd
E St
ROUTE 5/20 Sep

CONSTRUCTION DETAILS

NO SCALE

C-3

STATE OF CALIFORNIA - DEPARTMENT OF TRANSPORTATION
Caltrans
NORTH REGION
OFFICE OF DESIGN SOUTH
DESIGN BRANCH S2
FUNCTIONAL SUPERVISOR: GILBERT OGAZ
CALCULATED-DESIGNED BY: ANA SERRANO
CHECKED BY: ANA SERRANO
REVISED BY
DATE REVISED

LAST REVISION DATE PLOTTED => 13-SEP-2010
00-00-00 TIME PLOTTED => 11:25

BORDER LAST REVISED 7/1/2010 | USERNAME => s128033 | DGN FILE => 33c890ga003.dgn | RELATIVE BORDER SCALE IS IN INCHES 0 1 2 3 | UNIT 0322 | PROJECT NUMBER & PHASE 03000011221

Dist	COUNTY	ROUTE	POST MILES TOTAL PROJECT	SHEET No.	TOTAL SHEETS
03	Yol, Col	5	R21.5/R23.8,R27.0/ R28.9,R0.0/R21.0	7	87

Ana Serrano — REGISTERED CIVIL ENGINEER — 5-4-10 DATE

5-10-10 PLANS APPROVAL DATE

REGISTERED PROFESSIONAL ENGINEER — ANA SERRANO No. 65977 Exp 6-30-12 CIVIL — STATE OF CALIFORNIA

THE STATE OF CALIFORNIA OR ITS OFFICERS OR AGENTS SHALL NOT BE RESPONSIBLE FOR THE ACCURACY OR COMPLETENESS OF SCANNED COPIES OF THIS PLAN SHEET.

NOTES:

1. RUMBLE STRIPS SHALL NOT BE PLACED ON BRIDGE STRUCTURES OR APPROACH SLABS.

LEGEND

DIRECTION OF TRAVEL

SHOULDER RUMBLE STRIP

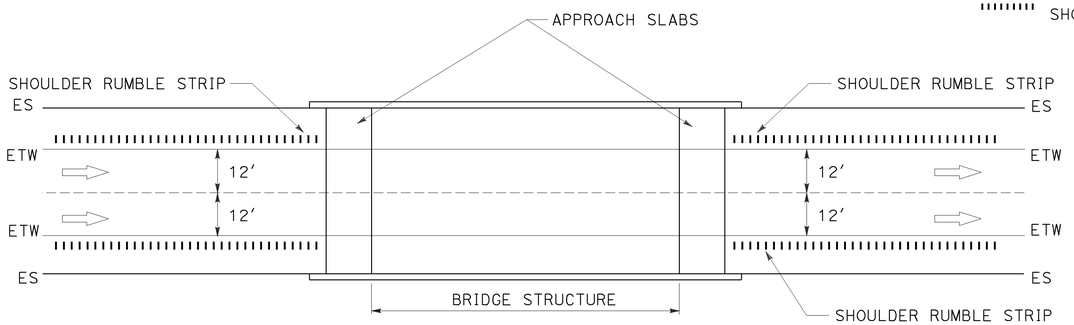

SHOULDER RUMBLE STRIPS AT BRIDGE APPROACH

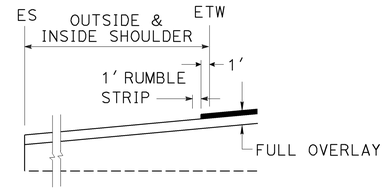

RUMBLE STRIP

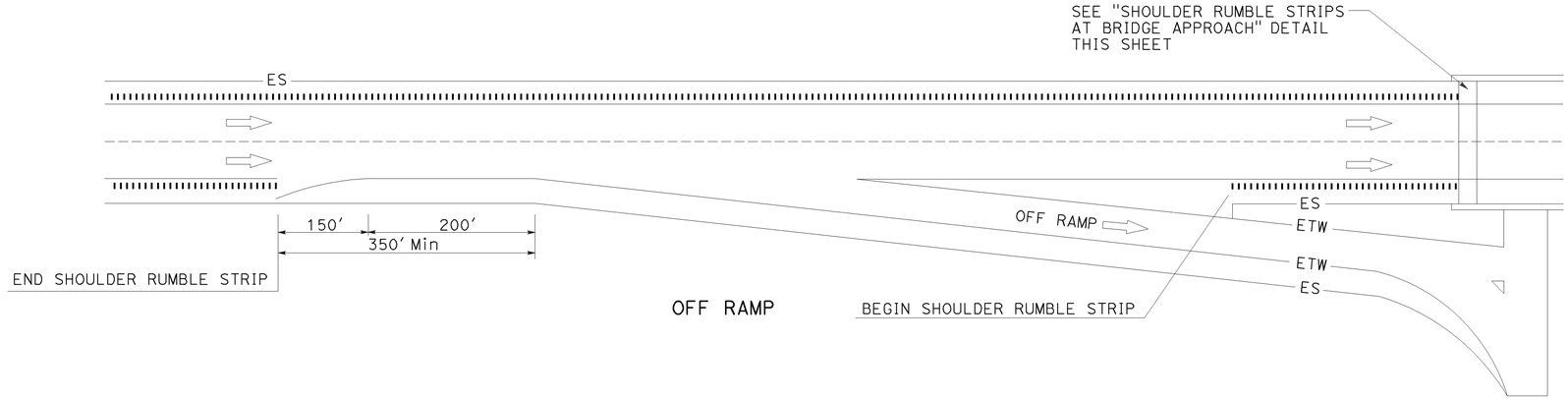

SHOULDER RUMBLE STRIPS AT RAMP LOCATIONS

CONSTRUCTION DETAILS

NO SCALE

C-4

STATE OF CALIFORNIA - DEPARTMENT OF TRANSPORTATION
NORTH REGION
OFFICE OF DESIGN SOUTH
DESIGN BRANCH S2

Caltrans®

FUNCTIONAL SUPERVISOR: GILBERT OGAZ

CALCULATED-DESIGNED BY | CHECKED BY

REVISED BY | DATE REVISED

ANA SERRANO | ANA SERRANO

LAST REVISION: 00-00-00
DATE PLOTTED => 13-SEP-2010
TIME PLOTTED => 11:25

BORDER LAST REVISED 7/1/2010

USERNAME => s128033
DGN FILE => 33c890ga004.dgn

RELATIVE BORDER SCALE IS IN INCHES 0 1 2 3

UNIT 0322

PROJECT NUMBER & PHASE 03000011221

Dist	COUNTY	ROUTE	POST MILES TOTAL PROJECT	SHEET No.	TOTAL SHEETS
03	Yol, Col	5	R21.5/R23.8,R27.0/ R28.9,R0.0/R21.0	8	87

REGISTERED CIVIL ENGINEER — 7-1-10 DATE

5-10-10
PLANS APPROVAL DATE

REGISTERED PROFESSIONAL ENGINEER — SCOTT MANN No. 72005 Exp 6-30-12 CIVIL — STATE OF CALIFORNIA

THE STATE OF CALIFORNIA OR ITS OFFICERS OR AGENTS SHALL NOT BE RESPONSIBLE FOR THE ACCURACY OR COMPLETENESS OF SCANNED COPIES OF THIS PLAN SHEET.

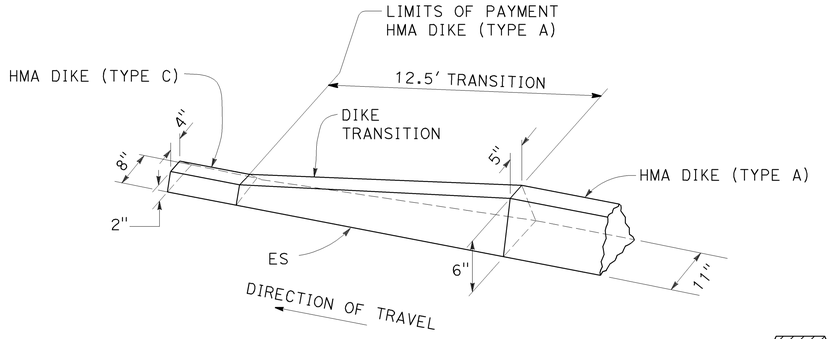

TYPE C

TYPE A

DIKE TRANSITION
TYPE A TO TYPE C

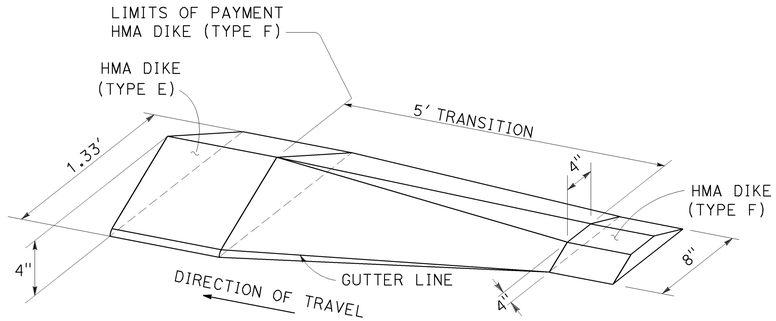

TYPE E

TYPE F

DIKE TRANSITION
TYPE F TO TYPE E

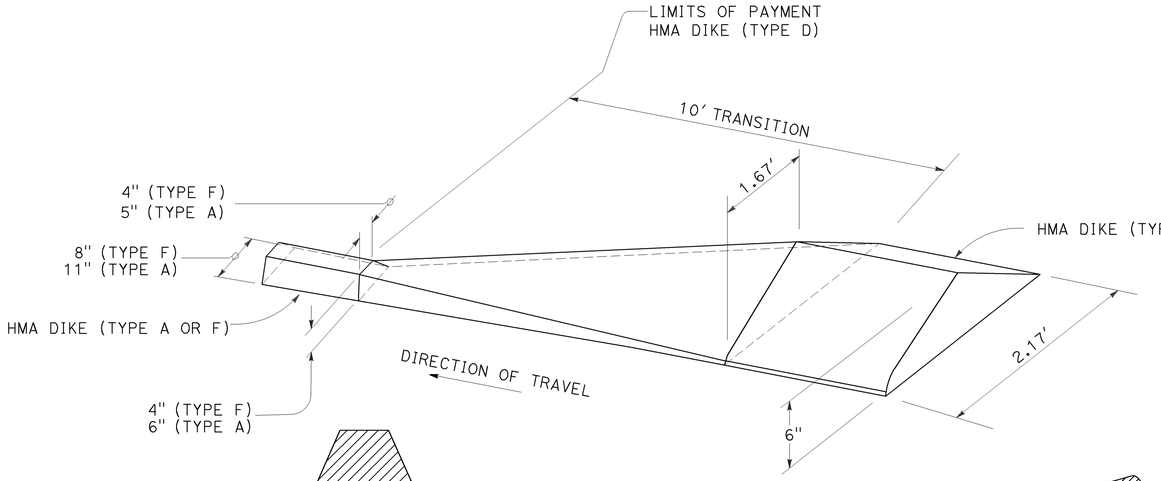

TYPE A

TYPE D

DIKE TRANSITION
TYPE D TO TYPE A,F

TYPE F

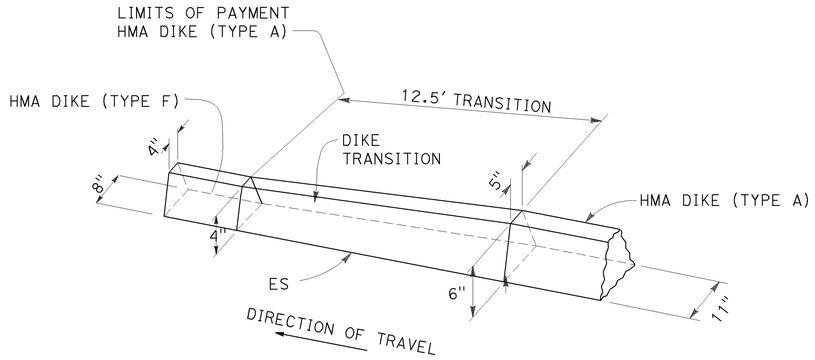

TYPE F

TYPE A

DIKE TRANSITION
TYPE A TO TYPE F

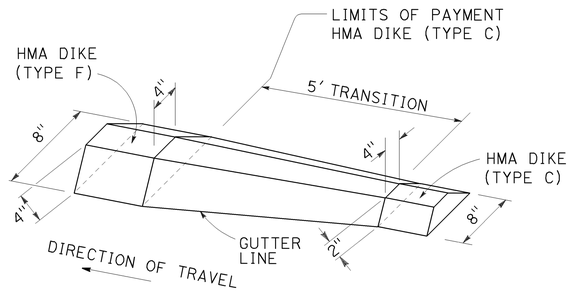

TYPE F

TYPE C

DIKE TRANSITION
TYPE C TO TYPE F

CONSTRUCTION DETAILS
NO SCALE

C-5

STATE OF CALIFORNIA - DEPARTMENT OF TRANSPORTATION
NORTH REGION
OFFICE OF DESIGN SOUTH
DESIGN BRANCH S2

REVISED BY	DATE REVISED

CALCULATED-DESIGNED BY: ANA SERRANO
CHECKED BY: SCOTT MANN
FUNCTIONAL SUPERVISOR: GILBERT OGAZ

LAST REVISION — DATE PLOTTED => 13-SEP-2010 — TIME PLOTTED => 11:25
00-00-00

BORDER LAST REVISED 7/1/2010 | USERNAME => s128033 | DGN FILE => 33c890ga005.dgn | RELATIVE BORDER SCALE IS IN INCHES 0 1 2 3 | UNIT 0322 | PROJECT NUMBER & PHASE 0300011221

Dist	COUNTY	ROUTE	POST MILES TOTAL PROJECT	SHEET No.	TOTAL SHEETS
03	Yol, Col	5	R21.5/R23.8,R27.0/ R28.9,R0.0/R21.0	9	87

Ana Serrano — REGISTERED CIVIL ENGINEER — 5-4-10 DATE

5-10-10 PLANS APPROVAL DATE

REGISTERED PROFESSIONAL ENGINEER — ANA SERRANO No. 65977 Exp 6-30-12 CIVIL — STATE OF CALIFORNIA

THE STATE OF CALIFORNIA OR ITS OFFICERS OR AGENTS SHALL NOT BE RESPONSIBLE FOR THE ACCURACY OR COMPLETENESS OF SCANNED COPIES OF THIS PLAN SHEET.

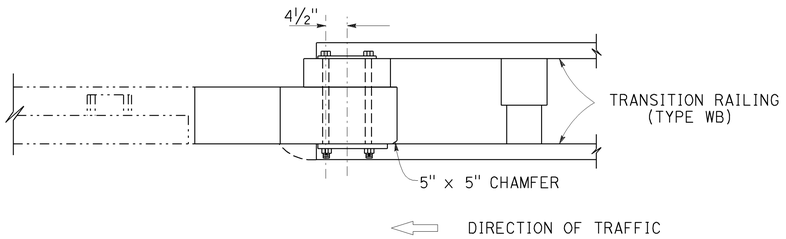

PLAN

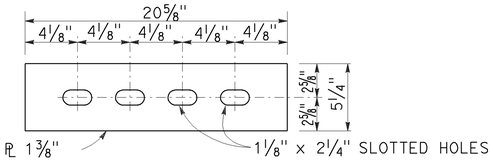

SPLICE PLATE

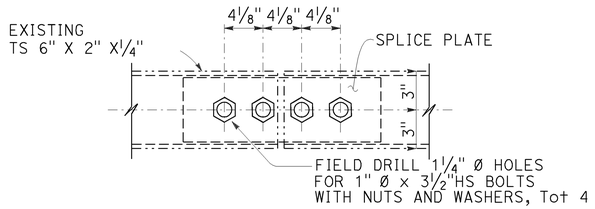

MODIFIED TUBE RAIL SPLICE DETAIL

SEE NOTE 3

NOTES:

1. FOR DETAILS NOT SHOWN, SEE STANDARD PLANS.
2. EXISTING BARRIER DIMENSIONS SHALL BE VERIFIED BY THE CONTRACTOR IN THE FIELD BEFORE FABRICATING ANY END CONNECTION TO CONFORM WITH EXISTING CONDITIONS.
3. IF TYPE 9 RAIL IS NOT CONTINUOUS OVER 2 POSTS, USE RAIL SPLICE DETAIL AT EXISTING EXPANSION JOINT.

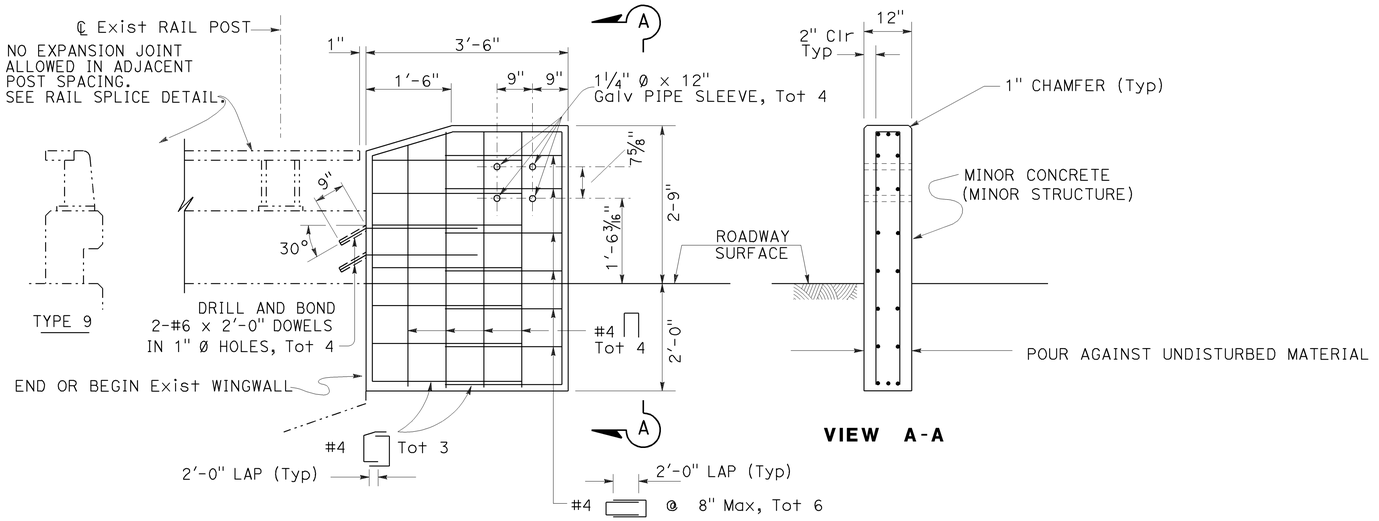

ELEVATION

VIEW A-A

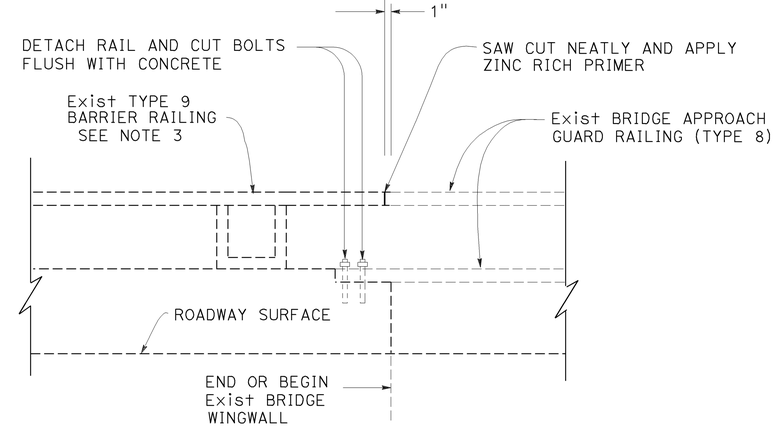

BRIDGE APPROACH GUARD RAILING REMOVAL DETAIL

CONSTRUCTION DETAILS (CONCRETE END BLOCK)

NO SCALE

C-6

STATE OF CALIFORNIA - DEPARTMENT OF TRANSPORTATION
NORTH REGION
OFFICE OF DESIGN SOUTH
DESIGN BRANCH S2
Caltrans

FUNCTIONAL SUPERVISOR: GILBERT OGAZ

CALCULATED-DESIGNED BY:
CHECKED BY:

REVISED BY: ANA SERRANO
DATE REVISED: ANA SERRANO

LAST REVISION DATE PLOTTED => 13-SEP-2010
TIME PLOTTED => 11:25
00-00-00

Dist	COUNTY	ROUTE	POST MILES TOTAL PROJECT	SHEET No.	TOTAL SHEETS
03	Yol, Col	5	R21.5/R23.8,R27.0/ R28.9,R0.0/R21.0	10	87

Ana Serrano
REGISTERED CIVIL ENGINEER — 5-4-10 DATE

5-10-10
PLANS APPROVAL DATE

REGISTERED PROFESSIONAL ENGINEER — ANA SERRANO No. 65977 Exp 6-30-12 CIVIL — STATE OF CALIFORNIA

THE STATE OF CALIFORNIA OR ITS OFFICERS OR AGENTS SHALL NOT BE RESPONSIBLE FOR THE ACCURACY OR COMPLETENESS OF SCANNED COPIES OF THIS PLAN SHEET.

NOTES:

1. APPLICATION OF NESTED RAIL TO BE DETERMINED BY ENGINEER.
2. TO BE USED ONLY IF UTILITY CONFLICTS ARE ENCOUNTERED IN SECTIONS THAT HAVE STANDARD RAILING MBGR.
3. NOT FOR USE IF UTILITY CONFLICTS ARE ENCOUNTERED IN LOCATIONS THAT REQUIRE TRANSITION RAILING (TYPE WB), ALTERNATIVE IN-LINE OR ALTERNATIVE FLARED TERMINAL SYSYEMS.
4. EXISTING UTILITY FACILITIES HAVE NOT BEEN POSITIVELY LOCATED.

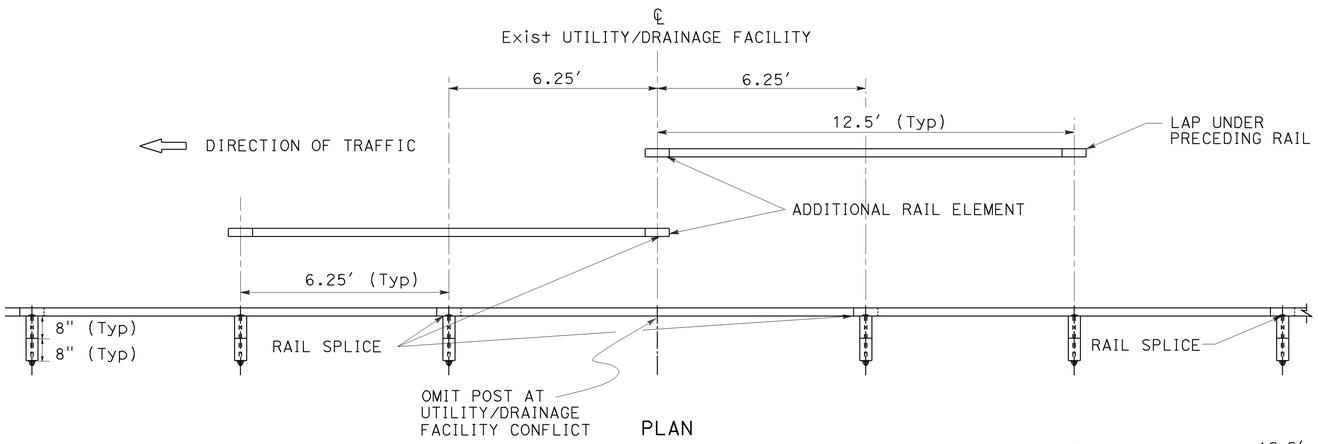

PLAN

2-RAIL NESTED METAL BEAM GUARD RAIL ELEMENT (SPLICE IN CENTER)

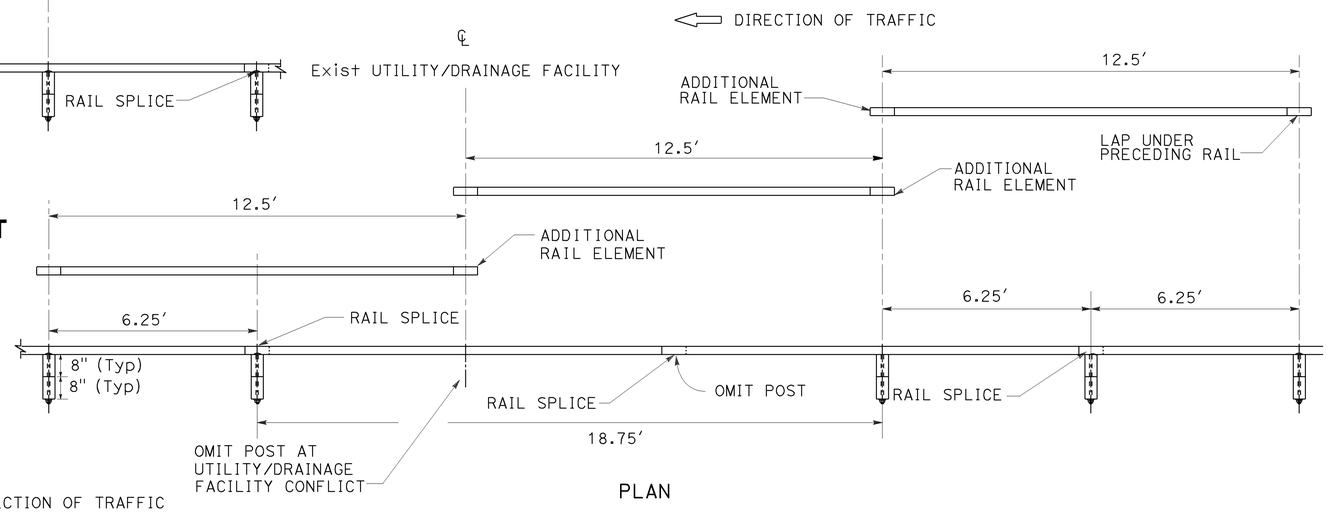

PLAN

3-RAIL NESTED METAL BEAM GUARD RAIL ELEMENT (TWO POSTS OMITTED)

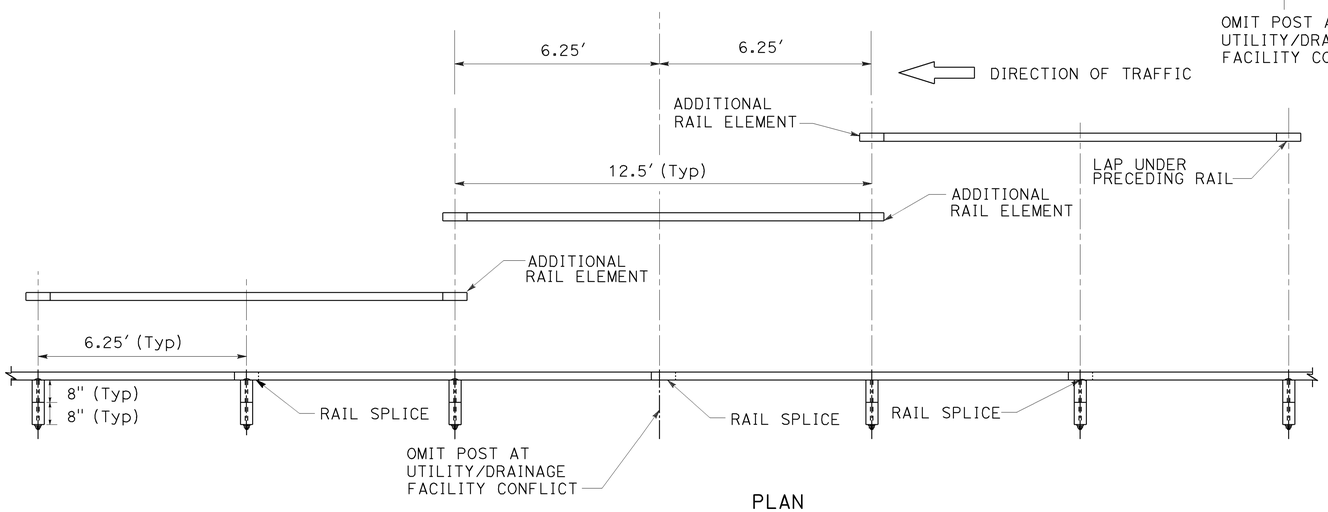

PLAN

3-RAIL NESTED METAL BEAM GUARD RAIL ELEMENT (SPLICE AT POSTS)

CONSTRUCTION DETAILS

NO SCALE

C-7

STATE OF CALIFORNIA - DEPARTMENT OF TRANSPORTATION
NORTH REGION
OFFICE OF DESIGN SOUTH
DESIGN BRANCH S2
Caltrans

FUNCTIONAL SUPERVISOR: GILBERT OGAZ
CALCULATED-DESIGNED BY: ANA SERRANO
CHECKED BY:
REVISED BY
DATE REVISED

LAST REVISION DATE PLOTTED => 13-SEP-2010
00-00-00 TIME PLOTTED => 11:25

BORDER LAST REVISED 7/1/2010
USERNAME => s128033
DGN FILE => 33c890ga007.dgn
RELATIVE BORDER SCALE IS IN INCHES 0 1 2 3
UNIT 0322
PROJECT NUMBER & PHASE 03000011221

Dist	COUNTY	ROUTE	POST MILES TOTAL PROJECT	SHEET No.	TOTAL SHEETS
03	Yol,Col	5	R21.5/R23.8,R27.0/R28.9 R0.0/R21.0	11	87

Joyce K. Loftus — REGISTERED CIVIL ENGINEER — 5-10-10 DATE

5-10-10 PLANS APPROVAL DATE

REGISTERED PROFESSIONAL ENGINEER — Joyce K. Loftus No. 38426 Exp. 3-31-11 CIVIL — STATE OF CALIFORNIA

THE STATE OF CALIFORNIA OR ITS OFFICERS OR AGENTS SHALL NOT BE RESPONSIBLE FOR THE ACCURACY OR COMPLETENESS OF ELECTRONIC COPIES OF THIS PLAN SHEET.

STATIONARY MOUNTED CONSTRUCTION AREA SIGNS

SIGN LETTER	SIGN CODE FEDERAL	SIGN CODE CALIFORNIA	PANEL SIZE	SIGN MESSAGE	NUMBER OF POST AND SIZE	NUMBER OF SIGNS
A	W20-1	C23	60" x 60"	ROAD WORK AHEAD	2 - 6" x 6"	4
B		C40(Mod)	96" x 60"	TRAFFIC FINES DOUBLED IN WORK ZONES	2 - 6" x 6"	4
C		C14	48" x 24"	END ROAD WORK	1 - 4" x 6"	25
D		G20-1[Spec](23)	84" x 42"	ROAD WORK NEXT 23 MILES	2 - 4" x 6"	4
E	W20-1	C23	48" x 48"	ROAD WORK AHEAD	1 - 6" x 6"	21

NOTES:

1. EXACT SIGN LOCATIONS TO BE DETERMINED BY THE ENGINEER.
2. FOR ADDITIONAL CONSTRUCTION AREA SIGNS, SEE DETOUR PLANS.
3. THIS PLAN ACCURATE FOR CONSTRUCTION AREA SIGN WORK ONLY.

LEGEND

(X) CONSTRUCTION AREA SIGN LETTER

SIGN - SINGLE POST

SIGN - TWO POSTS

<CA> CALIFORNIA SIGN CODE

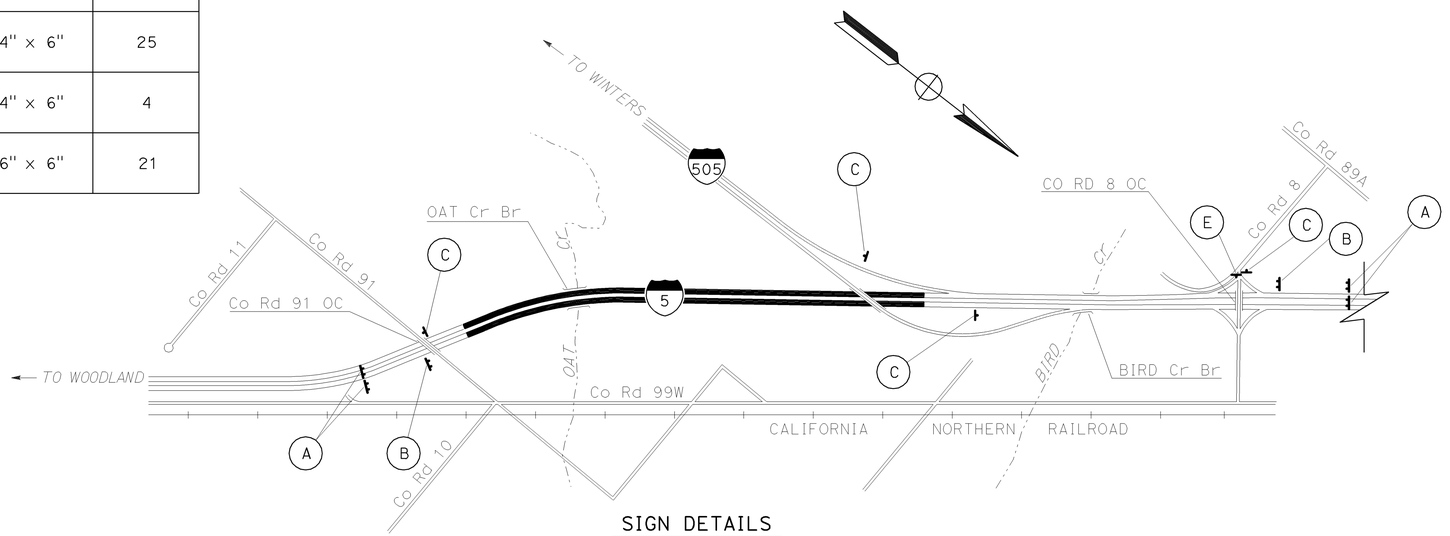

SIGN DETAILS

(B) C40(Mod)<CA>

TRAFFIC FINES DOUBLED IN WORK ZONES

8" D SERIES LETTERS

96"x60"

RETROREFLECTIVE WHITE BACKGROUND WITH BLACK LEGEND AND BORDER.

(D) G20-1[Spec](23)<CA>

ROAD WORK NEXT 23 MILES

8" C SERIES LETTERS

84"x42"

RETROREFLECTIVE ORANGE BACKGROUND WITH BLACK LEGEND AND BORDER.

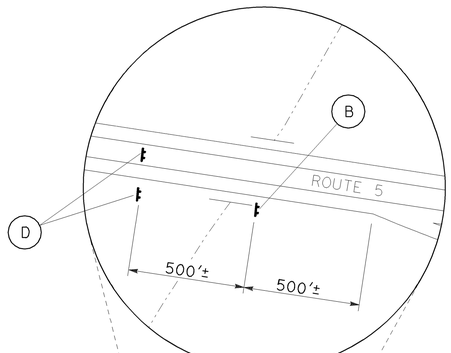

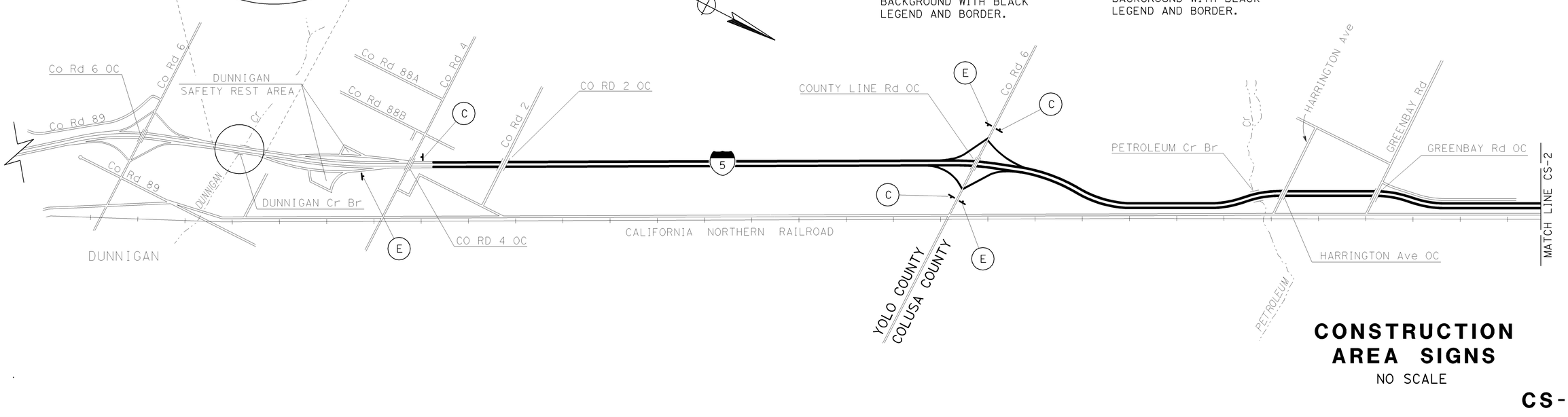

CONSTRUCTION AREA SIGNS

NO SCALE

CS-1

REVISED BY | DATE REVISED

JACK KEMMERLY | JOYCE LOFTUS

CALCULATED-DESIGNED BY | CHECKED BY

FUNCTIONAL SUPERVISOR: JOSEPH W. HORTON

STATE OF CALIFORNIA - DEPARTMENT OF TRANSPORTATION

TRAFFIC

Caltrans

P:\proj\03\3c890\drafting\33c8901a001.dgn

LAST REVISION | DATE PLOTTED => 13-SEP-2010 | TIME PLOTTED => 11:26

BORDER LAST REVISED 7/1/2010 | USERNAME => s128033 | DGN FILE => 33c8901a001.dgn | RELATIVE BORDER SCALE IS IN INCHES 0 1 2 3 | UNIT 0389 | PROJECT NUMBER & PHASE 0300011221

Dist	COUNTY	ROUTE	POST MILES TOTAL PROJECT	SHEET No.	TOTAL SHEETS
03	Yol,Col	5	R21.5/R23.8,R27.0/R28.9 R0.0/R21.0	12	87

Joyce K Loftus — REGISTERED CIVIL ENGINEER — 5-10-10 DATE

5-10-10
PLANS APPROVAL DATE

REGISTERED PROFESSIONAL ENGINEER — Joyce K. Loftus — No. 38426 — Exp. 3-31-11 — CIVIL — STATE OF CALIFORNIA

THE STATE OF CALIFORNIA OR ITS OFFICERS OR AGENTS SHALL NOT BE RESPONSIBLE FOR THE ACCURACY OR COMPLETENESS OF ELECTRONIC COPIES OF THIS PLAN SHEET.

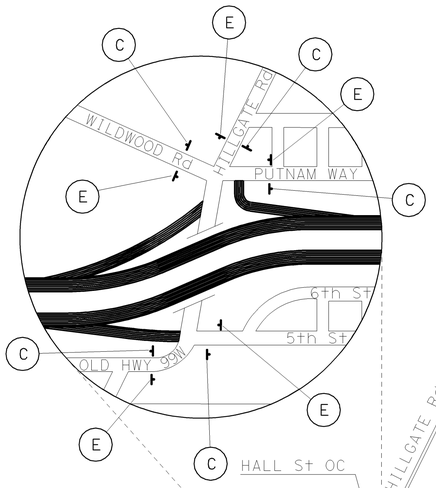

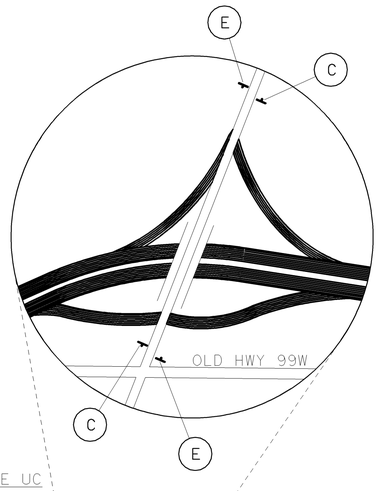

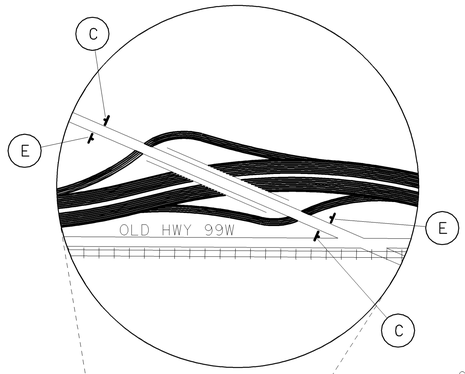

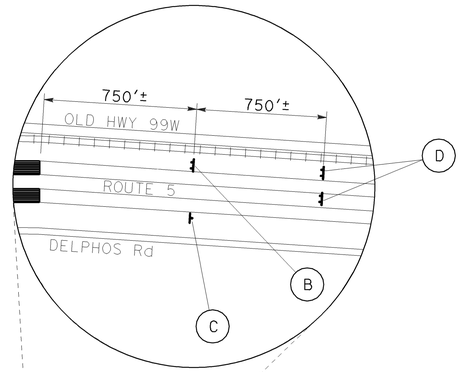

CONSTRUCTION AREA SIGNS

NO SCALE

THIS PLAN ACCURATE FOR CONSTRUCTION AREA SIGN WORK ONLY.

CS-2

STATE OF CALIFORNIA - DEPARTMENT OF TRANSPORTATION
TRAFFIC

CALCULATED-DESIGNED BY	CHECKED BY
JACK KEMMERLY	JOYCE LOFTUS

FUNCTIONAL SUPERVISOR: JOSEPH W. HORTON

REVISED BY	DATE REVISED

P:\proj3\03\3c890\drafting\33c8901a002.dgn

LAST REVISION: DATE PLOTTED => 13-SEP-2010; TIME PLOTTED => 11:26; 05-10-10

BORDER LAST REVISED 7/1/2010 | USERNAME => s128033 | DGN FILE => 33c8901a002.dgn | RELATIVE BORDER SCALE IS IN INCHES 0 1 2 3 | UNIT 0322 | PROJECT NUMBER & PHASE 0300011221

Dist	COUNTY	ROUTE	POST MILES TOTAL PROJECT	SHEET No.	TOTAL SHEETS
03	Yol, Col	5	R21.5/R23.8,R27.0/ R28.9,R0.0/R21.0	13	87

Ana Serrano — REGISTERED CIVIL ENGINEER — 5-4-10 DATE

5-10-10 PLANS APPROVAL DATE

ANA SERRANO No. 65977 Exp 6-30-12 CIVIL — REGISTERED PROFESSIONAL ENGINEER — STATE OF CALIFORNIA

THE STATE OF CALIFORNIA OR ITS OFFICERS OR AGENTS SHALL NOT BE RESPONSIBLE FOR THE ACCURACY OR COMPLETENESS OF SCANNED COPIES OF THIS PLAN SHEET.

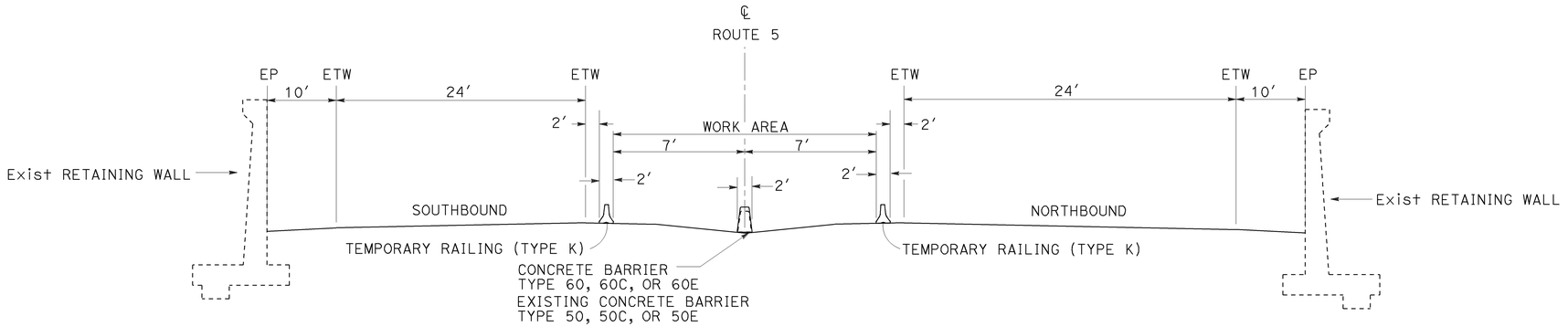

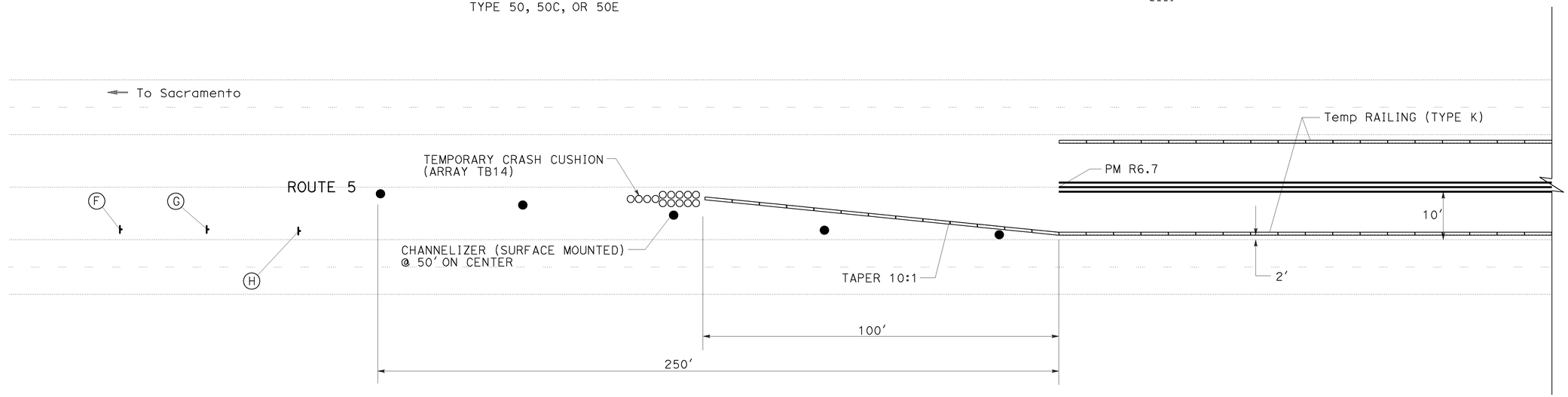

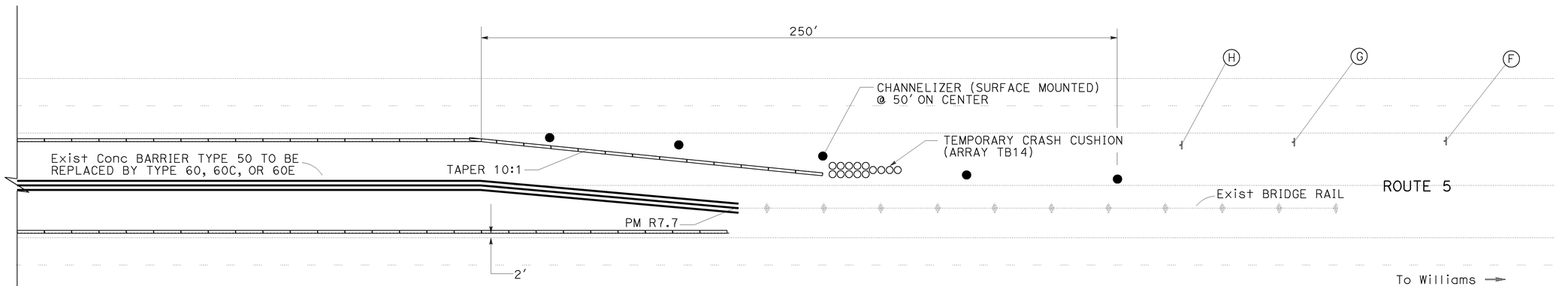

CONSTRUCTION AREA SIGNS

SIGN LETTER	SIGN CODE		PANEL SIZE	SIGN MESSAGE	NUMBER OF SIGNS
	FEDERAL	CALIFORNIA			
(F)		C24	48" x 48"	SHOULDER WORK AHEAD	2
(G)	W21-56L		48" x 48"	LEFT SHOULDER CLOSED AHEAD	2
(H)		C60A	48" x 48"	SHOULDER CLOSED	2

NOTE: REFER TO CONSTRUCTION AREA SIGNS PLAN SHEET FOR ADDITIONAL SIGNS

TRAFFIC HANDLING PLAN

NO SCALE

THIS PLAN ACCURATE FOR TRAFFIC HANDLING WORK ONLY

TH-1

STATE OF CALIFORNIA - DEPARTMENT OF TRANSPORTATION
NORTH REGION
OFFICE OF DESIGN SOUTH
DESIGN BRANCH S2

FUNCTIONAL SUPERVISOR: GILBERT OGAZ

CALCULATED-DESIGNED BY: ANA SERRANO
CHECKED BY: ANA SERRANO

REVISED BY | DATE REVISED

LAST REVISION | DATE PLOTTED => 13-SEP-2010
00-00-00 | TIME PLOTTED => 11:26

NORTHBOUND OFF RAMP TO COUNTY LINE Rd DETOUR

Dist	COUNTY	ROUTE	POST MILES TOTAL PROJECT	SHEET No.	TOTAL SHEETS
03	Yol, Col	5	R21.5/R23.8,R27.0/ R28.9,R0.0/R21.0	14	87

Ana Serrano — REGISTERED CIVIL ENGINEER — 5-4-10 DATE

5-10-10 PLANS APPROVAL DATE

REGISTERED PROFESSIONAL ENGINEER — ANA SERRANO No. 65977 Exp 6-30-12 CIVIL — STATE OF CALIFORNIA

THE STATE OF CALIFORNIA OR ITS OFFICERS OR AGENTS SHALL NOT BE RESPONSIBLE FOR THE ACCURACY OR COMPLETENESS OF SCANNED COPIES OF THIS PLAN SHEET.

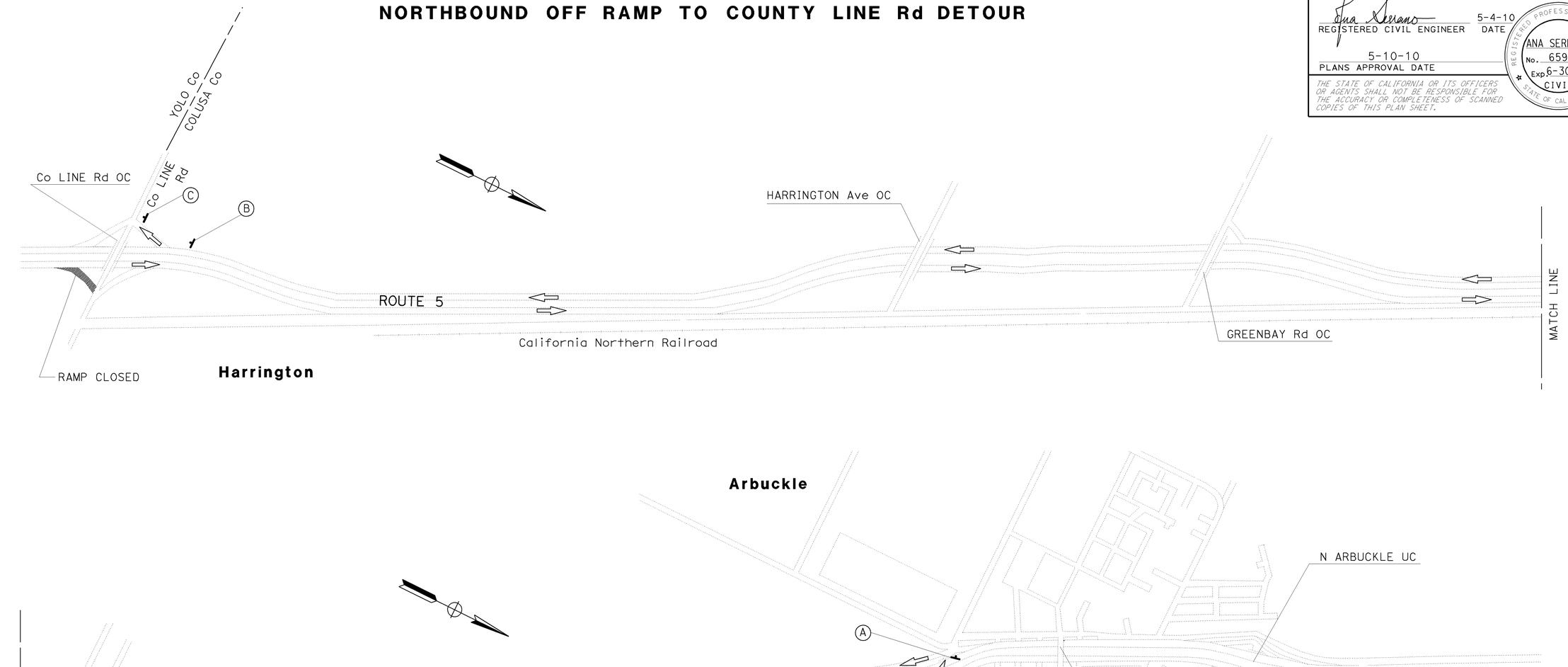

CONSTRUCTION AREA SIGNS

SIGN LETTER	SIGN CODE FEDERAL	SIGN CODE CALIFORNIA	PANEL SIZE	SIGN MESSAGE	NUMBER OF SIGNS
(A)	M4-10L	C5 (L†)	48" x 18"	DETOUR (INSIDE ARROW) L†	3
(B)	M4-10R	C5 (R†)	48" x 18"	DETOUR (INSIDE ARROW) R†	2
(C)	M4-8a	C7	24" x 18"	END DETOUR	1

NOTES:
1. ADDITIONAL CONSTRUCTION AREA SIGNS FOUND UNDER CONSTRUCTION AREA SIGNS.
2. PORTABLE CHANGEABLE MESSAGE SIGNS TO BE PLACED AS REQUIRED AND DIRECTED BY ENGINEER.

THIS PLAN ACCURATE FOR DETOUR CONSTRUCTION WORK ONLY

DETOUR PLAN

NO SCALE

DE-1

CALCULATED-DESIGNED BY: ANA SERRANO
CHECKED BY: ANA SERRANO
REVISED BY / DATE REVISED:
FUNCTIONAL SUPERVISOR: GILBERT OGAZ
STATE OF CALIFORNIA - DEPARTMENT OF TRANSPORTATION
Caltrans®
NORTH REGION
OFFICE OF DESIGN SOUTH
DESIGN BRANCH S2

LAST REVISION: DATE PLOTTED => 13-SEP-2010 | TIME PLOTTED => 11:26 | 00-00-00

BORDER LAST REVISED 7/1/2010 | USERNAME => s128033 | DGN FILE => 33c890mg001.dgn | RELATIVE BORDER SCALE IS IN INCHES 0 1 2 3 | UNIT 0322 | PROJECT NUMBER & PHASE 03000011221

Dist	COUNTY	ROUTE	POST MILES TOTAL PROJECT	SHEET No.	TOTAL SHEETS
03	Yol, Col	5	R21.5/R23.8,R27.0/ R28.9,R0.0/R21.0	15	87

Ana Serrano — REGISTERED CIVIL ENGINEER — 5-4-10 DATE

5-10-10 PLANS APPROVAL DATE

ANA SERRANO No. 65977 Exp 6-30-12 CIVIL — REGISTERED PROFESSIONAL ENGINEER — STATE OF CALIFORNIA

THE STATE OF CALIFORNIA OR ITS OFFICERS OR AGENTS SHALL NOT BE RESPONSIBLE FOR THE ACCURACY OR COMPLETENESS OF SCANNED COPIES OF THIS PLAN SHEET.

SOUTHBOUND ON RAMP FROM COUNTY LINE Rd DETOUR

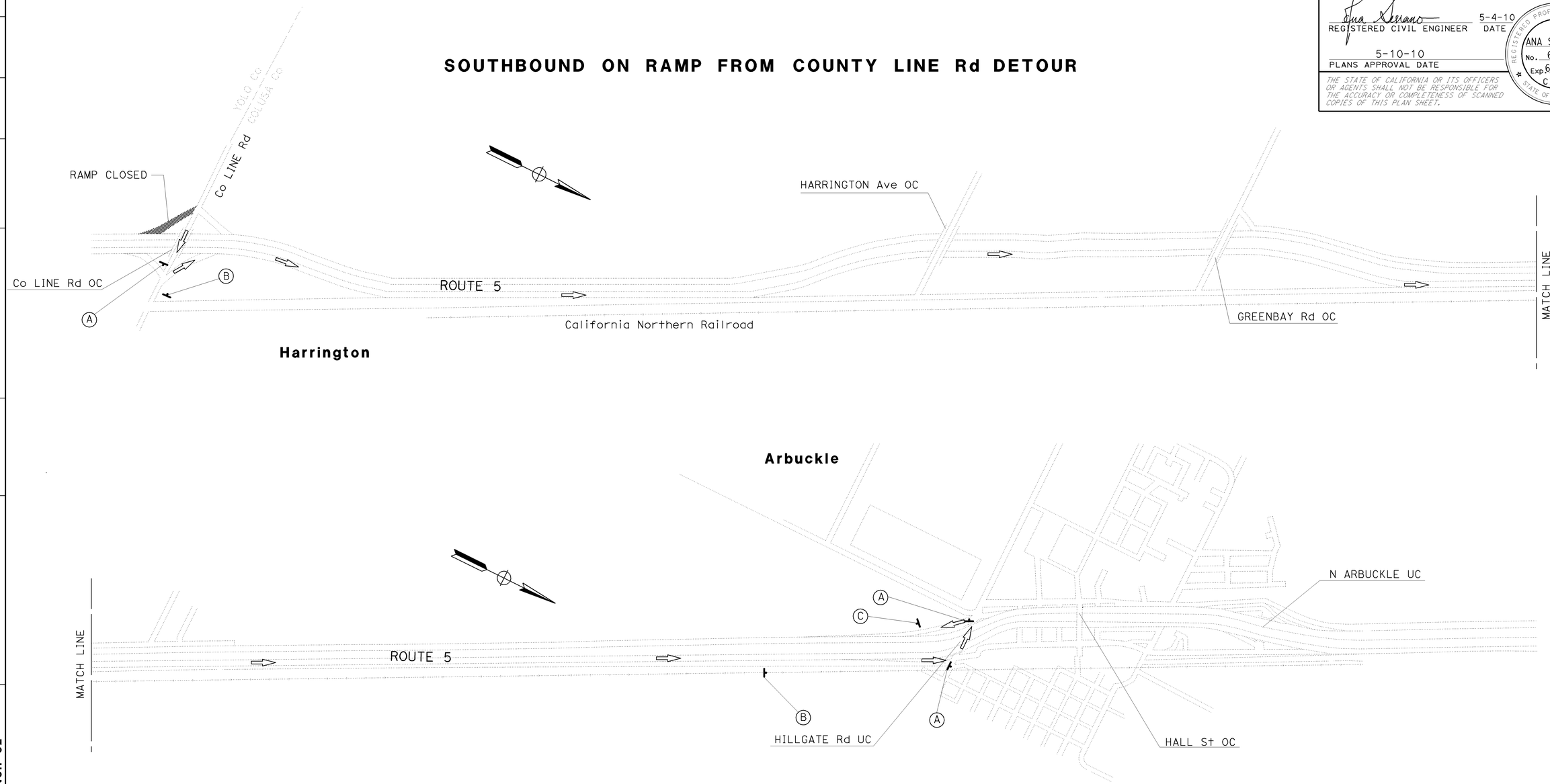

CONSTRUCTION AREA SIGNS

SIGN LETTER	SIGN CODE		PANEL SIZE	SIGN MESSAGE	NUMBER OF SIGNS
	FEDERAL	CALIFORNIA			
(A)	M4-10L	C5 (L†)	48" x 18"	DETOUR (INSIDE ARROW) L†	3
(B)	M4-10R	C5 (R†)	48" x 18"	DETOUR (INSIDE ARROW) R†	2
(C)	M4-8a	C7	24" x 18"	END DETOUR	1

THIS PLAN ACCURATE FOR DETOUR CONSTRUCTION WORK ONLY

DETOUR PLAN

NO SCALE **DE-2**

REVISED BY | DATE REVISED
ANA SERRANO | ANA SERRANO
CALCULATED-DESIGNED BY | CHECKED BY
FUNCTIONAL SUPERVISOR: GILBERT OGAZ
STATE OF CALIFORNIA - DEPARTMENT OF TRANSPORTATION
NORTH REGION
OFFICE OF DESIGN SOUTH
DESIGN BRANCH S2
Caltrans

LAST REVISION | DATE PLOTTED => 13-SEP-2010
TIME PLOTTED => 11:26
00-00-00

BORDER LAST REVISED 7/1/2010 | USERNAME => s128033 | DGN FILE => 33c890mg002.dgn | RELATIVE BORDER SCALE IS IN INCHES 0 1 2 3 | UNIT 0322 | PROJECT NUMBER & PHASE 03000011221

Dist	COUNTY	ROUTE	POST MILES TOTAL PROJECT	SHEET No.	TOTAL SHEETS
03	Yol, Col	5	R21.5/R23.8,R27.0/ R28.9,R0.0/R21.0	16	87

Ana Serrano — REGISTERED CIVIL ENGINEER — 5-4-10 DATE

5-10-10 PLANS APPROVAL DATE

REGISTERED PROFESSIONAL ENGINEER — ANA SERRANO No. 65977 Exp 6-30-12 CIVIL — STATE OF CALIFORNIA

THE STATE OF CALIFORNIA OR ITS OFFICERS OR AGENTS SHALL NOT BE RESPONSIBLE FOR THE ACCURACY OR COMPLETENESS OF SCANNED COPIES OF THIS PLAN SHEET.

SOUTHBOUND OFF RAMP TO COUNTY LINE Rd DETOUR

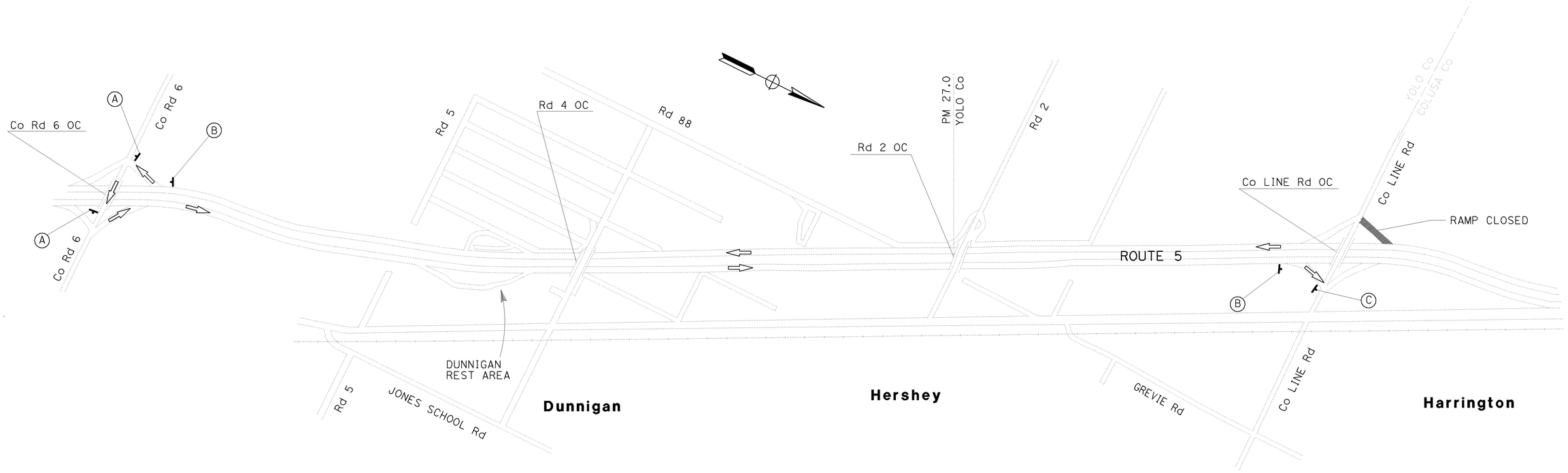

CONSTRUCTION AREA SIGNS

SIGN LETTER	SIGN CODE		PANEL SIZE	SIGN MESSAGE	NUMBER OF SIGNS
	FEDERAL	CALIFORNIA			
(A)	M4-10L	C5 (L†)	48" x 18"	DETOUR (INSIDE ARROW) L†	2
(B)	M4-10R	C5 (R†)	48" x 18"	DETOUR (INSIDE ARROW) R†	2
(C)	M4-8a	C7	24" x 18"	END DETOUR	1

THIS PLAN ACCURATE FOR DETOUR CONSTRUCTION WORK ONLY

DETOUR PLAN

NO SCALE **DE-3**

STATE OF CALIFORNIA - DEPARTMENT OF TRANSPORTATION
NORTH REGION
OFFICE OF DESIGN SOUTH
DESIGN BRANCH S2
Caltrans

FUNCTIONAL SUPERVISOR: GILBERT OGAZ

CALCULATED-DESIGNED BY: ANA SERRANO
CHECKED BY:

REVISED BY | DATE REVISED

LAST REVISION | DATE PLOTTED => 13-SEP-2010 | TIME PLOTTED => 11:26 | 00-00-00

BORDER LAST REVISED 7/1/2010

USERNAME => s128033
DGN FILE => 33c890mg003.dgn

RELATIVE BORDER SCALE IS IN INCHES 0 1 2 3

UNIT 0322

PROJECT NUMBER & PHASE 03000011221

Dist	COUNTY	ROUTE	POST MILES TOTAL PROJECT	SHEET No.	TOTAL SHEETS
03	Yol, Col	5	R21.5/R23.8,R27.0/ R28.9,R0.0/R21.0	17	87

Ana Serrano — REGISTERED CIVIL ENGINEER — 5-4-10 DATE

5-10-10 PLANS APPROVAL DATE

REGISTERED PROFESSIONAL ENGINEER — ANA SERRANO No. 65977 Exp 6-30-12 CIVIL — STATE OF CALIFORNIA

THE STATE OF CALIFORNIA OR ITS OFFICERS OR AGENTS SHALL NOT BE RESPONSIBLE FOR THE ACCURACY OR COMPLETENESS OF SCANNED COPIES OF THIS PLAN SHEET.

NORTHBOUND ON RAMP FROM COUNTY LINE RD DETOUR

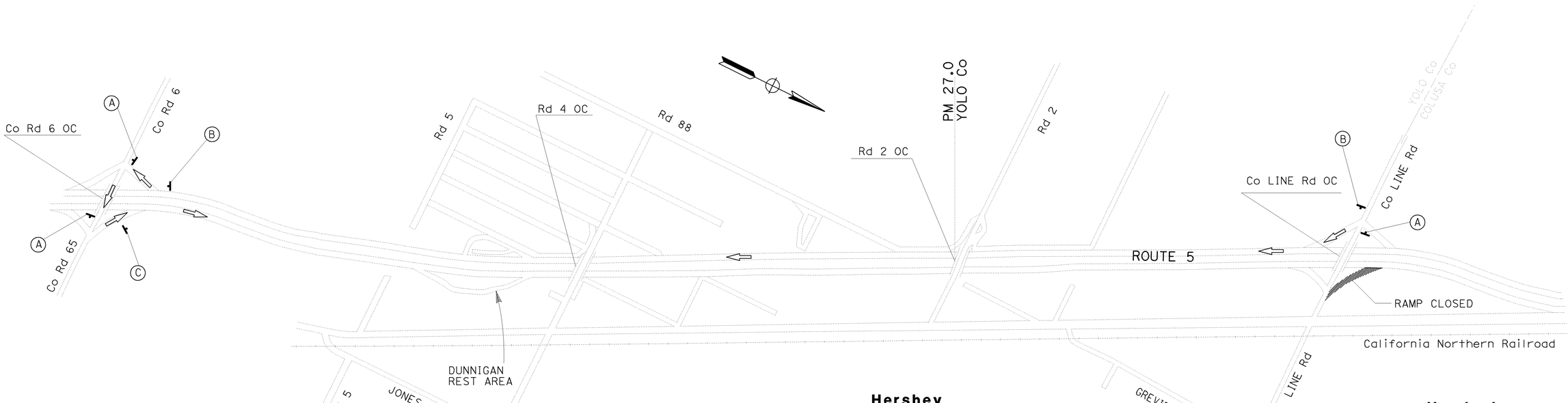

CONSTRUCTION AREA SIGNS

SIGN LETTER	SIGN CODE		PANEL SIZE	SIGN MESSAGE	NUMBER OF SIGNS
	FEDERAL	CALIFORNIA			
(A)	M4-10L	C5 (L†)	48" x 18"	DETOUR (INSIDE ARROW) L†	3
(B)	M4-10R	C5 (R†)	48" x 18"	DETOUR (INSIDE ARROW) R†	2
(C)	M4-8a	C7	24" x 18"	END DETOUR	1

DETOUR PLAN

NO SCALE

DE-4

THIS PLAN ACCURATE FOR DETOUR CONSTRUCTION WORK ONLY

STATE OF CALIFORNIA - DEPARTMENT OF TRANSPORTATION
Caltrans®
NORTH REGION
OFFICE OF DESIGN SOUTH
DESIGN BRANCH S2

FUNCTIONAL SUPERVISOR: GILBERT OGAZ

CALCULATED-DESIGNED BY: ANA SERRANO
CHECKED BY:

REVISED BY | DATE REVISED

LAST REVISION: DATE PLOTTED => 13-SEP-2010; TIME PLOTTED => 11:26; 00-00-00

BORDER LAST REVISED 7/1/2010

USERNAME => s128033
DGN FILE => 33c890mg004.dgn

RELATIVE BORDER SCALE IS IN INCHES 0 1 2 3

UNIT 0322

PROJECT NUMBER & PHASE 03000011221

Dist	COUNTY	ROUTE	POST MILES TOTAL PROJECT	SHEET No.	TOTAL SHEETS
03	Yol, Col	5	R21.5/R23.8,R27.0/ R28.9,R0.0/R21.0	18	87

Ana Serrano — REGISTERED CIVIL ENGINEER — 5-4-10 DATE

5-10-10 PLANS APPROVAL DATE

REGISTERED PROFESSIONAL ENGINEER — ANA SERRANO No. 65977 Exp 6-30-12 CIVIL — STATE OF CALIFORNIA

THE STATE OF CALIFORNIA OR ITS OFFICERS OR AGENTS SHALL NOT BE RESPONSIBLE FOR THE ACCURACY OR COMPLETENESS OF SCANNED COPIES OF THIS PLAN SHEET.

SOUTHBOUND OFF RAMP TO HILLGATE RD DETOUR

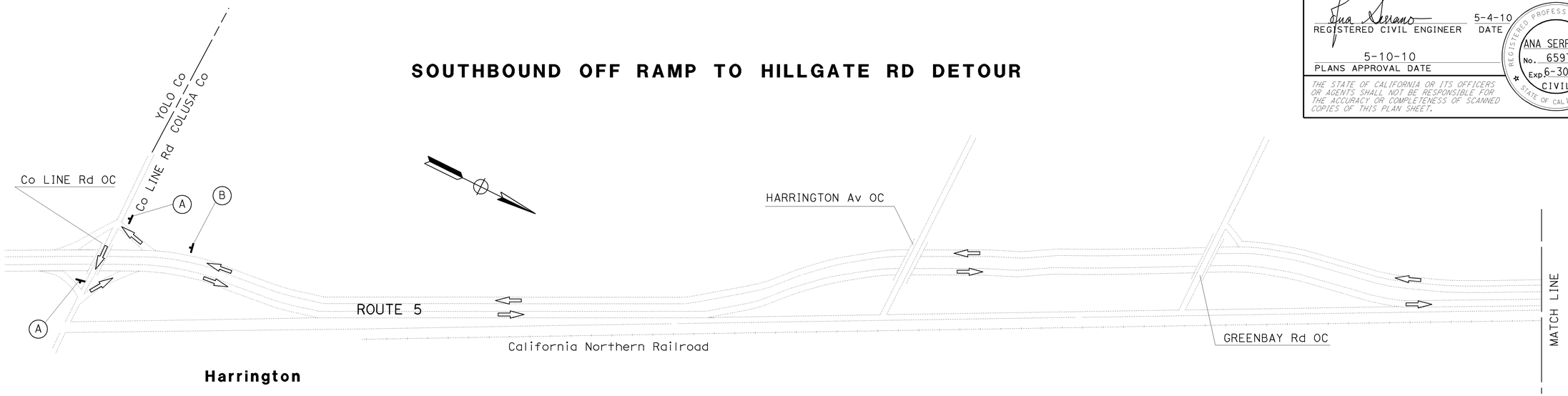

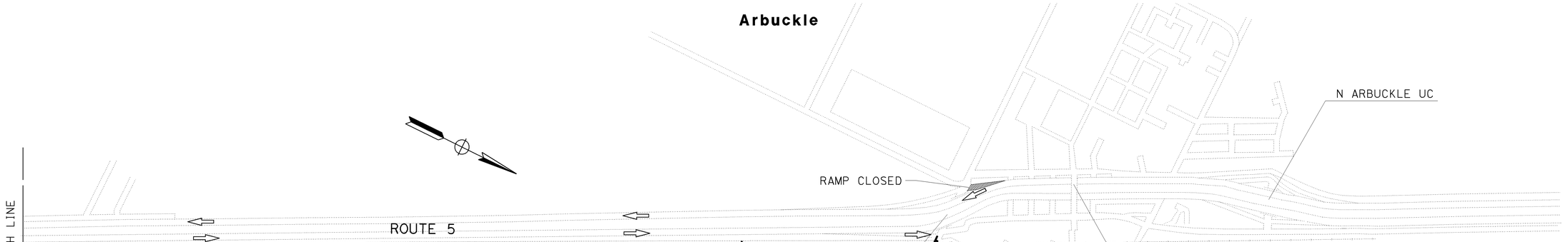

CONSTRUCTION AREA SIGNS

SIGN LETTER	SIGN CODE FEDERAL	SIGN CODE CALIFORNIA	PANEL SIZE	SIGN MESSAGE	NUMBER OF SIGNS
(A)	M4-10L	C5 (L†)	48" x 18"	DETOUR (INSIDE ARROW) L†	2
(B)	M4-10R	C5 (R†)	48" x 18"	DETOUR (INSIDE ARROW) R†	2
(C)	M4-8a	C7	24" x 18"	END DETOUR	1

THIS PLAN ACCURATE FOR DETOUR CONSTRUCTION WORK ONLY

DETOUR PLAN

NO SCALE

DE-5

STATE OF CALIFORNIA - DEPARTMENT OF TRANSPORTATION
NORTH REGION
OFFICE OF DESIGN SOUTH
DESIGN BRANCH S2

FUNCTIONAL SUPERVISOR: GILBERT OGAZ

CALCULATED-DESIGNED BY: ANA SERRANO
CHECKED BY: ANA SERRANO

REVISED BY | DATE REVISED

LAST REVISION | DATE PLOTTED => 13-SEP-2010 | TIME PLOTTED => 11:26 | 00-00-00

BORDER LAST REVISED 7/1/2010

USERNAME => s128033
DGN FILE => 33c890mg005.dgn

RELATIVE BORDER SCALE IS IN INCHES 0 1 2 3

UNIT 0322

PROJECT NUMBER & PHASE 03000011221

Dist	COUNTY	ROUTE	POST MILES TOTAL PROJECT	SHEET No.	TOTAL SHEETS
03	Yol, Col	5	R21.5/R23.8,R27.0/ R28.9,R0.0/R21.0	19	87

Ana Serrano — REGISTERED CIVIL ENGINEER — 5-4-10 DATE

5-10-10 PLANS APPROVAL DATE

REGISTERED PROFESSIONAL ENGINEER — ANA SERRANO No. 65977 Exp 6-30-12 CIVIL — STATE OF CALIFORNIA

THE STATE OF CALIFORNIA OR ITS OFFICERS OR AGENTS SHALL NOT BE RESPONSIBLE FOR THE ACCURACY OR COMPLETENESS OF SCANNED COPIES OF THIS PLAN SHEET.

NORTHBOUND OFF RAMP TO HILLGATE Rd DETOUR

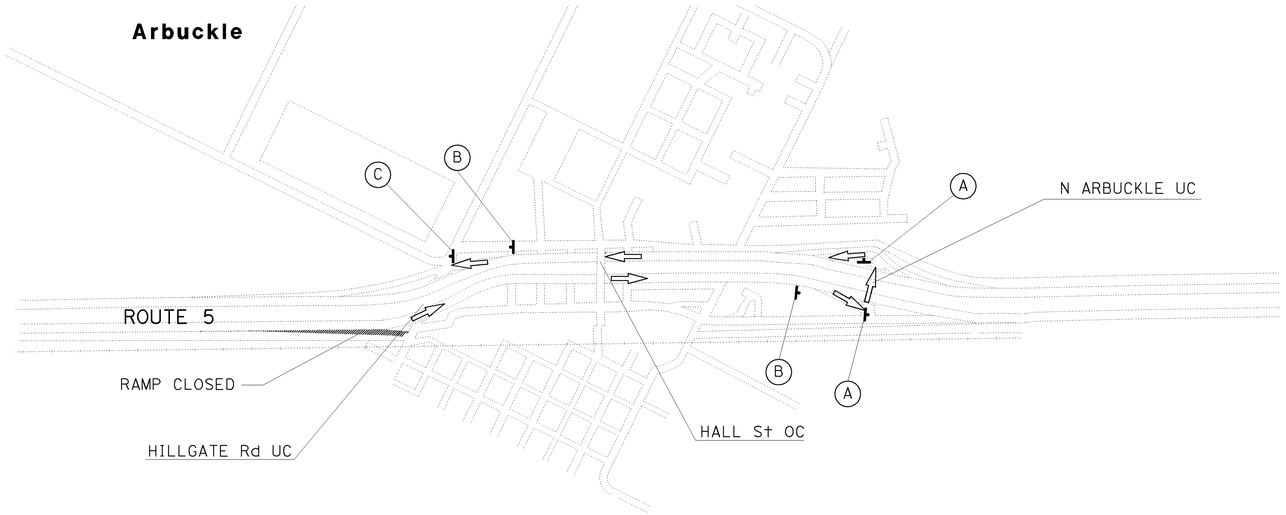

SOUTHBOUND ON RAMP FROM HILLGATE Rd DETOUR

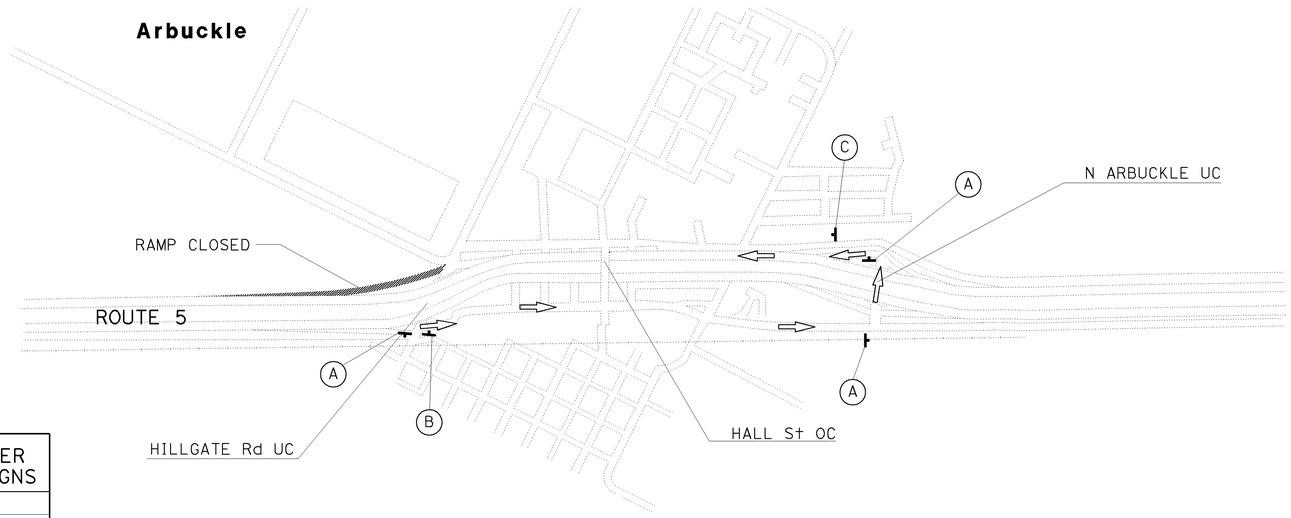

CONSTRUCTION AREA SIGNS

SIGN LETTER	SIGN CODE FEDERAL	SIGN CODE CALIFORNIA	PANEL SIZE	SIGN MESSAGE	NUMBER OF POST AND SIZE	NUMBER OF SIGNS
(A)	M4-10L	C5 (L†)	48" x 18"	DETOUR (INSIDE ARROW) L†	1-4" x 4"	5
(B)	M4-10R	C5 (R†)	48" x 18"	DETOUR (INSIDE ARROW) R†	1-4" x 4"	3
(C)	M4-8a	C7	24" x 18"	END DETOUR	1-4" x 4"	2

THIS PLAN ACCURATE FOR DETOUR CONSTRUCTION WORK ONLY

DETOUR PLAN

NO SCALE

DE-6

REVISED BY | DATE REVISED

CALCULATED-DESIGNED BY: ANA SERRANO
CHECKED BY: ANA SERRANO

FUNCTIONAL SUPERVISOR: GILBERT OGAZ

STATE OF CALIFORNIA - DEPARTMENT OF TRANSPORTATION
NORTH REGION
OFFICE OF DESIGN SOUTH
DESIGN BRANCH S2

Caltrans

LAST REVISION — DATE PLOTTED => 13-SEP-2010 — TIME PLOTTED => 11:26 — 00-00-00

BORDER LAST REVISED 7/1/2010

USERNAME => s128033
DGN FILE => 33c890mg006.dgn

RELATIVE BORDER SCALE IS IN INCHES 0 1 2 3

UNIT 0322

PROJECT NUMBER & PHASE 03000011221

Dist	COUNTY	ROUTE	POST MILES TOTAL PROJECT	SHEET No.	TOTAL SHEETS
03	Yol, Col	5	R21.5/R23.8,R27.0/ R28.9,R0.0/R21.0	20	87

Ana Serrano — REGISTERED CIVIL ENGINEER — 5-4-10 DATE

5-10-10 PLANS APPROVAL DATE

ANA SERRANO No. 65977 Exp 6-30-12 CIVIL — REGISTERED PROFESSIONAL ENGINEER — STATE OF CALIFORNIA

THE STATE OF CALIFORNIA OR ITS OFFICERS OR AGENTS SHALL NOT BE RESPONSIBLE FOR THE ACCURACY OR COMPLETENESS OF SCANNED COPIES OF THIS PLAN SHEET.

NORTHBOUND ON RAMP FROM PUTMAN WAY DETOUR

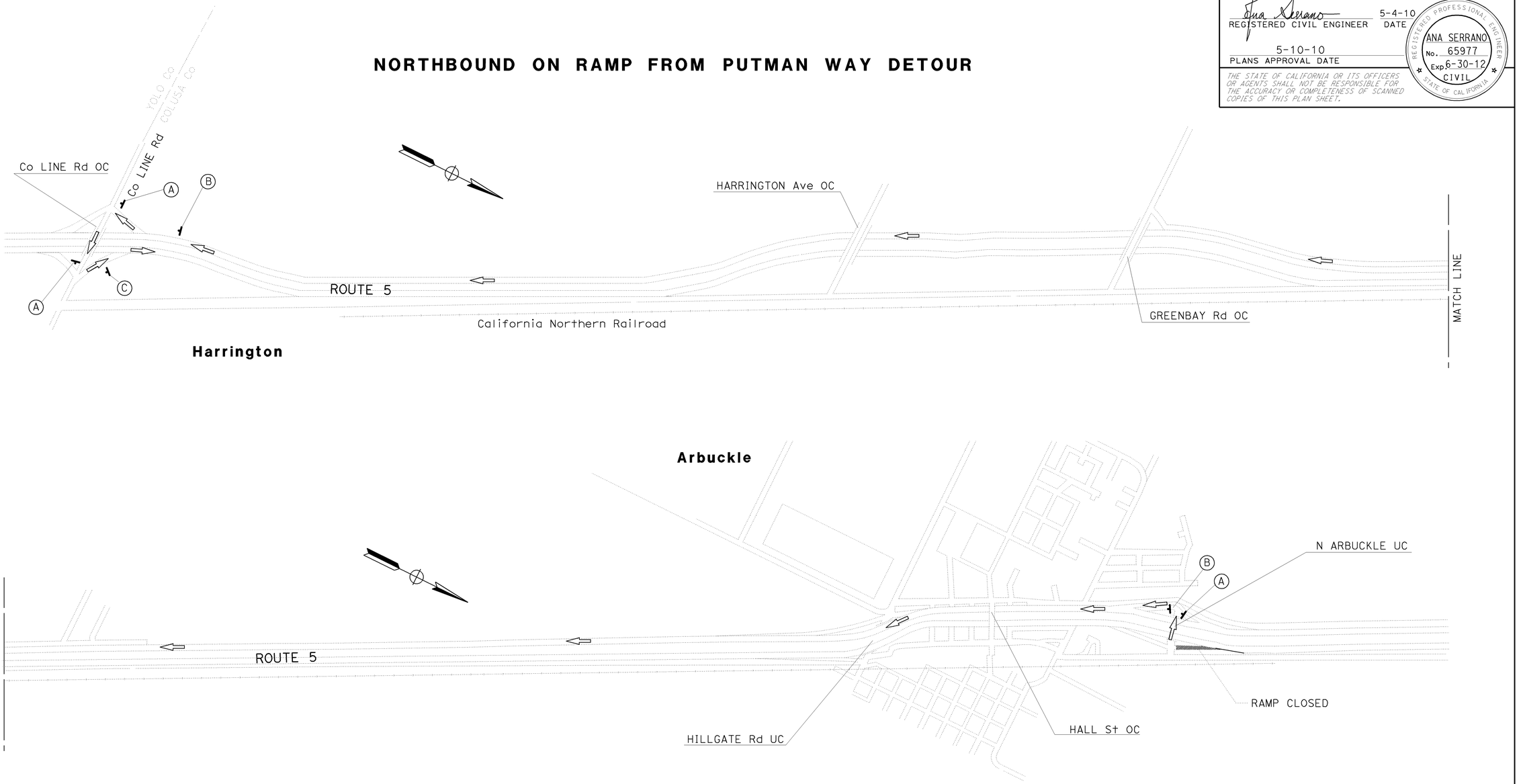

CONSTRUCTION AREA SIGNS

SIGN LETTER	SIGN CODE		PANEL SIZE	SIGN MESSAGE	NUMBER OF SIGNS
	FEDERAL	CALIFORNIA			
(A)	M4-10L	C5 (Lt)	48" x 18"	DETOUR (INSIDE ARROW) Lt	3
(B)	M4-10R	C5 (Rt)	48" x 18"	DETOUR (INSIDE ARROW) Rt	2
(C)	M4-8a	C7	24" x 18"	END DETOUR	1

THIS PLAN ACCURATE FOR DETOUR CONSTRUCTION WORK ONLY

DETOUR PLAN

NO SCALE

DE-7

REVISED BY | DATE REVISED

ANA SERRANO | ANA SERRANO

CALCULATED-DESIGNED BY | CHECKED BY

FUNCTIONAL SUPERVISOR: GILBERT OGAZ

STATE OF CALIFORNIA - DEPARTMENT OF TRANSPORTATION
Caltrans
NORTH REGION
OFFICE OF DESIGN SOUTH
DESIGN BRANCH S2

LAST REVISION | DATE PLOTTED => 13-SEP-2010 | 00-00-00 | TIME PLOTTED => 11:26

BORDER LAST REVISED 7/1/2010

USERNAME => s128033
DGN FILE => 33c890mg007.dgn

RELATIVE BORDER SCALE IS IN INCHES 0 1 2 3

UNIT 0322

PROJECT NUMBER & PHASE 03000011221

Dist	COUNTY	ROUTE	POST MILES TOTAL PROJECT	SHEET No.	TOTAL SHEETS
03	Yol, Col	5	R21.5/R23.8,R27.0/ R28.9,R0.0/R21.0	21	87

Ana Serrano — REGISTERED CIVIL ENGINEER — 5-4-10 DATE

5-10-10 PLANS APPROVAL DATE

REGISTERED PROFESSIONAL ENGINEER — ANA SERRANO No. 65977 Exp 6-30-12 CIVIL — STATE OF CALIFORNIA

THE STATE OF CALIFORNIA OR ITS OFFICERS OR AGENTS SHALL NOT BE RESPONSIBLE FOR THE ACCURACY OR COMPLETENESS OF SCANNED COPIES OF THIS PLAN SHEET.

SOUTHBOUND OFF RAMP TO PUTMAN LATERAL DETOUR

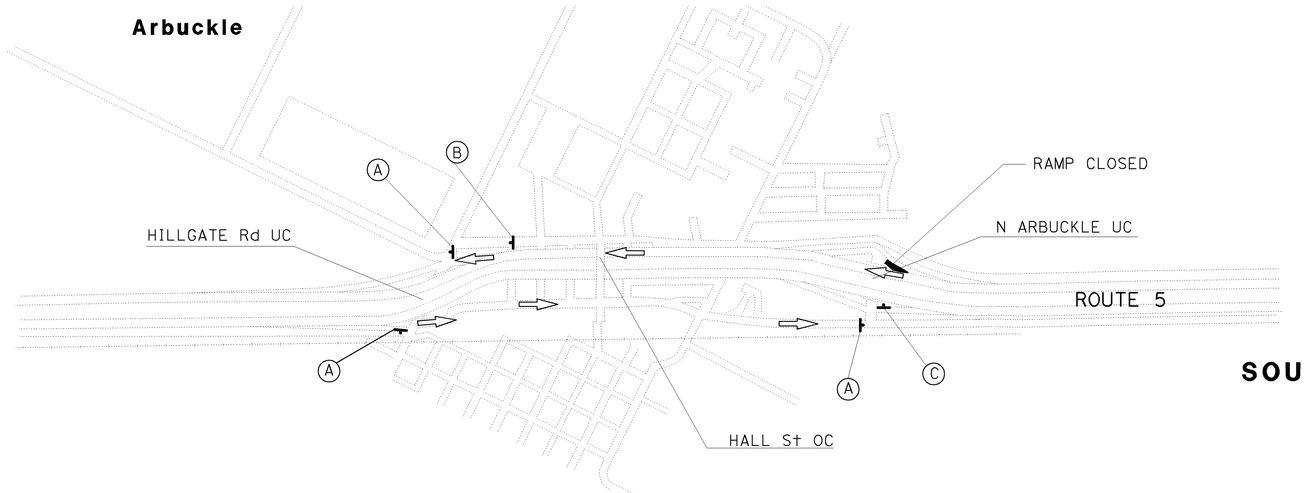

SOUTHBOUND ON RAMP FROM PUTMAN LATERAL DETOUR

CONSTRUCTION AREA SIGNS

SIGN LETTER	SIGN CODE		PANEL SIZE	SIGN MESSAGE	NUMBER OF SIGNS
	FEDERAL	CALIFORNIA			
(A)	M4-10L	C5 (Lt)	48" x 18"	DETOUR (INSIDE ARROW) Lt	4
(B)	M4-10R	C5 (Rt)	48" x 18"	DETOUR (INSIDE ARROW) Rt	3
(C)	M4-8a	C7	24" x 18"	END DETOUR	2
(D)		SC9	36" x 36"	FWY DETOUR	1

THIS PLAN ACCURATE FOR DETOUR CONSTRUCTION WORK ONLY

DETOUR PLAN

NO SCALE

DE-8

STATE OF CALIFORNIA - DEPARTMENT OF TRANSPORTATION
Caltrans
NORTH REGION
OFFICE OF DESIGN SOUTH
DESIGN BRANCH S2

FUNCTIONAL SUPERVISOR: GILBERT OGAZ

CALCULATED-DESIGNED BY:
CHECKED BY:

REVISED BY	DATE REVISED
ANA SERRANO	ANA SERRANO

LAST REVISION DATE PLOTTED => 13-SEP-2010
TIME PLOTTED => 11:26
00-00-00

BORDER LAST REVISED 7/1/2010

USERNAME => s128033
DGN FILE => 33c890mg008.dgn

RELATIVE BORDER SCALE IS IN INCHES 0 1 2 3

UNIT 0322

PROJECT NUMBER & PHASE 03000011221

Dist	COUNTY	ROUTE	POST MILES TOTAL PROJECT	SHEET No.	TOTAL SHEETS
03	Yol, Col	5	R21.5/R23.8,R27.0/ R28.9,R0.0/R21.0	22	87

Ana Serrano
REGISTERED CIVIL ENGINEER — 5-4-10 DATE

5-10-10
PLANS APPROVAL DATE

REGISTERED PROFESSIONAL ENGINEER — ANA SERRANO No. 65977 Exp 6-30-12 CIVIL — STATE OF CALIFORNIA

THE STATE OF CALIFORNIA OR ITS OFFICERS OR AGENTS SHALL NOT BE RESPONSIBLE FOR THE ACCURACY OR COMPLETENESS OF SCANNED COPIES OF THIS PLAN SHEET.

CONSTRUCTION AREA SIGNS

SIGN LETTER	SIGN CODE		PANEL SIZE	SIGN MESSAGE	NUMBER OF SIGNS
	FEDERAL	CALIFORNIA			
(A)	M4-10L	C5 (L†)	48" x 18"	DETOUR (INSIDE ARROW) L†	2
(B)	M4-10R	C5 (R†)	48" x 18"	DETOUR (INSIDE ARROW) R†	2
(C)	M4-8a	C7	24" x 18"	END DETOUR	1

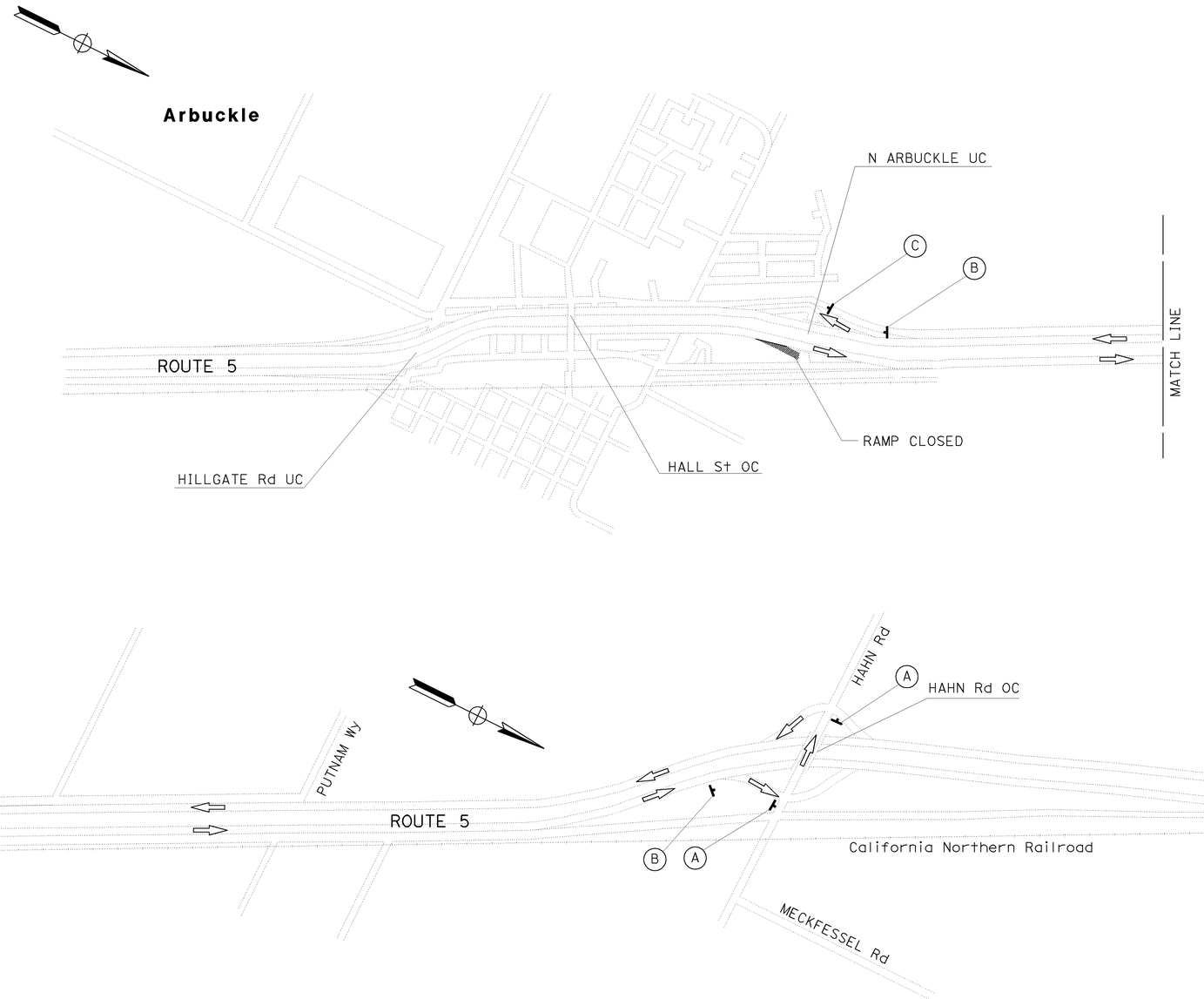

NORTHBOUND OFF RAMP TO PUTNAM LATERAL DETOUR

THIS PLAN ACCURATE FOR DETOUR CONSTRUCTION WORK ONLY

DETOUR PLAN
NO SCALE **DE-9**

STATE OF CALIFORNIA - DEPARTMENT OF TRANSPORTATION
Caltrans®
NORTH REGION
OFFICE OF DESIGN SOUTH
DESIGN BRANCH S2

FUNCTIONAL SUPERVISOR: GILBERT OGAZ
CALCULATED-DESIGNED BY: ANA SERRANO
CHECKED BY: ANA SERRANO
REVISED BY
DATE REVISED

LAST REVISION: DATE PLOTTED => 13-SEP-2010 TIME PLOTTED => 11:26
00-00-00

BORDER LAST REVISED 7/1/2010
USERNAME => s128033
DGN FILE => 33c890mg009.dgn
RELATIVE BORDER SCALE IS IN INCHES 0 1 2 3
UNIT 0322
PROJECT NUMBER & PHASE 03000011221

Dist	COUNTY	ROUTE	POST MILES TOTAL PROJECT	SHEET No.	TOTAL SHEETS
03	Yol, Col	5	R21.5/R23.8,R27.0/ R28.9,R0.0/R21.0	23	87

Ana Serrano — REGISTERED CIVIL ENGINEER — 5-4-10 DATE

5-10-10 PLANS APPROVAL DATE

REGISTERED PROFESSIONAL ENGINEER — ANA SERRANO No. 65977 Exp 6-30-12 CIVIL — STATE OF CALIFORNIA

THE STATE OF CALIFORNIA OR ITS OFFICERS OR AGENTS SHALL NOT BE RESPONSIBLE FOR THE ACCURACY OR COMPLETENESS OF SCANNED COPIES OF THIS PLAN SHEET.

CONSTRUCTION AREA SIGNS

SIGN LETTER	SIGN CODE		PANEL SIZE	SIGN MESSAGE	NUMBER OF SIGNS
	FEDERAL	CALIFORNIA			
(A)	M4-10L	C5 (Lt)	48" x 18"	DETOUR (INSIDE ARROW) Lt	2
(B)	M4-10R	C5 (Rt)	48" x 18"	DETOUR (INSIDE ARROW) Rt	2
(C)	M4-8a	C7	24" x 18"	END DETOUR	1

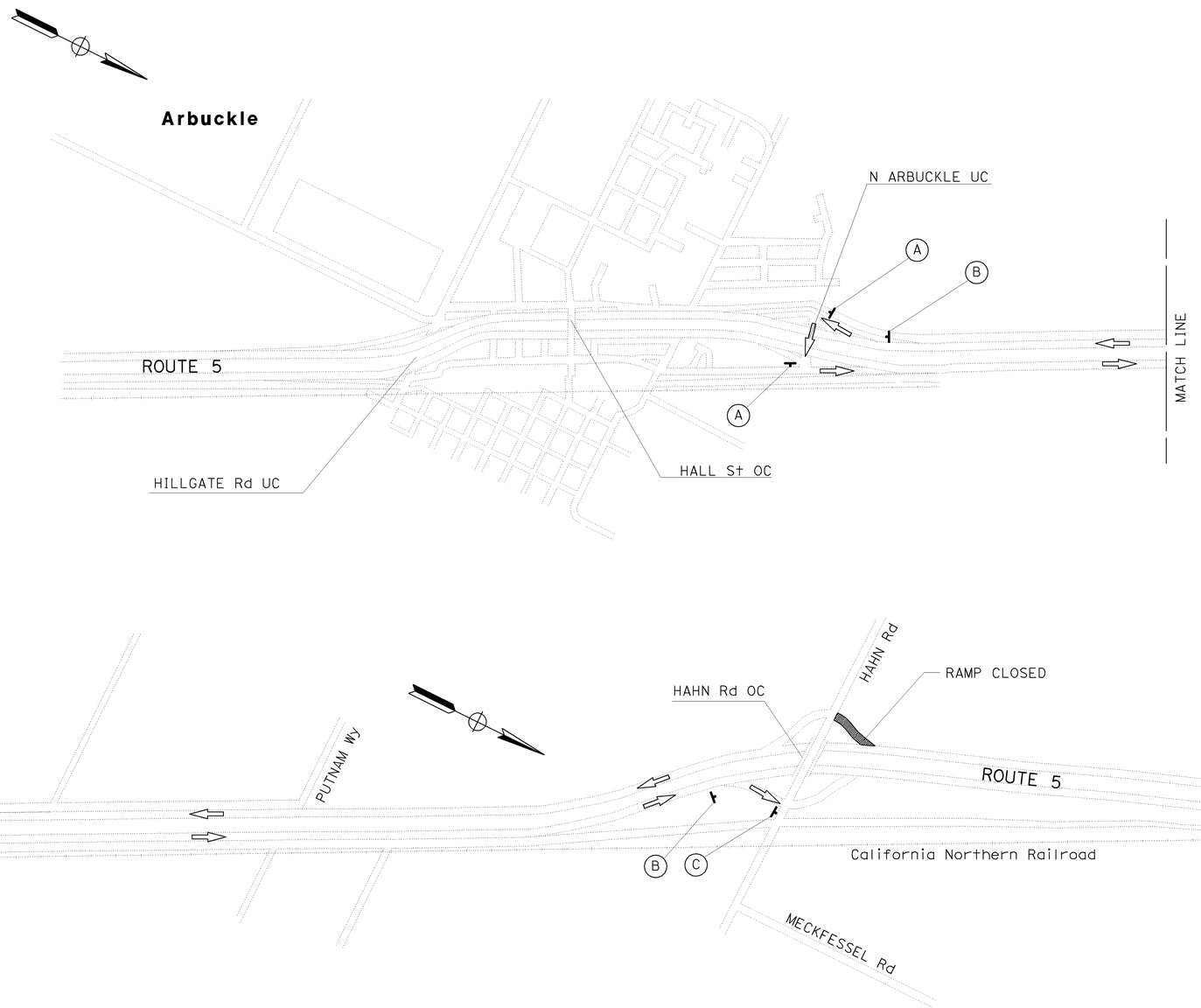

SOUTHBOUND OFF RAMP TO HAHN Rd DETOUR

THIS PLAN ACCURATE FOR DETOUR CONSTRUCTION WORK ONLY

DETOUR PLAN

NO SCALE

DE-10

REVISED BY | DATE REVISED

ANA SERRANO | ANA SERRANO

CALCULATED-DESIGNED BY | CHECKED BY

FUNCTIONAL SUPERVISOR: GILBERT OGAZ

STATE OF CALIFORNIA - DEPARTMENT OF TRANSPORTATION
Caltrans
NORTH REGION
OFFICE OF DESIGN SOUTH
DESIGN BRANCH S2

LAST REVISION | DATE PLOTTED => 13-SEP-2010 | 00-00-00 | TIME PLOTTED => 11:26

BORDER LAST REVISED 7/1/2010

USERNAME => s128033
DGN FILE => 33c890mg010.dgn

RELATIVE BORDER SCALE IS IN INCHES 0 1 2 3

UNIT 0322

PROJECT NUMBER & PHASE 03000011221

Dist	COUNTY	ROUTE	POST MILES TOTAL PROJECT	SHEET No.	TOTAL SHEETS
03	Yol, Col	5	R21.5/R23.8,R27.0/ R28.9,R0.0/R21.0	24	87

REGISTERED CIVIL ENGINEER 5-4-10 DATE

5-10-10
PLANS APPROVAL DATE

REGISTERED PROFESSIONAL ENGINEER ANA SERRANO No. 65977 Exp. 6-30-12 CIVIL STATE OF CALIFORNIA

THE STATE OF CALIFORNIA OR ITS OFFICERS OR AGENTS SHALL NOT BE RESPONSIBLE FOR THE ACCURACY OR COMPLETENESS OF SCANNED COPIES OF THIS PLAN SHEET.

CONSTRUCTION AREA SIGNS

SIGN LETTER	SIGN CODE FEDERAL	SIGN CODE CALIFORNIA	PANEL SIZE	SIGN MESSAGE	NUMBER OF SIGNS
A	M4-10L	C5 (Lt)	48" x 18"	DETOUR (INSIDE ARROW) Lt	3
B	M4-10R	C5 (Rt)	48" x 18"	DETOUR (INSIDE ARROW) Rt	2
C	M4-8a	C7	24" x 18"	END DETOUR	1

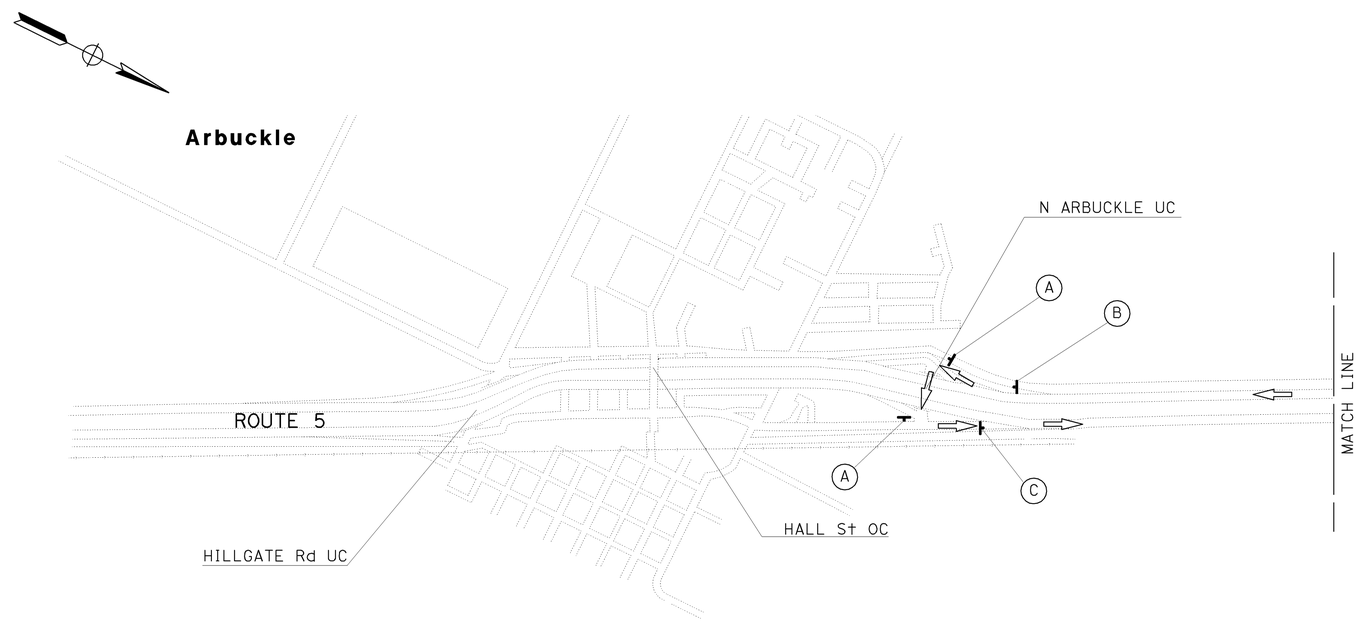

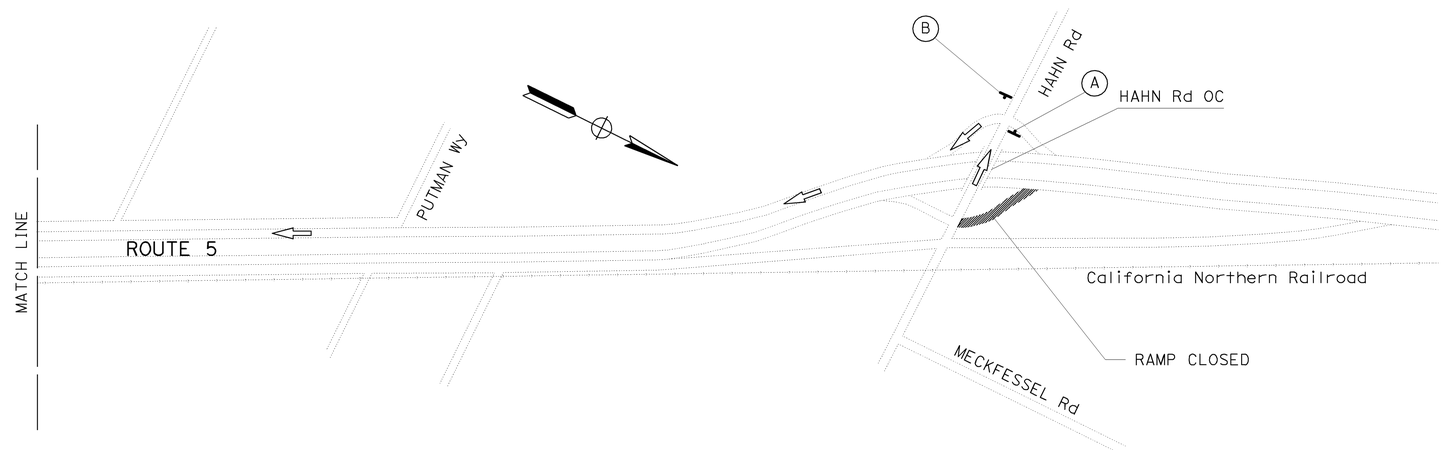

NORTHBOUND ON RAMP FROM HAHN RD DETOUR

THIS PLAN ACCURATE FOR DETOUR CONSTRUCTION WORK ONLY

DETOUR PLAN

NO SCALE

DE-11

STATE OF CALIFORNIA - DEPARTMENT OF TRANSPORTATION
Caltrans
NORTH REGION
OFFICE OF DESIGN SOUTH
DESIGN BRANCH S2

FUNCTIONAL SUPERVISOR: GILBERT OGAZ
CALCULATED-DESIGNED BY: ANA SERRANO
CHECKED BY: ANA SERRANO
REVISED BY
DATE REVISED

LAST REVISION 00-00-00
DATE PLOTTED => 13-SEP-2010
TIME PLOTTED => 11:26

Dist	COUNTY	ROUTE	POST MILES TOTAL PROJECT	SHEET No.	TOTAL SHEETS
03	Yol, Col	5	R21.5/R23.8,R27.0/ R28.9,R0.0/R21.0	25	87

Ana Serrano — REGISTERED CIVIL ENGINEER — 5-4-10 DATE

5-10-10 PLANS APPROVAL DATE

REGISTERED PROFESSIONAL ENGINEER — ANA SERRANO No. 65977 Exp 6-30-12 CIVIL — STATE OF CALIFORNIA

THE STATE OF CALIFORNIA OR ITS OFFICERS OR AGENTS SHALL NOT BE RESPONSIBLE FOR THE ACCURACY OR COMPLETENESS OF SCANNED COPIES OF THIS PLAN SHEET.

CONSTRUCTION AREA SIGNS

SIGN LETTER	SIGN CODE FEDERAL	SIGN CODE CALIFORNIA	PANEL SIZE	SIGN MESSAGE	NUMBER OF SIGNS
(A)	M4-10L	C5 (L†)	48" x 18"	DETOUR (INSIDE ARROW) L†	2
(B)	M4-10R	C5 (R†)	48" x 18"	DETOUR (INSIDE ARROW) R†	2
(C)	M4-8a	C7	24" x 18"	END DETOUR	1

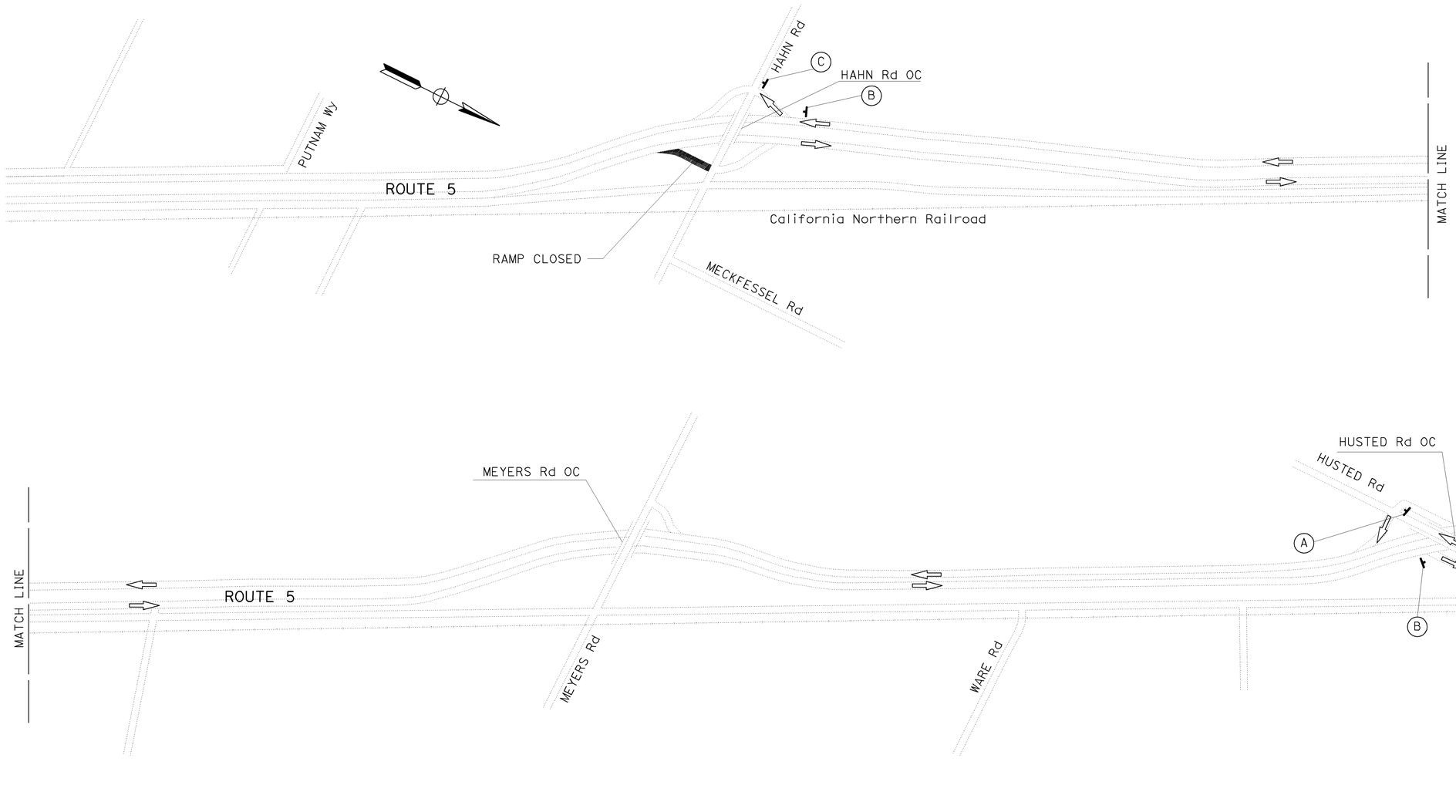

NORTHBOUND OFF RAMP TO HAHN Rd DETOUR

THIS PLAN ACCURATE FOR DETOUR CONSTRUCTION WORK ONLY

DETOUR PLAN

NO SCALE **DE-12**

CALCULATED-DESIGNED BY: ANA SERRANO
CHECKED BY: ANA SERRANO
REVISED BY
DATE REVISED

FUNCTIONAL SUPERVISOR: GILBERT OGAZ

STATE OF CALIFORNIA - DEPARTMENT OF TRANSPORTATION
Caltrans®
NORTH REGION
OFFICE OF DESIGN SOUTH
DESIGN BRANCH S2

LAST REVISION: DATE PLOTTED => 13-SEP-2010 TIME PLOTTED => 11:26 00-00-00

BORDER LAST REVISED 7/1/2010
USERNAME => s128033
DGN FILE => 33c890mg012.dgn
RELATIVE BORDER SCALE IS IN INCHES 0 1 2 3
UNIT 0322
PROJECT NUMBER & PHASE 03000011221

Dist	COUNTY	ROUTE	POST MILES TOTAL PROJECT	SHEET No.	TOTAL SHEETS
03	Yol, Col	5	R21.5/R23.8,R27.0/ R28.9,R0.0/R21.0	26	87

Ana Serrano — REGISTERED CIVIL ENGINEER — 5-4-10 DATE

5-10-10 PLANS APPROVAL DATE

REGISTERED PROFESSIONAL ENGINEER — ANA SERRANO No. 65977 Exp 6-30-12 CIVIL — STATE OF CALIFORNIA

THE STATE OF CALIFORNIA OR ITS OFFICERS OR AGENTS SHALL NOT BE RESPONSIBLE FOR THE ACCURACY OR COMPLETENESS OF SCANNED COPIES OF THIS PLAN SHEET.

CONSTRUCTION AREA SIGNS

SIGN LETTER	SIGN CODE		PANEL SIZE	SIGN MESSAGE	NUMBER OF SIGNS
	FEDERAL	CALIFORNIA			
(A)	M4-10L	C5 (L†)	48" x 18"	DETOUR (INSIDE ARROW) L†	3
(B)	M4-10R	C5 (R†)	48" x 18"	DETOUR (INSIDE ARROW) R†	2
(C)	M4-8a	C7	24" x 18"	END DETOUR	1

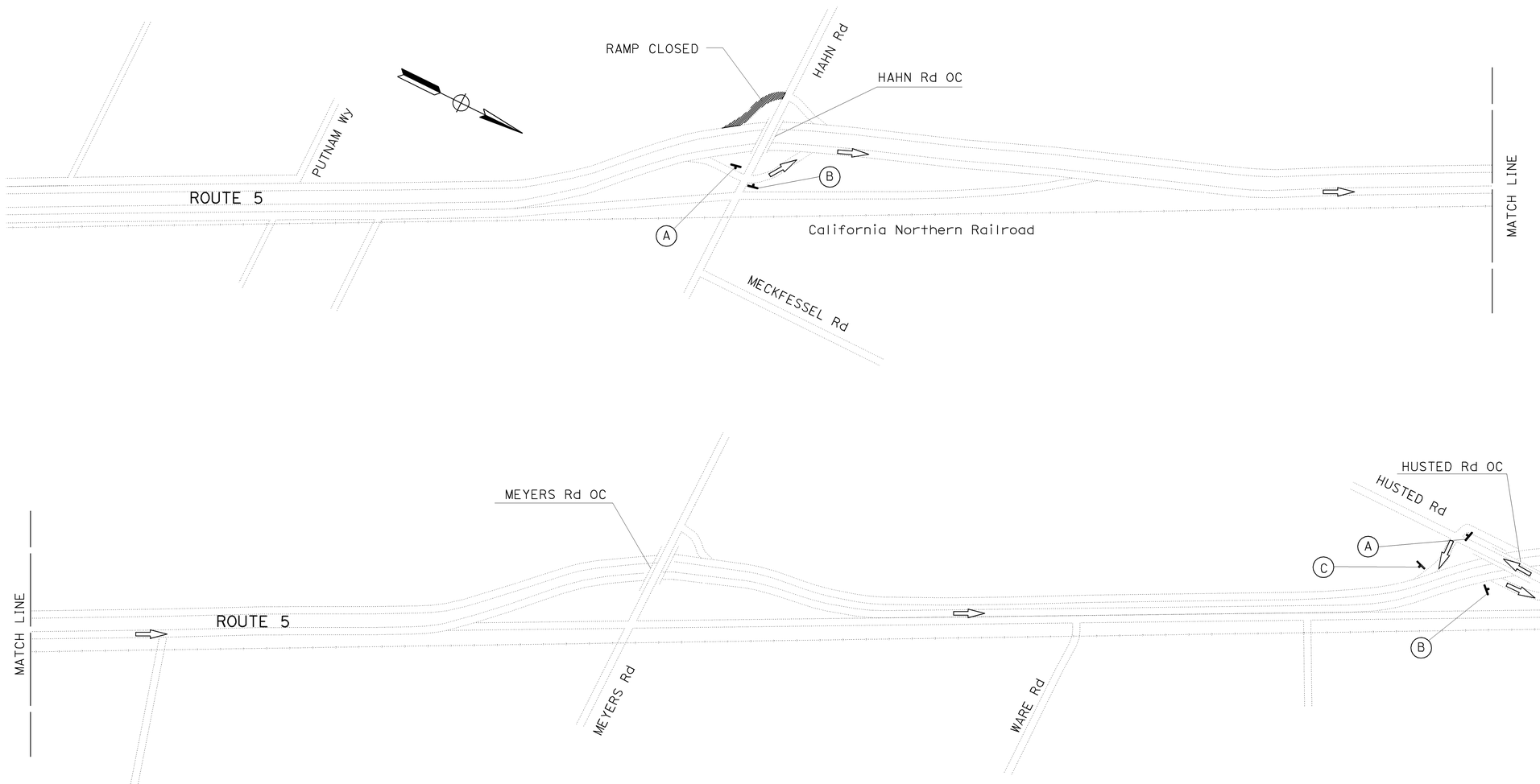

SOUTHBOUND ON RAMP FROM HAHN RD DETOUR

THIS PLAN ACCURATE FOR DETOUR CONSTRUCTION WORK ONLY

DETOUR PLAN

NO SCALE

DE-13

STATE OF CALIFORNIA - DEPARTMENT OF TRANSPORTATION
NORTH REGION
OFFICE OF DESIGN SOUTH
DESIGN BRANCH S2

FUNCTIONAL SUPERVISOR: GILBERT OGAZ

CALCULATED-DESIGNED BY: ANA SERRANO
CHECKED BY: ANA SERRANO
REVISED BY
DATE REVISED

LAST REVISION 00-00-00
DATE PLOTTED => 13-SEP-2010
TIME PLOTTED => 11:26

Dist	COUNTY	ROUTE	POST MILES TOTAL PROJECT	SHEET No.	TOTAL SHEETS
03	Yol, Col	5	R21.5/R23.8,R27.0/ R28.9,R0.0/R21.0	27	87

Ana Serrano — REGISTERED CIVIL ENGINEER — 5-4-10 DATE

5-10-10 PLANS APPROVAL DATE

REGISTERED PROFESSIONAL ENGINEER — ANA SERRANO No. 65977 Exp 6-30-12 CIVIL — STATE OF CALIFORNIA

THE STATE OF CALIFORNIA OR ITS OFFICERS OR AGENTS SHALL NOT BE RESPONSIBLE FOR THE ACCURACY OR COMPLETENESS OF SCANNED COPIES OF THIS PLAN SHEET.

CONSTRUCTION AREA SIGNS

SIGN LETTER	SIGN CODE		PANEL SIZE	SIGN MESSAGE	NUMBER OF SIGNS
	FEDERAL	CALIFORNIA			
(A)	M4-10L	C5 (L†)	48" x 18"	DETOUR (INSIDE ARROW) L†	3
(B)	M4-10R	C5 (R†)	48" x 18"	DETOUR (INSIDE ARROW) R†	2
(C)	M4-8a	C7	24" x 18"	END DETOUR	1

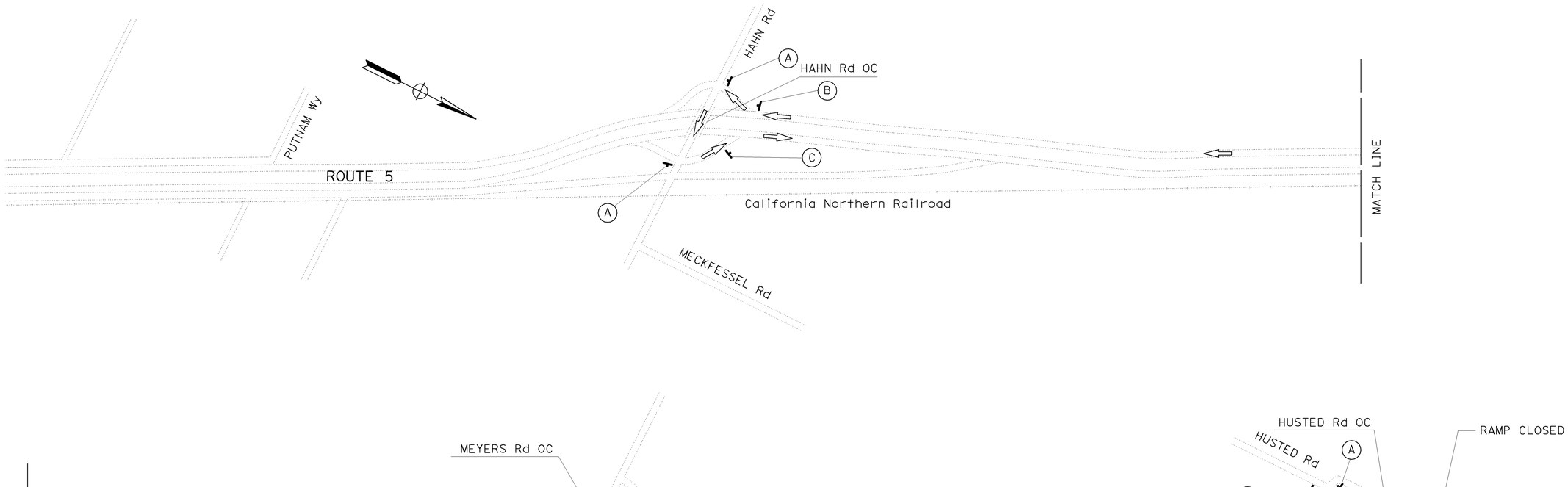

NORTHBOUND ON RAMP FROM HUSTED RD DETOUR

THIS PLAN ACCURATE FOR DETOUR CONSTRUCTION WORK ONLY

DETOUR PLAN

NO SCALE

DE-14

STATE OF CALIFORNIA - DEPARTMENT OF TRANSPORTATION
NORTH REGION
OFFICE OF DESIGN SOUTH
DESIGN BRANCH S2

Caltrans

FUNCTIONAL SUPERVISOR: GILBERT OGAZ

CALCULATED-DESIGNED BY: ANA SERRANO

CHECKED BY: ANA SERRANO

REVISED BY | DATE REVISED

LAST REVISION: DATE PLOTTED => 13-SEP-2010 TIME PLOTTED => 11:26 — 00-00-00

BORDER LAST REVISED 7/1/2010

USERNAME => s128033
DGN FILE => 33c890mg014.dgn

RELATIVE BORDER SCALE IS IN INCHES 0 1 2 3

UNIT 0322

PROJECT NUMBER & PHASE 03000011221

Dist	COUNTY	ROUTE	POST MILES TOTAL PROJECT	SHEET No.	TOTAL SHEETS
03	Yol, Col	5	R21.5/R23.8,R27.0/ R28.9,R0.0/R21.0	28	87

Ana Serrano — REGISTERED CIVIL ENGINEER — 5-4-10 DATE

5-10-10 PLANS APPROVAL DATE

REGISTERED PROFESSIONAL ENGINEER — ANA SERRANO No. 65977 Exp 6-30-12 CIVIL — STATE OF CALIFORNIA

THE STATE OF CALIFORNIA OR ITS OFFICERS OR AGENTS SHALL NOT BE RESPONSIBLE FOR THE ACCURACY OR COMPLETENESS OF SCANNED COPIES OF THIS PLAN SHEET.

CONSTRUCTION AREA SIGNS

SIGN LETTER	SIGN CODE		PANEL SIZE	SIGN MESSAGE	NUMBER OF SIGNS
	FEDERAL	CALIFORNIA			
(A)	M4-10L	C5 (L†)	48" x 18"	DETOUR (INSIDE ARROW) L†	2
(B)	M4-10R	C5 (R†)	48" x 18"	DETOUR (INSIDE ARROW) R†	2
(C)	M4-8a	C7	24" x 18"	END DETOUR	1

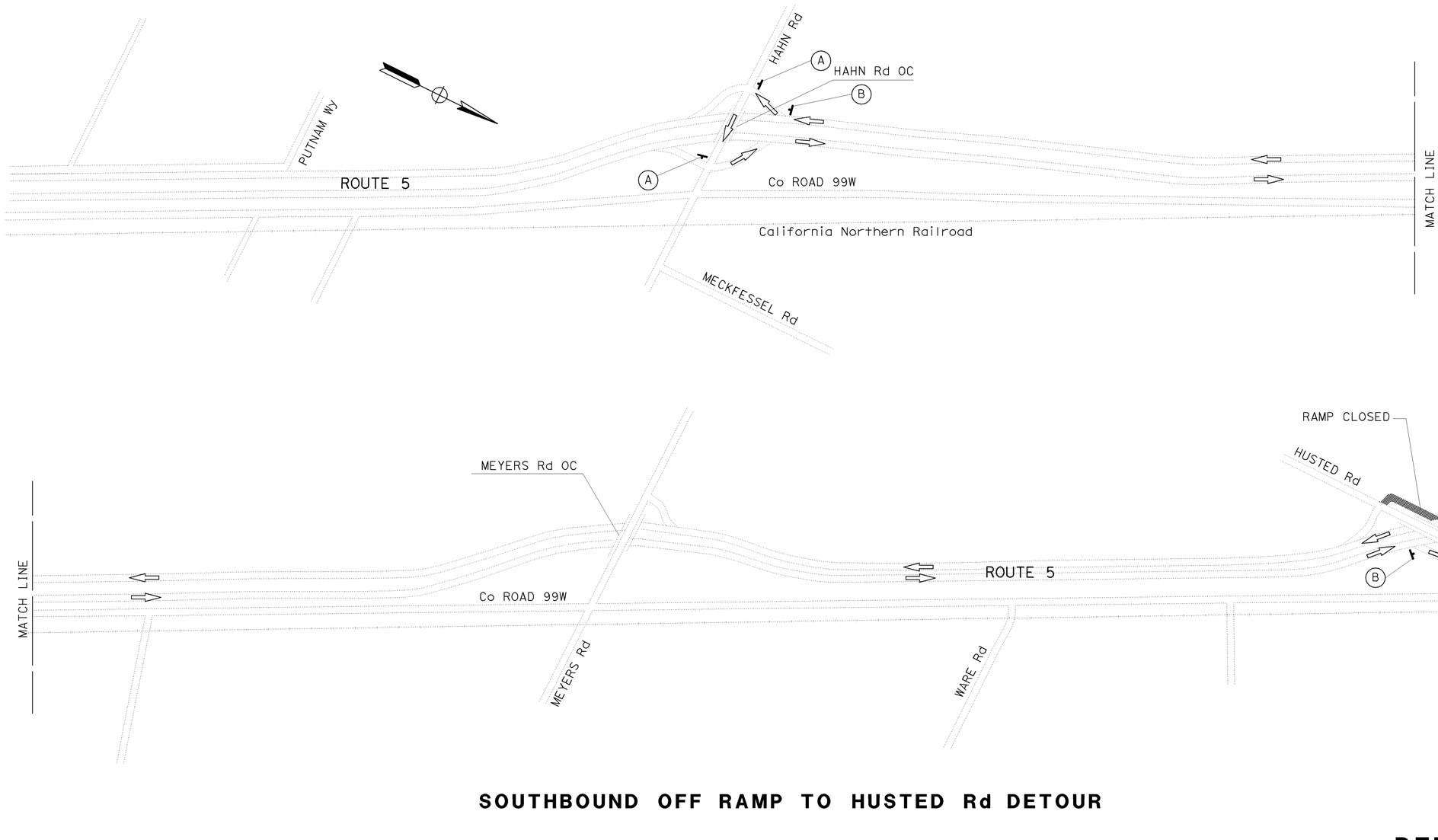

SOUTHBOUND OFF RAMP TO HUSTED Rd DETOUR

THIS PLAN ACCURATE FOR DETOUR CONSTRUCTION WORK ONLY

DETOUR PLAN

NO SCALE

DE-15

STATE OF CALIFORNIA - DEPARTMENT OF TRANSPORTATION
NORTH REGION
OFFICE OF DESIGN SOUTH
DESIGN BRANCH S2

FUNCTIONAL SUPERVISOR: GILBERT OGAZ

CALCULATED-DESIGNED BY: ANA SERRANO
CHECKED BY: ANA SERRANO
REVISED BY
DATE REVISED

LAST REVISION — DATE PLOTTED => 13-SEP-2010 — TIME PLOTTED => 11:26 — 00-00-00

BORDER LAST REVISED 7/1/2010

USERNAME => s128033
DGN FILE => 33c890mg015.dgn

RELATIVE BORDER SCALE IS IN INCHES 0 1 2 3

UNIT 0322

PROJECT NUMBER & PHASE 03000011221

Dist	COUNTY	ROUTE	POST MILES TOTAL PROJECT	SHEET No.	TOTAL SHEETS
03	Yol, Col	5	R21.5/R23.8,R27.0/ R28.9,R0.0/R21.0	29	87

Ana Serrano — REGISTERED CIVIL ENGINEER — 5-4-10 DATE

5-10-10 PLANS APPROVAL DATE

REGISTERED PROFESSIONAL ENGINEER — ANA SERRANO No. 65977 Exp 6-30-12 CIVIL — STATE OF CALIFORNIA

THE STATE OF CALIFORNIA OR ITS OFFICERS OR AGENTS SHALL NOT BE RESPONSIBLE FOR THE ACCURACY OR COMPLETENESS OF SCANNED COPIES OF THIS PLAN SHEET.

NORTHBOUND OFF RAMP TO HUSTED ROAD DETOUR

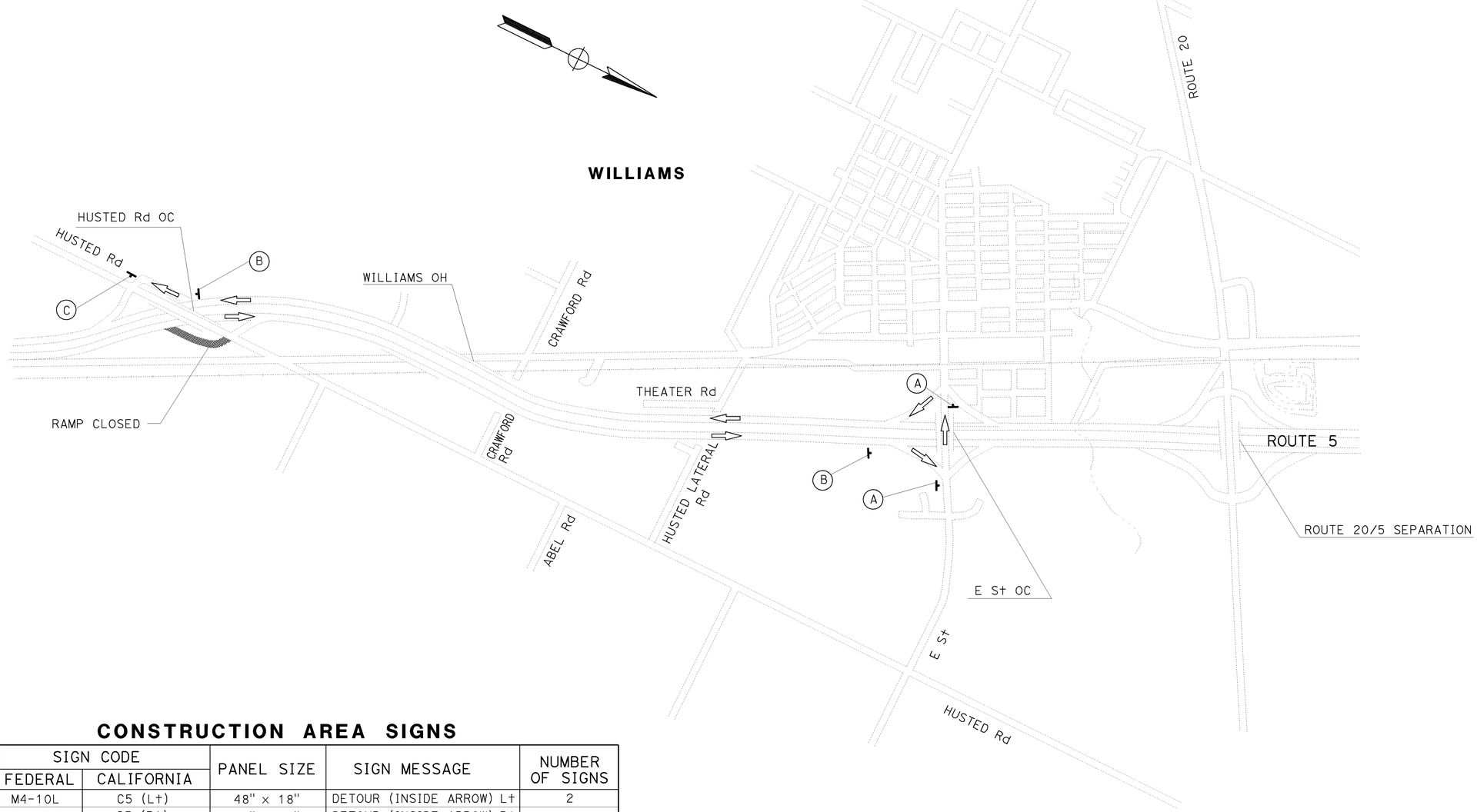

CONSTRUCTION AREA SIGNS

SIGN LETTER	SIGN CODE		PANEL SIZE	SIGN MESSAGE	NUMBER OF SIGNS
	FEDERAL	CALIFORNIA			
(A)	M4-10L	C5 (Lt)	48" x 18"	DETOUR (INSIDE ARROW) Lt	2
(B)	M4-10R	C5 (Rt)	48" x 18"	DETOUR (INSIDE ARROW) Rt	2
(C)	M4-8a	C7	24" x 18"	END DETOUR	1

THIS PLAN ACCURATE FOR DETOUR CONSTRUCTION WORK ONLY

DETOUR PLAN

NO SCALE

DE-16

STATE OF CALIFORNIA - DEPARTMENT OF TRANSPORTATION
Caltrans
NORTH REGION
OFFICE OF DESIGN SOUTH
DESIGN BRANCH S2

FUNCTIONAL SUPERVISOR: GILBERT OGAZ

CALCULATED-DESIGNED BY: ANA SERRANO
CHECKED BY:

REVISED BY | DATE REVISED

LAST REVISION | DATE PLOTTED => 13-SEP-2010
00-00-00 | TIME PLOTTED => 11:26

BORDER LAST REVISED 7/1/2010

USERNAME => s128033
DGN FILE => 33c890mg016.dgn

RELATIVE BORDER SCALE IS IN INCHES 0 1 2 3

UNIT 0322

PROJECT NUMBER & PHASE 03000011221

Dist	COUNTY	ROUTE	POST MILES TOTAL PROJECT	SHEET No.	TOTAL SHEETS
03	Yol, Col	5	R21.5/R23.8,R27.0/ R28.9,R0.0/R21.0	30	87

Ana Serrano — 5-4-10
REGISTERED CIVIL ENGINEER — DATE

5-10-10
PLANS APPROVAL DATE

REGISTERED PROFESSIONAL ENGINEER — ANA SERRANO No. 65977 Exp 6-30-12 CIVIL — STATE OF CALIFORNIA

THE STATE OF CALIFORNIA OR ITS OFFICERS OR AGENTS SHALL NOT BE RESPONSIBLE FOR THE ACCURACY OR COMPLETENESS OF SCANNED COPIES OF THIS PLAN SHEET.

SOUTHBOUND ON RAMP FROM HUSTED ROAD DETOUR

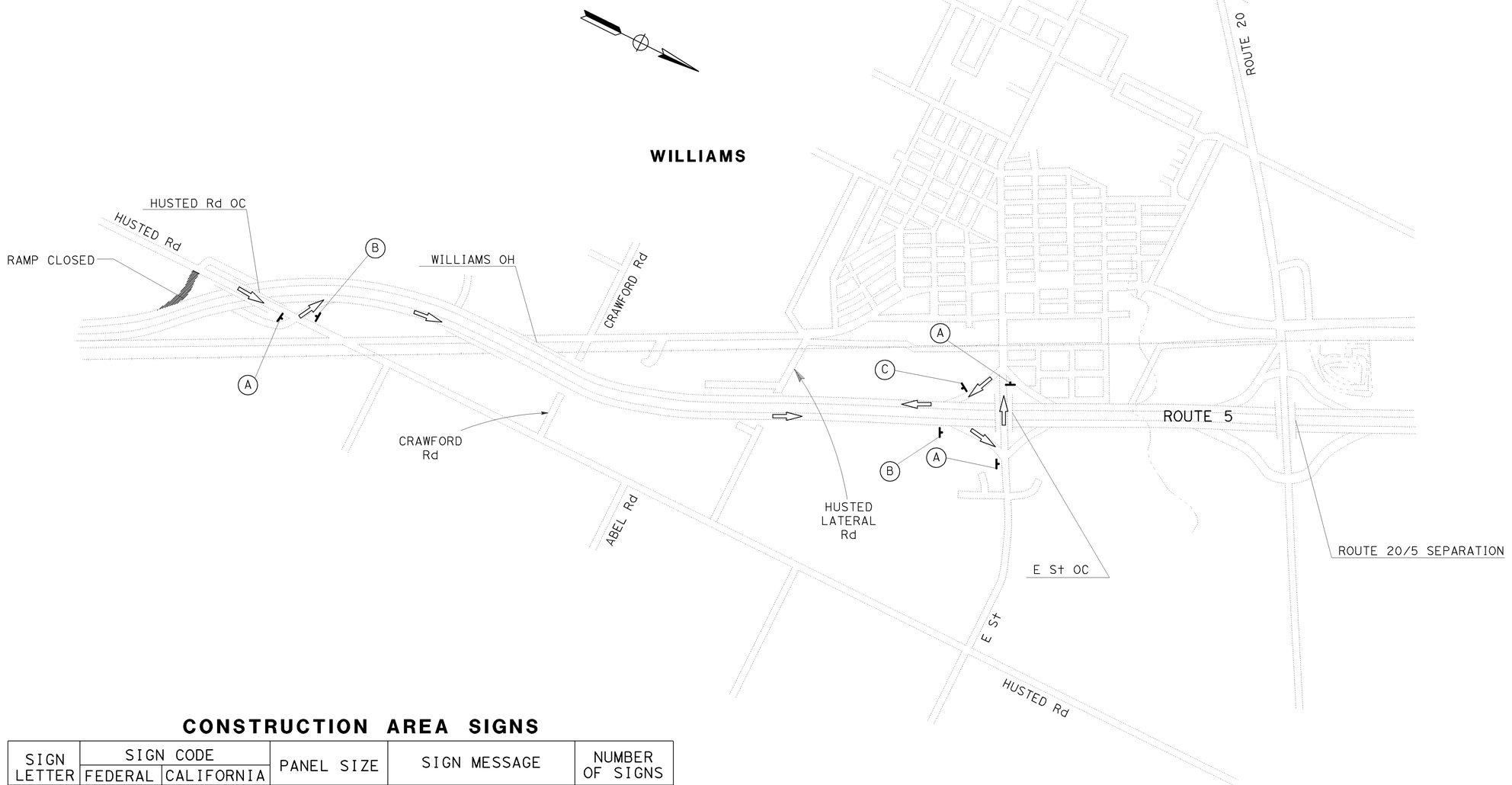

CONSTRUCTION AREA SIGNS

SIGN LETTER	SIGN CODE FEDERAL	SIGN CODE CALIFORNIA	PANEL SIZE	SIGN MESSAGE	NUMBER OF SIGNS
(A)	M4-10L	C5 (L†)	48" x 18"	DETOUR(INSIDE ARROW)L†	3
(B)	M4-10R	C5 (R†)	48" x 18"	DETOUR(INSIDE ARROW)R†	2
(C)	M4-8a	C7	24" x 18"	END DETOUR	1

DETOUR PLAN

NO SCALE

DE-17

THIS PLAN ACCURATE FOR DETOUR CONSTRUCTION WORK ONLY

CALCULATED-DESIGNED BY: ANA SERRANO
CHECKED BY: ANA SERRANO
REVISED BY
DATE REVISED
FUNCTIONAL SUPERVISOR: GILBERT OGAZ

STATE OF CALIFORNIA - DEPARTMENT OF TRANSPORTATION
NORTH REGION
OFFICE OF DESIGN SOUTH
DESIGN BRANCH S2

LAST REVISION — DATE PLOTTED => 13-SEP-2010 — TIME PLOTTED => 11:26 — 00-00-00

BORDER LAST REVISED 7/1/2010 | USERNAME => s128033 | DGN FILE => 33c890mg017.dgn | RELATIVE BORDER SCALE IS IN INCHES 0 1 2 3 | UNIT 0322 | PROJECT NUMBER & PHASE 03000011221

Dist	COUNTY	ROUTE	POST MILES TOTAL PROJECT	SHEET No.	TOTAL SHEETS
03	Yol, Col	5	R21.5/R23.8,R27.0/ R28.9,R0.0/R21.0	31	87

REGISTERED CIVIL ENGINEER 5-4-10 DATE

5-10-10
PLANS APPROVAL DATE

REGISTERED PROFESSIONAL ENGINEER ANA SERRANO No. 65977 Exp. 6-30-12 CIVIL STATE OF CALIFORNIA

THE STATE OF CALIFORNIA OR ITS OFFICERS OR AGENTS SHALL NOT BE RESPONSIBLE FOR THE ACCURACY OR COMPLETENESS OF SCANNED COPIES OF THIS PLAN SHEET.

SOUTHBOUND OFF RAMP TO E St DETOUR

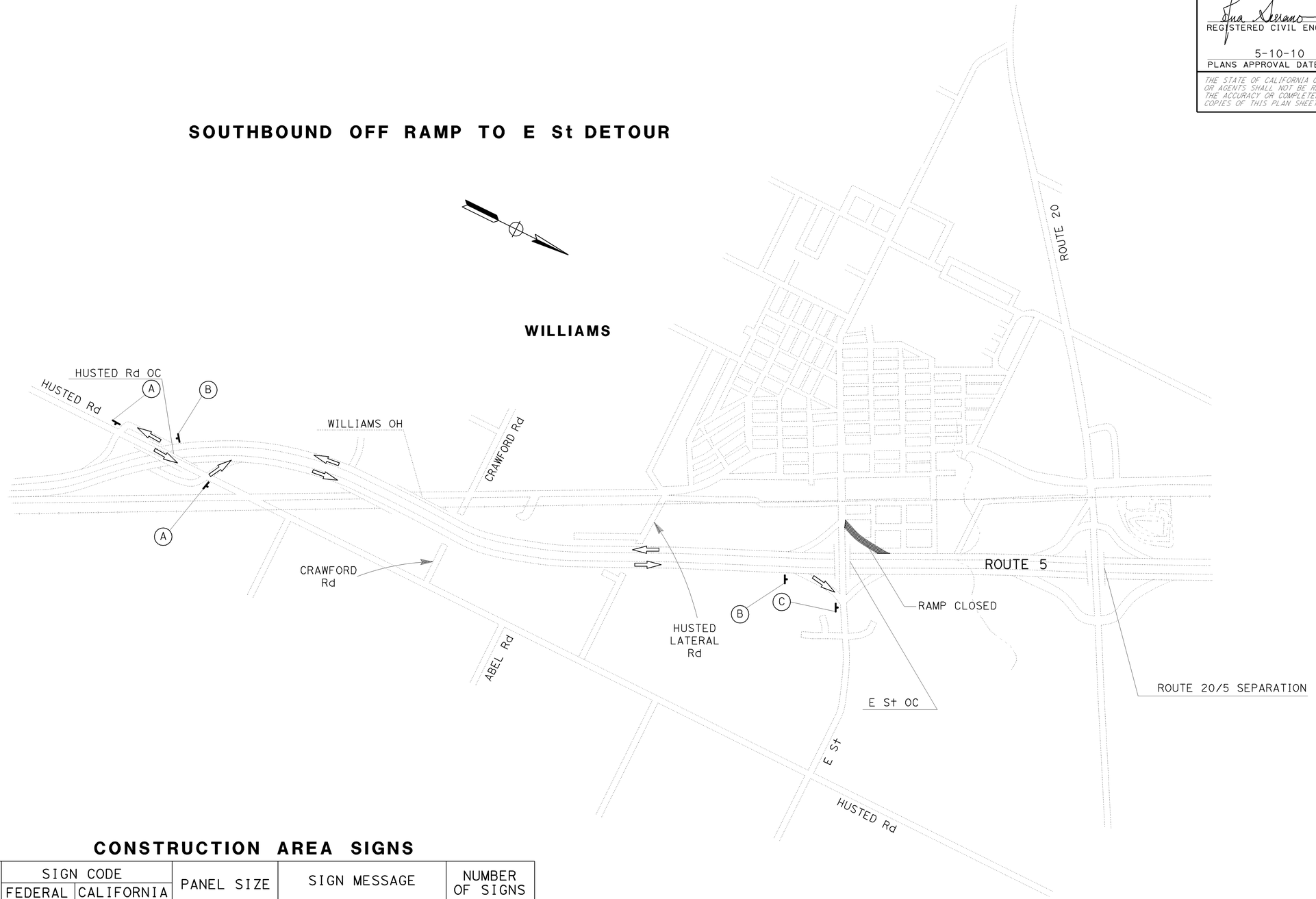

CONSTRUCTION AREA SIGNS

SIGN LETTER	SIGN CODE FEDERAL	SIGN CODE CALIFORNIA	PANEL SIZE	SIGN MESSAGE	NUMBER OF SIGNS
A	M4-10L	C5 (Lt)	48" x 18"	DETOUR(INSIDE ARROW)Lt	2
B	M4-10R	C5 (Rt)	48" x 18"	DETOUR(INSIDE ARROW)Rt	2
C	M4-8a	C7	24" x 18"	END DETOUR	1

DETOUR PLAN

NO SCALE

DE-18

THIS PLAN ACCURATE FOR DETOUR CONSTRUCTION WORK ONLY

STATE OF CALIFORNIA - DEPARTMENT OF TRANSPORTATION
Caltrans
NORTH REGION
OFFICE OF DESIGN SOUTH
DESIGN BRANCH S2

FUNCTIONAL SUPERVISOR: GILBERT OGAZ
CALCULATED-DESIGNED BY: ANA SERRANO
CHECKED BY: ANA SERRANO
REVISED BY
DATE REVISED

LAST REVISION 00-00-00
DATE PLOTTED => 13-SEP-2010
TIME PLOTTED => 11:26

Dist	COUNTY	ROUTE	POST MILES TOTAL PROJECT	SHEET No.	TOTAL SHEETS
03	Yol, Col	5	R21.5/R23.8,R27.0/ R28.9,R0.0/R21.0	32	87

Ana Serrano — REGISTERED CIVIL ENGINEER — 5-4-10 DATE

5-10-10 PLANS APPROVAL DATE

REGISTERED PROFESSIONAL ENGINEER — ANA SERRANO No. 65977 Exp 6-30-12 CIVIL — STATE OF CALIFORNIA

THE STATE OF CALIFORNIA OR ITS OFFICERS OR AGENTS SHALL NOT BE RESPONSIBLE FOR THE ACCURACY OR COMPLETENESS OF SCANNED COPIES OF THIS PLAN SHEET.

NORTHBOUND ON RAMP FROM E St DETOUR

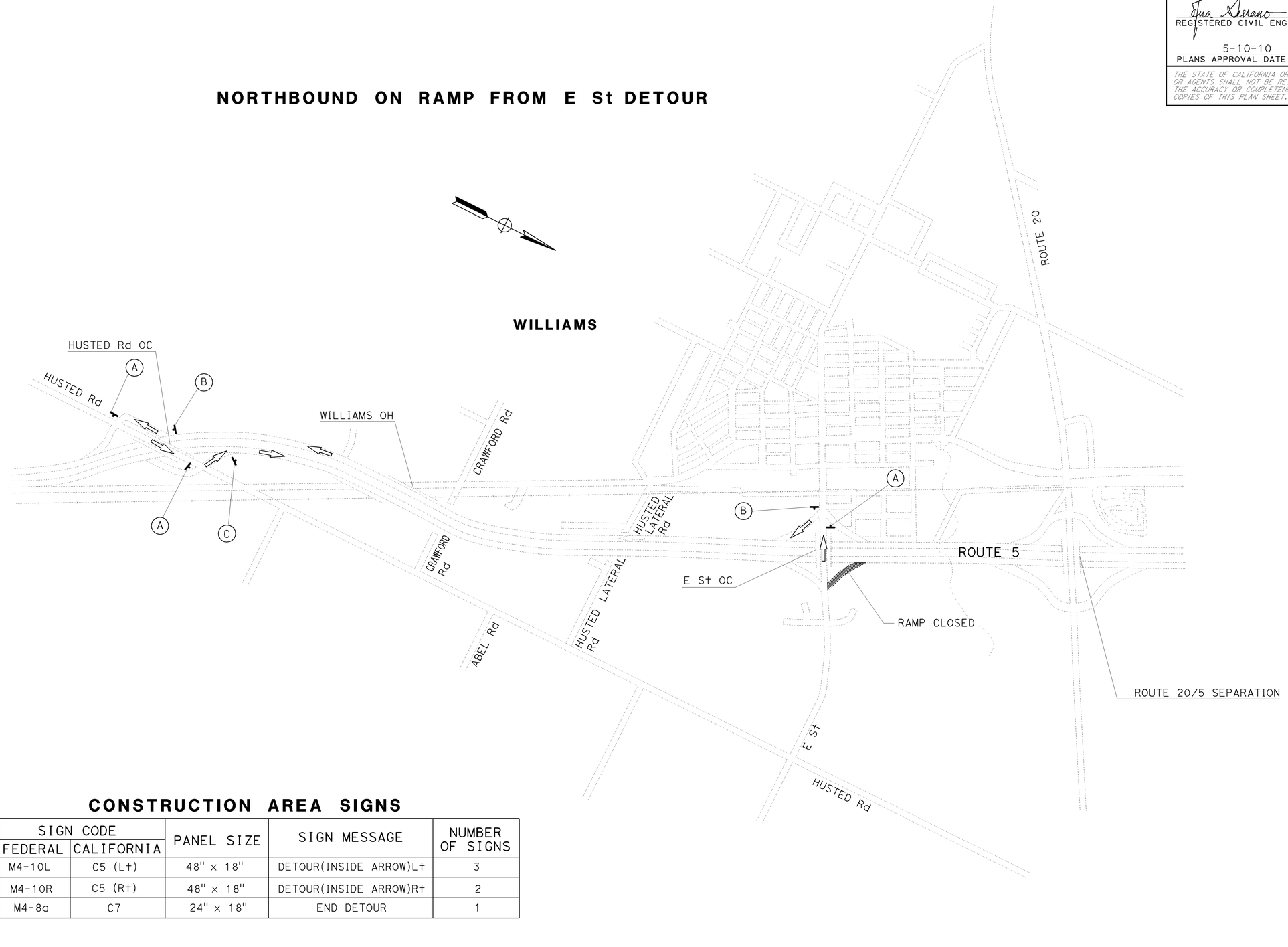

CONSTRUCTION AREA SIGNS

SIGN LETTER	SIGN CODE FEDERAL	SIGN CODE CALIFORNIA	PANEL SIZE	SIGN MESSAGE	NUMBER OF SIGNS
(A)	M4-10L	C5 (L†)	48" x 18"	DETOUR(INSIDE ARROW)L†	3
(B)	M4-10R	C5 (R†)	48" x 18"	DETOUR(INSIDE ARROW)R†	2
(C)	M4-8a	C7	24" x 18"	END DETOUR	1

THIS PLAN ACCURATE FOR DETOUR CONSTRUCTION WORK ONLY

DETOUR PLAN

NO SCALE

DE-19

STATE OF CALIFORNIA - DEPARTMENT OF TRANSPORTATION
Caltrans
NORTH REGION
OFFICE OF DESIGN SOUTH
DESIGN BRANCH S2

FUNCTIONAL SUPERVISOR: GILBERT OGAZ

CALCULATED-DESIGNED BY: ANA SERRANO
CHECKED BY:

REVISED BY | DATE REVISED

LAST REVISION | DATE PLOTTED => 13-SEP-2010 | TIME PLOTTED => 11:26 | 00-00-00

BORDER LAST REVISED 7/1/2010

USERNAME => s128033
DGN FILE => 33c890mg019.dgn

RELATIVE BORDER SCALE IS IN INCHES 0 1 2 3

UNIT 0322

PROJECT NUMBER & PHASE 03000011221

Dist	COUNTY	ROUTE	POST MILES TOTAL PROJECT	SHEET No.	TOTAL SHEETS
03	Yol, Col	5	R21.5/R23.8,R27.0/ R28.9,R0.0/R21.0	33	87

Ana Serrano — REGISTERED CIVIL ENGINEER — 5-4-10 DATE

5-10-10 PLANS APPROVAL DATE

REGISTERED PROFESSIONAL ENGINEER — ANA SERRANO No. 65977 Exp 6-30-12 CIVIL — STATE OF CALIFORNIA

THE STATE OF CALIFORNIA OR ITS OFFICERS OR AGENTS SHALL NOT BE RESPONSIBLE FOR THE ACCURACY OR COMPLETENESS OF SCANNED COPIES OF THIS PLAN SHEET.

SOUTHBOUND ON RAMP FROM E St DETOUR

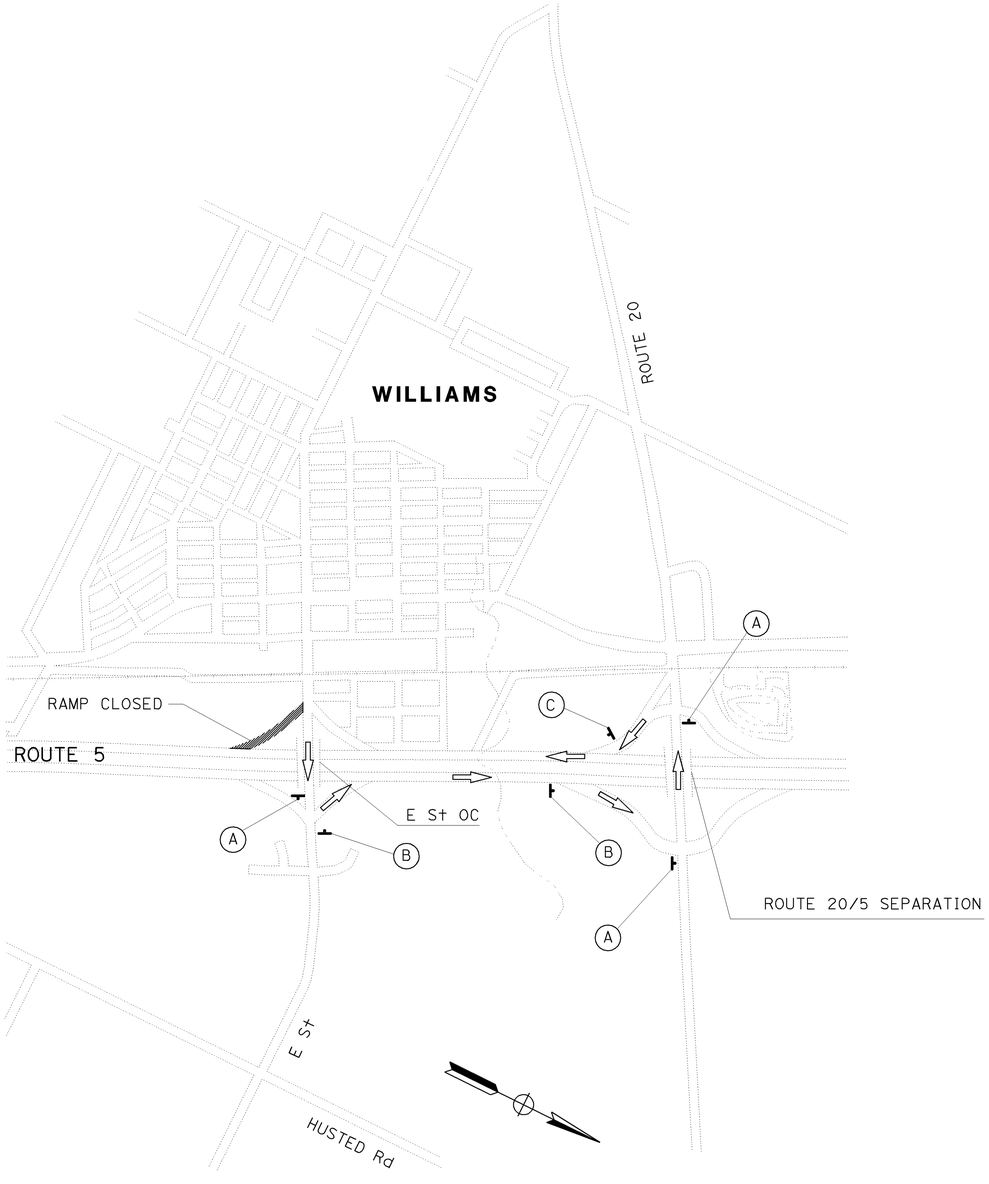

NORTHBOUND OFF RAMP TO E St DETOUR

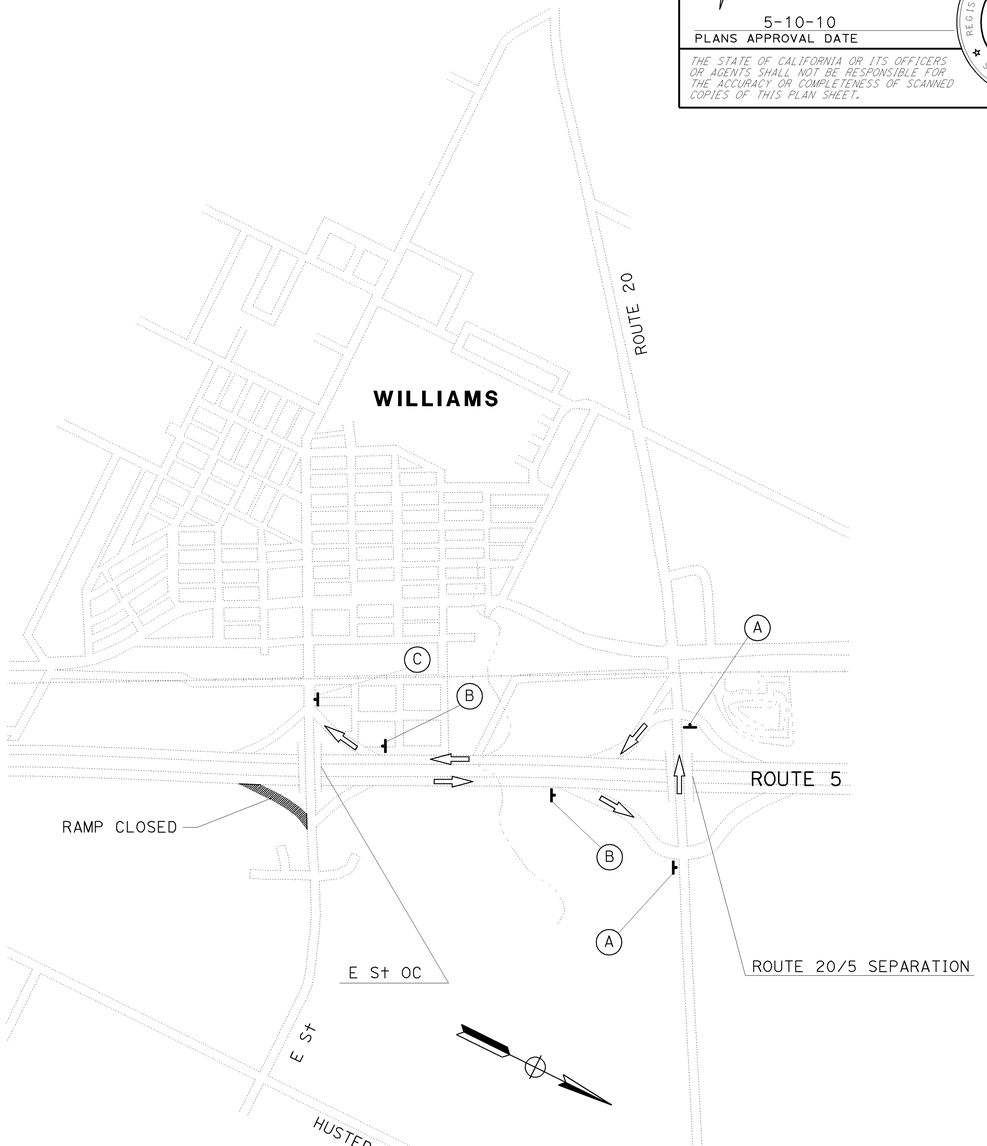

CONSTRUCTION AREA SIGNS

SIGN LETTER	SIGN CODE FEDERAL	SIGN CODE CALIFORNIA	PANEL SIZE	SIGN MESSAGE	NUMBER OF SIGNS
(A)	M4-10L	C5 (L†)	48" x 18"	DETOUR(INSIDE ARROW)L†	5
(B)	M4-10R	C5 (R†)	48" x 18"	DETOUR(INSIDE ARROW)R†	4
(C)	M4-8a	C7	24" x 18"	END DETOUR	2

THIS PLAN ACCURATE FOR DETOUR CONSTRUCTION WORK ONLY

DETOUR PLAN

NO SCALE

DE-20

STATE OF CALIFORNIA - DEPARTMENT OF TRANSPORTATION
Caltrans®
NORTH REGION
OFFICE OF DESIGN SOUTH
DESIGN BRANCH S2

FUNCTIONAL SUPERVISOR: GILBERT OGAZ

CALCULATED-DESIGNED BY: ANA SERRANO
CHECKED BY: ANA SERRANO

REVISED BY
DATE REVISED

LAST REVISION | DATE PLOTTED => 13-SEP-2010 | 00-00-00 | TIME PLOTTED => 11:26

Dist	COUNTY	ROUTE	POST MILES TOTAL PROJECT	SHEET No.	TOTAL SHEETS
03	Yol, Col	5	R21.5/R23.8,R27.0/ R28.9,R0.0/R21.0	34	87

Ana Serrano — 5-4-10
REGISTERED CIVIL ENGINEER — DATE

5-10-10
PLANS APPROVAL DATE

REGISTERED PROFESSIONAL ENGINEER
ANA SERRANO
No. 65977
Exp 6-30-12
CIVIL
STATE OF CALIFORNIA

THE STATE OF CALIFORNIA OR ITS OFFICERS OR AGENTS SHALL NOT BE RESPONSIBLE FOR THE ACCURACY OR COMPLETENESS OF SCANNED COPIES OF THIS PLAN SHEET.

NORTHBOUND ON RAMP FROM Rte 20 DETOUR

SOUTHBOUND OFF RAMP TO Rte 20 DETOUR

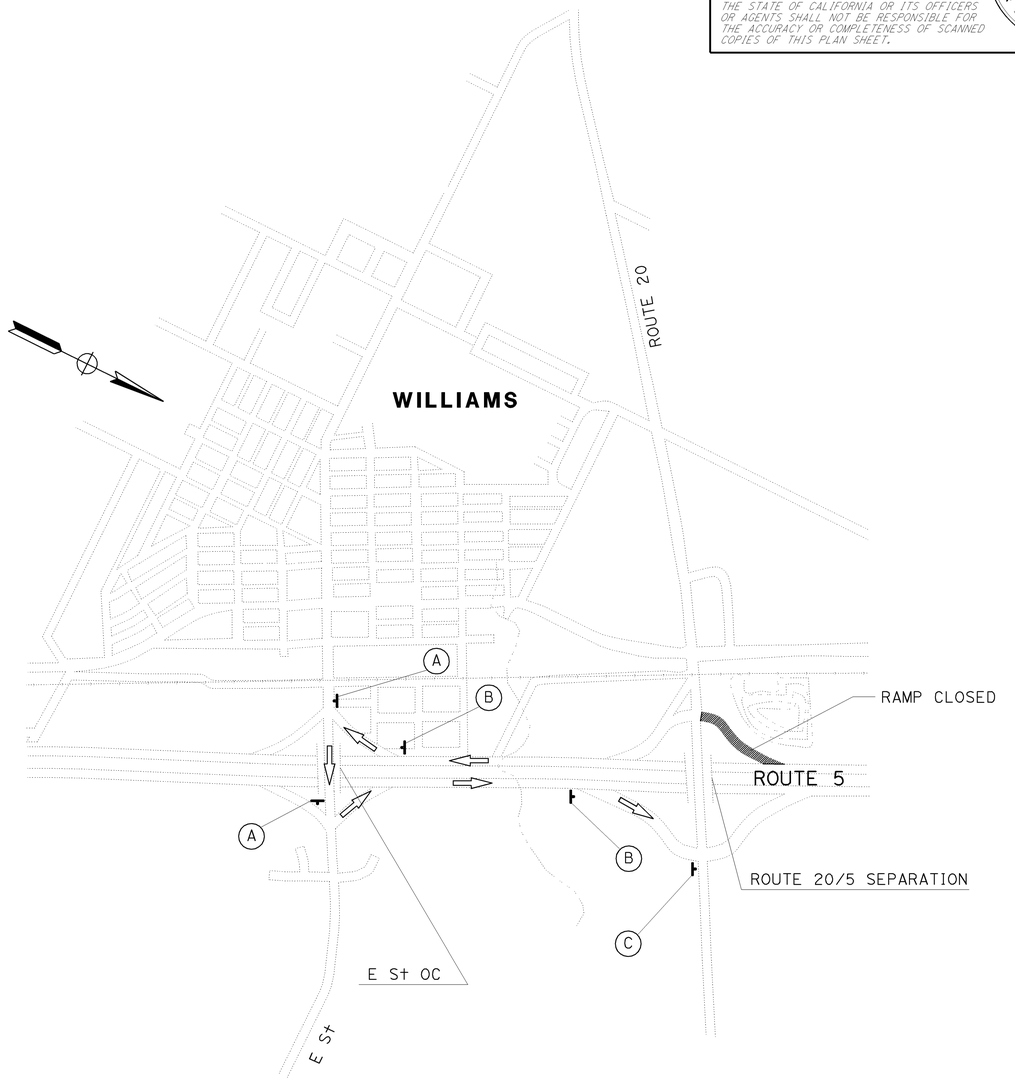

CONSTRUCTION AREA SIGNS

SIGN LETTER	SIGN CODE FEDERAL	SIGN CODE CALIFORNIA	PANEL SIZE	SIGN MESSAGE	NUMBER OF SIGNS
A	M4-10L	C5 (L†)	48" x 18"	DETOUR(INSIDE ARROW)L†	5
B	M4-10R	C5 (R†)	48" x 18"	DETOUR(INSIDE ARROW)R†	4
C	M4-8a	C7	24" x 18"	END DETOUR	2

THIS PLAN ACCURATE FOR DETOUR CONSTRUCTION WORK ONLY

DETOUR PLAN

NO SCALE

DE-21

STATE OF CALIFORNIA - DEPARTMENT OF TRANSPORTATION
NORTH REGION
OFFICE OF DESIGN SOUTH
DESIGN BRANCH S2
Caltrans

FUNCTIONAL SUPERVISOR: GILBERT OGAZ

CALCULATED-DESIGNED BY: ANA SERRANO
CHECKED BY: ANA SERRANO

REVISED BY | DATE REVISED

LAST REVISION | DATE PLOTTED => 13-SEP-2010 | TIME PLOTTED => 11:26 | 00-00-00

BORDER LAST REVISED 7/1/2010

USERNAME => s128033
DGN FILE => 33c890mg021.dgn

RELATIVE BORDER SCALE IS IN INCHES 0 1 2 3

UNIT 0322

PROJECT NUMBER & PHASE 03000011221

Dist	COUNTY	ROUTE	POST MILES TOTAL PROJECT	SHEET No.	TOTAL SHEETS
03	Yol, Col	5	R21.5/R23.8,R27.0/ R28.9,R0.0/R21.0	35	87

Ana Serrano
REGISTERED CIVIL ENGINEER — 5-4-10 DATE

5-10-10
PLANS APPROVAL DATE

ANA SERRANO No. 65977 Exp 6-30-12 CIVIL — REGISTERED PROFESSIONAL ENGINEER — STATE OF CALIFORNIA

THE STATE OF CALIFORNIA OR ITS OFFICERS OR AGENTS SHALL NOT BE RESPONSIBLE FOR THE ACCURACY OR COMPLETENESS OF SCANNED COPIES OF THIS PLAN SHEET.

SOUTHBOUND ON RAMP FROM Rte 20 DETOUR

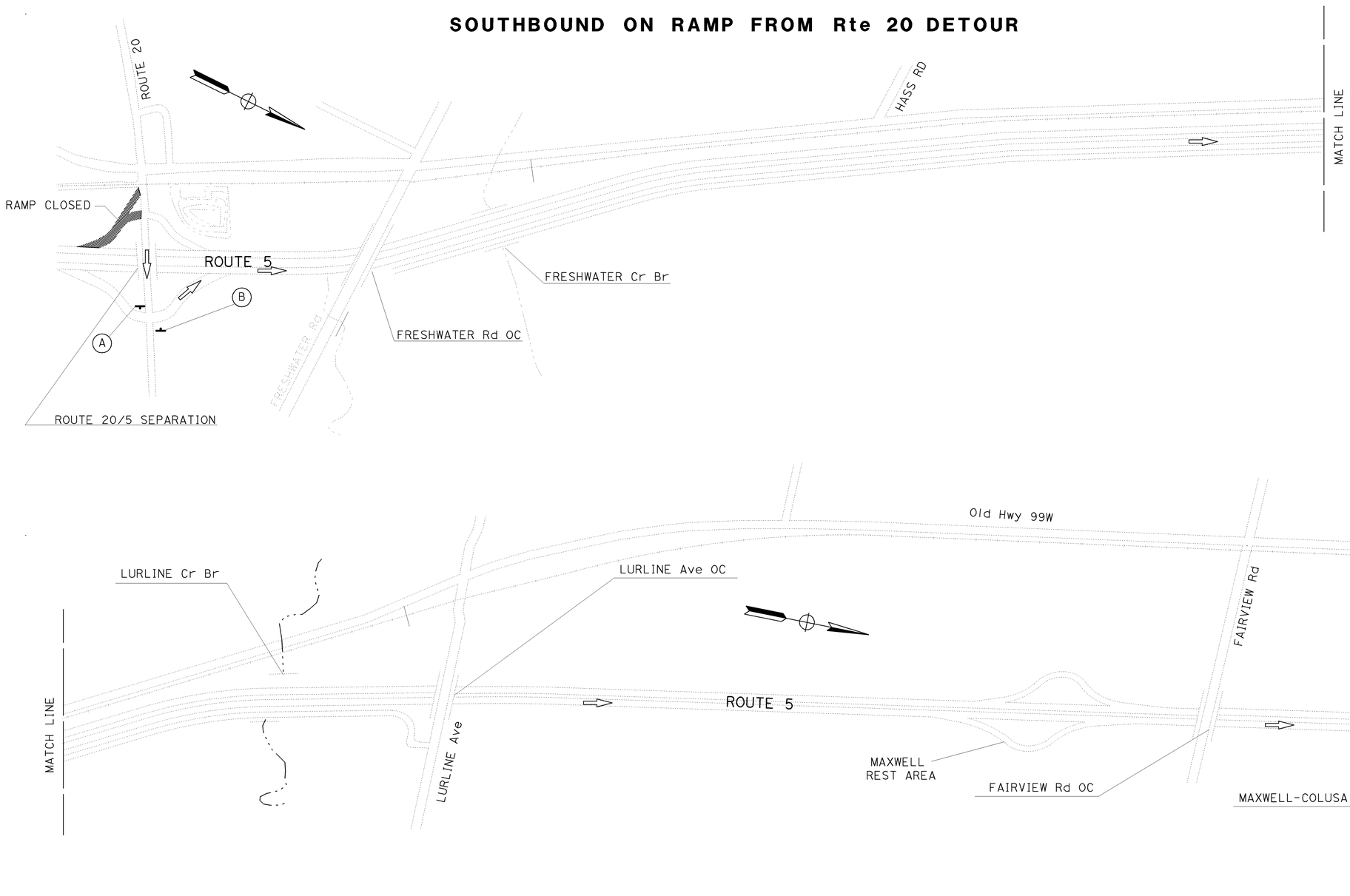

CONSTRUCTION AREA SIGNS

SIGN LETTER	SIGN CODE FEDERAL	SIGN CODE CALIFORNIA	PANEL SIZE	SIGN MESSAGE	NUMBER OF SIGNS
(A)	M4-10L	C5 (L†)	48" x 18"	DETOUR(INSIDE ARROW)L†	3
(B)	M4-10R	C5 (R†)	48" x 18"	DETOUR(INSIDE ARROW)R†	2
(C)	M4-8a	C7	24" x 18"	END DETOUR	1

DETOUR PLAN

NO SCALE

DE-22

THIS PLAN ACCURATE FOR DETOUR CONSTRUCTION WORK ONLY

REVISED BY: ANA SERRANO
DATE REVISED:
CALCULATED-DESIGNED BY: ANA SERRANO
CHECKED BY:
FUNCTIONAL SUPERVISOR: GILBERT OGAZ

STATE OF CALIFORNIA - DEPARTMENT OF TRANSPORTATION
NORTH REGION
OFFICE OF DESIGN SOUTH
DESIGN BRANCH S2

LAST REVISION — DATE PLOTTED => 13-SEP-2010 — TIME PLOTTED => 11:26 — 00-00-00

NORTHBOUND OFF RAMP TO Rte 20 DETOUR

Dist	COUNTY	ROUTE	POST MILES TOTAL PROJECT	SHEET No.	TOTAL SHEETS
03	Yol, Col	5	R21.5/R23.8,R27.0/ R28.9,R0.0/R21.0	36	87

Ana Serrano — 5-4-10
REGISTERED CIVIL ENGINEER — DATE

5-10-10
PLANS APPROVAL DATE

REGISTERED PROFESSIONAL ENGINEER — ANA SERRANO No. 65977 Exp 6-30-12 CIVIL — STATE OF CALIFORNIA

THE STATE OF CALIFORNIA OR ITS OFFICERS OR AGENTS SHALL NOT BE RESPONSIBLE FOR THE ACCURACY OR COMPLETENESS OF SCANNED COPIES OF THIS PLAN SHEET.

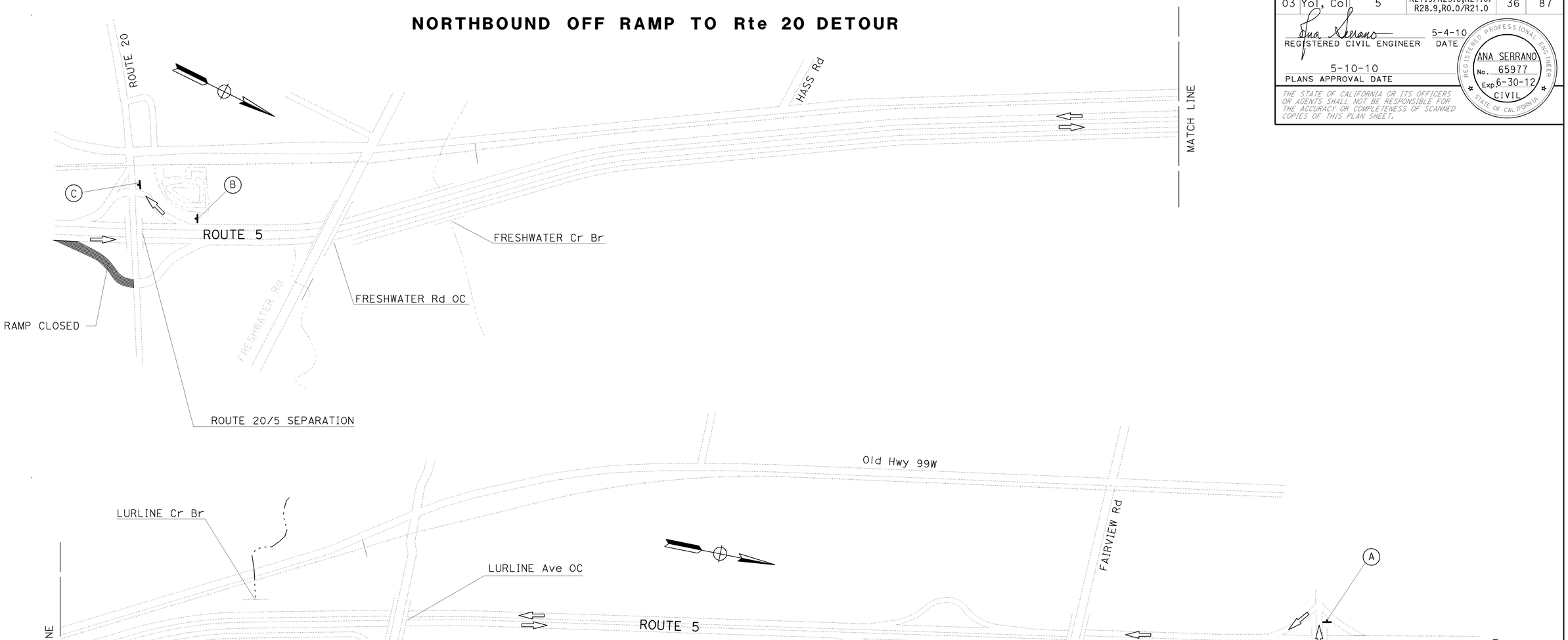

CONSTRUCTION AREA SIGNS

SIGN LETTER	SIGN CODE FEDERAL	SIGN CODE CALIFORNIA	PANEL SIZE	SIGN MESSAGE	NUMBER OF SIGNS
(A)	M4-10L	C5 (L†)	48" x 18"	DETOUR(INSIDE ARROW)L†	2
(B)	M4-10R	C5 (R†)	48" x 18"	DETOUR(INSIDE ARROW)R†	2
(C)	M4-8a	C7	24" x 18"	END DETOUR	1

THIS PLAN ACCURATE FOR DETOUR CONSTRUCTION WORK ONLY

DETOUR PLAN
NO SCALE

DE-23

STATE OF CALIFORNIA - DEPARTMENT OF TRANSPORTATION
NORTH REGION
OFFICE OF DESIGN SOUTH
DESIGN BRANCH S2

Caltrans®

FUNCTIONAL SUPERVISOR: GILBERT OGAZ

CALCULATED-DESIGNED BY: ANA SERRANO
CHECKED BY: ANA SERRANO

REVISED BY | DATE REVISED

LAST REVISION: DATE PLOTTED => 13-SEP-2010 | TIME PLOTTED => 11:26 | 00-00-00

BORDER LAST REVISED 7/1/2010

USERNAME => s128033
DGN FILE => 33c890mg023.dgn

RELATIVE BORDER SCALE IS IN INCHES 0 1 2 3

UNIT 0322

PROJECT NUMBER & PHASE 03000011221

Dist	COUNTY	ROUTE	POST MILES TOTAL PROJECT	SHEET No.	TOTAL SHEETS
03	Yol,Col	5	R21.5/R23.8,R27.0/R28.9 R0.0/R21.0	37	87

Joyce K Loftus 5-10-10
REGISTERED CIVIL ENGINEER DATE

5-10-10
PLANS APPROVAL DATE

Joyce K. Loftus No. 38426 Exp. 3-31-11 CIVIL — REGISTERED PROFESSIONAL ENGINEER — STATE OF CALIFORNIA

THE STATE OF CALIFORNIA OR ITS OFFICERS OR AGENTS SHALL NOT BE RESPONSIBLE FOR THE ACCURACY OR COMPLETENESS OF ELECTRONIC COPIES OF THIS PLAN SHEET.

4" THERMOPLASTIC TRAFFIC STRIPE (BROKEN 17-7)

DETAIL NUMBER	LINEAR FEET
9	2,580
TOTAL	2,580

4" THERMOPLASTIC TRAFFIC STRIPE

DETAIL NUMBER	LINEAR FEET
25	254,771
25A	26,670
27B	284,362
TOTAL	565,803

8" THERMOPLASTIC TRAFFIC STRIPE

DETAIL NUMBER	LINEAR FEET
36	7,180
36A	3,311
38	372
38B	600
TOTAL	11,463

8" THERMOPLASTIC TRAFFIC STRIPE (BROKEN 12-3)

DETAIL NUMBER	LINEAR FEET
37	2,402
TOTAL	2,402

4" THERMOPLASTIC TRAFFIC STRIPE (BROKEN 36-12)

DETAIL NUMBER	LINEAR FEET
12	248,966
14A	5,760
TOTAL	254,726

THERMOPLASTIC PAVEMENT MARKING

DESCRIPTION	NUMBER	SQUARE FEET
"STOP"	41 @ 22 SQFT	902
"AHEAD"	14 @ 31 SQFT	434
TYPE I(24) ARROW	13 @ 31 SQFT	403
TYPE V ARROW	28 @ 33 SQFT	924
LIMIT LINE	12	676
CROSSWALK	1	64
TOTAL		3,403

PAVEMENT MARKER (RETROREFLECTIVE)

DETAIL NUMBER	TYPE C (EACH)	TYPE G (EACH)	TYPE H (EACH)
9		55	
12		5,148	
14A	160		
25			5,309
25A			1,112
36		301	
36A		140	
37	16	146	
38		18	
38B		52	
SUBTOTAL	176	5,860	6,421
TOTAL	12,457		

DELINEATOR - OBJECT MARKER

	DELINEATOR (CLASS 1)					OBJECT MARKER (TYPE L-1) (EACH)
	TYPE C (EACH)	TYPE F (EACH)	TYPE G (EACH)	TYPE H (EACH)	TYPE P (EACH)	
	8	211	223	8	8	36
TOTAL	458					36

NOTE: EXACT LOCATIONS FOR DELINEATORS AND OBJECT MARKERS TO BE DETERMINED BY THE ENGINEER.

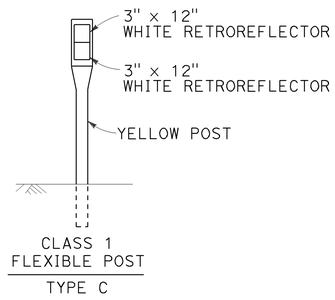

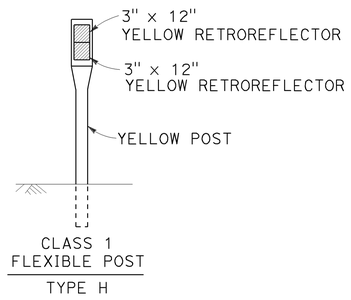

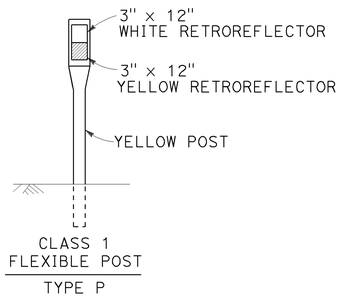

MEDIAN CROSSOVER DELINEATOR DETAILS

NO SCALE

PAVEMENT DELINEATION QUANTITIES

PDQ-1

REVISED BY | DATE REVISED

CALCULATED-DESIGNED BY | CHECKED BY

FUNCTIONAL SUPERVISOR: JOSEPH W. HORTON

STATE OF CALIFORNIA - DEPARTMENT OF TRANSPORTATION

Caltrans®

TRAFFIC

P:\proj3\03\3c890\drafting\33c890nc001.dgn

LAST REVISION DATE PLOTTED => 13-SEP-2010
04-30-10 TIME PLOTTED => 11:26

BORDER LAST REVISED 7/1/2010 | USERNAME => s128033 | DGN FILE => 33c890nc001.dgn | RELATIVE BORDER SCALE IS IN INCHES 0 1 2 3 | UNIT 0389 | PROJECT NUMBER & PHASE 0300011221

Dist	COUNTY	ROUTE	POST MILES TOTAL PROJECT	SHEET No.	TOTAL SHEETS
03	Yol,Col	5	R21.5/R23.8,R27.0/R28.9 R0.0/R21.0	38	87

Joyce K. Loftus 5-10-10
REGISTERED CIVIL ENGINEER DATE

5-10-10
PLANS APPROVAL DATE

REGISTERED PROFESSIONAL ENGINEER
Joyce K. Loftus
No. 38426
Exp. 3-31-11
CIVIL
STATE OF CALIFORNIA

THE STATE OF CALIFORNIA OR ITS OFFICERS OR AGENTS SHALL NOT BE RESPONSIBLE FOR THE ACCURACY OR COMPLETENESS OF ELECTRONIC COPIES OF THIS PLAN SHEET.

TEMPORARY TRAFFIC STRIPE (PAINT)

DETAIL NUMBER	LINEAR FEET
9	2,580
12	248,966
14A	5,760
25	254,771
25A	26,670
27B	284,362
36	7,180
36A	3,311
37	2,402
38	372
38B	600
TOTAL	836,974

TEMPORARY PAVEMENT MARKING (PAINT)

DESCRIPTION	NUMBER	SQUARE FEET
"STOP"	41 @ 22 SQFT	902
"AHEAD"	14 @ 31 SQFT	434
TYPE I(24) ARROW	13 @ 31 SQFT	403
TYPE V ARROW	28 @ 33 SQFT	924
LIMIT LINE	12	676
CROSSWALK	1	64
TOTAL		3,403

TEMPORARY PAVEMENT MARKER

DETAIL NUMBER	TYPE C (EACH)	TYPE G (EACH)	TYPE H (EACH)
9		55	
12		5,148	
14A	160		
25			5,309
25A			1,112
36		301	
36A		140	
37	16	146	
38		18	
38B		52	
SUBTOTAL	176	5,860	6,421
TOTAL	12,457		

NOTE: QUANTITIES SHOWN ARE FOR WINTER SUSPENSION ONLY.

PAVEMENT DELINEATION QUANTITIES
(WINTER SUSPENSION)

PDQ-2

REVISED BY | DATE REVISED
CALCULATED-DESIGNED BY | CHECKED BY
FUNCTIONAL SUPERVISOR: JOSEPH W. HORTON
STATE OF CALIFORNIA - DEPARTMENT OF TRANSPORTATION
Caltrans®
TRAFFIC

LAST REVISION 05-10-10
DATE PLOTTED => 13-SEP-2010
TIME PLOTTED => 11:26

P:\proj3\03\3c890\drafting\33c890nc002.dgn

BORDER LAST REVISED 7/1/2010
USERNAME => s128033
DGN FILE => 33c890nc002.dgn
RELATIVE BORDER SCALE IS IN INCHES 0 1 2 3
UNIT 0389
PROJECT NUMBER & PHASE 0300011221

Dist	COUNTY	ROUTE	POST MILES TOTAL PROJECT	SHEET No.	TOTAL SHEETS
03	Yol,Col	5	R21.5/R23.8,R27.0/R28.9 R0.0/R21.0	39	87

Joyce K Loftus — REGISTERED CIVIL ENGINEER — 5-10-10 DATE

5-10-10
PLANS APPROVAL DATE

Joyce K. Loftus No. 38426 Exp. 3-31-11 CIVIL — REGISTERED PROFESSIONAL ENGINEER — STATE OF CALIFORNIA

THE STATE OF CALIFORNIA OR ITS OFFICERS OR AGENTS SHALL NOT BE RESPONSIBLE FOR THE ACCURACY OR COMPLETENESS OF ELECTRONIC COPIES OF THIS PLAN SHEET.

LEGEND

Sht-No.	ROADSIDE SIGN NUMBER
No.	OVERHEAD SIGN NUMBER
<CA>	CALIFORNIA SIGN CODE
↕	SIGN - TWO POST
■	REMOVE ROADSIDE SIGN

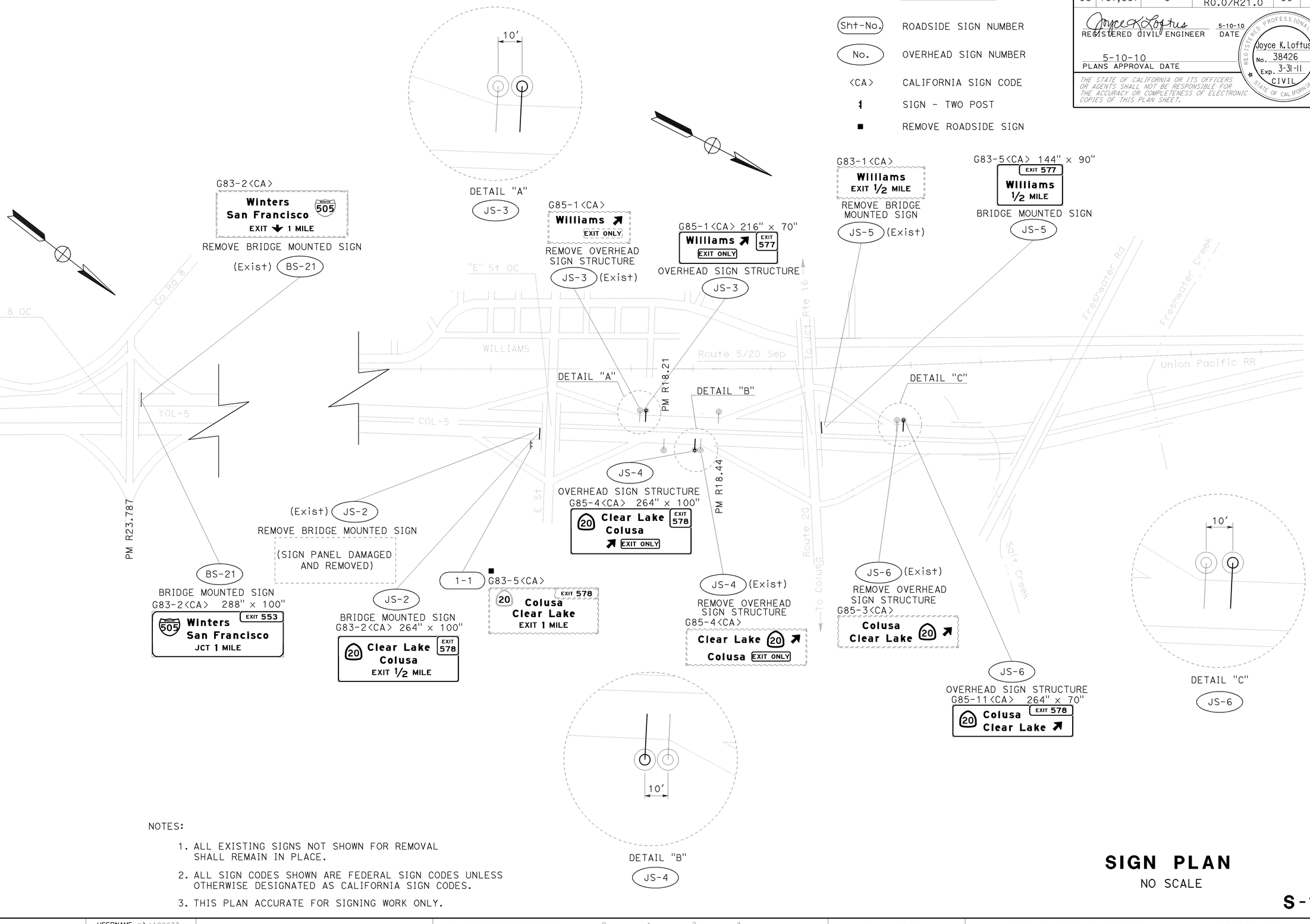

NOTES:

1. ALL EXISTING SIGNS NOT SHOWN FOR REMOVAL SHALL REMAIN IN PLACE.
2. ALL SIGN CODES SHOWN ARE FEDERAL SIGN CODES UNLESS OTHERWISE DESIGNATED AS CALIFORNIA SIGN CODES.
3. THIS PLAN ACCURATE FOR SIGNING WORK ONLY.

SIGN PLAN

NO SCALE

S-1

REVISED BY | DATE REVISED
CALCULATED-DESIGNED BY | CHECKED BY
FUNCTIONAL SUPERVISOR: JOSEPH W. HORTON
STATE OF CALIFORNIA - DEPARTMENT OF TRANSPORTATION
TRAFFIC
Caltrans

P:\proj3\03\3c890\drafting\33c890oa001.dgn

LAST REVISION | DATE PLOTTED => 13-SEP-2010 | TIME PLOTTED => 11:26
04-30-10

BORDER LAST REVISED 7/1/2010 | USERNAME => s128033 | DGN FILE => 33c890oa001.dgn | RELATIVE BORDER SCALE IS IN INCHES 0 1 2 3 | UNIT 0389 | PROJECT NUMBER & PHASE 0300011221

Dist	COUNTY	ROUTE	POST MILES TOTAL PROJECT	SHEET No.	TOTAL SHEETS
03	Yol,Col	5	R21.5/R23.8,R27.0/R28.9 R0.0/R21.0	40	87

Joyce K Loftus 5-10-10
REGISTERED CIVIL ENGINEER DATE

5-10-10
PLANS APPROVAL DATE

REGISTERED PROFESSIONAL ENGINEER
Joyce K. Loftus
No. 38426
Exp. 3-31-11
CIVIL
STATE OF CALIFORNIA

THE STATE OF CALIFORNIA OR ITS OFFICERS OR AGENTS SHALL NOT BE RESPONSIBLE FOR THE ACCURACY OR COMPLETENESS OF ELECTRONIC COPIES OF THIS PLAN SHEET.

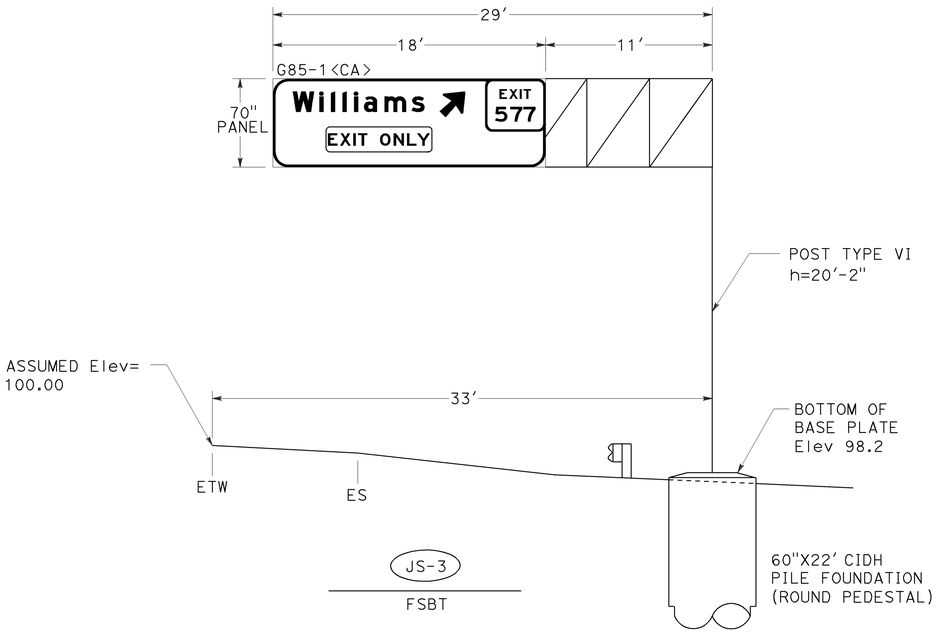

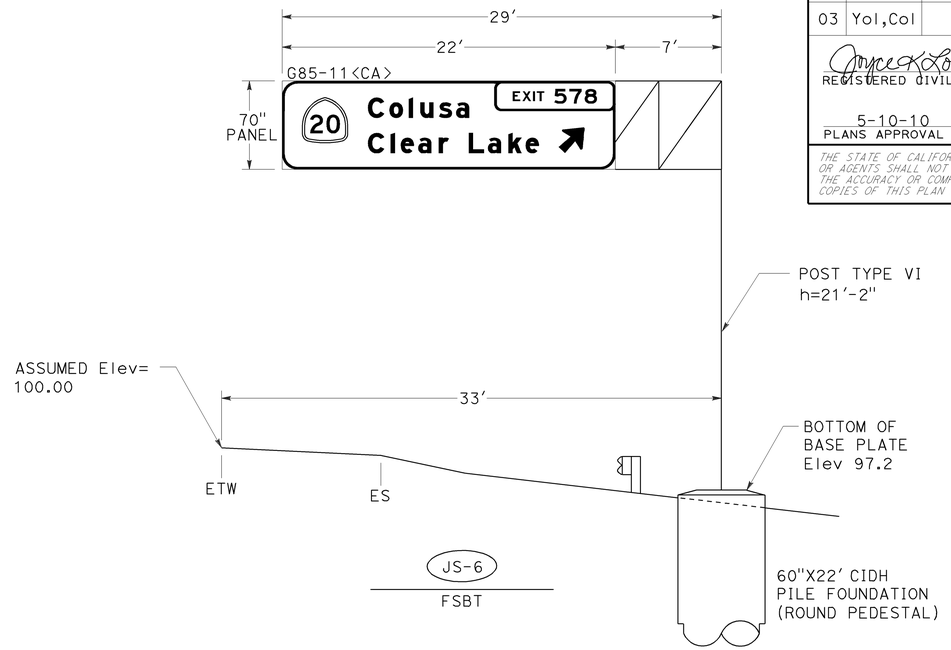

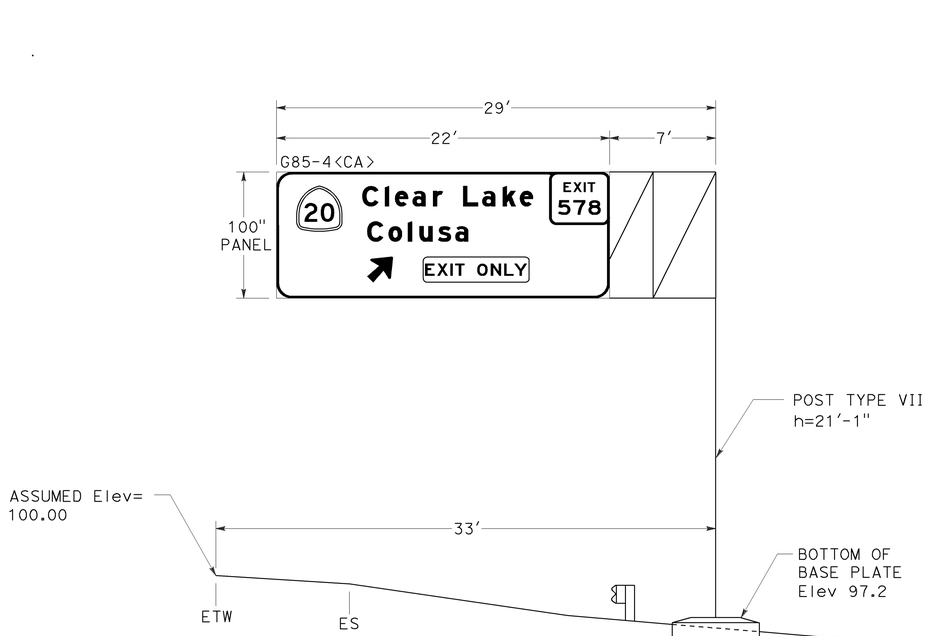

NOTES:
1. LL = LANELINE
2. h = DISTANCE FROM BOTTOM OF FRAME TO BOTTOM OF BASE PLATE.
3. OVERHEAD SIGN PANELS SHALL BE LAMINATED PANELS TYPE A.

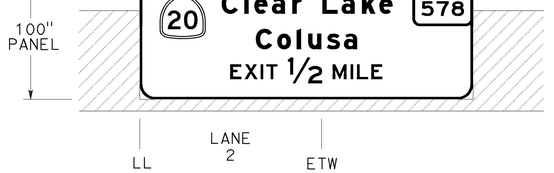

JS-2

BRIDGE MOUNTED SIGN (FNBT)

E STREET OC
Br No. 15-0067
(SEE STRUCTURE PLANS FOR MOUNTING DETAILS)

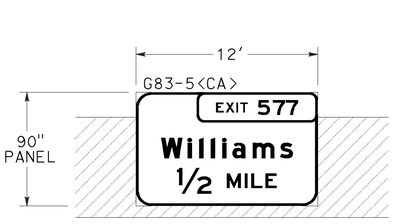

JS-5

BRIDGE MOUNTED SIGN (FSBT)

ROUTE 5/20 Sep
Br No. 15-0078
(SEE STRUCTURE PLANS FOR MOUNTING DETAILS)

BS-21

BRIDGE MOUNTED SIGN (FSBT)

COUNTY ROAD 8 OC
Br No. 22-0030
(SEE STRUCTURE PLANS FOR MOUNTING DETAILS)

SIGN DETAILS

NO SCALE

SD-1

STATE OF CALIFORNIA - DEPARTMENT OF TRANSPORTATION
TRAFFIC
Caltrans
FUNCTIONAL SUPERVISOR: JOSEPH W. HORTON
CALCULATED-DESIGNED BY: JACK KEMMERLY
CHECKED BY: JOYCE LOFTUS
REVISED BY
DATE REVISED
P:\proj3\03\33c890\drafting\33c890ob001.dgn

LAST REVISION DATE PLOTTED => 13-SEP-2010
TIME PLOTTED => 11:26

BORDER LAST REVISED 7/1/2010
USERNAME => s128033
DGN FILE => 33c890ob001.dgn
RELATIVE BORDER SCALE IS IN INCHES 0 1 2 3
UNIT 0389
PROJECT NUMBER & PHASE 0300011221

G83-2<CA>
G27-1<CA>
6.0" Radius, 2.0" Border, White on Green;
[EXIT 553] E;
12.0" Radius, 2.0" Border, White on Green;
[Winters] E Mod; [San Francisco] E Mod;
[JCT 1 MILE] E;

BS-21

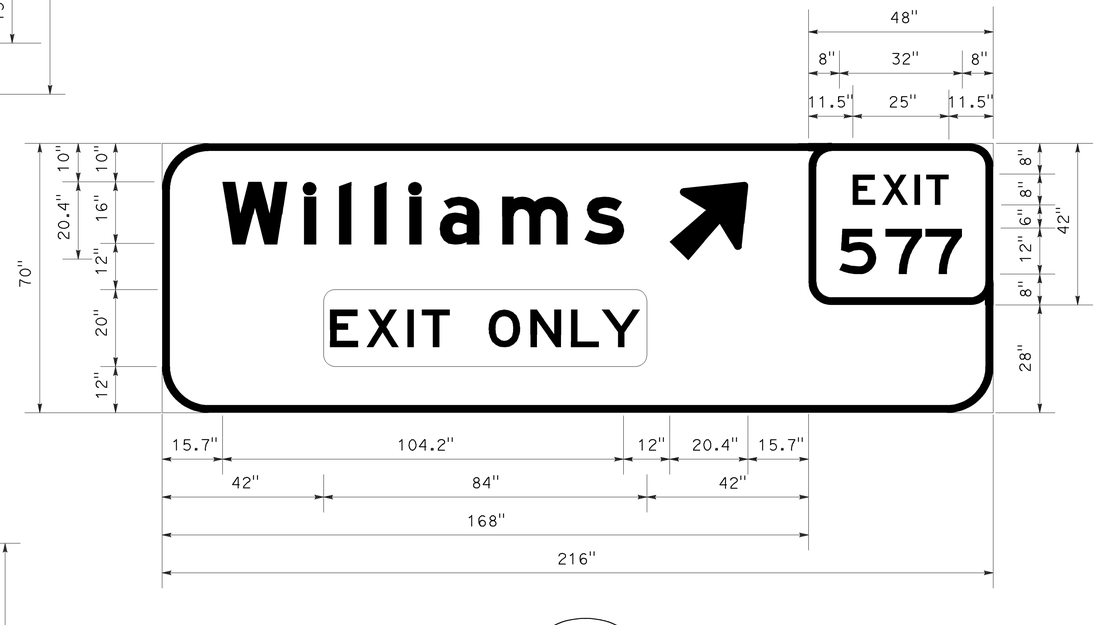

G85-1<CA>
12.0" Radius, 2.0" Border, White on Green;
[Williams] E Mod; Arrow 16CAP-1L - 25.0" 45 degree; W61C<CA>;
6.0" Radius, 2.0" Border, White on Green;
[EXIT] E; [577] E;

JS-3

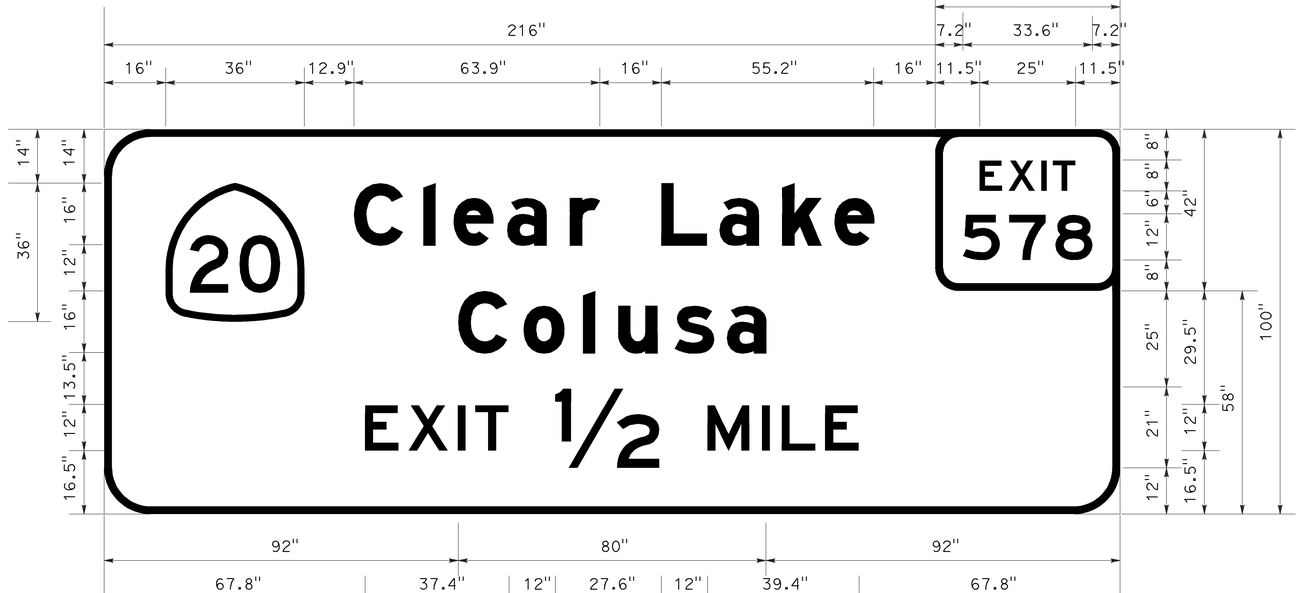

G83-2<CA>
G28-1<CA>
12.0" Radius, 2.0" Border, White on Green;
[Clear Lake] E Mod;
[Colusa] E Mod; [EXIT 1/2 MILE] E;
6.0" Radius, 2.0" Border, White on Green;
[EXIT] E; [578] E;

JS-2

SIGN DETAILS

NO SCALE

SD-2

Dist	COUNTY	ROUTE	POST MILES TOTAL PROJECT	SHEET No.	TOTAL SHEETS
03	Yol,Col	5	R21.5/R23.8,R27.0/R28.9 R0.0/R21.0	41	87

Joyce K. Loftus — REGISTERED CIVIL ENGINEER — 5-10-10 DATE

Joyce K. Loftus No. 38426 Exp. 3-31-11 CIVIL — REGISTERED PROFESSIONAL ENGINEER — STATE OF CALIFORNIA

5-10-10
PLANS APPROVAL DATE

THE STATE OF CALIFORNIA OR ITS OFFICERS OR AGENTS SHALL NOT BE RESPONSIBLE FOR THE ACCURACY OR COMPLETENESS OF ELECTRONIC COPIES OF THIS PLAN SHEET.

REVISED BY | DATE REVISED

CALCULATED-DESIGNED BY | CHECKED BY

FUNCTIONAL SUPERVISOR: JOSEPH W. HORTON

STATE OF CALIFORNIA - DEPARTMENT OF TRANSPORTATION
TRAFFIC

Caltrans

P:\proj3\03\3c890\drafting\33c890ob002.dgn

LAST REVISION | DATE PLOTTED => 13-SEP-2010 | TIME PLOTTED => 11:26
05-10-10

BORDER LAST REVISED 7/1/2010 | USERNAME => s128033 | DGN FILE => 33c890ob002.dgn | RELATIVE BORDER SCALE IS IN INCHES 0 1 2 3 | UNIT 0389 | PROJECT NUMBER & PHASE 0300011221

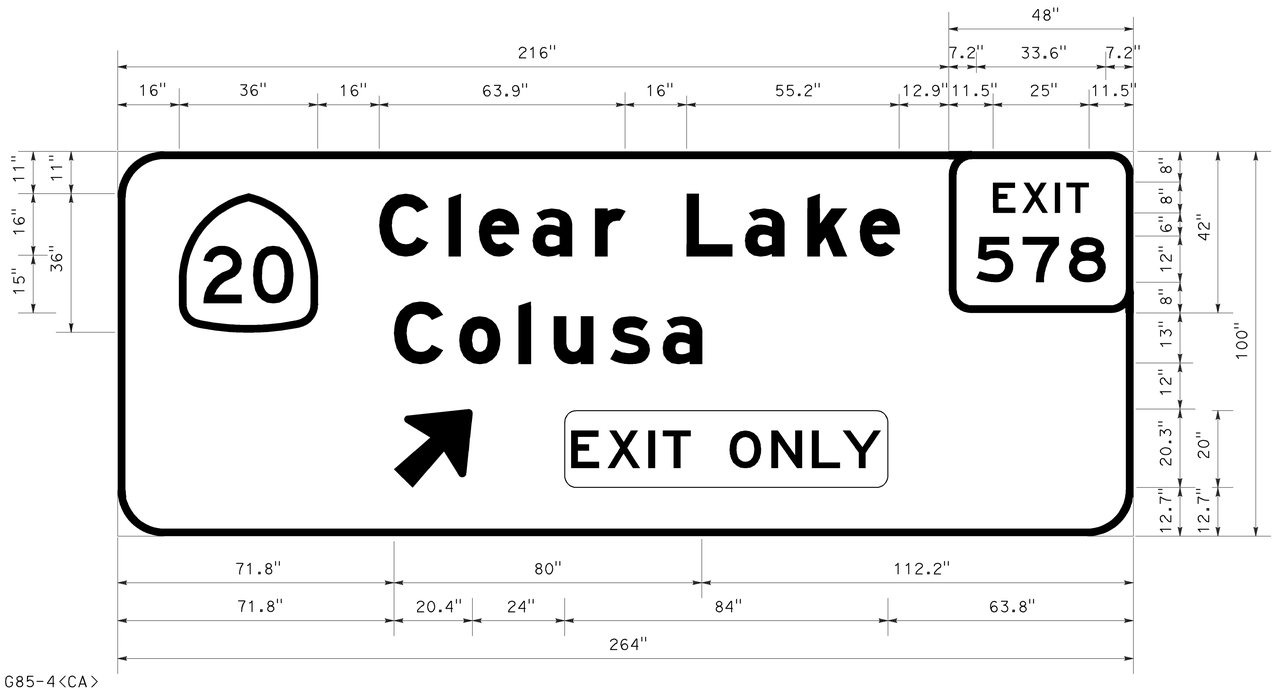

G85-4<CA>
G28-1<CA>
12.0" Radius, 2.0" Border, White on Green;
[Clear Lake] E Mod;
[Colusa] E Mod; Arrow 16CAP-1L - 25.0" 45 degree; W61C<CA>;
6.0" Radius, 2.0" Border, White on Green;
[EXIT] E; [578] E;

JS-4

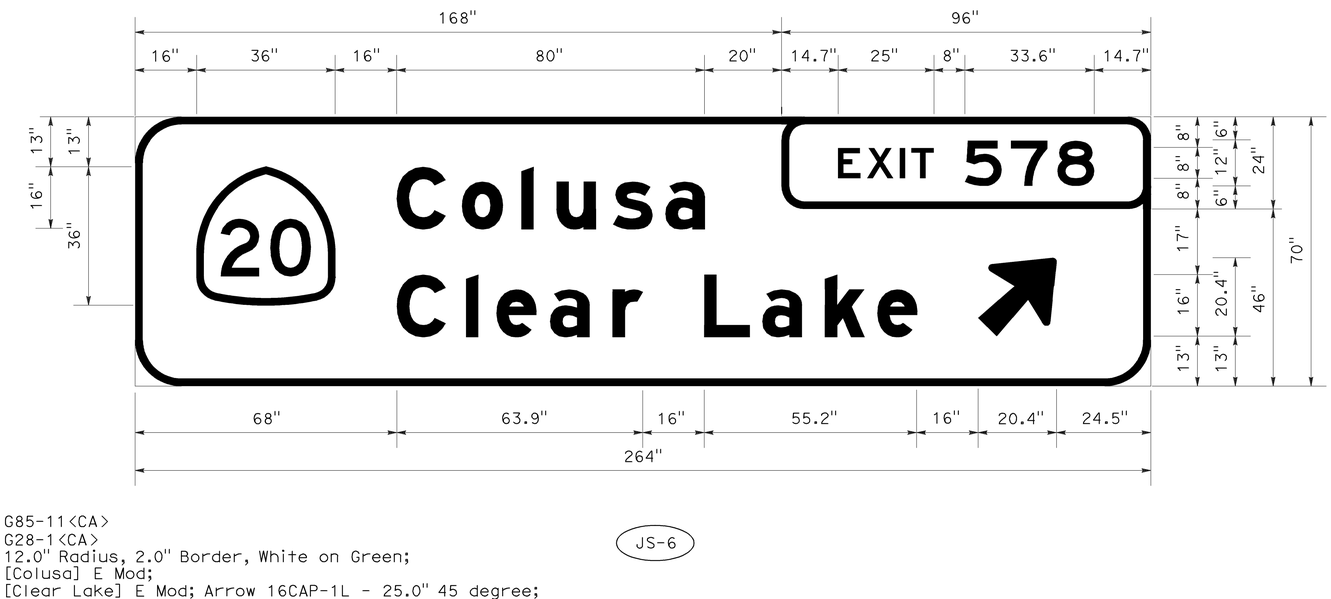

G85-11<CA>
G28-1<CA>
12.0" Radius, 2.0" Border, White on Green;
[Colusa] E Mod;
[Clear Lake] E Mod; Arrow 16CAP-1L - 25.0" 45 degree;
6.0" Radius, 2.0" Border, White on Green;
[EXIT 578] E;

JS-6

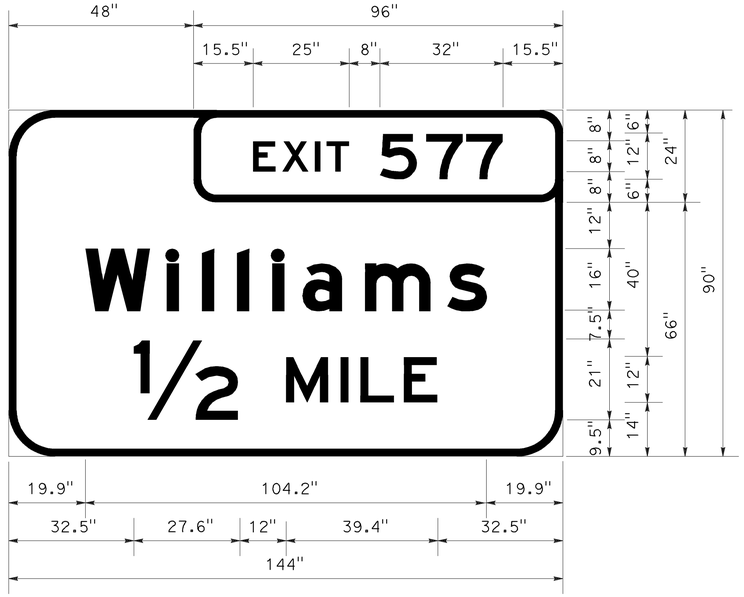

JS-5

G83-5<CA>
12.0" Radius, 2.0" Border, White on Green;
[Williams] E Mod; [1/2 MILE] E;
6.0" Radius, 2.0" Border, White on Green;
[EXIT 577] E;

SIGN DETAILS

NO SCALE

SD-3

Dist	COUNTY	ROUTE	POST MILES TOTAL PROJECT	SHEET No.	TOTAL SHEETS
03	Yol,Col	5	R21.5/R23.8,R27.0/R28.9 R0.0/R21.0	42	87

Joyce K Loftus — REGISTERED CIVIL ENGINEER — 5-10-10 DATE

5-10-10 PLANS APPROVAL DATE

REGISTERED PROFESSIONAL ENGINEER — Joyce K. Loftus — No. 38426 — Exp. 3-31-11 — CIVIL — STATE OF CALIFORNIA

THE STATE OF CALIFORNIA OR ITS OFFICERS OR AGENTS SHALL NOT BE RESPONSIBLE FOR THE ACCURACY OR COMPLETENESS OF ELECTRONIC COPIES OF THIS PLAN SHEET.

REVISED BY | DATE REVISED

CALCULATED-DESIGNED BY | CHECKED BY

FUNCTIONAL SUPERVISOR: JOSEPH W. HORTON

STATE OF CALIFORNIA - DEPARTMENT OF TRANSPORTATION
TRAFFIC
Caltrans

P:\proj3\03\3c890\drafting\33c890ob003.dgn

LAST REVISION | DATE PLOTTED => 13-SEP-2010
05-10-10 | TIME PLOTTED => 11:26

Dist	COUNTY	ROUTE	POST MILES TOTAL PROJECT	SHEET No.	TOTAL SHEETS
03	Yol,Col	5	R21.5/R23.8,R27.0/R28.9 R0.0/R21.0	43	87

Joyce K Loftus 5-10-10
REGISTERED CIVIL ENGINEER DATE

5-10-10
PLANS APPROVAL DATE

REGISTERED PROFESSIONAL ENGINEER — Joyce K. Loftus No. 38426 Exp. 3-31-11 CIVIL — STATE OF CALIFORNIA

THE STATE OF CALIFORNIA OR ITS OFFICERS OR AGENTS SHALL NOT BE RESPONSIBLE FOR THE ACCURACY OR COMPLETENESS OF ELECTRONIC COPIES OF THIS PLAN SHEET.

OVERHEAD SIGN QUANTITIES

SIGN NUMBER (oval)	FURNISH SIGN STRUCTURE (BRIDGE MOUNTED WITH WALKWAY)	INSTALL SIGN STRUCTURE (BRIDGE MOUNTED WITH WALKWAY)	FURNISH SIGN STRUCTURE (TRUSS)	INSTALL SIGN STRUCTURE (TRUSS)	60" CIDH CONCRETE PILE (SIGN FOUNDATION)	REMOVE BRIDGE MOUNTED SIGN	REMOVE SIGN STRUCTURE
	LB	LB	LB	LB	LF	EA	EA
BS-21 (Exist)						1	
BS-21	3,195	3,195					
JS-2 (Exist)						1	
JS-2	3,044	3,044					
JS-3 (Exist)							1
JS-3			15,593	15,593	22		
JS-4 (Exist)							1
JS-4			18,130	18,130	23		
JS-5 (Exist)						1	
JS-5	1,843	1,843					
JS-6 (Exist)							1
JS-6			15,724	15,724	22		
TOTAL	8,082	8,082	49,447	49,447	67	3	3

ROADSIDE SIGN QUANTITIES

SIGN NUMBER (SHT-NO.)	SIGN CODE		REMOVE ROADSIDE SIGN (EACH)
	FEDERAL	CALIFORNIA	
1-1		G83-5	1
		TOTAL	1

OVERHEAD SIGN PANEL QUANTITIES (CONTRACTOR-FURNISHED)

SIGN CODE	OVERHEAD SIGN NUMBER	SIGN SIZE L X D (INCHES)	SIGN AREA (SQFT)	NUMBER OF SIGNS	BACKGROUND		LEGEND		PROTECTIVE OVERLAY	FURNISH LAMINATED PANEL SIGN (1"-TYPE A)	REMARKS
					SHEETING COLOR	RETROREFLECTIVE ASTM TYPE	SHEETING COLOR	RETROREFLECTIVE ASTM TYPE	PREMIUM	SQFT	
G83-2<CA>	BS-21	288 X 100	200.00	1	GREEN	IV	WHITE	IX	X	200.00	G27-1<CA>
G83-2<CA>	JS-2	264 X 100	183.33	1	GREEN	IV	WHITE	IX	X	183.33	G28-1<CA>
G83-5<CA>	JS-5	144 X 90	90.00	1	GREEN	IV	WHITE	IX	X	90.00	
G85-1<CA>	JS-3	216 X 70	105.00	1	GREEN	IV	WHITE	IX	X	105.00	W61C<CA>
G85-4<CA>	JS-4	264 X 100	183.33	1	GREEN	IV	WHITE	IX	X	183.33	G28-1<CA>, W61C<CA>
G85-11<CA>	JS-6	264 X 70	128.33	1	GREEN	IV	WHITE	IX	X	128.33	G28-1<CA>
									TOTAL	889.99	

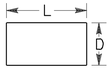

L = LENGTH OF SIGN
D = DEPTH OF SIGN

NOTES:
1. CALIFORNIA SIGN CODES ARE DESIGNATED BY <CA>. OTHERWISE, FEDERAL SIGN CODES ARE SHOWN.
2. FOR "SIGN MESSAGE/DESCRIPTION" INFORMATION FOR THE OVERHEAD PANELS, SEE SIGN PLANS.
3. USE RETROREFLECTIVE ASTM TYPE III YELLOW SHEETING FOR ALL W61C<CA> PANELS.

SIGN QUANTITIES

SQ-1

REVISED BY | DATE REVISED
CALCULATED-DESIGNED BY | CHECKED BY
FUNCTIONAL SUPERVISOR: JOSEPH W. HORTON

STATE OF CALIFORNIA - DEPARTMENT OF TRANSPORTATION
TRAFFIC
Caltrans

P:\proj3\03\3c890\drafting\33c890oc001.dgn

LAST REVISION 04-30-10 | DATE PLOTTED => 13-SEP-2010 | TIME PLOTTED => 11:26

BORDER LAST REVISED 7/1/2010 | USERNAME => s128033 | DGN FILE => 33c890oc001.dgn | RELATIVE BORDER SCALE IS IN INCHES 0 1 2 3 | UNIT 0389 | PROJECT NUMBER & PHASE 0300011221

Dist	COUNTY	ROUTE	POST MILES TOTAL PROJECT	SHEET No.	TOTAL SHEETS
03	Yol, Col	5	R21.5/R23.8,R27.0/ R28.9,R0.0/R21.0	44	87

Ana Serrano — REGISTERED CIVIL ENGINEER — 5-4-10 DATE

5-10-10 PLANS APPROVAL DATE

REGISTERED PROFESSIONAL ENGINEER — ANA SERRANO No. 65977 Exp 6-30-12 CIVIL — STATE OF CALIFORNIA

THE STATE OF CALIFORNIA OR ITS OFFICERS OR AGENTS SHALL NOT BE RESPONSIBLE FOR THE ACCURACY OR COMPLETENESS OF SCANNED COPIES OF THIS PLAN SHEET.

ROADWAY QUANTITIES

COUNTY	LOCATION/ DESCRIPTION	DIRECTION	RUBBERIZED WARM MIX ASPHALT (OPEN GRADED)	RUBBERIZED WARM MIX ASPHALT (GAP GRADED)	IMPORTED MATERIAL (SHOULDER BACKING)
		NB/SB	TON	TON	TON
Yol	PM R21.5 TO R22.8	NB	1,368	3,972	770
Yol	PM R27.0 TO R28.9	NB	1,988	5,773	1,118
Yol	COUNTY LINE Rd OFF RAMP	NB	116	409	88
Col	PM R0.0 TO R21.0	NB	22,279	64,537	11,849
Col	COUNTY LINE Rd ON RAMP	NB	149	548	98
Col	HILLGATE Rd OFF RAMP	NB	129	447	101
Col	PUTMAN LATERAL OFF RAMP	NB	95	332	72
Col	PUTMAN LATERAL ON RAMP	NB	82	281	53
Col	HAHN Rd OFF RAMP	NB	131	473	102
Col	HAHN Rd ON RAMP	NB	152	539	106
Col	HUSTED Rd OFF RAMP	NB	148	506	110
Col	HUSTED Rd ON RAMP	NB	112	417	76
Col	E St OFF RAMP	NB	127	440	100
Col	E St ON RAMP	NB	97	383	77
Col	ROUTE 20 OFF RAMP	NB	157	532	120
Col	ROUTE 20 ON RAMP	NB	213	698	145
Yol	PM R21.5 TO R22.8	SB	1,368	3,972	770
Yol	PM R27.0 TO R28.9	SB	1,988	5,773	1,118
Yol	COUNTY LINE Rd ON RAMP	SB	138	551	88
Col	PM R0.0 TO R21.0	SB	22,311	64,599	11,849
Col	COUNTY LINE Rd OFF RAMP	SB	119	422	84
Col	HILLGATE Rd ON RAMP	SB	92	337	56
Col	HILLGATE Rd OFF RAMP	SB	74	273	56
Col	PUTMAN LATERAL ON RAMP	SB	73	273	54
Col	PUTMAN LATERAL OFF RAMP	SB	100	354	76
Col	HAHN Rd ON RAMP	SB	154	538	105
Col	HAHN Rd OFF RAMP	SB	122	434	92
Col	HUSTED Rd ON RAMP	SB	129	434	86
Col	HUSTED Rd OFF RAMP	SB	144	483	106
Col	E St ON RAMP	SB	140	467	92
Col	E St OFF RAMP	SB	129	462	101
Col	ROUTE 20 ON RAMP	SB	153	789	109
Col	ROUTE 20 OFF RAMP	SB	216	713	156
		TOTAL	54,793	161,161	29,983

TACK COAT

LOCATION	TON
Yol/Col PM R21.5/R22.8,R27.0/R28.9,R0.0/R21.0	439

HMA DIKE

COUNTY	LOCATION	DIRECTION-SIDE	PLACE HMA DIKE (TYPE A)	PLACE HMA DIKE (TYPE C)	PLACE HMA DIKE (TYPE D)	PLACE HMA DIKE (TYPE E)	PLACE HMA DIKE (TYPE F)	HOT MIX ASPHALT (TYPE A)
			LF	LF	LF	LF	LF	TON
Yol	PM R28.46	NB-Rt		129			226	4.02
Col	PM R2.71	NB-Rt				782		20.64
Col	PM R3.06	NB-Rt			750			44.61
Col	PM R3.36	NB-Rt	550					15.07
Col	PM R3.89	NB-Rt			157			9.34
Col	PM R3.92	NB-Rt			325			19.33
Col	PM R4.51	NB-Rt			202		44	12.60
Col	PM R4.56	NB-Rt				384		10.13
Col	PM R4.67	NB-Rt				991	64	27.01
Col	PM R6.85	NB-Rt			20			1.19
Col	PM R6.97	NB-Rt	12		231			14.07
Col	PM R7.24	NB-Rt			317			
Col	PM R7.60	NB-Rt			346			20.58
Col	PM R13.40	NB-Rt		32			50	0.92
Col	PM R16.28	NB-Rt	513				765	24.31
Col	PM R16.60	NB-Rt					460	6.16
Col	COUNTY LINE Rd ON RAMP	NB-Rt	520					14.25
Col	HILLGATE Rd OFF RAMP	NB-Lt	972	100				27.41
Col	E St ON RAMP	NB-Lt & Rt	217					5.95
Col	E St OFF RAMP	NB-Rt	32					
Col	ROUTE 20 OFF RAMP	NB-Lt & Rt			748			44.49
Col	ROUTE 20 ON RAMP	NB-Lt & Rt			714			42.47
Col	PM R16.92	SB-Rt		340			980	15.75
Col	PM R13.36	SB-Rt		30			60	1.04
Col	PM R12.61	SB-Rt		38			54	1.02
Col	PM R7.71	SB-Rt		30				0.23
Col	PM R7.35	SB-Rt				265		7.00
Col	PM R7.30	SB-Rt			200		175	2.30
Col	PM R7.00	SB-Rt				51		1.35
Col	PM R4.70	SB-Rt		215			70	2.60
Col	PM R3.16	SB-Rt	770					21.10
Col	PM R2.99	SB-Rt		110		650	410	23.50
Col	ROUTE 20 ON RAMP	SB-Lt					185	2.47
Col	ROUTE 20 ON RAMP	SB-Rt					1110	14.87
Col/Yol	STRUCTURE APPROACHES	NB/SB						4,204.60
		TOTAL	3586	1024	4010	3123	4653	4,662.38

STRUCTURE APPROACH QUANTITIES

LOCATION	HMA (TYPE A)	ROADWAY EXCAVATION	CLASS 2 AB
	TON	CY	CY
OAT CREEK Br	524.50	81.3	
BUCKEYE CREEK Br	524.50	81.3	
PETROLEUM CREEK Br	524.50	81.3	
HILLGATE Rd Br	524.50	81.3	
MVP HILLGATE OFF RAMP	8.60	10.2	6
N ARBUCKLE UC Br	524.50	81.3	
WILLIAMS OH Br	524.50	81.3	
SALT CREEK Br	524.50	81.3	
FRESH CREEK Br	524.50	81.3	
TOTAL	4,204.60*	660.6	6

* FOR TOTAL QUANTITY, SEE HMA DIKE TABLE

SUMMARY OF QUANTITIES
Q-1

REVISED BY: ANA SERRANO — DATE REVISED:
CALCULATED-DESIGNED BY: ANA SERRANO — CHECKED BY:
FUNCTIONAL SUPERVISOR: GILBERT OGAZ

STATE OF CALIFORNIA - DEPARTMENT OF TRANSPORTATION
Caltrans®
NORTH REGION
OFFICE OF DESIGN SOUTH
DESIGN BRANCH S2

LAST REVISION — DATE PLOTTED => 13-SEP-2010 — TIME PLOTTED => 11:26
00-00-00

BORDER LAST REVISED 7/1/2010 | USERNAME => s128033 | DGN FILE => 33c890pa001.dgn | RELATIVE BORDER SCALE IS IN INCHES 0 1 2 3 | UNIT 0322 | PROJECT NUMBER & PHASE 03000011221

Dist	COUNTY	ROUTE	POST MILES TOTAL PROJECT	SHEET No.	TOTAL SHEETS
03	Yol, Col	5	R21.5/R23.8,R27.0/ R28.9,R0.0/R21.0	45	87

Ana Serrano — REGISTERED CIVIL ENGINEER — 5-4-10 DATE

5-10-10 PLANS APPROVAL DATE

REGISTERED PROFESSIONAL ENGINEER — ANA SERRANO No. 65977 Exp 6-30-12 CIVIL — STATE OF CALIFORNIA

THE STATE OF CALIFORNIA OR ITS OFFICERS OR AGENTS SHALL NOT BE RESPONSIBLE FOR THE ACCURACY OR COMPLETENESS OF SCANNED COPIES OF THIS PLAN SHEET.

REPLACE ASPHALT CONCRETE SURFACING

COUNTY	LOCATION/ DESCRIPTION	DIRECTION	POST MILE		LANE No. & ½ LANE SIDE	REPLACE ASPHALT CONCRETE SURFACING
		NB/SB	BEGIN	END		CY
Yol	MAINLINE	NB	R27.00	R27.02	2	14.8
Yol	MAINLINE	NB	R27.40	R27.40	2-Rt	1.9
Yol	MAINLINE	NB	R27.76	R27.78	2	7.4
Yol	MAINLINE	NB	R28.13	R28.16	1&2	22.2
Col	MAINLINE	NB	R1.00	R1.01	2-Rt	3.7
Col	MAINLINE	NB	R1.20	R1.22	2-Rt	7.4
Col	MAINLINE	NB	R1.40	R1.44	2	29.6
Col	MAINLINE	NB	R1.60	R1.64	2	14.8
Col	MAINLINE	NB	R2.28	R2.30	2	14.8
Col	MAINLINE	NB	R4.00	R4.01	2-Rt	3.7
Col	MAINLINE	NB	R6.40	R6.43	2	22.2
Col	MAINLINE	NB	R6.80	R6.81	1	7.4
Col	MAINLINE	NB	R6.80	R6.82	2	14.8
Col	MAINLINE	NB	R6.90	R6.92	1	14.8
Col	MAINLINE	NB	R7.00	R7.06	1	44.4
Col	MAINLINE	NB	R7.10	R7.13	1	22.2
Col	MAINLINE	NB	R7.20	R7.22	2	7.4
Col	MAINLINE	NB	R7.20	R7.22	1	18.5
Col	MAINLINE	NB	R10.60	R10.62	1&2	29.6
Col	MAINLINE	NB	R10.60	R10.62	2-Lt	7.4
Col	MAINLINE	NB	R10.70	R10.73	2-Lt	11.1
Col	MAINLINE	NB	R10.80	R10.81	2	3.7
Col	MAINLINE	NB	R11.10	R11.15	1&2	74.1
Col	MAINLINE	NB	R17.10	R17.13	2	11.1
Col	MAINLINE	NB	R18.00	R18.03	3	22.2
Col	Co LINE Rd RAMPS	NB			1	74.1
Col	HILLGATE Rd RAMPS	NB			1	37.0
Col	PUTMAN LATERAL RAMPS	NB			1	74.1
Col	HAHN Rd RAMPS	NB			1	74.1
Col	HUSTED Rd RAMPS	NB			1	74.1
Col	E. St RAMPS	NB			1	59.3
Col	Rte 20 RAMPS	NB			1	59.3
Yol	MAINLINE	SB	R27.50	R27.55	2-Rt	18.5
Yol	MAINLINE	SB	R28.50	R28.51	2	7.4
Col	MAINLINE	SB	R2.10	R2.11	2-Rt	3.7
Col	MAINLINE	SB	R10.10	R10.11	2	3.7
Col	MAINLINE	SB	R10.30	R10.31	2	3.7
Col	MAINLINE	SB	R10.40	R10.41	1&2	14.8
Col	MAINLINE	SB	R10.50	R10.51	2	3.7
Col	MAINLINE	SB	R10.60	R10.61	2	3.7
Col	MAINLINE	SB	R11.60	R11.66	2	22.2
Col	MAINLINE	SB	R11.70	R11.72	2	7.4
Col	MAINLINE	SB	R11.80	R11.81	2	3.7
Col	MAINLINE	SB	R16.90	R16.92	2	14.8
Col	MAINLINE	SB	R19.50	R19.51	2	7.4
Col	MAINLINE	SB	R19.50	R19.52	2	7.4
Col	MAINLINE	SB	R19.60	R19.65	2	37.0
Col	MAINLINE	SB	R19.80	R19.81	2	7.4
Col	MAINLINE	SB	R20.05	R20.06	2	3.7
Col	Co LINE Rd RAMPS	SB			1	74.1
Col	HILLGATE Rd RAMPS	SB			1	37.0
Col	PUTMAN LATERAL RAMPS	SB			1	74.1
Col	HAHN Rd RAMPS	SB			1	74.1
Col	HUSTED Rd RAMPS	SB			1	74.1
Col	E St RAMPS	SB			1	59.3
Col	Rte 20 RAMPS	SB			1	59.3
TOTAL						1505.6

TRAFFIC HANDLING QUANTITIES

LOCATION	DIRECTION	CHANNELIZER (SURFACE MOUNTED)	Temp CRASH CUSHION MODULE	Temp RAILING (TYPE K)
		EA	EA	LF
PM R6.7 TO PM R7.7	NB	5	14	5,400
PM R6.7 TO PM R7.7	SB	5	14	5,400
TOTAL		10	28	10,800

RELAY PIPE AND ENTRANCE TAPER

COUNTY	LOCATION	DIRECTION	RELAY ENTRANCE TAPER AND PIPE DOWNDRAIN	RELAY ENTRANCE TAPER
			EA	EA
Col	PM R2.71	NB		1
Col	PM R3.06	NB		1
Col	PM R3.36	NB		1
Col	PM R3.92	NB	1	
Col	PM R4.51	NB		1
Col	PM R13.40	NB		1
Col	PM R16.28	NB		1
Col	PM R16.92	SB		1
Col	PM R13.39	SB		1
Col	PM R12.60	SB		1
Col	PM R12.59	SB		1
Col	PM R4.71	SB		1
Col	PM R4.66	SB		1
Col	PM R3.03	SB		1
Col	PM R2.97	SB		1
Col	PM R2.95	SB		1
TOTAL			1	15

RUMBLE STRIP

COUNTY	ROUTE	DIRECTION	LOCATION PM TO PM	R+/L+	LNMI	RUMBLE STRIP (INSIDE SHOULDER)	RUMBLE STRIP (OUTSIDE SHOULDER)
						LF	STA	STA
Yol	5	NB/SB	R21.5 TO R22.8	R+/L+	1.3	6,864	68	68
Yol	5	NB/SB	R27.0 TO R28.9	R+/L+	1.9	10,032	100	100
Col	5	NB/SB	R0.0 TO R21.0	R+/L+	21.0	110,880	1,108	1,108
					SUBTOTAL	1,276	1,276	
					TOTAL	2,552		

TEMPORARY CONSTRUCTION BMPS

ITEM/DESCRIPTION	UNIT	QUANTITY
TEMPORARY DRAINAGE INLET PROTECTION	EA	27
TEMPORARY CONCRETE WASHOUT FACILITY	EA	1

SUMMARY OF QUANTITIES
Q-2

REVISED BY | DATE REVISED

ANA SERRANO | ANA SERRANO

CALCULATED-DESIGNED BY | CHECKED BY

FUNCTIONAL SUPERVISOR: GILBERT OGAZ

STATE OF CALIFORNIA - DEPARTMENT OF TRANSPORTATION
NORTH REGION
OFFICE OF DESIGN SOUTH
DESIGN BRANCH S2

LAST REVISION | DATE PLOTTED => 13-SEP-2010 | 00-00-00 | TIME PLOTTED => 11:26

BORDER LAST REVISED 7/1/2010 | USERNAME => s128033 | DGN FILE => 33c890pa002.dgn | RELATIVE BORDER SCALE IS IN INCHES 0 1 2 3 | UNIT 0322 | PROJECT NUMBER & PHASE 03000011221

Dist	COUNTY	ROUTE	POST MILES TOTAL PROJECT	SHEET No.	TOTAL SHEETS
03	Yol, Col	5	R21.5/R23.8,R27.0/ R28.9,R0.0/R21.0	46	87

Ana Serrano — REGISTERED CIVIL ENGINEER — 5-4-10 DATE

5-10-10 PLANS APPROVAL DATE

REGISTERED PROFESSIONAL ENGINEER — ANA SERRANO No. 65977 Exp 6-30-12 CIVIL — STATE OF CALIFORNIA

THE STATE OF CALIFORNIA OR ITS OFFICERS OR AGENTS SHALL NOT BE RESPONSIBLE FOR THE ACCURACY OR COMPLETENESS OF SCANNED COPIES OF THIS PLAN SHEET.

MBGR QUANTITIES

LOCATION	COUNTY	ROUTE	POSTMILE	DESCRIPTION	DIRECTION	REMOVE MBGR	REMOVE DOUBLE METAL BEAM BARRIER	ALT IN-LINE TERMINAL SYSTEM	ALT FLARED TERMINAL SYSTEM	END ANCHOR ASSY (TYPE SFT)	(N) MBGR (TYPICAL LAYOUT)	METAL BEAM GUARD RAILING	DOUBLE METAL BEAM GUARD RAILING (7'WOOD POST)	METAL BEAM GUARD RAIL (7'WOOD POST)	DOUBLE MBGR (WOOD POST)	TRANSITION RAILING (TYPE WB)	MINOR CONCRETE (MINOR STRUCTURE)	(N) CONCRETE END BLOCK	BURIED POST ANCHOR
						LF	LF	EA	EA	EA	TYPE	LF	LF		LF	EA	CY	EA	EA
1	Yol	5	R21.8	OAT CREEK Br No. 22-135, Med Shld	NB	25.0					12E	25.0				1			
2	Yol	5	R21.8	OAT CREEK Br No. 22-135, Rt Shld	NB	200.0			1		12B	200.0				1			
3	Yol	5	R22.5	MBGR SHIELDING A CANAL, Rt Shld	NB	200.0			1	1	16B	200.0							
4	Yol	5	R22.6	ATTACH TO Br No. 22-143R, Rt Shld	NB				1		12B					1			
5	Yol	5	R28.6	ATTACH TO Br No. 22-137 (BUCKEYE CREEK), Med Shld	NB	25.0					12E	25.0				1			
6	Yol	5	R28.6	ATTACH TO Br No. 22-137 (BUCKEYE CREEK), Rt Shld	NB	200.0			1		12B	200.0				1			
7	Col	5	R2.0	ATTACH TO Br No. 15-64 (PETROLEUM CREEK), Med Shld	NB	25.0					12E	25.0				1			
8	Col	5	R2.0	ATTACH TO Br No. 15-64 (PETROLEUM CREEK), Rt Shld	NB	200.0			1		12B	200.0				1			
9	Col	5	R3.0	MBGR SHIELDING A CANAL (BRUSH CREEK), Rt Shld	NB	25.0			1	1	16B	25.0							
10	Col	5	R4.3	MBGR SHIELDING A CANAL, Rt Shld	NB	25.0			1	1	16B	25.0							
11	Col	5	R4.6	MBGR SHIELDING A CANAL, Rt Shld	NB	200.0			1	1	16B	200.0							
12	Col	5	R4.7	MBGR SHIELDING A CANAL, Rt Shld	NB	200.0			1	1	16B	200.0							
13	Col	5	R5.3	MBGR SHIELDING A CANAL, Rt Shld	NB	25.0			1	1	16B	25.0							
14	Col	5	R5.8	MBGR SHIELDING A CANAL, Rt Shld	NB	25.0			1	1	16B	25.0							
15	Col	5	R6.0	MBGR SHIELDING A CANAL, Rt Shld	NB	25.0			1	1	16B	25.0							
16	Col	5	R6.4	MBGR SHIELDING A CANAL, Rt Shld	NB	25.0			1	1	16B	25.0							
17	Col	5	R6.6	ATTACH TO Br No. 15-47, Rt Shld	NB	850.0			1		12B	850.0				1			
18	Col	5	R7.0	ATTACH TO RETAINING WALL, Rt Shld	NB	75.0					12C	75.0				1			1
19	Col	5	R7.7	ATTACH TO Br No. 15-62, Rt Shld	NB	200.0			1		12B	200.0				1			
20	Col	5	R8.0	ATTACH TO BRIDGE No. 15-05 (SALT CREEK), Med Shld	NB	25.0					12E	25.0				1			
21	Col	5	R8.0	ATTACH TO BRIDGE No. 15-05 (SALT CREEK), Rt Shld	NB	200.0			1		12B	200.0				1			
22	Col	5	R9.8	ATTACH TO BRIDGE No. 15-07 (SAND CREEK), Med Shld	NB	25.0					12E	25.0				1			
23	Col	5	R9.8	ATTACH TO BRIDGE No. 15-07 (SAND CREEK), Rt Shld	NB	200.0			1		12B	200.0				1			
24	Col	5	R12.5	ATTACH TO BRIDGE No. 15-09 (CORTINA CREEK), Med Shld	NB	25.0					12E	25.0				1			
25	Col	5	R12.5	ATTACH TO BRIDGE No. 15-09 (CORTINA CREEK), Rt Shld	NB	200.0			1		12B	200.0				1			
26	Col	5	R13.4	MBGR SHIELDING A CANAL, Rt Shld	NB	200.0			1	1	11B	200.0							
27	Col	5	R16.4	ATTACH TO Br No. 15-66R, (WILLIAMS OH) Rt Shld	NB	712.5			1		12B	412.5	300	300		1			
28	Col	5	R16.5	ATTACH TO Br No. 15-66R, (WILLIAMS OH) Med Shld	NB	25.0					12E	25.0				1			
29	Col	5	R16.6	ATTACH TO Br No. 15-66R, Rt Shld	NB	1,600.0		1			12AA	1,600.0				1	0.6	1	
30	Col	5	R17.7	MBGR SHIELDING SIGN, Rt Shld	NB	50.0			1	1	11B	50.0							
31	Col	5	R18.2	MBGR SHIELDING SIGN, Rt Shld	NB	50.0			1	1	11B	50.0							
32	Col	5	R19.2	ATTACH TO BRIDGE No. 15-73R (SALT CREEK II), Med Shld	NB	25.0					12E	25.0				1			
33	Col	5	R19.2	ATTACH TO BRIDGE No. 15-73R (SALT CREEK II), Rt Shld	NB	200.0			1		12B	200.0				1			
34	Col	5	R19.6	ATTACH TO BRIDGE No. 15-71R (FRESHWATER CREEK), Med Shld	NB	25.0					12E	25.0				1			
35	Col	5	R19.6	ATTACH TO BRIDGE No. 15-71R (FRESHWATER CREEK), Rt Shld	NB	200.0			1		12B	200.0				1			
36	Col	5	R19.7	ATTACH TO Br No. 15-71L (FRESHWATER CREEK), Med Shld	SB	25.0					12E	25.0				1			
				SUBTOTAL		6,337.5		1	24	12		6,037.5	300	300		24	0.6	1	1

(N)- NOT A SEPARATE PAY ITEM, FOR INFORMATION ONLY

SUMMARY OF QUANTITIES

Q-3

CALCULATED-DESIGNED BY

CHECKED BY

ANA SERRANO — REVISED BY

ANA SERRANO — DATE REVISED

FUNCTIONAL SUPERVISOR

GILBERT OGAZ

STATE OF CALIFORNIA - DEPARTMENT OF TRANSPORTATION

Caltrans®

NORTH REGION
OFFICE OF DESIGN SOUTH
DESIGN BRANCH S2

LAST REVISION | DATE PLOTTED => 13-SEP-2010
00-00-00 | TIME PLOTTED => 11:26

BORDER LAST REVISED 7/1/2010

USERNAME => s128033
DGN FILE => 33c890pa003.dgn

RELATIVE BORDER SCALE IS IN INCHES 0 1 2 3

UNIT 0322

PROJECT NUMBER & PHASE 03000011221

Dist	COUNTY	ROUTE	POST MILES TOTAL PROJECT	SHEET No.	TOTAL SHEETS
03	Yol, Col	5	R21.5/R23.8,R27.0/ R28.9,R0.0/R21.0	47	87

Ana Serrano — REGISTERED CIVIL ENGINEER — 5-4-10 DATE

5-10-10 PLANS APPROVAL DATE

REGISTERED PROFESSIONAL ENGINEER — ANA SERRANO No. 65977 Exp 6-30-12 CIVIL — STATE OF CALIFORNIA

THE STATE OF CALIFORNIA OR ITS OFFICERS OR AGENTS SHALL NOT BE RESPONSIBLE FOR THE ACCURACY OR COMPLETENESS OF SCANNED COPIES OF THIS PLAN SHEET.

MBGR QUANTITIES (CONTINUED)

LOCATION	COUNTY	ROUTE	POSTMILE	DESCRIPTION	DIRECTION	REMOVE MBGR	REMOVE DOUBLE METAL BEAM BARRIER	ALT IN-LINE TERMINAL SYSTEM	ALT FLARED TERMINAL SYSTEM	END ANCHOR ASSEMBLY (TYPE SFT)	(N) MBGR (TYPICAL LAYOUT)	METAL BEAM GUARD RAILING	DOUBLE METAL BEAM GUARD RAILING (7' WOOD POST)	MBGR (7' WOOD POST)	DOUBLE MBGR (WOOD POST)	TRANSITION RAILING (TYPE WB)	MINOR CONCRETE (MINOR STRUCTURE)	(N) CONCRETE END BLOCK	BURIED POST ANCHOR
						LF	LF	EA	EA	EA	TYPE	LF	LF	LF	LF	EA	CY	EA	EA
37	Col	5	19.7	ATTACH TO Br No. 15-71L (FRESHWATER CREEK), Rt Shld	SB	25.0			1		12B	25.0				1			
38	Col	5	19.3	ATTACH TO Br No. 15-74L (REMOVE PIGPEN) & 15-0073L, Med Shld	SB	200.0	1625.0				12E	200.0			1,625.0	1			
39	Col	5	19.3	ATTACH TO Br No. 15-0073 (SALT CREEK), Rt Shld	SB	200.0			1		12B	200.0				1			
40	Col	5	18.7	ATTACH TO Br No. 15-0024L (NORTH WILLIAMS OH) SB OFF RAMP TO Col 20, Rt Shld	SB	950.0		1			12A	950.0				1	0.6	1	
41	Col	5	18.6	ATTACH TO Br No. 15-0024R (NORTH WILLIAMS OH) Col 20 ON RAMP, Rt Shld	SB	787.5				1	12AA	787.5				1	0.6	1	
42	Col	5	16.6	ATTACH TO Br No. 15-66L (WILLIAMS OH), Rt Shld	SB		925.0		1		12B		300		625.0	1			
43	Col	5	16.6	ATTACH TO Br No. 15-66L (WILLIAMS OH), Med Shld	SB	25.0					12E	25.0				1			
44	Col	5	16.6	WILLIAMS OH, Rt Shld	SB	1170.0		1			12AA	1170.0				1	0.6	1	
45	Col	5	13.4	MBGR SHIELDING A CULVERT, Rt Shld	SB	50.0			1		11B	50.0							
46	Col	5	12.5	ATTACH TO Br No. 15-09L (CORTINA CREEK), Med Shld	SB	25.0					12E	25.0				1			
47	Col	5	12.5	ATTACH TO Br No. 15-09L (CORTINA CREEK), Rt Shld	SB			1			12A					1			
48	Col	5	9.8	ATTACH TO Br No. 15-07L (N. BRANCH SAND CREEK), Med Shld	SB	25.0					12E	25.0				1			
49	Col	5	9.8	ATTACH TO Br No. 15-07L (N. BRANCH SAND CREEK), Rt Shld	SB	200.0			1		12B	200.0				1			
50	Col	5	8.0	ATTACH TO Br No. 15-05L (SALT CREEK), Med Shld	SB	25.0					12E	25.0				1			
51	Col	5	8.0	ATTACH TO Br No. 15-05L (SALT CREEK), Rt Shld	SB	200.0			1		12B	200.0				1			
52	Col	5	7.7	ATTACH TO Br No. 15-62L (NORTH ARBUCKLE UC), Med Shld	SB	25.0					12E	25.0				1			
53	Col	5	7.7	ATTACH TO Br No. 15-62L (NORTH ARBUCKLE UC), Rt Shld	SB	187.5			1		12B	187.5				1			
54	Col	5	7.3	ATTACH TO RETAINING WALL, Rt Shld	SB			1			12A					1			
55	Col	5	6.8	ATTACH TO Br No. 15-47 (HILLGATE Rd OC), Rt Shld	SB	175.0		1			12A	175.0				1			
56	Col	5	4.7	MBGR SHIELDING A CULVERT, Rt Shld	SB	200.0			1	1	11B	200.0							
57	Col	5	3.0	MBGR SHIELDING A CULVERT, Rt Shld	SB		362.5		1	1	11B				362.5				
58	Col	5	2.0	ATTACH TO Br No. 15-64L (PETROLEUM CREEK), Med Shld	SB	25.0					12E	25.0				1			
59	Col	5	2.0	ATTACH TO Br No. 15-64L (PETROLEUM CREEK), Rt Shld	SB	200.0			1		12B	200.0				1			
60	Yol	5	28.6	ATTACH TO Br No. 22-137L (BUCKEYE CREEK), Med Shld	SB	25.0					12E	25.0				1			
61	Yol	5	28.6	ATTACH TO Br No. 22-0137L (BUCKEYE CREEK), Rt Shld	SB	200.0			1		12B	200.0				1			
62	Yol	5	22.6	ATTACH TO Br No. 22-143L (ROUTE 505/5 SEPARATION), Rt Shld	SB				1		12B					1			
63	Yol	5	21.8	ATTACH TO Br No. 22-135L (OAT CREEK), Med Shld	SB	25.0					12E	25.0				1			
64	Yol	5	21.8	ATTACH TO Br No. 22-135L (OAT CREEK), Rt Shld	SB	200.0		1			12A	200.0				1			
SUBTOTAL						5,145.0	2,912.5	6	12	3		5,145.0	300		2,612.5	25	1.8	3	
SUBTOTAL SHEET Q-3						6,337.5		1	24	12		6,037.5	300	300		24	0.6	1	1
TOTAL SHEETS						11,482.5	2,912.5	7	36	15		11,182.5	600	300	2,612.5	49	2.4	4	1

(N)- NOT A SEPARATE PAY ITEM, FOR INFORMATION ONLY

ANA SERRANO — REVISED BY
ANA SERRANO — DATE REVISED
CALCULATED-DESIGNED BY
CHECKED BY
FUNCTIONAL SUPERVISOR: GILBERT OGAZ
STATE OF CALIFORNIA - DEPARTMENT OF TRANSPORTATION
Caltrans®
NORTH REGION
OFFICE OF DESIGN SOUTH
DESIGN BRANCH S2

LAST REVISION 00-00-00
DATE PLOTTED => 13-SEP-2010
TIME PLOTTED => 11:26

SUMMARY OF QUANTITIES
Q-4

Dist	COUNTY	ROUTE	POST MILES TOTAL PROJECT	SHEET No.	TOTAL SHEETS
03	Yol, Col	5	R21.5/R23.8,R27.0/ R28.9,R0.0/R21.0	48	87

Ana Serrano
REGISTERED CIVIL ENGINEER — 5-4-10 DATE

5-10-10
PLANS APPROVAL DATE

REGISTERED PROFESSIONAL ENGINEER — ANA SERRANO No. 65977 Exp 6-30-12 CIVIL — STATE OF CALIFORNIA

THE STATE OF CALIFORNIA OR ITS OFFICERS OR AGENTS SHALL NOT BE RESPONSIBLE FOR THE ACCURACY OR COMPLETENESS OF SCANNED COPIES OF THIS PLAN SHEET.

COLD PLANE ASPHALT CONCRETE PAVEMENT

COUNTY	LOCATION/ DESCRIPTION	DIRECTION	COLD PLANE AC PAVEMENT (.06 Max)	COLD PLANE AC PAVEMENT (.20 Max)	COLD PLANE AC PAVEMENT (.25 Max)
		NB/SB	SQYD	SQYD	SQYD
Yol	PM R21.5 TO R22.8	NB	19,616	866	
Yol	PM R27.0 TO R28.9	NB	28,508	433	
Yol	COUNTY LINE Rd OFF RAMP	NB	1,821		
Col	PM R0.0 TO R21.0	NB	319,411	433	
Col	COUNTY LINE Rd ON RAMP	NB	2,968		
Col	HILLGATE Rd OFF RAMP	NB	2,160		
Col	PUTMAN LATERAL OFF RAMP	NB	1,520		
Col	PUTMAN LATERAL ON RAMP	NB	1,504		
Col	HAHN Rd OFF RAMP	NB	695		
Col	HAHN Rd ON RAMP	NB	709		
Col	HUSTED Rd OFF RAMP	NB	699		
Col	HUSTED Rd ON RAMP	NB	933		
Col	E St OFF RAMP	NB	605		
Col	E St ON RAMP	NB	322		
Col	ROUTE 20 OFF RAMP	NB	728		
Col	ROUTE 20 ON RAMP	NB	1,122		
Yol	PM R21.5 TO R22.8	SB	19,616	866	
Yol	PM R27.0 TO R28.9	SB	28,508	433	
Yol	COUNTY LINE Rd ON RAMP	SB	940		
Col	PM R0.0 TO R21.0	SB	319,869	433	
Col	COUNTY LINE Rd OFF RAMP	SB	857		
Col	HILLGATE Rd ON RAMP	SB	1,441		
Col	HILLGATE Rd OFF RAMP	SB	435		
Col	PUTMAN LATERAL ON RAMP	SB	1,208		
Col	PUTMAN LATERAL OFF RAMP	SB	1,606		
Col	HAHN Rd ON RAMP	SB	952		
Col	HAHN Rd OFF RAMP	SB	1,869		
Col	HUSTED Rd ON RAMP	SB	936		
Col	HUSTED Rd OFF RAMP	SB	769		
Col	E St ON RAMP	SB	697		
Col	E St OFF RAMP	SB	669		
Col	ROUTE 20 ON RAMP	SB	4,734		
Col	ROUTE 20 OFF RAMP	SB	3,493		
Col/Yol	RAMP TAPERS	NB & SB		3,178	
Yol	OAT CREEK	NB & SB		1,733	
Yol	BUCKEYE CREEK Br	NB & SB		1,733	
Col	PETROLEUM CREEK Br	NB & SB		1,733	
Col	HILLGATE Rd UC Br	NB & SB		1,733	
Col	N ARBUCKLE UC Br	NB & SB		1,733	
Col	WILLIAMS OH Br	NB & SB		1,733	
Col	SALT CREEK Br	NB & SB		1,733	
Col	FRESH WATER CREEK Br	NB & SB		1,733	
Yol	ROUTE 505/5 SEPARATION	NB & SB			3,467
Yol	COUNTY LINE Rd OC	NB & SB			3,467
Col	HARRINGTON Ave OC	NB & SB			3,467
Col	GREENBAY Rd OC	NB & SB			3,467
Col	HALL St OC	NB & SB			3,467
Col	HAHN Rd OC	NB & SB			3,467
Col	MEYERS Rd OC	NB & SB			3,467
Col	HUSTED Rd OC	NB & SB			3,467
Col	E St OC	NB & SB			3,467
Col	ROUTE 20/5 SEPARATION	NB & SB			3,467
Col	FRESHWATER Rd OC	NB & SB			3,467
	SUBTOTAL		771,923	20,506	38,137
	TOTAL			830,566	

CONCRETE BARRIER

COUNTY	LOCATION/DESCRIPTION	CONCRETE BARRIER			REMOVE CONCRETE BARRIER		
		TYPE 60	TYPE 60C	TYPE 60E	TYPE 50	TYPE 50C	TYPE 50E
		LF	LF	LF	LF	LF	LF
Col	PM R6.70 TO PM R6.72	103			103		
Col	PM R6.72 TO PM R6.76		254			254	
Col	PM R6.76 TO PM R6.79	93			93		
Col	PM R6.79 TO PM R6.80	58			58		
Col	PM R6.80 TO PM R6.82	125			125		
Col	PM R6.82 TO PM R6.84		114			114	
Col	PM R6.84 TO PM R7.14		1,380			1,380	
Col	PM R7.14 TO PM R7.15			40			40
Col	PM R7.15 TO PM R7.31		752			752	
Col	PM R7.31 TO PM R7.38	390			390		
Col	PM R7.38 TO PM R7.70	1,690			1,690		
	TOTAL	2,459	2,500	40	2,459	2,500	40

LOCATION	TEMPORARY FENCE (TYPE ESA)
	LF
Yol PM R21.5/R23.9	1500
Col PM R0.0/R21.0	

SUMMARY OF QUANTITIES
Q-5

REVISED BY | DATE REVISED
ANA SERRANO | ANA SERRANO
CALCULATED-DESIGNED BY | CHECKED BY
FUNCTIONAL SUPERVISOR: GILBERT OGAZ
STATE OF CALIFORNIA - DEPARTMENT OF TRANSPORTATION
NORTH REGION
OFFICE OF DESIGN SOUTH
DESIGN BRANCH S2
Gutans

LAST REVISION 00-00-00
DATE PLOTTED => 13-SEP-2010
TIME PLOTTED => 11:26

BORDER LAST REVISED 7/1/2010
USERNAME => s128033
DGN FILE => 33c890pa005.dgn
RELATIVE BORDER SCALE IS IN INCHES 0 1 2 3
UNIT 0322
PROJECT NUMBER & PHASE 03000011221

Dist	COUNTY	ROUTE	POST MILES TOTAL PROJECT	SHEET No.	TOTAL SHEETS
03	Yol,Col	5	R21.5/R23.8,R27.0/ R28.9,R0.0/R21.0	49	87

Jaskaran Boparai — REGISTERED ELECT ENGINEER — 5-4-10 DATE

5-10-10
PLANS APPROVAL DATE

JASKARAN S BOPARAI No. E15056 Exp.12-31-11 ELECT — REGISTERED PROFESSIONAL ENGINEER — STATE OF CALIFORNIA

THE STATE OF CALIFORNIA OR ITS OFFICERS OR AGENTS SHALL NOT BE RESPONSIBLE FOR THE ACCURACY OR COMPLETENESS OF SCANNED COPIES OF THIS PLAN SHEET.

PROJECT NOTES (THIS SHEET ONLY)

1. AB EXIST CONDUIT AND CONDUCTORS AS SHOWN.
2. 2-3"C, 10 DLC
3. INSTALL STATE FURNISHED 334 CONTROLLER CABINET, EXACT LOCATION OF INSTALLATION TO BE DETERMINED BY THE ENGINEER
4. MAINTENANCE VEHICLE PULLOUT DETAILS REFER TO CONSTRUCTION DETAILS SHEET.

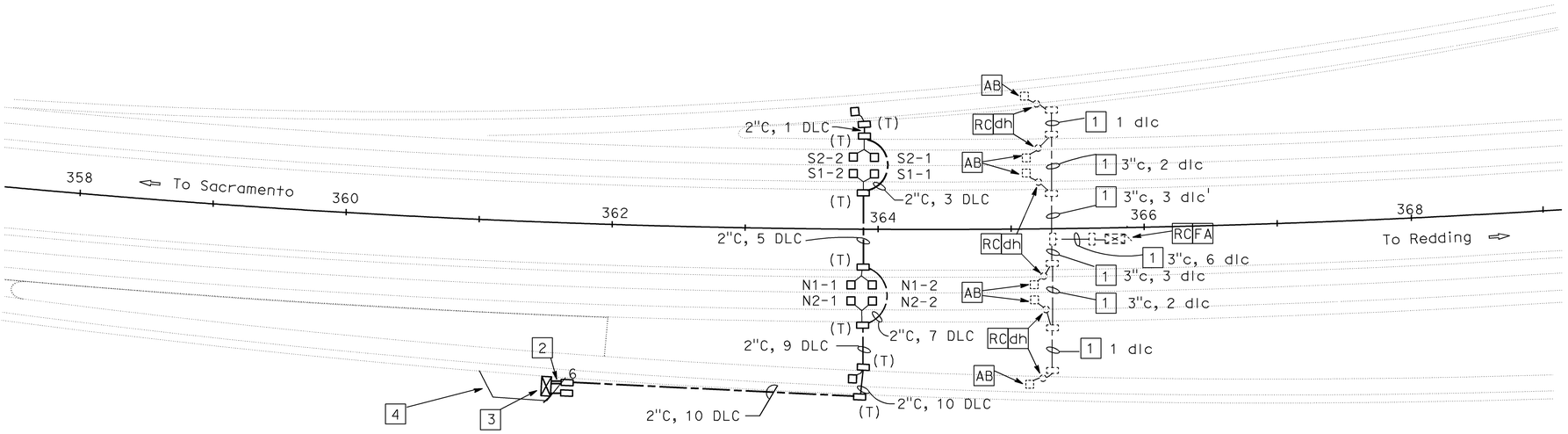

COUNT STATION NO. 082
Col-5, PM 006.58

MODIFY TRAFFIC MONITORING STATION

THIS PLAN ACCURATE FOR ELECTRICAL WORK ONLY

SCALE 1"= 50'

E-1

STATE OF CALIFORNIA - DEPARTMENT OF TRANSPORTATION
OFFICE OF ELECTRICAL DESIGN
SACRAMENTO

FUNCTIONAL SUPERVISOR: NELSON LEE
CALCULATED-DESIGNED BY: JASKARAN S BOPARAI
CHECKED BY: JASKARAN S BOPARAI
REVISED BY
DATE REVISED

LAST REVISION DATE PLOTTED => 13-SEP-2010
TIME PLOTTED => 11:26
04-28-10

BORDER LAST REVISED 7/1/2010
USERNAME => s128033
DGN FILE => 33c890ua001.dgn
RELATIVE BORDER SCALE IS IN INCHES 0 1 2 3
UNIT 0403
PROJECT NUMBER & PHASE 0300011221

NOTE: FOR COMPLETE RIGHT OF WAY AND ACCURATE ACCESS DATA, SEE RIGHT OF WAY RECORD MAPS AT DISTRICT OFFICE.

PROJECT NOTES: (THIS SHEET ONLY)

1. AB 2 PAIRS OF TWISTED LOOP CONDUCTORS, AND 4 stc
2. 2 PAIRS OF TWISTED LOOP CONDUCTORS, AND 4 STC
3. 41c, 2 dlc, RC 4 stc , ADD 4 STC
4. 41c, 2#6, 2 dlc, RC 4 stc, ADD 4 STC
5. AB EXIST 2 PIEZO ELECTRIC AXLE SENSORS AND 1 INDUCTIVE LOOP
6. INSTALL 2 PIEZO ELECTRIC AXLE SENSORS AND 1 INDUCTIVE LOOP
7. 41c, RC 2 pairs of loop conductors, 4 stc, AND ADD 2 PAIRS OF LOOP CONDUCTORS, 4 STC
8. 53c, 2 dlc, RC 4 stc, ADD 4 STC

Dist	COUNTY	ROUTE	POST MILES TOTAL PROJECT	SHEET No.	TOTAL SHEETS
03	Yol,Col	5	R21.5/R23.8,R27.0/ R28.9,R0.0/R21.0	50	87

Jaskaran Boparai 5-4-10
REGISTERED CIVIL ENGINEER DATE

JASKARAN SINGH BOPARAI No. E15056 Exp. 12-31-11 ELECTRICAL — REGISTERED PROFESSIONAL ENGINEER — STATE OF CALIFORNIA

5-10-10
PLANS APPROVAL DATE

THE STATE OF CALIFORNIA OR ITS OFFICERS OR AGENTS SHALL NOT BE RESPONSIBLE FOR THE ACCURACY OR COMPLETENESS OF SCANNED COPIES OF THIS PLAN SHEET.

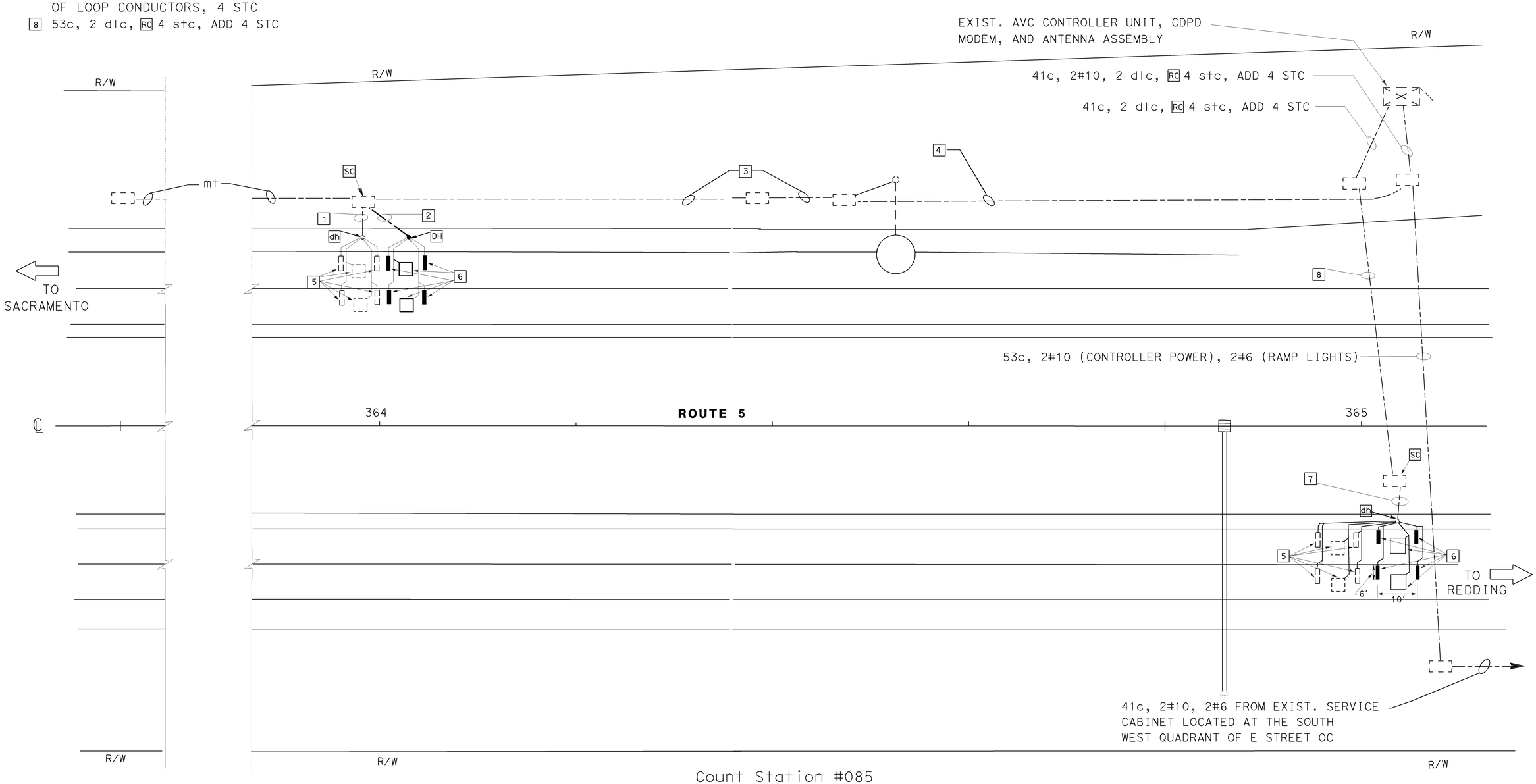

Count Station #085
Col-5, PM 17.975

NOTE : THIS PLAN ACCURATE FOR ELECTRICAL WORK ONLY

MODIFY AUTOMATIC VEHICLE CLASSIFICATION SYSTEM

SCALE 1"=20′

E-2

LAST REVISION DATE PLOTTED => 13-SEP-2010
TIME PLOTTED => 11:26
02-11-10

STATE OF CALIFORNIA - DEPARTMENT OF TRANSPORTATION
Caltrans
OFFICE OF ELECTRICAL DESIGN
SACRAMENTO
FUNCTIONAL SUPERVISOR: JASKARAN SINGH BOPARAI
CALCULATED-DESIGNED BY: J S BOPARAI
CHECKED BY:
REVISED BY
DATE REVISED

BORDER LAST REVISED 7/1/2010
USERNAME => s128033
DGN FILE => 33c890ua002.dgn
RELATIVE BORDER SCALE IS IN INCHES 0 1 2 3
UNIT 0403
PROJECT NUMBER & PHASE 0300011221

DIST	COUNTY	ROUTE	POST MILES TOTAL PROJECT	SHEET NO.	TOTAL SHEETS
03	Yol,Col	5	R21.5/R23.8,R27.0/ R28.9,R0.0/R21.0	51	87

Randell D. Hiatt
REGISTERED CIVIL ENGINEER

June 6, 2008
PLANS APPROVAL DATE

REGISTERED PROFESSIONAL ENGINEER — Randell D. Hiatt — No. C50200 — Exp. 6-30-09 — CIVIL — STATE OF CALIFORNIA

The State of California or its officers or agents shall not be responsible for the accuracy or completeness of electronic copies of this plan sheet.

To accompany plans dated 5-10-10

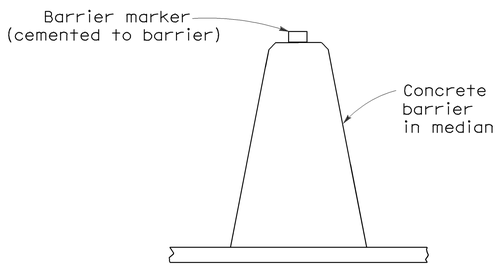

CONCRETE BARRIER TYPE 60 DELINEATION

See Notes 7 and 8

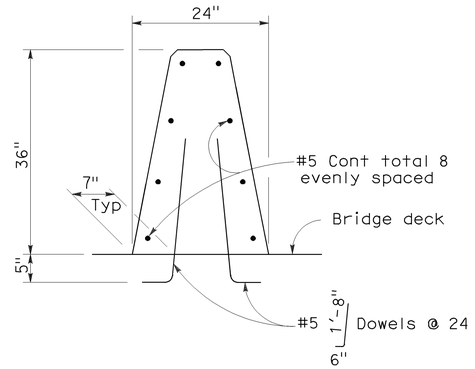

CONCRETE BARRIER TYPE 60A

Details similar to Type 60 except as noted.

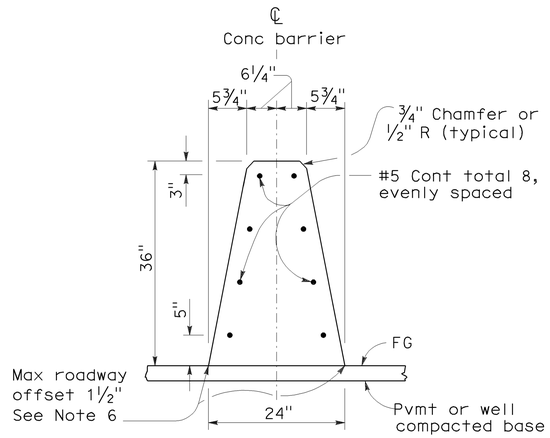

CONCRETE BARRIER TYPE 60

NOTES:

1. See Standard Plan A76B for details of Concrete Barrier Type 60 end anchors, connection to structures and transitions to Concrete Barrier Type 50 and Concrete Barrier Type 60S.
2. See Standard Plan A76C for Concrete Barrier Type 60 transitions at bridge column and sign pedestals.
3. Where glare screen is required on Concrete Barrier Type 60, use Concrete Barrier Type 60G.
4. Where the concrete barrier is added to the face of existing concrete structure, match existing weep holes.
5. Expansion joints in concrete barrier shall be located at all deck, pavement and principal wall joints. Expansion joint filler material shall be the same size as joint or ½" minimum.
6. Where roadway offset is greater than 1½", see Concrete Barrier Type 60C.
7. Barrier delineation to be used when required by the Special Provisions.
8. Spacing of barrier markers to match spacing of raised pavement markers on the adjacent median edgeline pavement delineation.
9. Reinforcing stirrup not required for roadway offsets less than 1'-0".
10. For roadway surfaces offset greater than 1½" to 3", no rebars required. For roadway surfaces offset greater than 3" to 8" use two #4 rebars at 3" above the lower roadway surface. For roadway surfaces offset greater than 8" to 12", use two #4 rebars at 3" above the lower roadway surface and two #4 rebars at 8" above the lower roadway surface. For roadway surfaces offset greater than 12" to 36", use two #4 rebars at 3" above the lower roadway surface and two #4 rebars at every 8" increment vertical spacing above the first two #4 rebars.

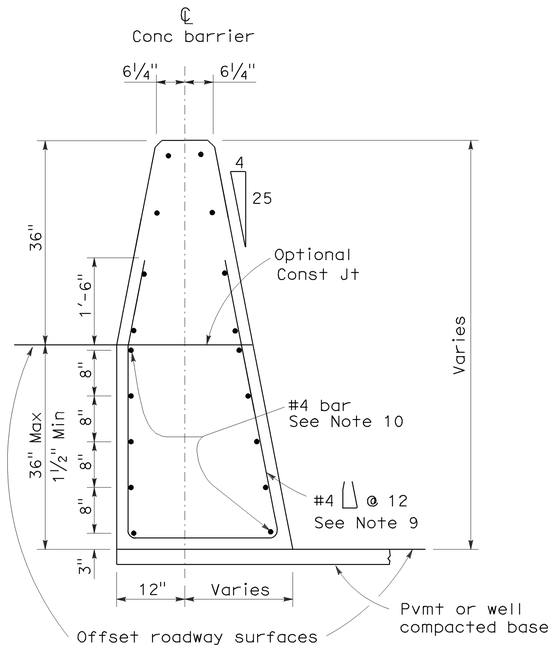

CONCRETE BARRIER TYPE 60C

Details similar to Type 60 except as noted.
Concrete barrier end anchor when necessary.
36" roadway surfaces offset shown.

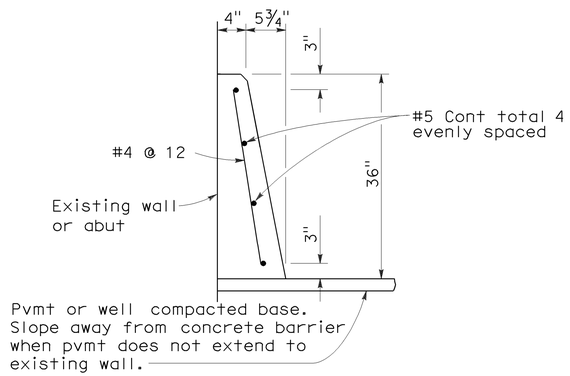

CONCRETE BARRIER TYPE 60D

STATE OF CALIFORNIA
DEPARTMENT OF TRANSPORTATION

CONCRETE BARRIER TYPE 60

NO SCALE

RSP A76A DATED JUNE 6, 2008 SUPERSEDES STANDARD PLAN A76A
DATED MAY 1, 2006 - PAGE 29 OF THE STANDARD PLANS BOOK DATED MAY 2006.

REVISED STANDARD PLAN RSP A76A

2006 REVISED STANDARD PLAN RSP A76A

5-21-08

DIST	COUNTY	ROUTE	POST MILES TOTAL PROJECT	SHEET NO.	TOTAL SHEETS
03	Yol, Col	5	R21.5/R23.8,R27.0/ R28.9,R0.0/R21.0	52	87

Randell D. Hiatt
REGISTERED CIVIL ENGINEER

June 6, 2008
PLANS APPROVAL DATE

REGISTERED PROFESSIONAL ENGINEER
Randell D. Hiatt
No. C50200
Exp. 6-30-09
CIVIL
STATE OF CALIFORNIA

The State of California or its officers or agents shall not be responsible for the accuracy or completeness of electronic copies of this plan sheet.

To accompany plans dated 5-10-10

NOTES:

1. When necessary to place dike in front of face of guard railing, only Type C dike may be used. For dike details, see Standard Plan A87B.
2. For standard railing post embedment, see Standard Plans A77C3.
3. Guard railing delineation to be used where shown on the Project Plans.
4. When dike or curb is placed under guard railing, the maximum height of the dike or curb shall be 4". Mountable dike should not be used. For dike and curb details, see Revised Standard Plans RSP A87A and Standard Plan A87B.
5. For details of typical distance between the face of rail and hinge point, see Standard Plan A77C3.

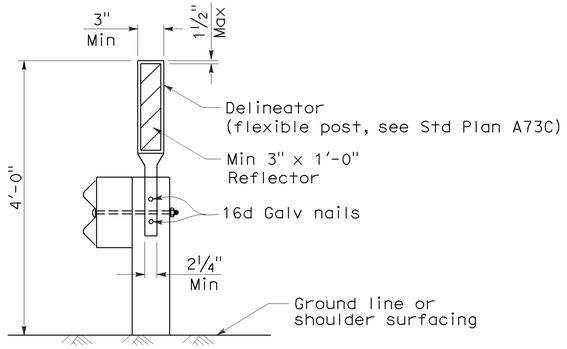

GUARD RAILING DELINEATION

See Note 3

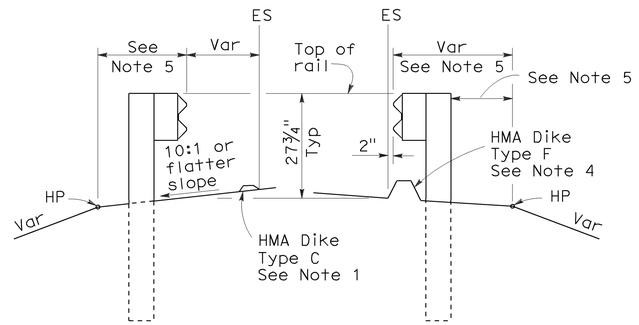

DIKE POSITIONING

See Note 1

STATE OF CALIFORNIA
DEPARTMENT OF TRANSPORTATION

METAL BEAM GUARD RAILING TYPICAL RAILING DELINEATION AND DIKE POSITIONING DETAILS

NO SCALE

RSP A77C4 DATED JUNE 6, 2008 SUPERSEDES STANDARD PLAN A77C4
DATED MAY 1, 2006 - PAGE 47 OF THE STANDARD PLANS BOOK DATED MAY 2006.

REVISED STANDARD PLAN RSP A77C4

2006 REVISED STANDARD PLAN RSP A77C4

12-10-07

DIST	COUNTY	ROUTE	POST MILES TOTAL PROJECT	SHEET NO.	TOTAL SHEETS
03	Yol, Col	5	R21.5/R23.8,R27.0/ R28.9,R0.0/R21.0	53	87

Randell D. Hiatt
REGISTERED CIVIL ENGINEER

June 6, 2008
PLANS APPROVAL DATE

REGISTERED PROFESSIONAL ENGINEER — Randell D. Hiatt — No. C50200 — Exp. 6-30-09 — CIVIL — STATE OF CALIFORNIA

The State of California or its officers or agents shall not be responsible for the accuracy or completeness of electronic copies of this plan sheet.

To accompany plans dated 5-10-10

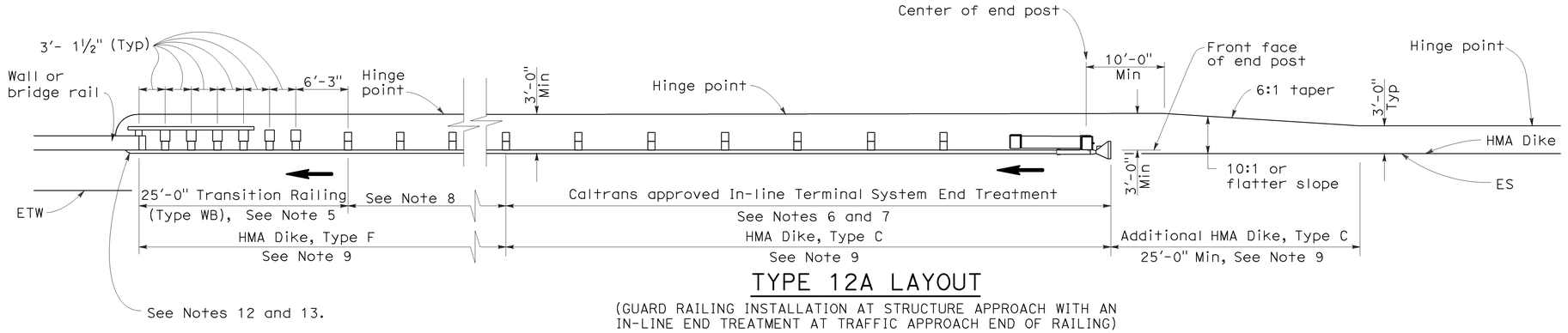

TYPE 12A LAYOUT

(GUARD RAILING INSTALLATION AT STRUCTURE APPROACH WITH AN IN-LINE END TREATMENT AT TRAFFIC APPROACH END OF RAILING)
See Notes 10

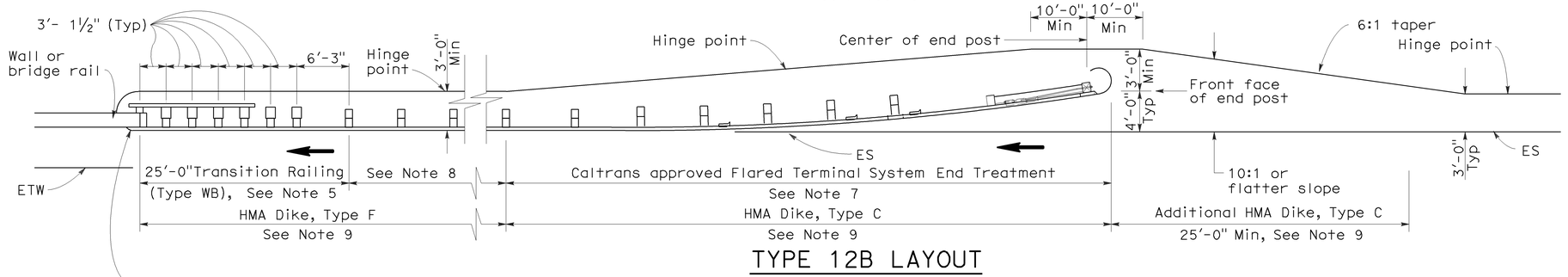

TYPE 12B LAYOUT

(GUARD RAILING INSTALLATION AT STRUCTURE APPROACH WITH A FLARED END TREATMENT AT TRAFFIC APPROACH END OF RAILING)
See Notes 10

NOTES:

1. Line post, blocks and hardware to be used are shown on Standard Plans A77A1, A77A2, A77B1, A77C1 and A77C2.
2. Guard rail post spacing to be 6'-3" center to center, except as otherwise noted.
3. Except as noted, line posts are 6" x 8" x 6'-0" wood with 6" x 8" x 1'-2" wood blocks. W6 x 9 steel posts, 6'-0" in length, with 6" x 8" x 1'-2" notched wood blocks or plastic blocks may be used for 6" x 8" x 6'-0" wood posts with 6" x 8" x 1'-2" wood blocks where applicable and when specified.
4. Direction of adjacent traffic indicated by →.
5. For Transition Railing (Type WB) details for Types 12A and 12B Layouts, see Standard Plan A77J4.
6. In-line Terminal System End Treatments are used where site conditions will not accommodate a flared end treatment.
7. The type of terminal system end treatment to be used will be shown on the Project Plans.
8. Dependent on site conditions (embankment height, side slopes, or other fixed objects), it may be advisable to construct additional guard railing (a length equal to multiples of 12'-6" with 6'-3" post spacing) between the transition railing and end treatment.
9. Where placement of dike is required with guard railing installations, see Revised Standard Plan RSP A77C4 for dike positioning details.
10. Type 12A or Type 12B Layouts are typically used:
    a. To the right of approaching traffic, at the end of a structure, on two-lane conventional highway where the roadbed width across the structure is less than 40 feet.
    b. To the left of approaching traffic, at the end of a structure, on two-lane conventional highway where the roadbed width across the structure is less than 40 feet.
    c. To the right of approaching traffic at the end of each structure on multilane freeways or expressways with separate adjacent or parallel bridges.
    d. To the right of approaching traffic at the end of the structure on multilane freeways or expressways with decked median on the bridge.
11. See Revised Standard Plan RSP A77F3 for typical layout used left of approaching traffic at the ends of each structure on multilane freeways or expressways with separate adjacent or parallel bridges.
12. For additional details of typical connections to bridge rail, see Connection Detail AA on Revised Standard Plans RSP A77J1 and RSP A77J2 and Connection Detail FF on Standard Plans A77K1 and A77K2.
13. For additional details of a typical connection to walls or abutments, see Standard Plan A77J3.

STATE OF CALIFORNIA
DEPARTMENT OF TRANSPORTATION

METAL BEAM GUARD RAILING TYPICAL LAYOUTS FOR STRUCTURE APPROACH

NO SCALE

RSP A77F1 DATED JUNE 6, 2008 SUPERSEDES STANDARD PLAN A77F1
DATED MAY 1, 2006 - PAGE 54 OF THE STANDARD PLANS BOOK DATED MAY 2006.

REVISED STANDARD PLAN RSP A77F1

2006 REVISED STANDARD PLAN RSP A77F1

12-10-07

DIST	COUNTY	ROUTE	POST MILES TOTAL PROJECT	SHEET NO.	TOTAL SHEETS
03	Yol, Col	5	R21.5/R23.8,R27.0/R28.9,R0.0/R21.0	54	87

Randell D. Hiatt
REGISTERED CIVIL ENGINEER

June 6, 2008
PLANS APPROVAL DATE

REGISTERED PROFESSIONAL ENGINEER — Randell D. Hiatt — No. C50200 — Exp. 6-30-09 — CIVIL — STATE OF CALIFORNIA

The State of California or its officers or agents shall not be responsible for the accuracy or completeness of electronic copies of this plan sheet.

To accompany plans dated 5-10-10

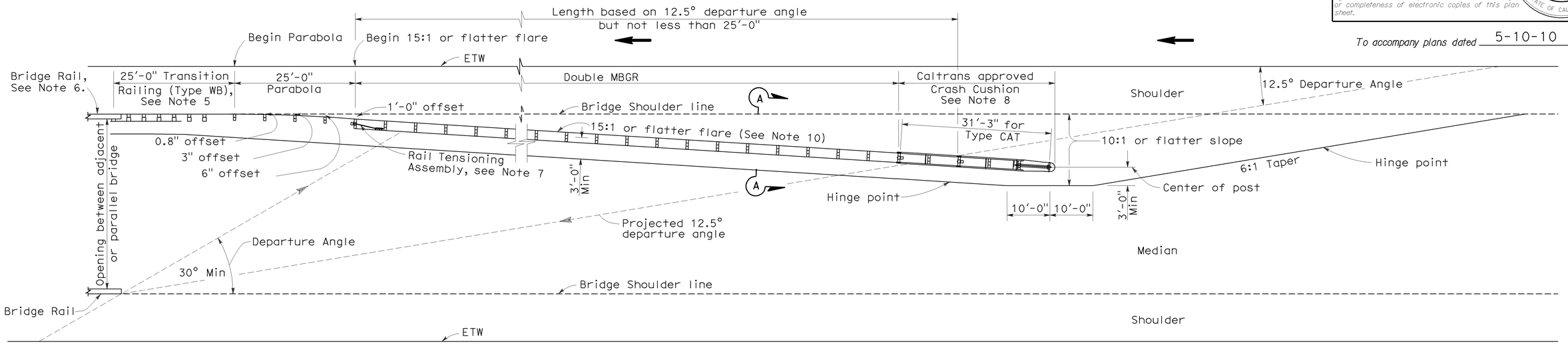

TYPE 12E LAYOUT

See Note 10

5/8" ø Button head bolt with hex nut or 5/8" ø Rod, threaded both ends, with hex nuts. 1/2" Max exposed threads after hex nut(s) tightened. No washer on rail faces for bolted connection to line post.

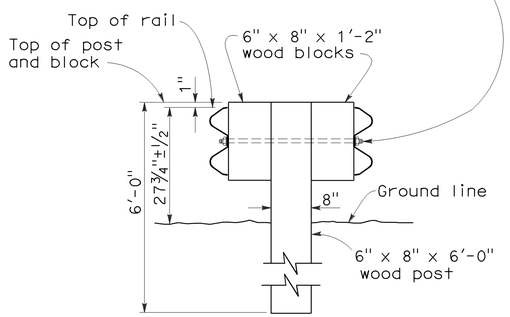

SECTION A-A

TYPICAL DOUBLE METAL BEAM GUARD RAILING

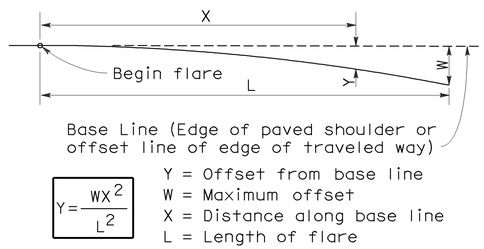

$$Y = \frac{WX^2}{L^2}$$

Y = Offset from base line
W = Maximum offset
X = Distance along base line
L = Length of flare

PARABOLIC FLARE OFFSETS

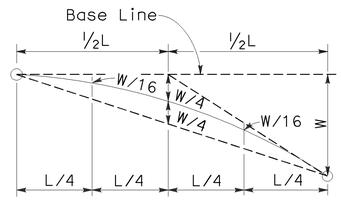

TYPICAL PARABOLIC LAYOUT

NOTES:

1. Line post, blocks and hardware to be used are shown on Standard Plans A77A1, A77A2, A77B1, A77C1 and A77C2.
2. Guard railing post spacing to be 6'-3" center to center, except as otherwise noted.
3. Except as noted, line posts are 6" x 8" x 6'-0" wood with 6" x 8" x 1'-2" wood blocks. W6 x 9 steel posts, 6'-0" in length, with 6" x 8" x 1'-2" notched wood blocks or notched recycled plastic blocks may be used for 6" x 8" x 6'-0" wood line posts with 6" x 8" x 1'-2" wood blocks where applicable and when specified.
4. Direction of adjacent traffic indicated by →.
5. For Transition Railing (Type WB) details, see Standard Plan A77J4.
6. For additional details of a typical connection to bridge rail, see Connection Detail AA on Revised Standard Plan RSP A77J1.
7. For Rail Tensioning Assembly details, see Standard Plan A77H2.
8. The type of Crash Cushion to be used will be shown on the Project Plans.
9. Type 12E Layout is typically used left of approaching traffic at the end of each structure on multilane freeways or expressways where a median type barrier is not constructed between separated roadbeds.
10. The 15:1 or flatter flare is measured off of the edge of traveled way.

STATE OF CALIFORNIA
DEPARTMENT OF TRANSPORTATION

METAL BEAM GUARD RAILING TYPICAL LAYOUTS FOR STRUCTURE APPROACH

NO SCALE

RSP A77F3 DATED JUNE 6, 2008 SUPERSEDES STANDARD PLAN A77F3
DATED MAY 1, 2006 - PAGE 56 OF THE STANDARD PLANS BOOK DATED MAY 2006.

REVISED STANDARD PLAN RSP A77F3

12-10-07

2006 REVISED STANDARD PLAN RSP A77F3

DIST	COUNTY	ROUTE	POST MILES TOTAL PROJECT	SHEET NO.	TOTAL SHEETS
03	Yol, Col	5	R21.5/R23.8,R27.0/R28.9,R0.0/R21.0	55	87

Randell D. Hiatt
REGISTERED CIVIL ENGINEER

June 6, 2008
PLANS APPROVAL DATE

The State of California or its officers or agents shall not be responsible for the accuracy or completeness of electronic copies of this plan sheet.

REGISTERED PROFESSIONAL ENGINEER
Randell D. Hiatt
No. C50200
Exp. 6-30-09
CIVIL
STATE OF CALIFORNIA

To accompany plans dated 5-10-10

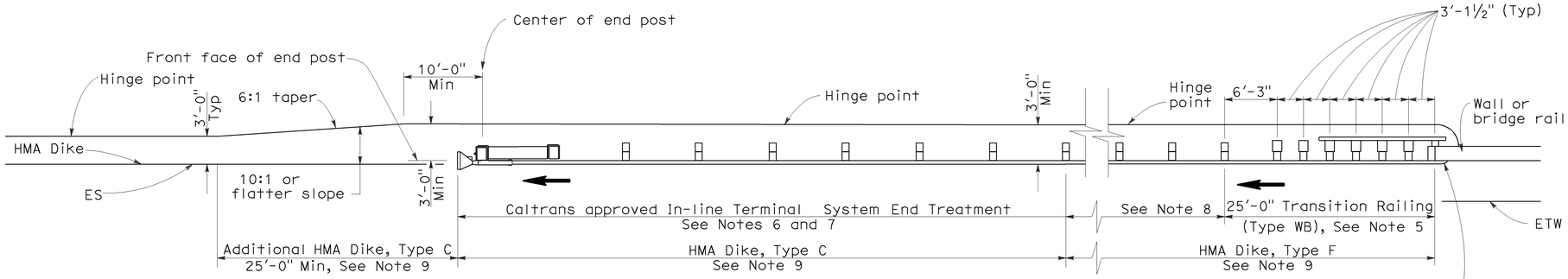

TYPE 12AA LAYOUT

(GUARD RAILING INSTALLATION AT STRUCTURE DEPARTURE WITH AN IN-LINE END TREATMENT AT TRAILING END OF RAILING)
See Notes 9 and 10

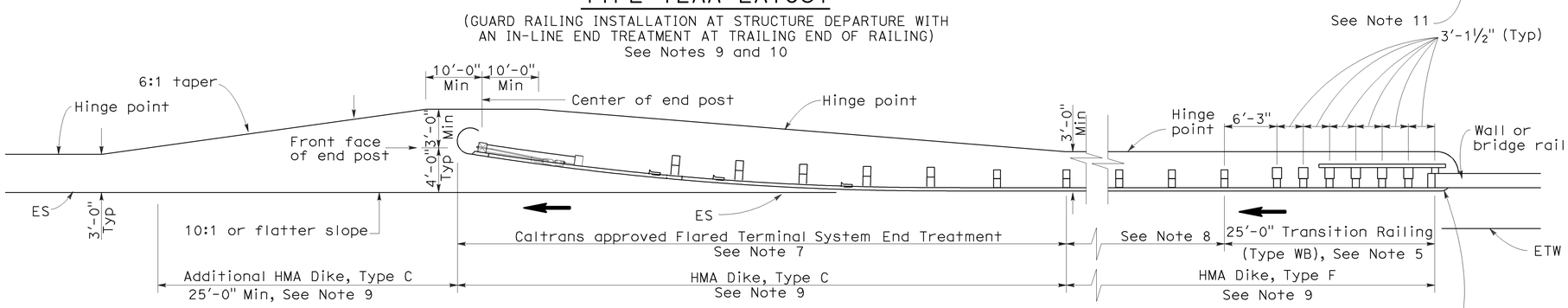

TYPE 12BB LAYOUT

(GUARD RAILING INSTALLATION AT STRUCTURE DEPARTURE WITH A FLARED END TREATMENT AT TRAILING END OF RAILING)
See Notes 9 and 10

NOTES:

1. Line post, blocks and hardware to be used are shown on Standard Plans A77A1, A77A2, A77B1, A77C1 and A77C2.
2. Guard rail post spacing to be 6'-3" center to center, except as otherwise noted.
3. Except as noted, line posts are 6" x 8" x 6'-0" wood with 6" x 8" x 1'-2" wood blocks. W6 x 9 steel posts, 6'-0" in length, with 6" x 8" x 1-2" notched wood blocks or notched recycled plastic blocks may be used for 6" x 8" x 6'-0" wood posts with 6" x 8" x 1'-2" wood blocks where applicable and when specified.
4. Direction of adjacent traffic indicated by ➞.
5. For Transition Railing (Type WB) details for Types 12AA and 12BB Layouts, see Standard Plan A77J4.
6. In-line Terminal System Treatments are used where site conditions will not accommodate a flared end treatment.
7. The type of terminal system to be used will be shown on the Project Plans.
8. Dependent on site conditions (embankment height, side slopes, other fixed objects), it may be advisable to construct additional guard railing (a length equal to multiples of 12'-6" with 6'-3" post spacing) between the transition railing and end treatments.
9. Where placement of dike is required with guard railing installations, see Revised Standard Plan RSP A77C4 for dike positioning details.
10. Type 12AA or Type 12BB Layouts are typically used to the right of traffic departing a structure on two-way conventional highways where the roadbed width across the structure is less than 40 feet.
11. For additional details of typical connections to bridge rail, see Connection Detail CC on Revised Standard Plan RSP A77J2 and Connection Detail HH on Standard Plans A77k2.

STATE OF CALIFORNIA
DEPARTMENT OF TRANSPORTATION

METAL BEAM GUARD RAILING TYPICAL LAYOUTS FOR STRUCTURE DEPARTURE

NO SCALE

RSP A77F4 DATED JUNE 6, 2008 SUPERSEDES STANDARD PLAN A77F4
DATED MAY 1, 2006 - PAGE 57 OF THE STANDARD PLANS BOOK DATED MAY 2006.

REVISED STANDARD PLAN RSP A77F4

2006 REVISED STANDARD PLAN RSP A77F4

12-10-07

DIST	COUNTY	ROUTE	POST MILES TOTAL PROJECT	SHEET NO.	TOTAL SHEETS
03	Yol, Col	5	R21.5/R23.8,R27.0/R28.9,R0.0/R21.0	56	87

Randell D. Hiatt
REGISTERED CIVIL ENGINEER

June 6, 2008
PLANS APPROVAL DATE

REGISTERED PROFESSIONAL ENGINEER — Randell D. Hiatt — No. C50200 — Exp. 6-30-09 — CIVIL — STATE OF CALIFORNIA

The State of California or its officers or agents shall not be responsible for the accuracy or completeness of electronic copies of this plan sheet.

To accompany plans dated 5-10-10

NOTES:

1. Line post, blocks and hardware to be used are shown on Standard Plans A77A1, A77A2, A77B1, A77C1 and A77C2.
2. Guard railing post spacing to be 6'-3" center to center, except as otherwise noted.
3. Except as noted, line posts are 6" x 8" x 6'-0" wood with 6" x 8" x 1'-2" wood blocks. W6 x 9 steel posts, 6'-0" in length, with 6" x 8" x 1'-2" notched wood blocks or notched recycled plastic blocks may be used for 6" x 8" x 6'-0" wood line posts with 6" x 8" x 1'-2" wood blocks where applicable and when specified.
4. A 4'-0" minimum clearance is required between the face of the railing and the face of a fixed object located directly behind standard guard railing sections with post spacing of 6'-3". Construct guard railing as shown in the detail "Strengthened Railing Sections for Fixed Objects" on this plan, where the clearance between the face of the railing and the face of a fixed object is less than 4'-0", but not less than 2'-3". Where the clearance is less than 2'-3", a concrete wall or barrier should be constructed to shield the fixed object(s).
5. Direction of adjacent traffic indicated by ➡.
6. For End Anchor Assembly (Type SFT) details, see Standard Plan A77H1.
7. For details of Rail Tensioning Assembly, see Standard Plan A77H2.
8. The type of crash cushion to be used will be shown on the Project Plans.
9. Type 14A layout is typically used on multilane freeways or expressways to shield fixed objects where a median type barrier is not constructed between the separated roadbeds.
10. For typical flare offsets for 25'-0" length parabola with maximum offset of 1'-0", see Revised Standard Plan RSP A77E1.
11. The 15:1 or flatter flare is measured off of the edge of traveled way.
12. W6 x 15 steel post, 8'-0" in length, with 8" x 8" x 1'-2" notched wood block or notched recycled plastic block may be used in place of the 10" x 10" x 8'-0" wood post with 8" x 8" x 1'-2" wood block shown in the "Strengthened Railing Sections Detail".

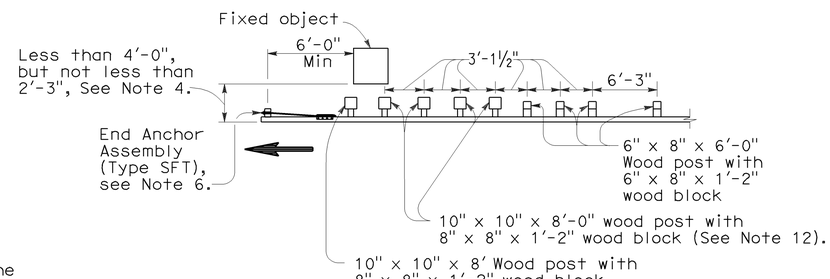

NOTE A: For a series of fixed objects (bridge columns, overhead sign supports, etc.) additional 10" x 10" x 8'-0" wood post with 8" x 8" x 1'-2" wood blocks at 3'-1½" center to center spacing are to be used between fixed objects.

STRENGTHENED RAILING SECTIONS FOR FIXED OBJECT

Use strengthened railing sections with Type 14A layout where minimum clearance between the face of the guard railing and fixed object(s) is less than 4'-0", but not less than 2'-3", See Note 4.

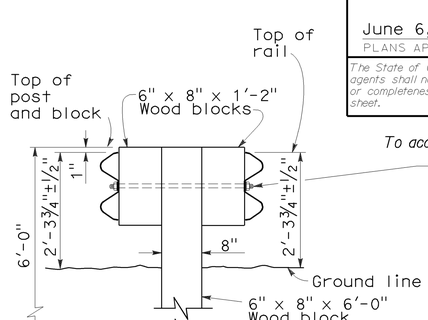

5/8" ø button head bolt with hex nut or 5/8" ø Rod, threaded both ends, with hex nuts. ½" Max exposed threads after hex nut(s) tightened. No washer on rail faces for bolted connection to line post.

SECTION A-A
TYPICAL DOUBLE METAL BEAM GUARD RAILING

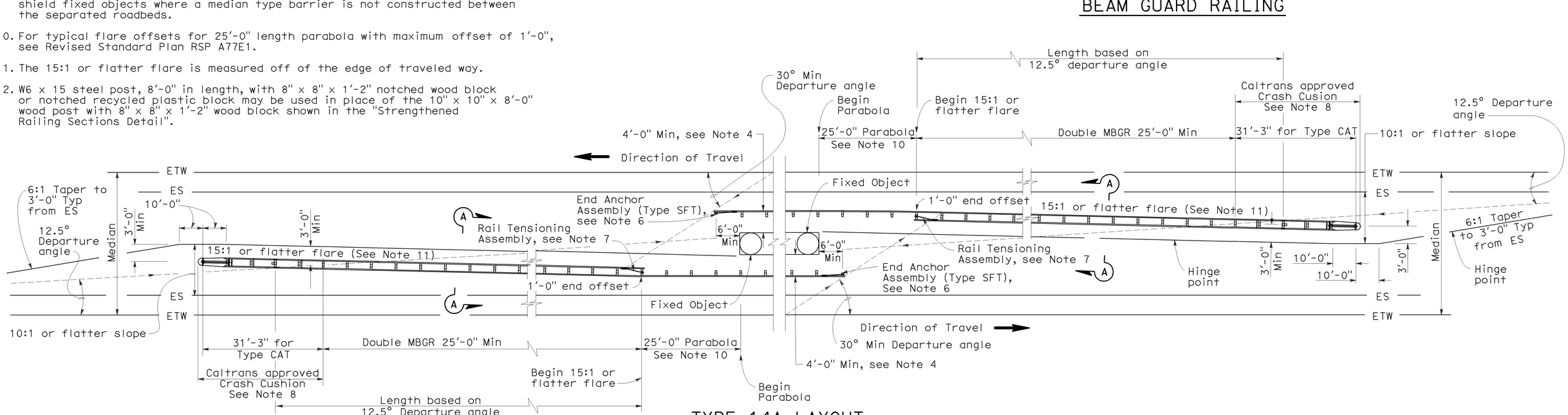

TYPE 14A LAYOUT

See Note 9

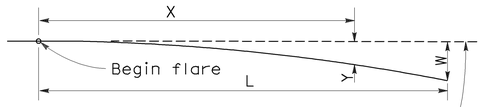

$Y = \frac{WX^2}{L^2}$

Y = Offset from base line
W = Maximum offset
X = Distance along base line
L = Length of flare

PARABOLIC FLARE OFFSETS

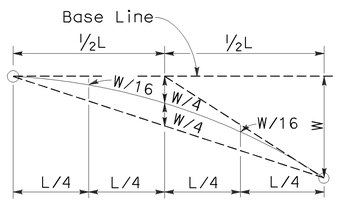

TYPICAL PARABOLIC LAYOUT

STATE OF CALIFORNIA
DEPARTMENT OF TRANSPORTATION

METAL BEAM GUARD RAILING TYPICAL LAYOUTS FOR FIXED OBJECTS BETWEEN SEPARATE ROADBEDS (TWO-WAY TRAFFIC)

NO SCALE

RSP A77G1 DATED JUNE 6, 2008 SUPERSEDES STANDARD PLAN A77G1
DATED MAY 1, 2006 - PAGE 59 OF THE STANDARD PLANS BOOK DATED MAY 2006.

REVISED STANDARD PLAN RSP A77G1

2006 REVISED STANDARD PLAN RSP A77G1

12-10-07

DIST	COUNTY	ROUTE	POST MILES TOTAL PROJECT	SHEET NO.	TOTAL SHEETS
03	Yol, Col	5	R21.5/R23.8,R27.0/ R28.9,R0.0/R21.0	57	87

Randell D. Hiatt
REGISTERED CIVIL ENGINEER

June 6, 2008
PLANS APPROVAL DATE

REGISTERED PROFESSIONAL ENGINEER — Randell D. Hiatt — No. C50200 — Exp. 6-30-09 — CIVIL — STATE OF CALIFORNIA

The State of California or its officers or agents shall not be responsible for the accuracy or completeness of electronic copies of this plan sheet.

To accompany plans dated 5-10-10

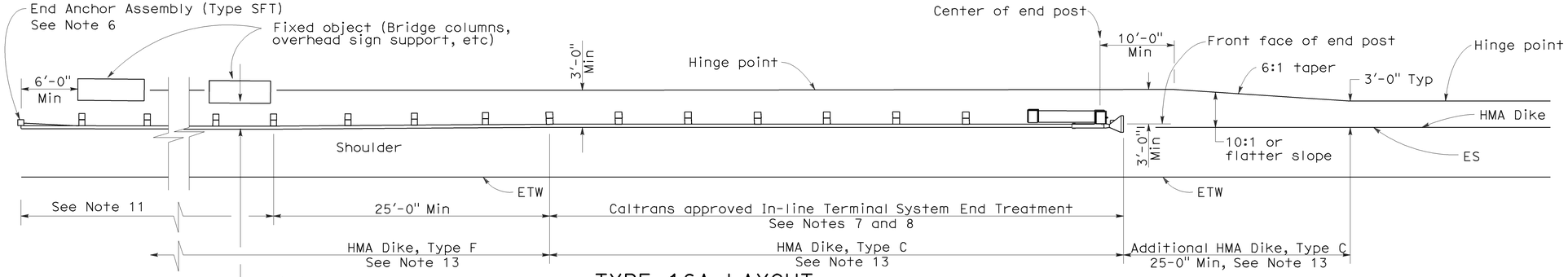

TYPE 16A LAYOUT

(GUARD RAILING INSTALLATION AT ROADSIDE FIXED OBJECT OR OBJECTS WITH AN IN-LINE END TREATMENT AT TRAFFIC APPROACH END OF RAILING)
See Notes 12 and 13

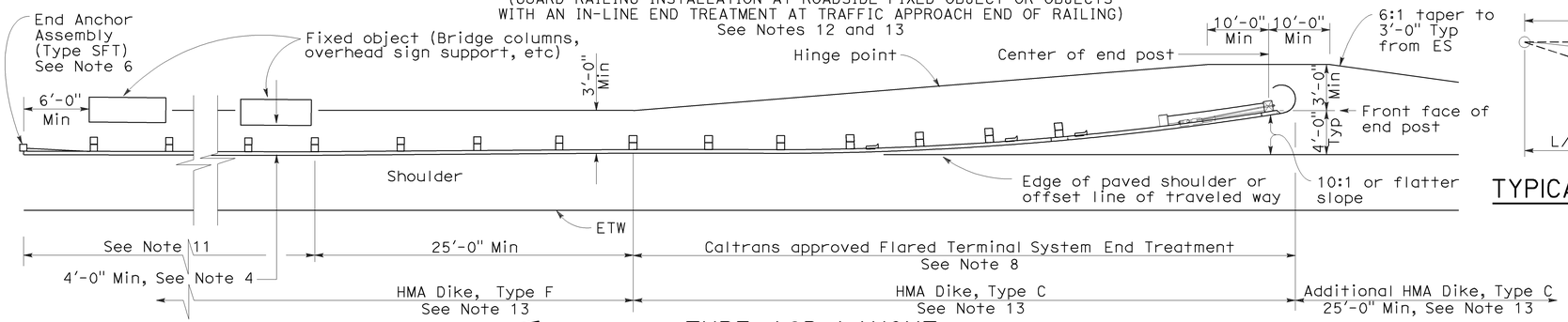

TYPE 16B LAYOUT

(GUARD RAILING INSTALLATION AT ROADSIDE FIXED OBJECT OR OBJECTS WITH A FLARED END TREATMENT AT TRAFFIC APPROACH END OF RAILING)
See Notes 12 and 13

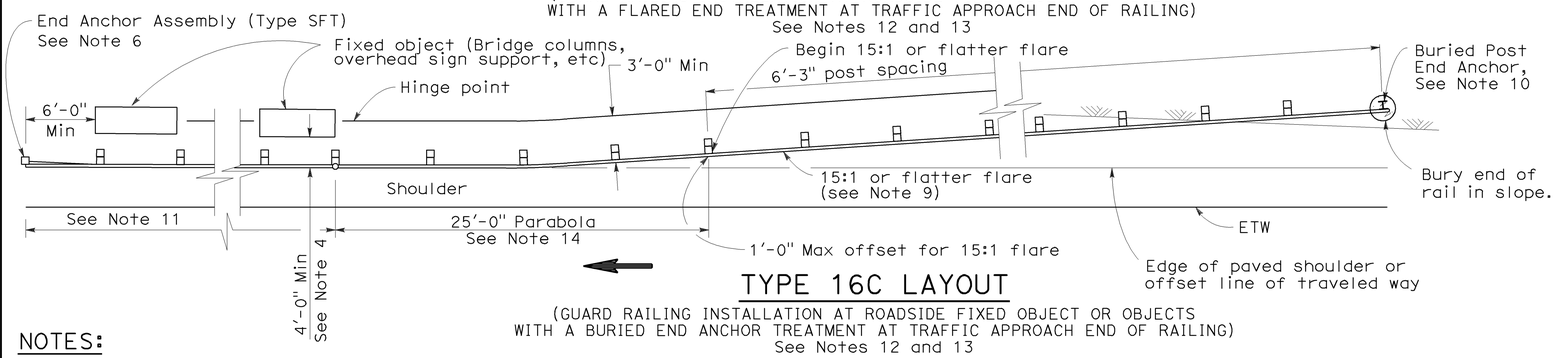

TYPE 16C LAYOUT

(GUARD RAILING INSTALLATION AT ROADSIDE FIXED OBJECT OR OBJECTS WITH A BURIED END ANCHOR TREATMENT AT TRAFFIC APPROACH END OF RAILING)
See Notes 12 and 13

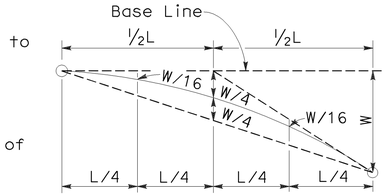

TYPICAL PARABOLIC LAYOUT

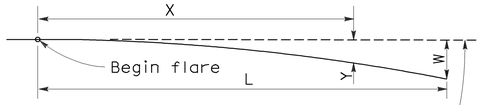

Base Line (Edge of paved shoulder or offset line of edge of traveled way)

$$Y = \frac{WX^2}{L^2}$$

Y = Offset from base line
W = Maximum offset
X = Distance along base line
L = Length of flare

PARABOLIC FLARE OFFSETS

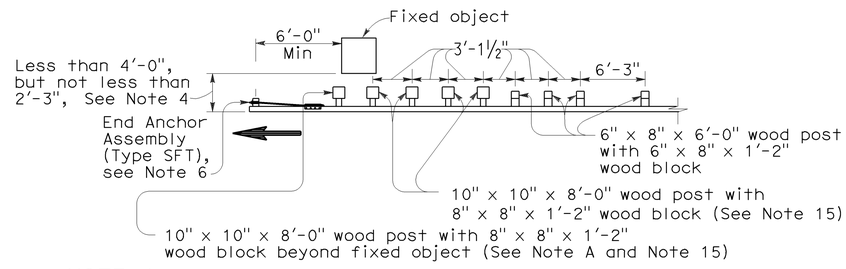

NOTE A: For a series of fixed objects (bridge columns, overhead sign supports, etc.) additional 10" x 10" x 8'-0" wood post with 8" x 8" x 1'-2" wood blocks at 3'-1½" center to center spacing are to be used between fixed objects.

STRENGTHENED RAILING SECTIONS FOR FIXED OBJECT

Use strengthened railing sections with Types 16A, 16B or 16C Layouts where minimum clearance between the face of the guard railing and fixed object(s) is less than 4'-0", but not less than 2'-3". See Note 4

NOTES:

1. Line post, blocks and hardware to be used are shown on Revised Standard Plans A77A1, A77A2, A77B1, A77C1 and A77C2.
2. Guard railing post spacing to be 6'-3" center to center, except as otherwise noted.
3. Except as noted, line posts are 6" x 8" x 6'-0" wood with 6" x 8" x 1'-2" wood blocks. W6 x 9 steel posts, 6'-0" in length, with 6" x 8" x 1'-2" notched wood blocks or notched recycled plastic blocks may be used for 6" x 8" x 6'-0" wood line posts with 6" x 8" x 1'-2" wood blocks where applicable and when specified.
4. A 4'-0" minimum clearance is required between the face of the railing and the face of a fixed object located directly behind standard guard railing sections with post spacing of 6'-3". Construct guard railing as shown in the detail "Strengthened Railing Sections for Fixed Objects" on this plan, where the clearance between the face of the railing and the face of a fixed object is less than 4'-0", but not less than 2'-3". Where the clearance is less than 2'-3", a concrete wall or barrier should be constructed to shield the fixed object(s).
5. Direction of adjacent traffic indicated by ⟶.
6. For End Anchor Assembly (Type SFT) details, see Standard Plan A77H1.
7. In-line Terminal System End Treatments are used where site conditions will not accommodate a flared end treatment.
8. The type of terminal system to be used will be shown on the Project Plans.
9. The 15:1 or flatter flare used with Type 16C Layout is based on the edge of the paved shoulder or offset line of edge of the traveled way. The length of guard railing within the 15:1 or flatter flare is based on site conditions and should be a length equal to multiples of 12'-6".
10. For details of the Buried Post End Anchor used with Type 16C Layout, see Standard Plan A77I2.
11. As site conditions dictate, construct additional guard railing to shield fixed object(s). Additional guard railing length equal to multiples of 12'-6". Post spacing at 6'-3" except as specified in Note 4.
12. Layout Types 16A, 16B or 16C are typically used where guard railing is recommended to shield roadside fixed object(s) and a crashworthy end treatment is required for only one direction of traffic.
13. Where placement of dike is required with guard railing, see Revised Standard Plan RSP A77C4 for dike positioning details.
14. For typical flare offsets for 25'-0" length parabola with maximum offset of 1'-0", see Revised Standard Plan RSP A77E1.
15. W6 x 15 steel post, 8'-0" in length, with 8" x 8" x 1'-2" notched wood block or notched recycled plastic blocks may be used in place of the 10" x 10" x 8'-0" wood post with 8" x 8" x 1'-2" wood block shown in the "Strengthened Railing Sections Detail".

STATE OF CALIFORNIA
DEPARTMENT OF TRANSPORTATION

METAL BEAM GUARD RAILING TYPICAL LAYOUTS FOR ROADSIDE FIXED OBJECTS

NO SCALE

RSP A77G3 DATED JUNE 6, 2008 SUPERSEDES STANDARD PLAN A77G3 DATED MAY 1, 2006 - PAGE 61 OF THE STANDARD PLANS BOOK DATED MAY 2006.

REVISED STANDARD PLAN RSP A77G3

2006 REVISED STANDARD PLAN RSP A77G3

12-10-07

DIST	COUNTY	ROUTE	POST MILES TOTAL PROJECT	SHEET NO.	TOTAL SHEETS
03	Yol, Col	5	R21.5/R23.8,R27.0/ R28.9,R0.0/R21.0	58	87

Randell D. Hiatt
REGISTERED CIVIL ENGINEER

June 6, 2008
PLANS APPROVAL DATE

REGISTERED PROFESSIONAL ENGINEER — Randell D. Hiatt — No. C50200 — Exp. 6-30-09 — CIVIL — STATE OF CALIFORNIA

The State of California or its officers or agents shall not be responsible for the accuracy or completeness of electronic copies of this plan sheet.

To accompany plans dated 5-10-10

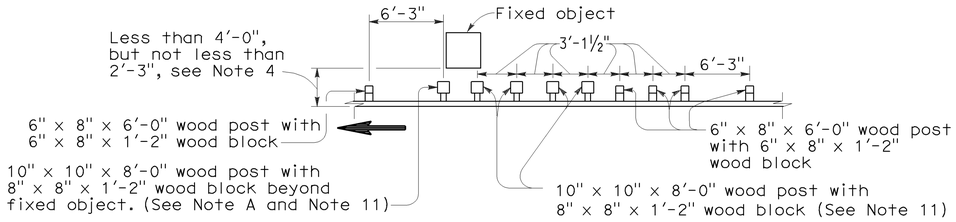

NOTE A: For a series of fixed objects (bridge columns, overhead sign supports, etc.) additional 10" x 10" x 8'-0" wood post with 8" x 8" x 1'-2" wood blocks at 3'-1½" center to center spacing are to be used between fixed object(s).

STRENGTHENED RAILING SECTIONS FOR FIXED OBJECT

Use strengthened railing sections with Layout Types 16D or 16E where minimum clearance between the guard railing and fixed object(s) is less than 4'-0", but not less than 2'-3". See Note 4.

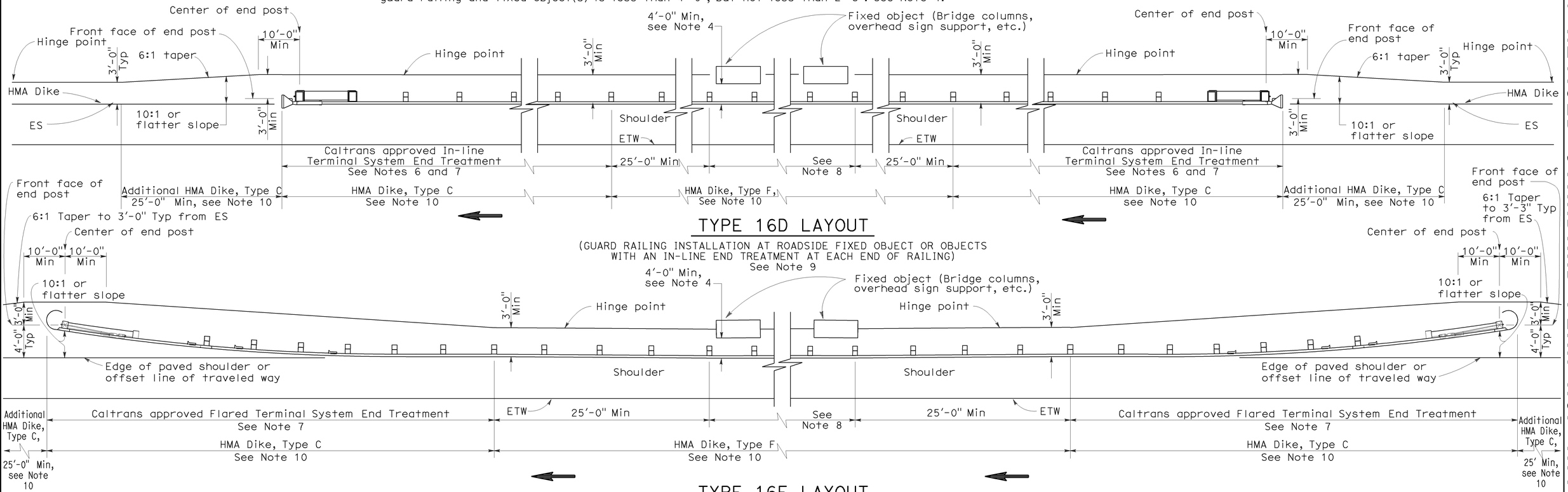

TYPE 16D LAYOUT

(GUARD RAILING INSTALLATION AT ROADSIDE FIXED OBJECT OR OBJECTS WITH AN IN-LINE END TREATMENT AT EACH END OF RAILING) See Note 9

TYPE 16E LAYOUT

(GUARD RAILING INSTALLATION AT ROADSIDE FIXED OBJECT OR OBJECTS WITH A FLARED END TREATMENT AT EACH END OF RAILING) See Note 9

NOTES:

1. Line post, blocks and hardware to be used are shown on Standard Plans A77A1, A77A2, A77B1, A77C1 and A77C2.
2. Guard railing post spacing to be 6'-3" center to center, except as otherwise noted.
3. Except as noted, line posts are 6" x 8" x 6'-0" wood with 6" x 8" x 1'-2" wood blocks. W6 x 9 steel posts, 6'-0" in length, with 6" x 8" x 1'-2" notched wood blocks or notched recycled plastic blocks may be used for 6" x 8" x 6'-0" wood line posts with 6" x 8" x 1'-2" wood blocks where applicable and when specified.
4. A 4'-0" minimum clearance is required between the face of the railing and the face of a fixed object located directly behind standard guard railing sections with post spacing at 6'-3". Construct guard railing as shown in the detail "Strengthened Railing Sections for Fixed Objects" on this plan, where the clearance between the face of the railing and the face of a fixed object is less than 4'-0", but not less than 2'-3". Where the clearance is less than 2'-3", a concrete wall or barrier should be constructed to shield the fixed object(s).
5. Direction of adjacent traffic indicated by ⟶.
6. In-line Terminal System End Treatments are used where site conditions will not accommodate a flared end treatment.
7. The type of terminal system to be used will be shown on the Project Plans.
8. As site conditions dictate, construct additional guard railing to shield fixed object(s). Additional guard railing length equal to multiples of 12'-6". Post spacing at 6'-3", except as specified in Note 4.
9. Layout Types 16D through 16L, shown on the A77G Series of Revised Standard Plans, are typically used where guard railing is recommended to shield roadside fixed object(s) and a crashworthy end treatment is required for both directions of traffic.
10. Where placement of dike is required with guard railing, see Revised Standard Plan RSP A77C4 for dike positioning details.
11. W6 x 15 steel post, 8'-0" in length, with 8" x 8" x 1'-2" notched wood block or notched recycled plastic block may be used in place of the 10" x 10" x 8'-0" wood post with 8" x 8" x 1'-2" wood block shown in the "Strengthened Railing Sections Detail."

STATE OF CALIFORNIA
DEPARTMENT OF TRANSPORTATION

METAL BEAM GUARD RAILING TYPICAL LAYOUTS FOR ROADSIDE FIXED OBJECTS

NO SCALE

RSP A77G4 DATED JUNE 6, 2008 SUPERSEDES STANDARD PLAN A77G4
DATED MAY 1, 2006 - PAGE 62 OF THE STANDARD PLANS BOOK DATED MAY 2006.

REVISED STANDARD PLAN RSP A77G4

12-10-07

2006 REVISED STANDARD PLAN RSP A77G4

DIST	COUNTY	ROUTE	POST MILES TOTAL PROJECT	SHEET NO.	TOTAL SHEETS
03	Yol, Col	5	R21.5/R23.8,R27.0/R28.9,R0.0/R21.0	59	87

Randell D. Hiatt
REGISTERED CIVIL ENGINEER

June 6, 2008
PLANS APPROVAL DATE

REGISTERED PROFESSIONAL ENGINEER — Randell D. Hiatt — No. C50200 — Exp. 6-30-09 — CIVIL — STATE OF CALIFORNIA

The State of California or its officers or agents shall not be responsible for the accuracy or completeness of electronic copies of this plan sheet.

To accompany plans dated 5-10-10

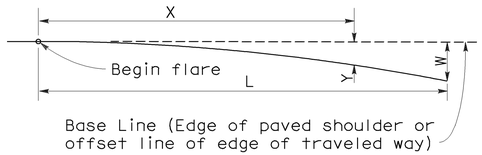

PARABOLIC FLARE OFFSETS

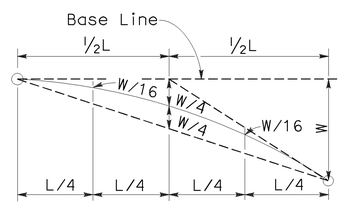

TYPICAL PARABOLIC LAYOUT

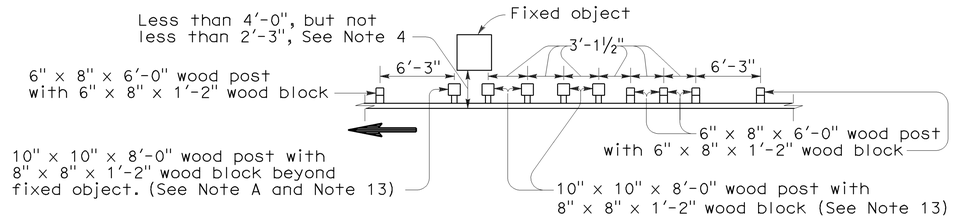

NOTE A: For a series of fixed objects (bridge columns, overhead sign supports, etc.) additional 10" x 10" x 8'-0" wood post with 8" x 8" x 1'-2" wood blocks at 3'-1½" center to center spacing are to be used between fixed object(s).

STRENGTHENED RAILING SECTIONS FOR FIXED OBJECT

Use strengthened railing sections with Layout Types 16F or 16G where minimum clearance between the face of the guard railing and fixed object(s) is less than 4'-0", but not less than 2'-3". See Note 4.

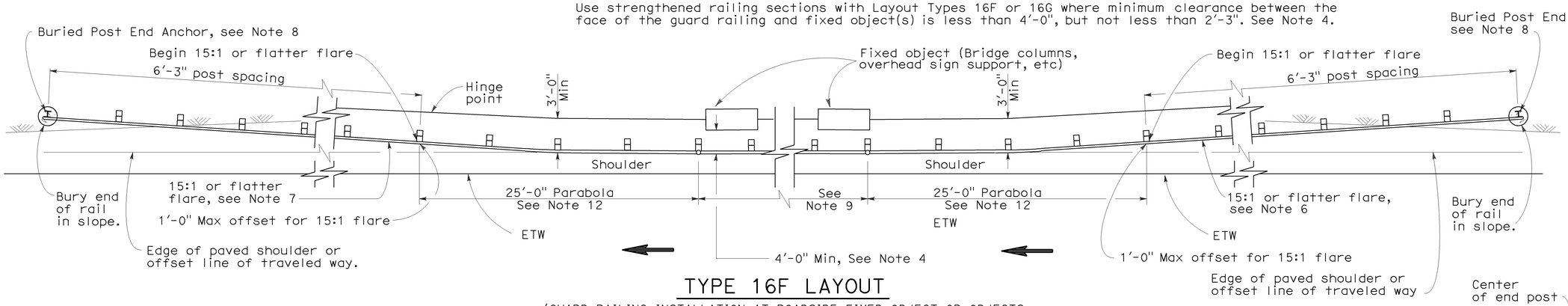

TYPE 16F LAYOUT

(GUARD RAILING INSTALLATION AT ROADSIDE FIXED OBJECT OR OBJECTS WITH A BURIED END ANCHOR TREATMENT AT EACH END OF RAILING)
See Notes 10 and 11

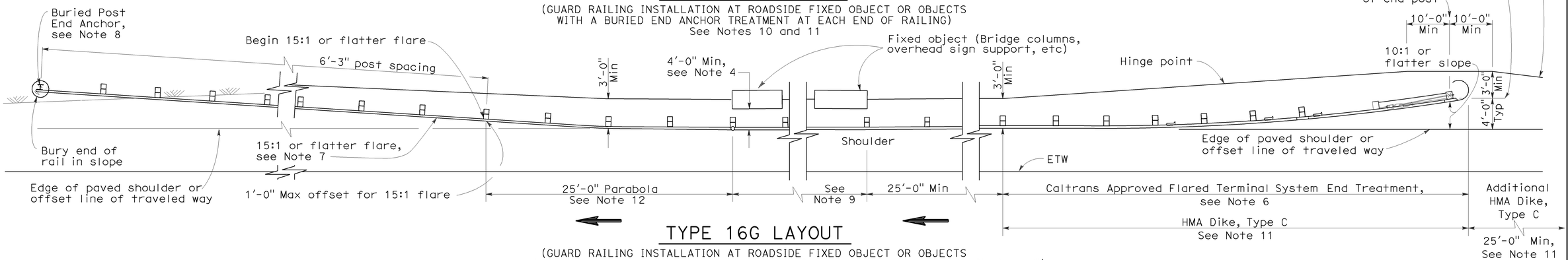

TYPE 16G LAYOUT

(GUARD RAILING INSTALLATION AT ROADSIDE FIXED OBJECT OR OBJECTS WITH A FLARED END TREATMENT AND A BURIED END ANCHOR TREATMENT AT THE ENDS OF RAILING)
See Notes 10 and 11

NOTES:

1. Line post, blocks and hardware to be used are shown on Standard Plans A77A1, A77A2, A77B1, A77C1 and A77C2.
2. Guard railing post spacing to be 6'-3" center to center, except as otherwise noted.
3. Except as noted, line posts are 6" x 8" x 6'-0" wood with 6" x 8" x 1'-2" wood blocks. W6 x 9 steel posts, 6'-0" in length, with 8" x 8" x 1'-2" notched wood blocks or notched recycled plastic blocks may be used for 6" x 8" x 6'-0" wood posts with 6" x 8" x 1'-2" wood blocks where applicable and when specified.
4. A 4'-0" minimum clearance is required between the face of the railing and the face of a fixed object located directly behind standard guard railing sections with post spacing at 6'-3". Construct guard railing as shown in the detail "Strengthened Railing Sections for Fixed Objects" on this plan, where the clearance between the face of the railing and the face of a fixed object is less than 4'-0", but not less than 2'-3". Where the clearance is less than 2'-3", a concrete wall or barrier should be constructed to shield the fixed object(s).
5. Direction of adjacent traffic indicated by ⟶.
6. The type of terminal system to be used will be shown on the Project Plans.
7. The 15:1 or flatter flare for the buried post anchor is based on the edge of the paved shoulder or offset line of edge of the traveled way. The length of guard railing within the 15:1 or flatter flare is based on site conditions and should be a length equal to multiples of 12'-6".
8. For details of the Buried Post End Anchor details, see Standard Plan A77I2.
9. As site conditions dictate, construct additional guard railing to shield fixed object(s). Additional guard railing length equal to multiples of 12'-6". Post spacing at 6'-3", except as specified in Note 4.
10. Layout Types 16D through 16L, shown on the A77G Series of Revised Standard Plans, are typically used on highways where guard railing is recommended to shield roadside fixed object(s) and a crashworthy end treatment is required for both directions of traffic.
11. Where placement of dike is required with guard railing, see Revised Standard Plan RSP A77C4 for dike positioning details.
12. For typical flare offsets for 25'-0" length parabola with maximum offset of 1'-0", see Revised Standard Plan RSP A77E1.
13. W6 x 15 steel post, 8'-0" in length, with 8" x 8" x 1'-2" notched wood block or notched recycled plastic blocks may be used in place of the 10" x 10" x 8'-0" wood post with 8" x 8" x 1'-2" wood block shown in the "Strengthened Railing Sections Detail".

STATE OF CALIFORNIA
DEPARTMENT OF TRANSPORTATION

METAL BEAM GUARD RAILING TYPICAL LAYOUTS FOR ROADSIDE FIXED OBJECTS

NO SCALE

RSP A77G5 DATED JUNE 6, 2008 SUPERSEDES STANDARD PLAN A77G5
DATED MAY 1, 2006 - PAGE 63 OF THE STANDARD PLANS BOOK DATED MAY 2006.

REVISED STANDARD PLAN RSP A77G5

2006 REVISED STANDARD PLAN RSP A77G5

12-10-07

DIST	COUNTY	ROUTE	POST MILES TOTAL PROJECT	SHEET NO.	TOTAL SHEETS
03	Yol, Col	5	R21.5/R23.8,R27.0/ R28.9,R0.0/R21.0	60	87

Randell D. Hiatt
REGISTERED CIVIL ENGINEER

June 6, 2008
PLANS APPROVAL DATE

REGISTERED PROFESSIONAL ENGINEER — Randell D. Hiatt — No. C50200 — Exp. 6-30-09 — CIVIL — STATE OF CALIFORNIA

The State of California or its officers or agents shall not be responsible for the accuracy or completeness of electronic copies of this plan sheet.

To accompany plans dated 5-10-10

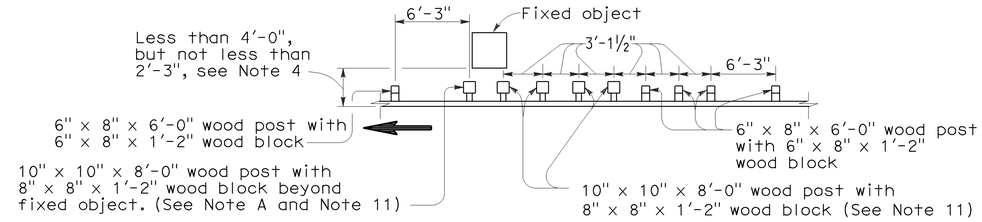

Note A. For a series of fixed objects (bridge columns, overhead sign supports, etc.) additional 10" x 10" x 8'-0" wood post with 8" x 8" x 1'-2" wood blocks at 3'-1½" center to center spacing are to be used between fixed object(s).

STRENGTHENED RAILING SECTIONS FOR FIXED OBJECT

Use strengthened railing sections with Layout Type 16H where minimum clearance between the face of the guard railing and fixed object(s) is less than 4'-0", but not less than 2'-3". See Note 4.

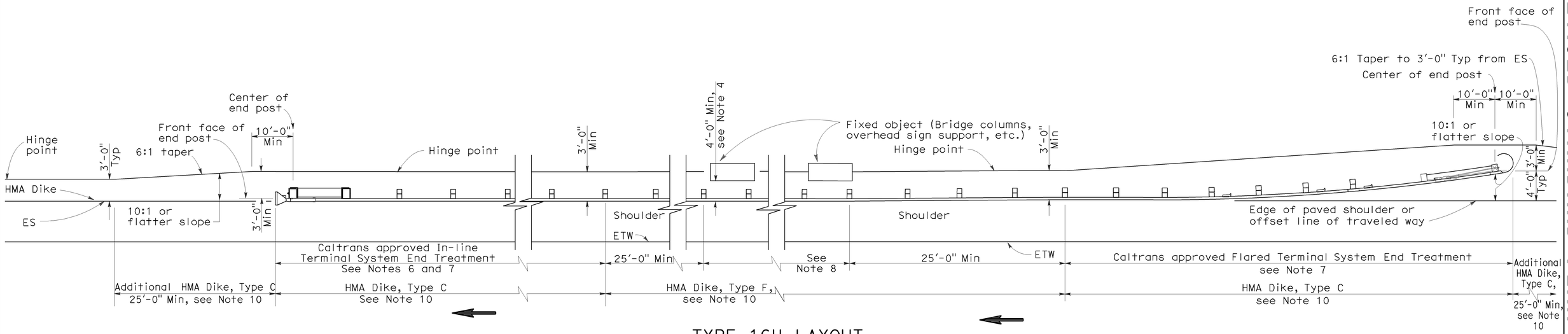

TYPE 16H LAYOUT

(GUARD RAILING INSTALLATION AT ROADSIDE FIXED OBJECT OR OBJECTS WITH A FLARED END TREATMENT AND AN IN-LINE TREATMENT AT THE ENDS OF RAILING)
See Note 9

NOTES:

1. Line post, blocks and hardware to be used are shown on Standard Plans A77A1, A77A2, A77B1, A77C1 and A77C2.
2. Guard railing post spacing to be 6'-3" center to center, except as otherwise noted.
3. Except as noted, line posts are 6" x 8" x 6'-0" wood with 6" x 8" x 1'-2" wood blocks. W6 x 9 steel posts, 6'-0" in length, with 6" x 8" x 1'-2" notched wood blocks or notched recycled plastic blocks may be used for 6" x 8" x 6'-0" wood posts with 6" x 8" x 1'-2" wood blocks where applicable and when specified.
4. A 4'-0" minimum clearance is required between the face of the railing and the face of a fixed object located directly behind standard guard railing sections with post spacing at 6'-3". Construct guard railing as shown in the detail "Strengthened Railing Sections for Fixed Objects" on this plan, where the clearance between the face of the railing and the face of a fixed object is less than 4'-0", but not less than 2'-3". Where the clearance is less than 2'-3", a concrete wall or barrier should be constructed to shield the fixed object(s).
5. Direction of adjacent traffic indicated by → .
6. In-line Terminal System End Treatments are used where site conditions will not accommodate a flared end treatment.
7. The type of terminal system to be used will be shown on the Project Plans.
8. As site conditions dictate, construct additional guard railing to shield fixed object(s). Additional guard railing length equal to multiples of 12'-6". Post spacing at 6'-3", except as specified in Note 4.
9. Layout Types 16D through 16L, shown on the A77G Series of Revised Standard PLans, typically used where guard railing is recommended to shield roadside fixed object(s) and a crashworthy end treatment is required for both directions of traffic.
10. Where placement of dike is required with guard railing, see Revised Standard Plan RSP A77C4 for dike positioning details.
11. W6 x 15 steel post, 8'-0" in length, with 8" x 8" x 1'-2" notched wood block or notched recycled plastic blocks may be used in place of the 10" x 10" x 8'-0" wood post with 8" x 8" x 1'-2" wood block shown in the "Strengthened Railing Sections Detail".

STATE OF CALIFORNIA
DEPARTMENT OF TRANSPORTATION

METAL BEAM GUARD RAILING TYPICAL LAYOUTS FOR ROADSIDE FIXED OBJECTS

NO SCALE

RSP A77G6 DATED JUNE 6, 2008 SUPERSEDES STANDARD PLAN A77G6 DATED MAY 1, 2006 - PAGE 64 OF THE STANDARD PLANS BOOK DATED MAY 2006.

REVISED STANDARD PLAN RSP A77G6

2006 REVISED STANDARD PLAN RSP A77G6

12-10-07

DIST	COUNTY	ROUTE	POST MILES TOTAL PROJECT	SHEET NO.	TOTAL SHEETS
03	Yol, Col	5	R21.5/R23.8,R27.0/R28.9,R0.0/R21.0	61	87

Randell D. Hiatt
REGISTERED CIVIL ENGINEER

June 6, 2008
PLANS APPROVAL DATE

REGISTERED PROFESSIONAL ENGINEER — Randell D. Hiatt — No. C50200 — Exp. 6-30-09 — CIVIL — STATE OF CALIFORNIA

The State of California or its officers or agents shall not be responsible for the accuracy or completeness of electronic copies of this plan sheet.

To accompany plans dated 5-10-10

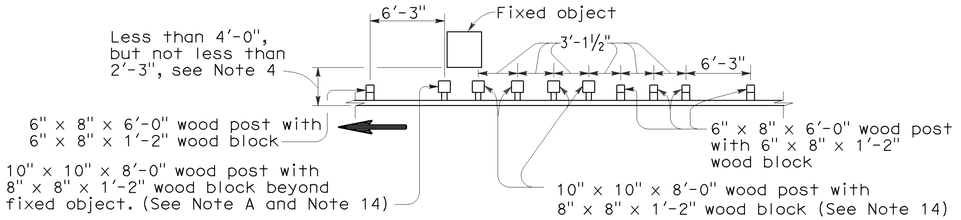

Note A. For a series of fixed objects (bridge columns, overhead sign supports, etc.) additional 10" x 10" x 8'-0" wood post with 8" x 8" x 1'-2" wood blocks at 3'-1½" center to center spacing are to be used between fixed object(s).

STRENGTHENED RAILING SECTIONS FOR FIXED OBJECT

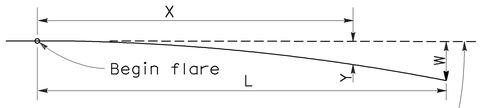

Base Line (Edge of paved shoulder or offset line of edge of traveled way)

$$Y = \frac{WX^2}{L^2}$$

Y = Offset from base line
W = Maximum offset
X = Distance along base line
L = Length of flare

PARABOLIC FLARE OFFSETS

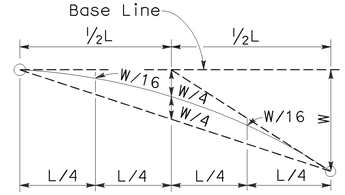

TYPICAL PARABOLIC LAYOUT

Use strengthened railing sections with Layout Types 16I or 16J Layouts where minimum clearance between the face of the guard railing and fixed object(s) is less than 4'-0", but not less than 2'-3". See Note 4.

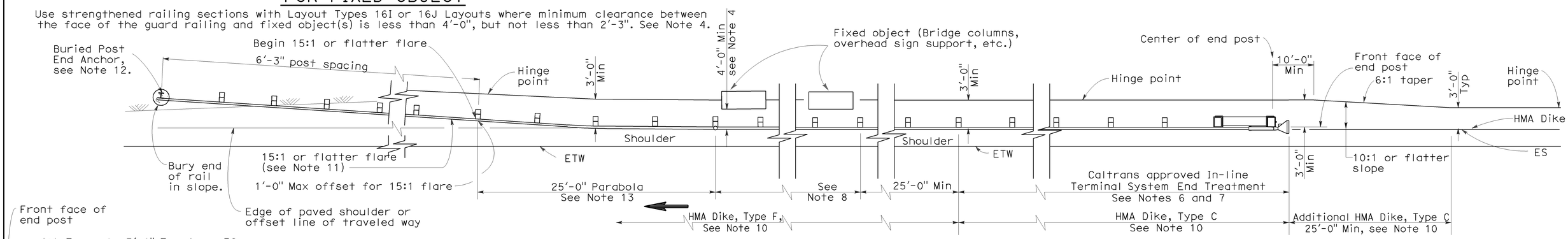

TYPE 16I LAYOUT

(GUARD RAILING INSTALLATION AT ROADSIDE FIXED OBJECT OR OBJECTS WITH AN IN-LINE END TREATMENT AND A BURIED END ANCHOR TREATMENT AT THE ENDS OF RAILING)
See Note 9

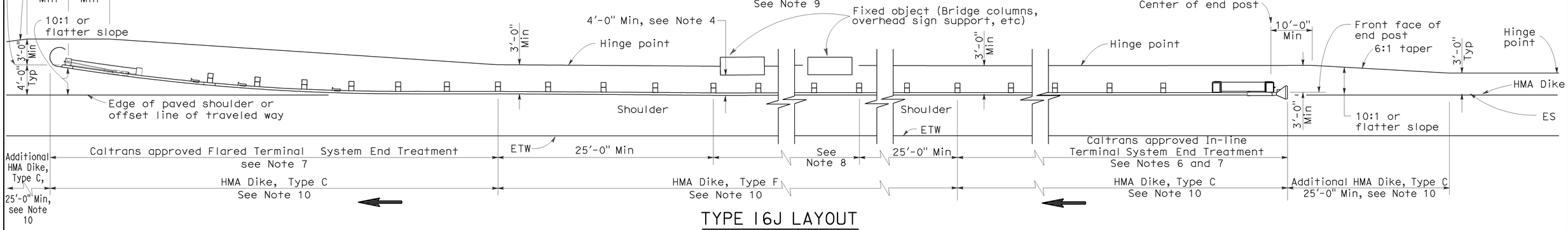

TYPE 16J LAYOUT

(GUARD RAILING INSTALLATION AT ROADSIDE FIXED OBJECT OR OBJECTS WITH AN IN-LINE END TREATMENT AND A FLARED END TREATMENT AT THE ENDS OF RAILING)
See Note 9

NOTES:

1. Line post, blocks and hardware to be used are shown on Standard Plans A77A1, A77A2, A77B1, A77C1 and A77C2.
2. Guard railing post spacing to be 6'-3" center to center, except as otherwise noted.
3. Except as noted, line posts are 6" x 8" x 6'-0" wood with 6" x 8" x 1'-2" wood blocks. W6 x 9 steel posts, 6'-0" in length, with 6" x 8" x 1'-2" notched wood blocks or notched recycled plastic blocks may be used for 6" x 8" x 6'-0" wood posts with 6" x 8" x 1'-2" wood blocks where applicable and when specified.
4. A 4'-0" minimum clearance is required between the face of the railing and the face of a fixed object located directly behind standard guard railing sections with post spacing at 6'-3". Construct guard railing as shown in the detail "Strengthened Railing Sections for Fixed Objects" on this plan, where the clearance between the face of the railing and the face of a fixed object is less than 4'-0", but not less than 2'-3". Where the clearance is less than 2'-3", a concrete wall or barrier should be constructed to shield the fixed object(s).
5. Direction of adjacent traffic indicated by ⟵ .
6. In-line Terminal System End Treatments are used where site conditions will not accommodate a flared end treatment.
7. The type of terminal system to be used will be shown on the Project Plans.
8. As site conditions dictate, construct additional guard railing to shield fixed object(s). Additional guard railing length equal to multiples of 12'-6". Post spacing at 6'-3", except as specified in Note 4.
9. Layout Types 16D through 16L, shown on the A77G Series of Revised Standard Plans, are typically used where guard railing is recommended to shield roadside fixed object(s) and a crashworthy end treatment is required for both directions of traffic.
10. Where placement of dike is required with guard railing, see Revised Standard Plan RSP A77C4 for dike positioning details.
11. The 15:1 or flatter flare for the buried post anchor is based on the edge of the paved shoulder or offset line of edge of the traveled way. The length of guard railing within the 15:1 or flatter flare is based on site conditions and should be a length equal to multiples of 12'-6".
12. For details of Buried Post End Anchor details, see Standard Plan A77I2.
13. For typical flare offsets for 25'-0" length parabola with maximum offset of 1'-0", see Revised Standard RSP Plan A77E1.
14. W6 x 15 steel post, 8'-0" in length, with 8" x 8" x 1'-2" notched wood block or notched recycled plastic blocks may be used in place of the 10" x 10" x 8'-0" wood post with 8" x 8" x 1'-2" wood block shown in the "Strengthened Railing Sections Detail".

STATE OF CALIFORNIA
DEPARTMENT OF TRANSPORTATION

METAL BEAM GUARD RAILING TYPICAL LAYOUTS FOR ROADSIDE FIXED OBJECTS

NO SCALE

RSP A77G7 DATED JUNE 6, 2008 SUPERSEDES STANDARD PLAN A77G7 DATED MAY 1, 2006 - PAGE 65 OF THE STANDARD PLANS BOOK DATED MAY 2006.

REVISED STANDARD PLAN RSP A77G7

2006 REVISED STANDARD PLAN RSP A77G7

12-10-07

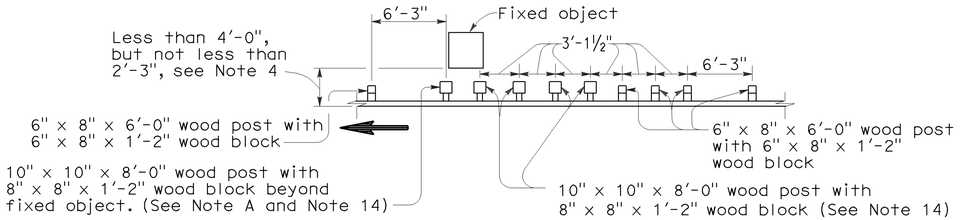

Note A. For a series of fixed objects (bridge columns, overhead sign supports, etc.) additional 10" x 10" x 8'-0" wood post with 8" x 8" x 1'-2" wood blocks at 3'-1½" center to center spacing are to be used between fixed object(s).

STRENGTHENED RAILING SECTIONS FOR FIXED OBJECT

Use strengthened railing sections with Layout Types 16K or 16L Layouts where minimum clearance between the face of the guard railing and fixed object(s) is less than 4'-0", but not less than 2'-3". See Note 4.

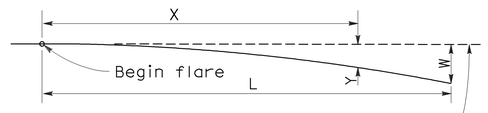

Base Line (Edge of paved shoulder or offset line of edge of traveled way)

$Y = \frac{WX^2}{L^2}$

Y = Offset from base line
W = Maximum offset
X = Distance along base line
L = Length of flare

PARABOLIC FLARE OFFSETS

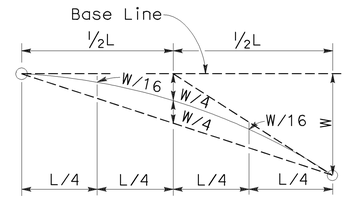

TYPICAL PARABOLIC LAYOUT

DIST	COUNTY	ROUTE	POST MILES TOTAL PROJECT	SHEET NO.	TOTAL SHEETS
03	Yol, Col	5	R21.5/R23.8,R27.0/R28.9,R0.0/R21.0	62	87

Randell D. Hiatt
REGISTERED CIVIL ENGINEER

June 6, 2008
PLANS APPROVAL DATE

REGISTERED PROFESSIONAL ENGINEER — Randell D. Hiatt — No. C50200 — Exp. 6-30-09 — CIVIL — STATE OF CALIFORNIA

The State of California or its officers or agents shall not be responsible for the accuracy or completeness of electronic copies of this plan sheet.

To accompany plans dated 5-10-10

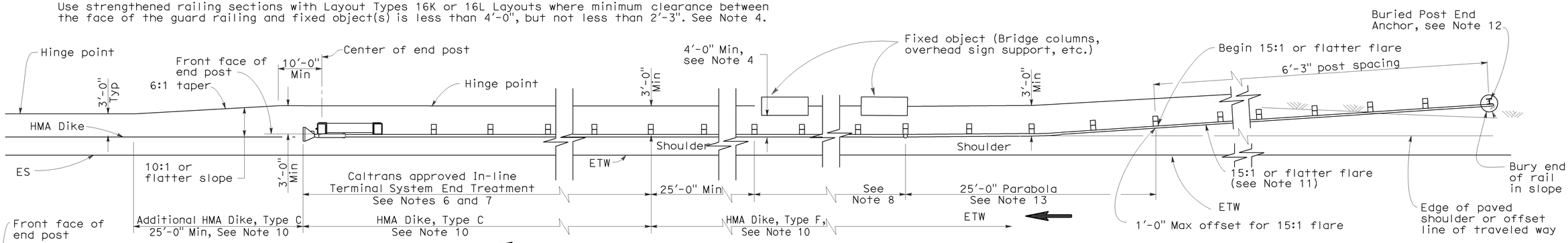

TYPE 16K LAYOUT

(GUARD RAILING INSTALLATION AT ROADSIDE FIXED OBJECT OR OBJECTS WITH A BURIED END ANCHOR TREATMENT AND AN IN-LINE END TREATMENT AT THE ENDS OF RAILING)
See Note 9

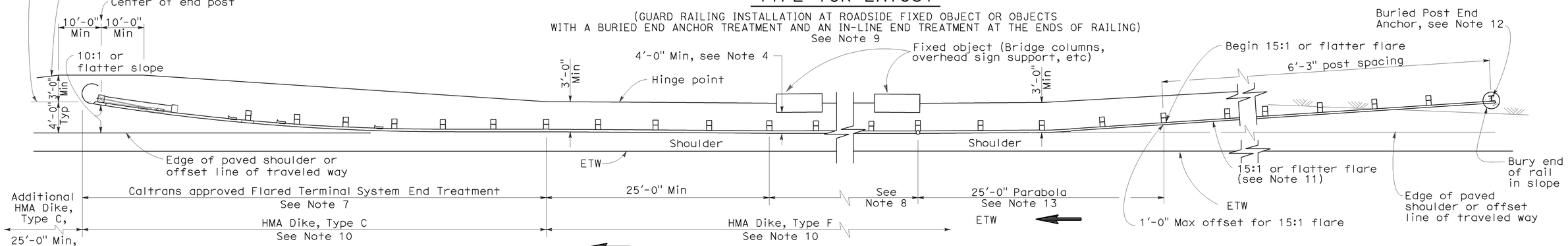

TYPE 16L LAYOUT

(GUARD RAILING INSTALLATION AT ROADSIDE FIXED OBJECT OR OBJECTS WITH A BURIED END ANCHOR TREATMENT AND A FLARED END TREATMENT AT THE ENDS OF RAILING)
See Note 9

NOTES:

1. Line post, blocks and hardware to be used are shown on Standard Plans A77A1, A77A2, A77B1, A77C1 and A77C2.
2. Guard railing post spacing to be 6'-3" center to center, except as otherwise noted.
3. Except as noted, line posts are 6" x 8" x 6'-0" wood with 6" x 8" x 1'-2" wood blocks. W6 x 9 steel posts, 6'-0" in length, with 6" x 8" x 1'-2" notched wood blocks or notched recycled plastic blocks may be used for 6" x 8" x 6'-0" wood posts with 6" x 8" x 1'-2" wood blocks where applicable and when specified.
4. A 4'-0" minimum clearance is required between the face of the railing and the face of a fixed object located directly behind standard guard railing sections with post spacing at 6'-3". Construct guard railing as shown in the detail "Strengthened Railing Sections for Fixed Objects" on this plan, where the clearance between the face of the railing and the face of a fixed object is less than 4'-0", but not less than 2'-3". Where the clearance is less than 2'-3", a concrete wall or barrier should be constructed to shield the fixed object(s).
5. Direction of adjacent traffic indicated by ➞.
6. In-line Terminal System End Treatments are used where site conditions will not accommodate a flared end treatment.
7. The type of terminal system to be used will be shown on the Project Plans.
8. As site conditions dictate, construct additional guard railing to shield fixed object(s). Additional guard railing length equal to multiples of 12'-6". Post spacing at 6'-3", except as specified in Note 4.
9. Layout Types 16D through 16L, shown on the A77G Series of Revised Standard Plans are typically used where guard railing is recommended to shield roadside fixed object(s) and a crashworthy end treatment is required for both directions of traffic.
10. Where placement of dike is required with guard railing, see Revised Standard Plan RSP A77C4 for dike positioning details.
11. The 15:1 or flatter flare for the buried post anchor is based on the edge of the paved shoulder or offset line of edge of the traveled way. The length of guard railing within the 15:1 or flatter flare is based on site conditions and should be a length equal to multiples of 12'-6".
12. For details of Buried Post End Anchor details, see Standard Plan A77I2.
13. For typical flare offsets for 25'-0" length parabola with maximum offset of 1'-0", see Revised Standard RSP Plan A77E1.
14. W6 x 15 steel post, 8'-0" in length, with 8" x 8" x 1'-2" notched wood block or notched recycled plastic blocks may be used in place of the 10" x 10" x 8'-0" wood post with 8" x 8" x 1'-2" wood block shown in the "Strengthened Railing Sections Detail".

STATE OF CALIFORNIA
DEPARTMENT OF TRANSPORTATION

METAL BEAM GUARD RAILING TYPICAL LAYOUTS FOR ROADSIDE FIXED OBJECTS

NO SCALE

RSP A77G8 DATED JUNE 6, 2008 SUPERSEDES STANDARD PLAN A77G8
DATED MAY 1, 2006 - PAGE 66 OF THE STANDARD PLANS BOOK DATED MAY 2006.

REVISED STANDARD PLAN RSP A77G8

2006 REVISED STANDARD PLAN RSP A77G8

12-10-07

DIST	COUNTY	ROUTE	POST MILES TOTAL PROJECT	SHEET NO.	TOTAL SHEETS
03	Yol, Col	5	R21.5/R23.8,R27.0/ R28.9,R0.0/R21.0	63	87

Randell D. Hiatt
REGISTERED CIVIL ENGINEER

June 6, 2008
PLANS APPROVAL DATE

The State of California or its officers or agents shall not be responsible for the accuracy or completeness of electronic copies of this plan sheet.

REGISTERED PROFESSIONAL ENGINEER — Randell D. Hiatt — No. C50200 — Exp. 6-30-09 — CIVIL — STATE OF CALIFORNIA

To accompany plans dated 5-10-10

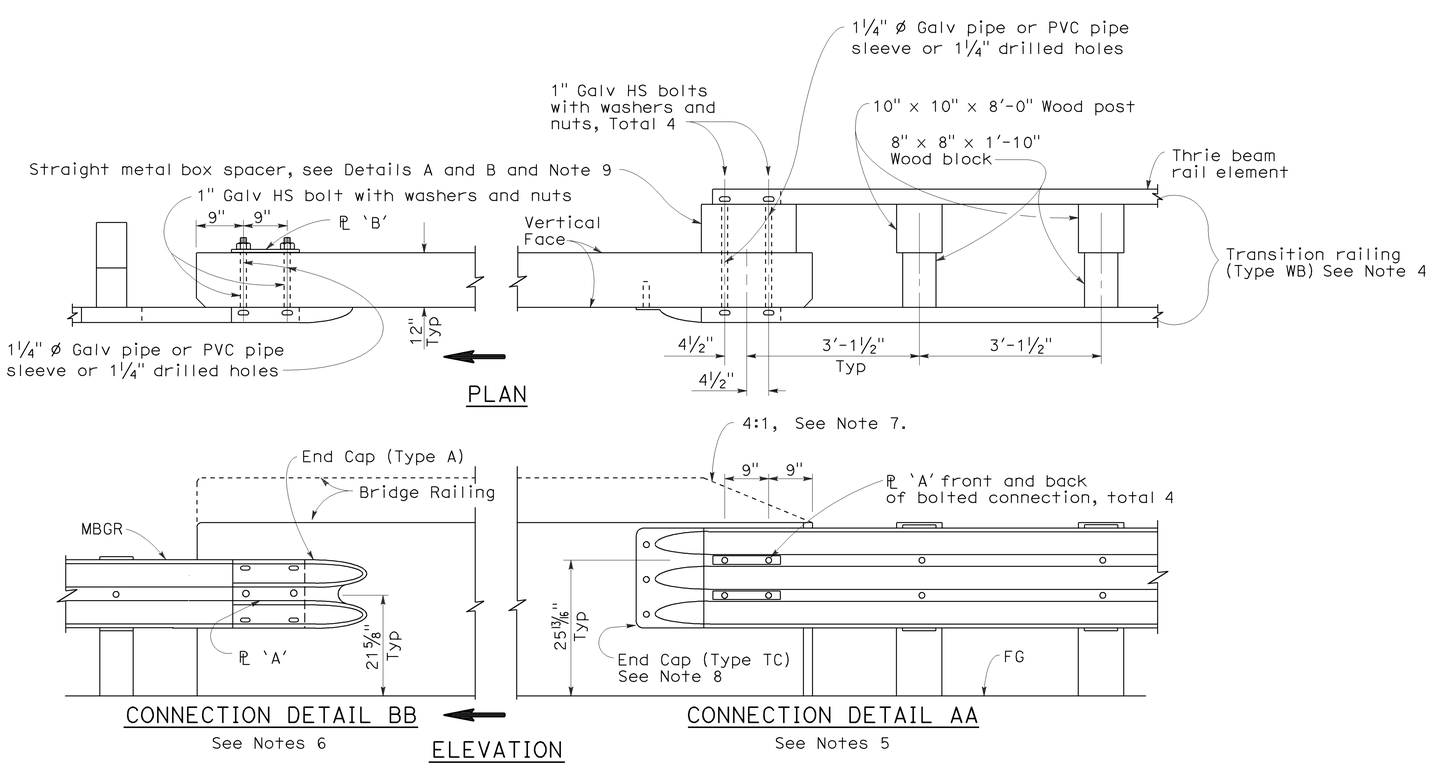

GUARD RAILING CONNECTION TO BRIDGE RAILING WITHOUT SIDEWALK

NOTES:

1. See Revised Standard Plan RSP A77J2 for additional connection details to bridges without sidewalks.
2. Additional details of posts, blocks and hardware are shown on Standard Plan A77B1, A77C1 and A77C2.
3. Direction of adjacent traffic indicated by ➞.
4. For additional details of Transition Railing (Type WB), see Standard Plan A77J4. Transition Railing (Type WB) transitions the 12 gage w-beam standard railing section of guard railing to a heavier gage nested thrie beam railing section which is connected to the concrete bridge railing.
5. For typical use of Connection Detail AA, see Layout Types 12A and 12B on Revised Standard Plan RSP A77F1, Layout Types 12C and 12D on Standard Plan A77F2, and Layout Type 12E on Revised Standard Plan RSP A77F3.
6. For typical use of Connection Detail BB, see Layout Type 12D (structure departure railing connection) on Standard Plan A77F2 and Layout Type 12DD on Standard Plan A77F5.
7. Where the height of the bridge railing exceeds the height of the thrie beam railing by more than 1" at Connection Detail AA, taper the top of the end of the bridge railing at 4:1 to match the top elevation of the thrie beam rail.
8. For details of End Cap (Type TC), see Standard Plan A77J4.
9. See Standard Plan A77J4 for additional details regarding depth dimension for straight metal box spacer.

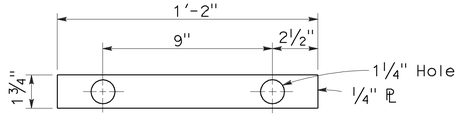

PLATE 'A'

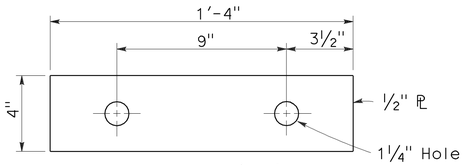

PLATE 'B'
(For backside of connection BB)

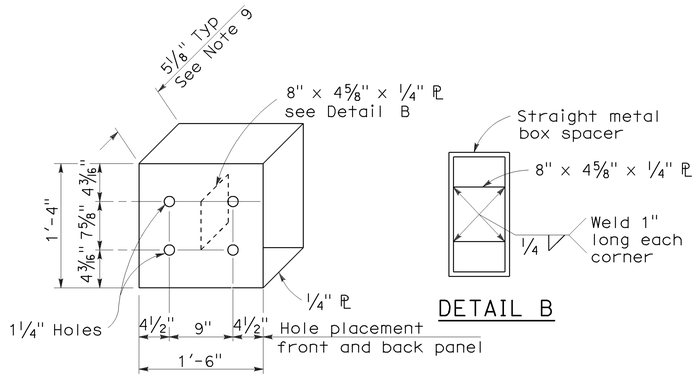

DETAIL A

STRAIGHT METAL BOX SPACER

STATE OF CALIFORNIA
DEPARTMENT OF TRANSPORTATION

METAL BEAM GUARD RAILING CONNECTIONS TO BRIDGE RAILINGS WITHOUT SIDEWALKS DETAILS No.1

NO SCALE

RSP A77J1 DATED JUNE 6, 2008 SUPERSEDES STANDARD PLAN A77J1
DATED MAY 1, 2006 - PAGE 72 OF THE STANDARD PLANS BOOK DATED MAY 2006.

REVISED STANDARD PLAN RSP A77J1

2006 REVISED STANDARD PLAN RSP A77J1

12-10-07

DIST	COUNTY	ROUTE	POST MILES TOTAL PROJECT	SHEET NO.	TOTAL SHEETS
03	Yol, Col	5	R21.5/R23.8,R27.0/ R28.9,R0.0/R21.0	64	87

Randell D. Hiatt
REGISTERED CIVIL ENGINEER

June 5, 2009
PLANS APPROVAL DATE

REGISTERED PROFESSIONAL ENGINEER — Randell D. Hiatt — No. C50200 — Exp. 6-30-09 — CIVIL — STATE OF CALIFORNIA

The State of California or its officers or agents shall not be responsible for the accuracy or completeness of electronic copies of this plan sheet.

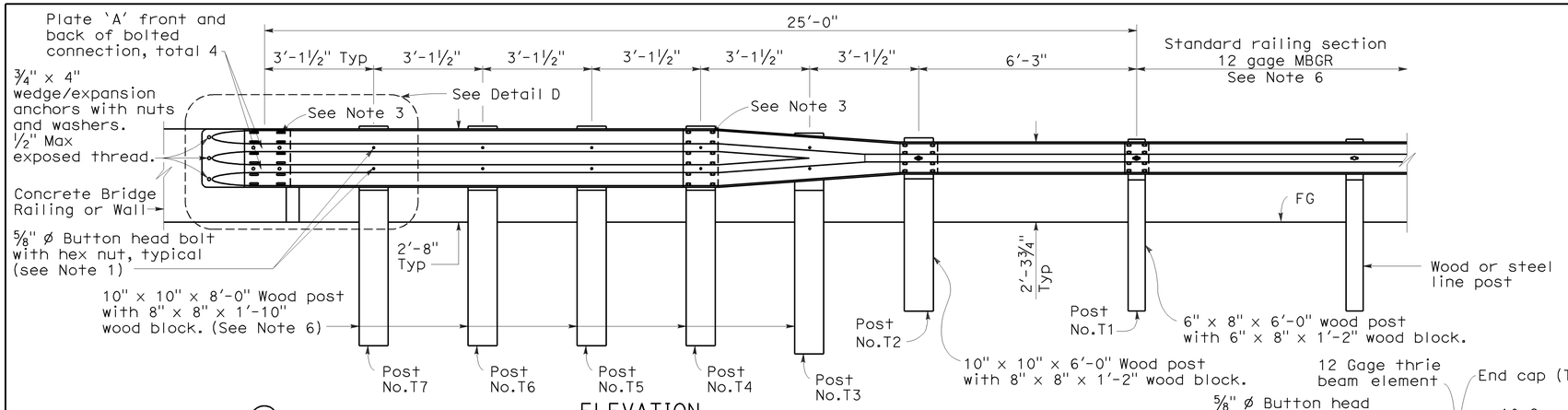

ELEVATION

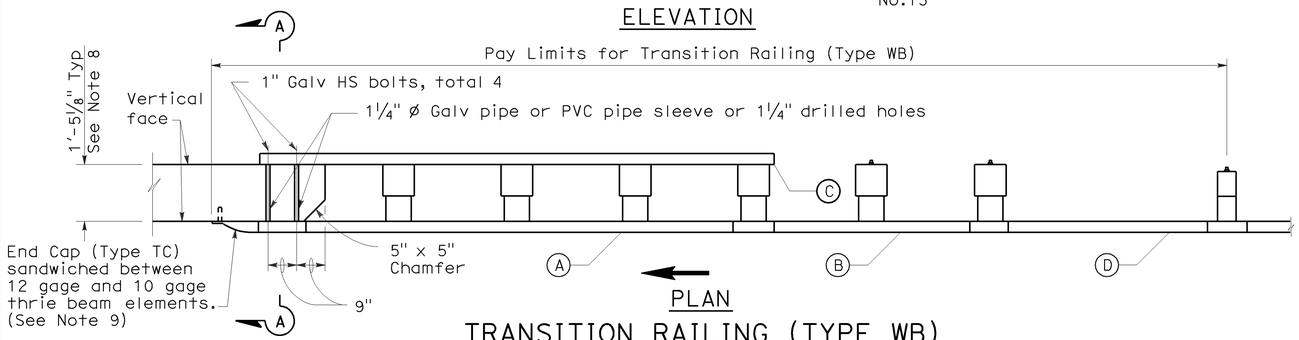

PLAN

TRANSITION RAILING (TYPE WB)

(No Blockout Attachment)

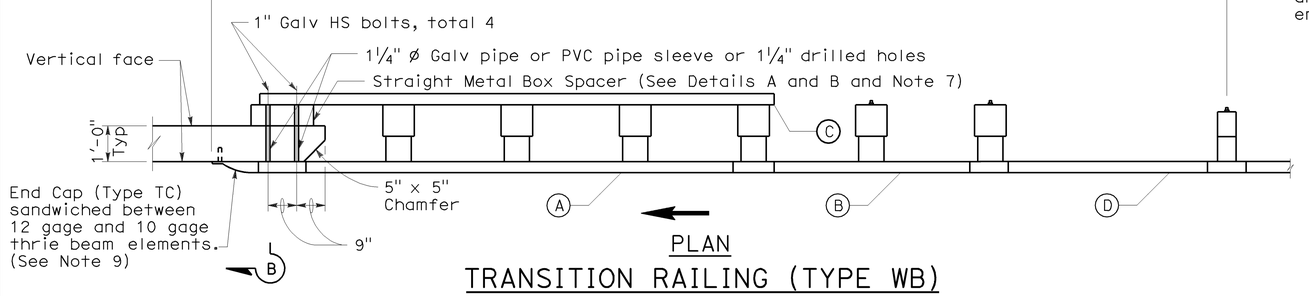

PLAN

TRANSITION RAILING (TYPE WB)

(Blockout Attachment)

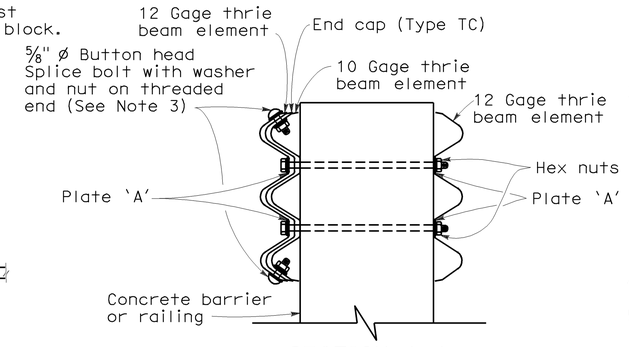

SECTION A-A

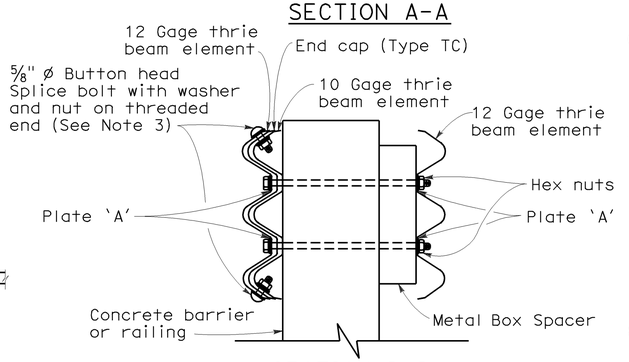

SECTION B-B

LEGEND

- (A) Nested thrie beam elements (one 12 gage element nested over one 10 gage element).
- (B) One 10 gage "W" beam to thrie beam element.
- (C) One 12 gage thrie beam element.
- (D) One 10 gage "W" beam rail element (7'-3½" length)

  10 gage = 0.135" thick

  12 gage = 0.108" thick

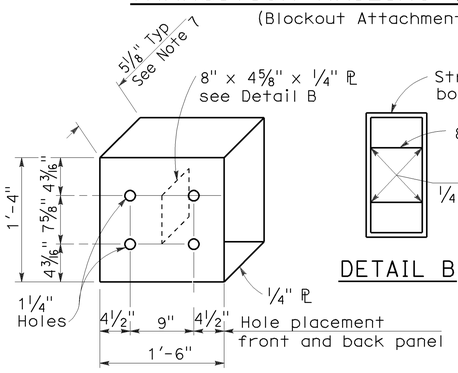

DETAIL A

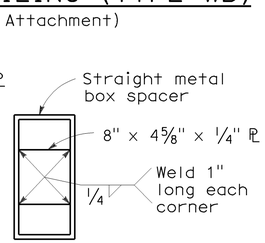

DETAIL B

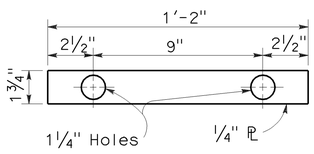

DETAIL C

STRAIGHT METAL BOX SPACER

PLATE 'A'

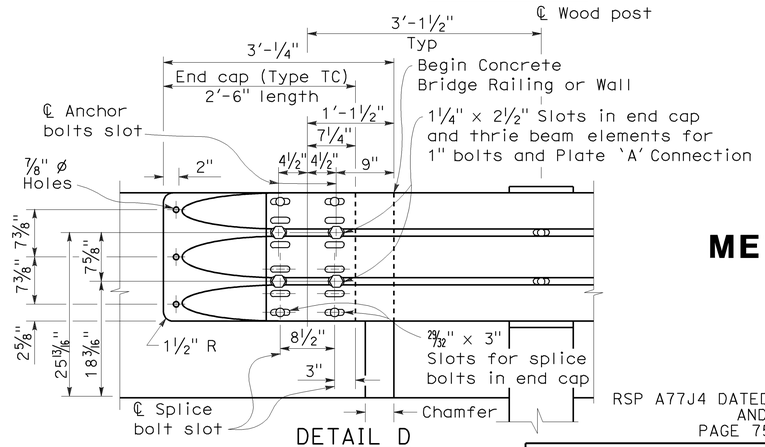

DETAIL D

NOTES:

To accompany plans dated 5-10-10

1. Use 5/8 " ø Button head bolts and hex nuts for connections to posts. No washer on rail face for bolted connections to post.
2. The nested rail elements, end cap, and 'W' beam to thrie beam element may be spliced together prior to bolting the elements to the wood post and concrete barrier or railing.
3. Exterior splice bolt holes for rail element splices at Post No.T4 and the connection to the concrete barrier or railing shall be the standard 29/32 " x 1 1/8 " slot size. Interior splice bolt holes at these locations may be increased up to 1 1/4 " ø. Only the top 2 and the bottom 2 splice bolts with washers and nuts are required for rail splices at Post No.T4 and the connection to the concrete barrier or railing.
4. Direction of adjacent traffic indicated by →.
5. The top elevation of Post Nos.T2 through T7 shall not project more than 1" above the top elevation of the rail element.
6. Typically, the railing connected to Transition Railing (Type WB) will be either standard railing section of metal beam guard railing or an approved Caltrans end treatment attached to Post No.T1.
7. The depth of the metal box spacer varies from the 5 1/8 " to 1 1/2 " and is dependent on the width of the concrete railing or wall. The combined dimension for the depth of the metal box spacer plus the width of railing or wall is typically 17 1/8 ". Where the space between the backside of the concrete railing or wall and the rear thrie beam element is less than 1 1/2 ", metal plates similar to Plate 'A' are to be used as spacers.
8. Where the width of the concrete railing or wall is greater than 17 1/8 ", wood blocks are to be used to fill the space created between the backside of Posts No.4 through No.7 and the rear thrie beam element. These wood blocks shall be 8" in width and 1'-2" in length. The dimension between the front thrie beam element and the rear thrie beam element is to match the width of the concrete railing or wall.
9. End cap may be installed over 12 gage and 10 gage thrie beam elements where transition railing is installed on the departure end of bridge railing.

STATE OF CALIFORNIA
DEPARTMENT OF TRANSPORTATION

METAL BEAM GUARD RAILING TRANSITION RAILING (TYPE WB)

NO SCALE

RSP A77J4 DATED JUNE 5, 2009 SUPERSEDES RSP A77J4 DATED JUNE 6, 2008 AND STANDARD PLAN A77J4 DATED MAY 1, 2006 - PAGE 75 OF THE STANDARD PLANS BOOK DATED MAY 2006.

REVISED STANDARD PLAN RSP A77J4

2006 REVISED STANDARD PLAN RSP A77J4

5-14-09

DIST	COUNTY	ROUTE	POST MILES TOTAL PROJECT	SHEET NO.	TOTAL SHEETS
03	Yol, Col	5	R21.5/R23.8,R27.0/ R28.9,R0.0/R21.0	65	87

Raymond Don Tsztoo
REGISTERED CIVIL ENGINEER

January 18, 2008
PLANS APPROVAL DATE

REGISTERED PROFESSIONAL ENGINEER — Raymond Don Tsztoo — No. C37332 — Exp. 6-30-08 — CIVIL — STATE OF CALIFORNIA

The State of California or its officers or agents shall not be responsible for the accuracy or completeness of electronic copies of this plan sheet.

To accompany plans dated 5-10-10

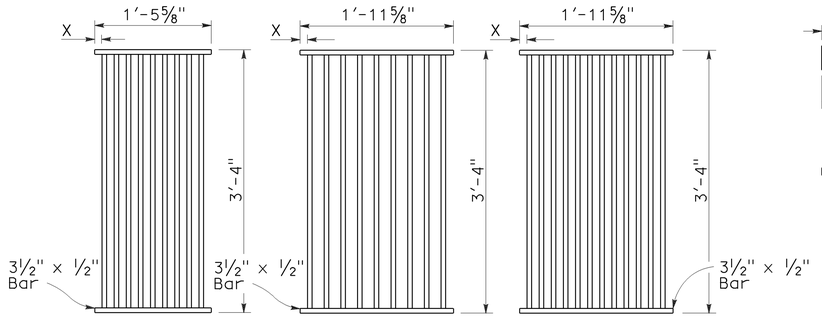

TYPE 18-9

1⅜" Clear spacing. Use within the roadbed on highways where bicycles and pedestrians are excluded.

TYPE 24-9

2" Clear spacing. Use in locations off the roadbed on all types of highways.

TYPE 24-12

1⅜" Clear spacing. Use within the roadbed on highways where bicycles and pedestrians are excluded.

RECTANGULAR GRATE DETAILS

(See table below)

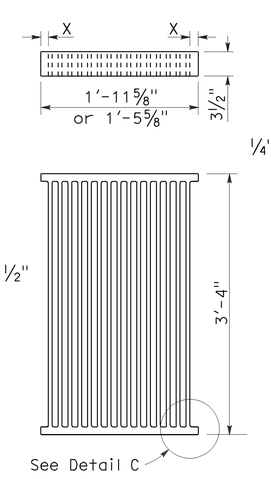

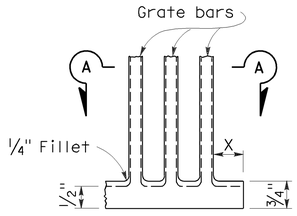

DETAIL C

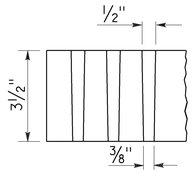

SECTION A-A

ALTERNATIVE CAST NODULAR IRON GRATE OR CAST STEEL GRATE

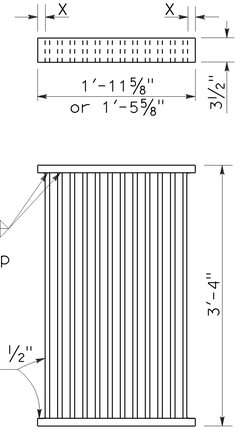

ALTERNATIVE WELDED GRATE

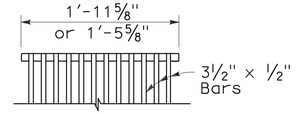

CAST END BLOCK

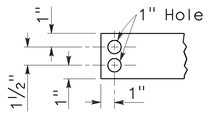

END OF BAR

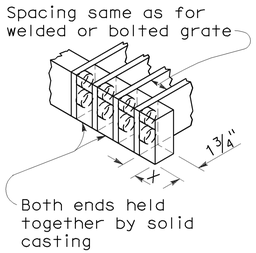

ALTERNATIVE CAST NODULAR IRON OR CAST STEEL END BLOCK GRATE

NOTES:

1. Grate type numbers refer to approximate width of grate in inches and number of bars, respectively.
2. Contractor has the option of using cast nodular iron, cast steel, welded, bolted, or cast end block grate.
3. See Special Provisions for requirements pertaining to galvanizing or asphalt dipping of grates and frames.
4. Rounded top of bars optional on all grates.
5. Pipe inlets with a grate shall be placed so that bars parallel direction of principle surface flow.
6. Full penetration butt welds may be substituted for the fillet welds on all anchors.
7. Standard square, hexagon, round or equivalent headed anchors may be substituted for the right angle hooks on the anchors shown on this plan.
8. Grate and frame weights are based on welded grates (weights of face angles, steps, protection bars, etc. are not included).

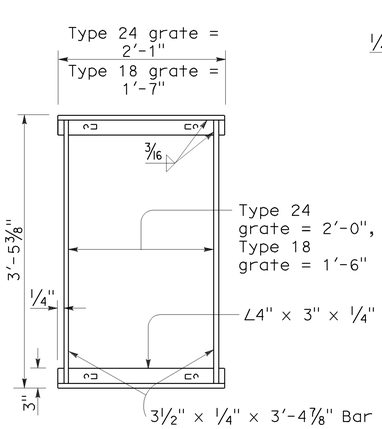

TYPICAL FRAME

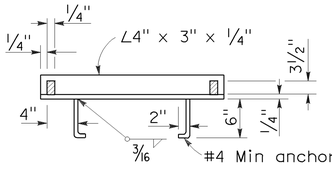

CROSS SECTION

(Thru frame)

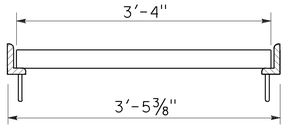

LONGITUDINAL SECTION

(Thru frame and grate)

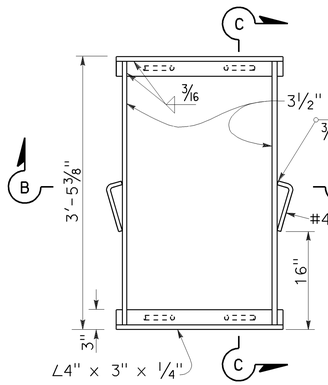

TYPICAL FRAME

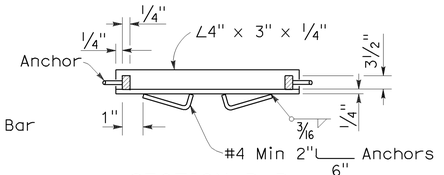

SECTION B-B

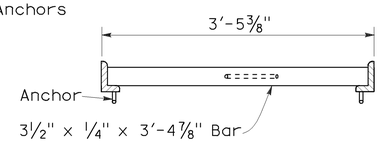

SECTION C-C

ALTERNATIVE ANCHOR FOR RECTANGULAR FRAME

(For details not shown, See Rectangular Frame Details)

RECTANGULAR FRAME DETAILS

(For all rectangular grates)

GRATE BAR SPACING TABLE

TYPE	No. OF BARS	CLEAR BAR SPACING	X
18-9	9	1⅜"	1 1/16"
24-9	9	2"	1 9/16"
24-12	12	1⅜"	1¼"

INLET TYPE	COVER TYPE	WEIGHT LB
OS	PLATE	174
OL-7	PLATE	170
OL-10	PLATE	170
OL-14	PLATE	170
OL-21	PLATE	170
OCP	PLATE	112
OCPI	PLATE	112
OCPI	REDWOOD	42
OMP	PLATE	177
OMPI	PLATE	177

INLET TYPE	GRATE TYPE	No. OF GRATES	WEIGHT LB
GDO	24-12	2	634
GOL-7	24-12	1	326
GOL-10	24-12	1	326
GO,G1,G2,G3,G4 (TYPE 24)	24-9	1	263
	24-12	1	326
G4 (TYPE 18),G5,G6	18-9	1	249
GT1	18-9	2	498
GT2	18-9	2	498
GT3	24-12	2	652
GT4	24-12	2	652
TRASH RACK			22

BASIS FOR MISC IRON & STEEL FINAL PAY WEIGHTS FOR DRAINAGE INLETS

(See General Notes, No 8)

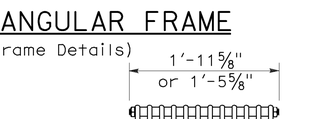

BOLTED END BLOCK

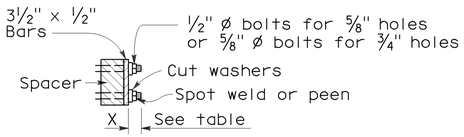

BOLTING DETAIL

ALTERNATIVE BOLTED GRATE

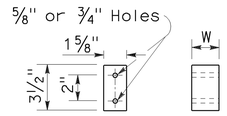

BAR SPACER

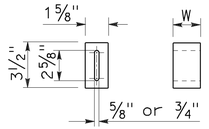

ALTERNATIVE SPACER

W = 1⅜" or 2"

STATE OF CALIFORNIA
DEPARTMENT OF TRANSPORTATION

GRATE DETAILS

NO SCALE

RSP D77A DATED JANUARY 18, 2008 SUPERSEDES STANDARD PLAN D77A DATED MAY 1, 2006 - PAGE 155 OF THE STANDARD PLANS BOOK DATED MAY 2006.

REVISED STANDARD PLAN RSP D77A

12-14-07

DIST	COUNTY	ROUTE	POST MILES TOTAL PROJECT	SHEET NO.	TOTAL SHEETS
03	Yol, Col	5	R21.5/R23.8,R27.0/ R28.9,R0.0/R21.0	66	87

Randell D. Hiatt
REGISTERED CIVIL ENGINEER

June 6, 2008
PLANS APPROVAL DATE

Randell D. Hiatt No. C50200 Exp. 6-30-09 CIVIL — REGISTERED PROFESSIONAL ENGINEER — STATE OF CALIFORNIA

The State of California or its officers or agents shall not be responsible for the accuracy or completeness of electronic copies of this plan sheet.

To accompany plans dated 5-10-10

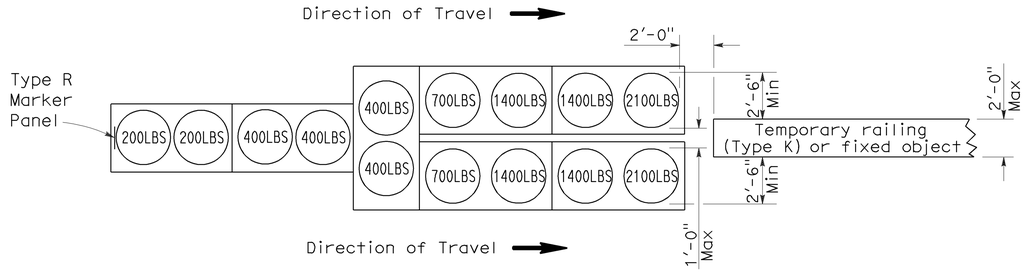

ARRAY 'TU14'

Approach speed 45 mph or more

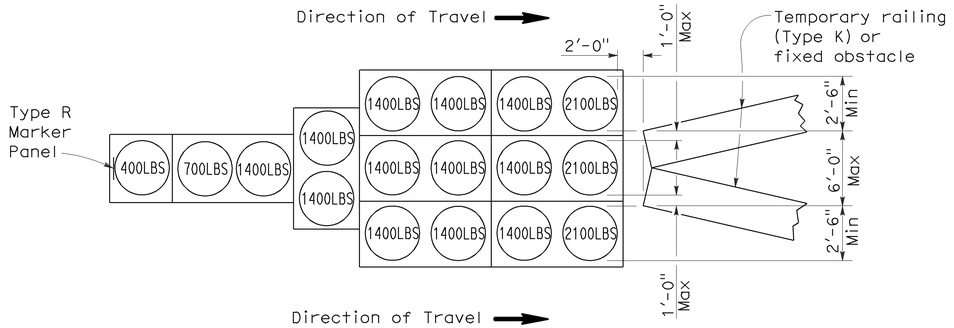

ARRAY 'TU17'

Approach speed less than 45 mph

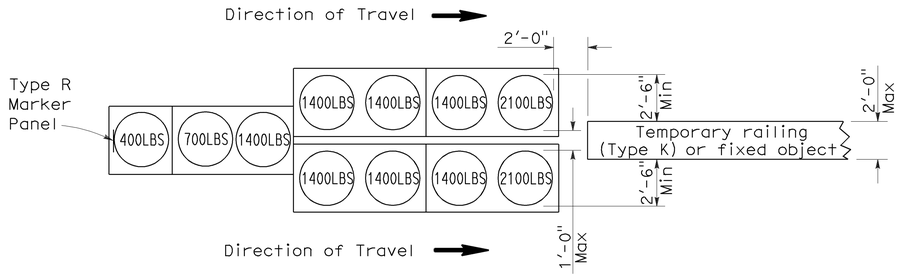

ARRAY 'TU11'

Approach speed less than 45 mph

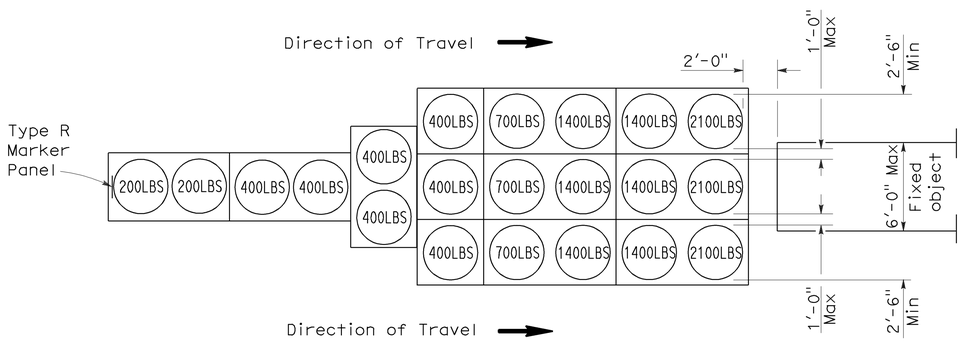

ARRAY 'TU21'

Approach speed 45 mph or more

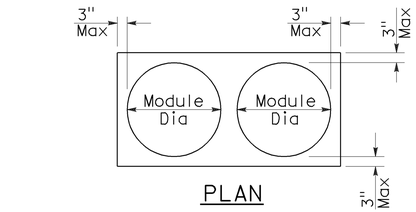

PLAN

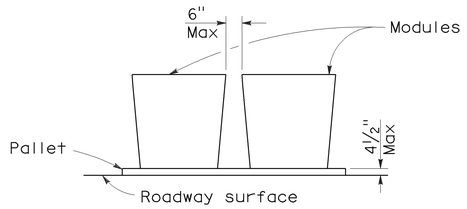

ELEVATION

CRASH CUSHION PALLET DETAIL

See Note 7

NOTES:

1. (XXX) Indicates sand filled module location and weight of sand in pounds for each module. Module spacing is based on the greater diameter of the module.
2. All sand weights are nominal.
3. Temporary crash cushion arrays shall not encroach on the traveled way.
4. Place the top of Type R marker panel 1" below the module lid.
5. Refer to Standard Plan A73B for marker details.
6. Approach speeds indicated conform to NCHRP 350 Report criteria.
7. Use of pallets is optional.

STATE OF CALIFORNIA
DEPARTMENT OF TRANSPORTATION

TEMPORARY CRASH CUSHION, SAND FILLED (UNIDIRECTIONAL)

NO SCALE

RSP T1A DATED JUNE 6, 2008 SUPERSEDES STANDARD PLAN T1A
DATED MAY 1, 2006 - PAGE 211 OF THE STANDARD PLANS BOOK DATED MAY 2006.

REVISED STANDARD PLAN RSP T1A

2006 REVISED STANDARD PLAN RSP T1A

5-15-08

DIST	COUNTY	ROUTE	POST MILES TOTAL PROJECT	SHEET NO.	TOTAL SHEETS
03	Yol, Col	5	R21.5/R23.8,R27.0/R28.9,R0.0/R21.0	67	87

Randell D. Hiatt
REGISTERED CIVIL ENGINEER

June 6, 2008
PLANS APPROVAL DATE

REGISTERED PROFESSIONAL ENGINEER
Randell D. Hiatt
No. C50200
Exp. 6-30-09
CIVIL
STATE OF CALIFORNIA

The State of California or its officers or agents shall not be responsible for the accuracy or completeness of electronic copies of this plan sheet.

To accompany plans dated 5-10-10

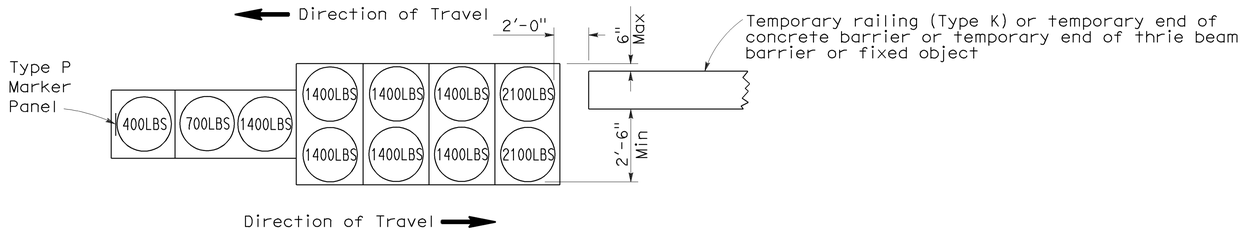

ARRAY 'TB11'

Approach speed less than 45 mph

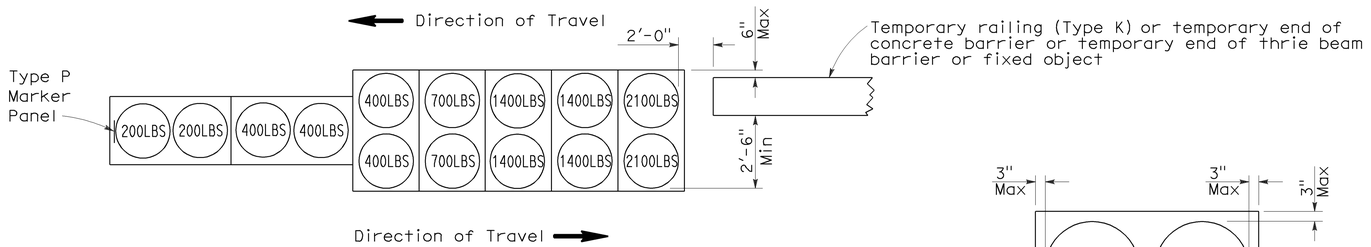

ARRAY 'TB14'

Approach speed 45 mph or more

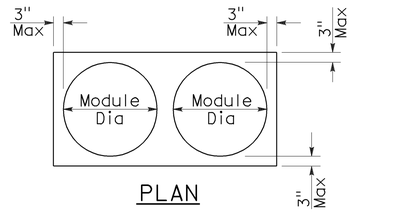

PLAN

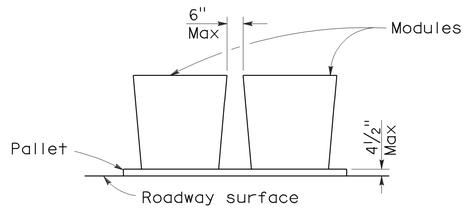

ELEVATION

CRASH CUSHION PALLET DETAIL

See Note 7

NOTES:

1. (XXX) Indicates sand filled module location and weight of sand in pounds for each module. Module spacing is based on the greater diameter of the module.
2. All sand weights are nominal.
3. Temporary crash cushion arrays shall not encroach on the traveled way.
4. Place the Type P marker panel so that the bottom of the panel rests upon the pallet.
5. Refer to Standard Plan A73B for marker details.
6. Approach speeds indicated conform to NCHRP 350 Report criteria.
7. Use of pallets is optional.

STATE OF CALIFORNIA
DEPARTMENT OF TRANSPORTATION

TEMPORARY CRASH CUSHION, SAND FILLED (BIDIRECTIONAL)

NO SCALE

RSP T1B DATED JUNE 6, 2008 SUPERSEDES STANDARD PLAN T1B DATED MAY 1, 2006 - PAGE 212 OF THE STANDARD PLANS BOOK DATED MAY 2006.

REVISED STANDARD PLAN RSP T1B

2006 REVISED STANDARD PLAN RSP T1B

5-15-08

DIST	COUNTY	ROUTE	POST MILES TOTAL PROJECT	SHEET NO.	TOTAL SHEETS
03	Yol, Col	5	R21.5/R23.8,R27.0/ R28.9,R0.0/R21.0	68	87

Randell D. Hiatt
REGISTERED CIVIL ENGINEER

June 6, 2008
PLANS APPROVAL DATE

REGISTERED PROFESSIONAL ENGINEER — Randell D. Hiatt — No. C50200 — Exp. 6-30-09 — CIVIL — STATE OF CALIFORNIA

The State of California or its officers or agents shall not be responsible for the accuracy or completeness of electronic copies of this plan sheet.

To accompany plans dated 5-10-10

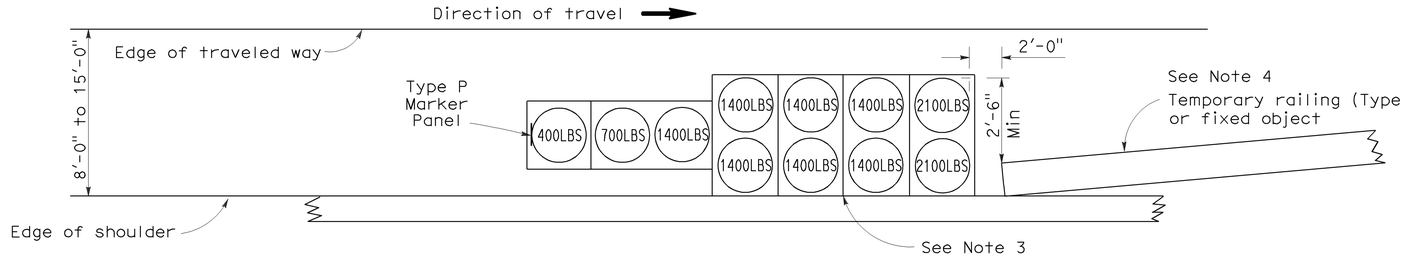

ARRAY 'TS11'

Approach speed less than 45 mph
See Note 9

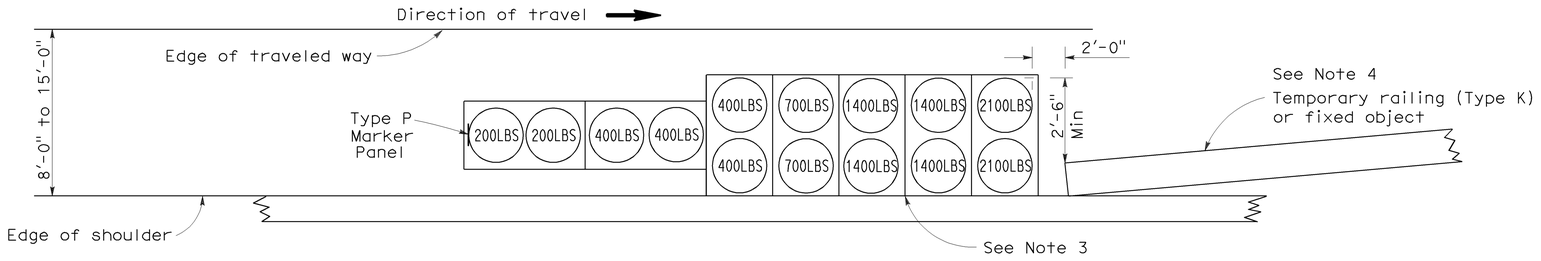

ARRAY 'TS14'

Approach speed 45 mph or more
See Note 9

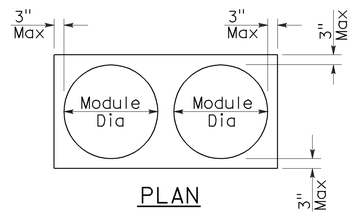

PLAN

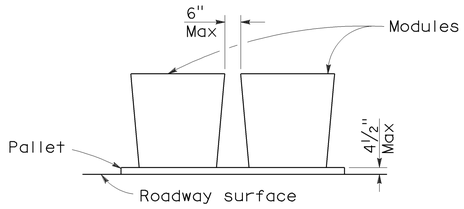

ELEVATION

CRASH CUSHION PALLET DETAIL

See Note 11

NOTES:

1. (XXX) Indicates sand filled module location and weight of sand in pounds for each module. Module spacing is based on the greater diameter of the module.
2. All sand weights are nominal.
3. The temporary crash cushion arrays shown on this plan shall be used only in locations where there will be traffic on one side of the temporary crash cushion array.
4. If the fixed object or approach end of the temporary railing is less than 15'-0" from the edge of traveled way, a temporary crash cushion is required in a construction or work zone.
5. Temporary crash cushion arrays shall not encroach on the traveled way.
6. Arrays for median shoulders shall conform to details shown on this plan for outside shoulders.
7. Place the Type P marker panel so that the bottom of the panel rests upon the pallet and faces traffic.
8. Refer to Standard Plan A73B for marker details.
9. For shoulder widths less than 8'-0", appropriate approved crash cushion protection, other than sand filled modules, shall be provided at fixed objects and at approach ends of temporary railing. The specific type of crash cushion shall be as shown on the project plans or as specified in the Special Provisions, or if not shown on the project plans or specified in the Special Provisions, shall be as approved by the Engineer.
10. Approach speeds indicated conform to NCHRP 350 Report criteria.
11. Use of pallets is optional.

STATE OF CALIFORNIA
DEPARTMENT OF TRANSPORTATION

TEMPORARY CRASH CUSHION, SAND FILLED (SHOULDER INSTALLATIONS)

NO SCALE

RSP T2 DATED JUNE 6, 2008 SUPERSEDES STANDARD PLAN T2
DATED MAY 1, 2006 - PAGE 213 OF THE STANDARD PLANS BOOK DATED MAY 2006.

REVISED STANDARD PLAN RSP T2

2006 REVISED STANDARD PLAN RSP T2

5-15-08

DIST	COUNTY	ROUTE	POST MILES TOTAL PROJECT	SHEET NO.	TOTAL SHEETS
03	Yol, Col	5	R21.5/R23.8,R27.0/ R28.9,R0.0/R21.0	69	87

Greg W. Edwards
REGISTERED CIVIL ENGINEER

November 17, 2006
PLANS APPROVAL DATE

REGISTERED PROFESSIONAL ENGINEER — Greg W. Edwards — No. C36386 — Exp. 6-30-08 CIVIL — STATE OF CALIFORNIA

The State of California or its officers or agents shall not be responsible for the accuracy or completeness of electronic copies of this plan sheet.

To accompany plans dated 5-10-10

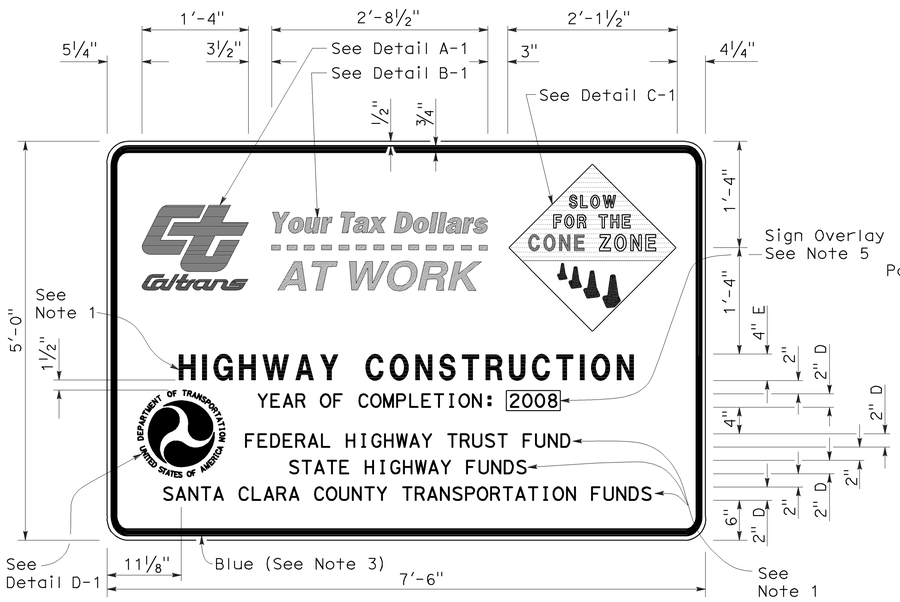

TYPE 1

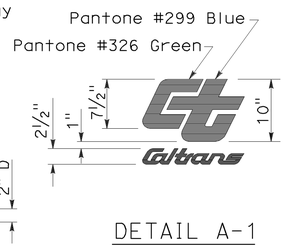

DETAIL A-1

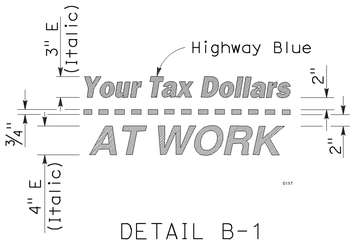

DETAIL B-1
(See Note 3)

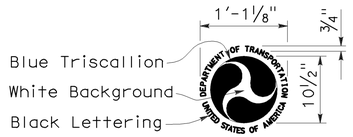

DETAIL D-1
(See Note 6)

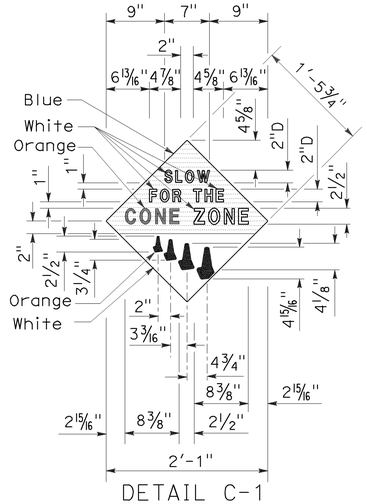

DETAIL C-1
(See Note 4)

NOTES:

1. The sign messages shown for type of project and fund types are examples only. See the Special Provisions for the applicable type of project and fund type messages to be used.
2. Except as otherwise shown, the legend of sign shall be black on a white background (non-reflective).
3. The border of the signs and details "B-1" and "B-2" shall be blue (non-reflective).
4. The diamond in details "C-1" and "C-2" shall be blue for the background of message, " SLOW FOR THE CONE ZONE", and white background for the orange cones. The color and type of font for the "SLOW FOR THE CONE ZONE" message shall be: "SLOW" white D; "FOR THE" white D; "CONE" orange Arial font; "ZONE" white Arial font.
5. Year of completion of project construction shown on the overlay is an example only. See the Special Provisions.
6. Use when the Project involves Federal Highway Trust Fund.

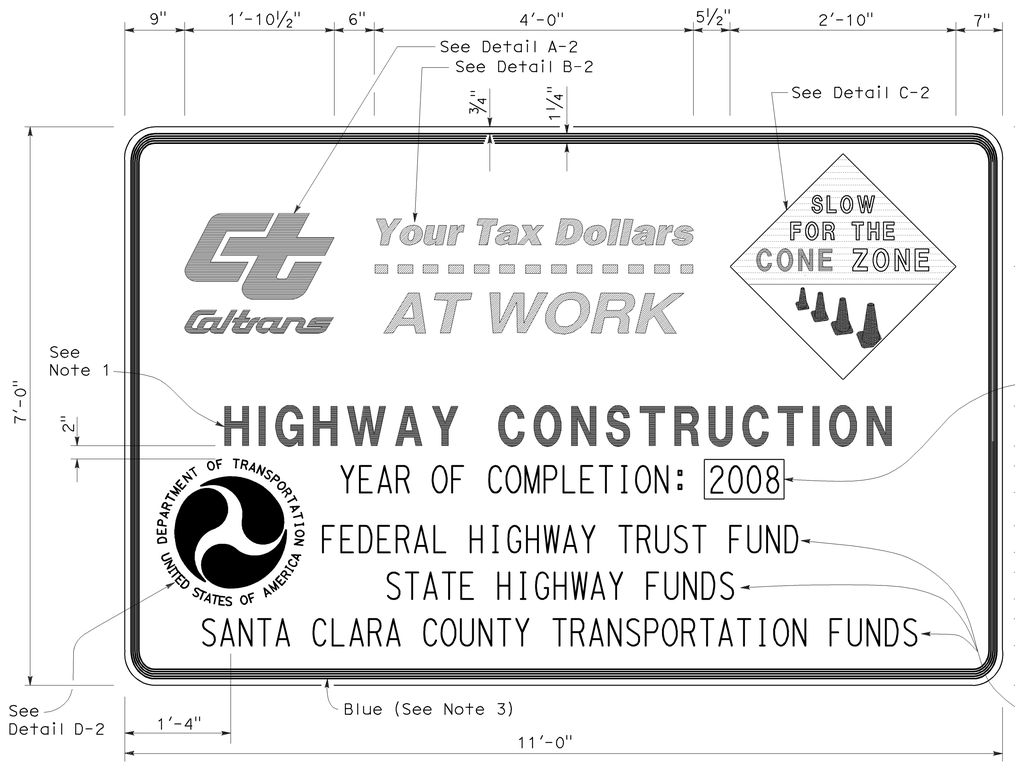

TYPE 2

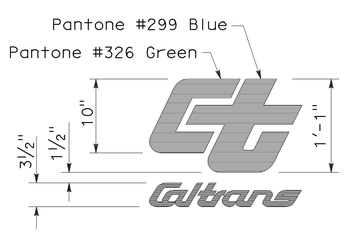

DETAIL A-2

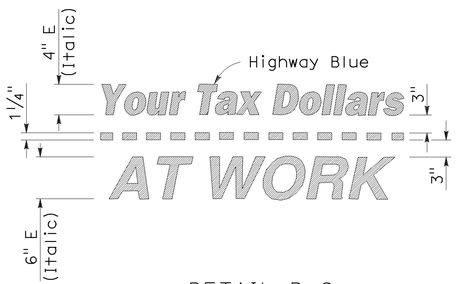

DETAIL B-2
(See Note 3)

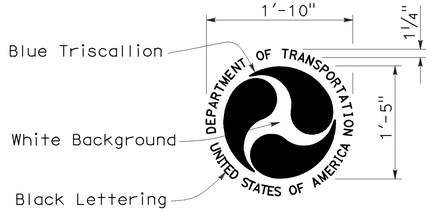

DETAIL D-2
(See Note 6)

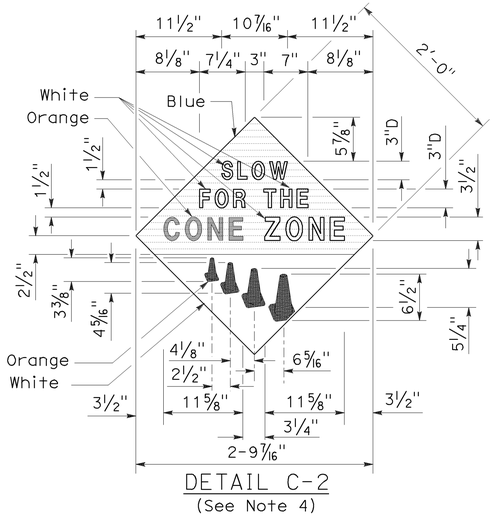

DETAIL C-2
(See Note 4)

STATE OF CALIFORNIA
DEPARTMENT OF TRANSPORTATION

CONSTRUCTION PROJECT FUNDING IDENTIFICATION SIGNS

NO SCALE

RSP T7 DATED NOVEMBER 17, 2006 SUPERSEDES STANDARD PLAN T7
DATED MAY 1, 2006 - PAGE 217 OF THE STANDARD PLANS BOOK DATED MAY 2006.

REVISED STANDARD PLAN RSP T7

2006 REVISED STANDARD PLAN RSP T7

9-7-06

DIST	COUNTY	ROUTE	POST MILES TOTAL PROJECT	SHEET NO.	TOTAL SHEETS
03	Yol, Col	5	R21.5/R23.8,R27.0/ R28.9,R0.0/R21.0	70	87

Robert B Schott
LICENSED LANDSCAPE ARCHITECT

August 15, 2008
PLANS Approval DATE

LICENSED LANDSCAPE ARCHITECT
Robert B. Schott 3695
Signature
11-04-08
Renewal Date
08-11-08
Date
STATE OF CALIFORNIA

The State of California or its officers or agents shall not be responsible for the accuracy or completeness of electronic copies of this plan sheet.

To accompany plans dated 5-10-10

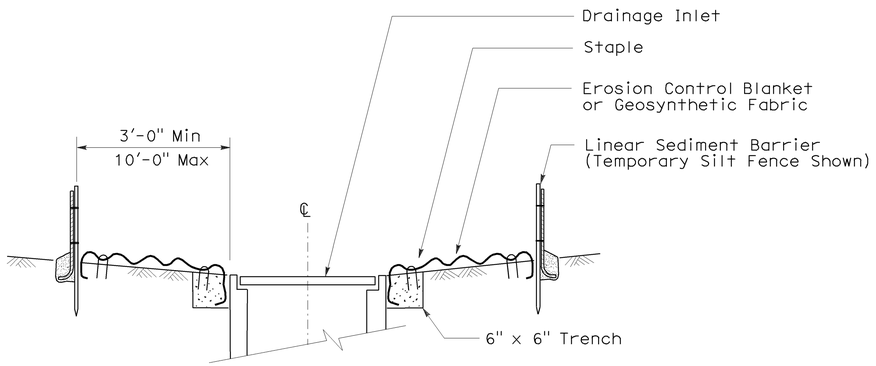

SECTION A-A

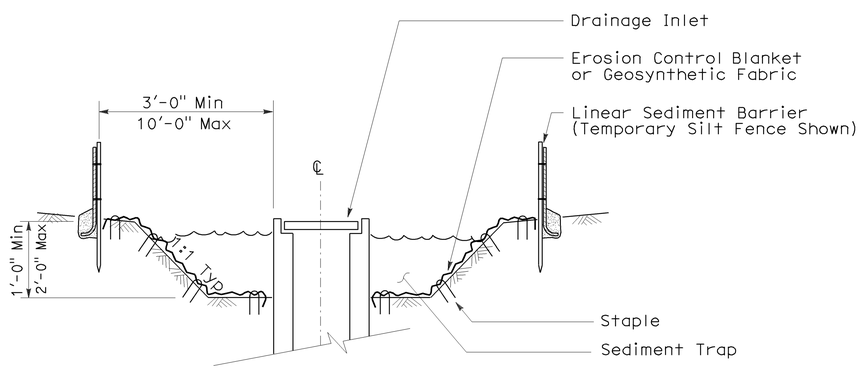

SECTION B-B

NOTES:

1. See Standard Plan T51 for Temporary Silt Fence.
2. Dimensions may vary to fit field conditions.

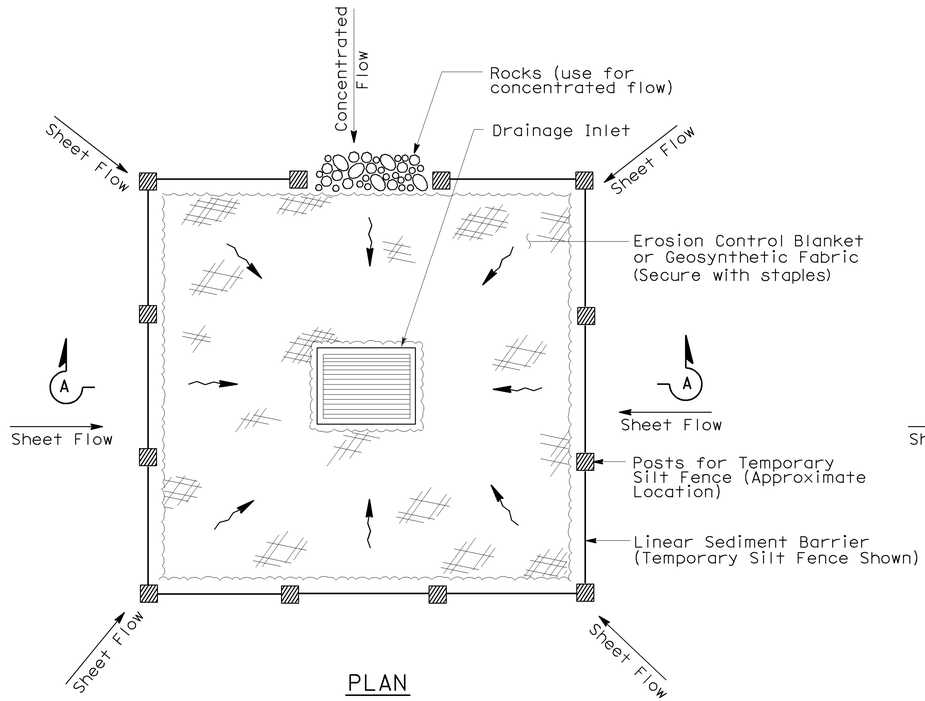

PLAN

TEMPORARY DRAINAGE INLET PROTECTION (TYPE 1)

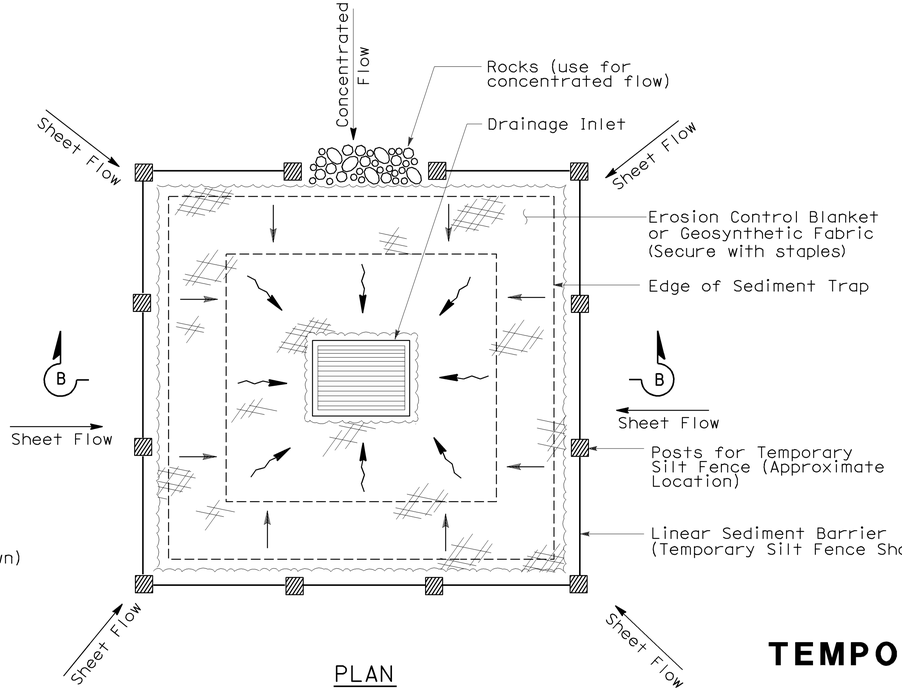

PLAN

TEMPORARY DRAINAGE INLET PROTECTION (TYPE 2) (EXCAVATED SEDIMENT TRAP)

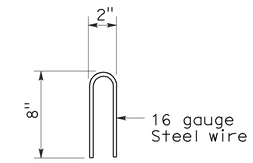

STAPLE DETAIL

STATE OF CALIFORNIA
DEPARTMENT OF TRANSPORTATION

TEMPORARY WATER POLLUTION CONTROL DETAILS (TEMPORARY DRAINAGE INLET PROTECTION)

NO SCALE

Nsp t61 dated august 15, 2008 supplements the standard plans book dated may 2006.

NEW STANDARD PLAN NSP T61

2006 NEW STANDARD PLAN NSP T61

7-11-08

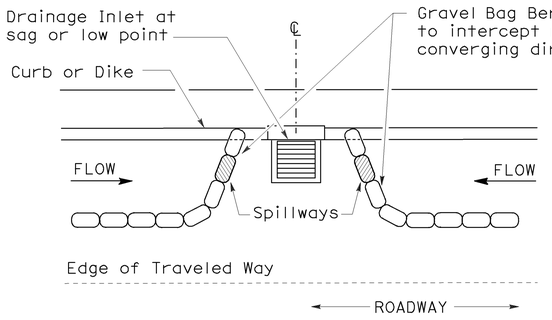

PLAN

CONFIGURATION FOR SAG POINT INLET (GRAVEL BAG BERM)

GRAVEL BAG BERM (TYPE 3A) SPACING TABLE

SLOPE OF ROADWAY (PERCENT)	1 to 3.9	4 to 5.9	6 to 7.9	8 to 10	10+
INTERVAL BETWEEN BERM	100′	75′	50′	25′	12′

For slope of less than 1%, install barriers only if erosion/sediment is prevalent

DIST	COUNTY	ROUTE	POST MILES TOTAL PROJECT	SHEET NO.	TOTAL SHEETS
03	Yol, Col	5	R21.5/R23.8,R27.0/ R28.9,R0.0/R21.0	71	87

Robert B Schott
LICENSED LANDSCAPE ARCHITECT

August 15, 2008
PLANS APPROVAL DATE

LICENSED LANDSCAPE ARCHITECT — Robert B. Schott 3835 — Signature — 11-04-08 Renewal Date — 08-11-08 Date — STATE OF CALIFORNIA

The State of California or its officers or agents shall not be responsible for the accuracy or completeness of electronic copies of this plan sheet.

To accompany plans dated 5-10-10

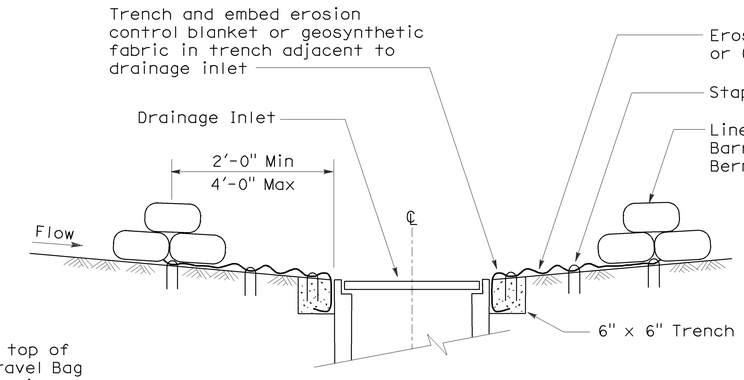

SECTION A-A

NOTES:

1. Place safety cones adjacent to drainage inlet protection.
2. Dimensions may vary to fit field conditions.
3. Install a minimum of 3 gravel bag berms upstream of each drainage inlet to be protected.
4. Position erosion control blanket or geosynthetic fabric at edge of concrete apron and secure in trench.
5. Erosion control blanket or geosynthetic fabric is not required if the area adjacent to the drainage inlet is vegetated or paved.

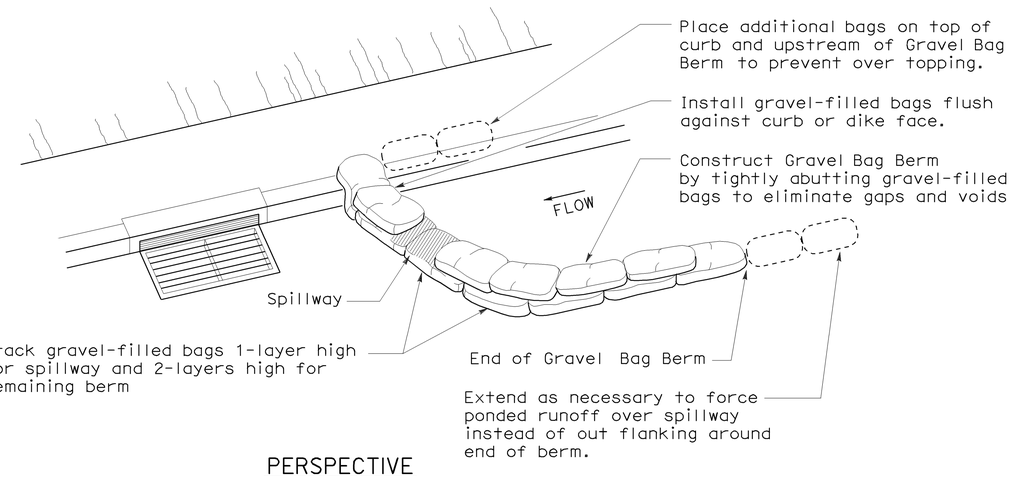

PERSPECTIVE

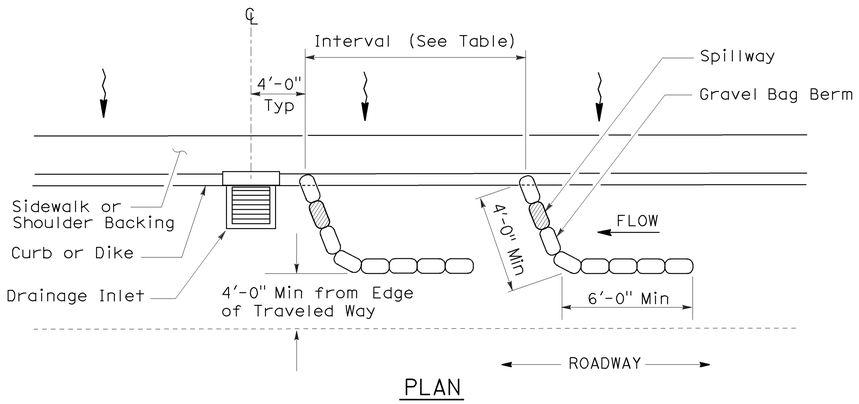

PLAN

TEMPORARY DRAINAGE INLET PROTECTION (TYPE 3A) (GRAVEL BAG BERM)

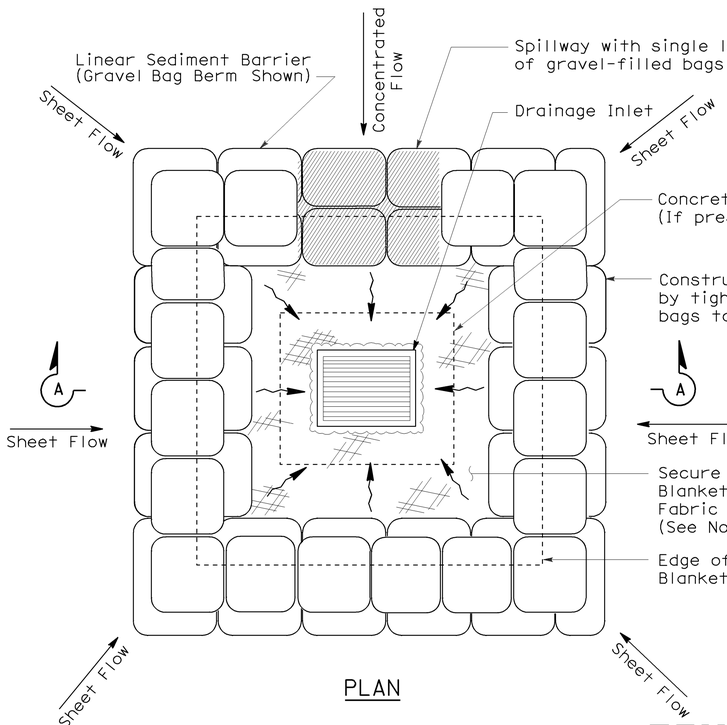

PLAN

TEMPORARY DRAINAGE INLET PROTECTION (TYPE 3B)

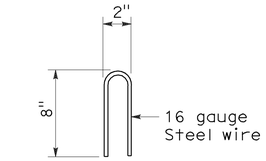

STAPLE DETAIL

STATE OF CALIFORNIA
DEPARTMENT OF TRANSPORTATION

TEMPORARY WATER POLLUTION CONTROL DETAILS (TEMPORARY DRAINAGE INLET PROTECTION)

NO SCALE

NSP T62 DATED AUGUST 15, 2008 SUPPLEMENTS THE STANDARD PLANS BOOK DATED MAY 2006.

NEW STANDARD PLAN NSP T62

2006 NEW STANDARD PLAN NSP T62

7-11-08

DIST	COUNTY	ROUTE	POST MILES TOTAL PROJECT	SHEET NO.	TOTAL SHEETS
03	Yol, Col	5	R21.5/R23.8,R27.0/R28.9,R0.0/R21.0	72	87

Robert B Schott
LICENSED LANDSCAPE ARCHITECT

August 15, 2008
PLANS APPROVAL DATE

The State of California or its officers or agents shall not be responsible for the accuracy or completeness of electronic copies of this plan sheet.

To accompany plans dated 5-10-10

FLEXIBLE SEDIMENT BARRIER SPACING TABLE

SLOPE OF ROADWAY (PERCENT)	0 to 0.9	1 to 1.9	2 to 2.9	3 to 4	5+
INTERVAL BETWEEN BARRIERS	50′	35′	30′	25′	20′
ANGLE FROM FACE OF CURB	70°	70°	70°	45°	45°
SUGGESTED BARRIER LENGTH	6′	6′	6′	6′	6′

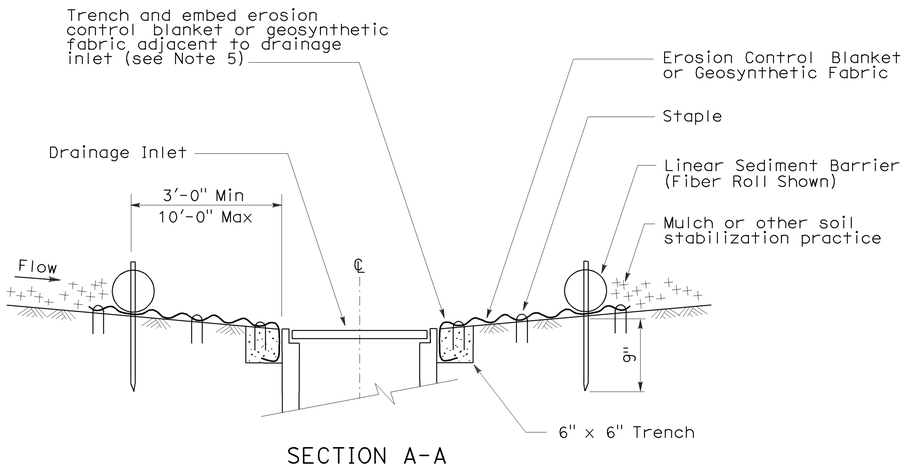

SECTION A-A

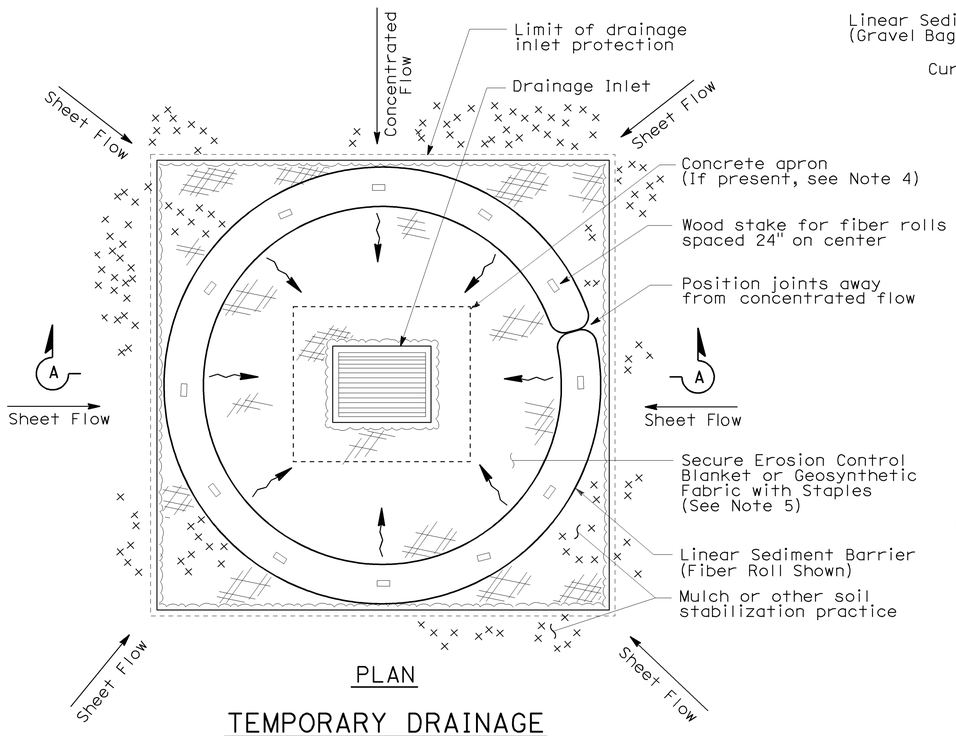

PLAN

TEMPORARY DRAINAGE INLET PROTECTION (TYPE 4A)

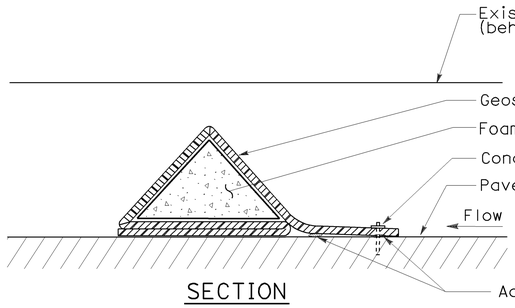

SECTION

FLEXIBLE SEDIMENT BARRIER DETAIL (FOAM BARRIER SHOWN)

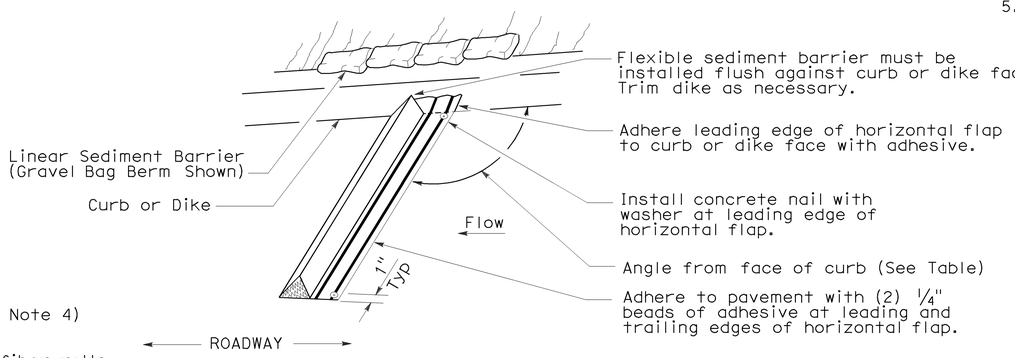

PERSPECTIVE

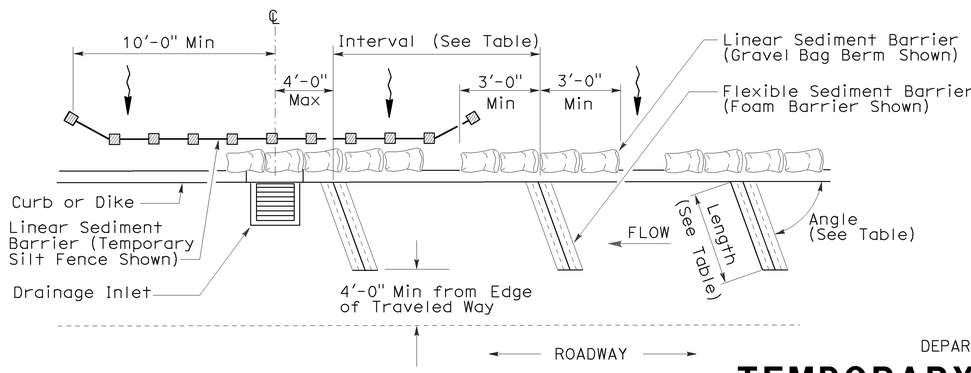

PLAN

TEMPORARY DRAINAGE INLET PROTECTION (TYPE 4B) FLEXIBLE SEDIMENT BARRIER

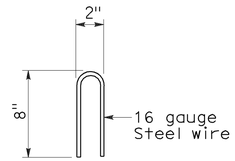

STAPLE DETAIL

NOTES:

1. See Standard Plan T51 for Temporary Silt Fence.
2. Dimensions may vary to fit field conditions.
3. Install a minimum of 3 flexible sediment barriers upstream of each drainage inlet to be protected.
4. Position erosion control blanket or geosynthetic fabric at edge of concrete apron and secure in trench.
5. Erosion control blanket or geosynthetic fabric is not required if the area adjacent to the drainage inlet is vegetated.

STATE OF CALIFORNIA
DEPARTMENT OF TRANSPORTATION

TEMPORARY WATER POLLUTION CONTROL DETAILS (TEMPORARY DRAINAGE INLET PROTECTION)

NO SCALE

NSP T63 DATED AUGUST 15, 2008 SUPPLEMENTS THE STANDARD PLANS BOOK DATED MAY 2006.

NEW STANDARD PLAN NSP T63

2006 NEW STANDARD PLAN NSP T63

7-11-08

DIST	COUNTY	ROUTE	POST MILES TOTAL PROJECT	SHEET NO.	TOTAL SHEETS
03	Yol, Col	5	R21.5/R23.8,R27.0/ R28.9,R0.0/R21.0	73	87

Robert B Schott
LICENSED LANDSCAPE ARCHITECT

August 15, 2008
PLANS APPROVAL DATE

LICENSED LANDSCAPE ARCHITECT
Robert B. Schott 3695
Signature
11-04-08
Renewal Date
08-11-08
Date
STATE OF CALIFORNIA

The State of California or its officers or agents shall not be responsible for the accuracy or completeness of electronic copies of this plan sheet.

To accompany plans dated 5-10-10

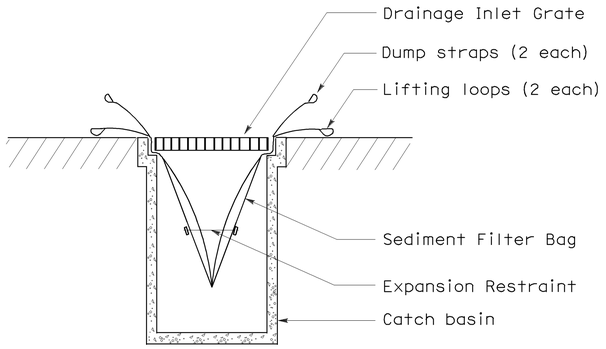

SECTION B-B

SEDIMENT FILTER BAG DETAIL

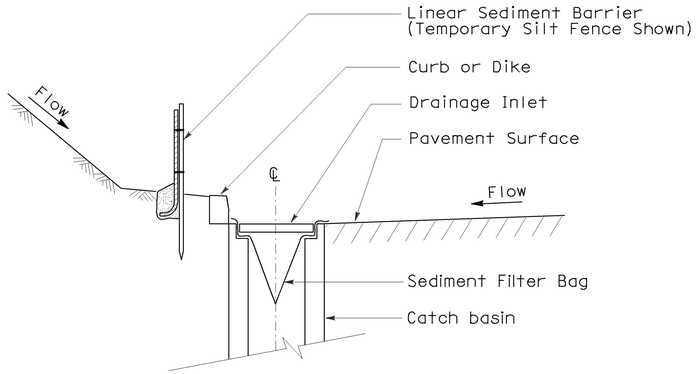

SECTION A-A

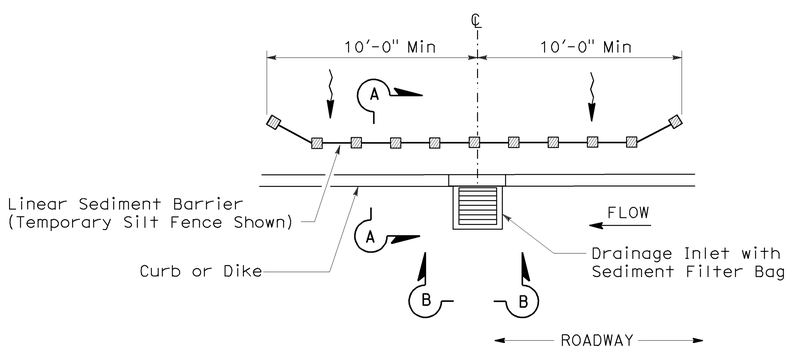

PLAN

TEMPORARY DRAINAGE INLET PROTECTION (TYPE 5) (SEDIMENT FILTER BAG)

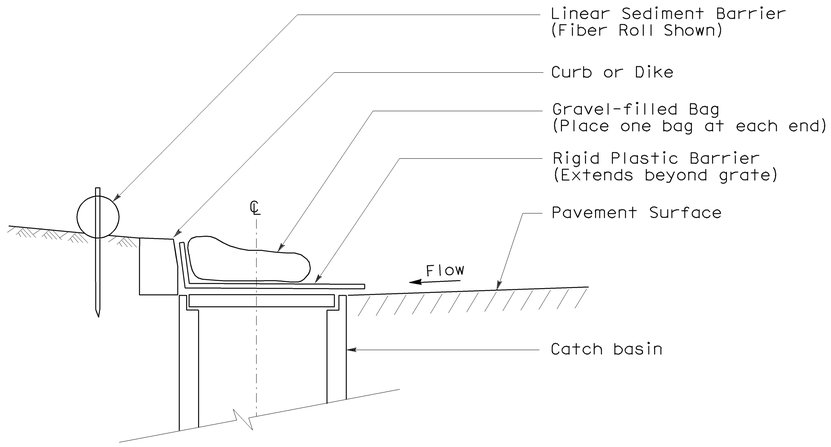

SECTION

TEMPORARY DRAINAGE INLET PROTECTION (TYPE 6A) (CATCH BASIN WITH GRATE)

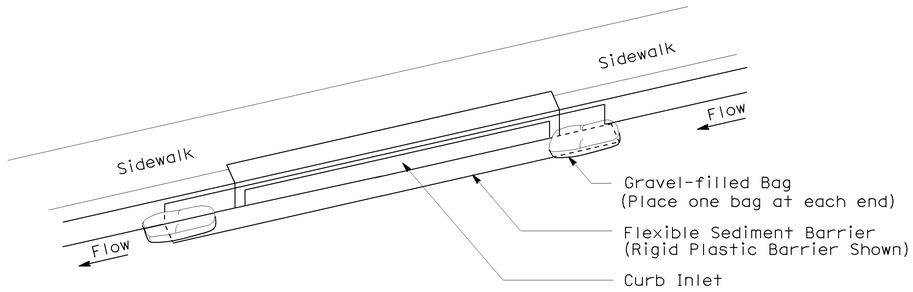

PERSPECTIVE

TEMPORARY DRAINAGE INLET PROTECTION (TYPE 6B) (CURB INLET WITHOUT GRATE)

NOTES:

1. See Standard Plan T51 for Temporary Silt Fence.
2. Dimensions may vary to fit field conditions.

STATE OF CALIFORNIA
DEPARTMENT OF TRANSPORTATION

TEMPORARY WATER POLLUTION CONTROL DETAILS (TEMPORARY DRAINAGE INLET PROTECTION)

NO SCALE

NSP T64 DATED AUGUST 15, 2008 SUPPLEMENTS
THE STANDARD PLANS BOOK DATED MAY 2006.

NEW STANDARD PLAN NSP T64

2006 NEW STANDARD PLAN NSP T64

7-11-08

DIST	COUNTY	ROUTE	POST MILES TOTAL PROJECT	SHEET NO.	TOTAL SHEETS
03	Yol, Col	5	R21.5/R23.8,R27.0/R28.9,R0.0/R21.0	74	87

Robert B Schott
LICENSED LANDSCAPE ARCHITECT

April 3, 2009
PLANS APPROVAL DATE

Robert B. Schott 3695 — LICENSED LANDSCAPE ARCHITECT — STATE OF CALIFORNIA
Signature Date 11-30-10
Renewal Date 2-25-09
Date

The State of California or its officers or agents shall not be responsible for the accuracy or completeness of electronic copies of this plan sheet.

To accompany plans dated 5-10-10

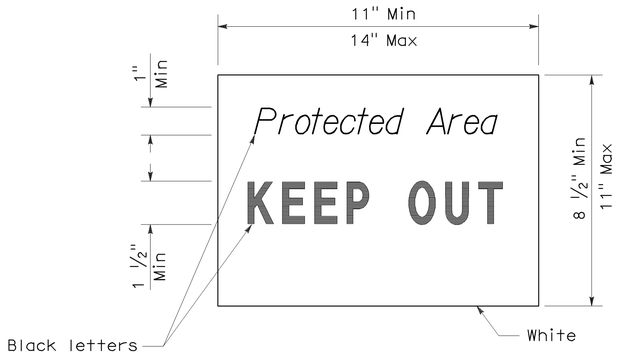

SIGN DETAIL

NOTE:

1. Temporary silt fence and temporary straw bale barrier shown for reference purposes only.

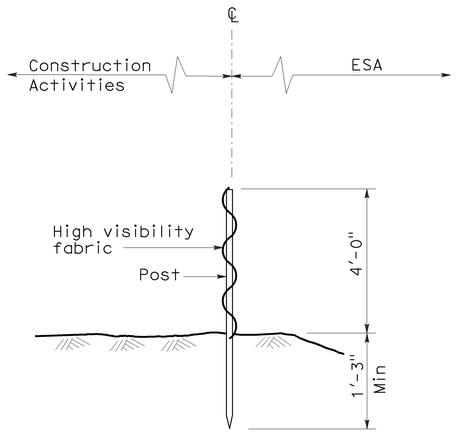

SECTION
TEMPORARY FENCE (TYPE ESA)

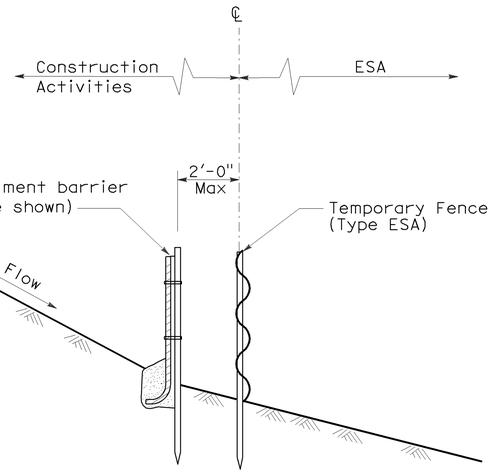

SECTION
PLACEMENT DETAIL
FOR TEMPORARY LINEAR SEDIMENT BARRIER
USED WITH TEMPORARY
FENCE (TYPE ESA)
(See Note 1)

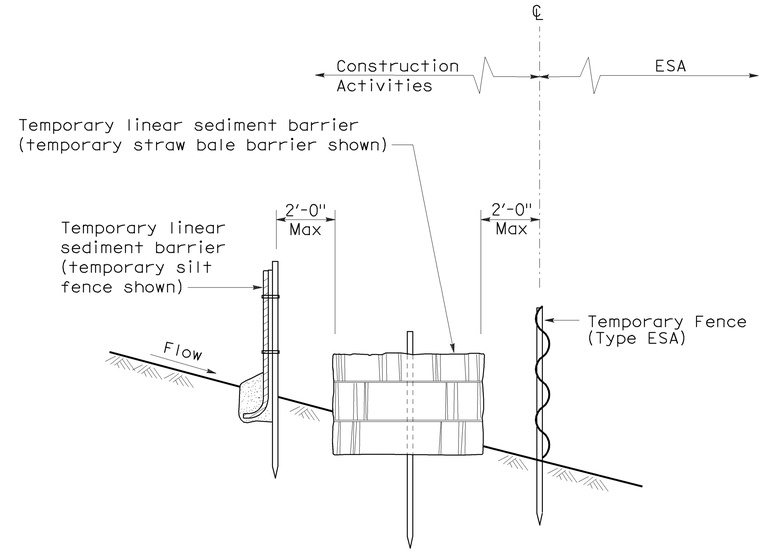

SECTION
PLACEMENT DETAIL
FOR TEMPORARY SILT FENCE
AND TEMPORARY STRAW BALE BARRIER
USED WITH TEMPORARY FENCE (TYPE ESA)
(See Note 1)

STATE OF CALIFORNIA
DEPARTMENT OF TRANSPORTATION

TEMPORARY WATER POLLUTION CONTROL DETAILS [TEMPORARY FENCE (TYPE ESA)]

NO SCALE

NSP T65 DATED APRIL 3, 2009 SUPPLEMENTS
THE STANDARD PLANS BOOK DATED MAY 2006.

NEW STANDARD PLAN NSP T65

2006 NEW STANDARD PLAN NSP T65

1-7-09

ELECTROLIERS

STANDARD TYPES
15, 15D
15 STRUCTURE
21, 21D STRUCTURE
30
31
32
35
36-20A

High mast light pole

Double Arm lighting standard

Existing electrolier

Electrolier foundation (Future installation)

NOTES:

1. Luminaires shall be 310 W HPS when installed on Type 21, 21D, 30, 31, 32, 35 and 36-20A Standards, unless otherwise specified. Luminaires shall be 200 W HPS when installed on other type standards or poles, unless otherwise specified.
2. Luminaires shall be the cutoff type, ANSI Type III medium cutoff lighting distribution, unless otherwise specified.
3. Variations noted adjacent to symbol on project plans.

Electrolier (see project notes or project plans)

Luminaire on wood pole

STANDARD NOTES:

- AB Abandon. If applied to conduit, remove conductors.
- BC Install pull box in existing conduit run.
- BP Pedestrian barricade, type as indicated on plan.
- CB Install conduit into existing pull box.
- CC Connect new and existing conduit. Remove existing conductors and install conductors as indicated.
- CF Conduit to remain for future use. Remove conductors. Install pull wire or rope.
- DH Detector handhole.
- FA Foundation to be abandoned.
- IS Install sign on signal mast arm.
- NS No slip base on standard.
- PEC Photoelectric control.
- PEU Photoelectric unit.
- RC Equipment or material to be removed and become the property of the Contractor.
- RE Remove electrolier, fuses and ballast. Tape ends of conductors.
- RL Relocate equipment.
- RR Remove and reuse equipment.
- RS Remove and salvage equipment.
- SC Splice new to existing conductors.
- SD Service disconnect.
- SF Standard to remain for future use. Remove luminaire, pole conductors, fuses and ballast.
- TSP Telephone service point.

ABBREVIATIONS AND EQUIPMENT DESIGNATIONS

PROPOSED	EXISTING	
BBS	bbs	Battery backup system
BC	bc	Bolt circle
C	C	Conduit
CCTV	cctv	Closed circuit television
CKT	ckt	Circuit
CMS	cms	Changeable message sign
DLC	dlc	Loop detector lead-in cable
EMS	ems	Extinguishable message sign
EVC	evc	Emergency vehicle cable
EVD	evd	Emergency vehicle detector
FB	fb	Flashing beacon
FBCA	fbca	Flashing beacon control assembly
FBS	fbs	Flashing beacon with slip base
FO	fo	Fiber optic
G	G	Ground (Equipment Grounding Conductor)
GFCI	GFCI	Ground fault circuit interrupt
HAR	har	Highway advisory radio
HEX	hex	Hexagonal
HPS	hps	High pressure sodium
IISNS	iisns	Internally illuminated street name sign
ISL	isl	Induction sign lighting
LED	led	Light emitting diode
LMA	lma	Luminaire mast arm
LPS	lps	Low pressure sodium
LTG	ltg	Lighting
LUM	lum	Luminaire
MAT	mat	Mast arm mounting vehicle signal faces, top attachment
MAS	mas	Mast arm mounting vehicle signal faces, side attachment
MAS-4A	mas-4A	Mast arm mounting vehicle signal faces,
MAS-4B	mas-4B	side attachment - 4 signal section
MAS-4C	mas-4C	
MAS-5A	mas-5A	Mast arm mounting vehicle signal faces,
MAS-5B	mas-5B	side attachment - 5 signal section
MC	mc	Mercury contactor
M/M	m/m	Multiple to multiple transformer
MT	mt	Conduit with pull wire or rope only
MTG	mtg	Mounting
	mv	Mercury vapor lighting fixture
N	N	Neutral (Grounded Conductor)
NC	NC	Normally closed
NO	NO	Normally open
PB	pb	Pull box
PEC	pec	Photoelectric control (Type I, II, III, IV or V as shown)
PED	ped	Pedestrian
PEU	peu	Photoelectric unit
PPB	ppb	Pedestrian push button
RL		Relocated equipment
RM	rm	Ramp metering
SB	sb	Slip base
SIC	sic	Signal interconnect cable
SIG	sig	Signal
SMA	sma	Signal mast arm
SNS	sns	Street name sign
SP	sp	Service point
TDC	tdc	Telephone demarcation cabinet
TMS	tms	Traffic monitoring station
TOS	tos	Traffic Operations System
VEH	veh	Vehicle
XFMR	xfmr	Transformer
COMM	comm	Communication
RWIS	rwis	Roadway weather information system

DIST	COUNTY	ROUTE	POST MILES TOTAL PROJECT	SHEET NO.	TOTAL SHEETS
03	Yol, Col	5	R21.5/R23.8,R27.0/ R28.9,R0.0/R21.0	75	87

Jeffery G. McRae
REGISTERED ELECTRICAL ENGINEER

Jeffery G. McRae
No. E14512
Exp. 6-30-08
ELECTRICAL
REGISTERED PROFESSIONAL ENGINEER
STATE OF CALIFORNIA

October 5, 2007
PLANS APPROVAL DATE

The State of California or its officers or agents shall not be responsible for the accuracy or completeness of electronic copies of this plan sheet.

To accompany plans dated 5-10-10

SOFFIT AND WALL MOUNTED LUMINAIRES

Pendant, 70 W HPS unless otherwise specified.

Flush, 70 W HPS unless otherwise specified.

Wall surface, 70 W HPS unless otherwise specified.

Existing soffit or wall luminaire to remain unmodified.

(M) Existing soffit or wall luminaire to be modified as specified.

NOTE:
Arrow indicates "street side" of luminaire.

STATE OF CALIFORNIA
DEPARTMENT OF TRANSPORTATION

ELECTRICAL SYSTEMS (SYMBOLS AND ABBREVIATIONS)

NO SCALE

RSP ES-1A DATED OCTOBER 5, 2007 SUPERSEDES STANDARD PLAN ES-1A
DATED MAY 1, 2006 - PAGE 400 OF THE STANDARD PLANS BOOK DATED MAY 2006.

REVISED STANDARD PLAN RSP ES-1A

2006 REVISED STANDARD PLAN RSP ES-1A

7-10-07

DIST	COUNTY	ROUTE	POST MILES TOTAL PROJECT	SHEET NO.	TOTAL SHEETS
03	Yol, Col	5	R21.5/R23.8,R27.0/ R28.9,R0.0/R21.0	76	87

Jeffery G. McRae
REGISTERED ELECTRICAL ENGINEER

October 5, 2007
PLANS APPROVAL DATE

REGISTERED PROFESSIONAL ENGINEER
Jeffery G. McRae
No. E14512
Exp. 6-30-08
ELECTRICAL
STATE OF CALIFORNIA

The State of California or its officers or agents shall not be responsible for the accuracy or completeness of electronic copies of this plan sheet.

To accompany plans dated 5-10-10

CONDUIT

PROPOSED	EXISTING	
— — —	— — —	Lighting Conduit, unless otherwise indicated or noted
— - — - —	— - — - —	Traffic signal conduit
—C— —	—c— —	Communication conduit
—T— —	—t— —	Telephone conduit
—F— —	—f— —	Fire alarm conduit
—FO— —	—fo— —	Fiber optic conduit
— — —]	— — —]	Conduit termination (RSP ES-9A C)
R	r	Conduit riser in/on structure or service pole

SERVICE EQUIPMENT

PROPOSED	EXISTING	
OH	oh	Overhead lines
U	U	Wood pole "U" indicates utility owned
		Pole guy with anchor
		Utility transformer - ground mounted
III		Service equipment enclosure type
		Service equipment enclosure door indicates front of enclosure
T	t	Telephone demarcation cabinet

POLE-MOUNTED SERVICE DESIGNATION

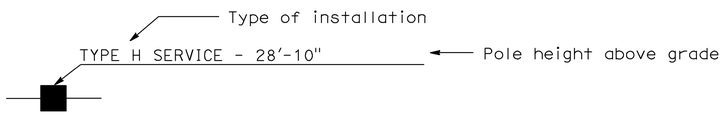

ILLUMINATED OVERHEAD SIGN

PROPOSED	EXISTING	
		Overhead sign - Single post
		Overhead sign - Two post
		Overhead sign - Mounted on structure
		Overhead sign with electrolier

SIGNAL EQUIPMENT

PROPOSED	EXISTING	
		Pedestrian signal face
		Pedestrian push button post
		Pedestrian barricade
		Vehicle signal face (with backplate, 3-Section: red, yellow and green)
		Vehicle signal face with angle visors
PV	PV	Modifications of basic symbols: "L" Indicates all non-arrow sections louvered "LG" Indicates louvered green section only "PV" Indicates 12" programmed visibility sections "8" indicates all 8" sections (only when specified)
		Type 15TS and Vehicle signal face
		Vehicle signal face with red, yellow and green left arrow sections
		Vehicle signal face with red and yellow sections and up green arrow
		Vehicle signal face (5 Section) with red, yellow and green sections and yellow and green right arrows
		Type 1 Standard and attached vehicle signal faces
		Standard with signal mast arm only and attached vehicle signal faces and internally illuminated street name sign
		Type 33 Standard, Left-turn vehicle signal face and sign
		Standard with luminaire and signal mast arms and attached vehicle signal faces
		Cantilever flashing beacon Type 9 Frame, with a sign unless otherwise specified or indicated
		Type 15-FBS Standard with two vehicle signal face sections with lens, backplate and visor with a sign
R	Y	Flashing beacon. One vehicle signal face section with lens, backplate and visor. "R" indicates red indication, "Y" indicates yellow indication
		Controller assembly. Door indicates front of cabinet

SIGNAL EQUIPMENT Cont

PROPOSED	EXISTING	
		Guard post
		Type 1 Standard with "Meter On" sign
		Emergency Vehicle detector

NOTES:

1. All signal sections shall be 12" unless shown otherwise.
2. Signal heads shall be provided with backplates unless shown otherwise.
3. Signal indication shall be LED.

STATE OF CALIFORNIA
DEPARTMENT OF TRANSPORTATION

ELECTRICAL SYSTEMS (SYMBOLS AND ABBREVIATIONS)

NO SCALE

RSP ES-1B DATED OCTOBER 5, 2007 SUPERCEDES STANDARD PLAN ES-1B DATED MAY 1, 2006 - PAGE 401 OF THE STANDARD PLANS BOOK DATED MAY 2006.

REVISED STANDARD PLAN RSP ES-1B

2006 REVISED STANDARD PLAN RSP ES-1B

7-10-07

DIST	COUNTY	ROUTE	POST MILES TOTAL PROJECT	SHEET NO.	TOTAL SHEETS
03	Yol, Col	5	R21.5/R23.8,R27.0/ R28.9,R0.0/R21.0	77	87

Jeffery G. McRae
REGISTERED ELECTRICAL ENGINEER

October 5, 2007
PLANS APPROVAL DATE

REGISTERED PROFESSIONAL ENGINEER — Jeffery G. McRae — No. E14512 — Exp. 6-30-08 — ELECTRICAL — STATE OF CALIFORNIA

The State of California or its officers or agents shall not be responsible for the accuracy or completeness of electronic copies of this plan sheet.

To accompany plans dated 5-10-10

EQUIPMENT IDENTIFICATION

ILLUMINATED SIGN IDENTIFICATION NUMBER:

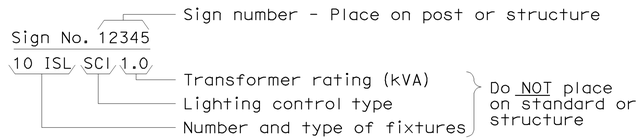

ELECTROLIER OR EQUIPMENT IDENTIFICATION NUMBER:

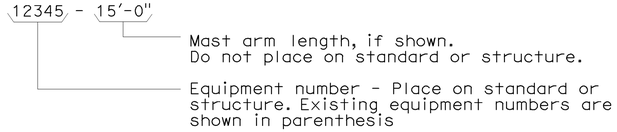

CONDUIT AND CONDUCTOR IDENTIFICATION:

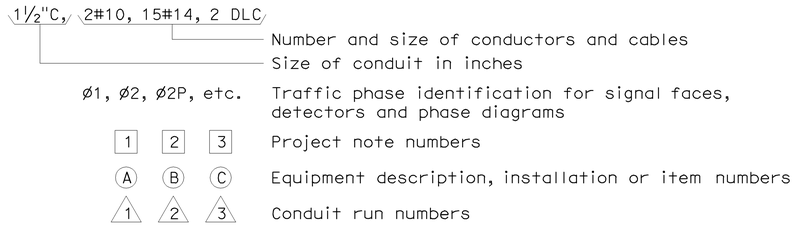

SIGNAL AND LIGHTING STANDARD (TYPICAL DESIGNATION):

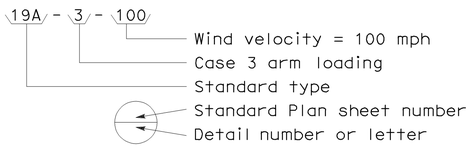

WIRING DIAGRAM LEGEND

P	Pole
CB	Circuit breaker
A	Ampere
V	Volt
M	Metered
UM	Unmetered
NB	Neutral bus
GB	Ground bus
G	Equipment grounding conductor
N	Grounded conductor (Neutral)

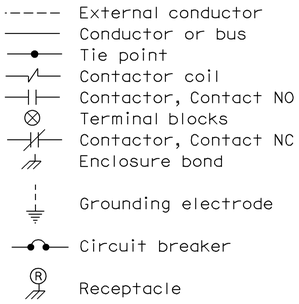

PULL BOXES

PROPOSED EXISTING

Pull box-No. 5 unless otherwise indicated or noted.

Pull box-Additional designations or descriptions

(C) = Communications pull box
(E) = Pull box with extension
(S) = Sprinkler control pull box
(21) = Anchor bolts and conduit for future installation of Type 21 Standard
(T) = Traffic pull box

3 = No. 3½ pull box
5 = No. 5 pull box
6 = No. 6 pull box
7 = No. 7 (Ceiling pull box)
8 = No. 8 (Pendant soffit pull box)
9 = No. 9 pull box
9A = No. 9A pull box

VEHICLE DETECTORS

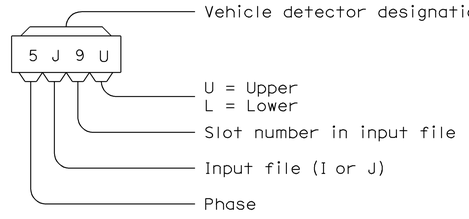

PROPOSED EXISTING

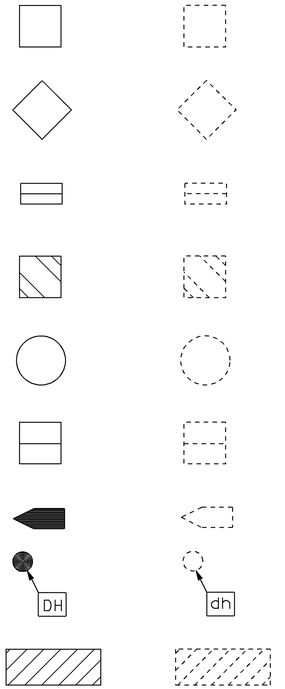

MISCELLANEOUS EQUIPMENT

PROPOSED EXISTING

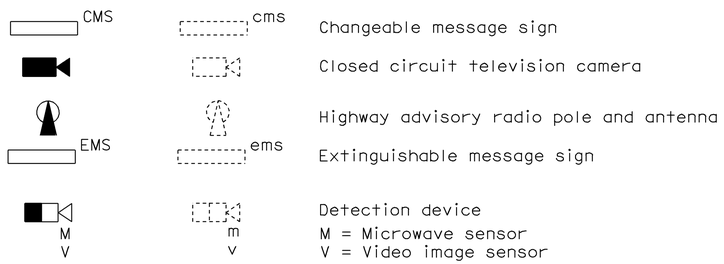

STATE OF CALIFORNIA
DEPARTMENT OF TRANSPORTATION

ELECTRICAL SYSTEMS (SYMBOLS AND ABBREVIATIONS)

NO SCALE

RSP ES-1C DATED OCTOBER 5, 2007 SUPERCEDES STANDARD PLAN ES-1C
DATED MAY 1, 2006 - PAGE 402 OF THE STANDARD PLANS BOOK DATED MAY 2006.

REVISED STANDARD PLAN RSP ES-1C

2006 REVISED STANDARD PLAN RSP ES-1C

7-10-07

DIST	COUNTY	ROUTE	POST MILES TOTAL PROJECT	SHEET No	TOTAL SHEETS
03	Yol,Col	5	R21.5/R23.8 R27.0/R28.9 R0/R21.0	78	87

Mahfoud A Licha 5/11/10
REGISTERED CIVIL ENGINEER DATE

5-10-10
PLANS APPROVAL DATE

REGISTERED PROFESSIONAL ENGINEER MAHFOUD A. LICHA No. C62816 Exp. 6/30/10 CIVIL STATE OF CALIFORNIA

The State of California or its officers or agents shall not be responsible for the accuracy or completeness of electronic copies of this plan sheet.

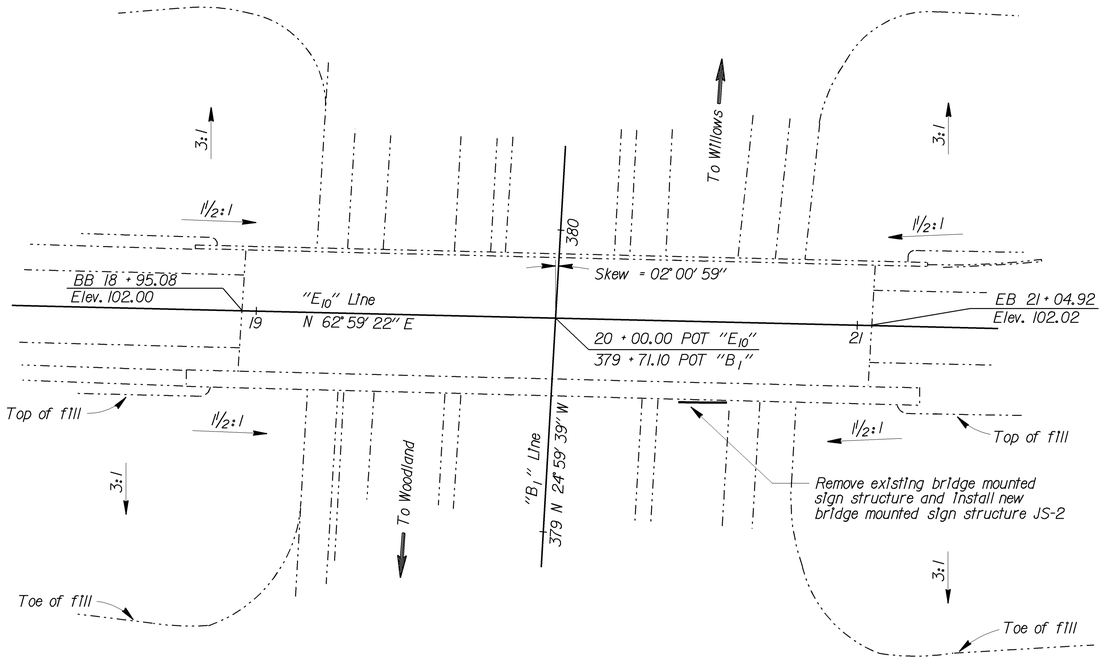

LOCATION PLAN
NO SCALE

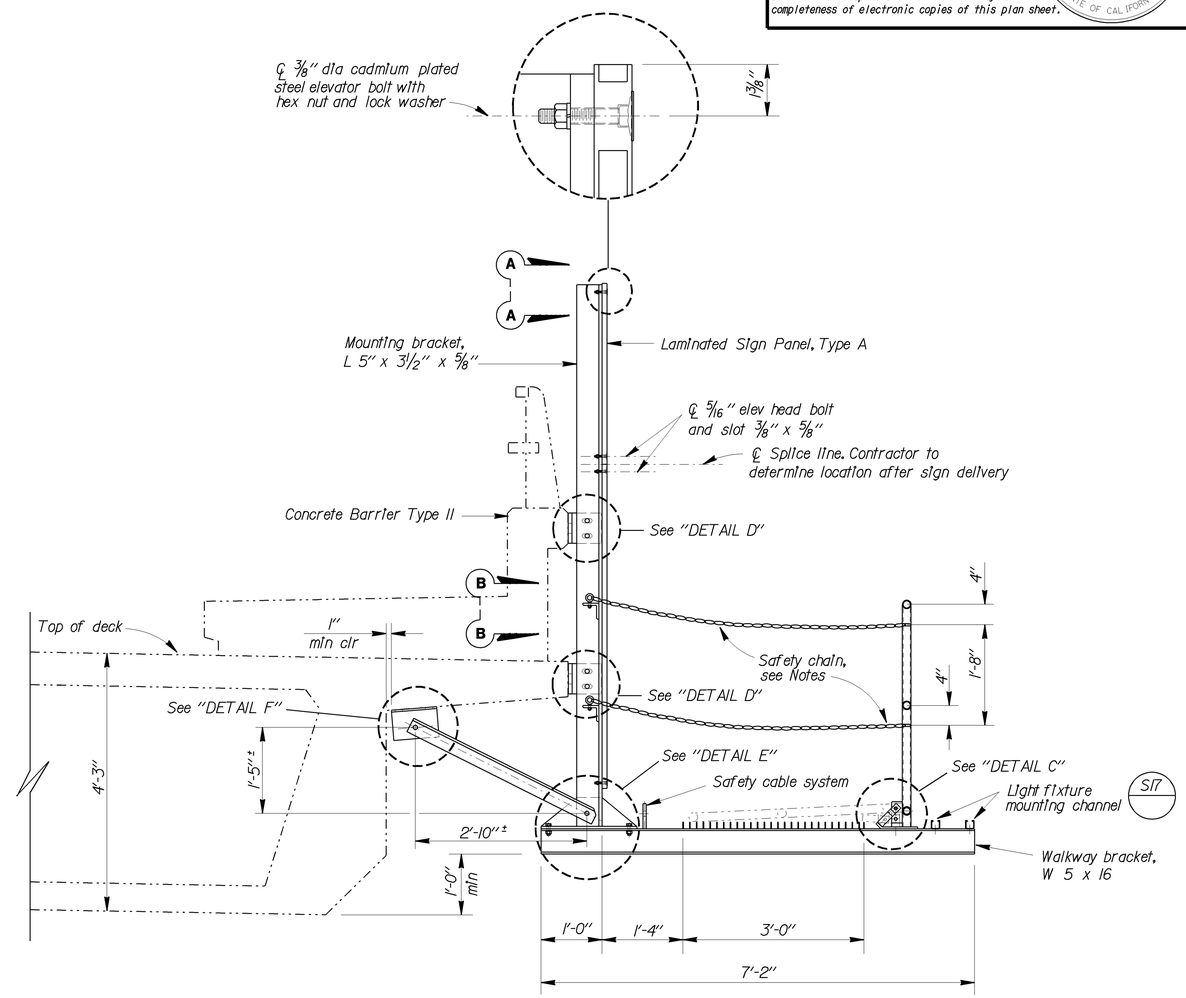

TYPICAL SECTION
NO SCALE

LEGEND

1. For sign location, see "SIGN PLANS".
2. For details not shown, see "STANDARD PLANS MAY 2006".
3. All steel shall be galvanized after fabrication.
4. Minimum size fillet weld is 1/4" or thickness of thinner part unless noted otherwise.
5. Contractor to provide anchor bolt layout before anchor bolts are placed.
6. All high strength (HS) bolts shall be snug tight.
7. Special care shall be taken to insure that the complete hinge and latch assembly will hold the safety railing in a steady manner, free of wobble while in the raised position. Maximum allowable displacement from vertical at top of railing when latched shall be 1".
8. Safety chain shall be 1/4" galvanized steel coil chain, approximately 12 links per foot. Length shall be minimum which allows lock-up of safety railing. Minimum of two safety chains at each end of safety railing. Material shall be Grade 43 high test chain ASTM A413.
9. For "DETAIL C", "SECTION A-A", and "SECTION B-B", see "TYPICAL DETAILS NO.1" sheet.
10. For "DETAIL D", "DETAIL E", and "DETAIL F", see "TYPICAL DETAILS NO.2".
11. Sign location may vary slightly. Engineer to approve location.

LEGEND

Existing structure
New installation

STANDARD PLANS DATED MAY, 2006

A10A ACRONYMS AND ABBREVIATIONS (SHEET 1 OF 2)
A10B ACRONYMS AND ABBREVIATIONS (SHEET 2 OF 2)

NOTE:
THE CONTRACTOR SHALL VERIFY ALL CONTROLLING FIELD DIMENSIONS BEFORE ORDERING OR FABRICATING ANY MATERIAL.

STANDARD PLAN SHEET NO.
DETAIL NO.

BRANCH CHIEF	DESIGN	BY MAHFOUD LICHA	CHECKED ARLENA GUTIERREZ	STATE OF CALIFORNIA DEPARTMENT OF TRANSPORTATION	DIVISION OF ENGINEERING SERVICES DESIGN AND TECHNICAL SERVICES SPECIAL DESIGNS BRANCH A	BRIDGE NO. 15-0067 POST MILE R18.0	"E" STREET OVERCROSSING BRIDGE MOUNTED SIGN LOCATION PLAN AND TYPICAL SECTION	SDS-1
Jeffrey B Woody	DETAILS	BY R. YEE	CHECKED MAHFOUD LICHA					
	QUANTITIES	BY	CHECKED					

(ENGLISH) SPECIAL DESIGNS BRANCH BORDER SHEET (REV. 7-1-09)

ORIGINAL SCALE IN INCHES FOR REDUCED PLANS 0 1 2 3

CU 03
EA 3C8901

DISREGARD PRINTS BEARING EARLIER REVISION DATES

REVISION DATES 3/29/10 4/26/10 5/11/10

SHEET OF

FILE => /2010sd/03-3C8901/sds1.dgn

USERNAME => ryee DATE PLOTTED => 11-MAY-2010 TIME PLOTTED => 09:46

DIST	COUNTY	ROUTE	POST MILES TOTAL PROJECT	SHEET No	TOTAL SHEETS
03	Yol,Col	5	R21.5/R23.8 R27.0/R28.9 R0/R21.0	79	87

Mahfoud A. Licha
REGISTERED CIVIL ENGINEER DATE

5-10-10
PLANS APPROVAL DATE

REGISTERED PROFESSIONAL ENGINEER
MAHFOUD A. LICHA
No. C62816
Exp. 6/30/10
CIVIL
STATE OF CALIFORNIA

The State of California or its officers or agents shall not be responsible for the accuracy or completeness of electronic copies of this plan sheet.

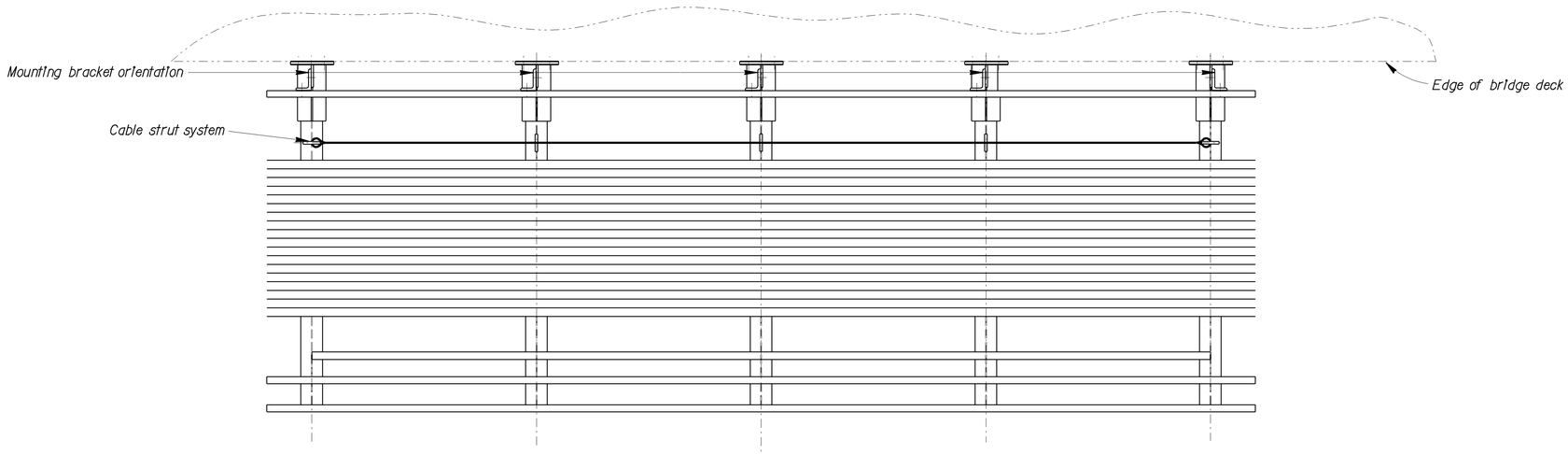

PLAN VIEW

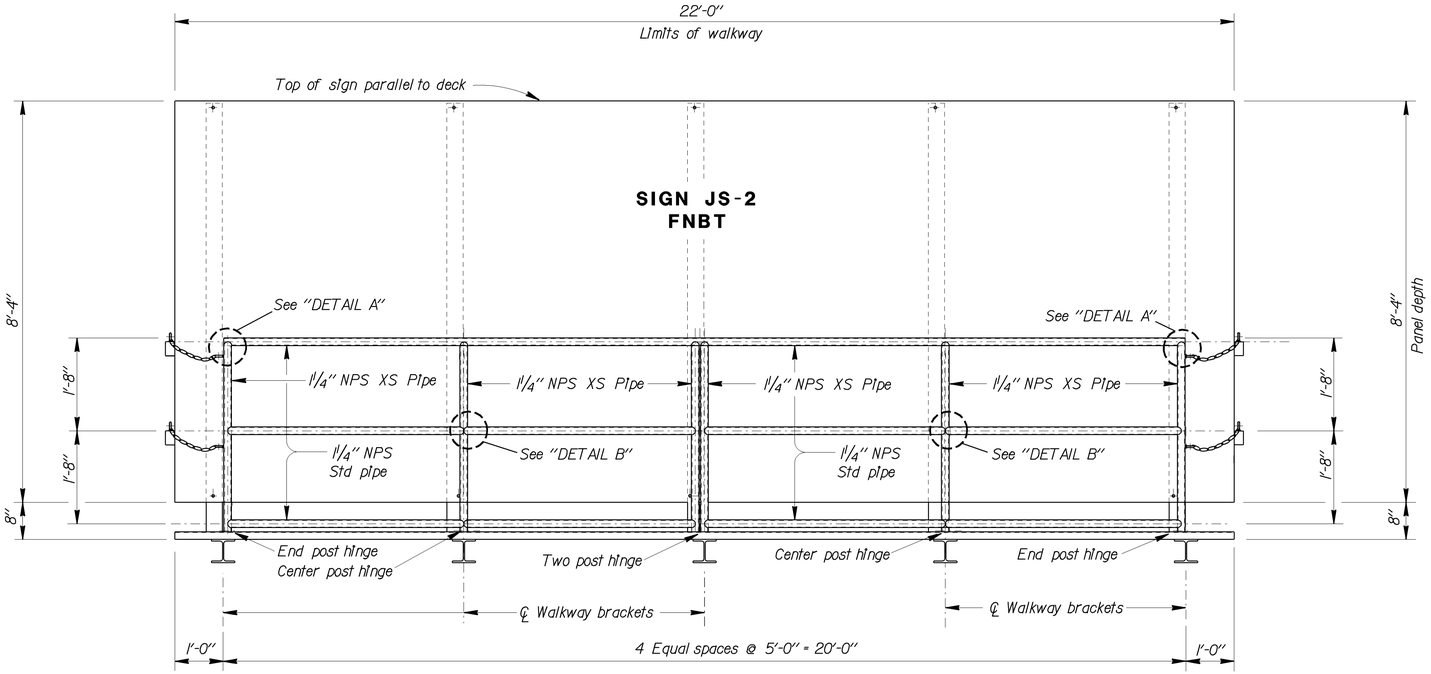

FRONT VIEW

NOTE:
THE CONTRACTOR SHALL VERIFY ALL CONTROLLING FIELD DIMENSIONS BEFORE ORDERING OR FABRICATING ANY MATERIAL.

BRANCH CHIEF Jeffrey B Woody	DESIGN	BY MAHFOUD LICHA	CHECKED ARLENA GUTIERREZ
	DETAILS	BY R.YEE	CHECKED MAHFOUD LICHA
	QUANTITIES	BY	CHECKED

STATE OF CALIFORNIA
DEPARTMENT OF TRANSPORTATION

DIVISION OF ENGINEERING SERVICES
DESIGN AND TECHNICAL SERVICES
SPECIAL DESIGNS BRANCH A

BRIDGE NO. 15-0067
POST MILE R18.0

"E" STREET OVERCROSSING
BRIDGE MOUNTED SIGN ELEVATION DETAILS

SDS-2

(ENGLISH) SPECIAL DESIGNS BRANCH BORDER SHEET (REV. 7-1-09)

ORIGINAL SCALE IN INCHES FOR REDUCED PLANS 0 1 2 3

CU 03
EA 3C8901

FILE => /2010sd/03-3C8901/sds2.dgn

DISREGARD PRINTS BEARING EARLIER REVISION DATES →

REVISION DATES										SHEET	OF
5/10/10	5/11/10										

DATE PLOTTED => 11-MAY-2010 TIME PLOTTED => 09:48
USERNAME => ryee

DIST	COUNTY	ROUTE	POST MILES TOTAL PROJECT	SHEET No	TOTAL SHEETS
03	Yol,Col	5	R21.5/R23.8 R27.0/R28.9 R0/R21.0	80	87

Mahfoud A Licha
REGISTERED CIVIL ENGINEER DATE

5-10-10
PLANS APPROVAL DATE

REGISTERED PROFESSIONAL ENGINEER
MAHFOUD A. LICHA
No. C62816
Exp. 6/30/10
CIVIL
STATE OF CALIFORNIA

The State of California or its officers or agents shall not be responsible for the accuracy or completeness of electronic copies of this plan sheet.

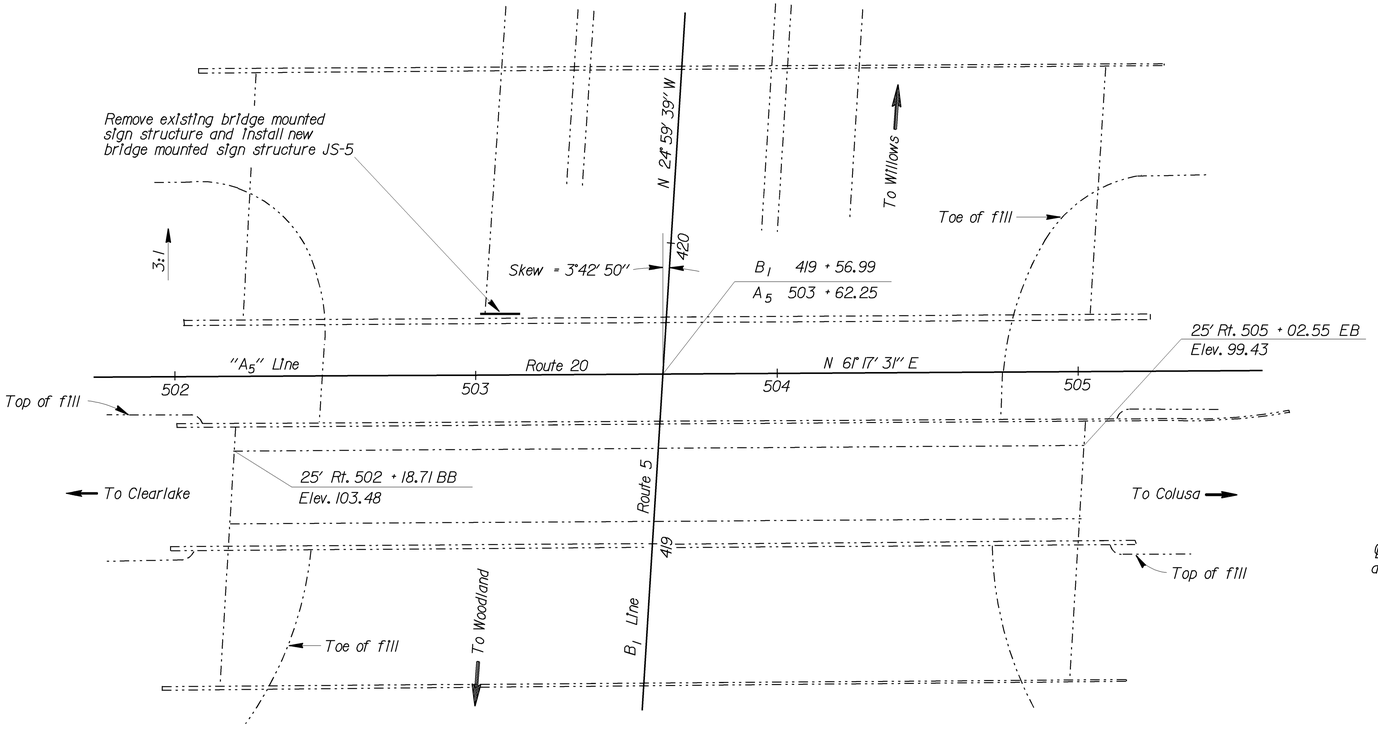

LOCATION PLAN
NO SCALE

NOTES:

1. For sign location, see "SIGN PLANS".
2. For details not shown, see "STANDARD PLANS MAY 2006".
3. All steel shall be galvanized after fabrication.
4. Minimum size fillet weld is 1/4" or thickness of thinner part unless noted otherwise.
5. Contractor to provide anchor bolt layout before anchor bolts are placed.
6. All high strength (HS) bolts shall be snug tight.
7. Special care shall be taken to insure that the complete hinge and latch assembly will hold the safety railing in a steady manner, free of wobble while in the raised position. Maximum allowable displacement from vertical at top of railing when latched shall be 1".
8. Safety chain shall be 1/4" galvanized steel coil chain, approximately 12 links per foot. Length shall be minimum which allows lock-up of safety railing. Minimum of two safety chains at each end of safety railing. Material shall be Grade 43 high test chain ASTM A413.
9. For "DETAIL C","SECTION A-A", and "SECTION B-B", see "TYPICAL DETAILS NO.1" sheet.
10. For "DETAIL D", "DETAIL E", and "DETAIL F", see "TYPICAL DETAILS NO.2".
11. Sign location may vary slightly. Engineer to approve location.

NOTE:
THE CONTRACTOR SHALL VERIFY ALL CONTROLLING FIELD DIMENSIONS BEFORE ORDERING OR FABRICATING ANY MATERIAL.

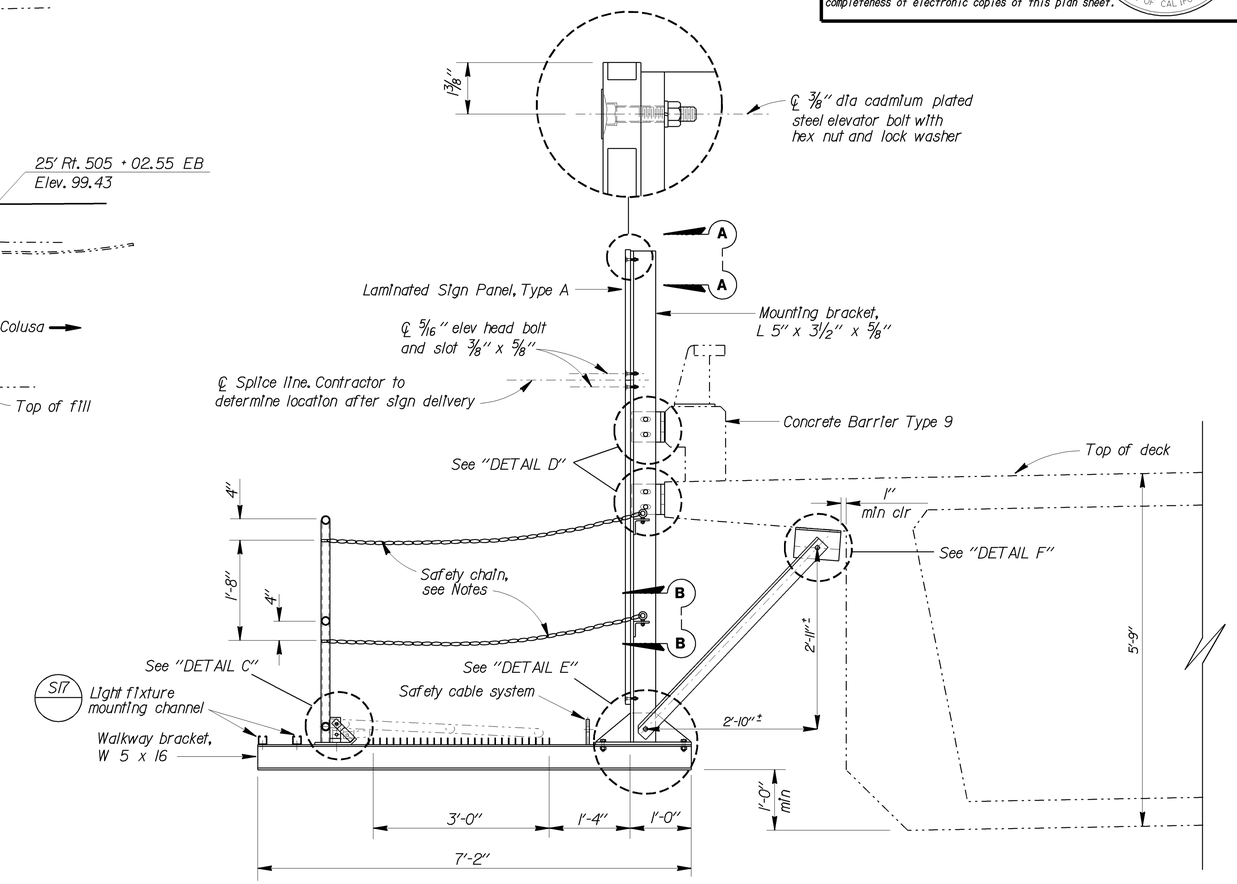

TYPICAL SECTION
NO SCALE

LEGEND

Existing structure

New Installation

STANDARD PLANS DATED MAY, 2006

A10A ACRONYMS AND ABBREVIATIONS (SHEET 1 OF 2)
A10B ACRONYMS AND ABBREVIATIONS (SHEET 2 OF 2)

STANDARD PLAN SHEET NO.

DETAIL NO.

BRANCH CHIEF Geoffrey B Woody	DESIGN	BY MAHFOUD LICHA	CHECKED ARLENA GUTIERREZ
	DETAILS	BY R. YEE	CHECKED MAHFOUD LICHA
	QUANTITIES	BY	CHECKED

STATE OF CALIFORNIA
DEPARTMENT OF TRANSPORTATION

DIVISION OF ENGINEERING SERVICES
DESIGN AND TECHNICAL SERVICES
SPECIAL DESIGNS BRANCH A

BRIDGE NO. 15-0078
POST MILE R18.7

ROUTE 20/5 SEPARATION
BRIDGE MOUNTED SIGN LOCATION PLAN AND TYPICAL SECTION

SDS-3

(ENGLISH) SPECIAL DESIGNS BRANCH BORDER SHEET (REV. 7-1-09)

ORIGINAL SCALE IN INCHES FOR REDUCED PLANS 0 1 2 3

CU 03
EA 3C8901

FILE => /2010sd/03-3C8901/sds3.dgn

DISREGARD PRINTS BEARING EARLIER REVISION DATES

REVISION DATES										SHEET	OF
3/30/10	3/30/10	5/11/10									

DATE PLOTTED => 11-MAY-2010 TIME PLOTTED => 09:51
USERNAME => ryee

DIST	COUNTY	ROUTE	POST MILES TOTAL PROJECT	SHEET No	TOTAL SHEETS
03	Yol,Col	5	R21.5/R23.8 R27.0/R28.9 R0/R21.0	81	87

Mahfoud A. Licha 5/11/10
REGISTERED CIVIL ENGINEER DATE

5-10-10
PLANS APPROVAL DATE

REGISTERED PROFESSIONAL ENGINEER
MAHFOUD A. LICHA
No. C62816
Exp. 6/30/10
CIVIL
STATE OF CALIFORNIA

The State of California or its officers or agents shall not be responsible for the accuracy or completeness of electronic copies of this plan sheet.

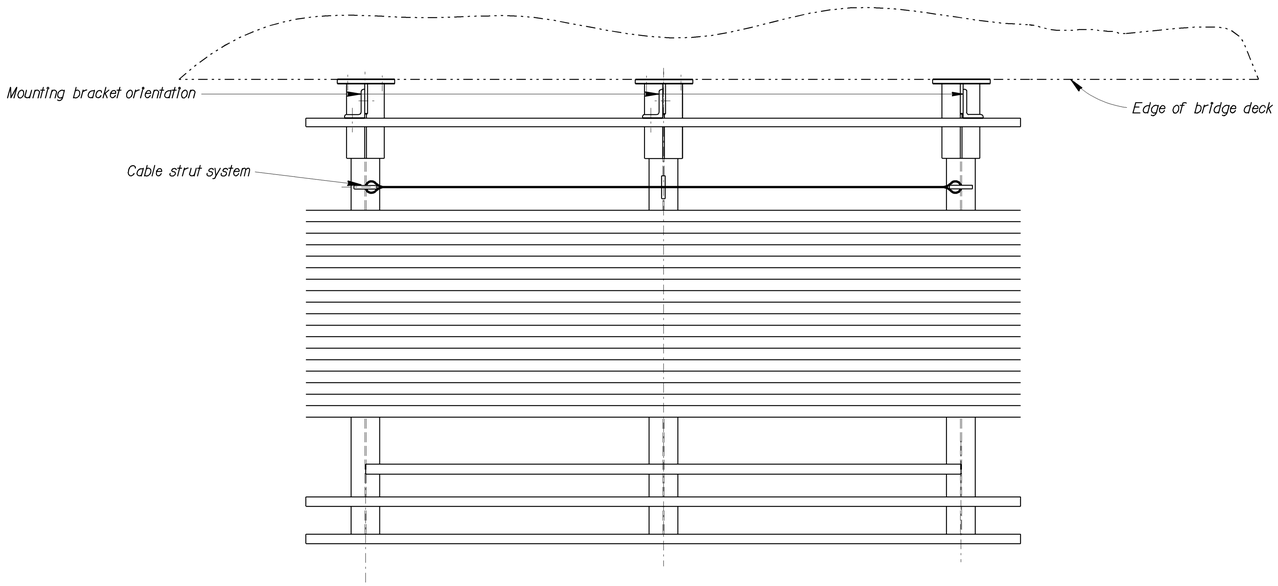

PLAN VIEW
NO SCALE

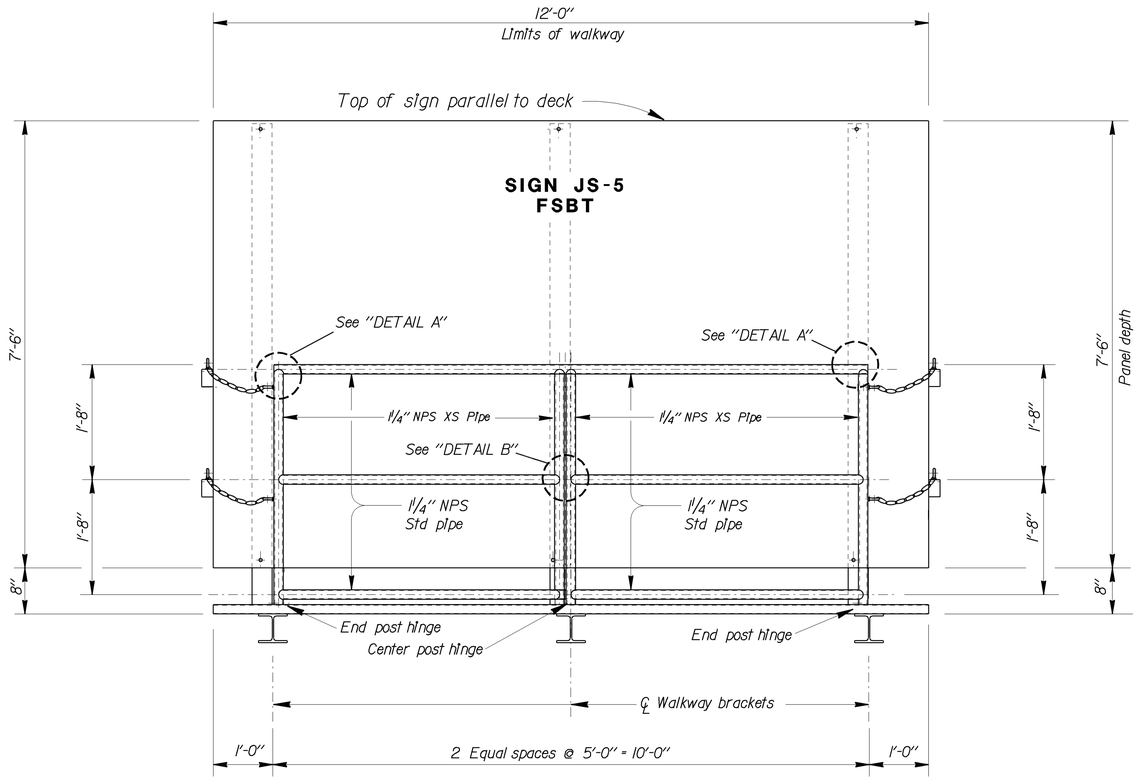

FRONT VIEW
NO SCALE

NOTE:
THE CONTRACTOR SHALL VERIFY ALL CONTROLLING FIELD DIMENSIONS BEFORE ORDERING OR FABRICATING ANY MATERIAL.

BRANCH CHIEF Jeffrey B Woody

	BY	CHECKED
DESIGN	MAHFOUD LICHA	ARLENA GUTIERREZ
DETAILS	R. YEE	MAHFOUD LICHA
QUANTITIES		

STATE OF CALIFORNIA
DEPARTMENT OF TRANSPORTATION

DIVISION OF ENGINEERING SERVICES
DESIGN AND TECHNICAL SERVICES
SPECIAL DESIGNS BRANCH A

BRIDGE NO. 15-0078
POST MILE R18.7

ROUTE 20/5 SEPARATION
BRIDGE MOUNTED SIGN ELEVATION DETAILS

SDS-4

(ENGLISH) SPECIAL DESIGNS BRANCH BORDER SHEET (REV. 7-1-09)

ORIGINAL SCALE IN INCHES FOR REDUCED PLANS 0 1 2 3

CU 03
EA 3C8901

DISREGARD PRINTS BEARING EARLIER REVISION DATES →

REVISION DATES: 3/26/10 4/29/10 5/11/10

SHEET OF

FILE => /2010sd/03-3C8901/sds4.dgn

USERNAME => ryee DATE PLOTTED => 11-MAY-2010 TIME PLOTTED => 09:52

DIST	COUNTY	ROUTE	POST MILES TOTAL PROJECT	SHEET No	TOTAL SHEETS
03	Yol, Col	5	R21.5/R23.8 R27.0/R28.9 R0/R21.0	82	87

REGISTERED CIVIL ENGINEER — DATE 5/11/10

5-10-10
PLANS APPROVAL DATE

REGISTERED PROFESSIONAL ENGINEER — ANDREW BUI — No. C63560 — Exp. 9/30/10 — CIVIL — STATE OF CALIFORNIA

The State of California or its officers or agents shall not be responsible for the accuracy or completeness of electronic copies of this plan sheet.

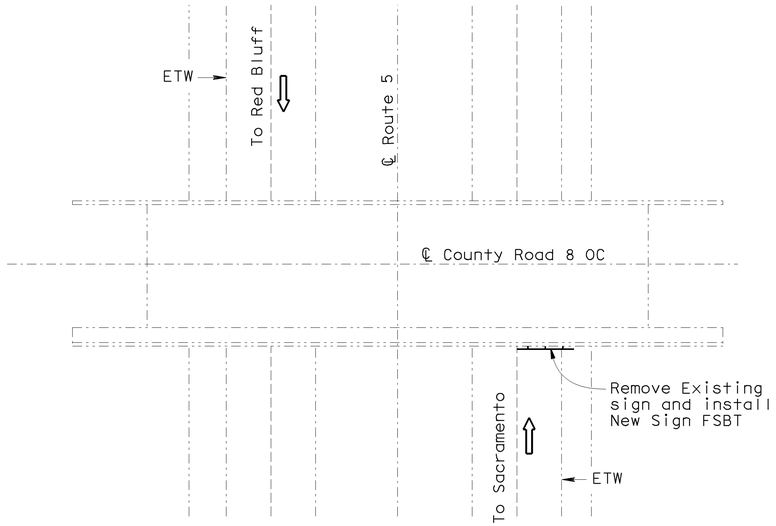

LOCATION PLAN
No Scale

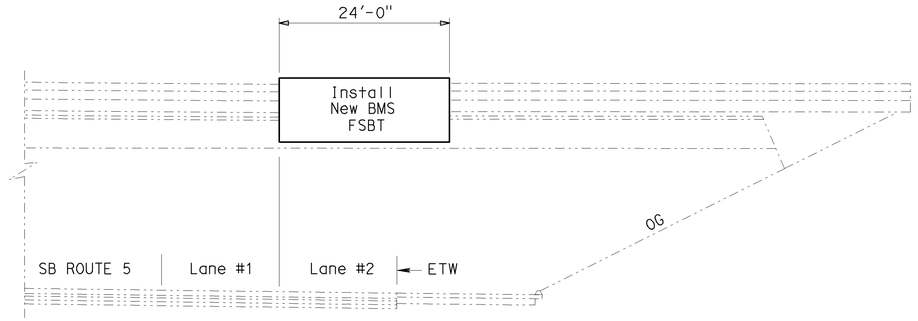

EB ELEVATION
County Road 8 OC
22-0030
No Scale

LEGEND

Existing structure.

New structure.

STANDARD PLANS DATED MAY 2006

A10A ACRONYMS AND ABBREVIATIONS (SHEET 1 OF 2)
A10B ACRONYMS AND ABBREVIATIONS (SHEET 2 OF 2)

Notes:

1. For details not shown, see "STANDARD PLANS MAY 2006".
2. Unless otherwise shown, all steel shall be galvanized after fabrication.
3. Min size fillet weld is 1/4" or thickness of thinner part unless noted otherwise.
4. Contractor to provide anchor bolt layout before anchor bolts are placed.
5. For sign location, see "PAVEMENT DELINEATION AND SIGN PLANS".
6. Minimum verticle clearance of sign structure to be 18'-0".

NOTE:
THE CONTRACTOR SHALL VERIFY ALL CONTROLLING FIELD DIMENSIONS BEFORE ORDERING OR FABRICATING ANY MATERIAL.

		BY	CHECKED
BRANCH CHIEF Jeffrey B Woody	DESIGN	R HEZAR	A GUTIERREZ
	DETAILS	D W JUSTICE Jr	R HEZAR
	QUANTITIES	R HEZAR	A GUTIERREZ

STATE OF CALIFORNIA
DEPARTMENT OF TRANSPORTATION

DIVISION OF ENGINEERING SERVICES
DESIGN AND TECHNICAL SERVICES
SPECIAL DESIGNS BRANCH A

BRIDGE NO. 22-0030
POST MILE R23.8

COUNTY ROAD 8 OC
SIGN LOCATION PLAN

SDS-5

(ENGLISH) SPECIAL DESIGNS BRANCH BORDER SHEET (REV. 7-1-09)

ORIGINAL SCALE IN INCHES FOR REDUCED PLANS 0 1 2 3

CU 03
EA 3C8901

DISREGARD PRINTS BEARING EARLIER REVISION DATES →

REVISION DATES: 3-12-10 | 4-29-10 | 5/11/10

SHEET OF

FILE => spec_des_br_prj/2010sd/03-3C8901/sds-5.dgn

USERNAME => ryee DATE PLOTTED => 11-MAY-2010 TIME PLOTTED => 10:04

DIST	COUNTY	ROUTE	POST MILES TOTAL PROJECT	SHEET No	TOTAL SHEETS
03	Yol, Col	5	R21.5/R23.8 R27.0/R28.9 R0/R21.0	83	87

REGISTERED CIVIL ENGINEER — 5/11/10 DATE

5-10-10
PLANS APPROVAL DATE

ANDREW BUI
No. C63560
Exp. 9/30/10
CIVIL
REGISTERED PROFESSIONAL ENGINEER
STATE OF CALIFORNIA

The State of California or its officers or agents shall not be responsible for the accuracy or completeness of electronic copies of this plan sheet.

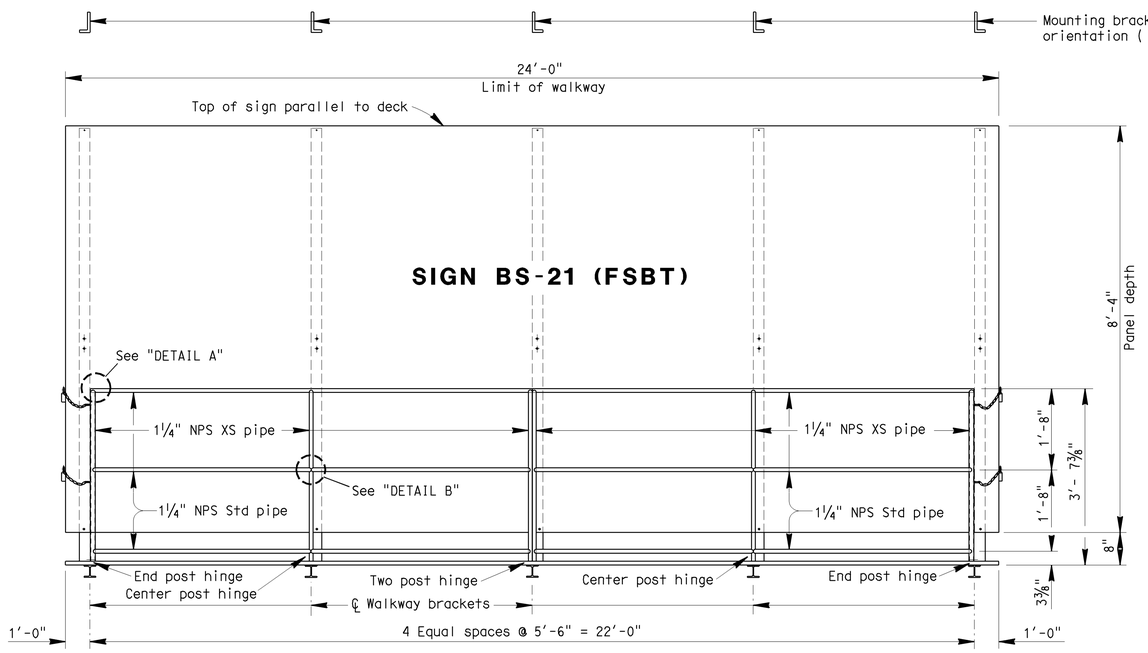

FRONT VIEW

No Scale

NOTES:

1. For details not shown, see "BRIDGE MOUNTED SIGN TYPICAL DETAILS NO.1", "BRIDGE MOUNTED SIGN TYPICAL DETAILS NO.2" and "BRIDGE MOUNTED SIGN TYPICAL DETAILS NO.3".
2. Special care shall be taken to insure that the complete hinge and latch assembly will hold the safety railing in a steady manner, free of wobble while in the raised position. Max allowable displacement from vertical at top of railing when latched shall be 1".
3. Safety chain shall be ¼" galvanized steel coil chain, approximately 12 links per foot. Length shall be min which allows lock-up of safety railing. Min of two safety chains at each end of safety railing. Material shall be Grade 43 high test chain ASTM A413.
4. Safety chain is located at the ends of the walkway only but is shown here for clarity.
5. All high strength (HS) bolts shall be snug tightened.

NOTE:
THE CONTRACTOR SHALL VERIFY ALL CONTROLLING FIELD DIMENSIONS BEFORE ORDERING OR FABRICATING ANY MATERIAL.

REVISED STANDARD PLAN SHEET NO.

DETAIL NO.

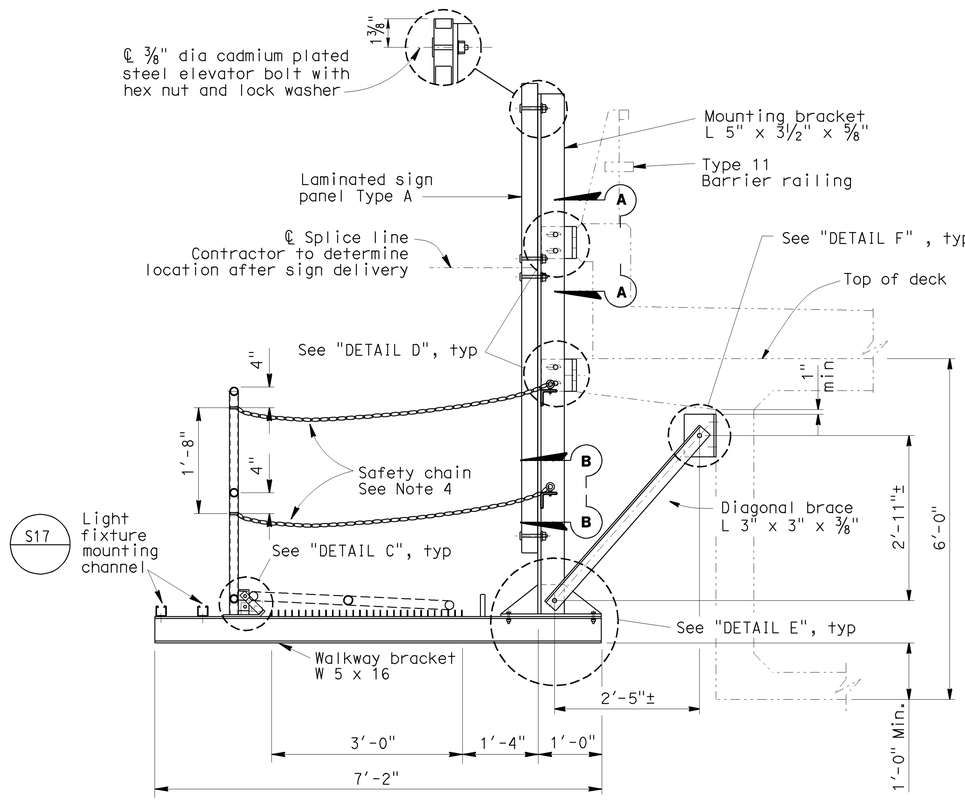

TYPICAL SECTION

No Scale

DESIGN	BY R HEZAR	CHECKED A GUTIERREZ	
DETAILS	BY D W JUSTICE Jr	CHECKED R HEZAR	
QUANTITIES	BY R HEZAR	CHECKED A GUTIERREZ	

BRANCH CHIEF Jeffrey B Woody

STATE OF CALIFORNIA
DEPARTMENT OF TRANSPORTATION

DIVISION OF ENGINEERING SERVICES
DESIGN AND TECHNICAL SERVICES
SPECIAL DESIGNS BRANCH

A

BRIDGE NO. 22-0030
POST MILE R23.8

COUNTY ROAD 8 OC
BRIDGE MOUNTED SIGN LAYOUT

SDS-6

(ENGLISH) SPECIAL DESIGNS BRANCH BORDER SHEET (REV. 7-1-09)

ORIGINAL SCALE IN INCHES FOR REDUCED PLANS 0 1 2 3

CU 03
EA 3C8901

DISREGARD PRINTS BEARING EARLIER REVISION DATES →

REVISION DATES: 3-12-10 | 3-30-10 | 4-29-10 | 5/11/10

SHEET OF

FILE => spec_des_br_prj/2010sd/03-1A9501/sds-6.dgn

USERNAME => ryee DATE PLOTTED => 11-MAY-2010 TIME PLOTTED => 10:08

DIST	COUNTY	ROUTE	POST MILES TOTAL PROJECT	SHEET No	TOTAL SHEETS
03	Yol, Col	5	R21.5/R23.8 R27.0/R28.9 R0/R21.0	84	87

Mahfoud A. Licha 5/11/10
REGISTERED CIVIL ENGINEER DATE

5-10-10
PLANS APPROVAL DATE

REGISTERED PROFESSIONAL ENGINEER MAHFOUD A. LICHA No. C62816 Exp. 6/30/10 CIVIL STATE OF CALIFORNIA

The State of California or its officers or agents shall not be responsible for the accuracy or completeness of electronic copies of this plan sheet.

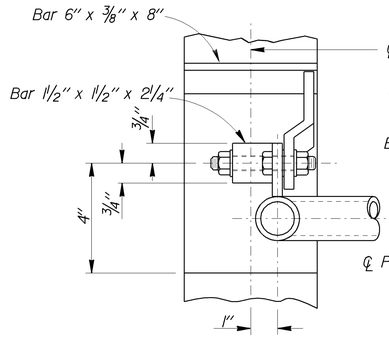

END POST HINGE
NO SCALE

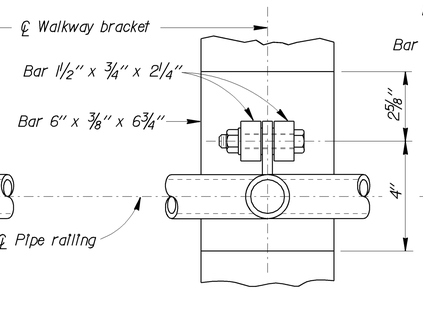

CENTER POST WELDED HINGE - PLAN
NO SCALE

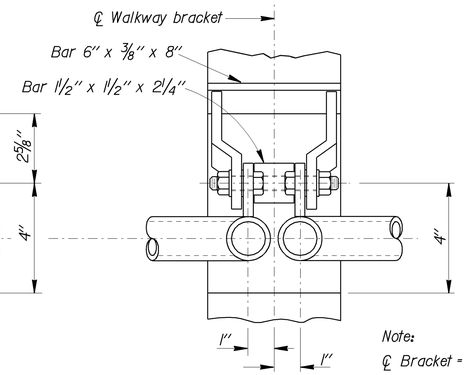

TWO POST HINGE
NO SCALE

Note:
℄ Bracket = ℄ Welded hinge

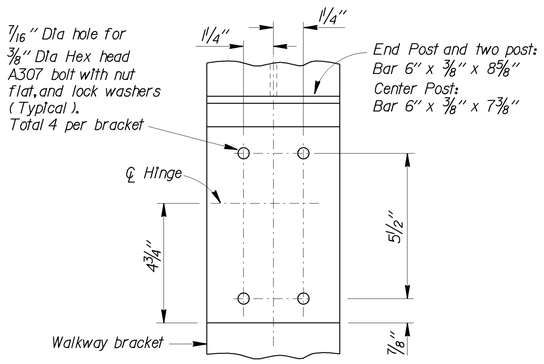

TYPICAL BOLTED (ALTERNATIVE) HINGED CONNECTION
NO SCALE

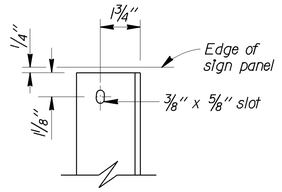

SECTION A-A
NO SCALE

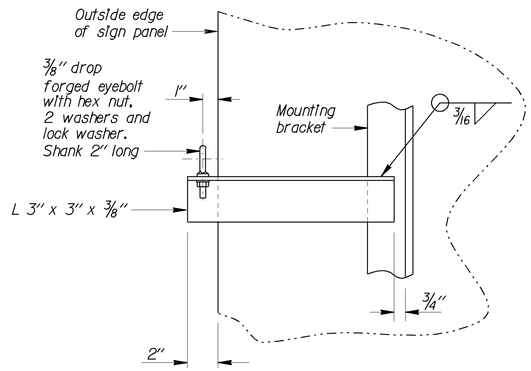

SECTION B-B
NO SCALE

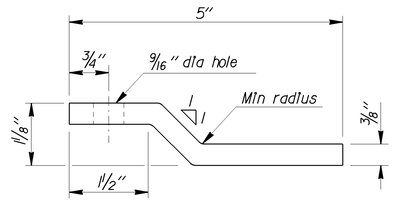

PLAN - KICKER BAR
NO SCALE

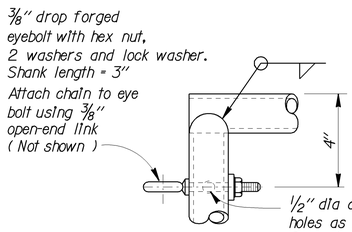

DETAIL A

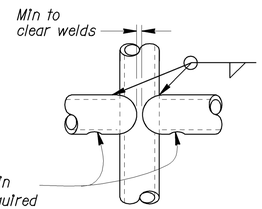

DETAIL B

Note: Alternative venting methods may be used if approved by the Engineer.
NO SCALE

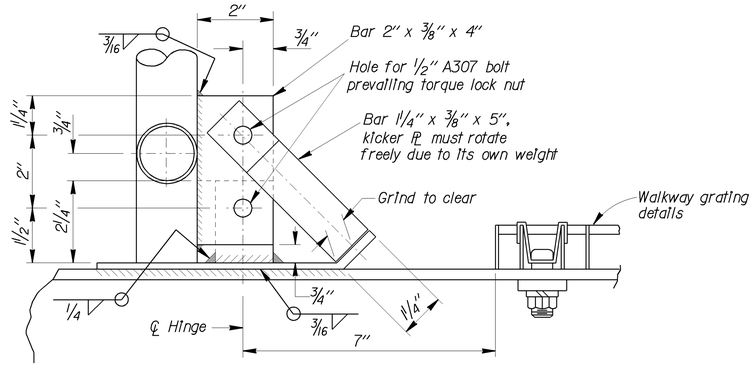

DETAIL C
NO SCALE

NOTE:
THE CONTRACTOR SHALL VERIFY ALL CONTROLLING FIELD DIMENSIONS BEFORE ORDERING OR FABRICATING ANY MATERIAL.

BRANCH CHIEF Jeffrey B Woody	DESIGN	BY MAHFOUD LICHA	CHECKED ARLENA GUTIERREZ	STATE OF CALIFORNIA DEPARTMENT OF TRANSPORTATION	DIVISION OF ENGINEERING SERVICES DESIGN AND TECHNICAL SERVICES SPECIAL DESIGNS BRANCH A	BRIDGE NO. Various	BRIDGE MOUNTED SIGN TYPICAL DETAILS NO. 1	SDS-7
	DETAILS	BY R. YEE	CHECKED MAHFOUD LICHA			POST MILE Various		
	QUANTITIES	BY	CHECKED					

(ENGLISH) SPECIAL DESIGNS BRANCH BORDER SHEET (REV. 7-1-09)

ORIGINAL SCALE IN INCHES FOR REDUCED PLANS 0 1 2 3

CU 03
EA 3C8901

DISREGARD PRINTS BEARING EARLIER REVISION DATES →

REVISION DATES: 3/26/10 | 4/26/10 | 5/3/10 | 5/11/10

SHEET OF

FILE => /2010sd/03-3C8901/sds7.dgn

USERNAME => ryee DATE PLOTTED => 11-MAY-2010 TIME PLOTTED => 09:54

DIST	COUNTY	ROUTE	POST MILES TOTAL PROJECT	SHEET No	TOTAL SHEETS
03	Yol,Col	5	R21.5/R23.8 R27.0/R28.9 R0/R21.0	85	87

Mahfoud A. Licha 5/11/10
REGISTERED CIVIL ENGINEER DATE

5-10-10
PLANS APPROVAL DATE

REGISTERED PROFESSIONAL ENGINEER MAHFOUD A. LICHA No. C62816 Exp. 6/30/10 CIVIL STATE OF CALIFORNIA

The State of California or its officers or agents shall not be responsible for the accuracy or completeness of electronic copies of this plan sheet.

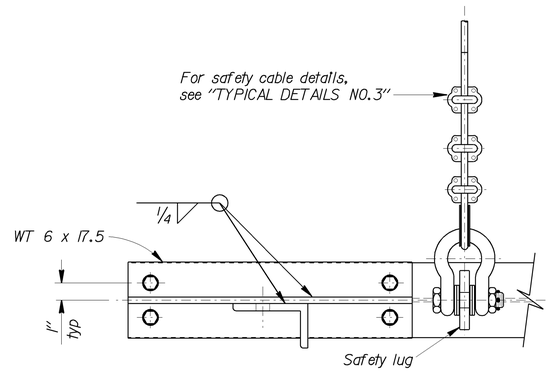

SECTION C-C
NO SCALE

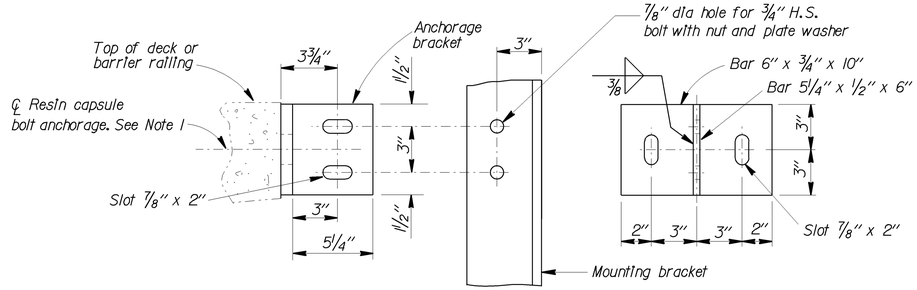

DETAIL D
NO SCALE

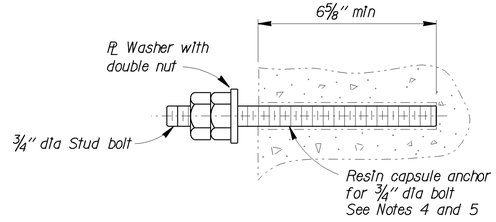

RESIN CAPSULE BOLT ANCHORAGE
NO SCALE

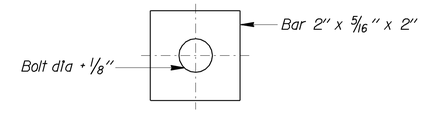

PLATE WASHER
NO SCALE
For all slotted holes

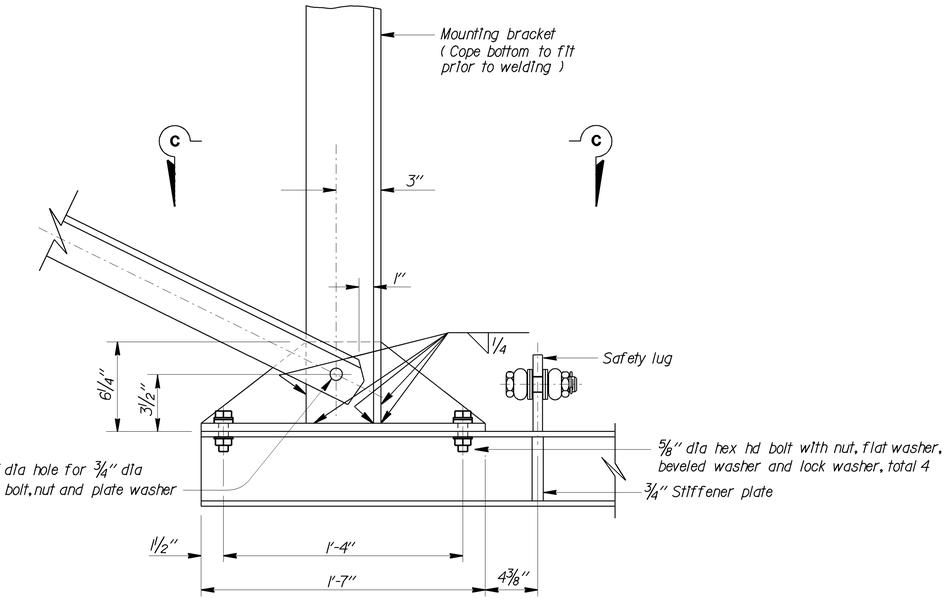

DETAIL E
NO SCALE
Note: Mirror image for Route 20/5 sign

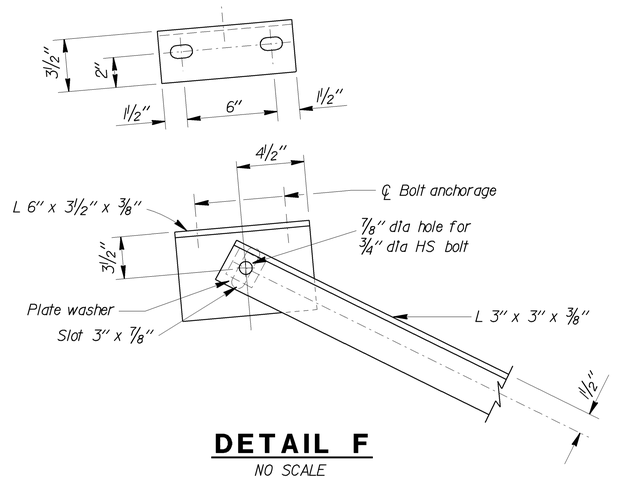

DETAIL F
NO SCALE

NOTES:

1. Resin capsule bolts shall not interfere with existing railing anchorages.
2. Resin capsule anchorage is subject to approval of the Engineer. Installation procedure shall comply with manufacturer's instructions.
3. Unless otherwise shown all steel shall be galvanized after fabrication.
4. Existing bridge mounted sign anchors shall be cut flush with edge of deck by mechanical means. Damage to concrete surface resulting from cut shall be repaired at the Contractor's expense to the Engineer's satisfaction. Cut ends of anchors shall be coated with 2 coats of zinc rich primer.
5. Where new resin capsule bolt anchorage coincides with Type 7 fence post or existing bridge mounted sign anchorage, adjust new mounting bracket to create a minimum distance of 6" measured from the centerline of nearest resin capsule bolt anchorage to the centerline of fence post or centerline of existing bridge mounted sign anchorage, or as approved by the Engineer.
6. Resin capsule bolt anchors shall be installed in sound concrete free of cracks or delamination.

NOTE:
THE CONTRACTOR SHALL VERIFY ALL CONTROLLING FIELD DIMENSIONS BEFORE ORDERING OR FABRICATING ANY MATERIAL.

BRANCH CHIEF Jeffrey B Woody	DESIGN	BY MAHFOUD LICHA	CHECKED ARLENA GUTIERREZ	STATE OF CALIFORNIA DEPARTMENT OF TRANSPORTATION	DIVISION OF ENGINEERING SERVICES DESIGN AND TECHNICAL SERVICES SPECIAL DESIGNS BRANCH A	BRIDGE NO. Various	BRIDGE MOUNTED SIGN
	DETAILS	BY R. YEE	CHECKED MAHFOUD LICHA			POST MILE Various	TYPICAL DETAILS NO. 2
	QUANTITIES	BY	CHECKED				SDS-8

(ENGLISH) SPECIAL DESIGNS BRANCH BORDER SHEET (REV. 7-1-09)

ORIGINAL SCALE IN INCHES FOR REDUCED PLANS 0 1 2 3

CU 03
EA 3C8901

DISREGARD PRINTS BEARING EARLIER REVISION DATES

REVISION DATES 3/24/10 4/10/10 5/11/10

SHEET OF

FILE => /2010sd/03-3C8901/sds8.dgn

USERNAME => ryee DATE PLOTTED => 11-MAY-2010 TIME PLOTTED => 09:56

DIST	COUNTY	ROUTE	POST MILES TOTAL PROJECT	SHEET No	TOTAL SHEETS
03	Yol, Col	5	R21.5/R23.8 R27.0/R28.9 R0/R21.0	86	87

Mahfoud A Licha 5/11/10
REGISTERED CIVIL ENGINEER DATE

5-10-10
PLANS APPROVAL DATE

MAHFOUD A. LICHA No. C62816 Exp. 6/30/10 CIVIL — REGISTERED PROFESSIONAL ENGINEER — STATE OF CALIFORNIA

The State of California or its officers or agents shall not be responsible for the accuracy or completeness of electronic copies of this plan sheet.

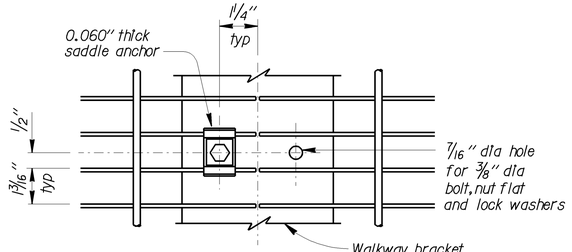

PLAN

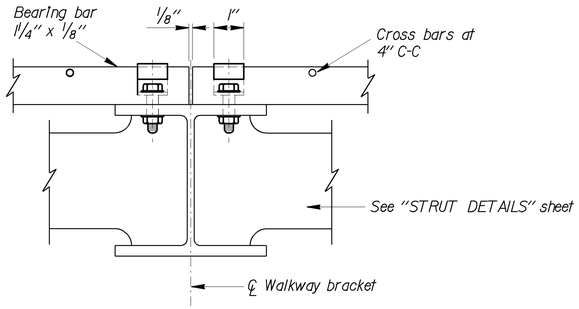

WALKWAY GRATING DETAILS

(Shown at splice)
NO SCALE

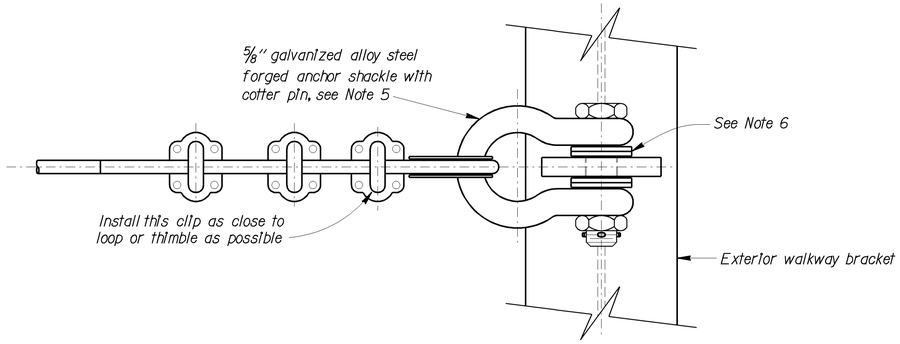

PLAN

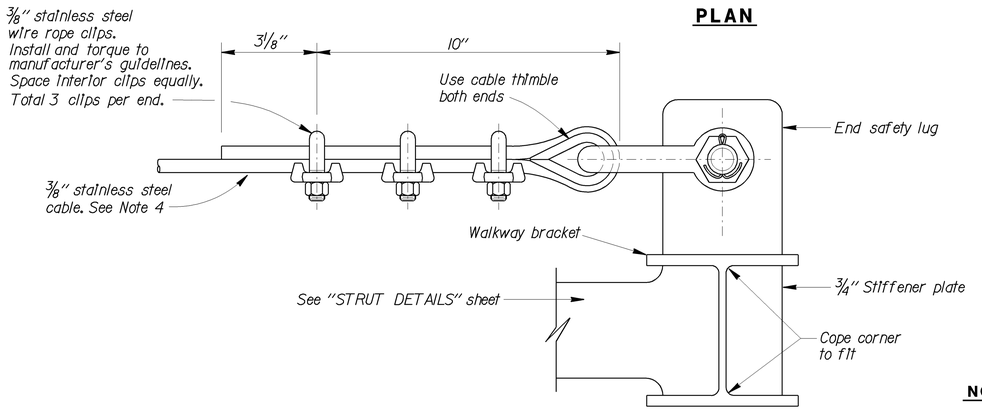

ELEVATION

END VIEW SAFETY CABLE

NO SCALE

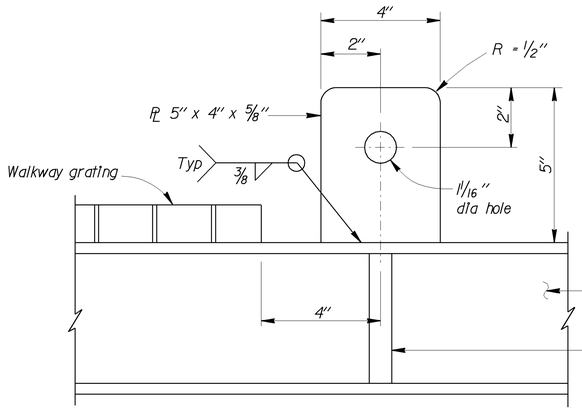

INTERIOR SAFETY LUG DETAIL

NO SCALE

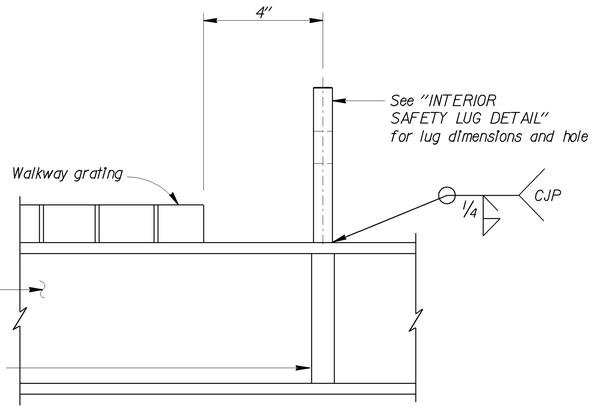

END SAFETY LUG DETAIL

NO SCALE

NOTES:

1. Welded type grating shall have 1¼" x ⅛" bearing bars at 1 3/16" centers with ¼" diameter (or equal) cross bars at 4" centers. If mechanical lock grating is used, it shall be equal in strength to the welded type. Alternative hold-down clips may be submitted for approval.
2. Walkway grating and light fixture mounting channels to be continuous (no splices) over as many walkway brackets as practical and consistent with fabrication, ease of handling and assembly.
3. Contractor may substitute 1⅝" x 1⅝" x .1084" cont-slot steel channel with pre-punched slots not larger than 13/32" x 3". Slots shall be at bottom of channel and shall be parallel to channel. Slots shall be spaced not closer than 4" center to center.
4. Stainless steel cable shall be 7 x 19 class strand core construction using Type 302 or 304 alloy stainless steel strands. Minimum cable breaking strength shall be 10,000 pounds. Cable shall be free of kinks, knots, or deformation and shall be continuous between end lugs. Splices not allowed. Safety cable shall not be prestretched.
5. Shackle shall be galvanized steel with working load limit of 10,000 pounds.
6. Place on equal amount of washers on each side to align cable with end lug without restricting shackle bolt rotation or contacting cable.
7. Prior to tightening cable clips at exterior anchorage, slack in cable shall be removed by the full effort of a typical construction worker.

NOTE:
THE CONTRACTOR SHALL VERIFY ALL CONTROLLING FIELD DIMENSIONS BEFORE ORDERING OR FABRICATING ANY MATERIAL.

BRANCH CHIEF Jeffrey B Brady

	BY	CHECKED
DESIGN	MAHFOUD LICHA	ARLENA GUTIERREZ
DETAILS	R. YEE	MAHFOUD LICHA
QUANTITIES		

STATE OF **CALIFORNIA** DEPARTMENT OF TRANSPORTATION

DIVISION OF ENGINEERING SERVICES DESIGN AND TECHNICAL SERVICES
SPECIAL DESIGNS BRANCH **A**

BRIDGE NO. Various
POST MILE Various

BRIDGE MOUNTED SIGN
TYPICAL DETAILS NO. 3

SDS-9

(ENGLISH) SPECIAL DESIGNS BRANCH BORDER SHEET (REV. 7-1-09)

ORIGINAL SCALE IN INCHES FOR REDUCED PLANS 0 1 2 3

CU 03
EA 3C8901

DISREGARD PRINTS BEARING EARLIER REVISION DATES →

REVISION DATES									SHEET	OF
3/26/10	4/29/10	5/11/10								

FILE => /2010sd/03-3C8901/sds9.dgn

DATE PLOTTED => 11-MAY-2010 TIME PLOTTED => 09:59
USERNAME => ryee

DIST	COUNTY	ROUTE	POST MILES TOTAL PROJECT	SHEET No	TOTAL SHEETS
03	Yol,Col	5	R21.5/R23.8 R27.0/R28.9 R0/R21.0	87	87

Mahfoud A Licha 5/11/10
REGISTERED CIVIL ENGINEER DATE

5-10-10
PLANS APPROVAL DATE

REGISTERED PROFESSIONAL ENGINEER MAHFOUD A. LICHA No. C62816 Exp. 6/30/10 CIVIL STATE OF CALIFORNIA

The State of California or its officers or agents shall not be responsible for the accuracy or completeness of electronic copies of this plan sheet.

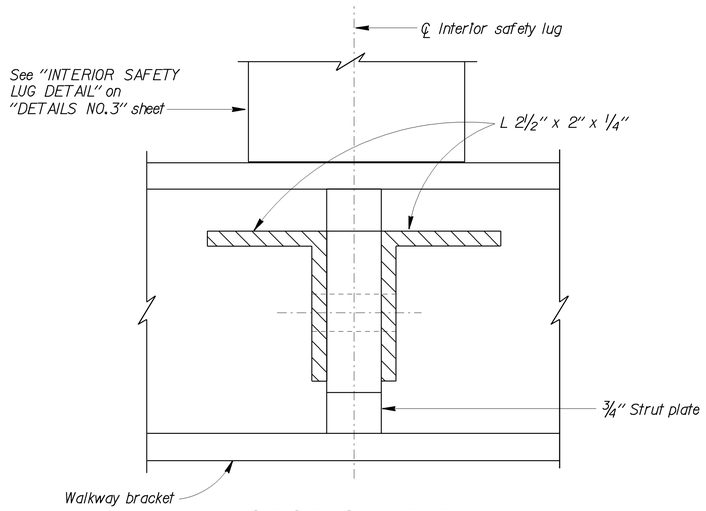

SECTION E-E
NO SCALE

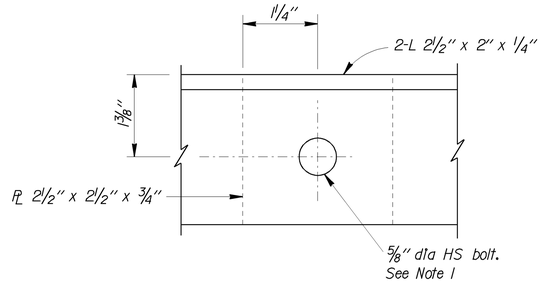

FILLER PLATE (TYP)
NO SCALE

NOTE:

1. Drill ¾" dia hole for ⅝" dia HS bolt, 2 hardened washers and nut.

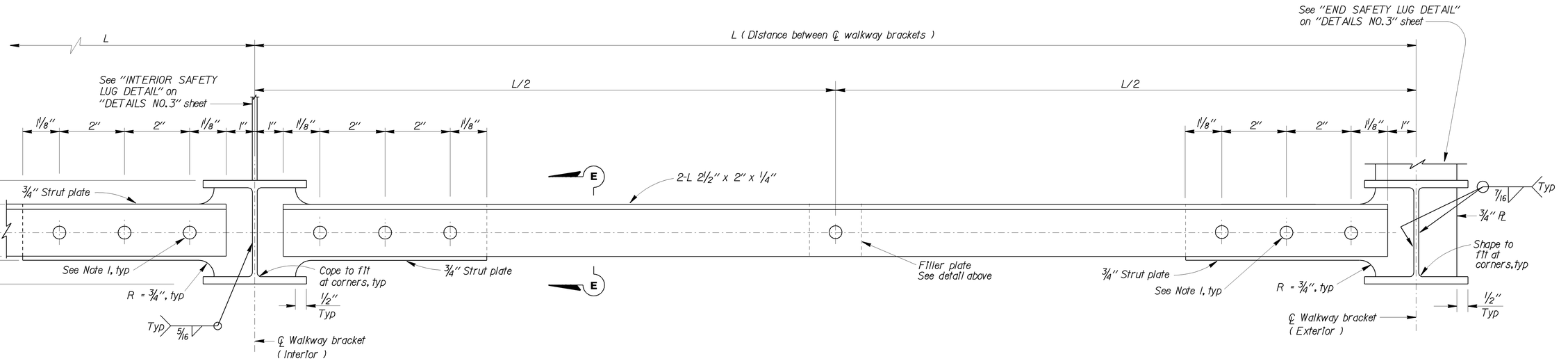

INTERIOR SAFETY LUG LOCATION (TYP)
NO SCALE

STRUT SYSTEM (TYP)
(Continuous between end safety lug locations)
NO SCALE

END SAFETY LUG LOCATION (TYP)
NO SCALE

NOTE:
THE CONTRACTOR SHALL VERIFY ALL CONTROLLING FIELD DIMENSIONS BEFORE ORDERING OR FABRICATING ANY MATERIAL.

BRANCH CHIEF Jeffrey S Woody

DESIGN	BY MAHFOUD LICHA	CHECKED ARLENA GUTIERREZ
DETAILS	BY R. YEE	CHECKED MAHFOUD LICHA
QUANTITIES	BY	CHECKED

STATE OF CALIFORNIA
DEPARTMENT OF TRANSPORTATION

DIVISION OF ENGINEERING SERVICES
DESIGN AND TECHNICAL SERVICES
SPECIAL DESIGNS BRANCH A

BRIDGE NO. Various
POST MILE Various

BRIDGE MOUNTED SIGN
STRUT DETAILS

SDS-10

(ENGLISH) SPECIAL DESIGNS BRANCH BORDER SHEET (REV. 7-1-09)

ORIGINAL SCALE IN INCHES FOR REDUCED PLANS 0 1 2 3

CU 03
EA 3C8901

FILE => /2010sd/03-3C8901/sds10.dgn

DISREGARD PRINTS BEARING EARLIER REVISION DATES →

REVISION DATES										SHEET	OF
4/15/10	4/29/10	5/11/10									

DATE PLOTTED => 11-MAY-2010 TIME PLOTTED => 09:44
USERNAME => ryee