Dist	COUNTY	ROUTE	POST MILES TOTAL PROJECT	SHEET No.	TOTAL SHEETS
03	Sac	12	0.3/6.1	1	57

STATE OF CALIFORNIA

DEPARTMENT OF TRANSPORTATION

ACHSNH-P012(110)

PROJECT PLANS FOR CONSTRUCTION ON

STATE HIGHWAY

IN SACRAMENTO COUNTY
NEAR RIO VISTA AT VARIOUS LOCATIONS
FROM EAST OF THE SACRAMENTO RIVER BRIDGE
TO THE MOKELUMNE RIVER BRIDGE

TO BE SUPPLEMENTED BY STANDARD PLANS DATED MAY 2006

INDEX OF PLANS

SHEET No.	DESCRIPTION
1	TITLE AND LOCATION MAP
2-3	TYPICAL CROSS SECTION
4-13	CONSTRUCTION AREA SIGNS
15-24	SUMMARY OF QUANTITIES
25-27	ELECTRICAL PLANS
28-57	REVISED AND NEW STANDARD PLAN

THE STANDARD PLANS LIST APPLICABLE TO THIS CONTRACT IS INCLUDED IN THE NOTICE TO BIDDERS AND SPECIAL PROVISIONS BOOK.

LOCATION MAP

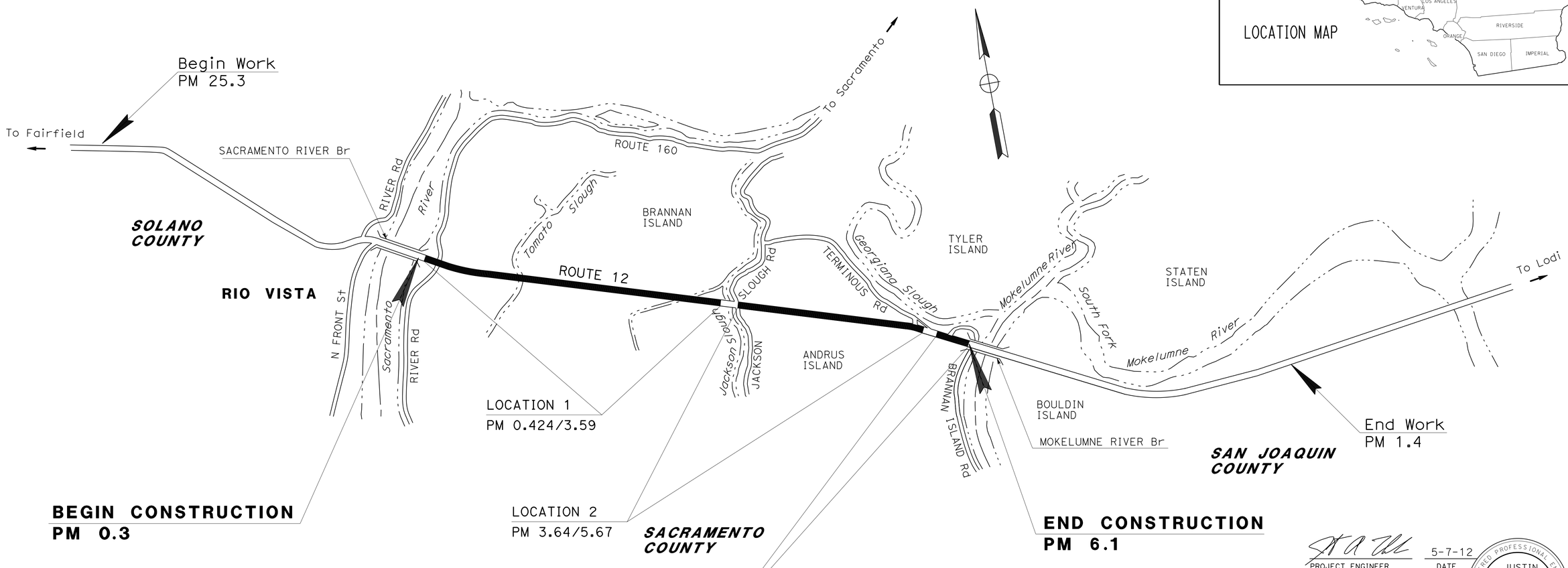

NO SCALE

THE CONTRACTOR SHALL POSSESS THE CLASS (OR CLASSES) OF LICENSE AS SPECIFIED IN THE "NOTICE TO BIDDERS."

PROJECT MANAGER: JESS AVILA

DESIGN ENGINEER: MOHAMMAD U. SADIQ

PROJECT ENGINEER REGISTERED CIVIL ENGINEER — DATE 5-7-12

REGISTERED PROFESSIONAL ENGINEER — JUSTIN A. UNCK — No. 65889 — Exp. 12-31-13 — CIVIL — STATE OF CALIFORNIA

May 14, 2012
PLANS APPROVAL DATE

THE STATE OF CALIFORNIA OR ITS OFFICERS OR AGENTS SHALL NOT BE RESPONSIBLE FOR THE ACCURACY OR COMPLETENESS OF SCANNED COPIES OF THIS PLAN SHEET.

CONTRACT No.	03-3C9004
PROJECT ID	0300020596

LAST REVISION 00-00-00 — DATE PLOTTED => 21-MAY-2012 TIME PLOTTED => 07:17

Dist	COUNTY	ROUTE	POST MILES TOTAL PROJECT	SHEET No.	TOTAL SHEETS
03	Sac	12	0.3/6.1	2	57

REGISTERED CIVIL ENGINEER 5-7-12 DATE

5-14-12
PLANS APPROVAL DATE

REGISTERED PROFESSIONAL ENGINEER JUSTIN A. UNCK No. 65889 Exp. 12-31-13 CIVIL STATE OF CALIFORNIA

THE STATE OF CALIFORNIA OR ITS OFFICERS OR AGENTS SHALL NOT BE RESPONSIBLE FOR THE ACCURACY OR COMPLETENESS OF SCANNED COPIES OF THIS PLAN SHEET.

NOTES:

1. DIMENSIONS OF THE PAVEMENT STRUCTURES (STRUCTURAL SECTIONS) ARE SUBJECT TO TOLERANCES SPECIFIED IN THE STANDARD SPECIFICATIONS.
2. SUPERELEVATION AS SHOWN OR DIRECTED BY THE ENGINEER.
3. EXISTING UTILITY FACILITIES ARE NOT SHOWN ON THESE PLANS. SEE SPECIAL PROVISIONS.
4. SEE CONSTRUCTION DETAILS FOR PAVING CONFORMS AT PUBLIC ROADS, PRIVATE ROADS AND DRIVEWAYS.
5. SEE SUMMARY OF QUANTITIES FOR EXACT LOCATIONS OF MBGR AND HMA DIKE.
6. SEE SUMMARY OF QUANTITIES FOR LOCATION, WIDTH, THICKNESS AND REPLACEMENT MATERIAL FOR FULL DEPTH DIGOUTS AND REPLACE AC SURFACING. EXACT LOCATIONS TO BE DETERMINED BY THE ENGINEER.
7. AT LOCATIONS WHERE PREVIOUS HMA OVERLAYS DID NOT EXTEND TO THE EP, OVERLAY THE SHOULDER TO MAINTAIN EXISTING SHOULDER SLOPE. EXISTING HMA (A) THICKNESS ESTIMATED AT 0.1′ TO 0.2′.
8. PAVEMENT REINFORCING FABRIC EXISTS AT VARIOUS LOCATIONS IN THE PROJECT. THE FURTHEST LATERAL EXTENT OF THE FABRIC IS 2′ OUTSIDE THE ETW.
9. FOR REPLACE AC SURFACING, PERFORM CRACK TREATMENT AFTER GRINDING AND BEFORE REPAVING.
10. CONSTRUCT PROFILE CORRECTIONS BEFORE PLACING 0.2′ RHMA (G). SEE CONSTRUCTION DETAILS.
11. FOR ACCURATE RIGHT OF WAY DATA, CONTACT RIGHT OF WAY ENGINEERING AT THE DISTRICT OFFICE.
12. PLACE SAFETY EDGE ACCORDING TO STANDARD PLANS NSP74 AND NSP75.
13. SEE SUMMARY OF QUANTITIES FOR LOCATIONS FOR COLD PLANE AC PAVEMENT AND RUMBLE STRIPS.

STRUCTURAL SECTIONS (SEE NOTE 10):

1	0.2′ RHMA (G) - SEE NOTE 10 VARIABLE THICKNESS HMA (A)
2	0.1′-0.2′ HMA (A) - SEE NOTE 7
3	REPLACE AC SURFACING (DEPTH = 0.25′) - SEE NOTE 6.
4	FULL DEPTH DIGOUT - SEE NOTE 6.
A	Exist - SEE NOTE 6 AND 8 0.55′ - 0.84′ AC 0 - 2.30′ AB

ABBREVIATIONS

RHMA (G) - RUBBERIZED HMA (GAP GRADED)
HMA (A) - HOT MIX ASPHALT (TYPE A)

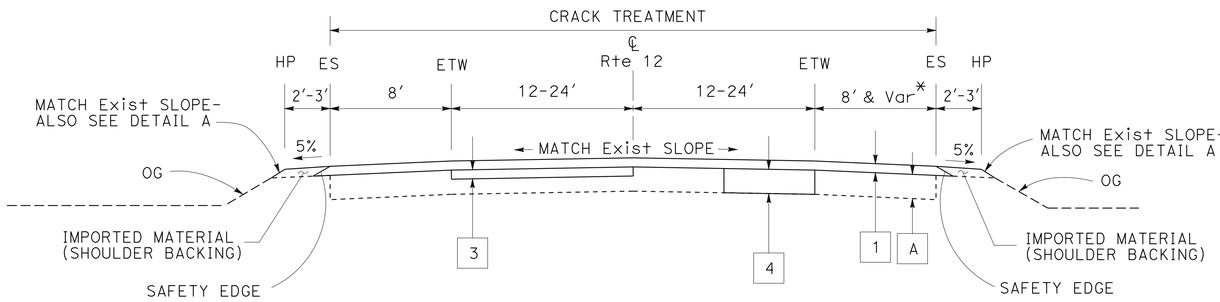

PM 0.424 TO 2.56
PM 3.36 TO 3.59
PM 3.64 TO 3.73
PM 4.80 TO 5.67
PM 5.77 TO 6.06

* FOR CALL BOX PAVING, SEE CONSTRUCTION DETAILS.

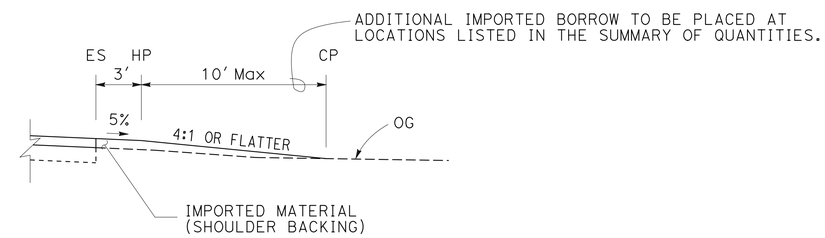

DETAIL A

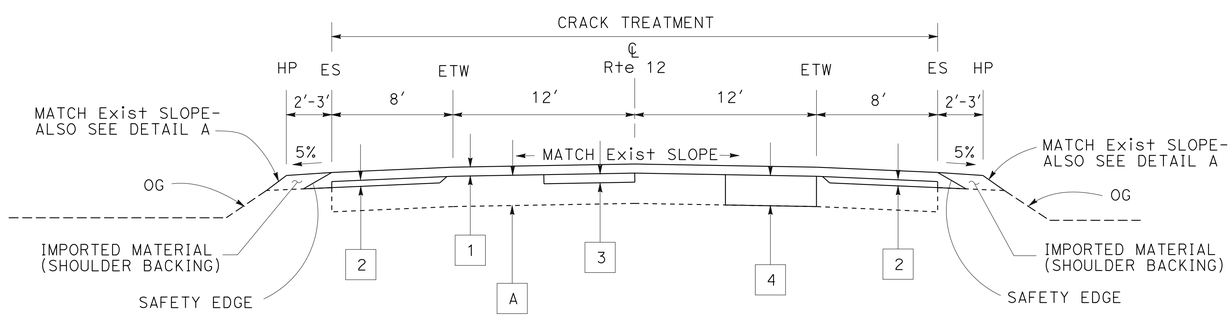

PM 2.56 TO 3.36
PM 3.73 TO 4.80

ROUTE 12

TYPICAL CROSS SECTIONS

NO SCALE

X-1

STATE OF CALIFORNIA - DEPARTMENT OF TRANSPORTATION
Caltrans® DIVISION OF ENGINEERING

FUNCTIONAL SUPERVISOR: MOHAMMAD U. SADIQ
CALCULATED-DESIGNED BY: JUSTIN UNCK
CHECKED BY: JERRY CAGLE
REVISED BY
DATE REVISED

LAST REVISION 00-00-00
DATE PLOTTED => 14-MAY-2012
TIME PLOTTED => 11:21

Dist	COUNTY	ROUTE	POST MILES TOTAL PROJECT	SHEET No.	TOTAL SHEETS
03	Sac	12	0.3/6.1	3	57

REGISTERED CIVIL ENGINEER 5-7-12 DATE

5-14-12
PLANS APPROVAL DATE

REGISTERED PROFESSIONAL ENGINEER JUSTIN A. UNCK No. 65889 Exp. 12-31-13 CIVIL STATE OF CALIFORNIA

THE STATE OF CALIFORNIA OR ITS OFFICERS OR AGENTS SHALL NOT BE RESPONSIBLE FOR THE ACCURACY OR COMPLETENESS OF SCANNED COPIES OF THIS PLAN SHEET.

* THE APPROXIMATE WIDTHS GIVEN ARE BETWEEN THE CENTER OF THE CORNER AND THE END OF THE CONFORM TAPER. SEE DETAIL B.

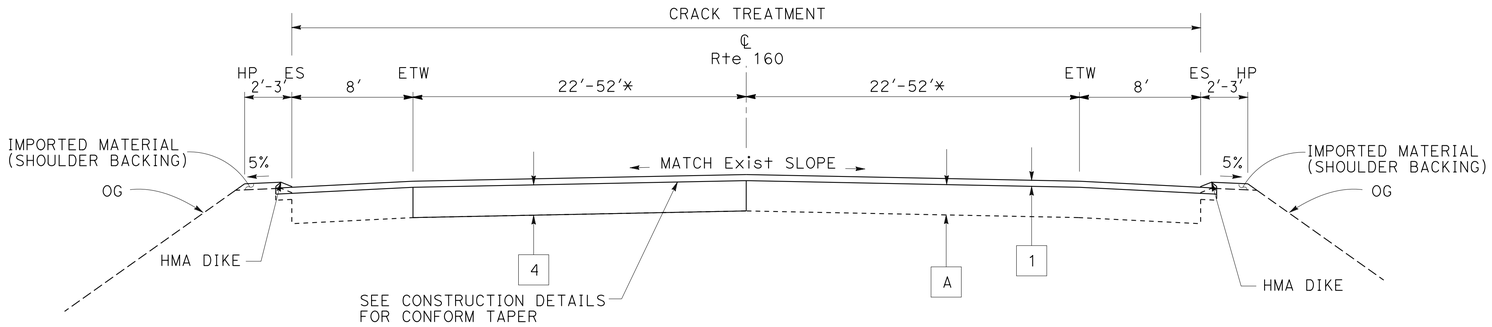

ROUTE 160 (RIVER ROAD)
(NORTH & SOUTH LEG)
AT INTERSECTION WITH Rte 12

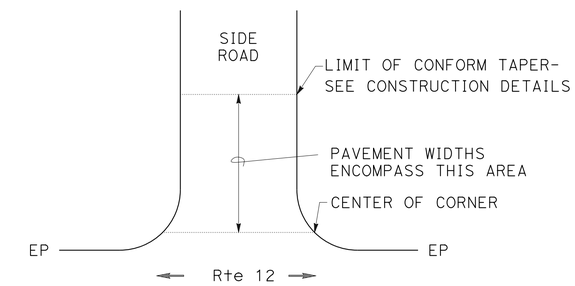

DETAIL B

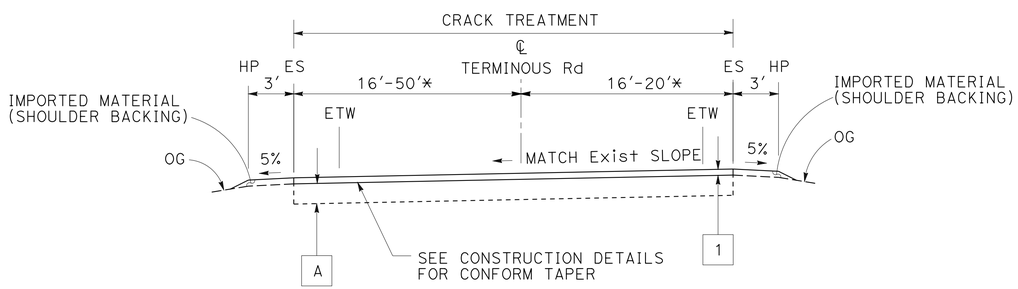

TERMINOUS Rd
(TWO WAY LEG)
AT INTERSECTION WITH Rte 12

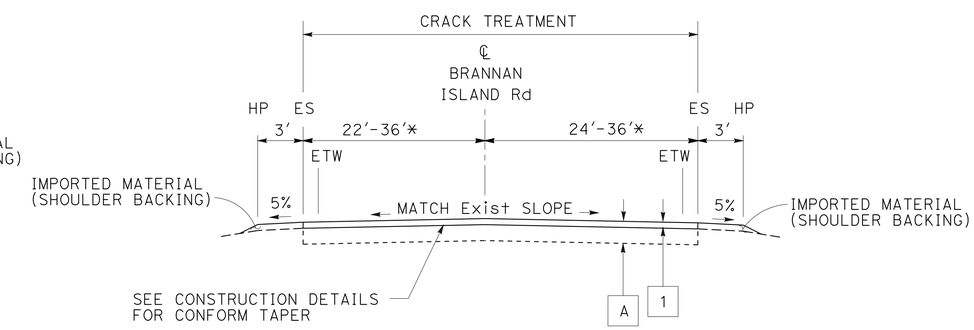

BRANNAN ISLAND Rd
AT INTERSECTION WITH Rte 12

TYPICAL CROSS SECTIONS
NO SCALE

X-2

STATE OF CALIFORNIA - DEPARTMENT OF TRANSPORTATION
Caltrans® DIVISION OF ENGINEERING

FUNCTIONAL SUPERVISOR: MOHAMMAD U. SADIQ
CALCULATED-DESIGNED BY: JUSTIN UNCK
CHECKED BY: JERRY CAGLE
REVISED BY
DATE REVISED

LAST REVISION 00-00-00 | DATE PLOTTED => 14-MAY-2012 | TIME PLOTTED => 11:21

Dist	COUNTY	ROUTE	POST MILES TOTAL PROJECT	SHEET No.	TOTAL SHEETS
03	Sac	12	0.3/6.1	4	57

REGISTERED CIVIL ENGINEER 5-7-12 DATE

5-14-12
PLANS APPROVAL DATE

REGISTERED PROFESSIONAL ENGINEER JUSTIN A. UNCK No. 65889 Exp. 12-31-13 CIVIL STATE OF CALIFORNIA

THE STATE OF CALIFORNIA OR ITS OFFICERS OR AGENTS SHALL NOT BE RESPONSIBLE FOR THE ACCURACY OR COMPLETENESS OF SCANNED COPIES OF THIS PLAN SHEET.

NOTES:
1. EXISTING UTILITY FACILITIES ARE NOT SHOWN ON THESE PLANS. SEE SPECIAL PROVISIONS.
2. SEE ADDITIONAL DETAILS THIS PLAN SET FOR RUMBLE STRIP LAYOUTS FOR DRIVEWAYS/PRIVATE ROADS, AND INTERSECTIONS.
3. SEE STANDARD PLAN SHEET A40A FOR RUMBLE STRIP DETAILS NOT SHOWN HERE.
4. CENTERLINE RUMBLE STRIP SHALL BE CONSTRUCTED PRIOR TO INSTALLING THERMOPLASTIC TRAFFIC STRIPING.
5. RUMBLE STRIPS SHALL NOT BE PLACED ON BRIDGE STRUCTURES OR APPROACH SLABS.

LEGEND

DIRECTION OF TRAVEL

TYPE D TWO-WAY YELLOW PAVEMENT MARKER (RETROREFLECTIVE)

TYPE H ONE-WAY YELLOW PAVEMENT MARKER (RETROREFLECTIVE)

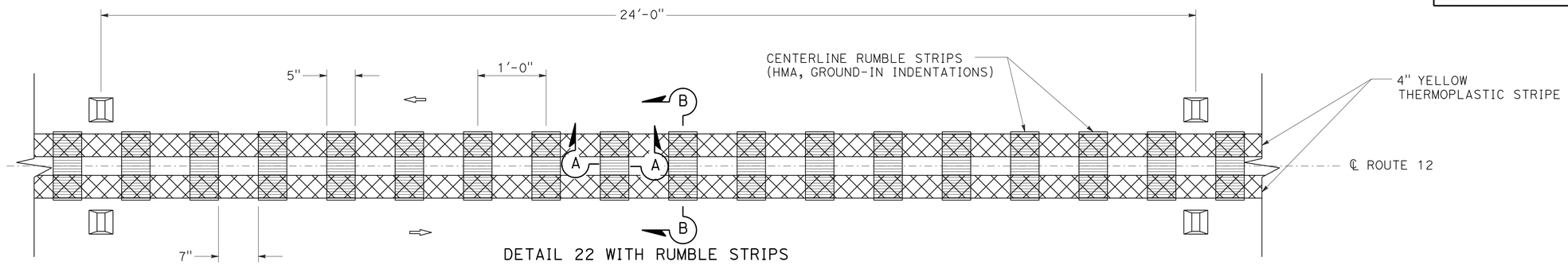

DETAIL 22 WITH RUMBLE STRIPS
(TYPICAL)

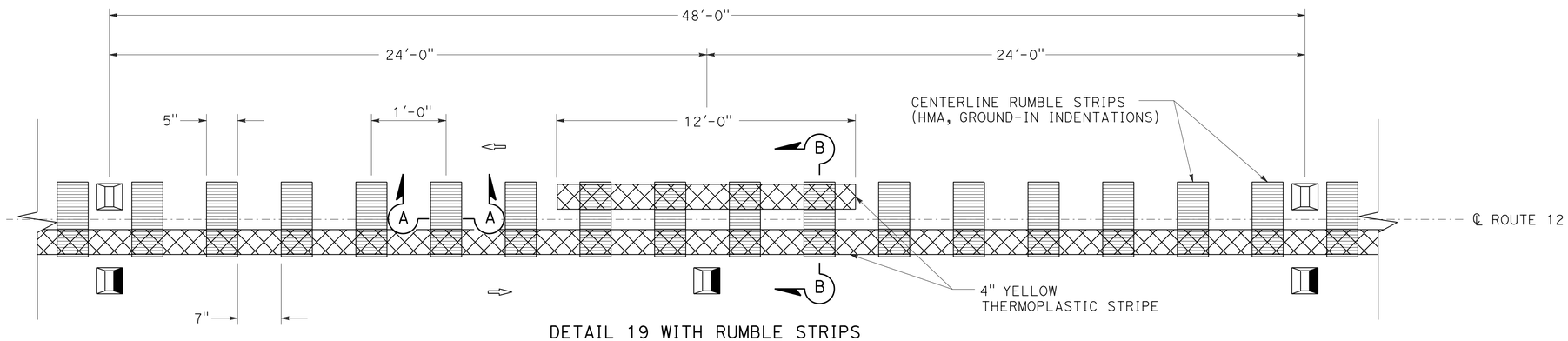

DETAIL 19 WITH RUMBLE STRIPS
(TYPICAL)

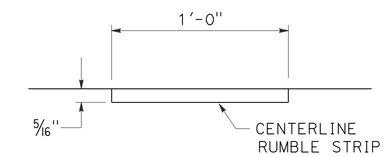

SECTION B-B

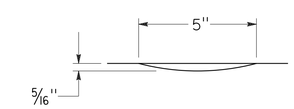

SECTION A-A

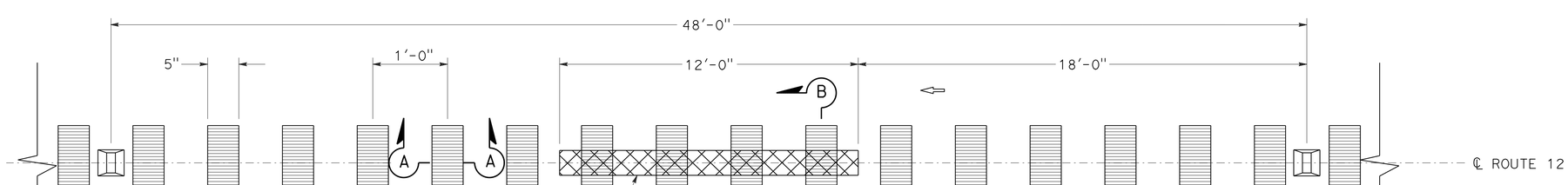

DETAIL 6 WITH RUMBLE STRIPS
(TYPICAL)

CONSTRUCTION DETAILS

NO SCALE

C-1

REVISED BY | DATE REVISED
MIKE HAGEN | JUSTIN UNCK
CALCULATED-DESIGNED BY | CHECKED BY
FUNCTIONAL SUPERVISOR
MOHAMMAD U. SADIQ

STATE OF CALIFORNIA - DEPARTMENT OF TRANSPORTATION
Caltrans® DIVISION OF ENGINEERING

LAST REVISION 00-00-00 | DATE PLOTTED => 14-MAY-2012 | TIME PLOTTED => 11:21

Dist	COUNTY	ROUTE	POST MILES TOTAL PROJECT	SHEET No.	TOTAL SHEETS
03	Sac	12	0.3/6.1	5	57

REGISTERED CIVIL ENGINEER 5-7-12 DATE

5-14-12
PLANS APPROVAL DATE

REGISTERED PROFESSIONAL ENGINEER JUSTIN A. UNCK No. 65889 Exp. 12-31-13 CIVIL STATE OF CALIFORNIA

THE STATE OF CALIFORNIA OR ITS OFFICERS OR AGENTS SHALL NOT BE RESPONSIBLE FOR THE ACCURACY OR COMPLETENESS OF SCANNED COPIES OF THIS PLAN SHEET.

NOTES:
1. EXISTING UTILITY FACILITIES ARE NOT SHOWN ON THESE PLANS. SEE SPECIAL PROVISIONS.
2. SEE SUMMARY OF QUANTITIES FOR LOCATIONS OF BREAKS IN RUMBLE STRIPS.
3. RUMBLE STRIPS SHALL NOT BE PLACED ON BRIDGE STRUCTURES OR APPROACH SLABS.
4. SEE ADDITIONAL DETAILS IN THIS PLAN SET FOR CENTERLINE RUMBLE STRIP PLACEMENT.

LEGEND:

⇨ DIRECTION OF TRAVEL

RUMBLE STRIP (HMA, GROUND-IN INDENTATIONS)

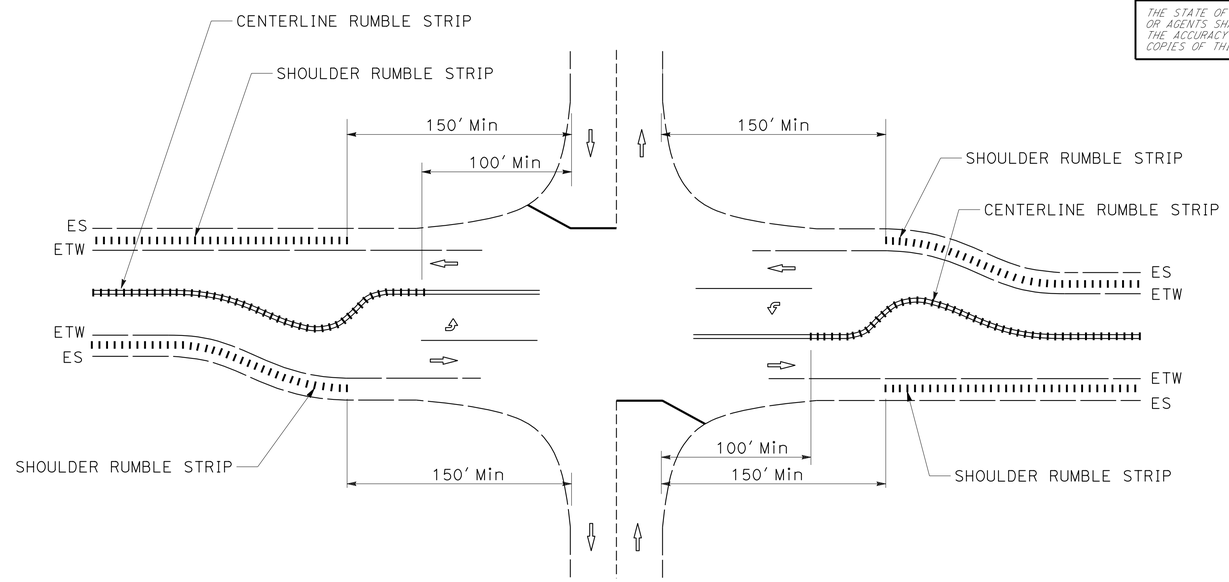

RUMBLE STRIPS AT INTERSECTIONS
WITH LEFT TURN POCKETS
SEE NOTE 2

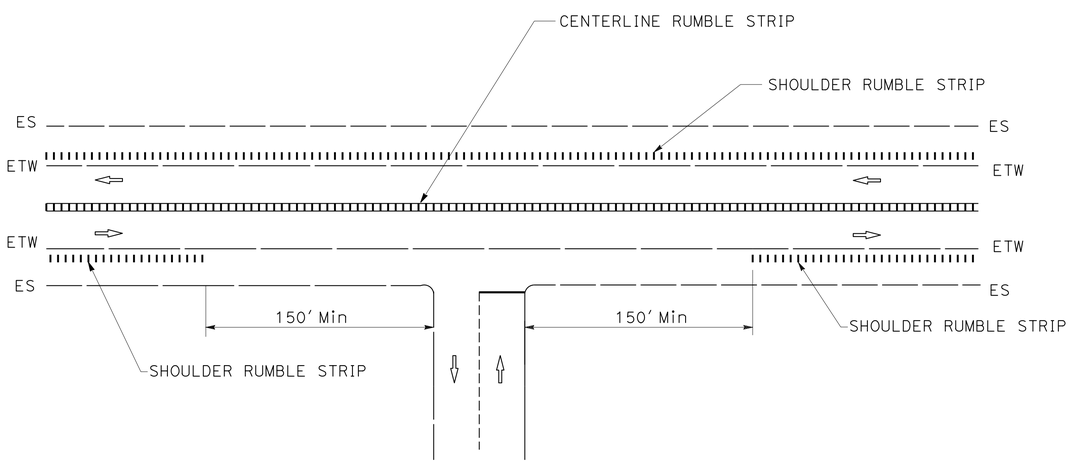

RUMBLE STRIPS AT DRIVEWAYS/
PRIVATE ROAD APPROACHES
SEE NOTE 2

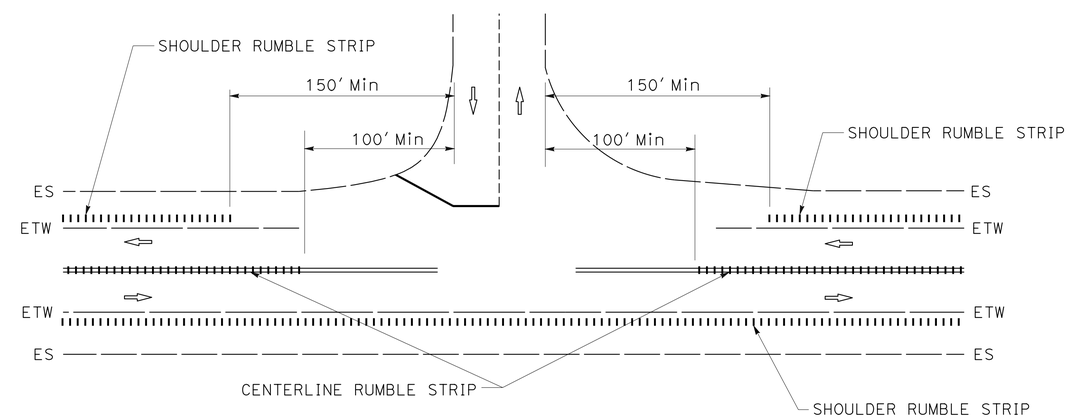

RUMBLE STRIPS AT INTERSECTIONS
WITHOUT LEFT TURN POCKETS
SEE NOTE 2

CONSTRUCTION DETAILS

NO SCALE

C-2

STATE OF CALIFORNIA - DEPARTMENT OF TRANSPORTATION
Caltrans DIVISION OF ENGINEERING

FUNCTIONAL SUPERVISOR: MOHAMMAD U. SADIQ
CALCULATED-DESIGNED BY: MIKE HAGEN
CHECKED BY: JUSTIN UNCK
REVISED BY / DATE REVISED

LAST REVISION 00-00-00 | DATE PLOTTED => 14-MAY-2012 | TIME PLOTTED => 11:21

Dist	COUNTY	ROUTE	POST MILES TOTAL PROJECT	SHEET No.	TOTAL SHEETS
03	Sac	12	0.3/6.1	6	57

REGISTERED CIVIL ENGINEER 5-7-12 DATE

5-14-12
PLANS APPROVAL DATE

REGISTERED PROFESSIONAL ENGINEER JUSTIN A. UNCK No. 65889 Exp. 12-31-13 CIVIL STATE OF CALIFORNIA

THE STATE OF CALIFORNIA OR ITS OFFICERS OR AGENTS SHALL NOT BE RESPONSIBLE FOR THE ACCURACY OR COMPLETENESS OF SCANNED COPIES OF THIS PLAN SHEET.

NOTES: 1. EXISTING UTILITY FACILITIES ARE NOT SHOWN ON THESE PLANS. SEE SPECIAL PROVISIONS.
2. PLACE DELINEATORS 2-6 FEET OUTSIDE THE SHOULDER EDGE.
USE THE SAME OFFSET DISTANCE FOR ALL DELINEATORS PLACED AT THE SAME LOCATION.

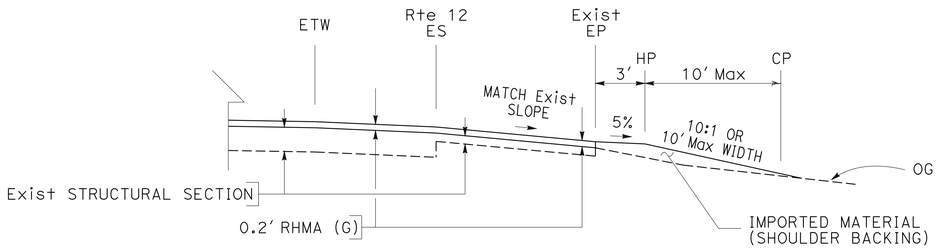

SECTION A-A

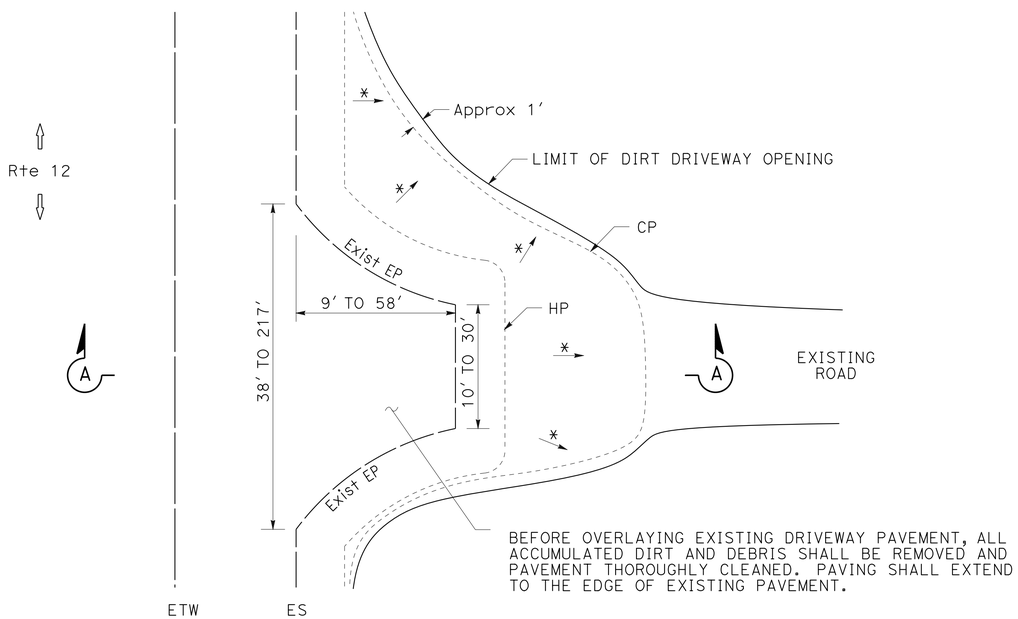

PAVING DETAIL FOR PRIVATE ROADS AND DRIVEWAYS (TYPICAL)

SEE SUMMARY OF QUANTITIES FOR LOCATIONS.
* = IMPORTED MATERIAL (SHOULDER BACKING)
TO BE PLACED AT 10:1 OR 10' WIDTH Max.

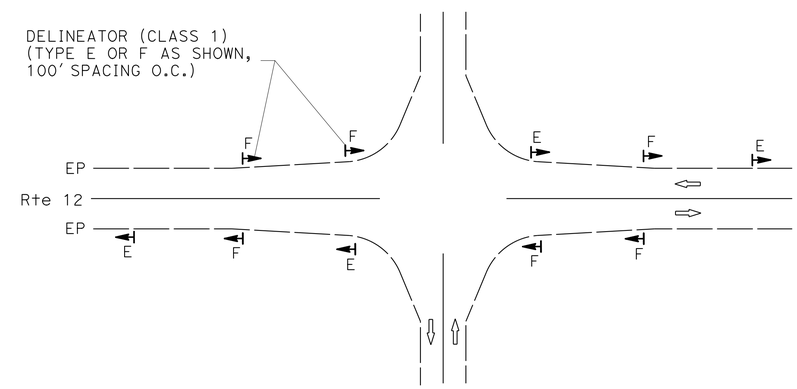

DELINEATOR PLACEMENT FOR RURAL INTERSECTIONS (TYPICAL)

AT INTERSECTION WITH Rte 160
AT INTERSECTION WITH TERMINOUS ROAD (TWO WAY LEG)
AT INTERSECTION WITH BRANNON ISLAND ROAD

CONSTRUCTION DETAILS

NO SCALE

C-3

REVISED BY | DATE REVISED
JUSTIN UNCK | JERRY CAGLE
CALCULATED-DESIGNED BY | CHECKED BY
FUNCTIONAL SUPERVISOR
MOHAMMAD U. SADIQ

STATE OF CALIFORNIA - DEPARTMENT OF TRANSPORTATION
Caltrans DIVISION OF ENGINEERING

LAST REVISION 00-00-00 | DATE PLOTTED => 14-MAY-2012 | TIME PLOTTED => 11:21

Dist	COUNTY	ROUTE	POST MILES TOTAL PROJECT	SHEET No.	TOTAL SHEETS
03	Sac	12	0.3/6.1	7	57

REGISTERED CIVIL ENGINEER 5-7-12 DATE

5-14-12
PLANS APPROVAL DATE

REGISTERED PROFESSIONAL ENGINEER JUSTIN A. UNCK No. 65889 Exp. 12-31-13 CIVIL STATE OF CALIFORNIA

THE STATE OF CALIFORNIA OR ITS OFFICERS OR AGENTS SHALL NOT BE RESPONSIBLE FOR THE ACCURACY OR COMPLETENESS OF SCANNED COPIES OF THIS PLAN SHEET.

NOTES: 1. EXISTING UTILITY FACILITIES ARE NOT SHOWN ON THESE PLANS. SEE SPECIAL PROVISIONS.

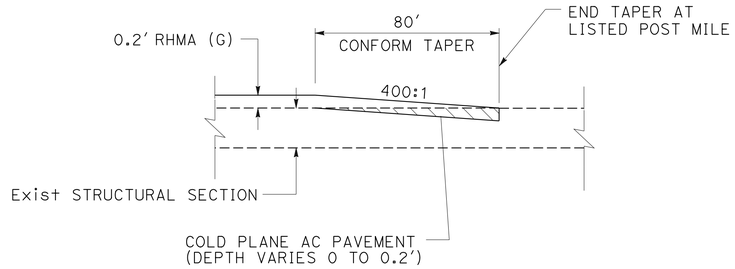

TYPICAL CONFORM TAPER AT
PM 0.424
PM 3.59
PM 3.64
PM 5.67
PM 5.77

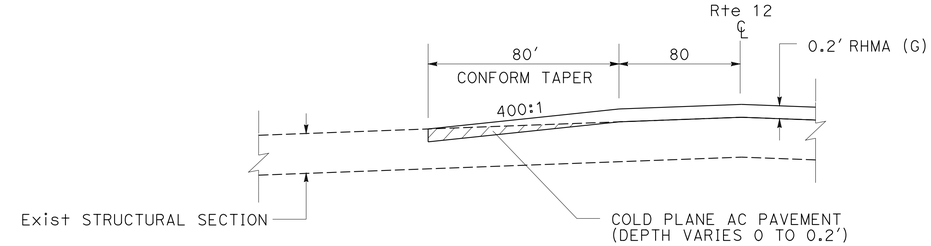

CONFORM TAPER ON RTE 160

CONFORM TAPER

LOCATION	"A"
TERMINOUS Rd, TWO WAY LEG	98'
BRANNON ISLAND Rd	48'

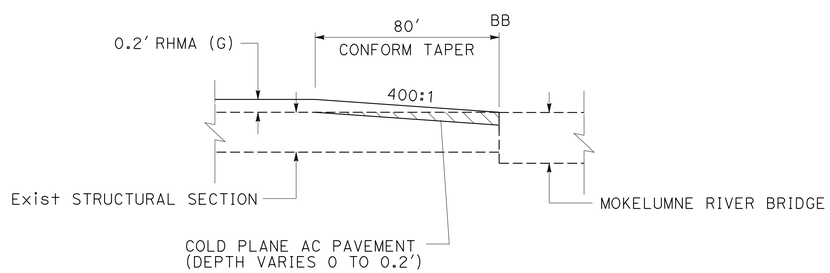

CONFORM TAPER AT MOKELUMNE RIVER BRIDGE
PM 6.06

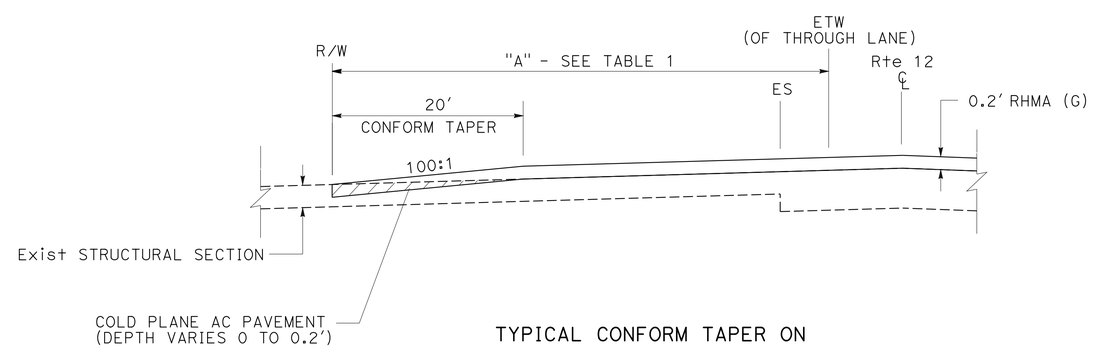

TYPICAL CONFORM TAPER ON
TERMINOUS Rd (TWO WAY LEG)
BRANNON ISLAND Rd

CONSTRUCTION DETAILS

NO SCALE

C-4

STATE OF CALIFORNIA - DEPARTMENT OF TRANSPORTATION
Caltrans DIVISION OF ENGINEERING

FUNCTIONAL SUPERVISOR: MOHAMMAD U. SADIQ
CALCULATED-DESIGNED BY: JUSTIN UNCK
CHECKED BY: JERRY CAGLE
REVISED BY
DATE REVISED

LAST REVISION 00-00-00
DATE PLOTTED => 14-MAY-2012
TIME PLOTTED => 11:21

Dist	COUNTY	ROUTE	POST MILES TOTAL PROJECT	SHEET No.	TOTAL SHEETS
03	Sac	12	0.3/6.1	8	57

REGISTERED CIVIL ENGINEER 5-7-12 DATE

5-14-12
PLANS APPROVAL DATE

REGISTERED PROFESSIONAL ENGINEER JUSTIN A. UNCK No. 65889 Exp. 12-31-13 CIVIL STATE OF CALIFORNIA

THE STATE OF CALIFORNIA OR ITS OFFICERS OR AGENTS SHALL NOT BE RESPONSIBLE FOR THE ACCURACY OR COMPLETENESS OF SCANNED COPIES OF THIS PLAN SHEET.

NOTES: 1. EXISTING UTILITY FACILITIES ARE NOT SHOWN ON THESE PLANS. SEE SPECIAL PROVISIONS.

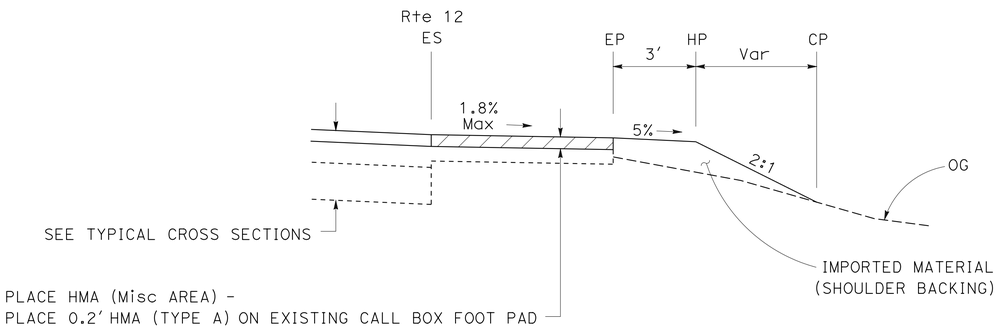

SECTION A-A

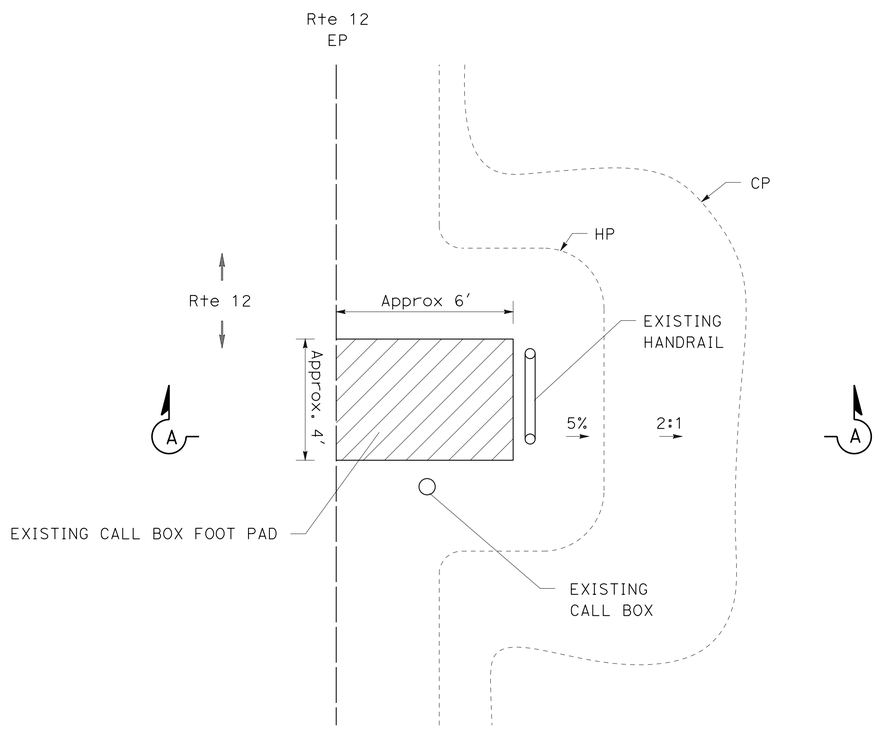

PLAN VIEW

CALL BOXES (TYPICAL)
PM 1.52 Rt
PM 5.56 Rt

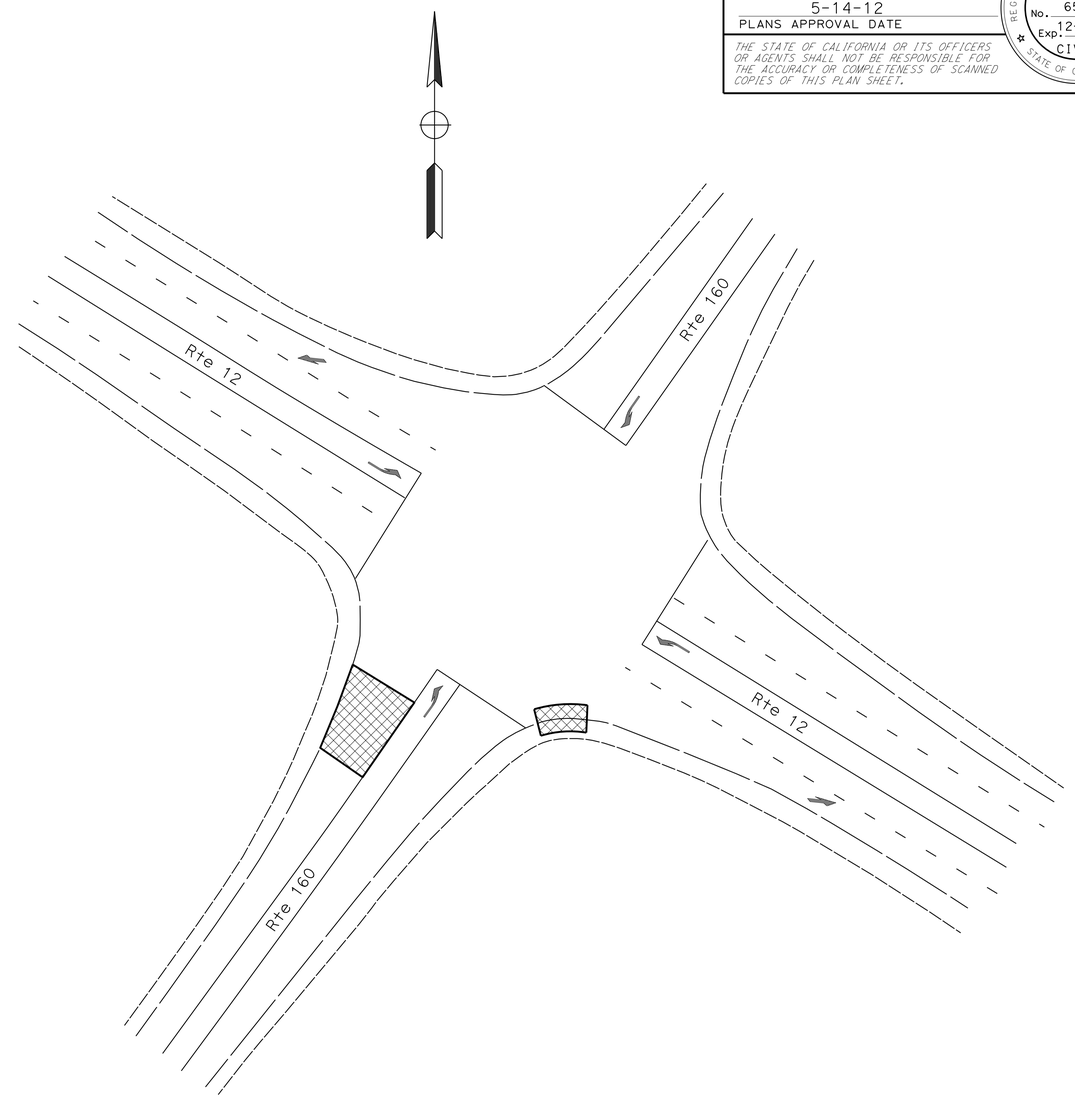

FULL DEPTH DIGOUTS ON Rte 160 AT INTERSECTION WITH Rte 12

EXACT LOCATIONS OF DIGOUTS TO BE DETERMINED BY THE ENGINEER.

FULL DEPTH DIGOUT - SEE SUMMARY OF QUANTITIES FOR DETAILS.

CONSTRUCTION DETAILS

NO SCALE

C-5

STATE OF CALIFORNIA - DEPARTMENT OF TRANSPORTATION
Caltrans DIVISION OF ENGINEERING

FUNCTIONAL SUPERVISOR: MOHAMMAD U. SADIQ
CALCULATED-DESIGNED BY: JUSTIN UNCK
CHECKED BY: JERRY CAGLE
REVISED BY
DATE REVISED

LAST REVISION 00-00-00
DATE PLOTTED => 14-MAY-2012
TIME PLOTTED => 11:21

Dist	COUNTY	ROUTE	POST MILES TOTAL PROJECT	SHEET No.	TOTAL SHEETS
03	Sac	12	0.3/6.1	9	57

REGISTERED CIVIL ENGINEER 5-7-12 DATE

5-14-12
PLANS APPROVAL DATE

REGISTERED PROFESSIONAL ENGINEER JUSTIN A. UNCK No. 65889 Exp. 12-31-13 CIVIL STATE OF CALIFORNIA

THE STATE OF CALIFORNIA OR ITS OFFICERS OR AGENTS SHALL NOT BE RESPONSIBLE FOR THE ACCURACY OR COMPLETENESS OF SCANNED COPIES OF THIS PLAN SHEET.

NOTES:

1. EXISTING UTILITY FACILITIES ARE NOT SHOWN ON THESE PLANS. SEE SPECIAL PROVISIONS.
2. THIS DETAIL TO BE USED ON LINE POSTS ONLY. DO NOT USE ON TRANSITION RAILING OR TERMINAL SYSTEM POSTS.
3. ALTERNATIVE 1 IS THE PREFERRED ALTERNATIVE AND SHOULD BE USED WHEN POSSIBLE.
4. USE ALTERNATIVE 2 OR ALTERNATIVE 3 WHEN ONE POST IS OMITTED.
5. USE ALTERNATIVE 4 WHEN TWO POSTS ARE OMITTED.
6. FOR OTHER DETAILS, SEE STANDARD PLAN RSP A77A1 AND RSP A77A2.

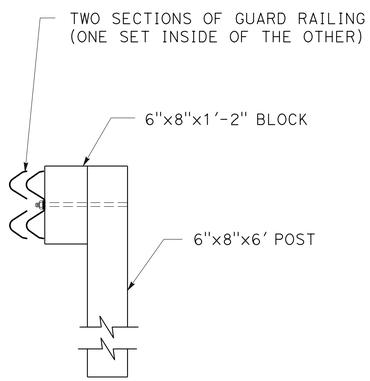

SECTION A-A

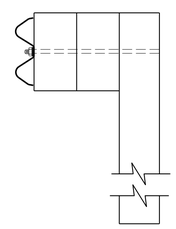

ALTERNATIVE 1
USE TWO BLOCKS

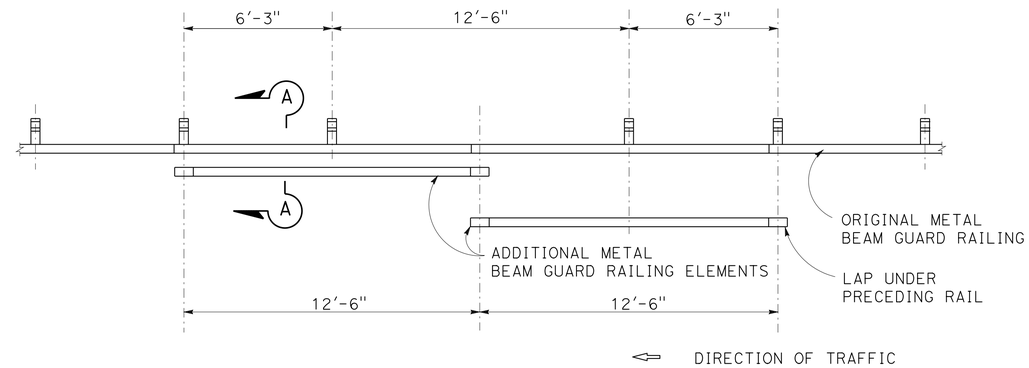

ALTERNATIVE 2
ONE POST OMITTED (SPLICE IN CENTER)

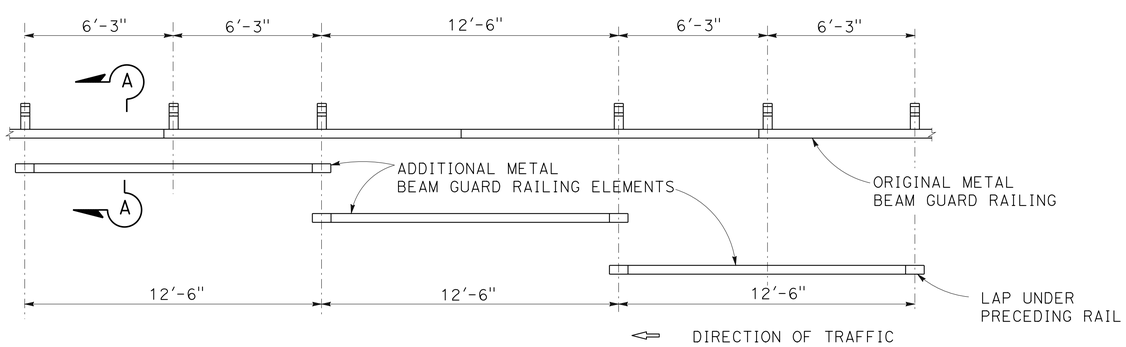

ALTERNATIVE 3
ONE POST OMITTED (SPLICE AT POSTS)

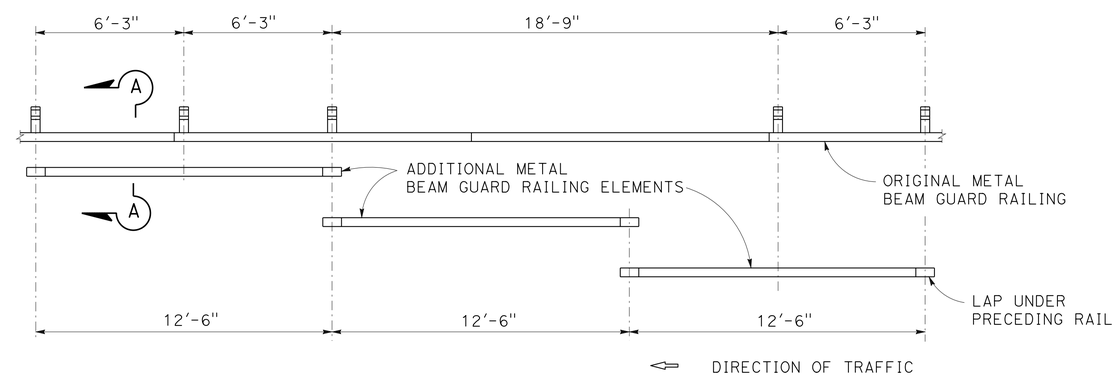

ALTERNATIVE 4
TWO POSTS OMITTED

MBGR ADJUSTMENT AT OBSTRUCTIONS

CONSTRUCTION DETAILS

NO SCALE

C-6

STATE OF CALIFORNIA - DEPARTMENT OF TRANSPORTATION
Caltrans® DIVISION OF ENGINEERING

FUNCTIONAL SUPERVISOR: MOHAMMAD U. SADIQ
CALCULATED-DESIGNED BY: JUSTIN UNCK
CHECKED BY: JERRY CAGLE
REVISED BY
DATE REVISED

LAST REVISION 00-00-00
DATE PLOTTED => 14-MAY-2012
TIME PLOTTED => 11:21

Dist	COUNTY	ROUTE	POST MILES TOTAL PROJECT	SHEET No.	TOTAL SHEETS
03	Sac	12	0.3/6.1	10	57

REGISTERED CIVIL ENGINEER 5-7-12 DATE

5-14-12
PLANS APPROVAL DATE

REGISTERED PROFESSIONAL ENGINEER JUSTIN A. UNCK No. 65889 Exp. 12-31-13 CIVIL STATE OF CALIFORNIA

THE STATE OF CALIFORNIA OR ITS OFFICERS OR AGENTS SHALL NOT BE RESPONSIBLE FOR THE ACCURACY OR COMPLETENESS OF SCANNED COPIES OF THIS PLAN SHEET.

NOTES: 1. EXISTING UTILITY FACILITIES ARE NOT SHOWN ON THESE PLANS. SEE SPECIAL PROVISIONS.

LEGEND

REPLACE AC SURFACING

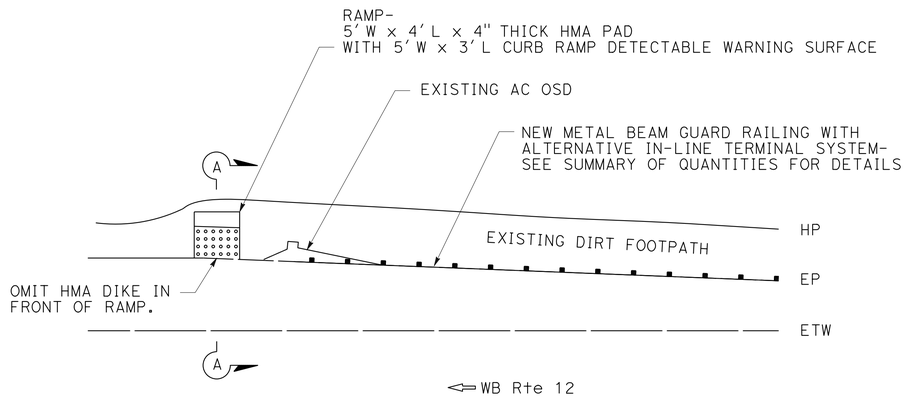

PLAN VIEW

RAMP NEAR MOKELUMNE RIVER BRIDGE

PM 6.0 Lt

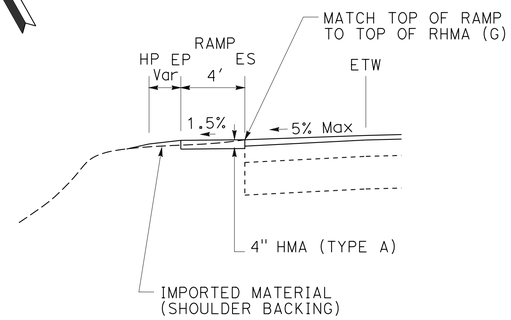

SECTION A-A

ADJUST SHOULDER PAVING THICKNESS TO MAINTAIN A CROSS SLOPE OF 5% MAXIMUM IN FRONT OF RAMP

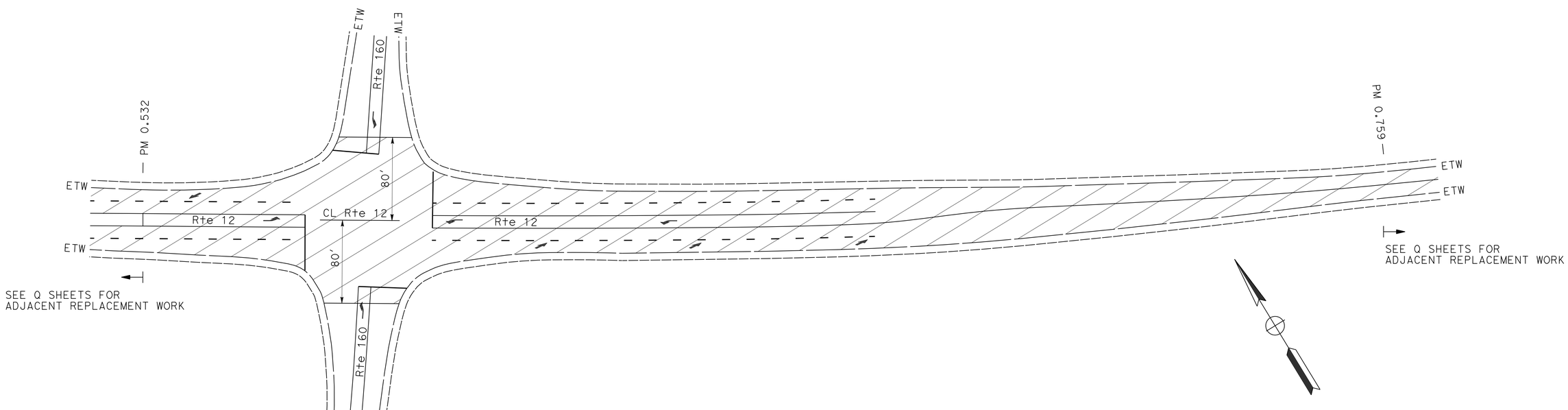

REPLACE AC SURFACING AT RTE 12/160 INTERSECTION

PM 0.532 TO 0.759

SEE SUMMARY OF QUANTITIES FOR ADJACENT REPLACEMENT WORK

CONSTRUCTION DETAILS

NO SCALE

C-7

STATE OF CALIFORNIA - DEPARTMENT OF TRANSPORTATION
Caltrans DIVISION OF ENGINEERING

FUNCTIONAL SUPERVISOR: MOHAMMAD U. SADIQ

CALCULATED-DESIGNED BY: JUSTIN UNCK
CHECKED BY: JERRY CAGLE

REVISED BY | DATE REVISED

LAST REVISION 00-00-00 | DATE PLOTTED => 14-MAY-2012 | TIME PLOTTED => 11:21

Dist	COUNTY	ROUTE	POST MILES TOTAL PROJECT	SHEET No.	TOTAL SHEETS
03	Sac	12	0.3/6.1	11	57

REGISTERED CIVIL ENGINEER 5-7-12 DATE

5-14-12
PLANS APPROVAL DATE

REGISTERED PROFESSIONAL ENGINEER JUSTIN A. UNCK No. 65889 Exp. 12-31-13 CIVIL STATE OF CALIFORNIA

THE STATE OF CALIFORNIA OR ITS OFFICERS OR AGENTS SHALL NOT BE RESPONSIBLE FOR THE ACCURACY OR COMPLETENESS OF SCANNED COPIES OF THIS PLAN SHEET.

NOTES:
1. EXISTING UTILITY FACILITIES ARE NOT SHOWN ON THESE PLANS. SEE SPECIAL PROVISIONS.
2. COMPLETE PROFILE CORRECTIONS BEFORE PLACING 0.2′ RHMA (G). SEE TYPICAL CROSS SECTIONS.
3. EXACT LOCATIONS, LIMITS AND SHAPE OF PROFILE CORRECTIONS AND FULL DEPTH DIGOUTS TO BE DETERMINED BY THE ENGINEER.
4. PAVING TO EXTEND FULL WIDTH OF ROAD. CROSS SLOPE SHALL BE 2% FOR LANES AND 5% FOR SHOULDERS, OR AS DIRECTED BY THE ENGINEER.

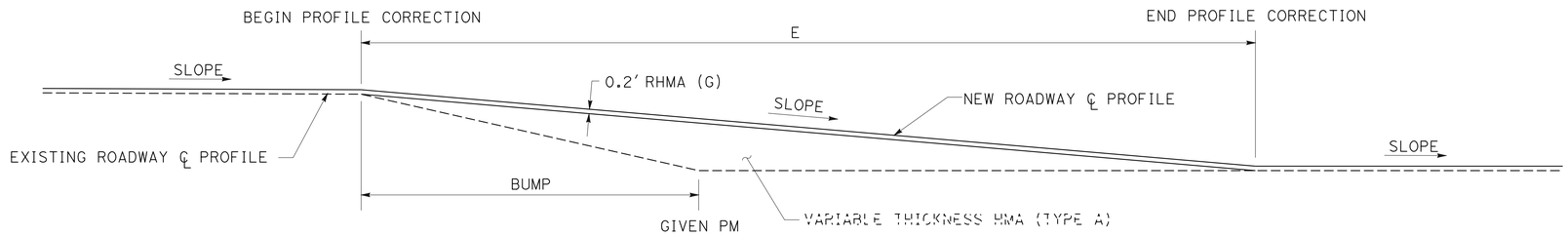

LENGTH "E"

PM	FT
4.77	150
5.23	320

PROFILE CORRECTIONS (TYPICAL)
PROFILE VIEW
PM 4.77
PM 5.23

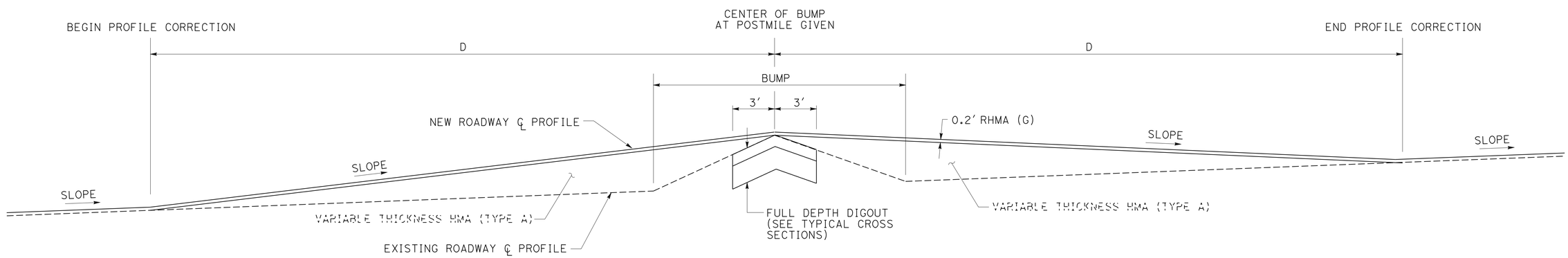

LENGTH "D"

PM	FT
1.85	198
1.96	149
2.07	193
2.83	230
3.06	198
3.40	238
5.39	180

PROFILE CORRECTIONS (TYPICAL)
PROFILE VIEW
PM 1.85
PM 1.96
PM 2.07
PM 2.83
PM 3.06
PM 3.40
PM 5.39

CONSTRUCTION DETAILS

NO SCALE

C-8

STATE OF CALIFORNIA - DEPARTMENT OF TRANSPORTATION
Caltrans® DIVISION OF ENGINEERING

FUNCTIONAL SUPERVISOR: MOHAMMAD U. SADIQ
CALCULATED-DESIGNED BY: JUSTIN UNCK
CHECKED BY: JERRY CAGLE
REVISED BY
DATE REVISED

LAST REVISION 00-00-00 | DATE PLOTTED => 14-MAY-2012 | TIME PLOTTED => 11:21

Dist	COUNTY	ROUTE	POST MILES TOTAL PROJECT	SHEET No.	TOTAL SHEETS
03	Sac	12	0.3/6.1	12	57

REGISTERED CIVIL ENGINEER 5-7-12 DATE

5-14-12
PLANS APPROVAL DATE

REGISTERED PROFESSIONAL ENGINEER
JUSTIN A. UNCK
No. 65889
Exp. 12-31-13
CIVIL
STATE OF CALIFORNIA

THE STATE OF CALIFORNIA OR ITS OFFICERS OR AGENTS SHALL NOT BE RESPONSIBLE FOR THE ACCURACY OR COMPLETENESS OF SCANNED COPIES OF THIS PLAN SHEET.

NOTE: 1. EXISTING UTILITY FACILITIES ARE NOT SHOWN ON THESE PLANS. SEE SPECIAL PROVISIONS.
2. POST SPACING AND OTHER DIMENSINOS TO BE VERIFIED IN THE FIELD BY THE CONTRACTOR.

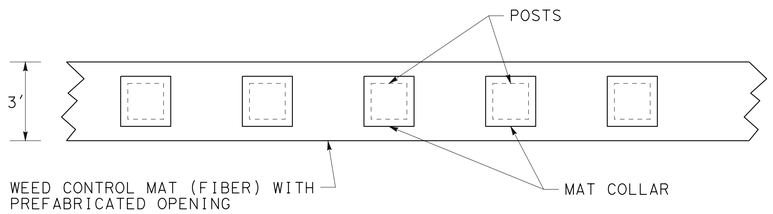

PLAN

GUARD RAILING WEED CONTROL MAT (FIBER)
AT WOOD POST

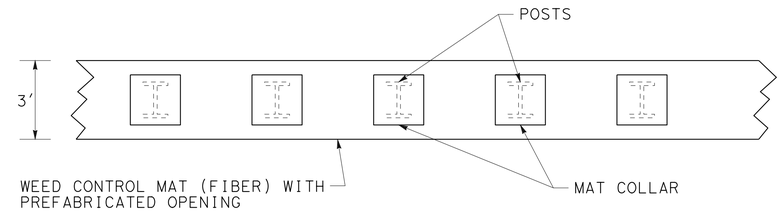

PLAN

GUARD RAILING WEED CONTROL MAT (FIBER)
AT STEEL POST

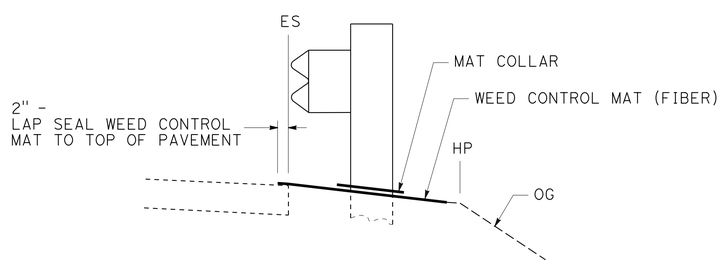

GUARD RAILING WEED CONTROL MAT (FIBER)
WITHOUT DIKE

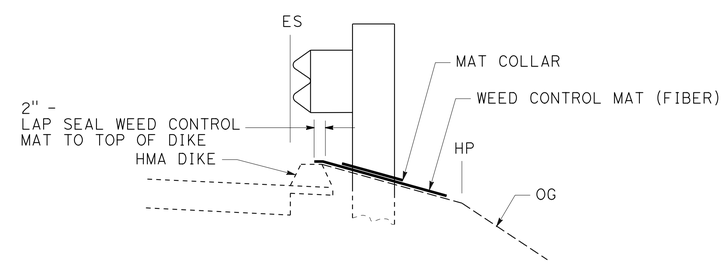

GUARD RAILING WEED CONTROL MAT (FIBER)
WITH DIKE

CONSTRUCTION DETAILS

NO SCALE

C - 9

STATE OF CALIFORNIA - DEPARTMENT OF TRANSPORTATION
Caltrans DIVISION OF ENGINEERING

FUNCTIONAL SUPERVISOR: MOHAMMAD U. SADIQ
CALCULATED-DESIGNED BY: JENNIFER KURTH
CHECKED BY: JUSTIN UNCK
REVISED BY
DATE REVISED

LAST REVISION 00-00-00 | DATE PLOTTED => 14-MAY-2012 | TIME PLOTTED => 11:21

Dist	COUNTY	ROUTE	POST MILES TOTAL PROJECT	SHEET No.	TOTAL SHEETS
03	Sac	12	0.3/6.1	13	57

REGISTERED CIVIL ENGINEER 5-7-12 DATE

5-14-12
PLANS APPROVAL DATE

REGISTERED PROFESSIONAL ENGINEER JUSTIN A. UNCK No. 65889 Exp. 12-31-13 CIVIL STATE OF CALIFORNIA

THE STATE OF CALIFORNIA OR ITS OFFICERS OR AGENTS SHALL NOT BE RESPONSIBLE FOR THE ACCURACY OR COMPLETENESS OF SCANNED COPIES OF THIS PLAN SHEET.

NOTES: 1. EXISTING UTILITY FACILITIES ARE NOT SHOWN ON THESE PLANS. SEE SPECIAL PROVISIONS.

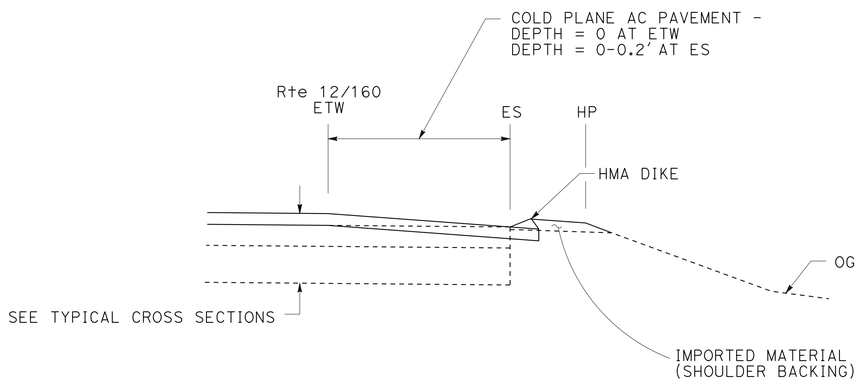

SECTION
BETWEEN POINT A AND POINT B

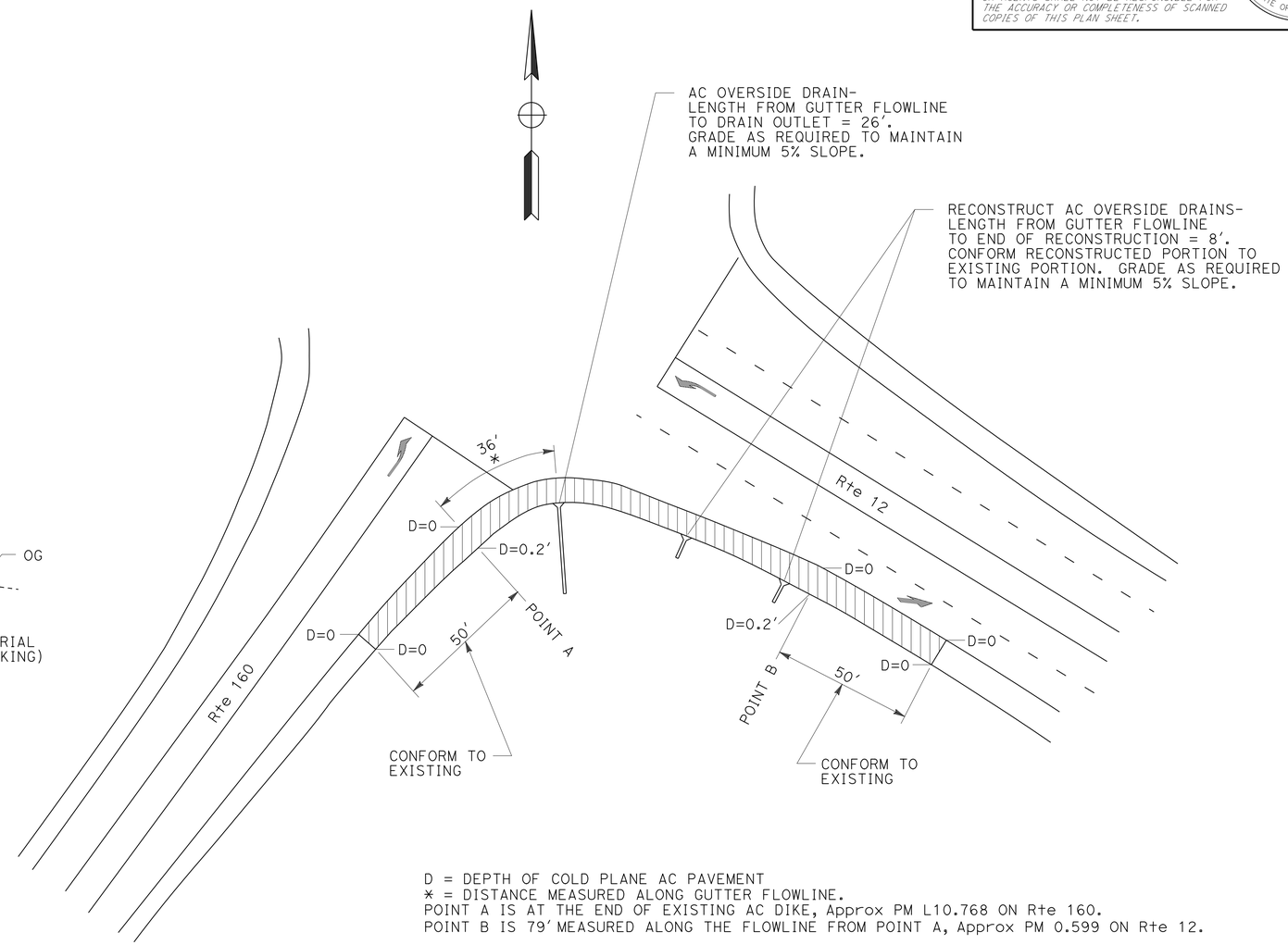

D = DEPTH OF COLD PLANE AC PAVEMENT
* = DISTANCE MEASURED ALONG GUTTER FLOWLINE.
POINT A IS AT THE END OF EXISTING AC DIKE, Approx PM L10.768 ON Rte 160.
POINT B IS 79′ MEASURED ALONG THE FLOWLINE FROM POINT A, Approx PM 0.599 ON Rte 12.

COLD PLANE SHOULDER AND AC OVERSIDE DRAINS AT Rte 12/160 INTERSECTION

EXACT LOCATIONS OF WORK TO BE DETERMINED BY THE ENGINEER.

COLD PLANE AC PAVEMENT - DEPTH VARIES 0 TO 0.2′

CONSTRUCTION DETAILS

NO SCALE

C-10

REVISED BY | DATE REVISED

JUSTIN UNCK | JERRY CAGLE
CALCULATED-DESIGNED BY | CHECKED BY

FUNCTIONAL SUPERVISOR
MOHAMMAD U. SADIQ

STATE OF CALIFORNIA - DEPARTMENT OF TRANSPORTATION
Caltrans DIVISION OF ENGINEERING

LAST REVISION 00-00-00 | DATE PLOTTED => 14-MAY-2012 | TIME PLOTTED => 11:21

Dist	COUNTY	ROUTE	POST MILES TOTAL PROJECT	SHEET No.	TOTAL SHEETS
03	Sac	12	0.3/6.1	14	57

REGISTERED CIVIL ENGINEER 5-7-12 DATE

5-14-12
PLANS APPROVAL DATE

REGISTERED PROFESSIONAL ENGINEER JUSTIN A. UNCK No. 65889 Exp. 12-31-13 CIVIL STATE OF CALIFORNIA

THE STATE OF CALIFORNIA OR ITS OFFICERS OR AGENTS SHALL NOT BE RESPONSIBLE FOR THE ACCURACY OR COMPLETENESS OF SCANNED COPIES OF THIS PLAN SHEET.

NOTES: 1. EXACT SIGN LOCATIONS TO BE DETERMINED BY THE ENGINEER.
2. EXISTING UTILITY FACILITIES ARE NOT SHOWN ON THESE PLANS. SEE SPECIAL PROVISIONS.

LEGEND

- SIGN - SINGLE POST
- SIGN - DOUBLE POST
- SIGN - BARRICADE MOUNT

CONSTRUCTION AREA SIGNS (STATIONARY MOUNTED)

SIGN LETTER	SIGN CODE FEDERAL	SIGN CODE CALIFORNIA	PANEL SIZE	SIGN MESSAGE	No. AND SIZE OF POST(S)	No. OF SIGNS
A	G20-1(6)		60" X 30"	ROAD WORK NEXT 6 MILES	2 - 4" X 6"	1
B	W20-1	C23	48" X 48"	ROAD WORK AHEAD	1 - 6" X 6"	2
D		C14	48" X 24"	END ROAD WORK	1 - 4" X 6"	2
E	G20-1(6)		60" X 30"	ROAD WORK NEXT 6 MILES	MOUNT ON TYPE III BARRICADE	1
F	W20-1	C23	48" X 48"	ROAD WORK AHEAD	MOUNT ON TYPE III BARRICADE	4
G		C40(Mod)	72" X 42"	TRAFFIC FINES DOUBLED IN WORK ZONES	MOUNT ON TYPE III BARRICADE	2
H		C14	48" X 24"	END ROAD WORK	MOUNT ON TYPE III BARRICADE	6

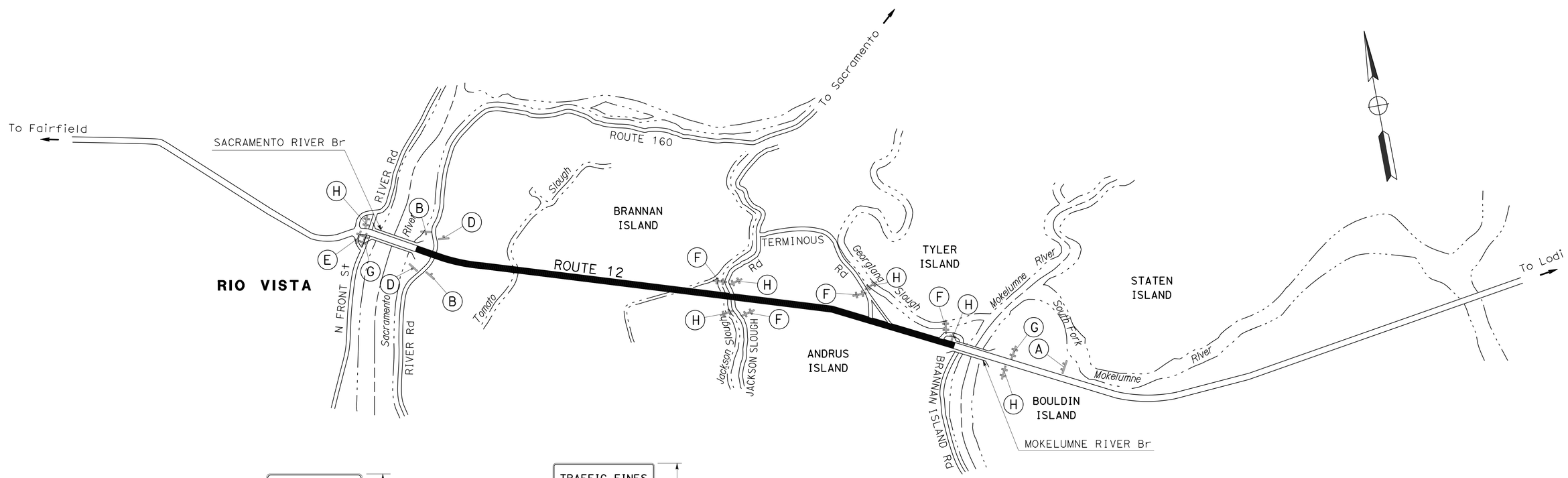

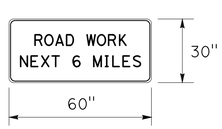

6" C SERIES LETTERS.
RETROREFLECTIVE ORANGE BACKGROUND
WITH BLACK LEGEND AND BORDER.

SIGN LETTER Ⓐ AND Ⓔ DETAILS

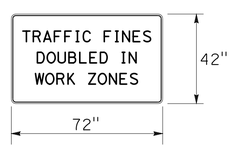

6" D SERIES LETTERS.
RETROREFLECTIVE WHITE BACKGROUND
WITH BLACK LEGEND AND BORDER.

SIGN LETTER Ⓖ DETAILS

APPROVED FOR CONSTRUCTION AREA SIGN WORK ONLY

CONSTRUCTION AREA SIGNS

NO SCALE

CS-1

STATE OF CALIFORNIA - DEPARTMENT OF TRANSPORTATION
Caltrans® DIVISION OF ENGINEERING

FUNCTIONAL SUPERVISOR: MOHAMMAD U. SADIQ
CALCULATED-DESIGNED BY: JUSTIN UNCK
CHECKED BY: JOHN KEBER
REVISED BY
DATE REVISED

LAST REVISION 00-00-00
DATE PLOTTED => 14-MAY-2012
TIME PLOTTED => 11:21

Dist	COUNTY	ROUTE	POST MILES TOTAL PROJECT	SHEET No.	TOTAL SHEETS
03	Sac	12	0.3/6.1	15	57

REGISTERED CIVIL ENGINEER 5-7-12 DATE

5-14-12
PLANS APPROVAL DATE

REGISTERED PROFESSIONAL ENGINEER JUSTIN A. UNCK No. 65889 Exp. 12-31-13 CIVIL STATE OF CALIFORNIA

THE STATE OF CALIFORNIA OR ITS OFFICERS OR AGENTS SHALL NOT BE RESPONSIBLE FOR THE ACCURACY OR COMPLETENESS OF SCANNED COPIES OF THIS PLAN SHEET.

PROFILE CORRECTIONS

ROAD	LOCATION	APPROXIMATE PM	HMA (TYPE A)	TACK COAT
	L+/R+		TON	TON
Rte 12	L+/R+	1.85	261.8	0.733
	L+/R+	1.96	137.2	0.552
	L+/R+	2.07	247.8	0.715
	L+/R+	2.83	364.0	0.852
	L+/R+	3.06	261.8	0.733
	L+/R+	3.40	392.0	0.881
	L+/R+	4.77	130.2	0.278
	L+/R+	5.23	750.4	0.593
	L+/R+	5.39	212.8	0.667
		SUBTOTAL	2,758.0	6.004
		TOTAL	*	*

* SEE ROADWAY QUANTITIES FOR TOTAL.

NOTES:
1. PROFILE CORRECTIONS MUST BE COMPLETED BEFORE PLACING 0.2' RHMA (G).
2. EXACT LOCATION AND LIMITS OF PROFILE CORRECTIONS TO BE DETERMINED BY THE ENGINEER.

CALL BOXES AND RAMPS

ROAD	LOCATION	APPROXIMATE PM	PLACE HMA (Misc AREA)	HMA (TYPE A)	TACK COAT	CURB RAMP DETECTABLE WARNING SURFACE	NOTES
	L+/R+		SQYD	TON	TON	SQFT	
Rte 12	R+	1.52	2.7	0.4	0.0006		PAVE CALL BOX PAD
	R+	5.56	2.7	0.4	0.0006		PAVE CALL BOX PAD
	L+	6.00	2.2	0.5		15.0	4" THICK HMA RAMP
		SUBTOTAL	7.6	1.3	0.001		
		TOTAL	**	*	*	15.0	

* SEE ROADWAY QUANTITIES FOR TOTAL.
** SEE AC OVERSIDE DRAIN FOR TOTAL.

AC OVERSIDE DRAIN

ROAD	LOCATION	APPROXIMATE PM	PLACE HMA (Misc AREA)	HMA (TYPE A)	NOTES
	L+/R+		SQYD	TON	
Rte 12	R+	0.590	3.7	0.6	RECONSTRUCT EXISTING DRAIN. SEE CONSTRUCTION DETAILS
	R+	0.599	3.7	0.6	RECONSTRUCT EXISTING DRAIN. SEE CONSTRUCTION DETAILS
Rte 160	R+	10.768	10.2	1.7	NEW DRAIN. SEE CONSTRUCTION DETAILS
			7.6		FROM CALL BOXES AND RAMPS
		SUBTOTAL		2.9	
		TOTAL	25.2	*	

* SEE ROADWAY QUANTITIES FOR TOTAL.

COLD PLANE AC PAVEMENT

ROAD	LOCATION	APPROXIMATE PM	COLD PLANE AC PAVEMENT	NOTES
	L+/R+		SQYD	
Rte 12	L+/R+	0.424	462	CONFORM TAPER AT 230' EAST OF THE SACRAMENTO RIVER Br
	L+/R+	3.59	462	EAST END OF LOCATION 1
	L+/R+	3.64	497	WEST END OF LOCATION 2
	L+/R+	5.67	360	EAST END OF LOCATION 2
	L+/R+	5.77	483	WEST END OF LOCATION 3
	L+/R+	6.06	295	CONFORM TAPER AT MOKELUMNE RIVER BRIDGE
Rte 160			630	CONFORM TAPER ON Rte 160, NORTH LEG
			648	CONFORM TAPER ON Rte 160, SOUTH LEG
SIDE ROAD AT PM 5.65			71	CONFORM TAPER ON TERMINOUS ROAD, TWO WAY LEG
SIDE ROAD AT PM 5.80			120	CONFORM TAPER ON BRANNON ISLAND ROAD
Rte 12/160 INTERSECTION			203	COLD PLANE SHOUDER AT Rte 12/160 INTERSECTION
		TOTAL	4,231	

CRACK TREATMENT

ROAD	CRACK TREATMENT	NOTES
	LNMI	
Rte 12, Rte 160, AND ALL PRIVATE AND PUBLIC SIDE ROADS	12.5	TREAT CRACKS ON ALL AREAS TO BE PAVED WITH 0.2' RHMA (G).
TOTAL	12.5	

SUMMARY OF QUANTITIES

Q-1

STATE OF CALIFORNIA - DEPARTMENT OF TRANSPORTATION
Caltrans DIVISION OF ENGINEERING

FUNCTIONAL SUPERVISOR: MOHAMMAD U. SADIQ
CALCULATED-DESIGNED BY: JUSTIN UNCK
CHECKED BY: JERRY CAGLE
REVISED BY / DATE REVISED

LAST REVISION 00-00-00 | DATE PLOTTED => 14-MAY-2012 | TIME PLOTTED => 11:21

Dist	COUNTY	ROUTE	POST MILES TOTAL PROJECT	SHEET No.	TOTAL SHEETS
03	Sac	12	0.3/6.1	16	57

REGISTERED CIVIL ENGINEER 5-7-12 DATE

5-14-12
PLANS APPROVAL DATE

REGISTERED PROFESSIONAL ENGINEER JUSTIN A. UNCK No. 65889 Exp. 12-31-13 CIVIL STATE OF CALIFORNIA

THE STATE OF CALIFORNIA OR ITS OFFICERS OR AGENTS SHALL NOT BE RESPONSIBLE FOR THE ACCURACY OR COMPLETENESS OF SCANNED COPIES OF THIS PLAN SHEET.

DELINEATORS (CLASS 1)

ROAD	LOCATION	APPROXIMATE PM	DELINEATOR (CLASS 1)		NOTES
			TYPE E	TYPE F	
	Lt/Rt		EA	EA	
Rte 12	Lt	0.424 TO 0.493		3	TO DELINEATE LANE DROP. PLACE AT 200' OC ON RECONSTRUCTED MBGR
	Lt/Rt	0.57	4	6	AT ROUTE 160
	Lt	5.65	2	3	AT TERMINOUS ROAD (TWO WAY LEG)
	Lt	5.80	2	3	AT BRANNON ISLAND ROAD
		SUBTOTAL	8	15	
		TOTAL	23		

NOTES: 1. DELINEATORS SHALL NOT BE PLACED WITHIN 2' HORIZONTALLY OF ANY HIGH OR LOW RISK FACILITIES IDENTIFIED DURING CONSTRUCTION UTILITY FIELD MARK OUTS. SEE PROJECT SPECIAL PROVISIONS.

BARRICADES

LOCATION	TYPE III BARRICADE
	EA
SEE CONSTRUCTION AREAS SIGN SHEET	13
TOTAL	13

FULL DEPTH DIGOUTS

ROAD	LOCATION	APPROXIMATE PM		LENGTH	WIDTH	** THICKNESS OF		ROADWAY EXCAVATION	HMA (TYPE A)	CLASS 2 AB	TACK COAT	NOTES
						HMA (TYPE A)	CLASS 2 AB					
	Lt/Rt	FROM	TO	FT	FT	FT	FT	CY	TON	CY	TON	
Rte 12	Lt/Rt	1.464	1.469	25	24	0.84	1.00	40.9	36.5	22.2	0.042	AT PROFILE CORRECTION
	Lt/Rt	1.85		6	40	0.84	1.00	16.4	14.6	8.9	0.017	AT PROFILE CORRECTION
	Lt/Rt	1.96		6	40	0.84	1.00	16.4	14.6	8.9	0.017	AT PROFILE CORRECTION
	Lt/Rt	2.07		6	40	0.84	1.00	16.4	14.6	8.9	0.017	AT PROFILE CORRECTION
	Lt/Rt	2.83		6	40	0.84	1.00	16.4	14.6	8.9	0.017	AT PROFILE CORRECTION
	Lt/Rt	3.06		6	40	0.76	1.00	15.6	13.2	8.9	0.017	AT PROFILE CORRECTION
	Lt/Rt	3.40		6	40	0.81	1.00	16.1	14.1	8.9	0.017	AT PROFILE CORRECTION
	Lt/Rt	5.39		6	40	0.81	1.00	16.1	14.1	8.9	0.017	AT PROFILE CORRECTION
	Rt	0.598	0.602	20	12	0.55	2.30	25.3	9.6	20.4	0.017	#2 LANE
	Rt	0.626	0.629	20	6	0.55	2.30	12.7	4.8	10.2	0.008	RIGHT HALF OF #2 LANE
	Rt	0.638	0.694	300	12	0.55	2.30	380.0	143.6	306.7	0.250	#2 LANE
	Rt	0.825	0.840	80	12	0.76	1.00	62.6	52.9	35.6	0.067	LANE
	Rt	2.675	2.680	25	12	0.84	1.00	20.4	18.3	11.1	0.021	LANE
	Rt	2.905	2.924	100	6	0.84	1.00	40.9	36.5	22.2	0.042	RIGHT HALF OF LANE
Rte 160				40	21-31	0.60	1.85	95.5	45.8	72.1	0.071	AT INTERSECTION WITH Rte 12 SEE CONSTRUCTION DETAILS FOR LOCATION
				20	12	0.60	1.85	21.8	10.4	16.4	0.017	AT INTERSECTION WITH Rte 12 SEE CONSTRUCTION DETAILS FOR LOCATION
							SUBTOTAL		458.2		0.654	
							TOTAL	813.5	*	579.2	*	

* SEE ROADWAY QUANTITIES FOR TOTAL.

** HMA THICKNESS IS APPROXIMATE. ADJUST HMA REPLACEMENT THICKNESS TO MATCH EXISTING PAVEMENT THICKNESS.

NOTES: 1. EXACT LOCATIONS OF FULL DEPTH DIGOUTS TO BE DETERMINED BY THE ENGINEER.

2. FULL DEPTH DIGOUTS SHALL NOT BE COMPLETED WITHIN 2' HORIZONTALLY OF ANY HIGH OR LOW RISK FACILITIES IDENTIFIED DURING CONSTRUCTION UTILITY FIELD MARK OUTS. SEE PROJECT SPECIAL PROVISIONS.

SUMMARY OF QUANTITIES

Q-2

REVISED BY | DATE REVISED
JUSTIN UNCK | JERRY CAGLE
CALCULATED-DESIGNED BY | CHECKED BY
FUNCTIONAL SUPERVISOR
MOHAMMAD U. SADIQ

STATE OF CALIFORNIA - DEPARTMENT OF TRANSPORTATION
Caltrans DIVISION OF ENGINEERING

LAST REVISION 00-00-00 | DATE PLOTTED => 14-MAY-2012 | TIME PLOTTED => 11:21

Dist	COUNTY	ROUTE	POST MILES TOTAL PROJECT	SHEET No.	TOTAL SHEETS
03	Sac	12	0.3/6.1	17	57

REGISTERED CIVIL ENGINEER 5-7-12 DATE

5-14-12
PLANS APPROVAL DATE

REGISTERED PROFESSIONAL ENGINEER JUSTIN A. UNCK No. 65889 Exp. 12-31-13 CIVIL STATE OF CALIFORNIA

THE STATE OF CALIFORNIA OR ITS OFFICERS OR AGENTS SHALL NOT BE RESPONSIBLE FOR THE ACCURACY OR COMPLETENESS OF SCANNED COPIES OF THIS PLAN SHEET.

HMA DIKE

ROAD	LOCATION	APPROXIMATE PM		REMOVE AC DIKE	PLACE HMA DIKE			HMA (TYPE A)	NOTES
					TYPE C	TYPE E	TYPE F		
	Lt/Rt	FROM	TO	LF	LF	LF	LF	TON	
Rte 12	Lt	0.424	0.568	839	63	235	541	13.4	FROM 230′ EAST OF SACRAMENTO RIVER Br TO THE END OF CONFORM TAPER ON Rte 160
	Lt	0.582	0.600	115		115		2.9	NORTHEAST CORNER OF INTERSECTION WITH Rte 160
	Lt	5.970	6.040	339	75	226	38	6.8	WB MOKELUMNE RIVER Br DEPARTURE. PLACE BREAK IN DIKE AT RAMP. SEE Const DETAILS
	Rt	0.434	0.565	774	63	228	483	12.5	FROM 288′ EAST OF SACRAMENTO RIVER Br DEPARTURE
	Rt	0.580	0.602	127		127		3.2	SOUTHEAST CORNER OF INTERSECTION WITH Rte 160
	Rt	5.970	6.040	339	63	226	50	6.9	EB MOKELUMNE RIVER Br APPROACH
		SUBTOTAL						45.7	
		TOTAL		2,533	264	1,157	1,112	*	

* SEE ROADWAY QUANTITIES FOR TOTAL.

NOTES: 1. SEE METAL BEAM GUARD RAILING QUANTITIES AND TYPICAL LAYOUTS IN THE STANDARD PLANS FOR PLACEMENT OF HMA DIKE AT MBGR INSTALLATIONS.
2. TRANSITIONS BETWEEN HMA DIKE TYPES SHOULD BE DONE OVER A 5′ LENGTH TO PROVIDE A SMOOTH TRANSITION.

MARKERS

ROAD	LOCATION	APPROXIMATE PM	LOCATION DESCRIPTION	OBJECT MARKER (TYPE L-1)	HIGHWAY POST MARKER	NOTES
				EA	EA	
Rte 12	Lt	0.50			1	PLACE BEHIND MBGR
	Lt	0.53	WB APPROACH SACRAMENTO RIVER Br	1		PLACE AT MBGR RETURN CAP
	Rt	0.50			1	PLACE BEHIND MBGR
	Rt	3.50			1	
	Rt	6.04	EB APPROACH MOKELUMNE RIVER Br	1		PLACE AT MBGR RETURN CAP
			TOTAL	2	3	

NOTES: 1. MARKERS SHALL NOT BE PLACED WITHIN 2′ HORIZONTALLY OF ANY HIGH OR LOW RISK FACILITIES IDENTIFIED DURING CONSTRUCTION UTILITY FIELD MARK OUTS. SEE PROJECT SPECIAL PROVISIONS.

SUMMARY OF QUANTITIES

Q-3

STATE OF CALIFORNIA - DEPARTMENT OF TRANSPORTATION
Caltrans DIVISION OF ENGINEERING

FUNCTIONAL SUPERVISOR: MOHAMMAD U. SADIQ
CALCULATED-DESIGNED BY: JUSTIN UNCK
CHECKED BY: JERRY CAGLE
REVISED BY / DATE REVISED

LAST REVISION 00-00-00 | DATE PLOTTED => 14-MAY-2012 | TIME PLOTTED => 11:21

Dist	COUNTY	ROUTE	POST MILES TOTAL PROJECT	SHEET No.	TOTAL SHEETS
03	Sac	12	0.3/6.1	18	57

REGISTERED CIVIL ENGINEER 5-7-12 DATE

5-14-12
PLANS APPROVAL DATE

REGISTERED PROFESSIONAL ENGINEER JUSTIN A. UNCK No. 65889 Exp. 12-31-13 CIVIL STATE OF CALIFORNIA

THE STATE OF CALIFORNIA OR ITS OFFICERS OR AGENTS SHALL NOT BE RESPONSIBLE FOR THE ACCURACY OR COMPLETENESS OF SCANNED COPIES OF THIS PLAN SHEET.

IMPORTED MATERIAL (SHOULDER BACKING)

ROAD	LOCATION	APPROXIMATE PM		IMPORTED MATERIAL (SHOULDER BACKING)	(N) SEE NOTE 1	DESCRIPTION
	L+/R+	FROM	TO	TON		
Rte 12	L+/R+	0.424	3.59	1,910.0		BACKING FOR 0.2' RHMA (G) OVERLAY IN LOCATION 1. SEE NOTE 2
	L+/R+	3.64	5.67	1,231.0		BACKING FOR 0.2' RHMA (G) OVERLAY IN LOCATION 2. SEE NOTE 2
	L+/R+	5.77	6.06	175.9		BACKING FOR 0.2' RHMA (G) OVERLAY IN LOCATION 3. SEE NOTE 2
	L+/R+	1.82	1.89	33.7		BACKING FOR PROFILE CORRECTION
	L+/R+	1.93	1.99	17.8		BACKING FOR PROFILE CORRECTION
	L+/R+	2.03	2.11	32.8		BACKING FOR PROFILE CORRECTION
	L+/R+	2.79	2.87	46.8		BACKING FOR PROFILE CORRECTION
	L+/R+	3.02	3.10	33.7		BACKING FOR PROFILE CORRECTION
	L+/R+	3.35	3.45	50.4		BACKING FOR PROFILE CORRECTION
	L+/R+	4.76	4.78	6.5		BACKING FOR PROFILE CORRECTION
	L+/R+	5.20	5.26	29.8		BACKING FOR PROFILE CORRECTION
	L+/R+	5.36	5.42	27.2		BACKING FOR PROFILE CORRECTION
	L+	0.60	0.80	91.0	X	ADDITIONAL BACKING FOR PULLOUT
	L+	1.15		8.9	X	ADDITIONAL BACKING FOR PRIVATE ROAD
	L+	1.45		21.5	X	ADDITIONAL BACKING FOR PRIVATE ROAD/PULLOUT
	L+	1.87		5.0	X	ADDITIONAL BACKING FOR PRIVATE ROAD
	L+	2.50		5.0	X	ADDITIONAL BACKING FOR PRIVATE ROAD
	L+	2.86		7.6	X	ADDITIONAL BACKING FOR PRIVATE ROAD
	L+	3.57	3.59	5.0	X	ADDITIONAL BACKING FOR WIDE SHOULDER
	L+	5.24		5.0	X	ADDITIONAL BACKING FOR PRIVATE ROAD
	R+	0.62	0.69	27.8	X	ADDITIONAL BACKING FOR PULLOUT
	R+	0.70	0.77	8.3	X	ADDITIONAL BACKING FOR WIDE SHOULDER
	R+	1.45		20.2	X	ADDITIONAL BACKING FOR PRIVATE ROAD
	R+	2.49		10.1	X	ADDITIONAL BACKING FOR PRIVATE ROAD
	R+	3.45		3.8	X	ADDITIONAL BACKING FOR DRIVEWAY
	R+	5.24		5.0	X	ADDITIONAL BACKING FOR PRIVATE ROAD
	R+	5.69		5.0	X	ADDITIONAL BACKING FOR PRIVATE ROAD
Rte 160				9.2		BACKING FOR 0.2' RHMA (G) OVERLAY ON NORTH AND SOUTH LEGS OF Rte 160
SIDE ROAD AT PM 5.65				9.2		BACKING FOR 0.2' RHMA (G) OVERLAY ON TWO WAY LEG OF TERMINOUS ROAD
SIDE ROAD AT PM 5.80				3.5		BACKING FOR 0.2' RHMA (G) OVERLAY ON BRANNON ISLAND ROAD
			TOTAL	3,846.7		

(N) - NOT A SEPARATE PAY ITEM, FOR INFORMATION ONLY

NOTES: 1. SEE DETAIL "A" IN TYPICAL CROSS SECTIONS AND THE PAVING DETAIL FOR PRIVATE ROADS AND DRIVEWAYS IN THE CONSTRUCTION DETAILS FOR PLACEMENT INFORMATION.

2. SEE TITLE SHEET FOR LOCATIONS.

SUMMARY OF QUANTITIES

Q-4

STATE OF CALIFORNIA - DEPARTMENT OF TRANSPORTATION
Caltrans DIVISION OF ENGINEERING

FUNCTIONAL SUPERVISOR: MOHAMMAD U. SADIQ
CALCULATED-DESIGNED BY: JUSTIN UNCK
CHECKED BY: JERRY CAGLE
REVISED BY / DATE REVISED

LAST REVISION 00-00-00 | DATE PLOTTED => 14-MAY-2012 | TIME PLOTTED => 11:21

Dist	COUNTY	ROUTE	POST MILES TOTAL PROJECT	SHEET No.	TOTAL SHEETS
03	Sac	12	0.3/6.1	19	57

REGISTERED CIVIL ENGINEER 5-7-12 DATE

5-14-12
PLANS APPROVAL DATE

REGISTERED PROFESSIONAL ENGINEER JUSTIN A. UNCK No. 65889 Exp. 12-31-13 CIVIL STATE OF CALIFORNIA

THE STATE OF CALIFORNIA OR ITS OFFICERS OR AGENTS SHALL NOT BE RESPONSIBLE FOR THE ACCURACY OR COMPLETENESS OF SCANNED COPIES OF THIS PLAN SHEET.

RUMBLE STRIPS

ROAD	LOCATION	APPROXIMATE PM		SHOULDER RUMBLE STRIP (HMA, GROUND-IN INDENTATIONS)	CENTERLINE RUMBLE STRIP (HMA, GROUND-IN INDENTATIONS)	NOTES	BREAKS IN RUMBLE STRIPS (N) - SEE NOTE 1.		DESCRIPTION OF BREAKS IN RUMBLE STRIPS
							Approx LOCATION	LENGTH	
	Lt/Rt/Ctr	FROM	TO	STA	STA		PM	FT	
Rte 12	Lt	0.70	6.04	256.8		BEGIN RUMBLE STRIP EAST OF Rte 12/160 INTERSECTION AND END RUMBLE STRIP AT MBGR TERMINAL SYSTEM AT MOKELUMNE RIVER BRIDGE.	1.460	325	AT PRIVATE ROAD
							359 TO 3.67	375	BETWEEN LOCATIONS 1 AND 2
							5.230	325	AT PRIVATE ROAD
							5.59 TO 5.87	1490	AT TERMINOUS ROAD, ONE WAY AND TWO WAY LEGS, BETWEEN LOCATIONS 2 AND 3, AT AND BRANNON ISLAND Rd
	Ctr	0.60	6.06		275.4	BEGIN RUMBLE STRIP EAST OF Rte 12/160 INTERSECTION AND END RUMBLE STRIP AT MOKELUMNE RIVER BRIDGE.	3.59 TO 3.65	325	BETWEEN LOCATIONS 1 AND 2
							5.615	230	AT TERMINOUS ROAD, TWO WAY LEG
							5.67 TO 5.77	500	BETWEEN LOCATIONS 2 AND 3
							5.801	235	AT BRANNON ISLAND ROAD
	Rt	0.70	6.04	260.2		BEGIN RUMBLE STRIP EAST OF Rte 12/160 INTERSECTION AND END RUMBLE STRIP AT MBGR TERMINAL SYSTEM AT MOKELUMNE RIVER BRIDGE.	1.460	325	AT PRIVATE ROAD
							2.490	325	AT PRIVATE ROAD
							3.450	325	AT PRIVATE ROAD
							3.59 TO 3.67	375	BETWEEN LOCATIONS 1 AND 2
							5.230	325	AT PRIVATE ROADS
							5.67 TO 5.77	500	BETWEEN LOCATION 2 AND 3
			TOTAL	517.0	275.4				

NOTES: 1. DEDUCTIONS FOR BREAKS IN RUMBLE STRIPS ACCOUNTED FOR IN BID QUANTITY LISTED.
2. SEE TITLE SHEET FOR LOCATIONS.
Ctr = CENTER

METAL BEAM GUARD RAIL

ROAD	APPROXIMATE PM		DIRECTION	LOCATION DESCRIPTION	EXISTING MBGR		PROPOSED MBGR					WEED CONTROL MAT (FIBER)	NOTES
					REMOVE MBGR	(N) REMOVE TERMINAL SYSTEM	TRANSITION RAILING (TYPE WB)	METAL BEAM GUARD RAIL	ALTERNATIVE FLARED TERMINAL SYSTEM	ALTERNATIVE IN-LINE TERMINAL SYSTEM	(N) CONNECTIONS TO BARRIER		
	FROM	TO	Lt/Rt		LF	EA	EA	LF	EA	EA	EA	SQYD	
Rte 12	0.424	0.53	Lt	WB APPROACH SACRAMENTO RIVER Br	575	1		537.5	1			210.2	CONNECT TO EXISTING MBGR
	6.04	6.06	Lt	WB DEPARTURE MOKELUMNE RIVER Br	87.5	1	1	12.5		1	1	51.9	REPLACE THE FLARED TERMINAL SYSTEM WITH AN IN-LINE TERMINAL SYSTEM
	0.42	0.53	Rt	EB DEPARTURE SACRAMENTO RIVER Br	575	1		537.5	1			180.5	CONNECT TO EXISTING MBGR
	6.04	6.06	Rt	EB APPROACH MOKELUMNE RIVER Br	87.5	1	1	25	1		1	51.9	
				SUBTOTAL									
				TOTAL	1,325	4	2	1,112.5	3	1	2	494.5	

(N) - NOT A SEPARATE PAY ITEM, FOR INFORMATION ONLY

NOTES: 1. METAL BEAM GUARD RAIL POSTS SHALL NOT BE PLACED WITHIN 2' HORIZONTALLY OF ANY HIGH OR LOW RISK FACILITIES IDENTIFIED DURING CONSTRUCTION UTILITY FIELD MARK OUTS. SEE PROJECT SPECIAL PROVISIONS.
2. REMOVAL OF EXISTING TERMINAL SYSTEMS IS PAID PER LINEAR FOOT UNDER THE REMOVE METAL BEAM GUARD RAIL ITEM.

SUMMARY OF QUANTITIES

Q-5

STATE OF CALIFORNIA - DEPARTMENT OF TRANSPORTATION
Caltrans® DIVISION OF ENGINEERING

FUNCTIONAL SUPERVISOR: MOHAMMAD U. SADIQ
CALCULATED-DESIGNED BY: JUSTIN UNCK
CHECKED BY: JERRY CAGLE
REVISED BY / DATE REVISED

LAST REVISION 00-00-00 | DATE PLOTTED => 14-MAY-2012 | TIME PLOTTED => 11:21

Dist	COUNTY	ROUTE	POST MILES TOTAL PROJECT	SHEET No.	TOTAL SHEETS
03	Sac	12	0.3/6.1	20	57

REGISTERED CIVIL ENGINEER 5-7-12 DATE

5-14-12
PLANS APPROVAL DATE

REGISTERED PROFESSIONAL ENGINEER JUSTIN A. UNCK No. 65889 Exp. 12-31-13 CIVIL STATE OF CALIFORNIA

THE STATE OF CALIFORNIA OR ITS OFFICERS OR AGENTS SHALL NOT BE RESPONSIBLE FOR THE ACCURACY OR COMPLETENESS OF SCANNED COPIES OF THIS PLAN SHEET.

ROADWAY QUANTITIES SUMMARY

ROAD	LOCATION	APPROXIMATE PM		RUBBERIZED HMA (GAP GRADED)	TACK COAT	HMA (TYPE A)	NOTES
	Lt/Rt	FROM	TO	TON	TON	TON	
Rte 12	Lt/Rt	0.424	0.778	2,258.0	3.508		VICINITY OF ROUTE 160. INCLUDES ALL QUANTITIES PLACED ON NORTH AND SOUTH LEGS OF Rte 160
	Lt/Rt	0.778	3.410	8,284.4	12.870		TWO LANE ROADWAY
	Lt/Rt	3.410	3.59	671.1	1.043		UP TO END OF LOCATION 1, IN THE VICINITY OF JACKSON SLOUGH Rd
	Lt/Rt	3.64	3.846	800.0	1.243		FROM START OF LOCATION 2, IN THE VICINITY OF JACKSON SLOUGH Rd
	Lt/Rt	3.846	5.494	5,185.2	8.056		TWO LANE ROADWAY
	Lt/Rt	5.494	5.67	601.0	0.934		UP TO END OF LOCATION 2, IN THE VICINITY OF TERMINOUS Rd. INCLUDES ALL QUANTITIES PLACED ON TERMINOUS Rd, TWO WAY LEG
	Lt/Rt	5.77	6.064	1,178.9	1.832		FROM START OF LOCATION 3, IN THE VICINITY OF BRANNON ISLAND Rd. INCLUDES ALL QUANTITIES PLACED ON BRANNON ISLAND Rd
	Lt/Rt	2.560	3.360		1.564	503.5	ESTIMATED HMA (A) TO MAINTAIN EXISTING SHOULDER SLOPE. SEE TYPICAL CROSS SECTIONS
	Lt/Rt	3.730	4.800		2.092	884.4	ESTIMATED HMA (A) TO MAINTAIN EXISTING SHOULDER SLOPE. SEE TYPICAL CROSS SECTIONS
PRIVATE ROADS AND DRIVEWAYS ALONG Rte 12	Lt	0.680		5.2	0.008		FIELD ACCESS
	Lt	1.00		5.3	0.008		FIELD ACCESS
	Lt	1.16		5.3	0.008		FIELD ACCESS
	Lt	1.47		22.9	0.036		FIELD ACCESS
	Lt	1.88		4.8	0.007		FIELD ACCESS
	Lt	2.50		26.1	0.041		PRIVATE ROAD AND CALL BOX PULLOUT AREA
	Lt	2.86		4.4	0.007		FIELD ACCESS
	Lt	3.10		4.2	0.006		FIELD ACCESS
	Lt	3.45		6.0	0.009		FIELD ACCESS
	Lt	3.98		4.3	0.007		FIELD ACCESS
	Lt	4.31		5.4	0.008		FIELD ACCESS
	Lt	4.50		4.1	0.006		FIELD ACCESS
	Lt	4.78		4.3	0.007		FIELD ACCESS
	Lt	5.23		12.0	0.019		PRIVATE ROAD AND FIELD ACCESS
	Rt	0.68		36.6	0.057		DRIVEWAY
	Rt	1.00		5.3	0.008		FIELD ACCESS
	Rt	1.16		5.3	0.008		FIELD ACCESS
	Rt	1.47		5.0	0.008		FIELD ACCESS
	Rt	1.88		9.5	0.015		FIELD ACCESS
	Rt	2.50		18.6	0.029		FIELD ACCESS
	Rt	2.86		5.2	0.008		FIELD ACCESS
	Rt	3.10		3.1	0.005		FIELD ACCESS
	Rt	3.45		9.6	0.015		DRIVEWAY
	Rt	4.50		5.5	0.009		FIELD ACCESS
	Rt	4.78		3.6	0.006		FIELD ACCESS
	Rt	5.23		17.7	0.028		PRIVATE ROAD AND FIELD ACCESS
					6.004	2,758.0	FROM PROFILE CORRECTIONS
					0.001	1.3	FROM CALL BOXES AND RAMPS QUANTITIES
						45.7	FROM HMA DIKE QUANTITIES
					0.654	458.2	FROM FULL DEPTH DIGOUTS
				140.7			FROM SAFETY EDGE
						2.9	FROM AC OVERSIDE DRAIN
			TOTAL	19,358.6	40.172	4,654.0	

SUMMARY OF QUANTITIES

Q-6

STATE OF CALIFORNIA - DEPARTMENT OF TRANSPORTATION
Caltrans DIVISION OF ENGINEERING

FUNCTIONAL SUPERVISOR: MOHAMMAD U. SADIQ
CALCULATED-DESIGNED BY: JUSTIN UNCK
CHECKED BY: JERRY CAGLE
REVISED BY
DATE REVISED

LAST REVISION 00-00-00 DATE PLOTTED => 14-MAY-2012 TIME PLOTTED => 11:21

Dist	COUNTY	ROUTE	POST MILES TOTAL PROJECT	SHEET No.	TOTAL SHEETS
03	Sac	12	0.3/6.1	21	57

REGISTERED CIVIL ENGINEER 5-7-12 DATE

5-14-12
PLANS APPROVAL DATE

REGISTERED PROFESSIONAL ENGINEER JUSTIN A. UNCK No. 65889 Exp. 12-31-13 CIVIL STATE OF CALIFORNIA

THE STATE OF CALIFORNIA OR ITS OFFICERS OR AGENTS SHALL NOT BE RESPONSIBLE FOR THE ACCURACY OR COMPLETENESS OF SCANNED COPIES OF THIS PLAN SHEET.

REPLACE AC SURFACING

ROAD	LOCATION	APPROXIMATE PM		DIGOUT DIMENSIONS		REPLACE AC SURFACING (0.25' DEPTH)	NOTES
				LENGTH	WIDTH		
	L+/R+	FROM	TO	FT	FT	CY	
Rte 12 LANES	L+/R+	0.475	0.532	300	48	133.3	FOUR 12' THROUGH LANES (L+ TURN LANE NOT INCLUDED)
	L+/R+	0.532	0.759	1,200	Var	657.6	SEE CONSTRUCTION DETAILS FOR REPLACEMENT AREA
	L+/R+	0.759	1.000	1,274	24	274.2	TWO 12' LANES
	L+/R+	1.161	1.469	1,625	24	355.5	TWO 12' LANES
	R+	2.675	3.257	3,070	12	328.3	EB 12' LANE
	L+/R+	3.64	5.500	9,824	24	2,183.1	TWO 12' THROUGH LANES
	L+/R+	5.607	5.67	350	24	77.8	TWO 12' THROUGH LANES
	L+/R+	5.77	5.816	250	24	55.6	TWO 12' THROUGH LANES
Rte 12 SHOULDERS	R+	3.64	4.200	2,960	8	220	
	R+	4.665	4.735	370	8	27.4	
	R+	5.548	5.599	269	8	19.9	
					TOTAL	4,332.7	

NOTES: 1. EXACT LOCATIONS OF REPLACE AC SURFACING TO BE DETERMINED BY THE ENGINEER.
2. DEDUCTIONS FOR FULL DEPTH DIGOUTS WITHIN THE LIMITS OF REPLACE AC SURFACING ARE ACCOUNTED FOR IN THE QUANTITIES SHOWN.

SAFETY EDGE

ROAD	LOCATION	APPROXIMATE PM		RHMA (G)	(N) SAFETY EDGE
		FROM	TO	TON	TON
Rte 12	L+	0.58	3.59	69.5	69.5
		3.64	5.67		
		5.77	5.96		
	R+	0.58	3.59	71.2	71.2
		3.64	5.67		
		5.77	5.56		
		SUBTOTAL		140.7	
		TOTAL		*	140.7

(N) NOT A SEPARATE PAY ITEM, FOR INFORMATION ONLY
* SEE ROADWAY QUANTITIES FOR TOTAL

STORMWATER

LOCATION	TEMPORARY FIBER ROLL	TEMPORARY GRAVEL BAG BERM
	LF	LF
VARIES	1,065	33
TOTAL	1,065	33

SUMMARY OF QUANTITIES

Q-7

STATE OF CALIFORNIA - DEPARTMENT OF TRANSPORTATION
Caltrans DIVISION OF ENGINEERING

FUNCTIONAL SUPERVISOR: MOHAMMAD U. SADIQ
CALCULATED-DESIGNED BY: JUSTIN UNCK
CHECKED BY: JERRY CAGLE
REVISED BY / DATE REVISED

LAST REVISION 00-00-00 | DATE PLOTTED => 14-MAY-2012 | TIME PLOTTED => 11:21

Dist	COUNTY	ROUTE	POST MILES TOTAL PROJECT	SHEET No.	TOTAL SHEETS
03	Sac	12	0.3/6.1	22	57

REGISTERED CIVIL ENGINEER 5-7-12 DATE

5-14-12
PLANS APPROVAL DATE

REGISTERED PROFESSIONAL ENGINEER JUSTIN A. UNCK No. 65889 Exp. 12-31-13 CIVIL STATE OF CALIFORNIA

THE STATE OF CALIFORNIA OR ITS OFFICERS OR AGENTS SHALL NOT BE RESPONSIBLE FOR THE ACCURACY OR COMPLETENESS OF SCANNED COPIES OF THIS PLAN SHEET.

PAVEMENT DELINEATION

ROAD	TYPE OF DELINEATION	LOCATION	APPROXIMATE PM		DISTANCE	DETAIL No.	4" THERMOPLASTIC TRAFFIC STRIPE							8" THERMOPLASTIC TRAFFIC STRIPE	PAVEMENT MARKER (RETROREFLECTIVE) TYPE			NOTES
							BROKEN					SOLID						
							12-3	17-7		36-12								
							WHITE	WHITE	YELLOW	WHITE	YELLOW	WHITE	YELLOW	WHITE	D	G	H	
		Lt/Rt/Ctr	FROM	TO	FT		LF	LF	LF	LF	LF	LF	LF	LF	EA	EA	EA	
Rte 12	CENTERLINE	Ctr	0.424	0.562	750	22							1,500		64			
		Ctr	0.585	0.762	935	22							1,870		78			
		Ctr	0.762	1.246	2,556	6					2,556				54			
		Ctr	1.246	1.372	665	19					665		665		14		28	
		Ctr	1.372	1.483	586	22							1,172		50			
		Ctr	1.483	1.555	380	19					380		380		8		16	
		Ctr	1.555	3.297	9,198	6					9,198				192			
		Ctr	3.297	3.432	713	19					713		713		15		30	
		Ctr	3.432	3.59	834	22							1,668		70			
		Ctr	3.64	3.821	956	22							1,912		80			
		Ctr	3.821	3.915	496	19					496		496		11		21	
		Ctr	3.915	5.545	8,606	6					8,606				180			
		Ctr	5.545	5.612	354	19					354		354		8		15	
		Ctr	5.624	5.67	243	22							486		22			
		Ctr	5.77	5.83	317	22							634		28			
		Ctr	5.841	6.064	1,177	22							2,354		100			
	EDGELINE	Lt	0.424	0.562	750	27B						750						
		Lt	0.585	3.59	15,866	27B						15,866						
		Lt	3.64	5.601	10,354	27B						10,354						
		Lt	5.601	5.623	116	27C	116											CROSSES TERMINOUS ROAD AT TWO WAY LEG
		Lt	5.623	5.67	248	27B						248						
		Lt	5.77	5.83	317	27B						317						
		Lt	5.842	6.064	1172	27B						1,172						
		Rt	0.42	0.562	750	27B						750						
		Rt	0.585	3.59	15,866	27B						15,866						
		Rt	3.643	6.064	12,783	27B						12,783						
	CHANNELIZING	Lt	0.586	0.666	422	38								422		18		Lt TURN POCKET
		Lt	3.64	3.728	465	38								465		20		Lt TURN POCKET
		Lt	5.842	5.929	459	38								459		20		Lt TURN POCKET
		Rt	0.495	0.562	354	38								354		15		Lt TURN POCKET
		Rt	3.527	3.59	333	38								333		14		Lt TURN POCKET
		Rt	5.784	5.943	840	38								840		36		Rt TURN POCKET
		Rt	5.835		*	38								34		4		DELINEATES ISLAND IN INTERSECTION
						SHEET TOTAL	116	0	0	0	22,968	58,106	14,204	2,907	974	127	110	

* NOT APPLICABLE

Ctr = CENTER

SUMMARY OF QUANTITIES

Q-8

STATE OF CALIFORNIA - DEPARTMENT OF TRANSPORTATION
Caltrans® DIVISION OF ENGINEERING

FUNCTIONAL SUPERVISOR: MOHAMMAD U. SADIQ
CALCULATED-DESIGNED BY: JUSTIN UNCK
CHECKED BY: JERRY CAGLE
REVISED BY
DATE REVISED

LAST REVISION 00-00-00 | DATE PLOTTED => 14-MAY-2012 | TIME PLOTTED => 11:21

Dist	COUNTY	ROUTE	POST MILES TOTAL PROJECT	SHEET No.	TOTAL SHEETS
03	Sac	12	0.3/6.1	23	57

REGISTERED CIVIL ENGINEER 5-7-12 DATE

5-14-12
PLANS APPROVAL DATE

REGISTERED PROFESSIONAL ENGINEER JUSTIN A. UNCK No. 65889 Exp. 12-31-13 CIVIL STATE OF CALIFORNIA

THE STATE OF CALIFORNIA OR ITS OFFICERS OR AGENTS SHALL NOT BE RESPONSIBLE FOR THE ACCURACY OR COMPLETENESS OF SCANNED COPIES OF THIS PLAN SHEET.

PAVEMENT DELINEATION (CONTINUED)

ROAD	TYPE OF DELINEATION	LOCATION	APPROXIMATE PM		DISTANCE	DETAIL No.	4" THERMOPLASTIC TRAFFIC STRIPE							8" THERMOPLASTIC TRAFFIC STRIPE	PAVEMENT MARKER (RETROREFLECTIVE) TYPE			NOTES
							BROKEN					SOLID						
							12-3	17-7		36-12								
							WHITE	WHITE	YELLOW	WHITE	YELLOW	WHITE	YELLOW	WHITE	D	G	H	
		L†/R†/C†r	FROM	TO	FT		LF	LF	LF	LF	LF	LF	LF	LF	EA	EA	EA	
Rte 12	LANELINE	L†	0.494	0.561	354	9		354								8		
		L†	0.585	0.655	370	12				370						8		
		R†	0.446	0.561	607	12				607						13		
		R†	0.585	0.665	422	9		422								9		
Rte 160	CENTERLINE				95	22							190		8			NORTH LEG OF Rte 160 AT Rte 12
	EDGELINE				255	27B						255						NORTH LEG OF Rte 160 AT Rte 12
	CHANNELIZING				95	38								95		4		NORTH LEG OF Rte 160 AT Rte 12
	CENTERLINE				97	22							194		10			SOUTH LEG OF Rte 160 AT Rte 12
	EDGELINE				240	27B						240						SOUTH LEG OF Rte 160 AT Rte 12
	CHANNELIZING				98	38								98		5		SOUTH LEG OF Rte 160 AT Rte 12
SIDE ROAD AT PM 5.645	CENTERLINE				96	22							192		10			TWO WAY LEG OF TERMINOUS Rd
	EDGELINE				99	27B						99						TWO WAY LEG OF TERMINOUS Rd
	CHANNELIZING				72	38								72		4		TWO WAY LEG OF TERMINOUS Rd
SIDE ROAD AT PM 5.802	CENTERLINE				35	22							70		4			BRANNON ISLAND Rd
	EDGELINE				31	27B						31						BRANNON ISLAND Rd
					SHEET TOTAL		0	776	0	977	0	625	646	265	32	51	0	
					FROM Q-8		116	0	0	0	22,968	58,106	14,204	2,907	974	127	110	
					SUBTOTAL		116	776	0	977	22,968	58,731	14,850	3,172	1,006	178	110	
					TOTAL		116	776		23,945		73,581		3,172	1,294			

NOTES:
Ctr = CENTER

SUMMARY OF QUANTITIES

Q-9

STATE OF CALIFORNIA - DEPARTMENT OF TRANSPORTATION
Caltrans® DIVISION OF ENGINEERING

FUNCTIONAL SUPERVISOR: MOHAMMAD U. SADIQ
CALCULATED-DESIGNED BY: JUSTIN UNCK
CHECKED BY: JERRY CAGLE
REVISED BY
DATE REVISED

LAST REVISION 00-00-00 DATE PLOTTED => 14-MAY-2012 TIME PLOTTED => 11:21

Dist	COUNTY	ROUTE	POST MILES TOTAL PROJECT	SHEET No.	TOTAL SHEETS
03	Sac	12	0.3/6.1	24	57

REGISTERED CIVIL ENGINEER 5-7-12 DATE

5-14-12
PLANS APPROVAL DATE

REGISTERED PROFESSIONAL ENGINEER JUSTIN A. UNCK No. 65889 Exp. 12-31-13 CIVIL STATE OF CALIFORNIA

THE STATE OF CALIFORNIA OR ITS OFFICERS OR AGENTS SHALL NOT BE RESPONSIBLE FOR THE ACCURACY OR COMPLETENESS OF SCANNED COPIES OF THIS PLAN SHEET.

PAVEMENT MARKINGS

ROAD	TYPE OF MARKING	LOCATION L+/R+	APPROXIMATE PM	(N) No. OF MARKINGS	THERMOPLASTIC PAVEMENT MARKING "SIGNAL" SQFT	"AHEAD" SQFT	"STOP" SQFT	"YIELD" SQFT	TYPE VI ARROW SQFT	TYPE III(L) ARROW SQFT	LIMIT LINE SQFT	NOTES
Rte 12	"SIGNAL"	L+	0.739	1	32							
	"AHEAD"	L+	0.727	1		31						
	TYPE VI ARROW	L+	0.493, 0.514, 0.535	3					126			
		R+	0.611, 0.632, 0.653	3					126			
	TYPE III(L) ARROW	L+	0.580, 0.618, 0.649, 3.650, 3.688, 3.730, 5.856, 5.890, 5.922	9						378		
		R+	0.495, 0.549, 3.537, 3.579, 5.789, 5.822	6						252		
	LIMIT LINE	L+	0.577	1							57	
		R+	0.554	1							55	
Rte 160	TYPE III(L) ARROW			1						42		NORTH LEG OF RTE 160 AT RTE 12
	LIMIT LINE			1							47	NORTH LEG OF RTE 160 AT RTE 12
	TYPE III(L) ARROW			1						42		SOUTH LEG OF RTE 160 AT RTE 12
	LIMIT LINE			1							49	SOUTH LEG OF RTE 160 AT RTE 12
SIDE ROAD AT PM 5.65	"STOP"			1			22					TWO WAY LEG OF TERMINOUS ROAD
	"YIELD"			1				24				TWO WAY LEG OF TERMINOUS ROAD
	LIMIT LINE			1							37	TWO WAY LEG OF TERMINOUS ROAD
SIDE ROAD. AT PM 5.80	"STOP"			1			22					BRANNON ISLAND ROAD
	LIMIT LINE			1							40	BRANNON ISLAND ROAD
				SUBTOTAL	32	31	44	24	252	714	285	
				TOTAL	1,382							

(N) - NOT A SEPARATE PAY ITEM, FOR INFORMATION ONLY

SUMMARY OF QUANTITIES

Q-10

STATE OF CALIFORNIA - DEPARTMENT OF TRANSPORTATION
Caltrans DIVISION OF ENGINEERING

FUNCTIONAL SUPERVISOR: MOHAMMAD U. SADIQ
CALCULATED-DESIGNED BY: JUSTIN UNCK
CHECKED BY: JERRY CAGLE
REVISED BY / DATE REVISED

LAST REVISION 00-00-00 | DATE PLOTTED => 14-MAY-2012 | TIME PLOTTED => 11:21

Dist	COUNTY	ROUTE	POST MILES TOTAL PROJECT	SHEET No.	TOTAL SHEETS
03	Sac	12	0.3/6.1	25	57

H. Golban 5-9-12
REGISTERED ELECTRICAL ENGINEER DATE

5-14-12
PLANS APPROVAL DATE

REGISTERED PROFESSIONAL ENGINEER HABIB GOLBAN No. 17928 Exp. 9-30-12 ELECTRICAL STATE OF CALIFORNIA

THE STATE OF CALIFORNIA OR ITS OFFICERS OR AGENTS SHALL NOT BE RESPONSIBLE FOR THE ACCURACY OR COMPLETENESS OF SCANNED COPIES OF THIS PLAN SHEET.

NOTE:

FOR ACCURATE RIGHT OF WAY DATA, CONTACT RIGHT OF WAY ENGINEERING AT THE DISTRICT OFFICE.

PROJECT NOTES (THIS SHEET ONLY)

1. Exist TYPE III-AF SERVICE EQUIPMENT ENCLOSURE CTID No.04240120003640
2. Exist TYPE 332 CONTROLLER CABINET.
3. Exist TYPE 332 TMS CABINET.
4. 1½"C, 2#10, 4 dlc, RC 2 dlc, ADD 2 DLC (TMS)
5. 1½"C, 2#10, 5 dlc, RC 3 dlc, ADD 2 DLC (TMS)
6. 1½"C, 2#10, 8 dlc, RC 3 dlc, ADD 2 DLC (TMS)

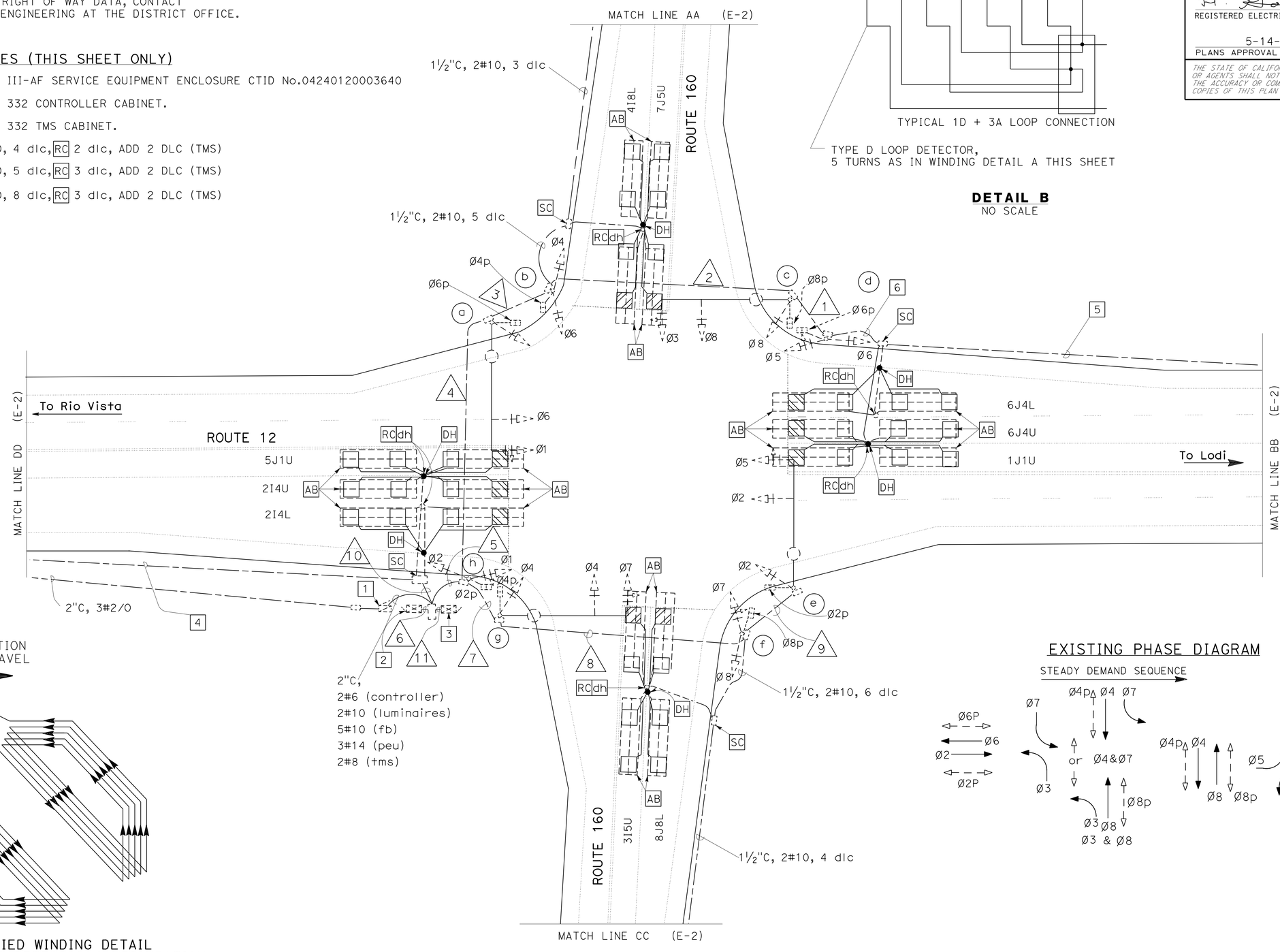

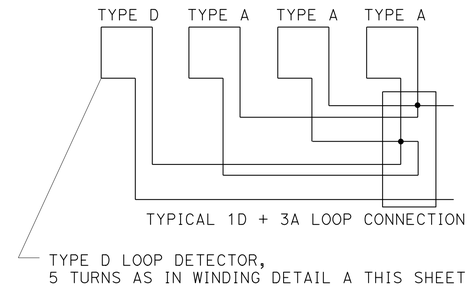

DETAIL B
NO SCALE

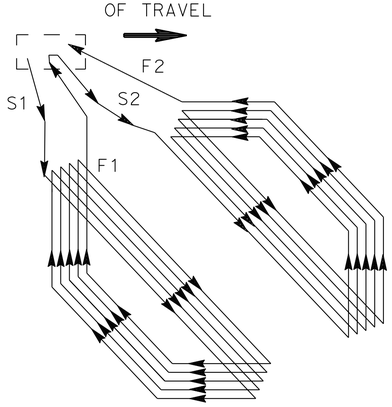

MODIFIED WINDING DETAIL
TYPE D LOOP DETECTOR CONFIGURATION
SEE STANDARD PLAN ES-5B FOR NOTES AND DETAILS

DETAIL A
NO SCALE

EXISTING PHASE DIAGRAM

STEADY DEMAND SEQUENCE

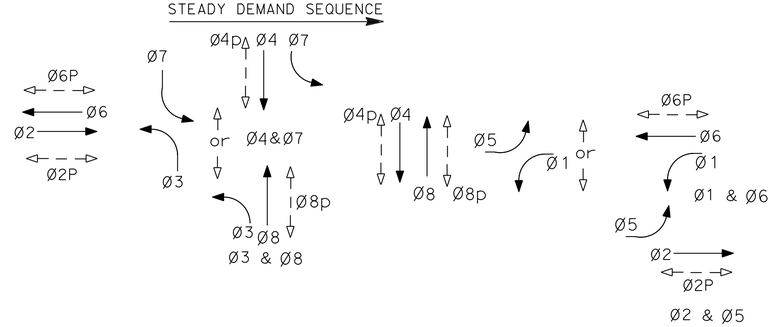

APPROVED FOR ELECTRICAL WORK ONLY

MODIFY SIGNAL AND LIGHTING

SCALE: 1" = 20'

E-1

STATE OF CALIFORNIA - DEPARTMENT OF TRANSPORTATION
Caltrans ELECTRICAL DESIGN

FUNCTIONAL SUPERVISOR: NELSON LEE
CALCULATED-DESIGNED BY: HABIB GOLBAN
CHECKED BY: OANH D NGUYEN
REVISED BY / DATE REVISED

LAST REVISION 04-18-12
DATE PLOTTED => 14-MAY-2012
TIME PLOTTED => 11:21

Dist	COUNTY	ROUTE	POST MILES TOTAL PROJECT	SHEET No.	TOTAL SHEETS
03	Sac	12	0.3/6.1	26	57

H. Golban 5-9-12
REGISTERED ELECTRICAL ENGINEER DATE

5-14-12
PLANS APPROVAL DATE

REGISTERED PROFESSIONAL ENGINEER HABIB GOLBAN No. 17928 Exp. 9-30-12 ELECTRICAL STATE OF CALIFORNIA

THE STATE OF CALIFORNIA OR ITS OFFICERS OR AGENTS SHALL NOT BE RESPONSIBLE FOR THE ACCURACY OR COMPLETENESS OF SCANNED COPIES OF THIS PLAN SHEET.

NOTE:

FOR ACCURATE RIGHT OF WAY DATA, CONTACT RIGHT OF WAY ENGINEERING AT THE DISTRICT OFFICE.

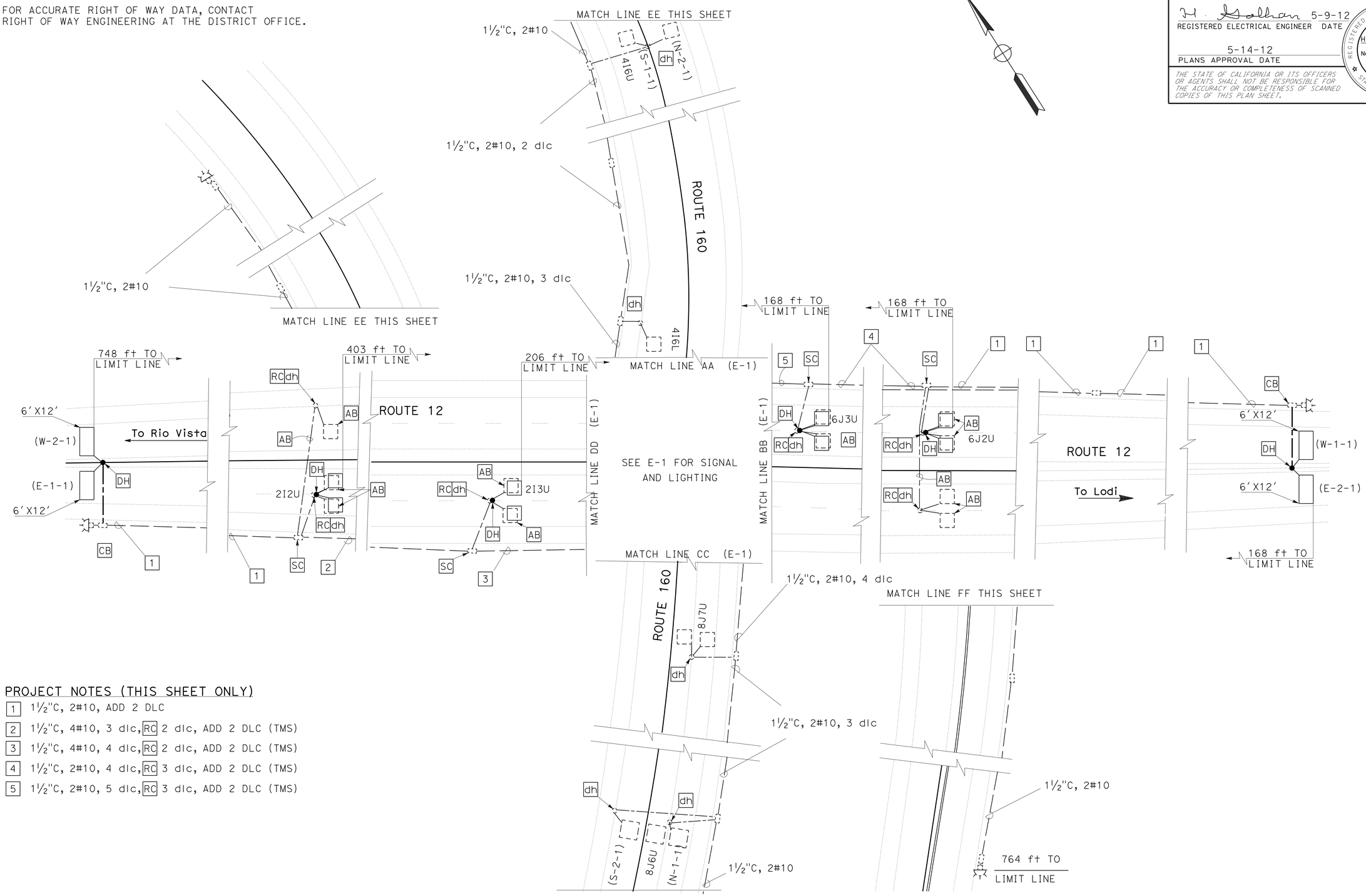

PROJECT NOTES (THIS SHEET ONLY)

1. 1½"C, 2#10, ADD 2 DLC
2. 1½"C, 4#10, 3 dlc, RC 2 dlc, ADD 2 DLC (TMS)
3. 1½"C, 4#10, 4 dlc, RC 2 dlc, ADD 2 DLC (TMS)
4. 1½"C, 2#10, 4 dlc, RC 3 dlc, ADD 2 DLC (TMS)
5. 1½"C, 2#10, 5 dlc, RC 3 dlc, ADD 2 DLC (TMS)

APPROVED FOR ELECTRICAL WORK ONLY

MODIFY SIGNAL AND LIGHTING

SCALE: 1" = 20'

E-2

STATE OF CALIFORNIA - DEPARTMENT OF TRANSPORTATION
Caltrans® ELECTRICAL DESIGN

FUNCTIONAL SUPERVISOR: NELSON LEE
CALCULATED-DESIGNED BY: OANH D NGUYEN
CHECKED BY: HABIB GOLBAN
REVISED BY
DATE REVISED

LAST REVISION 04-18-12
DATE PLOTTED => 14-MAY-2012
TIME PLOTTED => 11:21

Dist	COUNTY	ROUTE	POST MILES TOTAL PROJECT	SHEET No.	TOTAL SHEETS
03	Sac	12	0.3/6.1	27	57

H. Golban 5-9-12
REGISTERED ELECTRICAL ENGINEER DATE

5-14-12
PLANS APPROVAL DATE

REGISTERED PROFESSIONAL ENGINEER HABIB GOLBAN No. 17928 Exp. 9-30-12 ELECTRICAL STATE OF CALIFORNIA

THE STATE OF CALIFORNIA OR ITS OFFICERS OR AGENTS SHALL NOT BE RESPONSIBLE FOR THE ACCURACY OR COMPLETENESS OF SCANNED COPIES OF THIS PLAN SHEET.

MODIFY CONDUCTOR AND CONDUIT SCHEDULE

AWG OR CABLE	CONDUCTOR SIZE	3"C	3"C 2"CMT	3"C	3"C	2 3"C	3"C	3"C	3"C	3"C	2"C	2 3"C
	CONDUCTOR RUN	* 1	* 2	* 3	* 4	* 5	** 6	7	8	9	*** 10	**** 11
No. 14	Ø1				3	3	3					
	Ø2					3	3	3	3	3		
	Ø3		3	3	3	3	3					
	Ø4			3	3	6	6	3				
	Ø5	3	3	3	3	6	6	3	3	3		
	Ø6	3	3	3	3	3	3					
	Ø7					3	3	3	3			
	Ø8		3	3	3	6	6	3	3			
	PEDESTRIANS											
	Ø2P					2	2	2	2	2		
	Ø4P			2	2	4	4	2				
	Ø6P	2	2	2	2	2	2					
	Ø8P		2	2	2	4	4	2	2			
	PED PUSH BUTTONS											
	Ø2PPB					1	1	1	1			
	Ø4PPB				1	1	1					
	Ø6PPB		1	1	1	1	1					
	Ø8PPB	1	1	1	1	2	2	1	1	1		
	PEC					3		3				
	PPB COMMON	1	1	1	1	2	2	1	1	1		
	SPARES	3	3	3	3	6	6	3	3	3		
	TOTAL No. 14	13	22	27	31	61	58	30	22	13		
LOOP DETECTOR LEAD IN CABLE	DETECTORS											
	Ø1	1	1	1	1	1	1					
	Ø2						4					
	Ø3					1	1	1	1		4	
	Ø4			2	2	2	2					
	Ø5						2					
	Ø6	4	4	4	4	4	4				2	
	Ø7			2	2	2	2					
	Ø8					2	2	2	2			
	SUB TOTAL DLC	5	5	8	8	12	16	3	3		6	
No. 10	LUMINAIRE (240V)		2	2	2	2		2	2	2		
	SIGNAL COMMON	1	1	1	1	2	2	1	1	1		
	ADVANCE FB	2	2	3	3	4						
	ADVANCE FB					2		2	2		2	
	PRE-EMPTION						2				2	
	TOTAL NO. 10	3	5	6	6	10	4	5	5	3	4	
No. 6	SERVICE						2					
LOOP DETECTOR LEAD IN CABLE	(8J6U) N-1-1/8J7U					1/1		1/1	1/1			1/1
	N-2-1			1	1	1						1
	(4I6U) S-1-1/4I6L			1/1	1/1	1/1						1/1
	S-2-1					1		1	1			1
	(2I4U) E-1-1											1
	(2I4L) E-1-2/2I3U											1/1
	E-2-1	1	1	1	1	1						1
	E-2-2	1	1	1	1	1						1
	(6J2U) W-1-2/6J3U	1/1	1/1	1/1	1/1	1/1						1/1
	(6J2L) W-1-1											1
	W-2-1										1	1
Exist (adv)						1		1	1			1

* RC 3 dlc, ADD 2 DLC (TMS CABINET)
** RC 2 dlc
*** RC 2 dlc, ADD 2 DLC (TMS CABINET)
**** RC 3 dlc, ADD 4 DLC (TMS CABINET)

EXIST POLE AND EQUIPMENT SCHEDULE

NO.	STANDARD Type	SMA	LMA	"A"	"B"	VEH SIG MTG Mast Arm	Pole	PED SIGNAL Ø	MTG	PPB Ø	ARROW	HPS LUMINAIRE	SPECIAL REQUIREMENTS
a	29-5-80	55 ft	15 ft	1.5 WEST OF B.C.	1.5 FROM EP	mat mat	sv-1-t	6	sp-1-t	4	←	200W 240V	
b	1-A			3 ±			tv-2-t	4	sp-1-t	6	→		
c	29-5-80	50 ft	15 ft	3 ±		mat mat	sv-1-t	8	sp-1-t	6	←	200W 240V	
d	1-A			1.5±			tv-2-t	6	sp-1-t	8	→		
e	29-5-80		15 ft	3 WEST OF B.C.		mat mat	sv-1-t	2	sp-1-t	8	←	200W 240V	
f	1-A	55 ft		3.7±			tv-2-t	8	sp-1-t	2	→		
g	29-5-80		15 ft	3.7±		mat mat	sv-1-t	4	sp-1-t	2	←		
h	1-A	50 ft		1.5±	1.5 FROM EP		tv-2-t	2	sp-1-t	4	→	200W 240V	

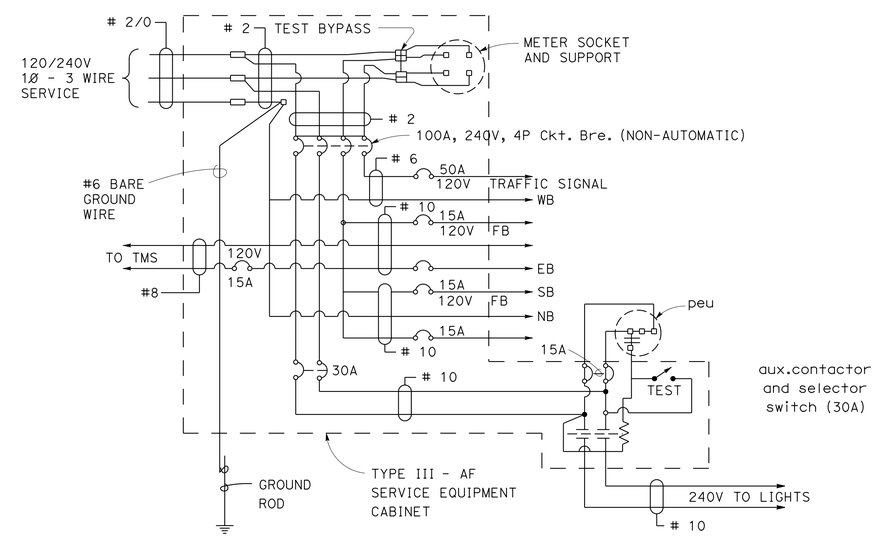

Existing service wiring diagram for 120/240V service

Serving Utility: PG&E

MODIFY SIGNAL AND LIGHTING

APPROVED FOR ELECTRICAL WORK ONLY

E-3

STATE OF CALIFORNIA - DEPARTMENT OF TRANSPORTATION
Caltrans® ELECTRICAL DESIGN
FUNCTIONAL SUPERVISOR: NELSON LEE
CALCULATED-DESIGNED BY: OANH D NGUYEN
CHECKED BY: HABIB GOLBAN
REVISED BY / DATE REVISED

LAST REVISION 04-18-12
DATE PLOTTED => 14-MAY-2012
TIME PLOTTED => 11:21

DIST	COUNTY	ROUTE	POST MILES TOTAL PROJECT	SHEET NO.	TOTAL SHEETS
03	Sac	12	0.3/6.1	28	57

REGISTERED CIVIL ENGINEER

April 20, 2012
PLANS APPROVAL DATE

REGISTERED PROFESSIONAL ENGINEER
Roberta L. McLaughlin
No. C40375
Exp. 3-31-13
CIVIL
STATE OF CALIFORNIA

The State of California or its officers or agents shall not be responsible for the accuracy or completeness of electronic copies of this plan sheet.

To accompany plans dated 5-14-12

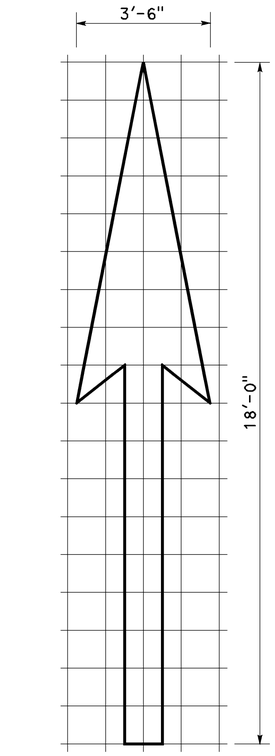

A=25 sq ft

TYPE I 18'-0" ARROW

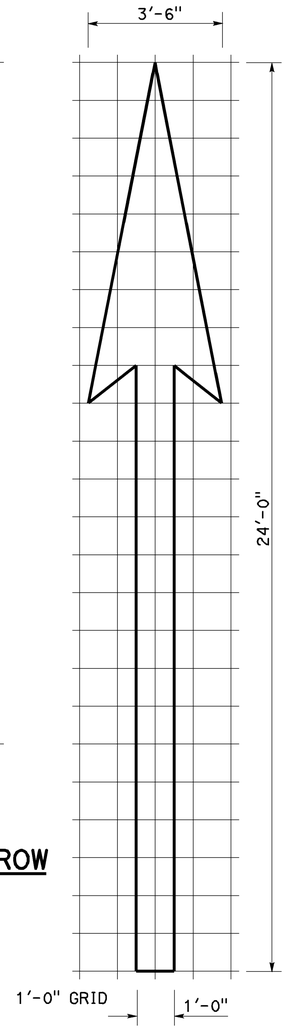

A=31 sq ft

TYPE I 24'-0" ARROW

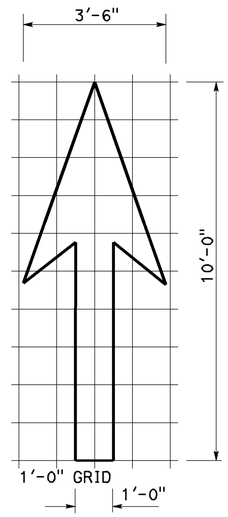

A=14 sq ft

TYPE I 10'-0" ARROW

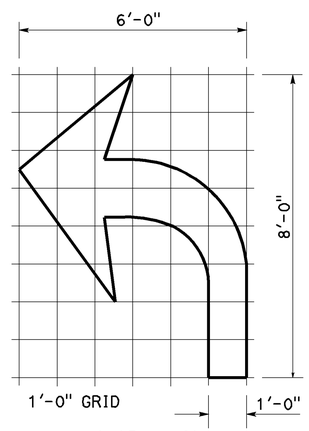

A=15 sq ft

TYPE IV (L) ARROW

(FOR TYPE IV (R) ARROW, USE MIRROR IMAGE)

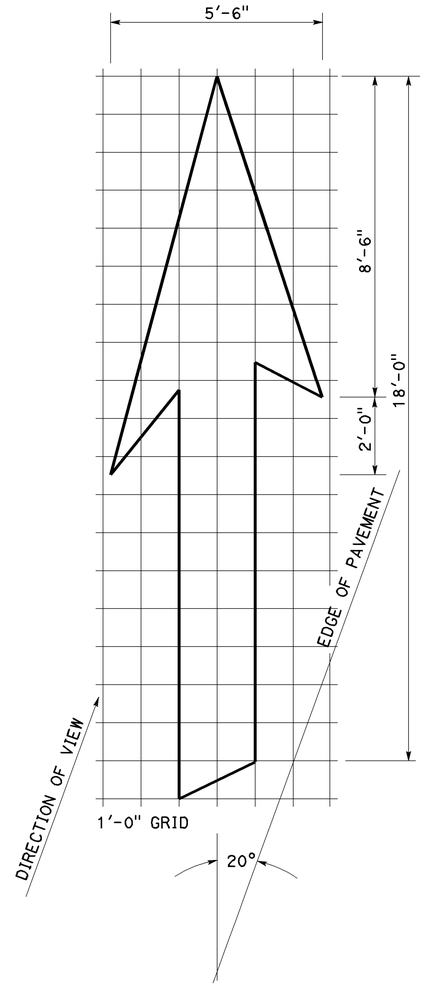

A=42 sq ft

TYPE VI ARROW

RIGHT LANE DROP ARROW
(FOR LEFT LANE, USE MIRROR IMAGE)

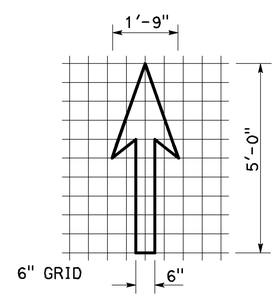

A=3.5 sq ft

BIKE LANE ARROW

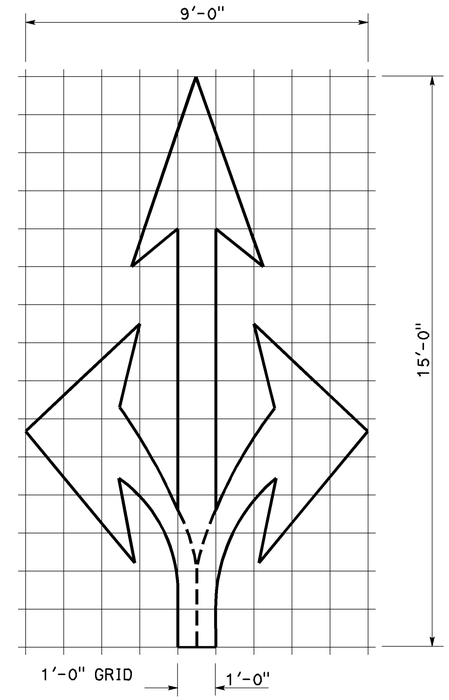

A=36 sq ft

TYPE VIII ARROW

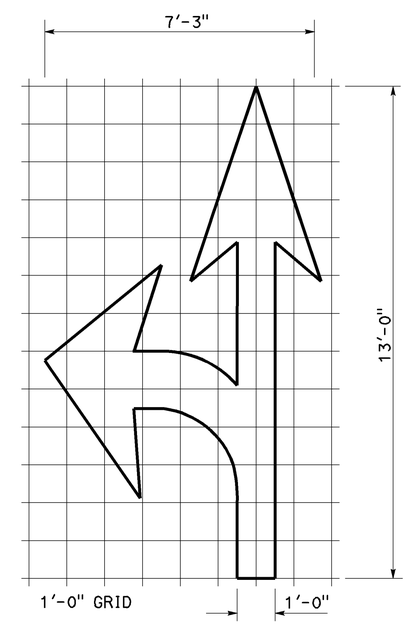

A=27 sq ft

TYPE VII (L) ARROW

(FOR TYPE VII (R) ARROW, USE MIRROR IMAGE)

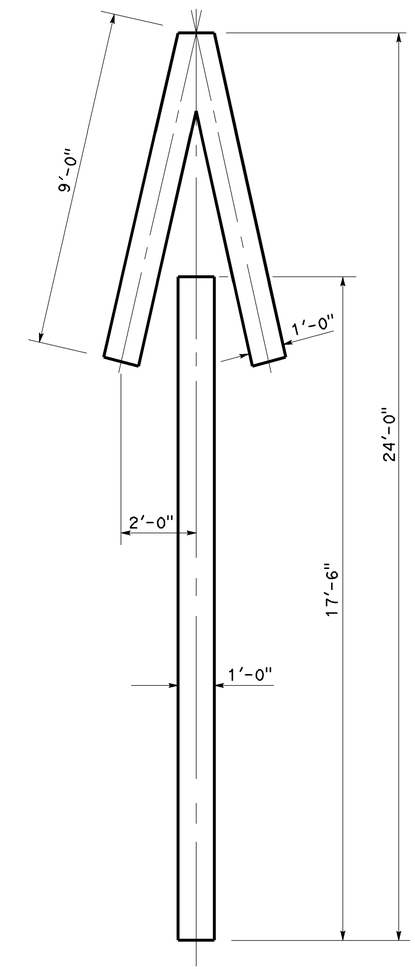

A=33 sq ft

TYPE V ARROW

NOTE:
MINOR VARIATIONS IN DIMENSIONS MAY BE ACCEPTED BY THE ENGINEER.

STATE OF CALIFORNIA
DEPARTMENT OF TRANSPORTATION

PAVEMENT MARKINGS ARROWS

NO SCALE

RSP A24A DATED APRIL 20, 2012 SUPERSEDES STANDARD PLAN A24A DATED MAY 1, 2006 - PAGE 9 OF THE STANDARD PLANS BOOK DATED MAY 2006.

REVISED STANDARD PLAN RSP A24A

2006 REVISED STANDARD PLAN RSP A24A

3-14-12

Dist	COUNTY	ROUTE	POST MILES TOTAL PROJECT	SHEET No.	TOTAL SHEETS
03	Sac	12	0.3/6.1	29	57

Randell D. Hiatt
REGISTERED CIVIL ENGINEER

May 20, 2011
PLANS APPROVAL DATE

REGISTERED PROFESSIONAL ENGINEER
Randell D. Hiatt
No. C50200
Exp. 6-30-11
CIVIL
STATE OF CALIFORNIA

The State of California or its officers or agents shall not be responsible for the accuracy or completeness of electronic copies of this plan sheet.

To accompany plans dated 5-14-12

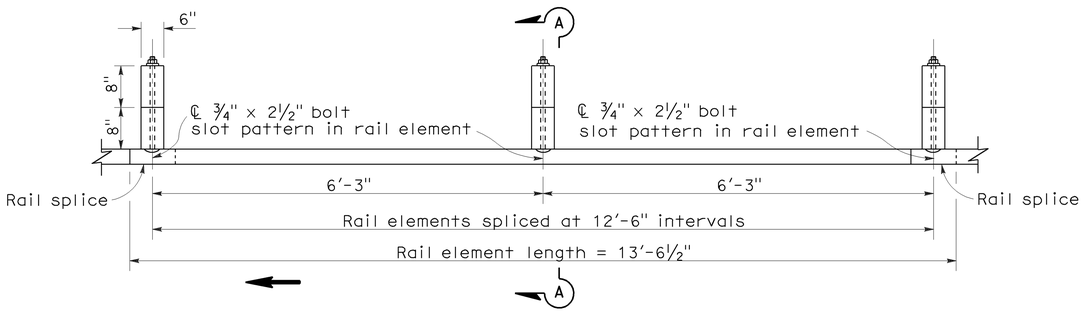

PLAN

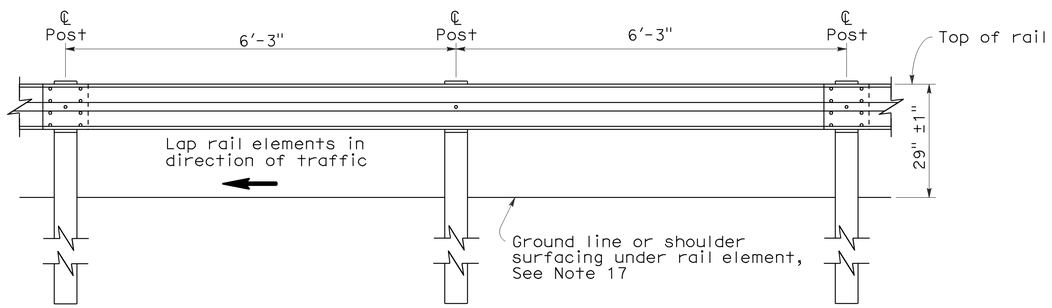

ELEVATION

METAL BEAM GUARD RAILING WITH WOOD POST AND BLOCKS

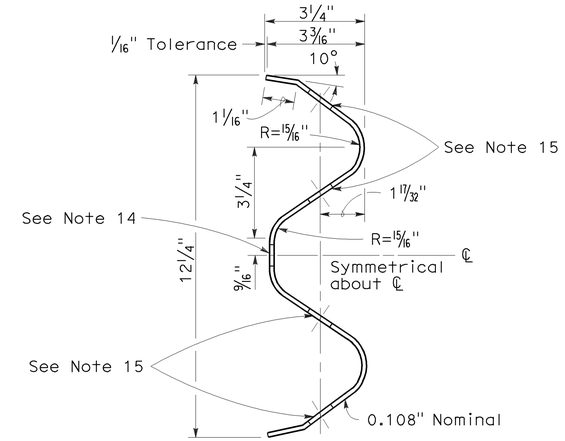

SECTION THRU
RAIL ELEMENT

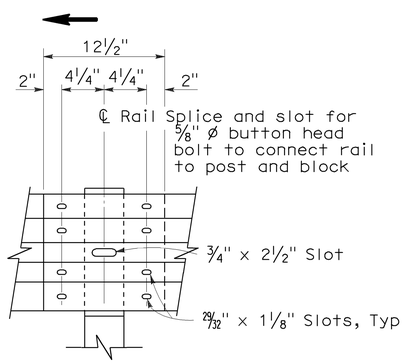

ELEVATION

RAIL ELEMENT SPLICE DETAIL

a) Connect the over lapped end of the rail elements with ⅝" ø x 1⅜" button head oval shoulder splice bolts inserted into the 29⁄32" x 1⅛" slots and bolted together with ⅝" ø recessed hex nuts. Recess of hex nut points toward rail element. A total of 8 bolts and nuts are to be used at each rail splice connection.

b) The ends of the rail elements are to be overlapped in the direction of traffic (see details).

c) Where end cap is to be attached to the end of a rail element, a total of 4 of the above described splice bolts and nuts are to be used.

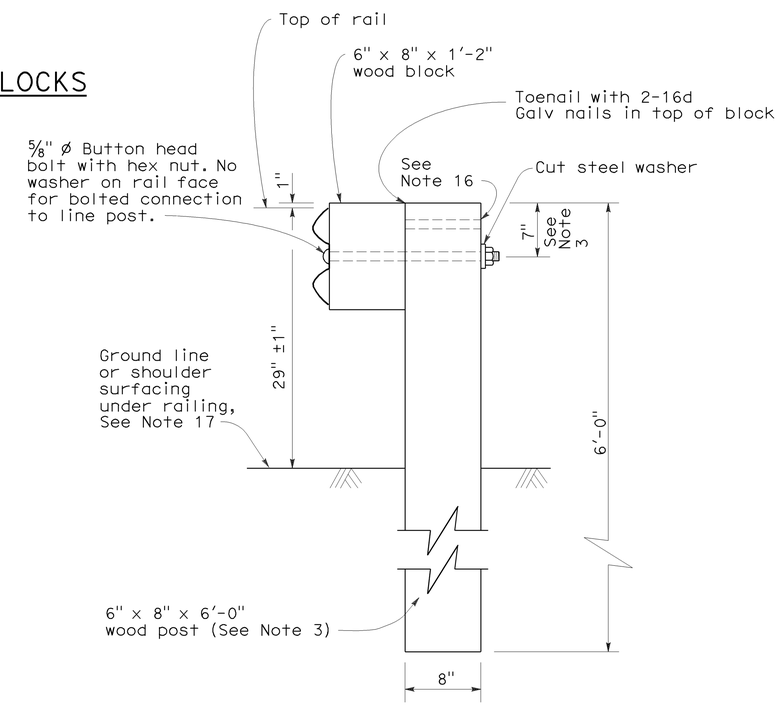

SECTION A-A
TYPICAL WOOD LINE
POST INSTALLATION
See Note 4

NOTES:

1. For details of steel post installations, see Standard Plan A77A2.
2. For details of standard hardware used to construct guard railing, see Standard Plan A77B1.
3. For details of wood posts and wood blocks used to construct guard railing, see Standard Plan A77C1.
4. For additional installation details, see Standard Plan A77C3.
5. Guard railing post spacing to be 6'-3" center to center, except as otherwise noted.
6. For guard railing typical layouts, see the A77E, A77F and A77G Series of Standard Plans.
7. For terminal system end treatment details, see the A77L Series of Standard Plans. To connect railing to terminal system end treatment, transition the top of railing height at a ratio of 120:1 to terminal system end treatment height plus one 12'-6" standard railing section at the transitioned height for a horizontal connection to the end treatment.
8. For guard railing end anchor details, see Standard Plans A77H1 and A77I2.
9. For details of guard railing transition to bridge railing, see Standard Plan A77J4.
10. For additional details of guard railing connection to bridge railings, see Standard Plans A77J1, A77J2 and A77K1.
11. For guard railing connection details to abutments and walls, see Standard Plan A77J3.
12. Direction of adjacent traffic indicated by ➡.
13. For typical guard railing delineation and dike positioning details, see Standard Plan A77C4.
14. Slotted hole for bolted connection of rail element to block and post. See "Section Thru Rail Element".
15. Slotted holes for splice bolts to overlap ends of rail element. See "Section Thru Rail Element".
16. Additional hole in uppermost portion of line post is for potential future adjustments of railing height. See Standard Plan A77C1.
17. Install posts in soil.

STATE OF CALIFORNIA
DEPARTMENT OF TRANSPORTATION

METAL BEAM GUARD RAILING STANDARD RAILING SECTION (WOOD POST WITH WOOD BLOCK)

NO SCALE

RSP A77A1 DATED MAY 20, 2011 SUPERSEDES STANDARD PLAN A77A1
DATED MAY 1, 2006 - PAGE 41 OF THE STANDARD PLANS BOOK DATED MAY 2006.

REVISED STANDARD PLAN RSP A77A1

2006 REVISED STANDARD PLAN RSP A77A1

3-10-11

Dist	COUNTY	ROUTE	POST MILES TOTAL PROJECT	SHEET No.	TOTAL SHEETS
03	Sac	12	0.3/6.1	30	57

Randell D. Hiatt
REGISTERED CIVIL ENGINEER

May 20, 2011
PLANS APPROVAL DATE

REGISTERED PROFESSIONAL ENGINEER
Randell D. Hiatt
No. C50200
Exp. 6-30-11
CIVIL
STATE OF CALIFORNIA

The State of California or its officers or agents shall not be responsible for the accuracy or completeness of electronic copies of this plan sheet.

To accompany plans dated 5-14-12

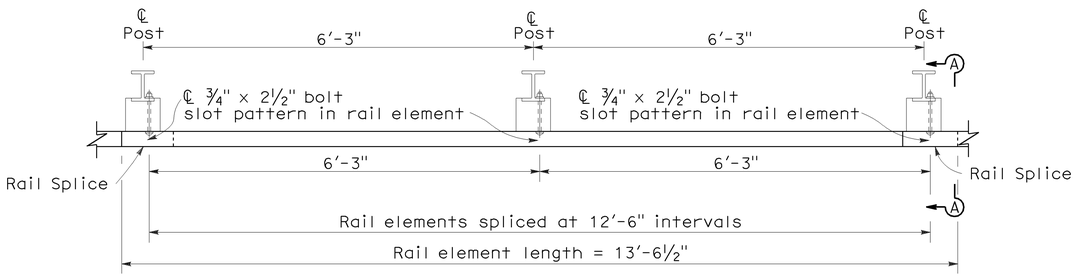

PLAN

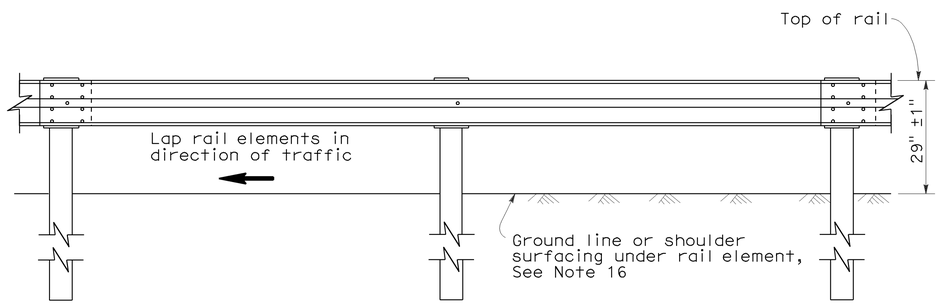

ELEVATION

METAL BEAM GUARD RAILING WITH STEEL POSTS AND NOTCHED WOOD OR NOTCHED RECYCLED PLASTIC BLOCKS

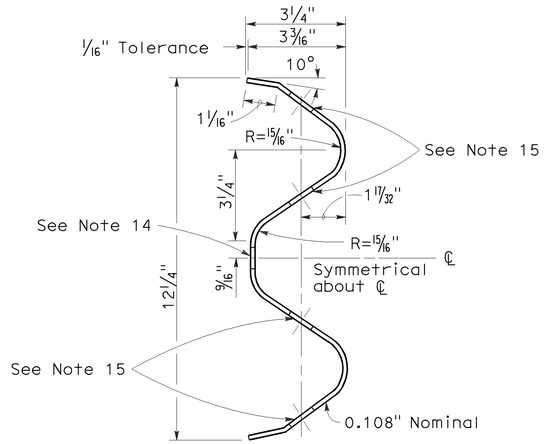

SECTION THRU RAIL ELEMENT

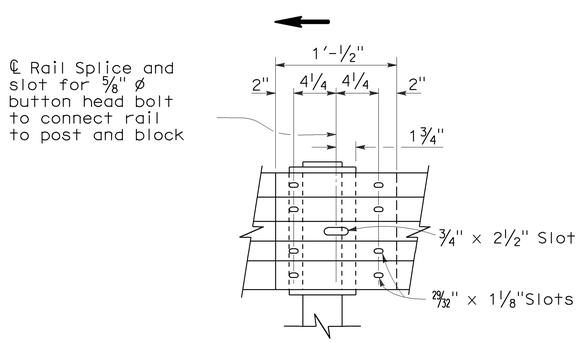

ELEVATION

RAIL ELEMENT SPLICE DETAIL

a) Connect the over lapped end of the rail elements with ⅝" ø x 1⅜" button head oval shoulder splice bolts inserted into the ²⁹⁄₃₂" x 1⅛" slots and bolted together with ⅝" ø recessed hex nuts. Recess of hex nut points toward rail element. A total of 8 bolts and nuts are to be used at each rail splice connection.

b) The ends of the rail elements are to be overlapped in the direction of traffic (see details).

c) Where end cap is to be attached to the end of a rail element, a total of 4 of the above described splice bolts and nuts are to be used.

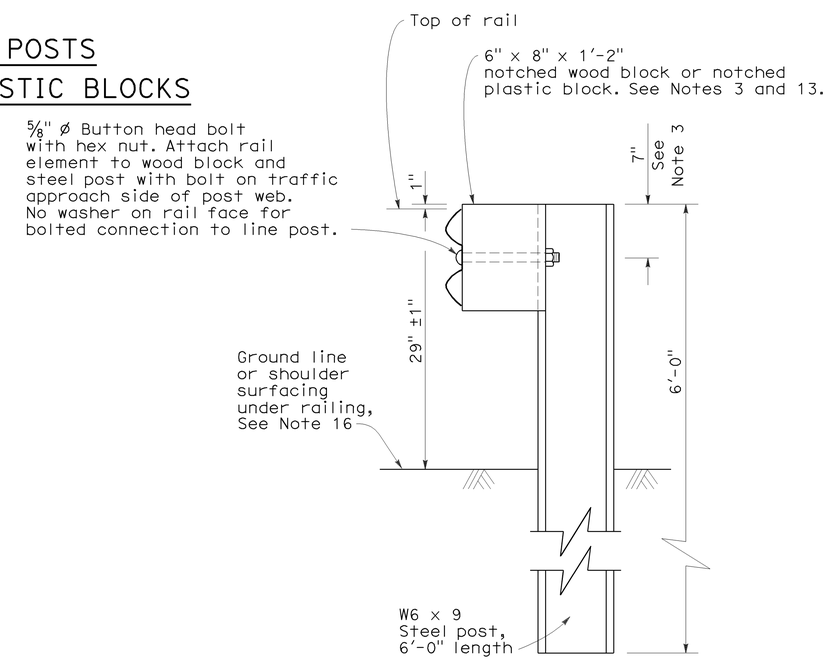

SECTION A-A

TYPICAL STEEL LINE POST INSTALLATION

See Note 4

NOTES:

1. For details of wood post installations, see Standard Plan A77A1.
2. For details of standard hardware used to construct guard railing, see Standard Plan A77B1.
3. For details of steel posts and notched wood blocks used to construct guard railing, see Standard Plan A77C2.
4. For additional installation details, see Standard Plan A77C3.
5. Guard railing post spacing to be 6'-3" center to center, except as otherwise noted.
6. For guard railing typical layouts, see the A77E, A77F and A77G Series of Standard Plans.
7. For terminal system end treatment details, see the A77L Series of Standard Plans. To connect railing to terminal system end treatment, transition the top of railing height at a ratio of 120:1 to terminal system end treatment height plus one 12'-6" standard railing section at the transitioned height for a horizontal connection to the end treatment.
8. For guard railing end anchor details, see Standard Plans A77H1 and A77I2.
9. For details of guard railing transition to bridge railing, see Standard Plan A77J4.
10. For additional details of guard railing connection to bridge railings, see Standard Plans A77J1, A77J2 and A77K1.
11. For dike positioning and guard railing delineation details, see Standard Plan A77C4.
12. Direction of adjacent traffic indicated by ⟶ .
13. Notched face of block faces steel post.
14. Slotted hole for bolted connection of rail element to block and post. See "Section Thru Rail Element".
15. Slotted holes for splice bolts to overlap ends of rail element. See "Section Thru Rail Element".
16. Install posts in soil.

STATE OF CALIFORNIA
DEPARTMENT OF TRANSPORTATION

METAL BEAM GUARD RAILING STANDARD RAILING SECTION (STEEL POST WITH NOTCHED WOOD OR NOTCHED RECYCLED PLASTIC BLOCK)

NO SCALE

RSP A77A2 DATED MAY 20, 2011 SUPERSEDES STANDARD PLAN A77A2 DATED MAY 1, 2006 - PAGE 42 OF THE STANDARD PLANS BOOK DATED MAY 2006.

REVISED STANDARD PLAN RSP A77A2

2006 REVISED STANDARD PLAN RSP A77A2

5-4-11

To accompany plans dated 5-14-12

Dist	COUNTY	ROUTE	POST MILES TOTAL PROJECT	SHEET No.	TOTAL SHEETS
03	Sac	12	0.3/6.1	31	57

Randell D. Hiatt
REGISTERED CIVIL ENGINEER

May 20, 2011
PLANS APPROVAL DATE

REGISTERED PROFESSIONAL ENGINEER
Randell D. Hiatt
No. C50200
Exp. 6-30-11
CIVIL
STATE OF CALIFORNIA

The State of California or its officers or agents shall not be responsible for the accuracy or completeness of electronic copies of this plan sheet.

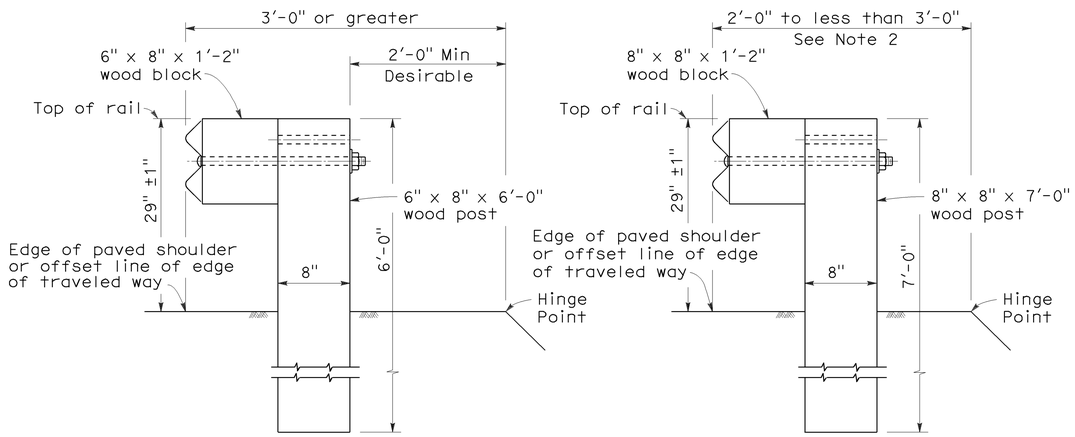

DETAIL A
TYPICAL ROADWAY INSTALLATION
See Note 1

DETAIL B
NARROW ROADWAY INSTALLATION
See Note 1

POST EMBEDMENT

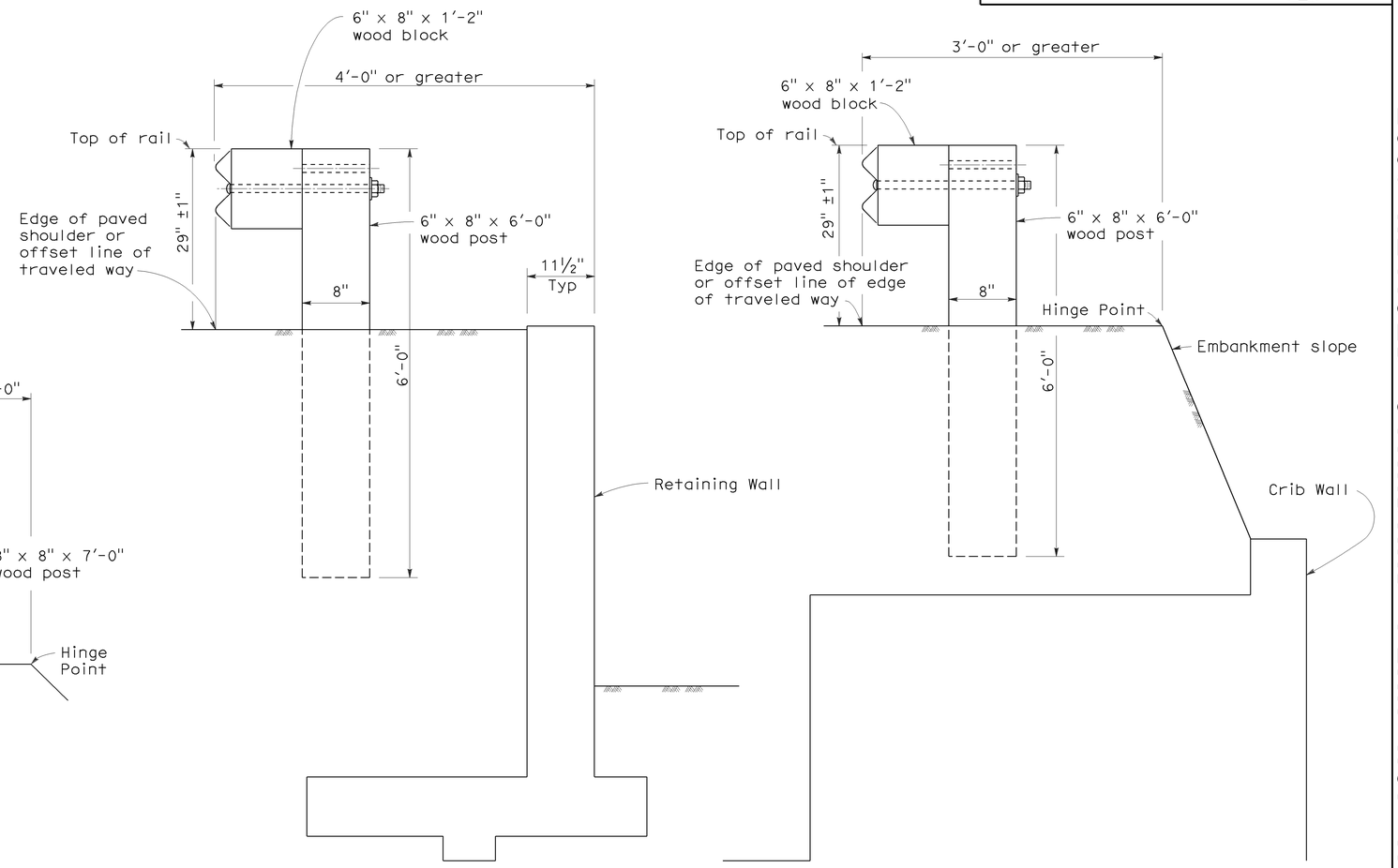

DETAIL C

DETAIL D

INSTALLATION AT EARTH RETAINING WALLS

NOTES:

1. These installation details also applicable to steel line post installations. For Detail A, C, and D, where steel line post installations are constructed, W6 x 9 steel post, 6'-0" in length, with 6" x 8" x 1'-2" notched wood blocks or notched recycled plastic blocks are to be used in place of the size of wood post and wood block shown. For Detail B, where steel line post installations are constructed, W6 x 9 steel post, 7'-0" in length, with 6" x 8" x 1'-2" notched wood blocks or notched recycled plastic blocks are to be used in place of the size of wood post and wood block shown. For additional installation details, see Standard Plans A77A1 and A77A2.
2. Where the distance between the face of the rail and the hinge point is less than 2'-0", see the Project Plans for special details.
3. For dike positioning with guard railing installations, see Standard Plan A77C4.

STATE OF CALIFORNIA
DEPARTMENT OF TRANSPORTATION

METAL BEAM GUARD RAILING TYPICAL LINE POST EMBEDMENT AND HINGE POINT OFFSET DETAILS

NO SCALE

RSP A77C3 DATED MAY 20, 2011 SUPERSEDES STANDARD PLAN A77C3
DATED MAY 1, 2006 - PAGE 46 OF THE STANDARD PLANS BOOK DATED MAY 2006.

REVISED STANDARD PLAN RSP A77C3

2006 REVISED STANDARD PLAN RSP A77C3

3-10-11

Dist	COUNTY	ROUTE	POST MILES TOTAL PROJECT	SHEET No.	TOTAL SHEETS
03	Sac	12	0.3/6.1	32	57

Randell D. Hiatt
REGISTERED CIVIL ENGINEER

May 20, 2011
PLANS APPROVAL DATE

REGISTERED PROFESSIONAL ENGINEER
Randell D. Hiatt
No. C50200
Exp. 6-30-11
CIVIL
STATE OF CALIFORNIA

The State of California or its officers or agents shall not be responsible for the accuracy or completeness of electronic copies of this plan sheet.

To accompany plans dated 5-14-12

NOTES:

1. When necessary to place dike in front of face of guard railing, only Type C dike may be used. For dike details, see Standard Plan A87B.
2. For standard railing post embedment, see Standard Plans A77C3.
3. Guard railing delineation to be used where shown on the Project Plans.
4. When dike or curb is placed under guard railing, the maximum height of the dike or curb shall be 4". Mountable dike should not be used. For dike and curb details, see Standard Plans A87A and A87B.
5. For details of typical distance between the face of rail and hinge point, see Standard Plan A77C3.
6. For steel line posts, use 1/4 - 20 self-tapping screws in 0.22" diameter holes or 1/4" bolts in 9/32" diameter holes.

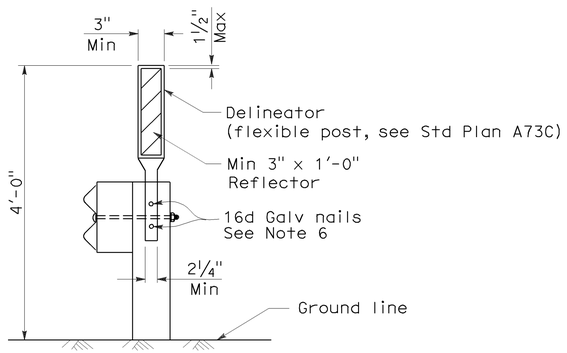

GUARD RAILING DELINEATION

See Note 3

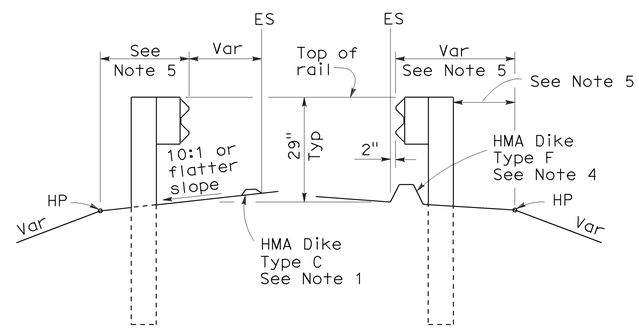

DIKE POSITIONING

See Note 1

STATE OF CALIFORNIA
DEPARTMENT OF TRANSPORTATION

METAL BEAM GUARD RAILING TYPICAL RAILING DELINEATION AND DIKE POSITIONING DETAILS

NO SCALE

RSP A77C4 DATED MAY 20, 2011 SUPERSEDES RSP A77C4 DATED JUNE 6, 2008 AND STANDARD PLAN A77C4 DATED MAY 1, 2006 - PAGE 47 OF THE STANDARD PLANS BOOK DATED MAY 2006.

REVISED STANDARD PLAN RSP A77C4

2006 REVISED STANDARD PLAN RSP A77C4

3-10-11

DIST	COUNTY	ROUTE	POST MILES TOTAL PROJECT	SHEET NO.	TOTAL SHEETS
03	Sac	12	0.3/6.1	33	57

Randell D. Hiatt
REGISTERED CIVIL ENGINEER

October 20, 2006
PLANS APPROVAL DATE

REGISTERED PROFESSIONAL ENGINEER
Randell D. Hiatt
No. C50200
Exp. 6-30-07
CIVIL
STATE OF CALIFORNIA

The State of California or its officers or agents shall not be responsible for the accuracy or completeness of electronic copies of this plan sheet.

To accompany plans dated 5-14-12

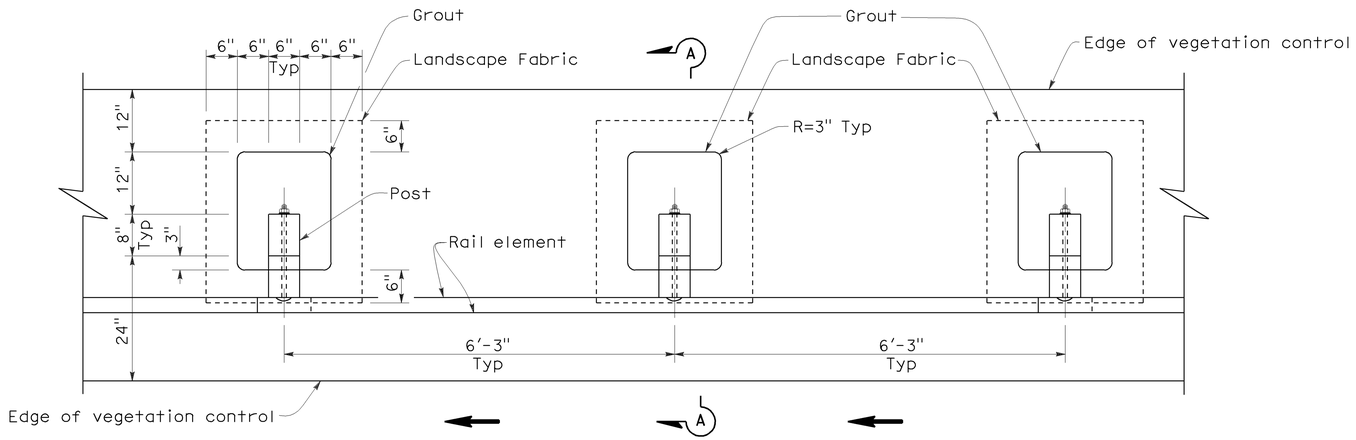

PLAN

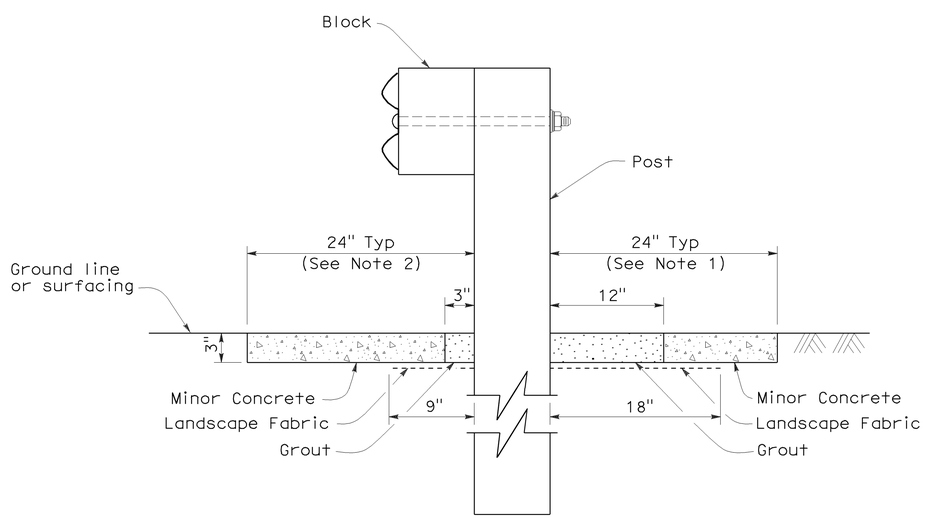

SECTION A-A

NOTES:

1. Where the distance between back of post and hinge point is less than 24", vegetation control to be constructed flush with the back edge of the post.
2. Where dike is constructed under railing, construct vegetation control to back edge of dike. Where paved shoulder is constructed within 24" in front of the post, construct vegetation control to the edge of paved shoulder.
3. Direction of adjacent traffic indicated by ← .

STATE OF CALIFORNIA
DEPARTMENT OF TRANSPORTATION

METAL BEAM GUARD RAILING TYPICAL VEGETATION CONTROL STANDARD RAILING SECTION

NO SCALE

NSP A77C5 DATED OCTOBER 20, 2006 SUPPLEMENTS THE STANDARD PLANS BOOK DATED MAY 2006.

NEW STANDARD PLAN NSP A77C5

2006 NEW STANDARD PLAN NSP A77C5

7-17-06

DIST	COUNTY	ROUTE	POST MILES TOTAL PROJECT	SHEET NO.	TOTAL SHEETS
03	Sac	12	0.3/6.1	34	57

Randell D. Hiatt
REGISTERED CIVIL ENGINEER

October 20, 2006
PLANS APPROVAL DATE

REGISTERED PROFESSIONAL ENGINEER
Randell D. Hiatt
No. C50200
Exp. 6-30-07
CIVIL
STATE OF CALIFORNIA

The State of California or its officers or agents shall not be responsible for the accuracy or completeness of electronic copies of this plan sheet.

To accompany plans dated 5-14-12

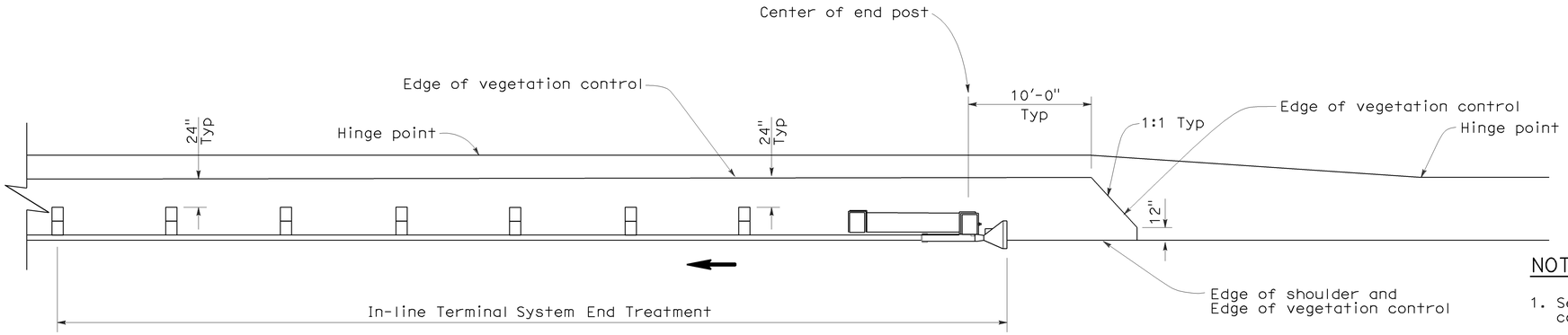

PLAN

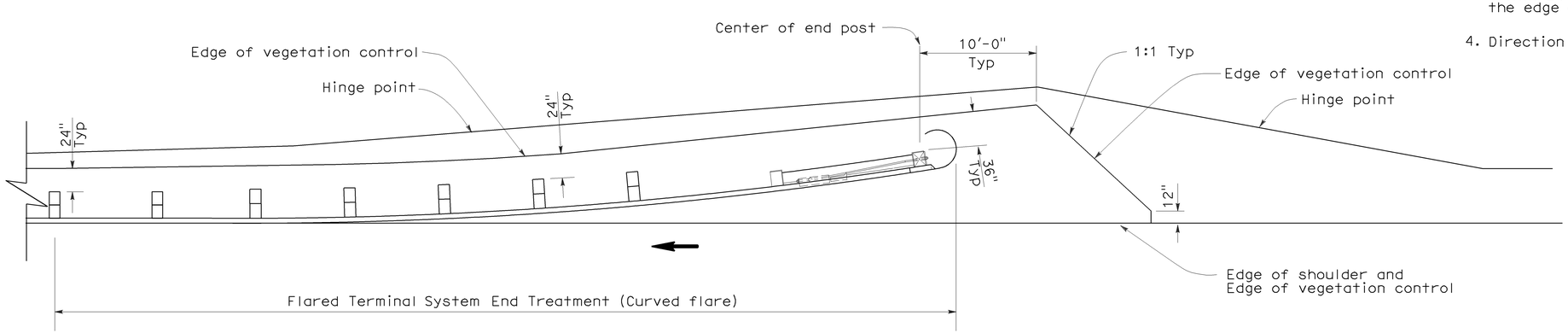

PLAN

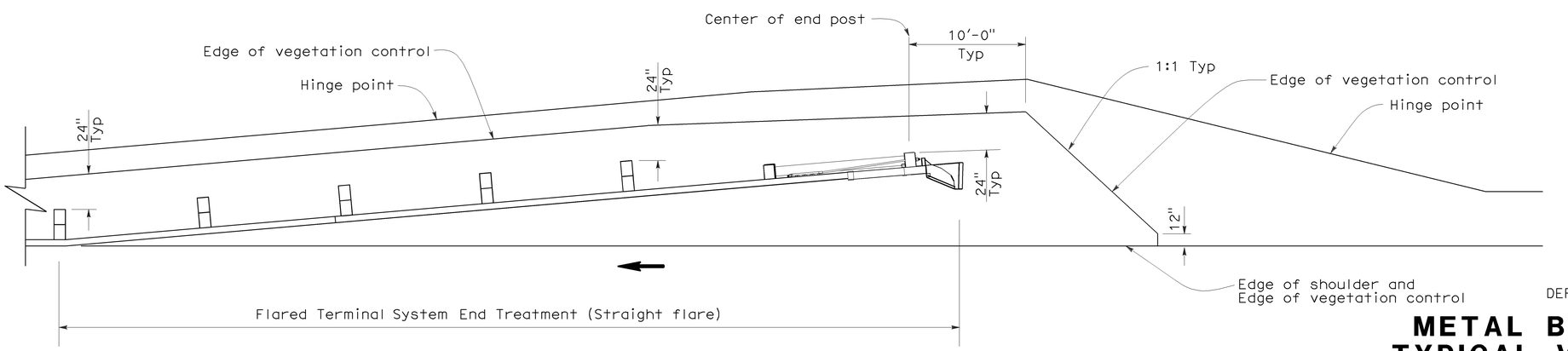

PLAN

NOTES:

1. See New Standard Plan NSP A77C5 for additional vegetation control details.
2. Where the distance between back of post and hinge point is less than 24", vegetation control to be constructed flush with the back edge of the post.
3. Where dike is constructed under railing, construct vegetation control to back edge of dike. Where paved shoulder is constructed within 24" in front of the post, construct vegetation control to the edge of paved shoulder.
4. Direction of adjacent traffic indicated by ←.

STATE OF CALIFORNIA
DEPARTMENT OF TRANSPORTATION

METAL BEAM GUARD RAILING TYPICAL VEGETATION CONTROL FOR TERMINAL SYSTEM END TREATMENTS

NO SCALE

NSP A77C6 DATED OCTOBER 20, 2006 SUPPLEMENTS THE STANDARD PLANS BOOK DATED MAY 2006.

NEW STANDARD PLAN NSP A77C6

2006 NEW STANDARD PLAN NSP A77C6

7-17-06

DIST	COUNTY	ROUTE	POST MILES TOTAL PROJECT	SHEET NO.	TOTAL SHEETS
03	Sac	12	0.3/6.1	35	57

Randell D. Hiatt
REGISTERED CIVIL ENGINEER

October 20, 2006
PLANS APPROVAL DATE

REGISTERED PROFESSIONAL ENGINEER
Randell D. Hiatt
No. C50200
Exp. 6-30-07
CIVIL
STATE OF CALIFORNIA

The State of California or its officers or agents shall not be responsible for the accuracy or completeness of electronic copies of this plan sheet.

To accompany plans dated 5-14-12

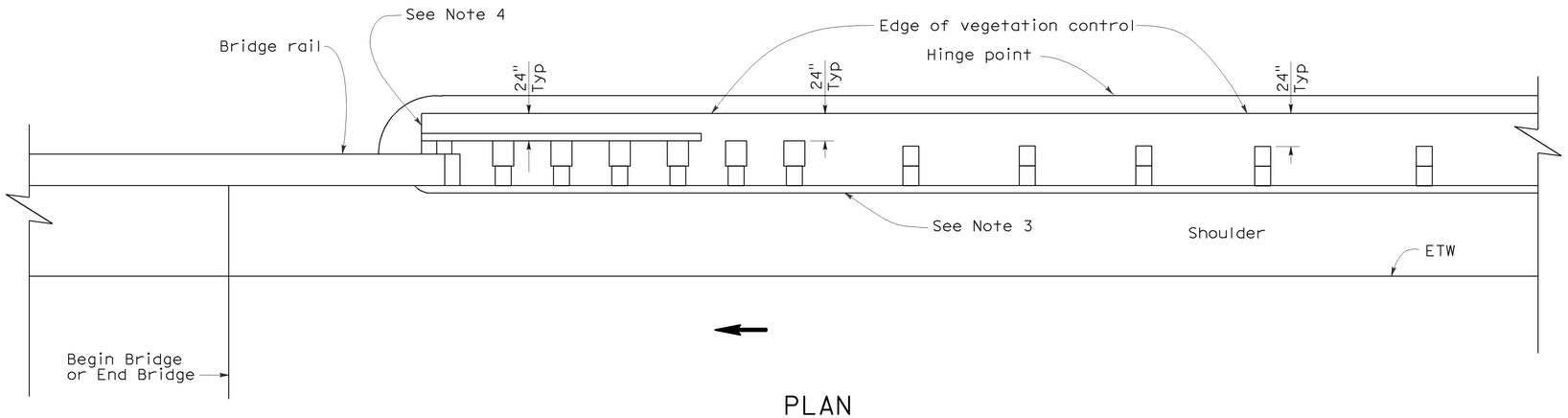

PLAN

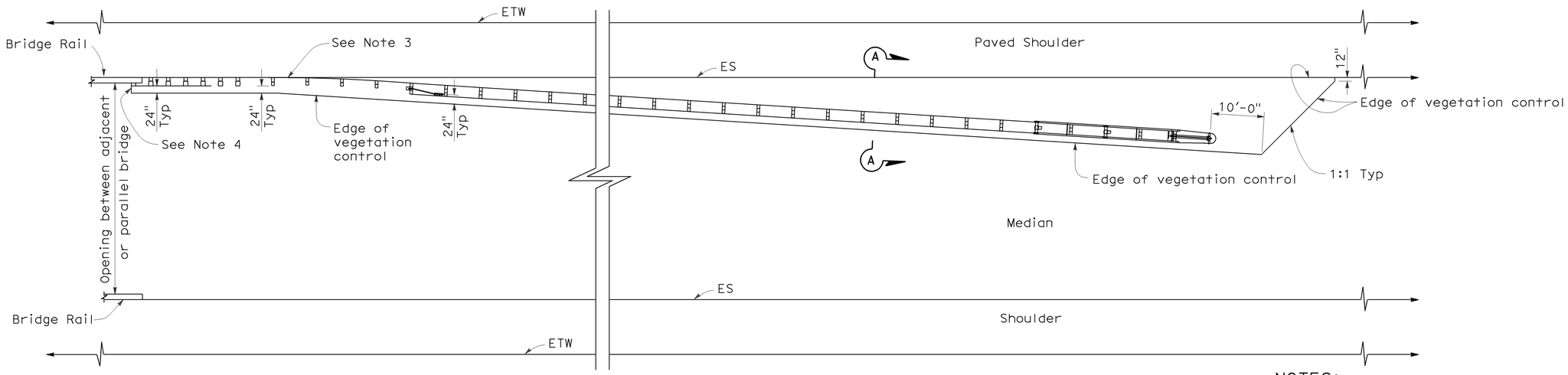

PLAN

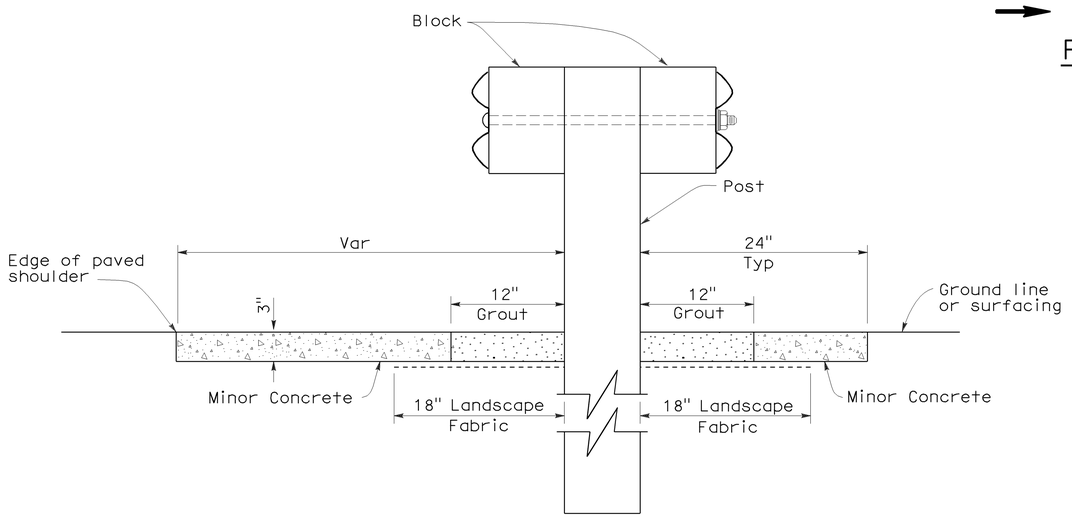

SECTION A-A

NOTES:

1. See New Standard Plan NSP A77C5 for additional vegetation control details.
2. Where the distance between back of post and hinge point is less than 24", vegetation control to be constructed flush with the back edge of the post.
3. Where dike is constructed under railing, construct vegetation control to back edge of dike. Where paved shoulder is constructed within 24" in front of the post, construct vegetation control to the edge of paved shoulder.
4. End vegetation control at end of backside rail element.
5. Direction of adjacent traffic indicated by ←.

STATE OF CALIFORNIA
DEPARTMENT OF TRANSPORTATION

METAL BEAM GUARD RAILING TYPICAL VEGETATION CONTROL AT STRUCTURE APPROACH AND DEPARTURE

NO SCALE

NSP A77C7 DATED OCTOBER 20, 2006 SUPPLEMENTS THE STANDARD PLANS BOOK DATED MAY 2006.

NEW STANDARD PLAN NSP A77C7

2006 NEW STANDARD PLAN NSP A77C7

7-17-06

DIST	COUNTY	ROUTE	POST MILES TOTAL PROJECT	SHEET NO.	TOTAL SHEETS
03	Sac	12	0.3/6.1	36	57

Randell D. Hiatt
REGISTERED CIVIL ENGINEER

October 20, 2006
PLANS APPROVAL DATE

REGISTERED PROFESSIONAL ENGINEER
Randell D. Hiatt
No. C50200
Exp. 6-30-07
CIVIL
STATE OF CALIFORNIA

The State of California or its officers or agents shall not be responsible for the accuracy or completeness of electronic copies of this plan sheet.

To accompany plans dated 5-14-12

NOTES:

1. See New Standard Plan NSP A77C5 for additional vegetation control details.
2. Where the distance between back of post and hinge point is less than 24", vegetation control to be constructed flush with the back edge of the post.
3. Where dike is constructed under railing, construct vegetation control to back edge of dike. Where paved shoulder is constructed within 24" in front of the post, construct vegetation control to the edge of paved shoulder.
4. Direction of adjacent traffic indicated by ←.

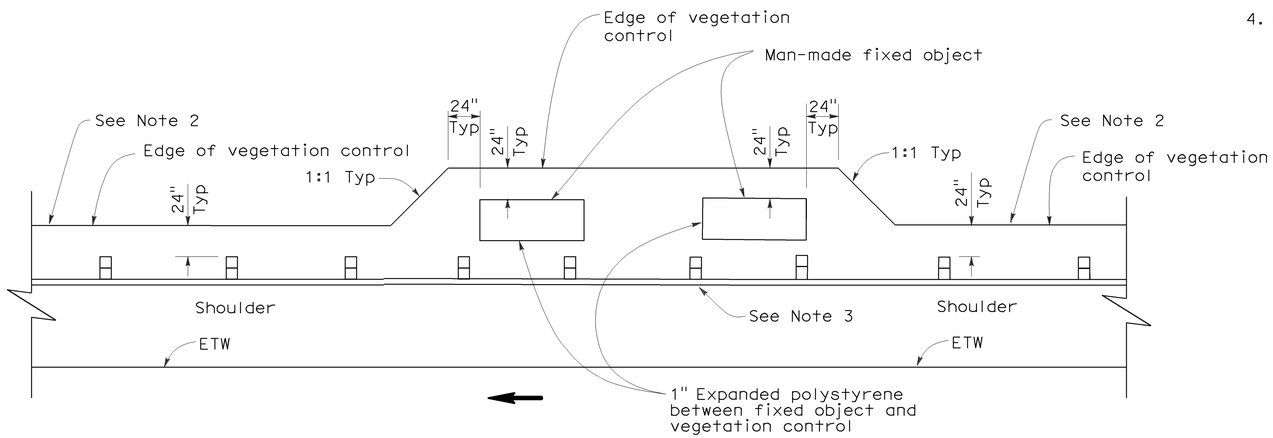

PLAN

FIXED OBJECT(S) ON SHOULDER

STATE OF CALIFORNIA
DEPARTMENT OF TRANSPORTATION

METAL BEAM GUARD RAILING TYPICAL VEGETATION CONTROL AT FIXED OBJECT

NO SCALE

NSP A77C8 DATED OCTOBER 20, 2006 SUPPLEMENTS THE STANDARD PLANS BOOK DATED MAY 2006.

NEW STANDARD PLAN NSP A77C8

2006 NEW STANDARD PLAN NSP A77C8

7-17-06

DIST	COUNTY	ROUTE	POST MILES TOTAL PROJECT	SHEET NO.	TOTAL SHEETS
03	Sac	12	0.3/6.1	37	57

Randell D. Hiatt
REGISTERED CIVIL ENGINEER

June 6, 2008
PLANS APPROVAL DATE

REGISTERED PROFESSIONAL ENGINEER
Randell D. Hiatt
No. C50200
Exp. 6-30-09
CIVIL
STATE OF CALIFORNIA

The State of California or its officers or agents shall not be responsible for the accuracy or completeness of electronic copies of this plan sheet.

To accompany plans dated 5-14-12

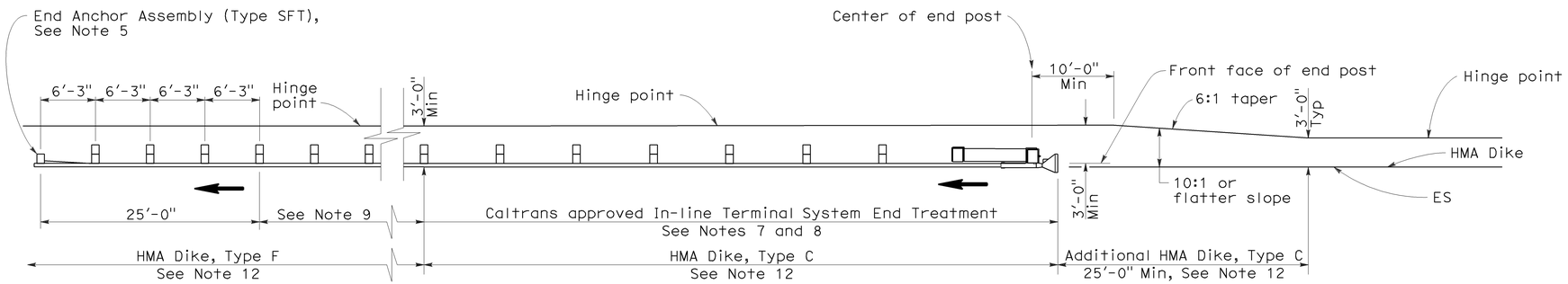

TYPE 11A LAYOUT

(EMBANKMENT GUARD INSTALLATION WITH IN-LINE END TREATMENT AT TRAFFIC APPROACH END OF RAILING)
See Note 6

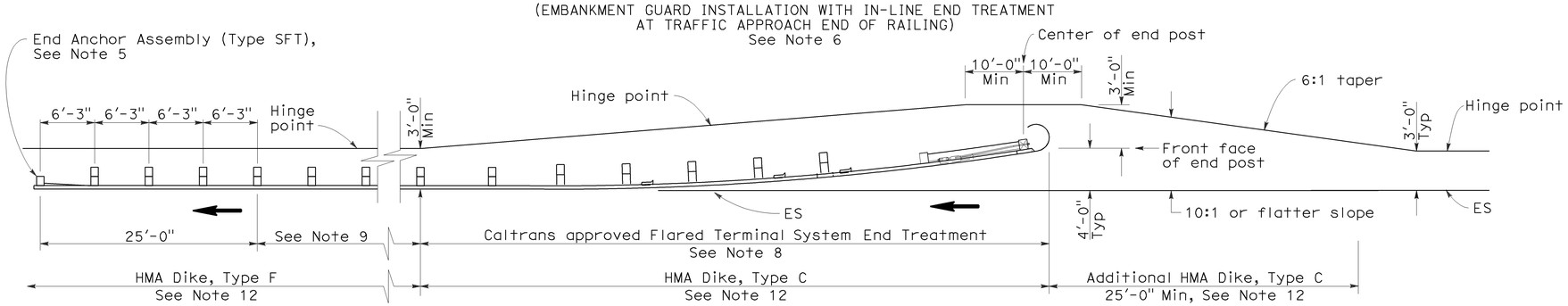

TYPE 11B LAYOUT

(EMBANKMENT GUARD RAILING INSTALLATION WITH FLARED END TREATMENT AT TRAFFIC APPROACH END OF RAILING)
See Note 6

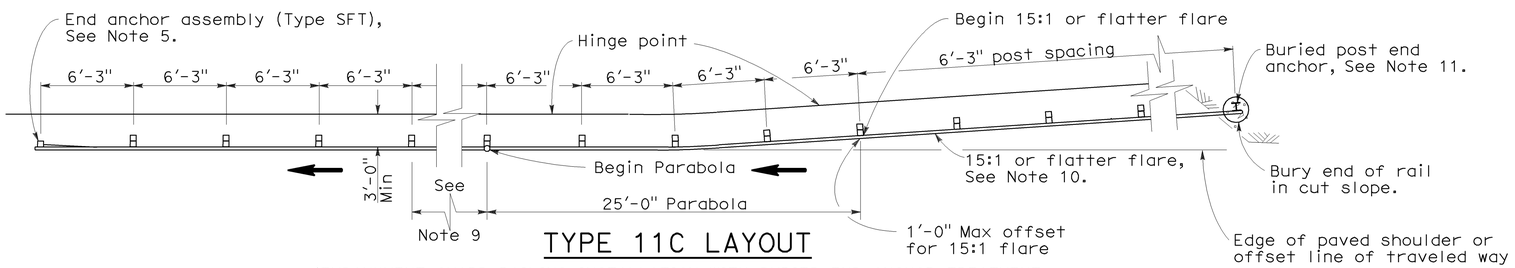

TYPE 11C LAYOUT

(EMBANKMENT GUARD RAILING INSTALLATION WITH BURIED END ANCHOR TREATMENT AT TRAFFIC APPROACH END OF RAILING)
See Notes 6 and 12

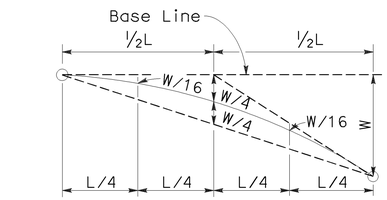

TYPICAL PARABOLIC LAYOUT

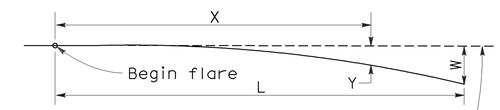

Base Line (Edge of paved shoulder or offset line of edge of traveled way)

$$Y = \frac{WX^2}{L^2}$$

Y = Offset from base line
W = Maximum offset
X = Distance along base line
L = Length of flare

PARABOLIC FLARE OFFSETS

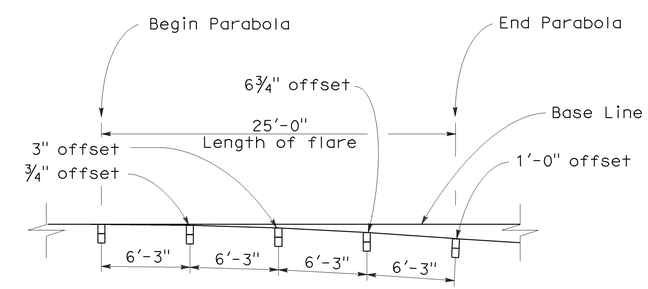

TYPICAL FLARE OFFSETS FOR 1 FOOT MAX END OFFSET

NOTES:

1. Line post, blocks and hardware to be used are shown on Standard Plans A77A1, A77A2, A77B1, A77C1, and A77C2.
2. Guard rail post spacing to be 6'-3" center to center, except as otherwise noted.
3. Except as noted, line posts are 6" x 8" x 6'-0" wood with 6" x 8" x 1'-2" wood blocks. W6 x 9 steel posts, 6'-0" in length, with 6" x 8" x 1'-2" notched wood blocks or recycled plastic blocks may be used for 6" x 8" x 6'-0" wood post with 6" x 8" x 1'-2" wood blocks where applicable and when specified.
4. Direction of adjacent traffic indicated by ➡.
5. For End Anchor Assembly (Type SFT) details, see Standard Plan A77H1.
6. Layout Types 11A, 11B or 11C are typically used where guard railing is recommended to shield embankment slopes and a crashworthy end treatment is required for only one direction of traffic.
7. In-line Terminal System End Treatments are used where site conditions will not accommodate a flared end treatment.
8. The type of terminal system end treatment to be used will be shown on the Project Plans.
9. Dependent on site conditions (embankment height and side slope), construction of additional guard railing (length equal to multiples of 12'-6" with 6'-3" post spacing) may be advisable.
10. The 15:1 or flatter flare used with buried end anchors is based on the edge of the paved shoulder or offset line of edge of the traveled way. The length of guard railing within the 15:1 or flatter flare is based on site conditions and should be a length equal to multiples of 12'-6".
11. For details of the buried post end anchor used with Type 11C Layout, see Standard Plan A77I2.
12. Where placement of dike is required with guard railing installations, see Revised Standard Plan RSP A77C4 for dike positioning details.

STATE OF CALIFORNIA
DEPARTMENT OF TRANSPORTATION

METAL BEAM GUARD RAILING TYPICAL LAYOUTS FOR EMBANKMENTS

NO SCALE

RSP A77E1 DATED JUNE 6, 2008 SUPERSEDES STANDARD PLAN A77E1
DATED MAY 1, 2006 - PAGE 48 OF THE STANDARD PLANS BOOK DATED MAY 2006.

REVISED STANDARD PLAN RSP A77E1

2006 REVISED STANDARD PLAN RSP A77E1

12-10-07

DIST	COUNTY	ROUTE	POST MILES TOTAL PROJECT	SHEET NO.	TOTAL SHEETS
03	Sac	12	0.3/6.1	38	57

Randell D. Hiatt
REGISTERED CIVIL ENGINEER

June 6, 2008
PLANS APPROVAL DATE

REGISTERED PROFESSIONAL ENGINEER
Randell D. Hiatt
No. C50200
Exp. 6-30-09
CIVIL
STATE OF CALIFORNIA

The State of California or its officers or agents shall not be responsible for the accuracy or completeness of electronic copies of this plan sheet.

To accompany plans dated 5-14-12

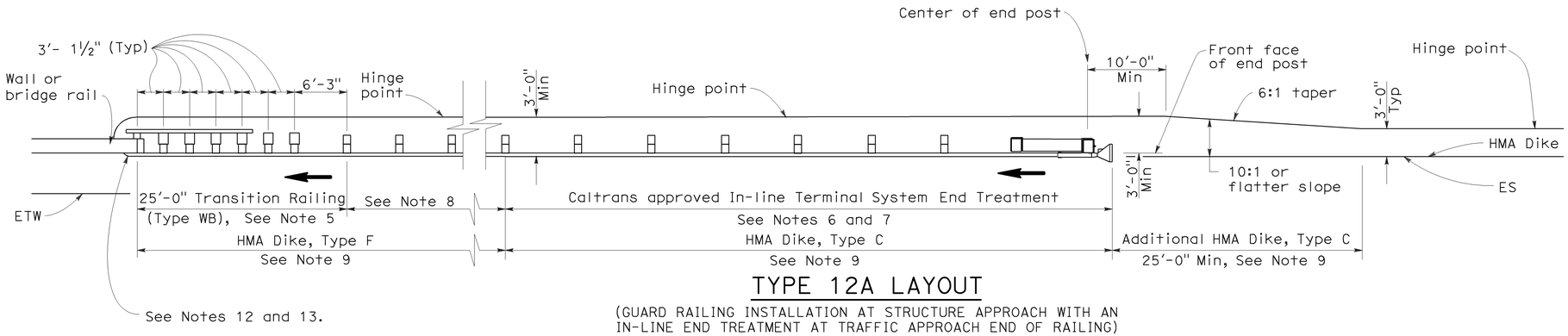

TYPE 12A LAYOUT

(GUARD RAILING INSTALLATION AT STRUCTURE APPROACH WITH AN IN-LINE END TREATMENT AT TRAFFIC APPROACH END OF RAILING)
See Notes 10

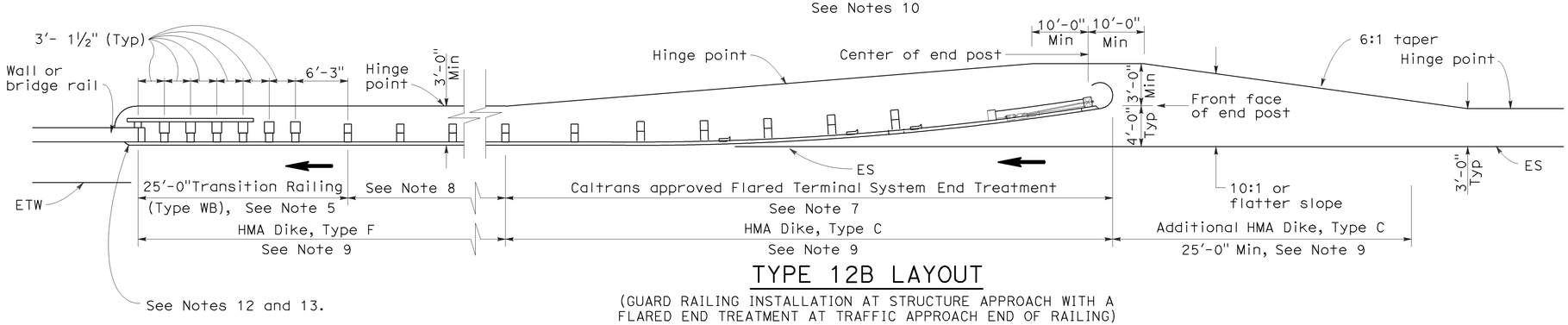

TYPE 12B LAYOUT

(GUARD RAILING INSTALLATION AT STRUCTURE APPROACH WITH A FLARED END TREATMENT AT TRAFFIC APPROACH END OF RAILING)
See Notes 10

NOTES:

1. Line post, blocks and hardware to be used are shown on Standard Plans A77A1, A77A2, A77B1, A77C1 and A77C2.
2. Guard rail post spacing to be 6'-3" center to center, except as otherwise noted.
3. Except as noted, line posts are 6" x 8" x 6'-0" wood with 6" x 8" x 1'-2" wood blocks. W6 x 9 steel posts, 6'-0" in length, with 6" x 8" x 1'-2" notched wood blocks or plastic blocks may be used for 6" x 8" x 6'-0" wood posts with 6" x 8" x 1'-2" wood blocks where applicable and when specified.
4. Direction of adjacent traffic indicated by ➡.
5. For Transition Railing (Type WB) details for Types 12A and 12B Layouts, see Standard Plan A77J4.
6. In-line Terminal System End Treatments are used where site conditions will not accommodate a flared end treatment.
7. The type of terminal system end treatment to be used will be shown on the Project Plans.
8. Dependent on site conditions (embankment height, side slopes, or other fixed objects), it may be advisable to construct additional guard railing (a length equal to multiples of 12'-6" with 6'-3" post spacing) between the transition railing and end treatment.
9. Where placement of dike is required with guard railing installations, see Revised Standard Plan RSP A77C4 for dike positioning details.
10. Type 12A or Type 12B Layouts are typically used:
    a. To the right of approaching traffic, at the end of a structure, on two-lane conventional highway where the roadbed width across the structure is less than 40 feet.
    b. To the left of approaching traffic, at the end of a structure, on two-lane conventional highway where the roadbed width across the structure is less than 40 feet.
    c. To the right of approaching traffic at the end of each structure on multilane freeways or expressways with separate adjacent or parallel bridges.
    d. To the right of approaching traffic at the end of the structure on multilane freeways or expressways with decked median on the bridge.
11. See Revised Standard Plan RSP A77F3 for typical layout used left of approaching traffic at the ends of each structure on multilane freeways or expressways with separate adjacent or parallel bridges.
12. For additional details of typical connections to bridge rail, see Connection Detail AA on Revised Standard Plans RSP A77J1 and RSP A77J2 and Connection Detail FF on Standard Plans A77K1 and A77K2.
13. For additional details of a typical connection to walls or abutments, see Standard Plan A77J3.

STATE OF CALIFORNIA
DEPARTMENT OF TRANSPORTATION

METAL BEAM GUARD RAILING TYPICAL LAYOUTS FOR STRUCTURE APPROACH

NO SCALE

RSP A77F1 DATED JUNE 6, 2008 SUPERSEDES STANDARD PLAN A77F1
DATED MAY 1, 2006 - PAGE 54 OF THE STANDARD PLANS BOOK DATED MAY 2006.

REVISED STANDARD PLAN RSP A77F1

2006 REVISED STANDARD PLAN RSP A77F1

DIST	COUNTY	ROUTE	POST MILES TOTAL PROJECT	SHEET NO.	TOTAL SHEETS
03	Sac	12	0.3/6.1	39	57

Randell D. Hiatt
REGISTERED CIVIL ENGINEER

June 6, 2008
PLANS APPROVAL DATE

REGISTERED PROFESSIONAL ENGINEER
Randell D. Hiatt
No. C50200
Exp. 6-30-09
CIVIL
STATE OF CALIFORNIA

The State of California or its officers or agents shall not be responsible for the accuracy or completeness of electronic copies of this plan sheet.

To accompany plans dated 5-14-12

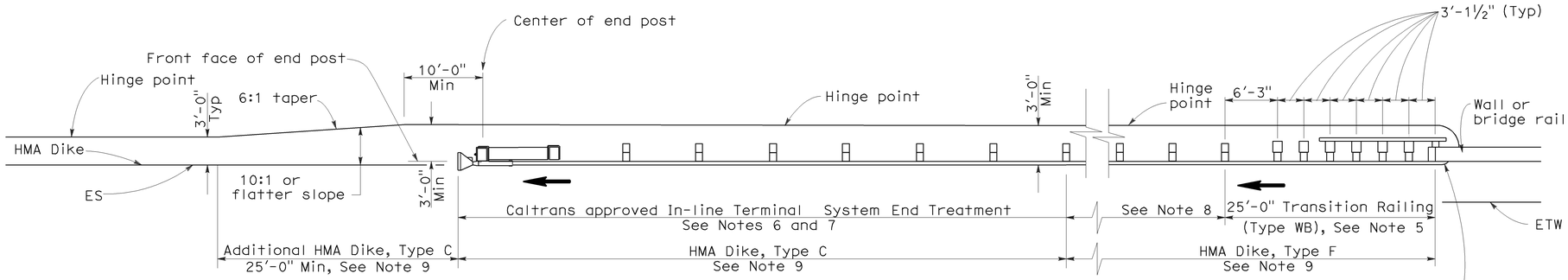

TYPE 12AA LAYOUT

(GUARD RAILING INSTALLATION AT STRUCTURE DEPARTURE WITH AN IN-LINE END TREATMENT AT TRAILING END OF RAILING)
See Notes 9 and 10

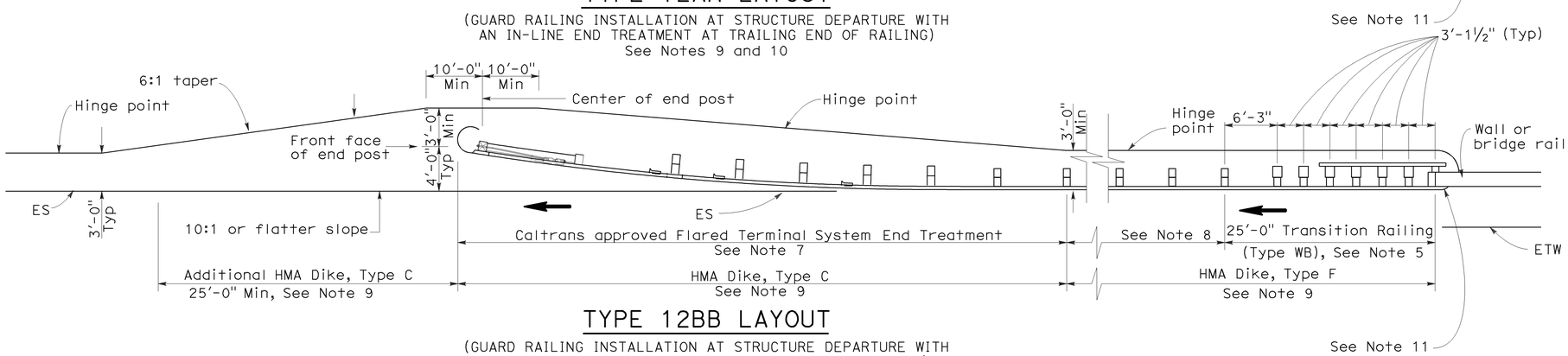

TYPE 12BB LAYOUT

(GUARD RAILING INSTALLATION AT STRUCTURE DEPARTURE WITH A FLARED END TREATMENT AT TRAILING END OF RAILING)
See Notes 9 and 10

NOTES:

1. Line post, blocks and hardware to be used are shown on Standard Plans A77A1, A77A2, A77B1, A77C1 and A77C2.
2. Guard rail post spacing to be 6'-3" center to center, except as otherwise noted.
3. Except as noted, line posts are 6" x 8" x 6'-0" wood with 6" x 8" x 1'-2" wood blocks. W6 x 9 steel posts, 6'-0" in length, with 6" x 8" x 1-2" notched wood blocks or notched recycled plastic blocks may be used for 6" x 8" x 6'-0" wood posts with 6" x 8" x 1'-2" wood blocks where applicable and when specified.
4. Direction of adjacent traffic indicated by ➡.
5. For Transition Railing (Type WB) details for Types 12AA and 12BB Layouts, see Standard Plan A77J4.
6. In-line Terminal System Treatments are used where site conditions will not accommodate a flared end treatment.
7. The type of terminal system to be used will be shown on the Project Plans.
8. Dependent on site conditions (embankment height, side slopes, other fixed objects), it may be advisable to construct additional guard railing (a length equal to multiples of 12'-6" with 6'-3" post spacing) between the transition railing and end treatments.
9. Where placement of dike is required with guard railing installations, see Revised Standard Plan RSP A77C4 for dike positioning details.
10. Type 12AA or Type 12BB Layouts are typically used to the right of traffic departing a structure on two-way conventional highways where the roadbed width across the structure is less than 40 feet.
11. For additional details of typical connections to bridge rail, see Connection Detail CC on Revised Standard Plan RSP A77J2 and Connection Detail HH on Standard Plans A77k2.

STATE OF CALIFORNIA
DEPARTMENT OF TRANSPORTATION

METAL BEAM GUARD RAILING TYPICAL LAYOUTS FOR STRUCTURE DEPARTURE

NO SCALE

RSP A77F4 DATED JUNE 6, 2008 SUPERSEDES STANDARD PLAN A77F4
DATED MAY 1, 2006 - PAGE 57 OF THE STANDARD PLANS BOOK DATED MAY 2006.

REVISED STANDARD PLAN RSP A77F4

2006 REVISED STANDARD PLAN RSP A77F4

12-10-07

Dist	COUNTY	ROUTE	POST MILES TOTAL PROJECT	SHEET No.	TOTAL SHEETS
03	Sac	12	0.3/6.1	40	57

Randell D. Hiatt
REGISTERED CIVIL ENGINEER

May 20, 2011
PLANS APPROVAL DATE

REGISTERED PROFESSIONAL ENGINEER
Randell D. Hiatt
No. C50200
Exp. 6-30-11
CIVIL
STATE OF CALIFORNIA

The State of California or its officers or agents shall not be responsible for the accuracy or completeness of electronic copies of this plan sheet.

To accompany plans dated 5-14-12

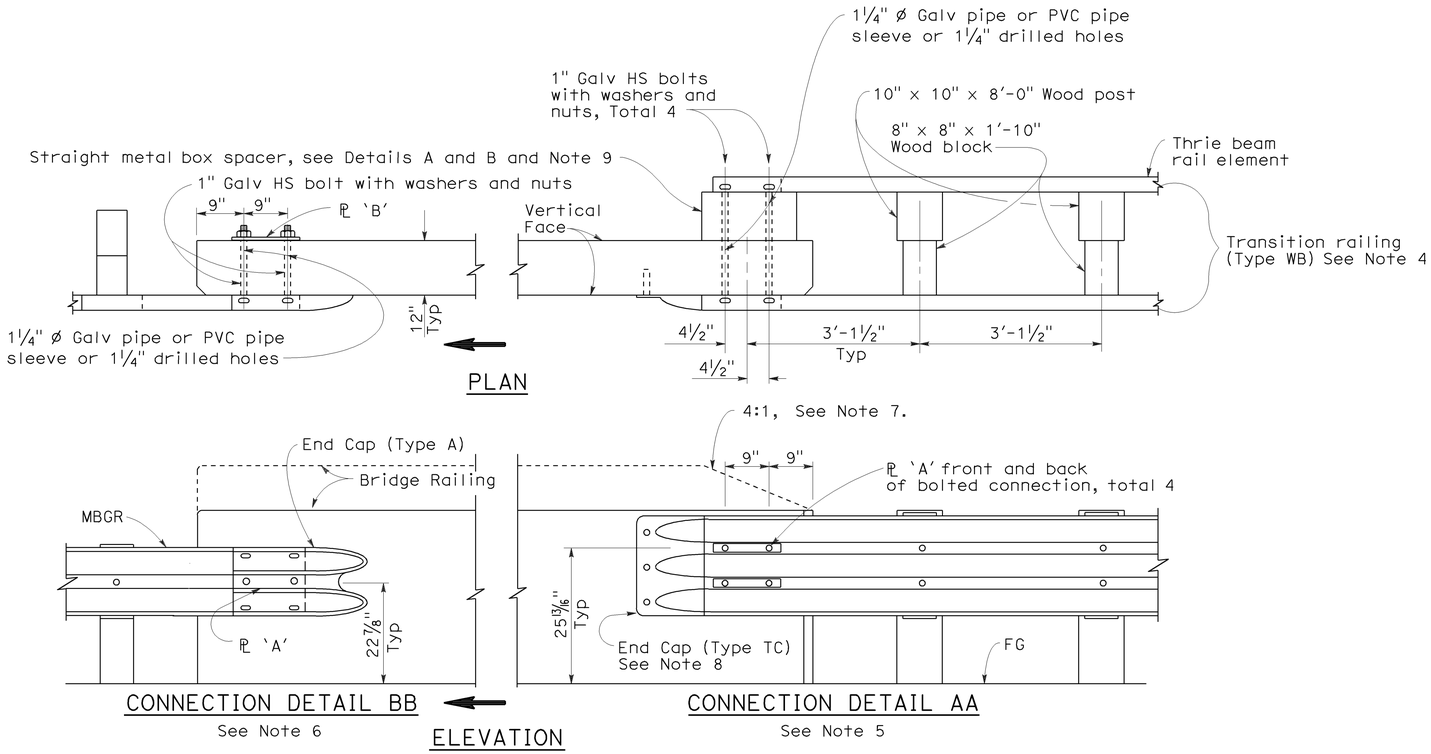

GUARD RAILING CONNECTION TO BRIDGE RAILING WITHOUT SIDEWALK

NOTES:

1. See Revised Standard Plan RSP A77J2 for additional connection details to bridges without sidewalks.
2. Additional details of posts, blocks and hardware are shown on Standard Plan A77B1, A77C1 and A77C2.
3. Direction of adjacent traffic indicated by ➡.
4. For additional details of Transition Railing (Type WB), see Standard Plan A77J4. Transition Railing (Type WB) transitions the 12 gage w-beam standard railing section of guard railing to a heavier gage nested thrie beam railing section which is connected to the concrete bridge railing.
5. For typical use of Connection Detail AA, see Layout Types 12A and 12B on Revised Standard Plan RSP A77F1, Layout Types 12C and 12D on Standard Plan A77F2, and Layout Type 12E on Revised Standard Plan RSP A77F3.
6. For typical use of Connection Detail BB, see Layout Type 12D (structure departure railing connection) on Standard Plan A77F2 and Layout Type 12DD on Standard Plan A77F5.
7. Where the height of the bridge railing exceeds the height of the thrie beam railing by more than 1" at Connection Detail AA, taper the top of the end of the bridge railing at 4:1 to match the top elevation of the thrie beam rail.
8. For details of End Cap (Type TC), see Standard Plan A77J4.
9. See Standard Plan A77J4 for additional details regarding depth dimension for straight metal box spacer.

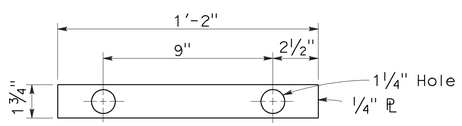

PLATE 'A'

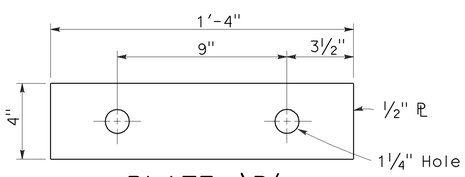

PLATE 'B'
(For backside of connection BB)

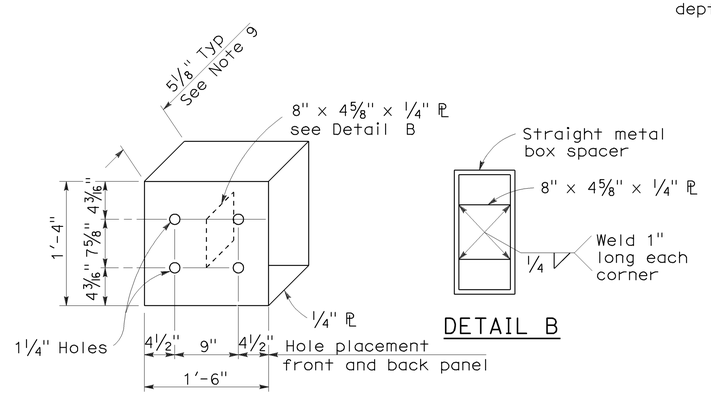

DETAIL A

DETAIL B

STRAIGHT METAL BOX SPACER

STATE OF CALIFORNIA
DEPARTMENT OF TRANSPORTATION

METAL BEAM GUARD RAILING CONNECTIONS TO BRIDGE RAILINGS WITHOUT SIDEWALKS DETAILS No.1

NO SCALE

RSP A77J1 DATED MAY 20, 2011 SUPERSEDES RSP A77J1 DATED JUNE 6, 2008 AND STANDARD PLAN A77J1 DATED MAY 1, 2006 - PAGE 72 OF THE STANDARD PLANS BOOK DATED MAY 2006.

REVISED STANDARD PLAN RSP A77J1

2006 REVISED STANDARD PLAN RSP A77J1

3-10-11

DIST	COUNTY	ROUTE	POST MILES TOTAL PROJECT	SHEET NO.	TOTAL SHEETS
03	Sac	12	0.3/6.1	41	57

Randell D. Hiatt
REGISTERED CIVIL ENGINEER

June 6, 2008
PLANS APPROVAL DATE

REGISTERED PROFESSIONAL ENGINEER
Randell D. Hiatt
No. C50200
Exp. 6-30-09
CIVIL
STATE OF CALIFORNIA

The State of California or its officers or agents shall not be responsible for the accuracy or completeness of electronic copies of this plan sheet.

To accompany plans dated 5-14-12

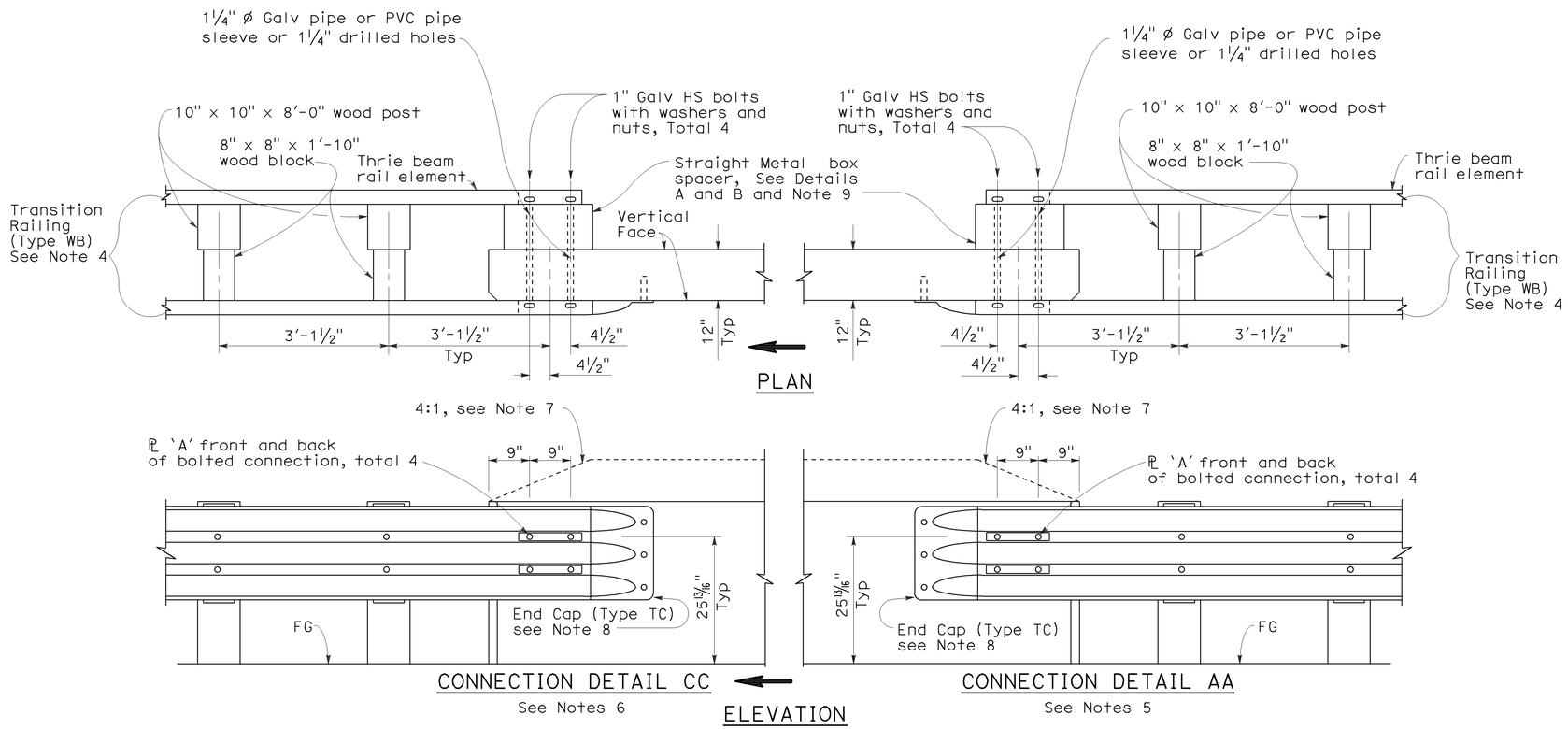

GUARD RAILING CONNECTION TO BRIDGE RAILING WITHOUT SIDEWALK

NOTES:

1. See Revised Standard Plan RSP A77J1 for additional connection details to bridges without sidewalks.
2. Additional details of posts, blocks and hardware are shown on Standard Plan A77B1, A77C1 and A77C2.
3. Direction of adjacent traffic indicated by ⟹.
4. For additional details of Transition Railing (Type WB), see Standard Plan A77J4. Transition Railing (Type WB) transitions the 12 gage w-beam standard railing section of guard railing to a heavier gage nested thrie beam railing section which is connected to the concrete bridge railing.
5. For typical use of Connection Detail AA, see Layout Types 12A and 12B on Revised Standard Plan RSP A77F1, Layout Types 12C and 12D on Standard Plan A77F2, and Layout Type 12E on Revised Standard Plan RSP A77F3.
6. For typical use of Connection Detail CC, see Layout Types 12AA and 12BB on Standard Plan A77F4 and Layout Type 12CC on Standard Plan A77F5.
7. Where the height of the bridge railing exceeds the height of the thrie beam railing by more than 1" at Connection Detail AA and connection Detail CC, taper the top of the end of the bridge railing at 4:1 to match the top elevation of the thrie beam railing.
8. For details of End Cap (Type TC), see Standard Plans A77J4.
9. See Standard Plans A77J4 for additional details regarding depth dimension for straight metal box spacer.

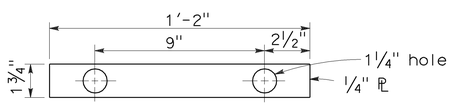

PLATE 'A'

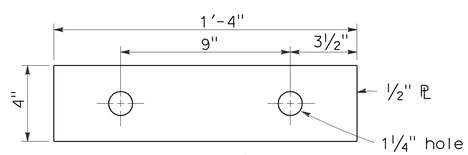

PLATE 'B'
(For backside of connection BB)

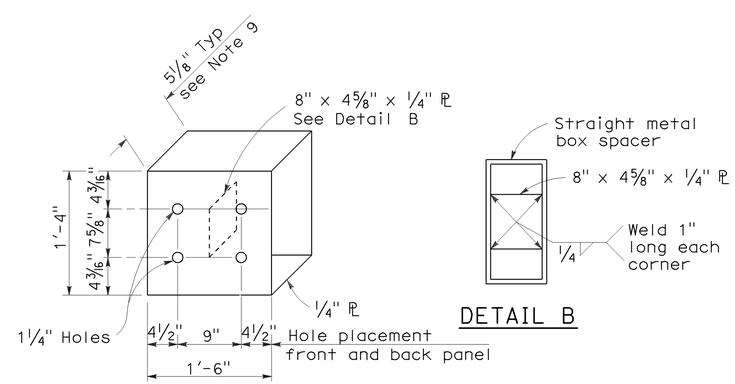

DETAIL A

DETAIL B

STRAIGHT METAL BOX SPACER

STATE OF CALIFORNIA
DEPARTMENT OF TRANSPORTATION

METAL BEAM GUARD RAILING CONNECTIONS TO BRIDGE RAILINGS WITHOUT SIDEWALKS DETAILS No.2

NO SCALE

RSP A77J2 DATED JUNE 6, 2008 SUPERSEDES STANDARD PLAN A77J2 DATED MAY 1, 2006 - PAGE 73 OF THE STANDARD PLANS BOOK DATED MAY 2006.

REVISED STANDARD PLAN RSP A77J2

2006 REVISED STANDARD PLAN RSP A77J2

12-10-07

Dist	COUNTY	ROUTE	POST MILES TOTAL PROJECT	SHEET No.	TOTAL SHEETS
03	Sac	12	0.3/6.1	42	57

Randell D. Hiatt
REGISTERED CIVIL ENGINEER

May 20, 2011
PLANS APPROVAL DATE

REGISTERED PROFESSIONAL ENGINEER
Randell D. Hiatt
No. C50200
Exp. 6-30-11
CIVIL
STATE OF CALIFORNIA

To accompany plans dated 5-14-12

The State of California or its officers or agents shall not be responsible for the accuracy or completeness of electronic copies of this plan sheet.

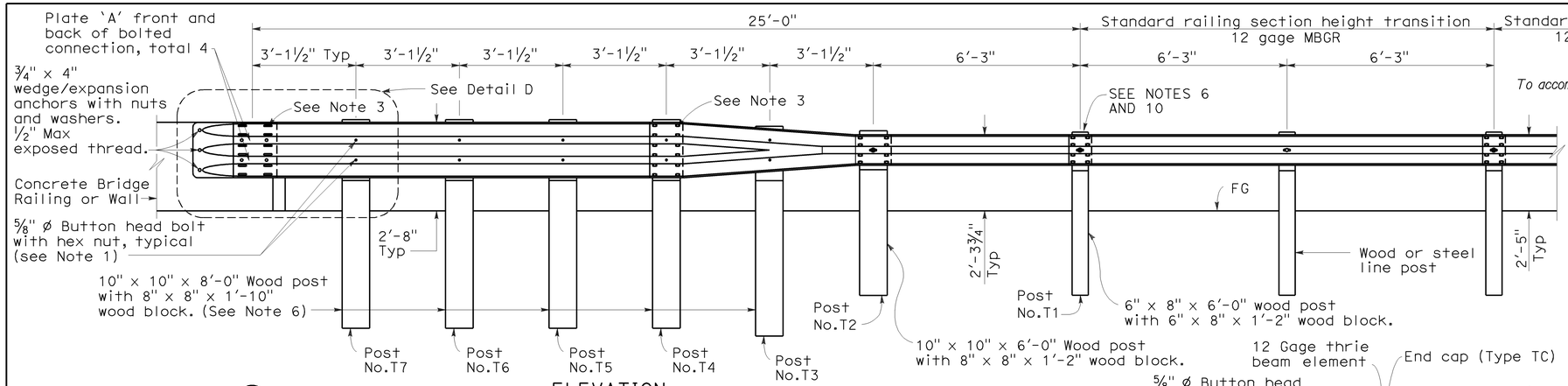

ELEVATION

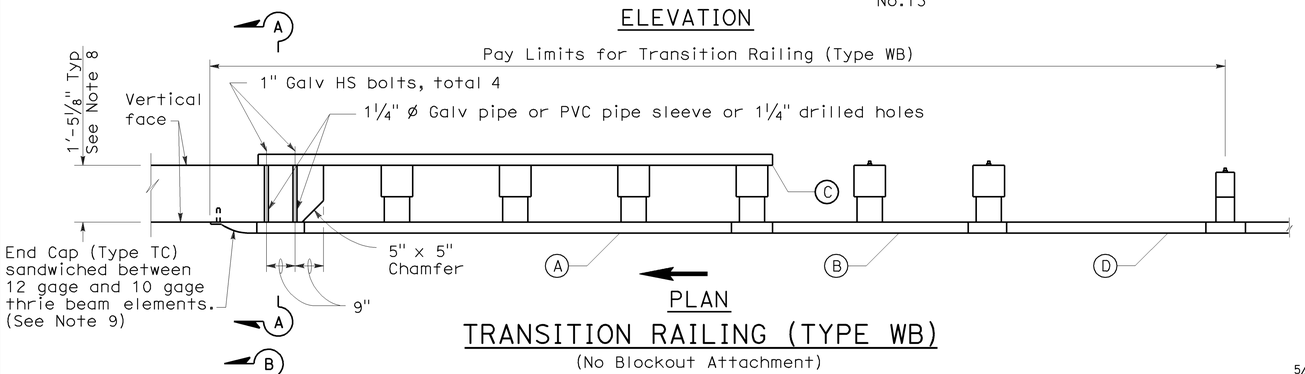

PLAN

TRANSITION RAILING (TYPE WB)

(No Blockout Attachment)

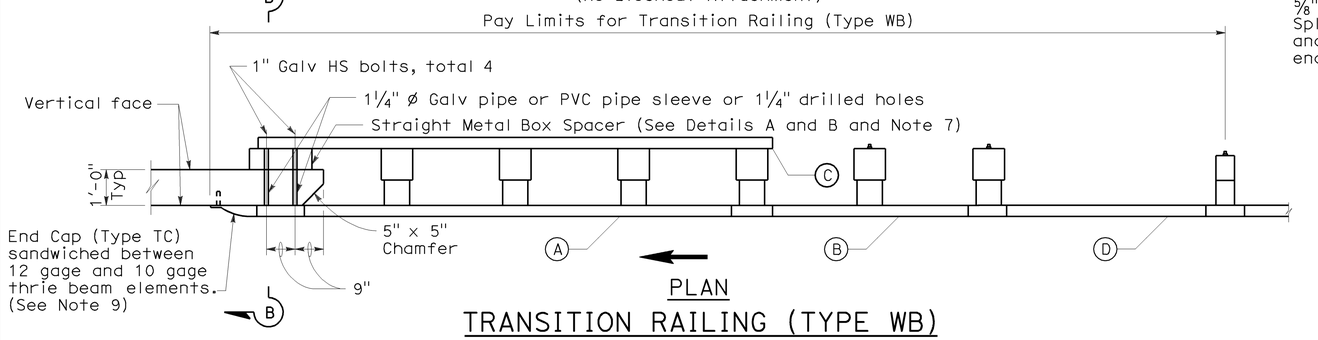

PLAN

TRANSITION RAILING (TYPE WB)

(Blockout Attachment)

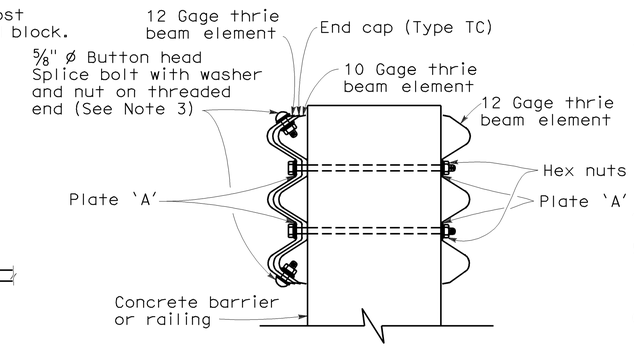

SECTION A-A

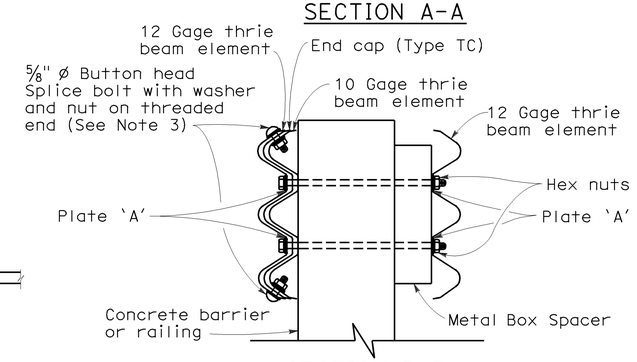

SECTION B-B

NOTES:

1. Use ⅝" ø Button head bolts and hex nuts for connections to posts. No washer on rail face for bolted connections to post.
2. The nested rail elements, end cap, and 'W' beam to thrie beam element may be spliced together prior to bolting the elements to the wood post and concrete barrier or railing.
3. Exterior splice bolt holes for rail element splices at Post No. T4 and the connection to the concrete barrier or railing shall be the standard 29/32" x 1⅛" slot size. Interior splice bolt holes at these locations may be increased up to 1¼" ø. Only the top 2 and the bottom 2 splice bolts with washers and nuts are required for rail splices at Post No. T4 and the connection to the concrete barrier or railing.
4. Direction of adjacent traffic indicated by ➡.
5. The top elevation of Posts No. T2 through No. T7 shall not project more than 1" above the top elevation of the rail element.
6. Typically, the railing connected to Transition Railing (Type WB) will be either standard railing section of metal beam guard railing with height transition ratio of 120:1 or an approved Caltrans end treatment attached to Post No. T1.
7. The depth of the metal box spacer varies from the 5⅛" to 1½" and is dependent on the width of the concrete railing or wall. The combined dimension for the depth of the metal box spacer plus the width of railing or wall is typically 17⅛". Where the space between the backside of the concrete railing or wall and the rear thrie beam element is less than 1½", metal plates similar to Plate 'A' are to be used as spacers.
8. Where the width of the concrete railing or wall is greater than 17⅛", wood blocks are to be used to fill the space created between the backside of Posts No. T4 through No. T7 and the rear thrie beam element. These wood blocks shall be 8" in width and 1'-2" in length. The dimension between the front thrie beam element and the rear thrie beam element is to match the width of the concrete railing or wall.
9. End cap may be installed over 12 gage and 10 gage thrie beam elements where transition railing is installed on the departure end of bridge railing.
10. Conform standard railing section height to 2'-3¾" at Post No. T1 using height transition ratio of 120:1.

LEGEND

(A) Nested thrie beam elements (one 12 gage element nested over one 10 gage element).

(B) One 10 gage "W" beam to thrie beam element.

(C) One 12 gage thrie beam element.

(D) One 10 gage "W" beam rail element (7'-3½" length)

10 gage = 0.135" thick

12 gage = 0.108" thick

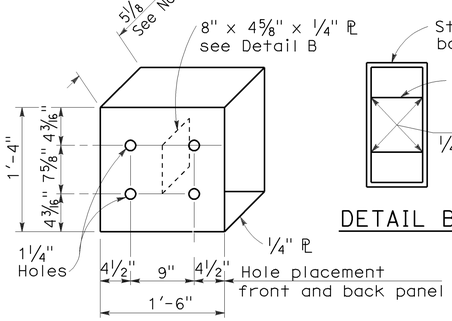

DETAIL A

STRAIGHT METAL BOX SPACER

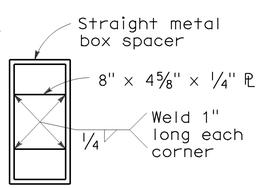

DETAIL B

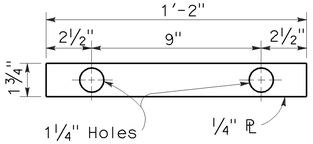

DETAIL C

PLATE 'A'

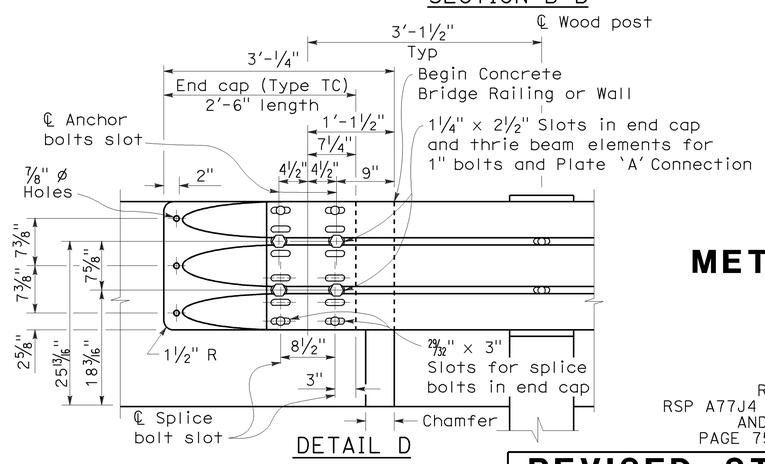

DETAIL D

STATE OF CALIFORNIA
DEPARTMENT OF TRANSPORTATION

METAL BEAM GUARD RAILING TRANSITION RAILING (TYPE WB)

NO SCALE

RSP A77J4 DATED MAY 20, 2011 SUPERSEDES
RSP A77J4 DATED JUNE 5, 2009, RSP A77J4 DATED JUNE 6, 2008
AND STANDARD PLAN A77J4 DATED MAY 1, 2006 -
PAGE 75 OF THE STANDARD PLANS BOOK DATED MAY 2006.

REVISED STANDARD PLAN RSP A77J4

2006 REVISED STANDARD PLAN RSP A77J4

5-14-09

DIST	COUNTY	ROUTE	POST MILES TOTAL PROJECT	SHEET NO.	TOTAL SHEETS
03	Sac	12	0.3/6.1	43	57

REGISTERED CIVIL ENGINEER

September 1, 2006
PLANS APPROVAL DATE

Hector David Cordova No. C41957 Exp. 3-31-08 CIVIL — REGISTERED PROFESSIONAL ENGINEER — STATE OF CALIFORNIA

The State of California or its officers or agents shall not be responsible for the accuracy or completeness of electronic copies of this plan sheet.

To accompany plans dated 5-14-12

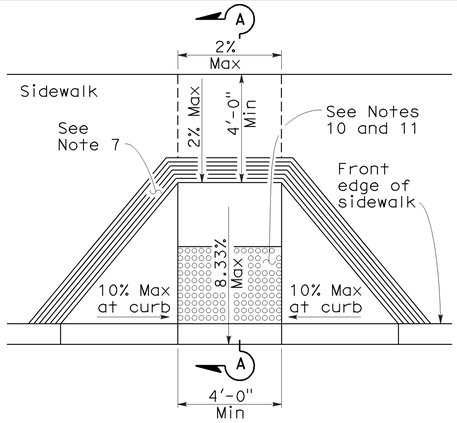

CASE A

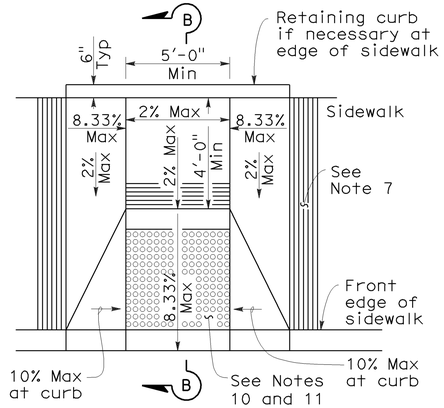

CASE B

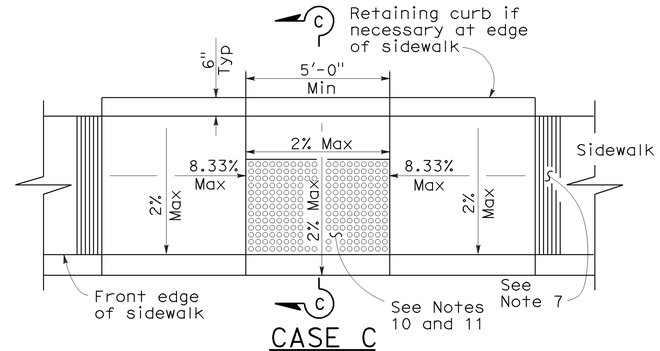

CASE C

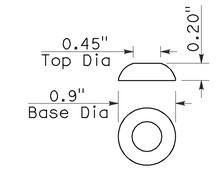

RAISED TRUNCATED DOME

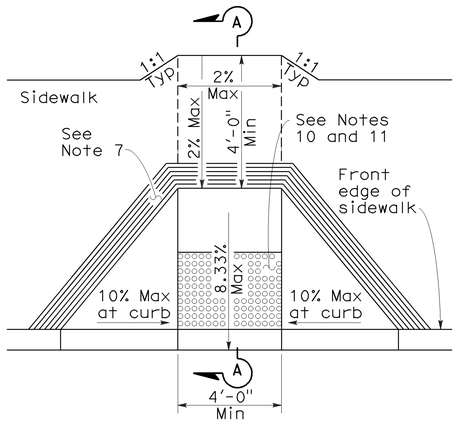

CASE D

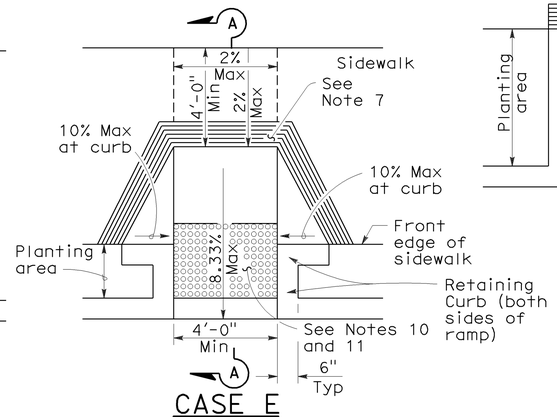

CASE E

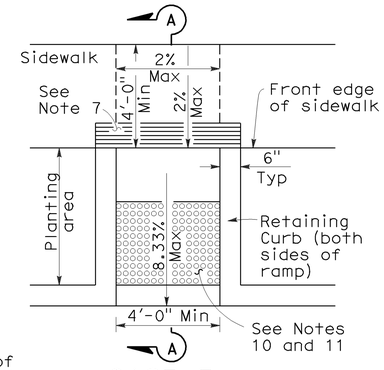

CASE F

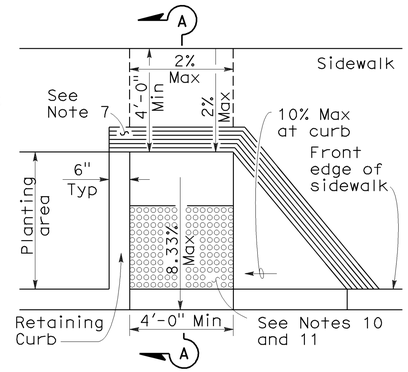

CASE G
See Note 4

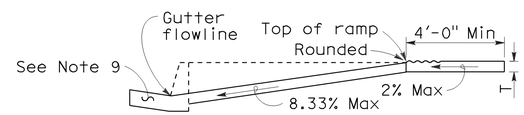

SECTION A-A

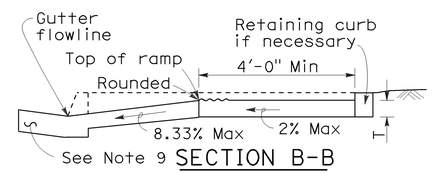

SECTION B-B
Depress entire sidewalk as required

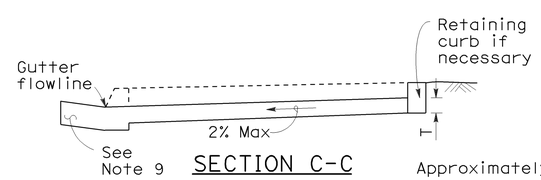

SECTION C-C

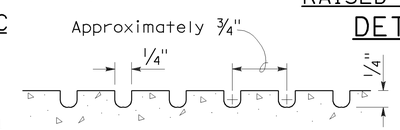

GROOVING DETAIL

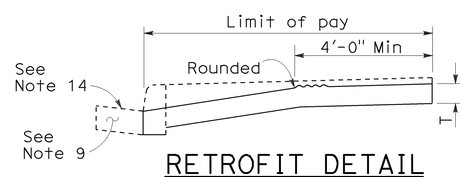

RETROFIT DETAIL
Existing curb and sidewalk

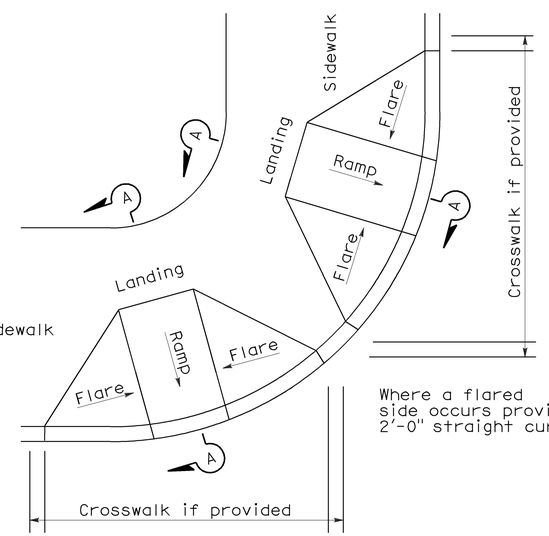

DETAIL A
TYPICAL TWO-RAMP CORNER INSTALLATION
See Note 1

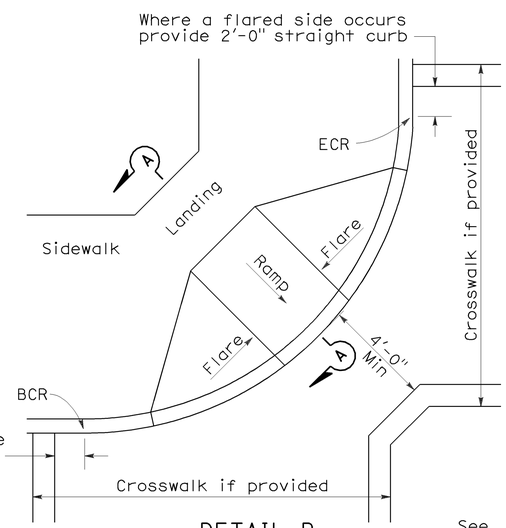

DETAIL B
TYPICAL ONE-RAMP CORNER INSTALLATION
See Notes 1 and 3

NOTES:

1. As site conditions dictate, Case A through Case G curb ramps may be used for corner installations similar to those shown in Detail A and Detail B. The case of curb ramps used in Detail A do not have to be the same. Case A through Case G curb ramps also may be used at mid block locations, as site conditions dictate.
2. If distance from curb to back of sidewalk is too short to accommodate ramp and 4'-0" platform (landing) as shown in Case A, the sidewalk may be depressed longitudinally as in Case B, or C or may be widened as in Case D.
3. When ramp is located in center of curb return, crosswalk configuration must be similar to that shown for Detail B.
4. As site conditions dictate, the retaining curb side and the flared side of the Case G ramp shall be constructed in reversed position.
5. If located on a curve, the sides of the ramp need not be parallel, but the minimum width of the ramp shall be 4'-0".
6. Side slope of ramp flares vary uniformly from a maximum of 10% at curb to conform with longitudinal sidewalk slope adjacent to top of the ramp, except in Case C and Case F.
7. The curb ramp shall be outlined, as shown, with a 1'-0" wide border with ¼" grooves approximately ¾" on center. See grooving detail.
8. Transitions from ramps and landing to walks, gutters or streets shall be flush and free of abrupt changes.
9. Maximum slopes of adjoining gutters, the road surface immediately adjacent to the curb ramp or accessible route shall not exceed 5 percent within 4'-0" of the top and bottom of the curb ramp.
10. Curb ramps shall have a detectable warning surface that extends the full width and 3'-0" depth of the ramp. Detectable Warning Surfaces shall conform to the details on this plan and the requirements in the Special Provisions.
11. The edge of the detectable warning surface nearest the street shall be between 6" and 8" from the gutter flowline.
12. Sidewalk and ramp thickness, "T", shall be 3½" minimum.
13. Utility pull boxes, manholes, vaults and all other utility facilities within the boundaries of the curb ramp will be relocated or adjusted to grade by the owner prior to, or in conjunction with, curb ramp construction.
14. For retrofit conditions, removal and replacement of curb apron will be at the Contractor's option, unless otherwise shown on project plans.

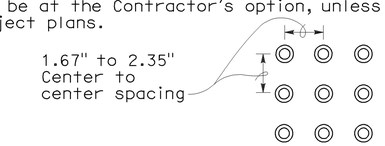

RAISED TRUNCATED DOME PATTERN (IN-LINE)
DETECTABLE WARNING SURFACE
See Note 10

STATE OF CALIFORNIA
DEPARTMENT OF TRANSPORTATION

CURB RAMP DETAILS

NO SCALE

RSP A88A DATED SEPTEMBER 1, 2006 SUPERSEDES STANDARD PLAN A88A DATED MAY 1, 2006 - PAGE 115 OF THE STANDARD PLANS BOOK DATED MAY 2006.

REVISED STANDARD PLAN RSP A88A

2006 REVISED STANDARD PLAN RSP A88A

8-3-06

DIST	COUNTY	ROUTE	POST MILES TOTAL PROJECT	SHEET No.	TOTAL SHEETS
03	Sac	12	0.3/6.1	44	57

REGISTERED CIVIL ENGINEER

January 20, 2012
PLANS APPROVAL DATE

REGISTERED PROFESSIONAL ENGINEER Cornelis M. Hakim No. C55610 Exp. 12-31-12 CIVIL STATE OF CALIFORNIA

The State of California or its officers or agents shall not be responsible for the accuracy or completeness of electronic copies of this plan sheet.

To accompany plans dated 5-14-12

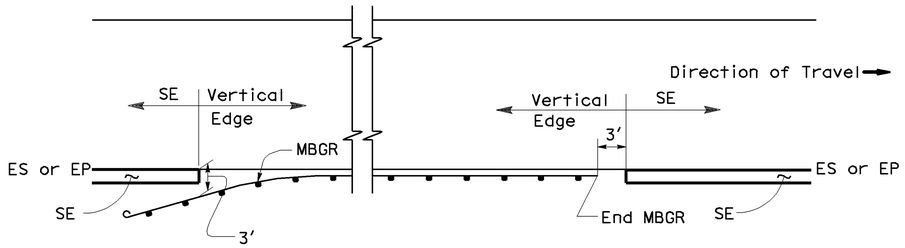

MBGR

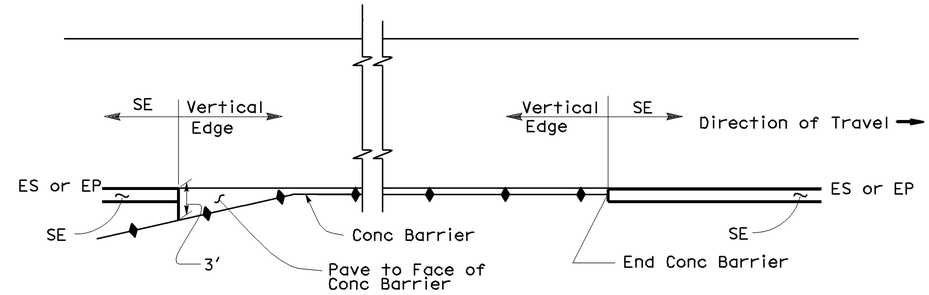

CONCRETE BARRIER

ABBREVIATIONS:

SE Safety Edge

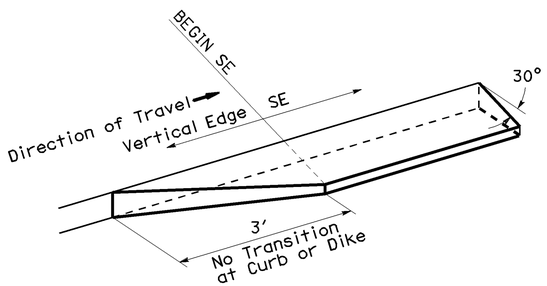

TRANSITION DETAIL FOR CONCRETE ONLY

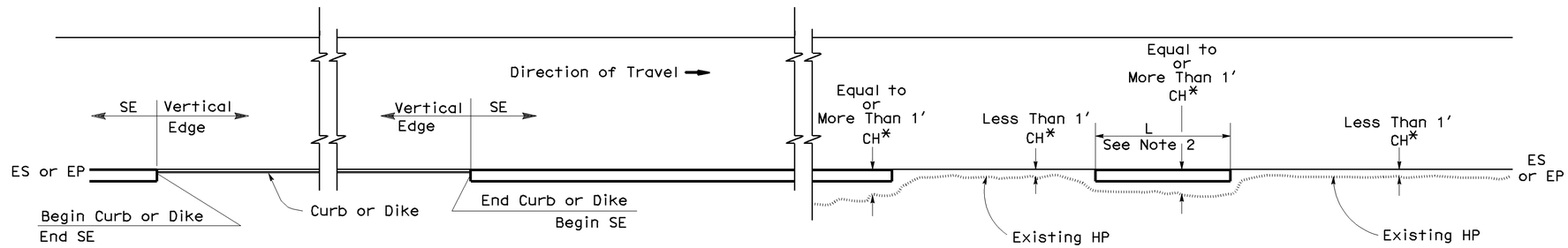

CURB OR DIKE

NARROW SIDE SLOPE

* CH = Distance from ES or EP to existing HP.

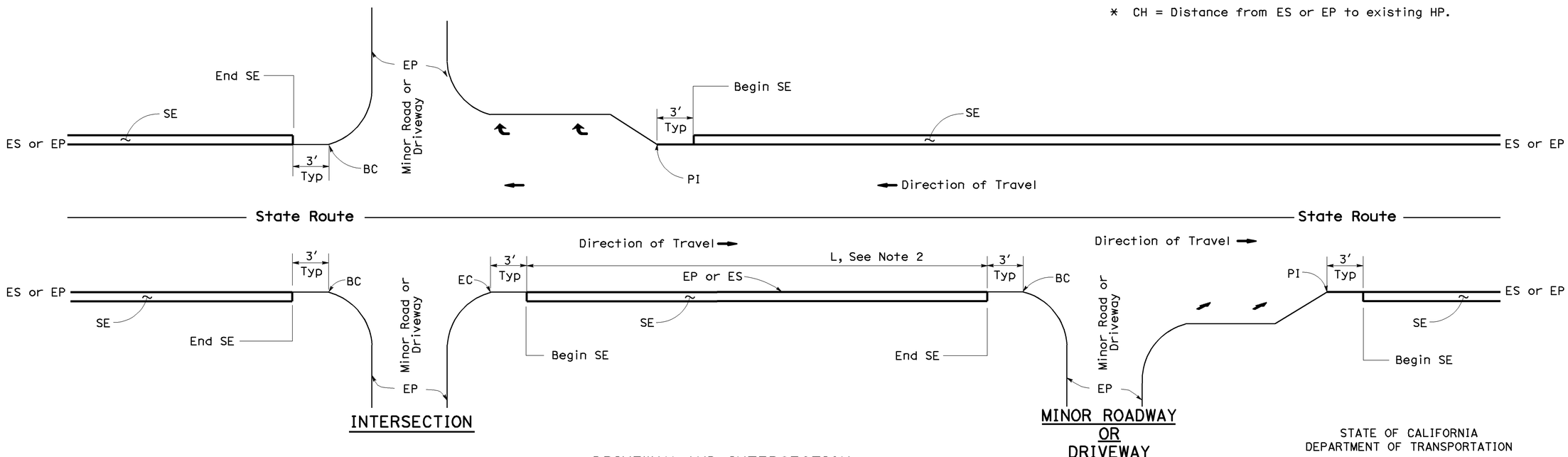

INTERSECTION

MINOR ROADWAY OR DRIVEWAY

DRIVEWAY AND INTERSECTION

NOTES:

1. For details not shown, see New Standard Plans NSP P75 and NSP P76.
2. Safety edge is optional when L is less than 30'.

STATE OF CALIFORNIA
DEPARTMENT OF TRANSPORTATION

PAVEMENT EDGE TREATMENTS

NO SCALE

NSP P74 DATED JANUARY 20, 2012 SUPPLEMENTS THE STANDARD PLANS BOOK DATED MAY 2006.

NEW STANDARD PLAN NSP P74

2006 NEW STANDARD PLAN NSP P74

01-05-12

DIST	COUNTY	ROUTE	POST MILES TOTAL PROJECT	SHEET No.	TOTAL SHEETS
03	Sac	12	0.3/6.1	45	57

REGISTERED CIVIL ENGINEER

January 20, 2012
PLANS APPROVAL DATE

REGISTERED PROFESSIONAL ENGINEER Cornelis M. Hakim No. C55610 Exp. 12-31-12 CIVIL STATE OF CALIFORNIA

The State of California or its officers or agents shall not be responsible for the accuracy or completeness of electronic copies of this plan sheet.

To accompany plans dated 5-14-12

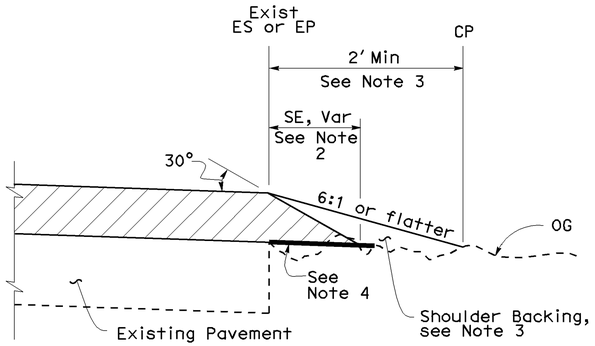

CASE A
Safety Edge

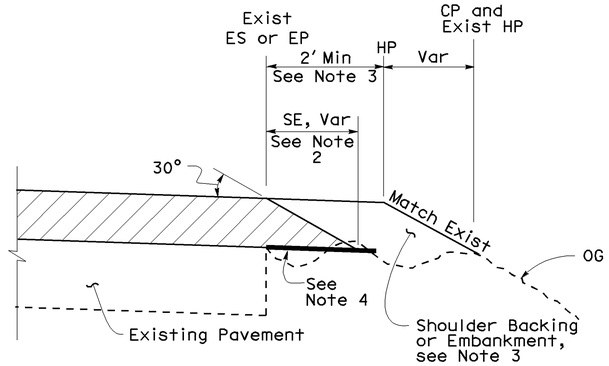

CASE B
Safety Edge

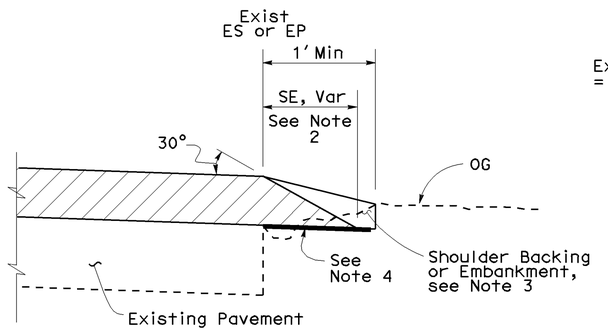

CASE C
Safety Edge

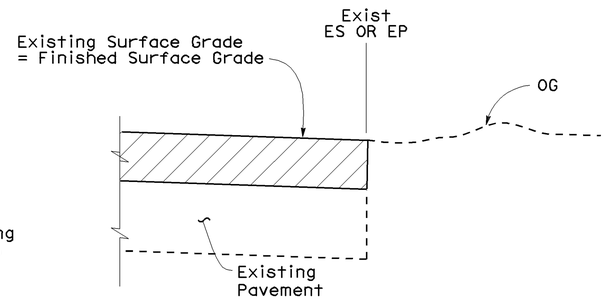

CASE D
Vertical Edge

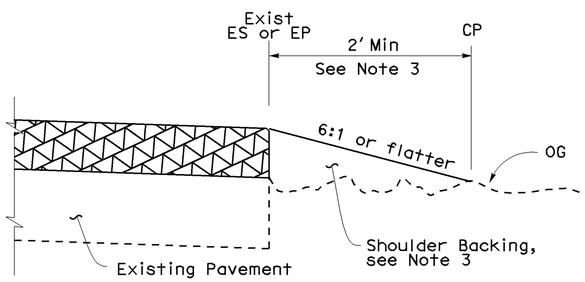

CASE E
Vertical Edge

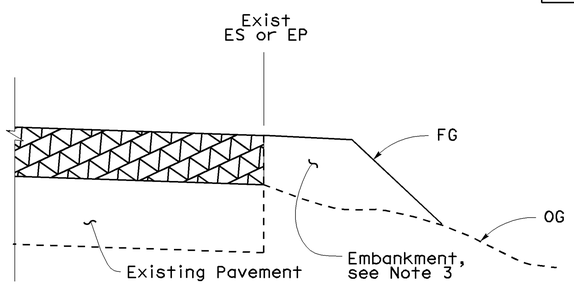

CASE F
Vertical Edge
* See Table A and New Std Plan NSP P74

LEGEND:

- HMA Overlay
- HMA or Concrete Overlay
- Concrete Overlay

ABBREVIATIONS:

SE	Safety Edge
TT	Total Thickness of SE

TABLE A
EDGE TREATMENT FOR VARIOUS OVERLAY THICKNESS AND CONDITIONS

	OVERLAY THICKNESS	
FIELD CONDITION	Less Than 0.15'	0.15' or More
Exist Slope 6:1 or Flatter	Case E	Case A
Exist Slope 3:1 to 6:1	Case E	Case B
Exist Slope Steeper Than 3:1	Case F	Case F
Cut Section (Replace, Cold Plane, Mill Pavement)	Case D	Case C

ADDITIONAL HMA OR CONCRETE QUANTITIES FOR SE/SIDE/MILE

TYPICAL CROSS SECTION	TT	TOTAL ADDITIONAL MATERIAL FOR SE/SIDE/MILE		
		HMA (TON)	CONCRETE (CY)*	CONCRETE (CY)**
TT	0.15'	NA	NA	NA
	0.20'	13.7	NA	NA
	0.30'	30.9	NA	NA
	0.40'	54.9	NA	NA
	0.45'	69.4	NA	NA
TT 0.43'	0.50'	84.2	NA	NA
	0.60'	113.9	NA	NA
	0.70'	143.6	70.9	94.2
	0.80'	173.3	85.6	112.2
	0.90'	203.0	100.3	130.2
	1.00'	232.7	114.9	148.2
	1.10'	262.4	129.6	166.2
	1.20'	292.1	144.3	184.2

* For Detail "A"
** For Optional Detail "A"

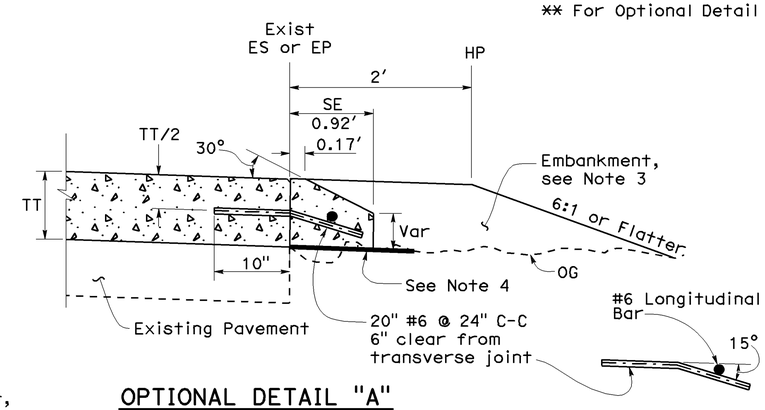

OPTIONAL DETAIL "A"
For concrete overlay
See Note 5

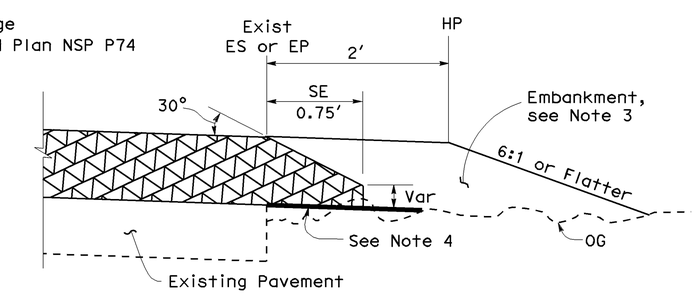

DETAIL "A"
For HMA overlay thickness more than 0.43' or concrete overlay

NOTES:

1. For limits of safety edge and vertical edge treatments, see New Standard Plan NSP P74.
2. Details shown for HMA overlay thickness less than 0.43'. See Detail "A" for HMA overlay thickness more than 0.43' or concrete overlay.
3. For locations and limits of shoulder backing or embankment see project plans.
4. Grade existing ground to place safety edge. 1' minimum width.
5. Safety edge transverse joint must match overlay transverse joint. End of #6 longitudinal bar must be 2" ±½" clear from transverse joint.
6. Safety edge is not needed in the area of MBGR, barrier, right turn lane and acceleration lane. See New Standard Plan NSP P74.

STATE OF CALIFORNIA
DEPARTMENT OF TRANSPORTATION

PAVEMENT EDGE TREATMENTS-OVERLAYS

NO SCALE

NSP P75 DATED JANUARY 20, 2012 SUPPLEMENTS THE STANDARD PLANS BOOK DATED MAY 2006.

NEW STANDARD PLAN NSP P75

2006 NEW STANDARD PLAN NSP P75

01-05-12

DIST	COUNTY	ROUTE	POST MILES TOTAL PROJECT	SHEET NO.	TOTAL SHEETS
03	Sac	12	0.3/6.1	46	57

Randell D. Hiatt
REGISTERED CIVIL ENGINEER

June 6, 2008
PLANS APPROVAL DATE

REGISTERED PROFESSIONAL ENGINEER
Randell D. Hiatt
No. C50200
Exp. 6-30-09
CIVIL
STATE OF CALIFORNIA

The State of California or its officers or agents shall not be responsible for the accuracy or completeness of electronic copies of this plan sheet.

To accompany plans dated 5-14-12

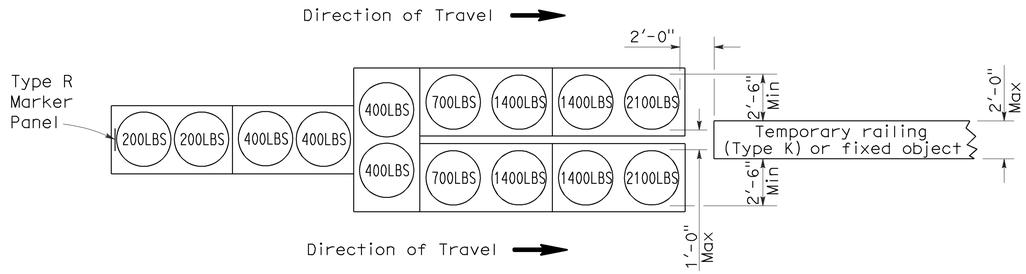

ARRAY 'TU14'

Approach speed 45 mph or more

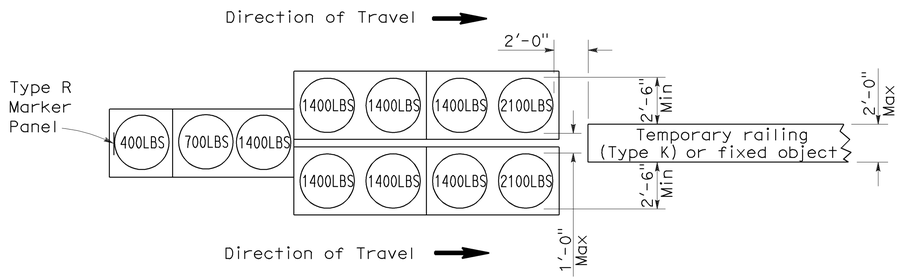

ARRAY 'TU11'

Approach speed less than 45 mph

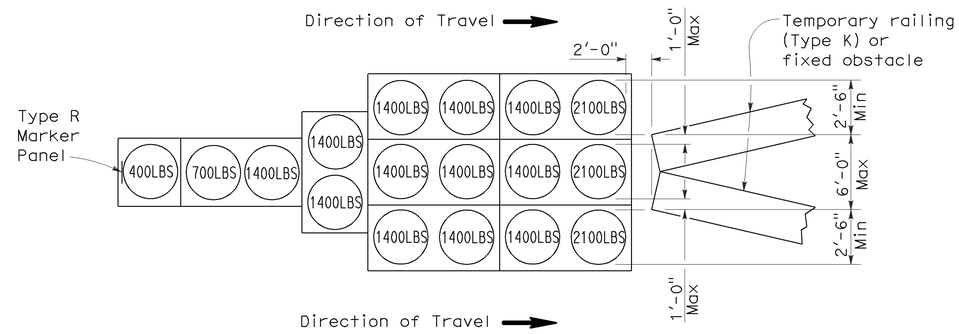

ARRAY 'TU17'

Approach speed less than 45 mph

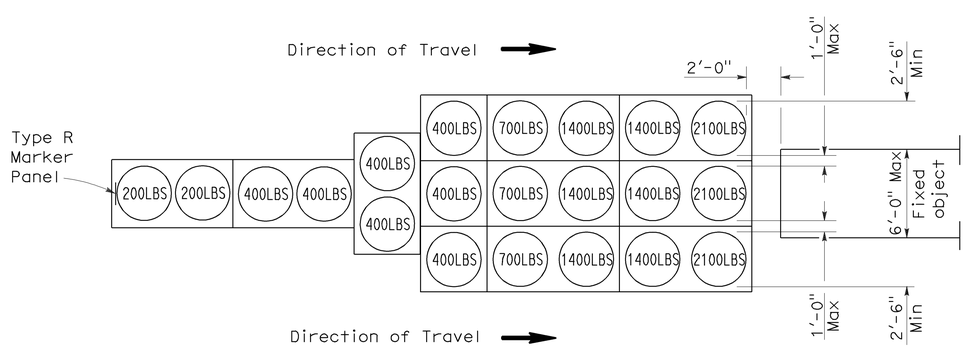

ARRAY 'TU21'

Approach speed 45 mph or more

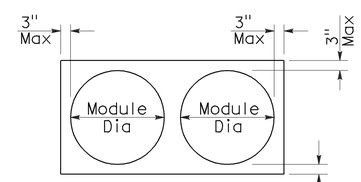

PLAN

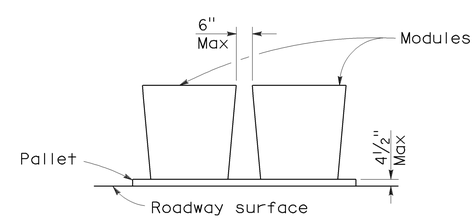

ELEVATION

CRASH CUSHION PALLET DETAIL

See Note 7

NOTES:

1. (XXX) Indicates sand filled module location and weight of sand in pounds for each module. Module spacing is based on the greater diameter of the module.
2. All sand weights are nominal.
3. Temporary crash cushion arrays shall not encroach on the traveled way.
4. Place the top of Type R marker panel 1" below the module lid.
5. Refer to Standard Plan A73B for marker details.
6. Approach speeds indicated conform to NCHRP 350 Report criteria.
7. Use of pallets is optional.

STATE OF CALIFORNIA
DEPARTMENT OF TRANSPORTATION

TEMPORARY CRASH CUSHION, SAND FILLED (UNIDIRECTIONAL)

NO SCALE

RSP T1A DATED JUNE 6, 2008 SUPERSEDES STANDARD PLAN T1A
DATED MAY 1, 2006 - PAGE 211 OF THE STANDARD PLANS BOOK DATED MAY 2006.

REVISED STANDARD PLAN RSP T1A

2006 REVISED STANDARD PLAN RSP T1A

DIST	COUNTY	ROUTE	POST MILES TOTAL PROJECT	SHEET NO.	TOTAL SHEETS
03	Sac	12	0.3/6.1	47	57

Randell D. Hiatt
REGISTERED CIVIL ENGINEER

June 6, 2008
PLANS APPROVAL DATE

REGISTERED PROFESSIONAL ENGINEER
Randell D. Hiatt
No. C50200
Exp. 6-30-09
CIVIL
STATE OF CALIFORNIA

The State of California or its officers or agents shall not be responsible for the accuracy or completeness of electronic copies of this plan sheet.

To accompany plans dated 5-14-12

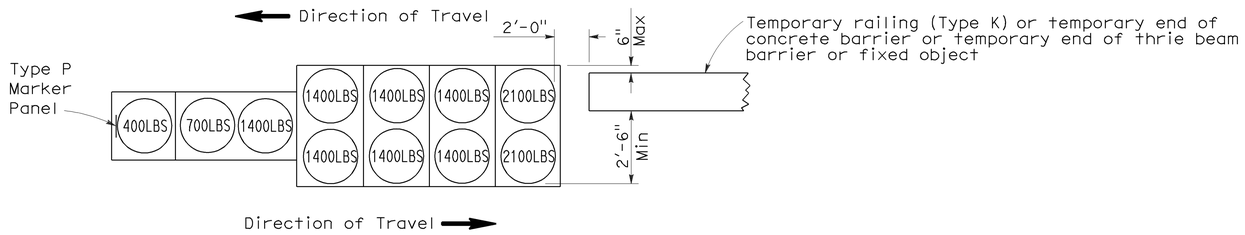

ARRAY 'TB11'

Approach speed less than 45 mph

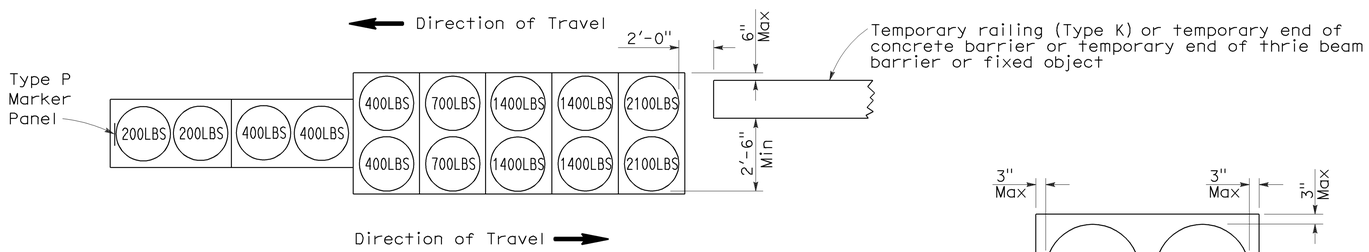

ARRAY 'TB14'

Approach speed 45 mph or more

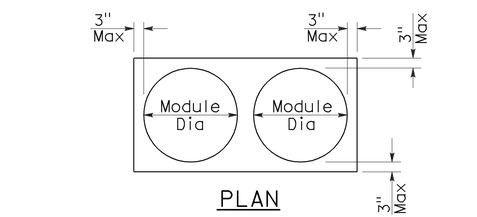

PLAN

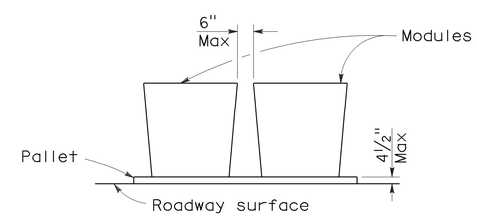

ELEVATION

CRASH CUSHION PALLET DETAIL

See Note 7

NOTES:

1. (XXX) Indicates sand filled module location and weight of sand in pounds for each module. Module spacing is based on the greater diameter of the module.
2. All sand weights are nominal.
3. Temporary crash cushion arrays shall not encroach on the traveled way.
4. Place the Type P marker panel so that the bottom of the panel rests upon the pallet.
5. Refer to Standard Plan A73B for marker details.
6. Approach speeds indicated conform to NCHRP 350 Report criteria.
7. Use of pallets is optional.

STATE OF CALIFORNIA
DEPARTMENT OF TRANSPORTATION

TEMPORARY CRASH CUSHION, SAND FILLED (BIDIRECTIONAL)

NO SCALE

RSP T1B DATED JUNE 6, 2008 SUPERSEDES STANDARD PLAN T1B
DATED MAY 1, 2006 - PAGE 212 OF THE STANDARD PLANS BOOK DATED MAY 2006.

REVISED STANDARD PLAN RSP T1B

2006 REVISED STANDARD PLAN RSP T1B

5-15-08

DIST	COUNTY	ROUTE	POST MILES TOTAL PROJECT	SHEET NO.	TOTAL SHEETS
03	Sac	12	0.3/6.1	48	57

Randell D. Hiatt
REGISTERED CIVIL ENGINEER

June 6, 2008
PLANS APPROVAL DATE

REGISTERED PROFESSIONAL ENGINEER
Randell D. Hiatt
No. C50200
Exp. 6-30-09
CIVIL
STATE OF CALIFORNIA

The State of California or its officers or agents shall not be responsible for the accuracy or completeness of electronic copies of this plan sheet.

To accompany plans dated 5-14-12

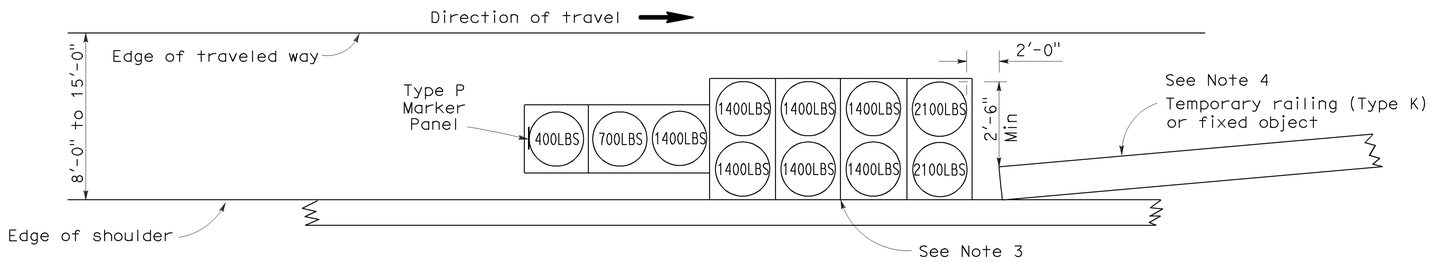

ARRAY 'TS11'

Approach speed less than 45 mph
See Note 9

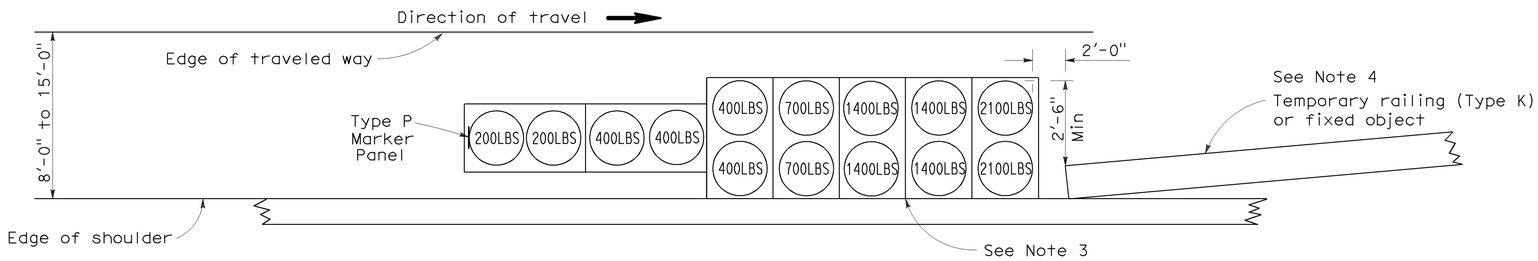

ARRAY 'TS14'

Approach speed 45 mph or more
See Note 9

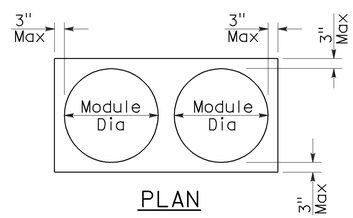

PLAN

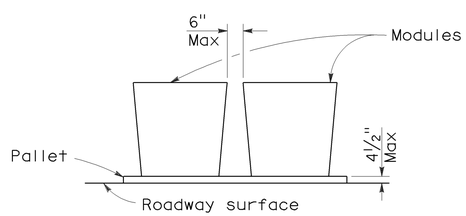

ELEVATION

CRASH CUSHION PALLET DETAIL

See Note 11

NOTES:

1. (XXX) Indicates sand filled module location and weight of sand in pounds for each module. Module spacing is based on the greater diameter of the module.
2. All sand weights are nominal.
3. The temporary crash cushion arrays shown on this plan shall be used only in locations where there will be traffic on one side of the temporary crash cushion array.
4. If the fixed object or approach end of the temporary railing is less than 15'-0" from the edge of traveled way, a temporary crash cushion is required in a construction or work zone.
5. Temporary crash cushion arrays shall not encroach on the traveled way.
6. Arrays for median shoulders shall conform to details shown on this plan for outside shoulders.
7. Place the Type P marker panel so that the bottom of the panel rests upon the pallet and faces traffic.
8. Refer to Standard Plan A73B for marker details.
9. For shoulder widths less than 8'-0", appropriate approved crash cushion protection, other than sand filled modules, shall be provided at fixed objects and at approach ends of temporary railing. The specific type of crash cushion shall be as shown on the project plans or as specified in the Special Provisions, or if not shown on the project plans or specified in the Special Provisions, shall be as approved by the Engineer.
10. Approach speeds indicated conform to NCHRP 350 Report criteria.
11. Use of pallets is optional.

STATE OF CALIFORNIA
DEPARTMENT OF TRANSPORTATION

TEMPORARY CRASH CUSHION, SAND FILLED (SHOULDER INSTALLATIONS)

NO SCALE

RSP T2 DATED JUNE 6, 2008 SUPERSEDES STANDARD PLAN T2
DATED MAY 1, 2006 - PAGE 213 OF THE STANDARD PLANS BOOK DATED MAY 2006.

REVISED STANDARD PLAN RSP T2

2006 REVISED STANDARD PLAN RSP T2

5-15-08

Dist	COUNTY	ROUTE	POST MILES TOTAL PROJECT	SHEET No.	TOTAL SHEETS
03	Sac	12	0.3/6.1	49	57

Randell D. Hiatt
REGISTERED CIVIL ENGINEER

May 20, 2011
PLANS APPROVAL DATE

REGISTERED PROFESSIONAL ENGINEER
Randell D. Hiatt
No. C50200
Exp. 6-30-11
CIVIL
STATE OF CALIFORNIA

The State of California or its officers or agents shall not be responsible for the accuracy or completeness of electronic copies of this plan sheet.

To accompany plans dated 5-14-12

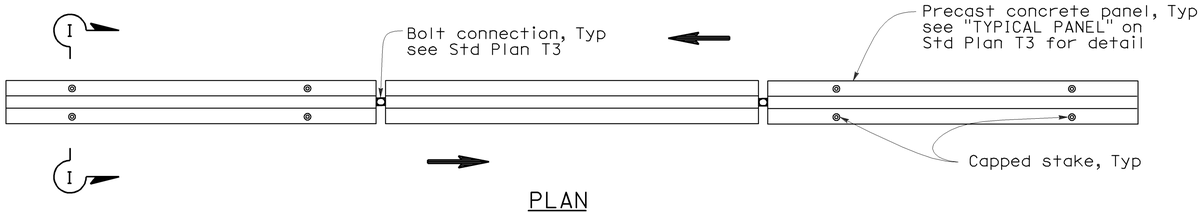

PLAN

RAILING STAKING CONFIGURATION FOR TWO-WAY TRAFFIC

See Note 1

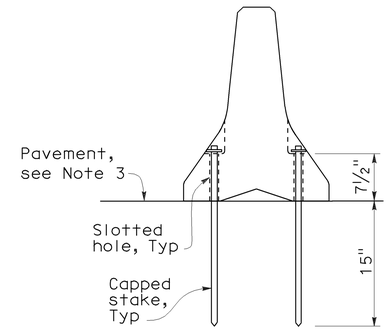

SECTION I-I

NOTES:

1. Where Type K Temporary Railing is placed as a temporary or long term barrier in two-way traffic on highways with less than 24" from the edge of traveled way, use four capped stakes per every other panel with end panels staked.
2. Where Type K Temporary Railing is placed 3" to 24" from the edge of an excavation on highways, use two capped stakes per panel along the traffic side.
3. Staked Type K Temporary Railing must be supported by at least 4" thick concrete, hot mix asphalt or existing asphalt concrete pavement.
4. The minimum yield strength for the washer must be 60,000 psi.
5. Direction of adjacent traffic indicated by ⟹.

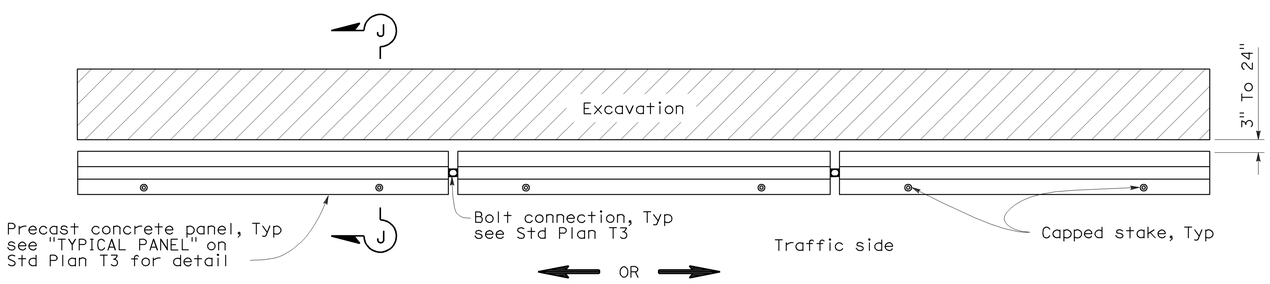

PLAN

RAILING STAKING CONFIGURATION ADJACENT TO AN EXCAVATION

See Note 2

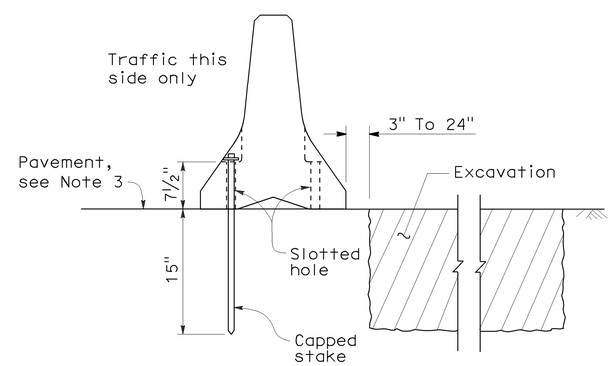

SECTION J-J

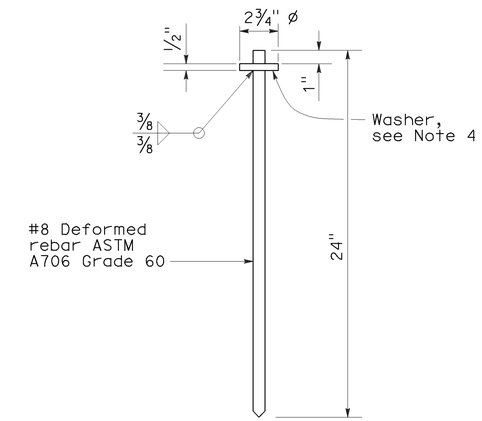

CAPPED STAKE DETAIL

STATE OF CALIFORNIA
DEPARTMENT OF TRANSPORTATION

TEMPORARY RAILING (TYPE K)

NO SCALE

NSP T3A DATED MAY 20, 2011 SUPPLEMENTS
THE STANDARD PLANS BOOK DATED MAY 2006.

NEW STANDARD PLAN NSP T3A

2006 NEW STANDARD PLAN NSP T3A

DIST	COUNTY	ROUTE	POST MILES TOTAL PROJECT	SHEET NO.	TOTAL SHEETS
03	Sac	12	0.3/6.1	50	57

REGISTERED CIVIL ENGINEER

November 17, 2006
PLANS APPROVAL DATE

REGISTERED PROFESSIONAL ENGINEER
Greg W. Edwards
No. C36386
Exp. 6-30-08
CIVIL
STATE OF CALIFORNIA

The State of California or its officers or agents shall not be responsible for the accuracy or completeness of electronic copies of this plan sheet.

To accompany plans dated 5-14-12

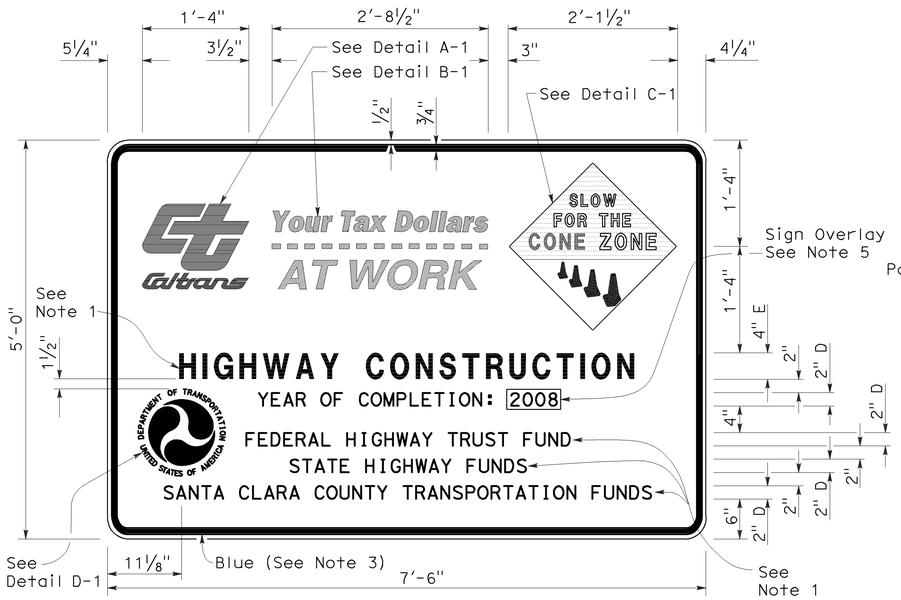

TYPE 1

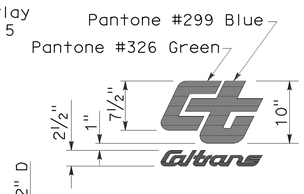

DETAIL A-1

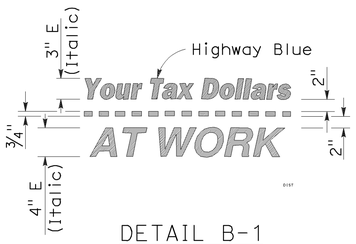

DETAIL B-1
(See Note 3)

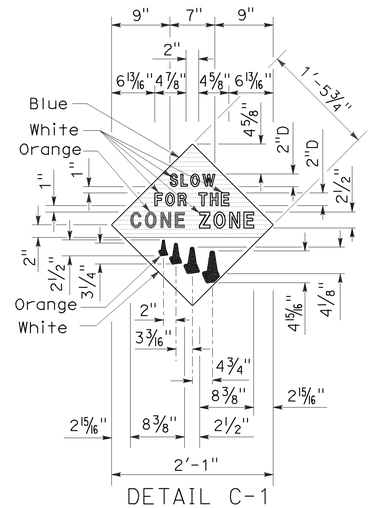

DETAIL C-1
(See Note 4)

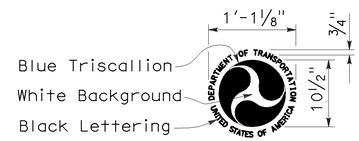

DETAIL D-1
(See Note 6)

NOTES:

1. The sign messages shown for type of project and fund types are examples only. See the Special Provisions for the applicable type of project and fund type messages to be used.
2. Except as otherwise shown, the legend of sign shall be black on a white background (non-reflective).
3. The border of the signs and details "B-1" and "B-2" shall be blue (non-reflective).
4. The diamond in details "C-1" and "C-2" shall be blue for the background of message, " SLOW FOR THE CONE ZONE", and white background for the orange cones. The color and type of font for the "SLOW FOR THE CONE ZONE" message shall be: "SLOW" white D; "FOR THE" white D; "CONE" orange Arial font; "ZONE" white Arial font.
5. Year of completion of project construction shown on the overlay is an example only. See the Special Provisions.
6. Use when the Project involves Federal Highway Trust Fund.

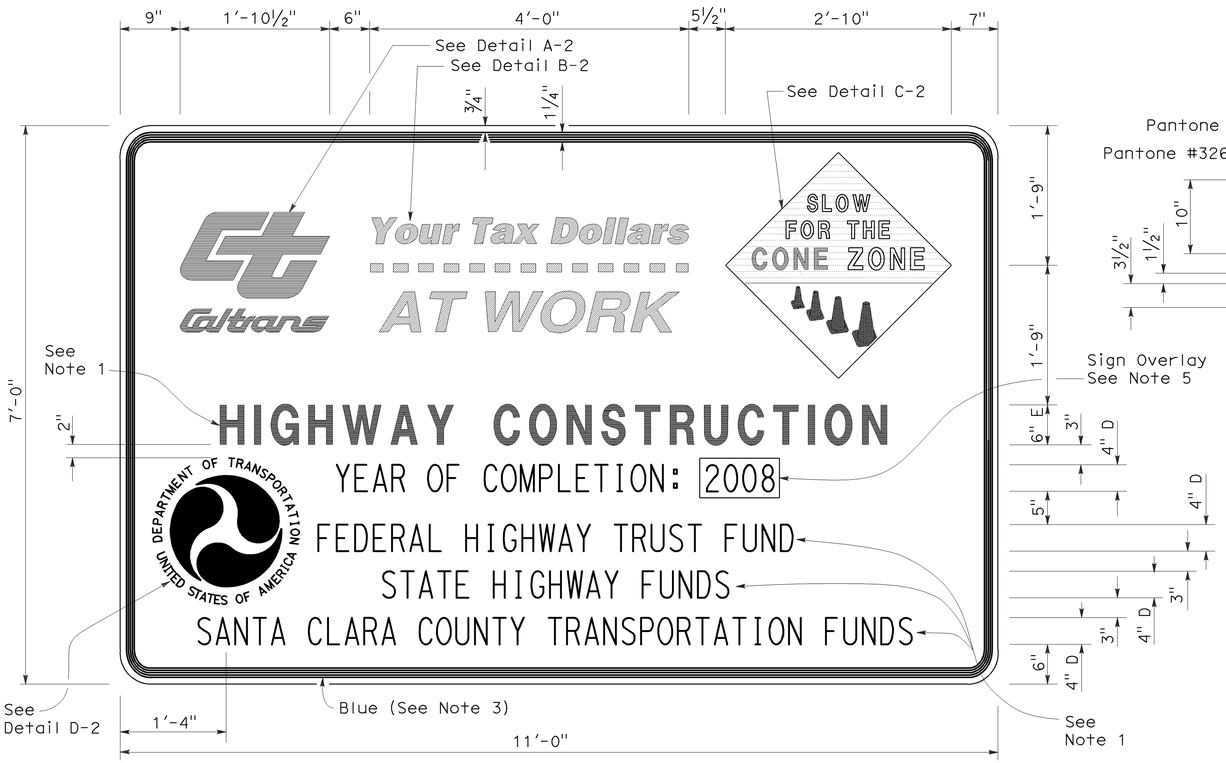

TYPE 2

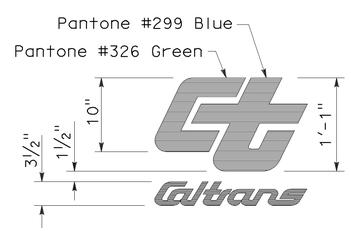

DETAIL A-2

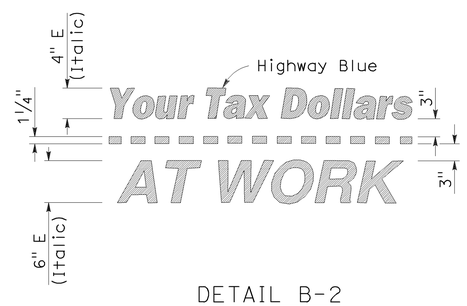

DETAIL B-2
(See Note 3)

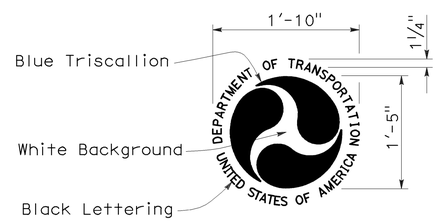

DETAIL D-2
(See Note 6)

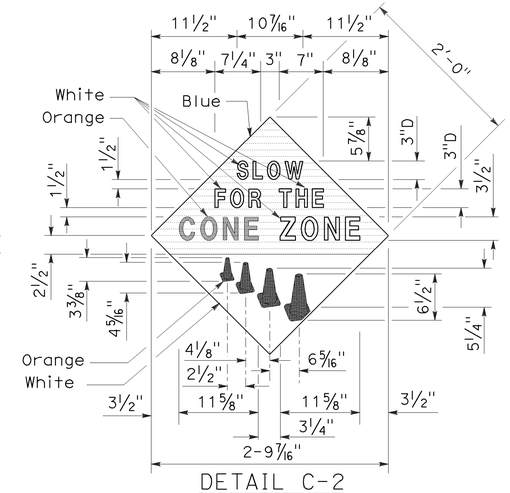

DETAIL C-2
(See Note 4)

STATE OF CALIFORNIA
DEPARTMENT OF TRANSPORTATION

CONSTRUCTION PROJECT FUNDING IDENTIFICATION SIGNS

NO SCALE

RSP T7 DATED NOVEMBER 17, 2006 SUPERSEDES STANDARD PLAN T7
DATED MAY 1, 2006 - PAGE 217 OF THE STANDARD PLANS BOOK DATED MAY 2006.

REVISED STANDARD PLAN RSP T7

2006 REVISED STANDARD PLAN RSP T7

9-7-06

DIST	COUNTY	ROUTE	POST MILES TOTAL PROJECT	SHEET NO.	TOTAL SHEETS
03	Sac	12	0.3/6.1	51	57

LICENSED LANDSCAPE ARCHITECT

April 3, 2009
PLANS APPROVAL DATE

The State of California or its officers or agents shall not be responsible for the accuracy or completeness of electronic copies of this plan sheet.

LICENSED LANDSCAPE ARCHITECT — Robert B. Schott — 3635 — Registration — 11-30-10 Renewal date — 2-25-09 Date — STATE OF CALIFORNIA

To accompany plans dated 5-14-12

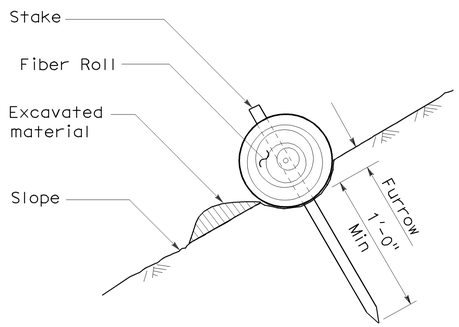

SECTION

TEMPORARY FIBER ROLL (TYPE 1)

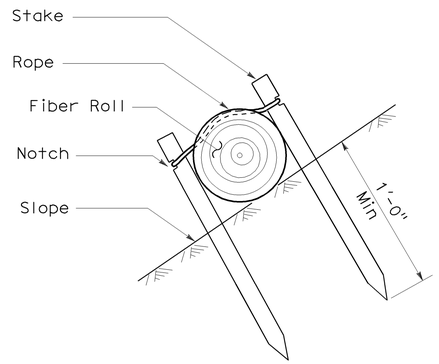

SECTION

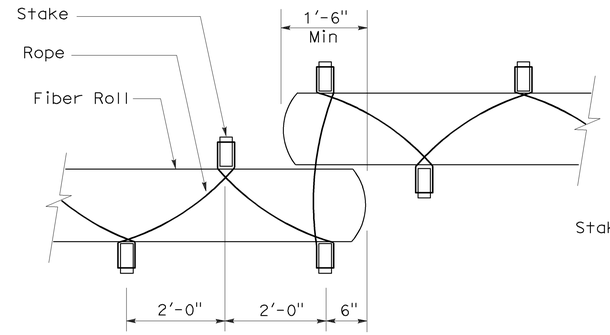

PLAN

TEMPORARY FIBER ROLL (TYPE 2)

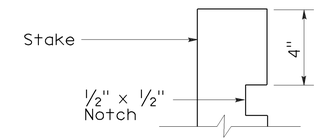

ELEVATION

STAKE NOTCH DETAIL

NOTES:

1. Temporary fiber roll spacing varies depending upon slope inclination.
2. Installations shown in the perspectives are for slope inclination of 10:1 and steeper.

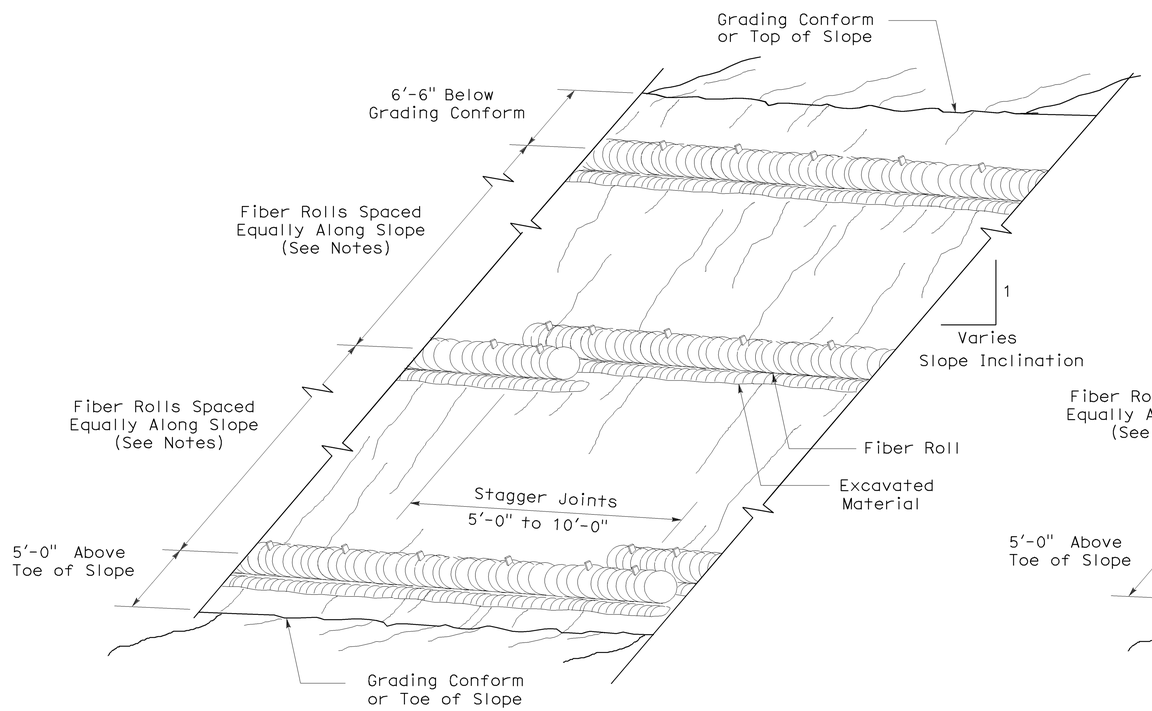

PERSPECTIVE

TEMPORARY FIBER ROLL (TYPE 1)

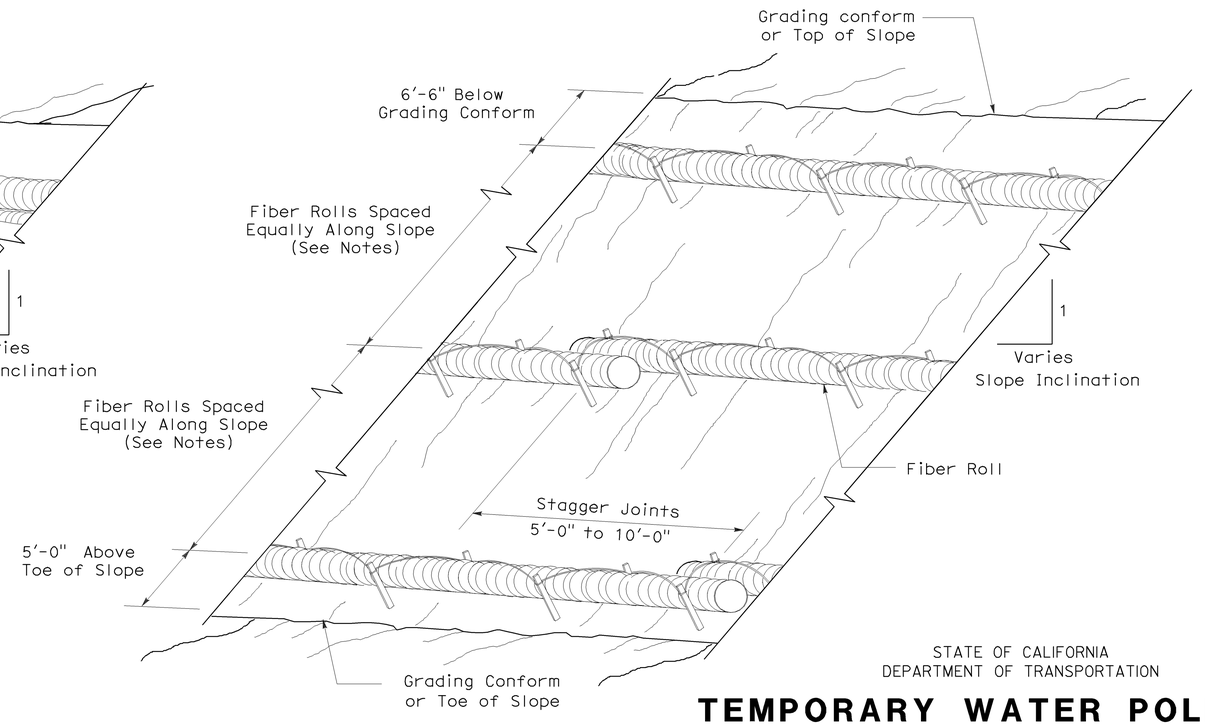

PERSPECTIVE

TEMPORARY FIBER ROLL (TYPE 2)

STATE OF CALIFORNIA
DEPARTMENT OF TRANSPORTATION

TEMPORARY WATER POLLUTION CONTROL DETAILS (TEMPORARY FIBER ROLL)

NO SCALE

RSP T56 DATED APRIL 3, 2009 SUPERSEDES STANDARD PLAN T56
DATED MAY 1, 2006 - PAGE 232 OF THE STANDARD PLANS BOOK DATED MAY 2006.

REVISED STANDARD PLAN RSP T56

2006 REVISED STANDARD PLAN RSP T56

2-23-09

DIST	COUNTY	ROUTE	POST MILES TOTAL PROJECT	SHEET NO.	TOTAL SHEETS
03	Sac	12	0.3/6.1	52	57

REGISTERED ELECTRICAL ENGINEER

October 5, 2007
PLANS APPROVAL DATE

REGISTERED PROFESSIONAL ENGINEER
Jeffery G. McRae
No. E14512
Exp. 6-30-08
ELECTRICAL
STATE OF CALIFORNIA

The State of California or its officers or agents shall not be responsible for the accuracy or completeness of electronic copies of this plan sheet.

To accompany plans dated 5-14-12

ELECTROLIERS

STANDARD TYPES
15, 15D
15 STRUCTURE
21, 21D STRUCTURE
30
31
32
35
36-20A

High mast light pole

Double Arm lighting standard

Existing electrolier

Electrolier foundation (Future installation)

NOTES:

1. Luminaires shall be 310 W HPS when installed on Type 21, 21D, 30, 31, 32, 35 and 36-20A Standards, unless otherwise specified. Luminaires shall be 200 W HPS when installed on other type standards or poles, unless otherwise specified.
2. Luminaires shall be the cutoff type, ANSI Type Ⅲ medium cutoff lighting distribution, unless otherwise specified.
3. Variations noted adjacent to symbol on project plans.

Electrolier (see project notes or project plans)

Luminaire on wood pole

STANDARD NOTES:

- AB — Abandon. If applied to conduit, remove conductors.
- BC — Install pull box in existing conduit run.
- BP — Pedestrian barricade, type as indicated on plan.
- CB — Install conduit into existing pull box.
- CC — Connect new and existing conduit. Remove existing conductors and install conductors as indicated.
- CF — Conduit to remain for future use. Remove conductors. Install pull wire or rope.
- DH — Detector handhole.
- FA — Foundation to be abandoned.
- IS — Install sign on signal mast arm.
- NS — No slip base on standard.
- PEC — Photoelectric control.
- PEU — Photoelectric unit.
- RC — Equipment or material to be removed and become the property of the Contractor.
- RE — Remove electrolier, fuses and ballast. Tape ends of conductors.
- RL — Relocate equipment.
- RR — Remove and reuse equipment.
- RS — Remove and salvage equipment.
- SC — Splice new to existing conductors.
- SD — Service disconnect.
- SF — Standard to remain for future use. Remove luminaire, pole conductors, fuses and ballast.
- TSP — Telephone service point.

ABBREVIATIONS AND EQUIPMENT DESIGNATIONS

PROPOSED	EXISTING	
BBS	bbs	Battery backup system
BC	bc	Bolt circle
C	C	Conduit
CCTV	cctv	Closed circuit television
CKT	ckt	Circuit
CMS	cms	Changeable message sign
DLC	dlc	Loop detector lead-in cable
EMS	ems	Extinguishable message sign
EVC	evc	Emergency vehicle cable
EVD	evd	Emergency vehicle detector
FB	fb	Flashing beacon
FBCA	fbca	Flashing beacon control assembly
FBS	fbs	Flashing beacon with slip base
FO	fo	Fiber optic
G	G	Ground (Equipment Grounding Conductor)
GFCI	GFCI	Ground fault circuit interrupt
HAR	har	Highway advisory radio
HEX	hex	Hexagonal
HPS	hps	High pressure sodium
IISNS	iisns	Internally illuminated street name sign
ISL	isl	Induction sign lighting
LED	led	Light emitting diode
LMA	lma	Luminaire mast arm
LPS	lps	Low pressure sodium
LTG	ltg	Lighting
LUM	lum	Luminaire
MAT	mat	Mast arm mounting vehicle signal faces, top attachment
MAS	mas	Mast arm mounting vehicle signal faces, side attachment
MAS-4A	mas-4A	Mast arm mounting vehicle signal faces, side attachment - 4 signal section
MAS-4B	mas-4B	
MAS-4C	mas-4C	
MAS-5A	mas-5A	Mast arm mounting vehicle signal faces, side attachment - 5 signal section
MAS-5B	mas-5B	
MC	mc	Mercury contactor
M/M	m/m	Multiple to multiple transformer
MT	mt	Conduit with pull wire or rope only
MTG	mtg	Mounting
	mv	Mercury vapor lighting fixture
N	N	Neutral (Grounded Conductor)
NC	NC	Normally closed
NO	NO	Normally open
PB	pb	Pull box
PEC	pec	Photoelectric control (Type Ⅰ, Ⅱ, Ⅲ, Ⅳ or Ⅴ as shown)
PED	ped	Pedestrian
PEU	peu	Photoelectric unit
PPB	ppb	Pedestrian push button
RL		Relocated equipment
RM	rm	Ramp metering
SB	sb	Slip base
SIC	sic	Signal interconnect cable
SIG	sig	Signal
SMA	sma	Signal mast arm
SNS	sns	Street name sign
SP	sp	Service point
TDC	tdc	Telephone demarcation cabinet
TMS	tms	Traffic monitoring station
TOS	tos	Traffic Operations System
VEH	veh	Vehicle
XFMR	xfmr	Transformer
COMM	comm	Communication
RWIS	rwis	Roadway weather information system

SOFFIT AND WALL MOUNTED LUMINAIRES

Pendant, 70 W HPS unless otherwise specified.

Flush, 70 W HPS unless otherwise specified.

Wall surface, 70 W HPS unless otherwise specified.

Existing soffit or wall luminaire to remain unmodified.

Existing soffit or wall luminaire to be modified as specified.

NOTE:

Arrow indicates "street side" of luminaire.

STATE OF CALIFORNIA
DEPARTMENT OF TRANSPORTATION

ELECTRICAL SYSTEMS (SYMBOLS AND ABBREVIATIONS)

NO SCALE

RSP ES-1A DATED OCTOBER 5, 2007 SUPERSEDES STANDARD PLAN ES-1A DATED MAY 1, 2006 - PAGE 400 OF THE STANDARD PLANS BOOK DATED MAY 2006.

REVISED STANDARD PLAN RSP ES-1A

2006 REVISED STANDARD PLAN RSP ES-1A

DIST	COUNTY	ROUTE	POST MILES TOTAL PROJECT	SHEET NO.	TOTAL SHEETS
03	Sac	12	0.3/6.1	53	57

REGISTERED ELECTRICAL ENGINEER

October 5, 2007
PLANS APPROVAL DATE

REGISTERED PROFESSIONAL ENGINEER
Jeffery G. McRae
No. E14512
Exp. 6-30-08
ELECTRICAL
STATE OF CALIFORNIA

The State of California or its officers or agents shall not be responsible for the accuracy or completeness of electronic copies of this plan sheet.

To accompany plans dated 5-14-12

CONDUIT

PROPOSED	EXISTING	
		Lighting Conduit, unless otherwise indicated or noted
		Traffic signal conduit
C	c	Communication conduit
T	t	Telephone conduit
F	f	Fire alarm conduit
FO	fo	Fiber optic conduit
		Conduit termination (RSP ES-9A C)
R	r	Conduit riser in/on structure or service pole

SERVICE EQUIPMENT

PROPOSED	EXISTING	
OH	oh	Overhead lines
U	U	Wood pole "U" indicates utility owned
		Pole guy with anchor
		Utility transformer - ground mounted
III		Service equipment enclosure type
		Service equipment enclosure door indicates front of enclosure
T	t	Telephone demarcation cabinet

POLE-MOUNTED SERVICE DESIGNATION

Type of installation

TYPE H SERVICE - 28'-10" ← Pole height above grade

ILLUMINATED OVERHEAD SIGN

PROPOSED	EXISTING	
		Overhead sign - Single post
		Overhead sign - Two post
		Overhead sign - Mounted on structure
		Overhead sign with electrolier

SIGNAL EQUIPMENT

PROPOSED	EXISTING	
		Pedestrian signal face
		Pedestrian push button post
		Pedestrian barricade
		Vehicle signal face (with backplate, 3-Section: red, yellow and green)
		Vehicle signal face with angle visors
PV	PV	Modifications of basic symbols: "L" Indicates all non-arrow sections louvered "LG" Indicates louvered green section only "PV" indicates 12" programmed visibility sections "8" indicates all 8" sections (only when specified)
		Type 15TS and Vehicle signal face
		Vehicle signal face with red, yellow and green left arrow sections
		Vehicle signal face with red and yellow sections and up green arrow
		Vehicle signal face (5 Section) with red, yellow and green sections and yellow and green right arrows
		Type 1 Standard and attached vehicle signal faces
		Standard with signal mast arm only and attached vehicle signal faces and internally illuminated street name sign
		Type 33 Standard, Left-turn vehicle signal face and sign
		Standard with luminaire and signal mast arms and attached vehicle signal faces
		Cantilever flashing beacon Type 9 Frame, with a sign unless otherwise specified or indicated
		Type 15-FBS Standard with two vehicle signal face sections with lens, backplate and visor with a sign
R	Y	Flashing beacon. One vehicle signal face section with lens, backplate and visor. "R" indicates red indication, "Y" indicates yellow indication
		Controller assembly. Door indicates front of cabinet

SIGNAL EQUIPMENT Cont

PROPOSED	EXISTING	
		Guard post
		Type 1 Standard with "Meter On" sign
		Emergency Vehicle detector

NOTES:

1. All signal sections shall be 12" unless shown otherwise.
2. Signal heads shall be provided with backplates unless shown otherwise.
3. Signal indication shall be LED.

STATE OF CALIFORNIA
DEPARTMENT OF TRANSPORTATION

ELECTRICAL SYSTEMS (SYMBOLS AND ABBREVIATIONS)

NO SCALE

RSP ES-1B DATED OCTOBER 5, 2007 SUPERCEDES STANDARD PLAN ES-1B DATED MAY 1, 2006 - PAGE 401 OF THE STANDARD PLANS BOOK DATED MAY 2006.

REVISED STANDARD PLAN RSP ES-1B

2006 REVISED STANDARD PLAN RSP ES-1B

7-10-07

DIST	COUNTY	ROUTE	POST MILES TOTAL PROJECT	SHEET NO.	TOTAL SHEETS
03	Sac	12	0.3/6.1	54	57

REGISTERED ELECTRICAL ENGINEER

October 5, 2007
PLANS APPROVAL DATE

REGISTERED PROFESSIONAL ENGINEER
Jeffery G. McRae
No. E14512
Exp. 6-30-08
ELECTRICAL
STATE OF CALIFORNIA

The State of California or its officers or agents shall not be responsible for the accuracy or completeness of electronic copies of this plan sheet.

To accompany plans dated 5-14-12

EQUIPMENT IDENTIFICATION

ILLUMINATED SIGN IDENTIFICATION NUMBER:

Sign No. 12345 — Sign number - Place on post or structure

10 ISL SCI 1.0

- 1.0 — Transformer rating (kVA)
- SCI — Lighting control type
- ISL — Number and type of fixtures

Do NOT place on standard or structure

ELECTROLIER OR EQUIPMENT IDENTIFICATION NUMBER:

12345 - 15'-0"

- 15'-0" — Mast arm length, if shown. Do not place on standard or structure.
- 12345 — Equipment number - Place on standard or structure. Existing equipment numbers are shown in parenthesis

CONDUIT AND CONDUCTOR IDENTIFICATION:

1½"C, 2#10, 15#14, 2 DLC

- 2#10, 15#14, 2 DLC — Number and size of conductors and cables
- 1½"C — Size of conduit in inches

Ø1, Ø2, Ø2P, etc.	Traffic phase identification for signal faces, detectors and phase diagrams
1 2 3	Project note numbers
A B C	Equipment description, installation or item numbers
1 2 3	Conduit run numbers

SIGNAL AND LIGHTING STANDARD (TYPICAL DESIGNATION):

19A - 3 - 100

- 100 — Wind velocity = 100 mph
- 3 — Case 3 arm loading
- 19A — Standard type
- Standard Plan sheet number
- Detail number or letter

MISCELLANEOUS EQUIPMENT

PROPOSED	EXISTING	
CMS	cms	Changeable message sign
		Closed circuit television camera
		Highway advisory radio pole and antenna
EMS	ems	Extinguishable message sign
M V	m v	Detection device M = Microwave sensor V = Video image sensor

WIRING DIAGRAM LEGEND

P	Pole
CB	Circuit breaker
A	Ampere
V	Volt
M	Metered
UM	Unmetered
NB	Neutral bus
GB	Ground bus
G	Equipment grounding conductor
N	Grounded conductor (Neutral)

- External conductor
- Conductor or bus
- Tie point
- Contactor coil
- Contactor, Contact NO
- Terminal blocks
- Contactor, Contact NC
- Enclosure bond
- Grounding electrode
- Circuit breaker
- Receptacle

PULL BOXES

PROPOSED	EXISTING	
		Pull box-No. 5 unless otherwise indicated or noted.
3	9A(21)	Pull box-Additional designations or descriptions

3 = No. 3½ pull box
5 = No. 5 pull box
6 = No. 6 pull box
7 = No. 7 (Ceiling pull box)
8 = No. 8 (Pendant soffit pull box)
9 = No. 9 pull box
9A = No. 9A pull box

(C) = Communications pull box
(E) = Pull box with extension
(S) = Sprinkler control pull box
(21) = Anchor bolts and conduit for future installation of Type 21 Standard
(T) = Traffic pull box

VEHICLE DETECTORS

5 J 9 U

- U — Vehicle detector designation
- 9 — U = Upper, L = Lower
- J — Slot number in input file
- 5 — Input file (I or J)
- Phase

PROPOSED	EXISTING	
		Type A detector loop. Outline of sawcut shown.
		Type B detector loop. Outline of sawcut shown.
		Type C detector loop. Outline of sawcut shown.
		Type D detector loop. Outline of sawcut shown.
		Type E detector loop. Outline of sawcut shown.
		Type Q detector loop. Outline of sawcut shown.
		Magnetic detector
DH	dh	Detector handhole
		Microwave or video detection zone

STATE OF CALIFORNIA
DEPARTMENT OF TRANSPORTATION

ELECTRICAL SYSTEMS (SYMBOLS AND ABBREVIATIONS)

NO SCALE

RSP ES-1C DATED OCTOBER 5, 2007 SUPERCEDES STANDARD PLAN ES-1C DATED MAY 1, 2006 - PAGE 402 OF THE STANDARD PLANS BOOK DATED MAY 2006.

REVISED STANDARD PLAN RSP ES-1C

2006 REVISED STANDARD PLAN RSP ES-1C

DIST	COUNTY	ROUTE	POST MILES TOTAL PROJECT	SHEET NO.	TOTAL SHEETS
03	Sac	12	0.3/6.1	55	57

REGISTERED ELECTRICAL ENGINEER

October 5, 2007
PLANS APPROVAL DATE

REGISTERED PROFESSIONAL ENGINEER Jeffery G. McRae No. E14512 Exp. 6-30-08 ELECTRICAL STATE OF CALIFORNIA

The State of California or its officers or agents shall not be responsible for the accuracy or completeness of electronic copies of this plan sheet.

To accompany plans dated 5-14-12

LOOP INSTALLATION PROCEDURE

1. Loops shall be centered in lanes.
2. Saw slots in pavement for loop conductors as shown in details.
3. Distance between side of loop and a lead-in saw cut from adjacent detectors shall be 2'-0" minimum. Distance between lead-in saw cuts shall be 6" minimum.
4. Bottom of saw slot shall be smooth with no sharp edges.
5. Slots shall be washed until clean, blown out and thoroughly dried before installing loop conductors.
6. Adjacent loops on the same sensor unit channel shall be wound in opposite directions.
7. Identify and tag loop circuit pairs in the pull box with loop number, start (S) and finish (F) of conductor. Identify and tag lead-in-cable with sensor number and phase.
8. Install loop conductor in slot using a 3/16" to 1/4" thick wood paddle. Hold loop conductors with wood paddles (at the bottom of the sawed slot) during sealant placement.
9. No more than 2 twisted pairs shall be installed in one sawed slot.
10. Allow additional 5'-0" of slack length of conductor for the lead-in run to pull box.
11. The additional length of each conductor for each loop shall be twisted together into a pair (6 turns per 3'-4" minimum) before being placed in the slot and conduit leading to pull box.
12. Test each loop circuit for continuity, circuit resistance and insulation resistance at the pull box before filling slots.
13. Fill slots as shown in details.
14. Splice loop conductors to lead-in-cable. Splices shall be soldered.
15. End of lead-in-cable and Type 2 loop conductor shall be waterproofed prior to installing in conduit to prevent moisture from entering the cable.
16. Lead-in-cable shall not be spliced between the pull box and the controller cabinet terminals.
17. Test each loop circuit for continuity, circuit resistance and insulation resistance at the controller cabinet location.
18. Where loop conductors are not to be spliced to a lead-in-cable, the ends of the conductors shall be taped and waterproofed with electrical insulating coating.

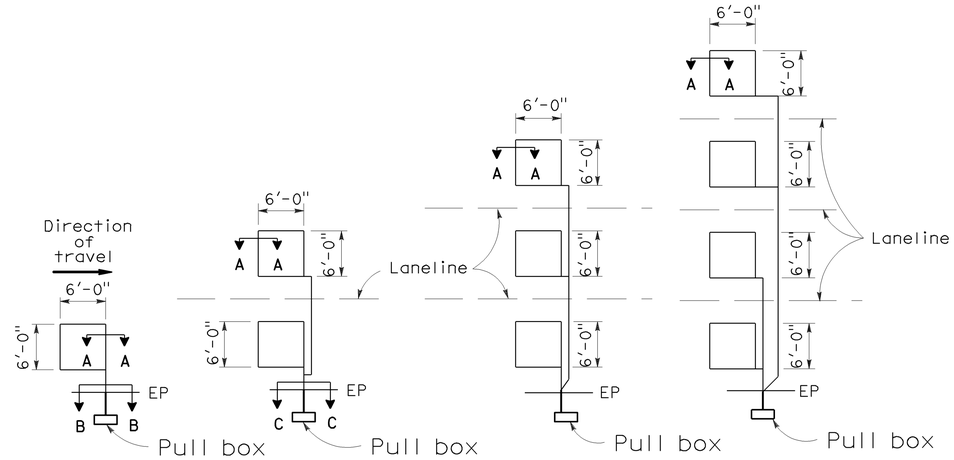

TYPE 1A INSTALLATION | TYPE 2A INSTALLATION | TYPE 3A INSTALLATION | TYPE 4A INSTALLATION

SAWCUT DETAILS

(Type A loop detector configurations illustrated)

1. 1A thru 4A = 1 Type A loop configuration in each lane.
2. 1B thru 4B = 1 Type B loop configuration in each lane.
3. 1C = 1 Type C loop configuration entering lanes as required.
4. 1D thru 4D = 1 Type D loop configuration in each lane.
5. 1E thru 4E = 1 Type E loop configuration in each lane.
6. 1Q thru 4Q = 1 Type Q loop configuration in each lane. (Use Type A, B, C, D, E or Q loop detector configurations only when specified or shown on plans)

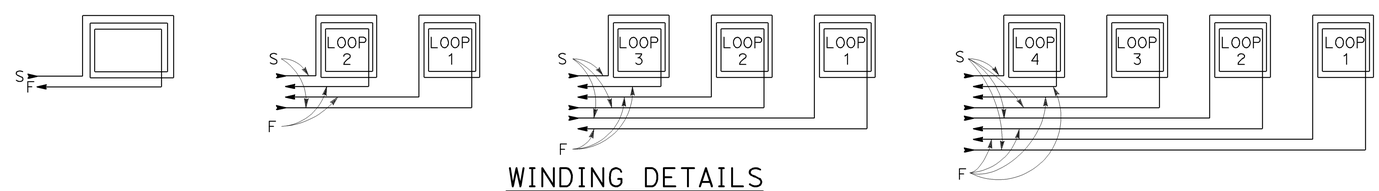

WINDING DETAILS

See Notes 6 and 7

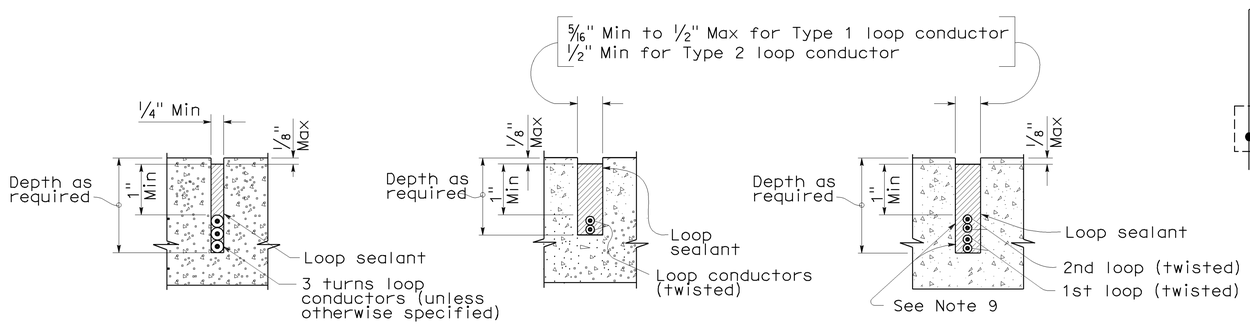

SECTION A-A | SECTION B-B | SECTION C-C

SLOT DETAILS - TYPE 1 AND TYPE 2 LOOP CONDUCTOR

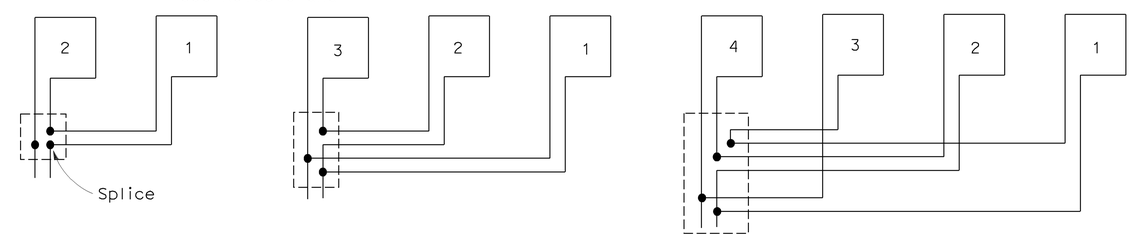

TYPICAL LOOP CONNECTIONS

(Dashed lines represent the pull box)

STATE OF CALIFORNIA
DEPARTMENT OF TRANSPORTATION

ELECTRICAL SYSTEMS (DETECTORS)

NO SCALE

RSP ES-5A DATED OCTOBER 5, 2007 SUPERCEDES STANDARD PLAN ES-5A DATED MAY 1, 2006 - PAGE 423 OF THE STANDARD PLANS BOOK DATED MAY 2006.

REVISED STANDARD PLAN RSP ES-5A

2006 REVISED STANDARD PLAN RSP ES-5A

8-17-07

DIST	COUNTY	ROUTE	POST MILES TOTAL PROJECT	SHEET NO.	TOTAL SHEETS
03	Sac	12	0.3/6.1	56	57

REGISTERED ELECTRICAL ENGINEER

January 20, 2012
PLANS APPROVAL DATE

REGISTERED PROFESSIONAL ENGINEER Jeffery G. McRae No. E14512 Exp. 6-30-12 ELECTRICAL STATE OF CALIFORNIA

The State of California or its officers or agents shall not be responsible for the accuracy or completeness of electronic copies of this plan sheet.

To accompany plans dated 5-14-12

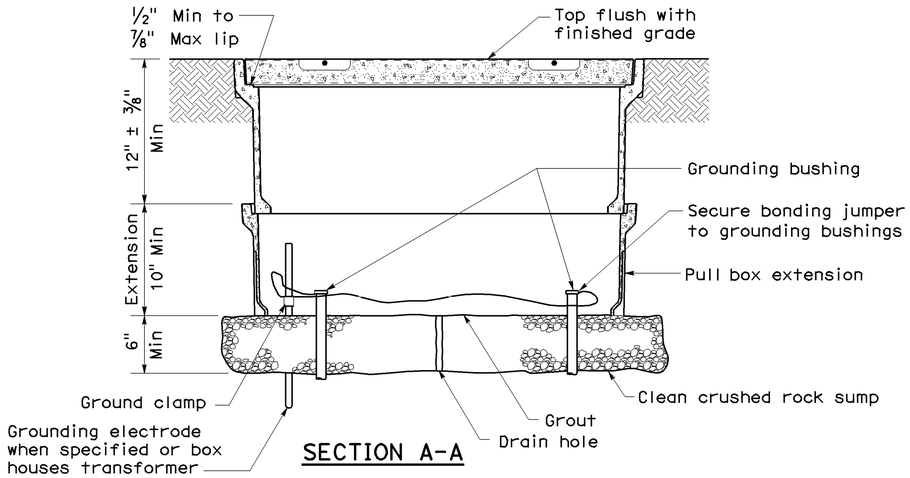

SECTION A-A

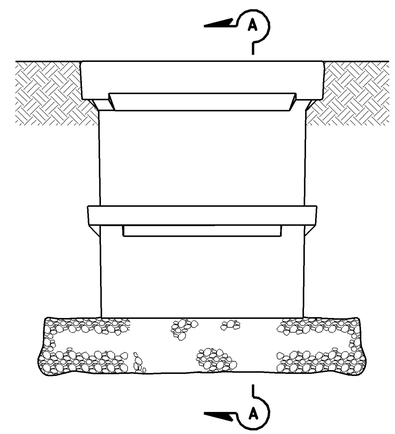

SIDE VIEW

INSTALLATION DETAILS

DETAIL A

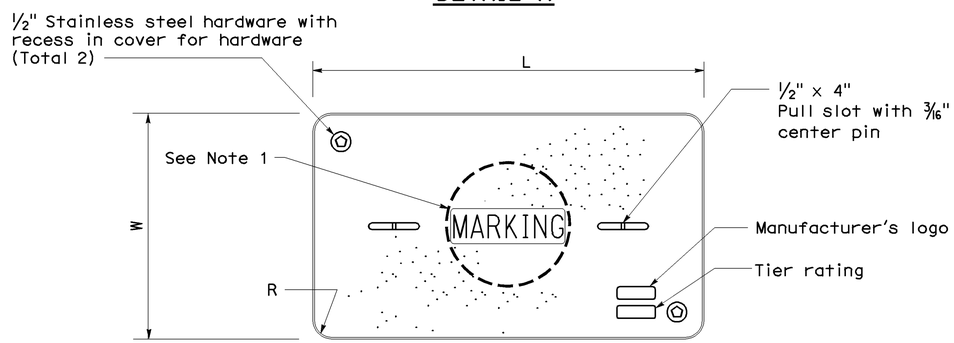

COVER TOP VIEW

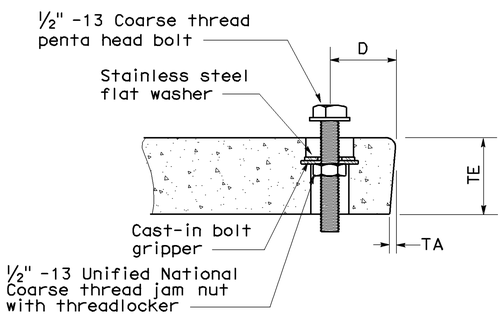

TYPICAL COVER CAPTIVE BOLT
(Or similar)

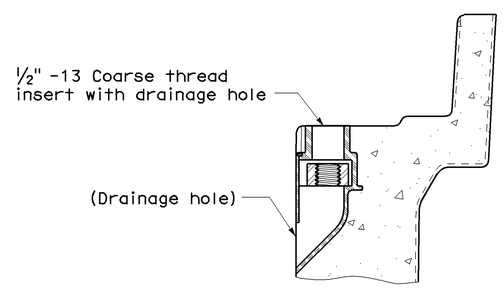

TYPICAL THREADED INSERT
(Or similar)

DIMENSION TABLE

PULL BOX	PULL BOX			COVER						
	Minimum Depth Box	Minimum Depth Extension	Maximum Weight	L	W	R	TE	TA	D	Maximum Weight
No. 3½	12"	N/A	40 lb	1' - 3⅜"	10⅛"	1⅜"	2"	⅛"	1¾"	30 lb
No. 5	12"	10"	55 lb	1' - 11¼"	1' - 1¾"	1⅜"	2"	⅛"	1¾"	60 lb
No. 6	12"	10"	70 lb	2' - 6½"	1' - 5½"	1⅜"	2"	⅛"	2"	85 lb

NOTES ON PULL BOXES:

1. Pull box covers must be marked as follows: "SERVICE" Service circuits between service point and service disconnect; "SPRINKLER-CONTROL" sprinkler control circuits, 50 V or less; "CALTRANS" on all pull boxes, except pull boxes marked "SPRINKLER-CONTROL"; and "TELEPHONE" Telephone service;
   - A) No. 3½ pull box.
     - 1) "SIGNAL" - Traffic signal circuits with or without street or sign lighting circuits.
     - 2) "ST LIGHTING" - Street or sign lighting circuits where voltage is under 600 V.
   - B) No. 5, 6, 9 or 9A pull box.
     - 1) "TRAFFIC SIGNAL" - Traffic signal circuits with or without street or sign lighting circuits.
     - 2) "STREET LIGHTING" - Street or sign lighting circuits where voltage is under 600 V.
     - 3) "STREET LIGHTING-HIGH VOLTAGE" - Street or sign lighting circuits where voltage is above 600 V.
     - 4) "IRRIGATION" - Circuits to irrigation controller 120 V or more.
     - 5) "RAMP METER" - Ramp meter circuits.
     - 6) "COUNT STATION" - Count or speed monitor circuits.
     - 7) "COMMUNICATIONS" - Communication circuits.
     - 8) "TOS COMMUNICATIONS" - TOS communication line.
     - 9) "TOS POWER" -TOS power.
     - 10) "TDC POWER" - Telephone demarcation cabinet power.
     - 11) "CCTV" - Closed circuit television circuits.
     - 12) "TMS" - Traffic monitoring station circuits.
     - 13) "CMS" - Changeable message sign circuits.
     - 14) "HAR" - Highway advisory radio circuits.
2. The nominal dimensions of the opening in which the cover sets must be the same as the cover dimensions (L and W) plus ⅛" or greater.
3. Covers and boxes must be interchangeable with California Standard. When interchanged with a standard, the top surfaces must be flush within ⅛". Top outside radius of covers and pull boxes must have a ⅛" radius.
4. Pull box extension may be another pull box as long as the bottom edge of the pull box can fit into the cover opening.

STATE OF CALIFORNIA
DEPARTMENT OF TRANSPORTATION

ELECTRICAL SYSTEMS (PULL BOX)

NO SCALE

NSP ES-8A DATED JANUARY 20, 2012 SUPPLEMENTS THE STANDARD PLANS BOOK DATED MAY 2006.

NEW STANDARD PLAN NSP ES-8A

2006 NEW STANDARD PLAN NSP ES-8A

9-28-11

DIST	COUNTY	ROUTE	POST MILES TOTAL PROJECT	SHEET NO.	TOTAL SHEETS
03	Sac	12	0.3/6.1	57	57

REGISTERED ELECTRICAL ENGINEER

January 20, 2012
PLANS APPROVAL DATE

REGISTERED PROFESSIONAL ENGINEER
Jeffery G. McRae
No. E14512
Exp. 6-30-12
ELECTRICAL
STATE OF CALIFORNIA

The State of California or its officers or agents shall not be responsible for the accuracy or completeness of electronic copies of this plan sheet.

To accompany plans dated 5-14-12

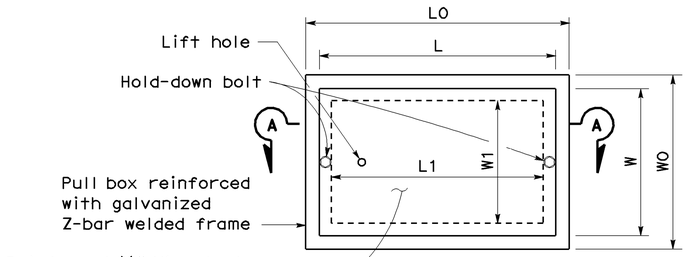

TOP VIEW

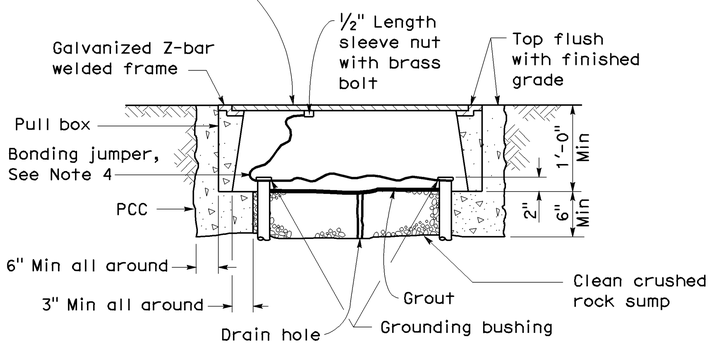

SECTION A-A

No. 3½(T), No. 5(T) AND No. 6(T) TRAFFIC PULL BOX

NOTES ON PULL BOXES:

1. Traffic pull box shall be provided with steel cover and special concrete footing. Steel cover shall have embossed non-skid pattern.
2. Steel reinforcing shall be as regularly used in the standard products of the respective manufacturer.
3. Pull box covers must be marked as follows: "SERVICE" Service circuits between service point and service disconnect; "SPRINKLER-CONTROL" Sprinkler control circuits, 50 V or less; "CALTRANS" On all pull boxes, except pull boxes marked "SPRINKLER-CONTROL"; and "TELEPHONE" Telephone service.
   A) No. 3½(T) pull box.
      1) "SIGNAL" - Traffic signal circuits with or without street or sign lighting circuits.
      2) "ST LIGHTING" - Street or sign lighting circuits where voltage is under 600 V.
   B) No. 5(T) or 6(T) pull box.
      1) "TRAFFIC SIGNAL" - Traffic signal circuits with or without street or sign lighting circuits.
      2) "STREET LIGHTING" - Street or sign lighting circuits where voltage is under 600 V.
      3) "STREET LIGHTING-HIGH VOLTAGE" - Street or sign lighting circuits where voltage is above 600 V.
      4) "IRRIGATION" - Circuits to irrigation controller 120 V or more.
      5) "RAMP METER" - Ramp meter circuits.
      6) "COUNT STATION" - Count or speed monitor circuits.
      7) "COMMUNICATION" - Communication circuits.
      8) "TOS COMMUNICATIONS" - TOS communications line.
      9) "TOS POWER" - TOS power.
      10) "TDC POWER" - Telephone demarcation cabinet power.
      11) "CCTV" - Closed circuit television circuits.
      12) "TMS" - Traffic monitoring station circuits.
      13) "CMS" - Changeable message sign circuits.
      14) "HAR" - Highway advisory radio circuits.
4. Bonding jumper for metal covers shall be 3' long, minimum.
5. The nominal dimensions of the opening in which the cover sets must be the same as the cover dimensions except the length and width dimensions shall be ⅛" greater.
6. Covers and boxes must be interchangeable with California standard male and female gages. When interchanged with a standard male or female gage, the top surfaces must be flush within ⅛".

DIMENSION TABLE

PULL BOX	BOX						COVER				
	Minimum * Thickness	Minimum Depth Box and Extension	WO	LO	L1	W1	L **	W **	R	Edge Thickness	Edge Taper
No. 3½(T)	1½"	1'-0"	1'-5"± 1"	1'-8⅞"±	1'-2½"±	10⅝"± 1"	1'-8"±	1'-1¾"±	0"	½"	None
No. 5(T)	1¾"	1'-0"	1'-11½"± 1"	2'-5½"±	1'-7"±	1'-1"± 1"	2'-3"±	1'-4"±	0"	½"	None
No. 6(T)	2"	1'-0"	2'-6"± 1"	2'-11½"±	1'-11½"±	1'-5"± 1"	2'-9"±	1'-8"±	0"	½"	None

* Excluding conduit web ** Top dimension

STATE OF CALIFORNIA
DEPARTMENT OF TRANSPORTATION

ELECTRICAL SYSTEMS (TRAFFIC RATED PULL BOX)

NO SCALE

NSP ES-8B DATED JANUARY 20, 2012 SUPPLEMENTS THE STANDARD PLANS BOOK DATED MAY 2006.

NEW STANDARD PLAN NSP ES-8B

2006 NEW STANDARD PLAN NSP ES-8B

9-28-11