Dist	COUNTY	ROUTE	POST MILES TOTAL PROJECT	SHEET No.	TOTAL SHEETS
03	Nev	80	R12.3/13.3	1	28

STATE OF CALIFORNIA

DEPARTMENT OF TRANSPORTATION

ACHSNHG-0804 (198)

PROJECT PLANS FOR CONSTRUCTION ON

STATE HIGHWAY

IN NEVADA COUNTY
NEAR TRUCKEE
FROM 0.4 MILE WEST OF DONNER PASS ROAD OVERCROSSING TO 0.1 MILE EAST OF DONNER PASS ROAD OVERCROSSING

TO BE SUPPLEMENTED BY STANDARD PLANS DATED 2010

INDEX OF PLANS

SHEET No.	DESCRIPTION
1	TITLE AND LOCATION MAP
2-3	TYPICAL CROSS SECTIONS
4-6	LAYOUTS
7-9	PROFILES
10-11	CONSTRUCTION DETAILS
12-13	DRAINAGE DETAILS
14	CONSTRUCTION AREA SIGNS
15-17	PAVEMENT DELINEATION AND SIGN PLAN, PAVEMENT DELINEATION QUANTITIES
18-20	SIGN DETAILS, SIGN QUANTITIES
21	SUMMARY OF QUANTITIES
22	ELECTRICAL PLANS
23-28	REVISED AND NEW STANDARD PLANS

THE STANDARD PLANS LIST APPLICABLE TO THIS CONTRACT IS INCLUDED IN THE NOTICE TO BIDDERS AND SPECIAL PROVISIONS BOOK.

LOCATION MAP

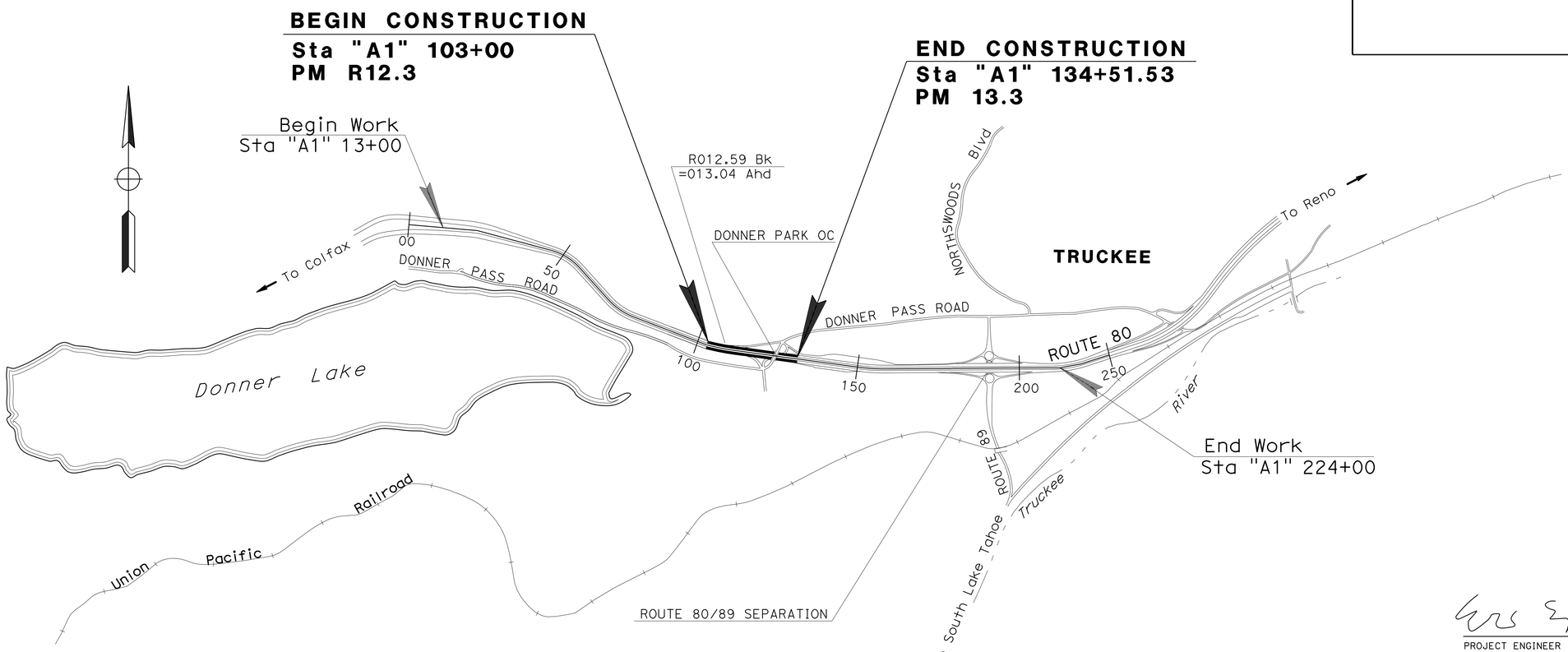

NO SCALE

THE CONTRACTOR SHALL POSSESS THE CLASS (OR CLASSES) OF LICENSE AS SPECIFIED IN THE "NOTICE TO BIDDERS."

PROJECT MANAGER: NADARAJAH SUTHAHAR

DESIGN ENGINEER: STEPHEN WRIGHT

9/17/12
PROJECT ENGINEER DATE
REGISTERED CIVIL ENGINEER

REGISTERED PROFESSIONAL ENGINEER
ERIC NORMAN SOUZA
No. 75706
Exp. 6/30/14
CIVIL
STATE OF CALIFORNIA

October 15, 2012
PLANS APPROVAL DATE

THE STATE OF CALIFORNIA OR ITS OFFICERS OR AGENTS SHALL NOT BE RESPONSIBLE FOR THE ACCURACY OR COMPLETENESS OF SCANNED COPIES OF THIS PLAN SHEET.

CONTRACT No.	03-3F0304
PROJECT ID	0312000045

LAST REVISION 08-21-12

DATE PLOTTED => 12-DEC-2012
TIME PLOTTED => 18:19

Dist	COUNTY	ROUTE	POST MILES TOTAL PROJECT	SHEET No.	TOTAL SHEETS
03	Nev	80	R12.3/13.3	2	28

REGISTERED CIVIL ENGINEER 9/17/12 DATE

10/15/12
PLANS APPROVAL DATE

REGISTERED PROFESSIONAL ENGINEER ERIC NORMAN SOUZA No. 75706 Exp. 06/30/14 CIVIL STATE OF CALIFORNIA

THE STATE OF CALIFORNIA OR ITS OFFICERS OR AGENTS SHALL NOT BE RESPONSIBLE FOR THE ACCURACY OR COMPLETENESS OF SCANNED COPIES OF THIS PLAN SHEET.

NOTES:

1. DIMENSIONS OF THE PAVEMENT STRUCTURES (STRUCTURAL SECTIONS) ARE SUBJECT TO TOLERANCES SPECIFIED IN THE STANDARD SPECIFICATIONS.
2. FOR CB (TYPE 60SF) TRANSITIONS, SEE LAYOUTS AND CONSTRUCTION DETAILS.

LEGEND:

BP = BREAK POINT
DFL = DITCH FLOW LINE

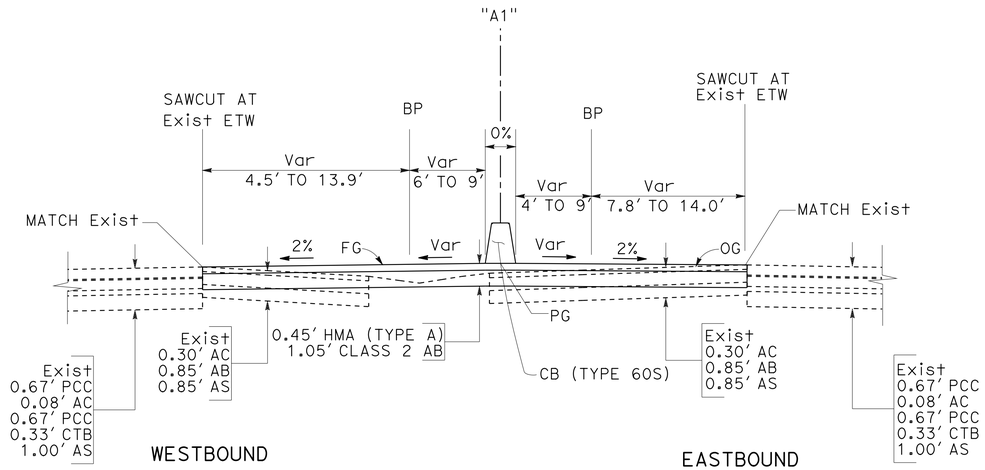

ROUTE 80

STA "A1" LINE 127+84.33 TO "A1" 130+00.00
STA "A1" LINE 123+73.19 TO "A1" 125+91.05
STA "A1" LINE 122+24.43 TO "A1" 122+27.00
STA "A1" LINE 109+00.21 TO "A1" 119+64.68

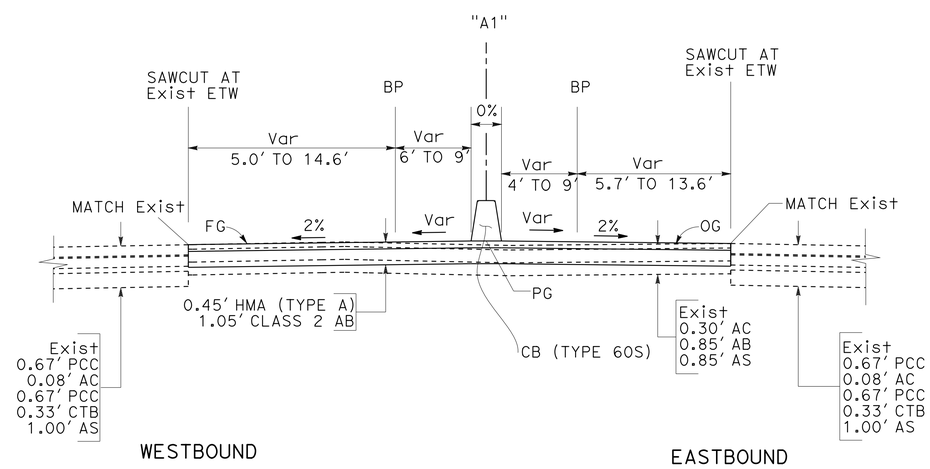

ROUTE 80

STA "A1" LINE 125+91.05 TO "A1" 126+04.89
STA "A1" LINE 119+64.68 TO "A1" 122+24.43
STA "A1" LINE 103+00.00 TO "A1" 109+00.21

TYPICAL CROSS SECTIONS

NO SCALE

X-1

REVISED BY	DATE REVISED

CALCULATED-DESIGNED BY: A.G. CHIN
CHECKED BY: ERIC SOUZA
FUNCTIONAL SUPERVISOR: STEPHEN WRIGHT

STATE OF CALIFORNIA - DEPARTMENT OF TRANSPORTATION
Caltrans
TRAFFIC

LAST REVISION 04-23-12
DATE PLOTTED => 12-DEC-2012
TIME PLOTTED => 18:19

Dist	COUNTY	ROUTE	POST MILES TOTAL PROJECT	SHEET No.	TOTAL SHEETS
03	Nev	80	R12.3/13.3	3	28

REGISTERED CIVIL ENGINEER 9/17/12 DATE

10/15/12
PLANS APPROVAL DATE

REGISTERED PROFESSIONAL ENGINEER
ERIC NORMAN SOUZA
No. 75706
Exp. 06/30/14
CIVIL
STATE OF CALIFORNIA

THE STATE OF CALIFORNIA OR ITS OFFICERS OR AGENTS SHALL NOT BE RESPONSIBLE FOR THE ACCURACY OR COMPLETENESS OF SCANNED COPIES OF THIS PLAN SHEET.

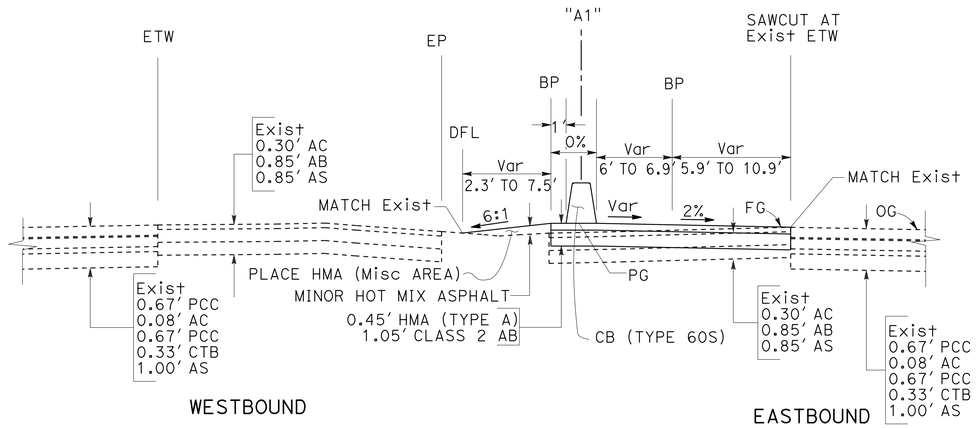

ROUTE 80

STA "A1" LINE 130+00.00 TO "A1" 134+51.53

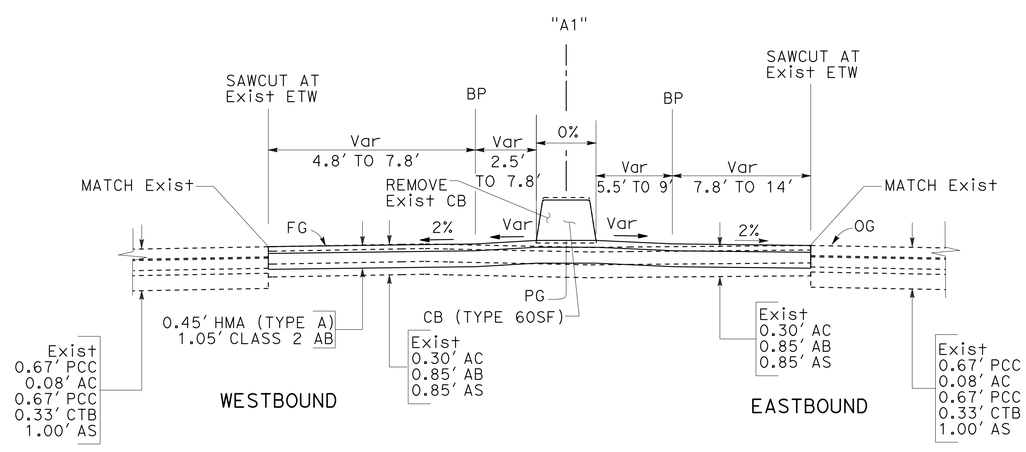

ROUTE 80

STA "A1" LINE 126+04.89 TO "A1" 127+84.33
STA "A1" LINE 122+27.00 TO "A1" 123+73.19

TYPICAL CROSS SECTIONS

NO SCALE

X-2

STATE OF CALIFORNIA - DEPARTMENT OF TRANSPORTATION
Caltrans
TRAFFIC

FUNCTIONAL SUPERVISOR: STEPHEN WRIGHT
CALCULATED-DESIGNED BY: A.G. CHIN
CHECKED BY: ERIC SOUZA
REVISED BY
DATE REVISED

LAST REVISION 08-21-12
DATE PLOTTED => 12-DEC-2012
TIME PLOTTED => 18:19

Dist	COUNTY	ROUTE	POST MILES TOTAL PROJECT	SHEET No.	TOTAL SHEETS
03	Nev	80	R12.3/13.3	4	28

REGISTERED CIVIL ENGINEER 9/17/12 DATE

10/15/12
PLANS APPROVAL DATE

REGISTERED PROFESSIONAL ENGINEER ERIC NORMAN SOUZA No. 75706 Exp. 06/30/14 CIVIL STATE OF CALIFORNIA

THE STATE OF CALIFORNIA OR ITS OFFICERS OR AGENTS SHALL NOT BE RESPONSIBLE FOR THE ACCURACY OR COMPLETENESS OF SCANNED COPIES OF THIS PLAN SHEET.

NOTES:

1. FOR COMPLETE RIGHT OF WAY AND ACCURATE ACCESS DATA, SEE RIGHT OF WAY RECORD MAPS AT DISTRICT OFFICE.
2. FOR DRAINAGE SYSTEMS, SEE DRAINAGE DETAILS SHEETS.

LEGEND:

MINOR HOT MIX ASPHALT

CONCRETE BARRIER

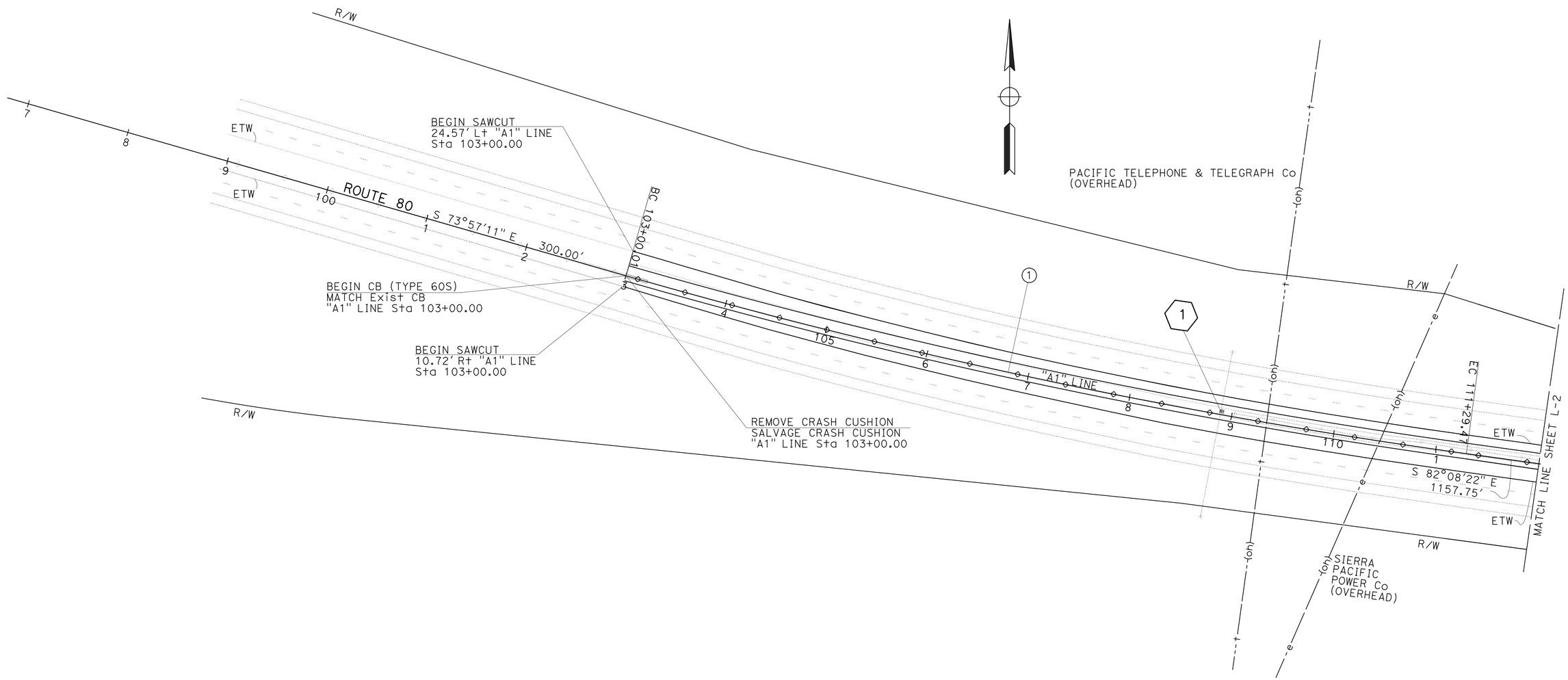

CURVE DATA

No.	R	Δ	T	L
1	5805.15'	8°11'12"	415.43'	829.46'

LAYOUT

SCALE: 1" = 50'

L-1

STATE OF CALIFORNIA - DEPARTMENT OF TRANSPORTATION

Caltrans

TRAFFIC

FUNCTIONAL SUPERVISOR: STEPHEN WRIGHT

CALCULATED-DESIGNED BY: A.G. CHIN

CHECKED BY: ERIC SOUZA

REVISED BY

DATE REVISED

LAST REVISION 08-21-12

DATE PLOTTED => 12-DEC-2012

TIME PLOTTED => 18:19

BORDER LAST REVISED 7/2/2010

USERNAME => s119538

DGN FILE => 0312000045ea001.dgn

RELATIVE BORDER SCALE IS IN INCHES 0 1 2 3

UNIT 0399

PROJECT NUMBER & PHASE 03120000451

Dist	COUNTY	ROUTE	POST MILES TOTAL PROJECT	SHEET No.	TOTAL SHEETS
03	Nev	80	R12.3/13.3	5	28

REGISTERED CIVIL ENGINEER 9/17/12 DATE

10/15/12
PLANS APPROVAL DATE

REGISTERED PROFESSIONAL ENGINEER
ERIC NORMAN SOUZA
No. 75706
Exp. 06/30/14
CIVIL
STATE OF CALIFORNIA

THE STATE OF CALIFORNIA OR ITS OFFICERS OR AGENTS SHALL NOT BE RESPONSIBLE FOR THE ACCURACY OR COMPLETENESS OF SCANNED COPIES OF THIS PLAN SHEET.

NOTES:

1. FOR COMPLETE RIGHT OF WAY AND ACCURATE ACCESS DATA, SEE RIGHT OF WAY RECORD MAPS AT DISTRICT OFFICE
2. SEE CONSTRUCTION DETAILS FOR CB (TYPE 60SF) TRANSITIONS.
3. LEVEL 3 EXISTING CONDUIT AND TRUCKEE DONNER PUD EXISTING WATER CASING ARE LOCATED IN A JOINT TRENCH.

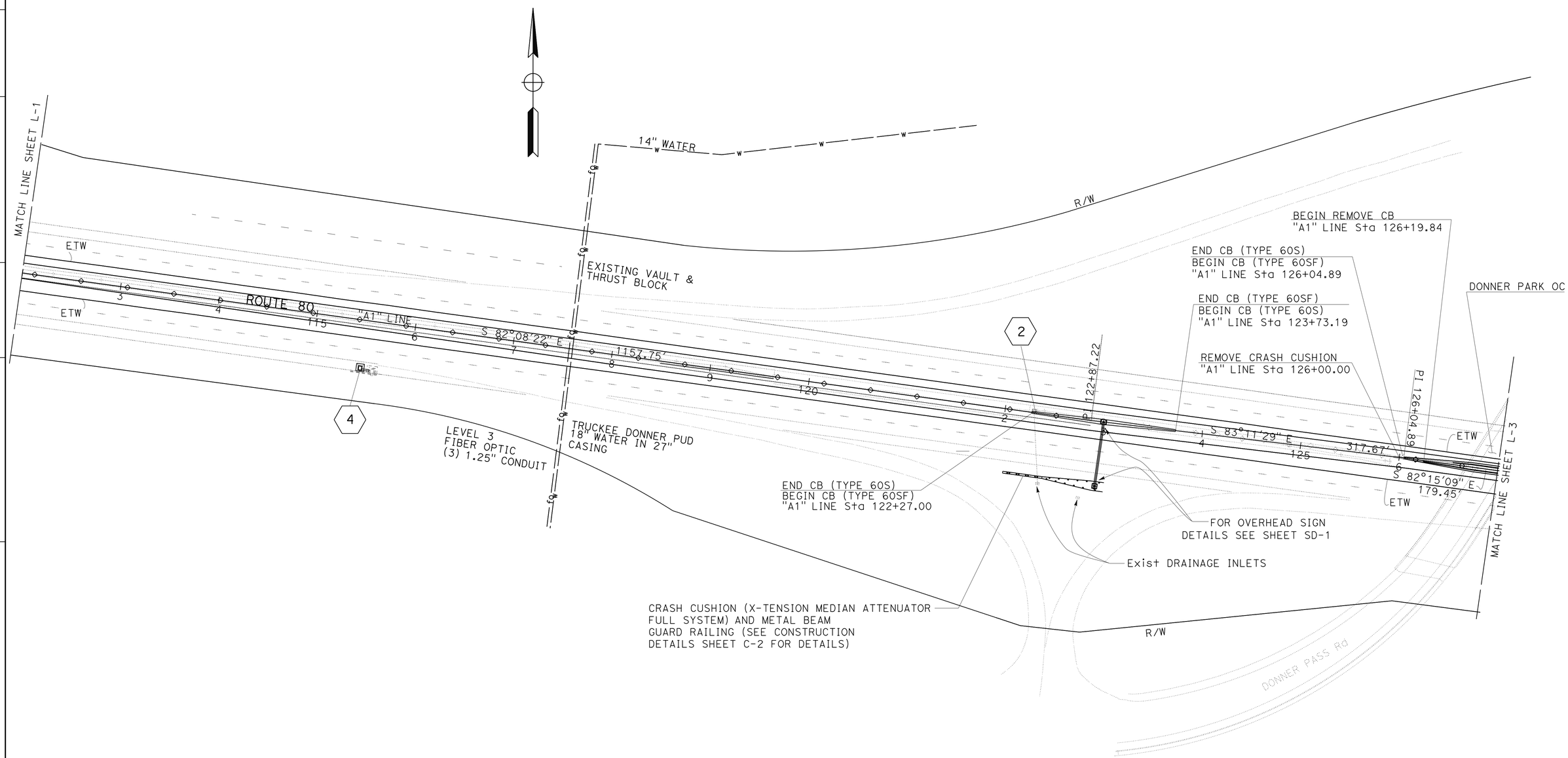

LAYOUT

SCALE: 1" = 50'

L-2

STATE OF CALIFORNIA - DEPARTMENT OF TRANSPORTATION
Caltrans
TRAFFIC

FUNCTIONAL SUPERVISOR: STEPHEN WRIGHT
CALCULATED-DESIGNED BY: ERIC SOUZA
CHECKED BY: A.G. CHIN
REVISED BY
DATE REVISED

LAST REVISION 08-21-12
DATE PLOTTED => 12-DEC-2012
TIME PLOTTED => 18:19

Dist	COUNTY	ROUTE	POST MILES TOTAL PROJECT	SHEET No.	TOTAL SHEETS
03	Nev	80	R12.3/13.3	6	28

REGISTERED CIVIL ENGINEER 9/17/12 DATE

10/15/12
PLANS APPROVAL DATE

REGISTERED PROFESSIONAL ENGINEER
ERIC NORMAN SOUZA
No. 75706
Exp. 6/30/14
CIVIL
STATE OF CALIFORNIA

THE STATE OF CALIFORNIA OR ITS OFFICERS OR AGENTS SHALL NOT BE RESPONSIBLE FOR THE ACCURACY OR COMPLETENESS OF SCANNED COPIES OF THIS PLAN SHEET.

NOTES:

1. FOR COMPLETE RIGHT OF WAY AND ACCURATE ACCESS DATA, SEE RIGHT OF WAY RECORD MAPS AT DISTRICT OFFICE.

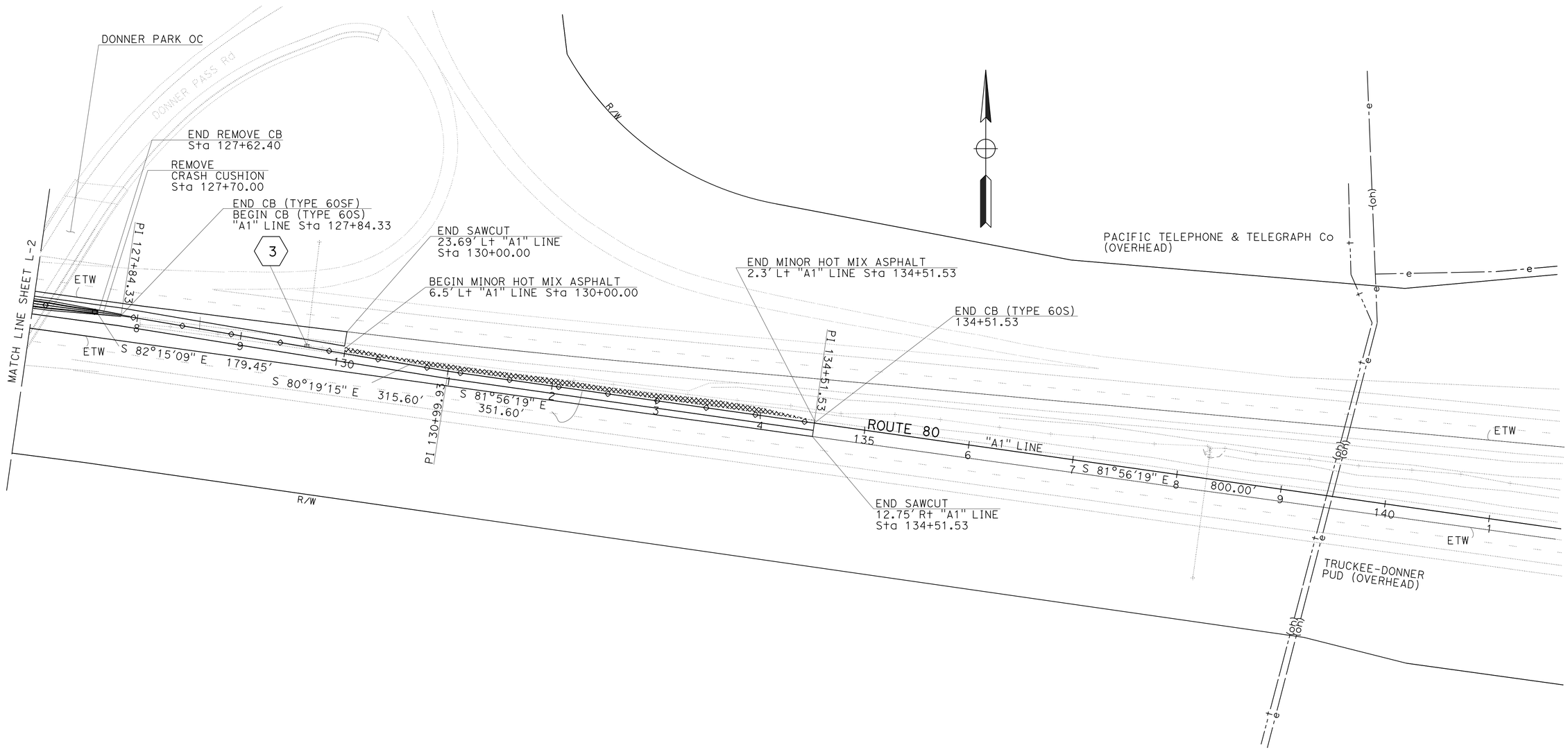

LAYOUT

SCALE: 1" = 50'

L-3

STATE OF CALIFORNIA - DEPARTMENT OF TRANSPORTATION
Caltrans
TRAFFIC

FUNCTIONAL SUPERVISOR: STEPHEN WRIGHT
CALCULATED-DESIGNED BY: A.G. CHIN
CHECKED BY: ERIC SOUZA
REVISED BY
DATE REVISED

LAST REVISION 08-21-12
DATE PLOTTED => 12-DEC-2012
TIME PLOTTED => 18:19

Dist	COUNTY	ROUTE	POST MILES TOTAL PROJECT	SHEET No.	TOTAL SHEETS
03	Nev	80	R12.3/13.3	7	28

REGISTERED CIVIL ENGINEER 9/17/12 DATE

10/15/12
PLANS APPROVAL DATE

REGISTERED PROFESSIONAL ENGINEER
ERIC NORMAN SOUZA
No. 75706
Exp. 06/30/14
CIVIL
STATE OF CALIFORNIA

THE STATE OF CALIFORNIA OR ITS OFFICERS OR AGENTS SHALL NOT BE RESPONSIBLE FOR THE ACCURACY OR COMPLETENESS OF SCANNED COPIES OF THIS PLAN SHEET.

NOTE:

VERTICAL CONTROL - NGVD 29

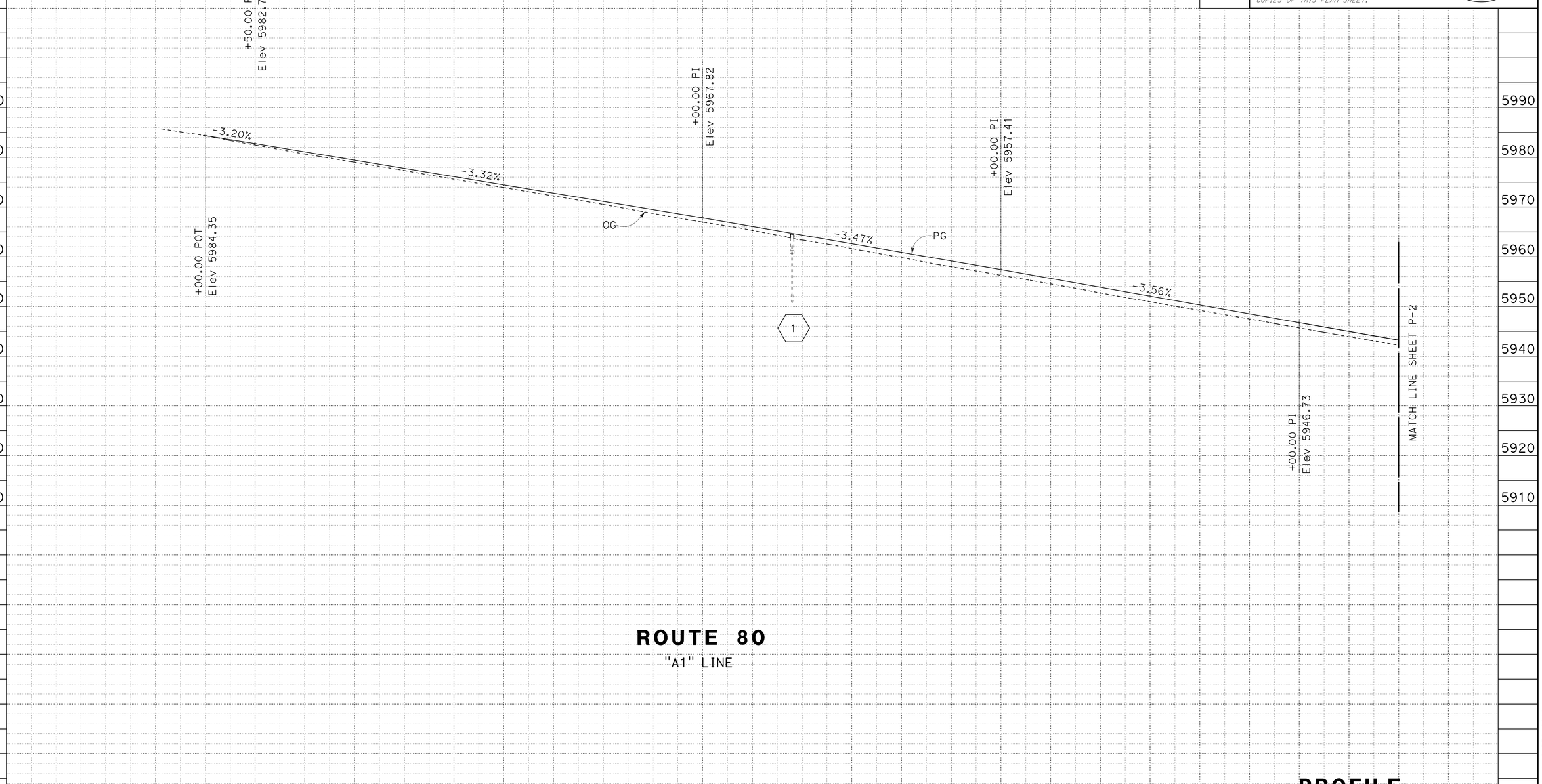

ROUTE 80

"A1" LINE

PROFILE

SCALE: Horiz 1" = 50'
Vert 1" = 10'

P-1

STATION		2	3	4	105	6	7	8	9	110	1	2	3	4	115	TOTAL
CY	Exc								1,790							1,790
	Emb								0							0

STATE OF CALIFORNIA - DEPARTMENT OF TRANSPORTATION
Caltrans
TRAFFIC

FUNCTIONAL SUPERVISOR: STEPHEN WRIGHT
CALCULATED-DESIGNED BY: A.G. CHIN
CHECKED BY: ERIC SOUZA
REVISED BY
DATE REVISED

LAST REVISION 03-27-12
DATE PLOTTED => 12-DEC-2012
TIME PLOTTED => 18:19

Dist	COUNTY	ROUTE	POST MILES TOTAL PROJECT	SHEET No.	TOTAL SHEETS
03	Nev	80	R12.3/13.3	8	28

REGISTERED CIVIL ENGINEER 9/17/12 DATE

10/15/12
PLANS APPROVAL DATE

REGISTERED PROFESSIONAL ENGINEER
ERIC NORMAN SOUZA
No. 75706
Exp. 06/30/14
CIVIL
STATE OF CALIFORNIA

THE STATE OF CALIFORNIA OR ITS OFFICERS OR AGENTS SHALL NOT BE RESPONSIBLE FOR THE ACCURACY OR COMPLETENESS OF SCANNED COPIES OF THIS PLAN SHEET.

NOTE:

VERTICAL CONTROL - NGVD 29

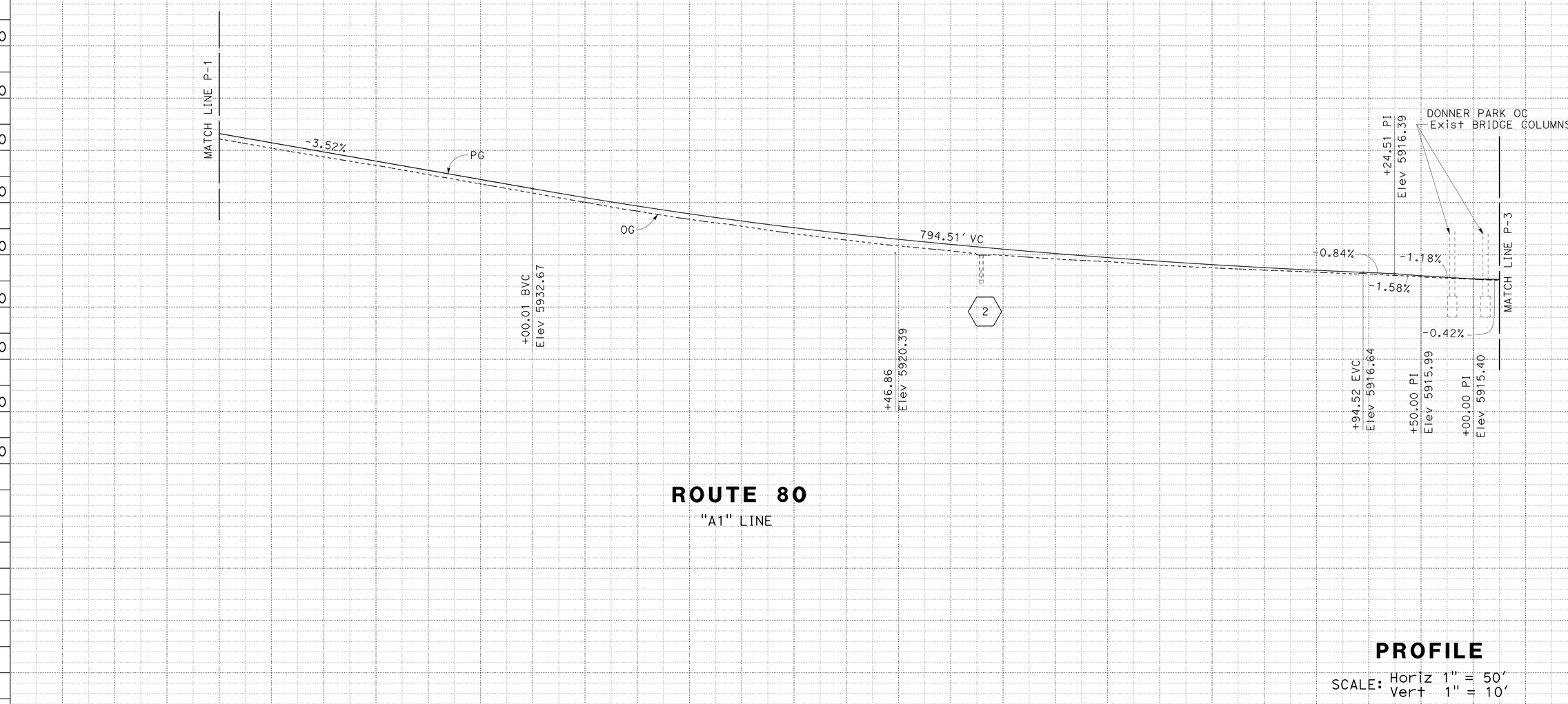

PROFILE

SCALE: Horiz 1" = 50'
Vert 1" = 10'

P-2

STATION	4	115	6	7	8	9	120	1	2	3	4	125	6	7	TOTAL
CY Exc								1,783							1,783
CY Emb								0							0

STATE OF CALIFORNIA - DEPARTMENT OF TRANSPORTATION
Caltrans
TRAFFIC

FUNCTIONAL SUPERVISOR: STEPHEN WRIGHT
CALCULATED-DESIGNED BY: A.G. CHIN
CHECKED BY: ERIC SOUZA
REVISED BY
DATE REVISED

LAST REVISION 03-27-12
DATE PLOTTED => 12-DEC-2012
TIME PLOTTED => 18:19

Dist	COUNTY	ROUTE	POST MILES TOTAL PROJECT	SHEET No.	TOTAL SHEETS
03	Nev	80	R12.3/13.3	9	28

REGISTERED CIVIL ENGINEER 9/17/12 DATE

10/15/12
PLANS APPROVAL DATE

REGISTERED PROFESSIONAL ENGINEER
ERIC NORMAN SOUZA
No. 75706
Exp. 06/30/14
CIVIL
STATE OF CALIFORNIA

THE STATE OF CALIFORNIA OR ITS OFFICERS OR AGENTS SHALL NOT BE RESPONSIBLE FOR THE ACCURACY OR COMPLETENESS OF SCANNED COPIES OF THIS PLAN SHEET.

NOTE:

VERTICAL CONTROL - NGVD 29

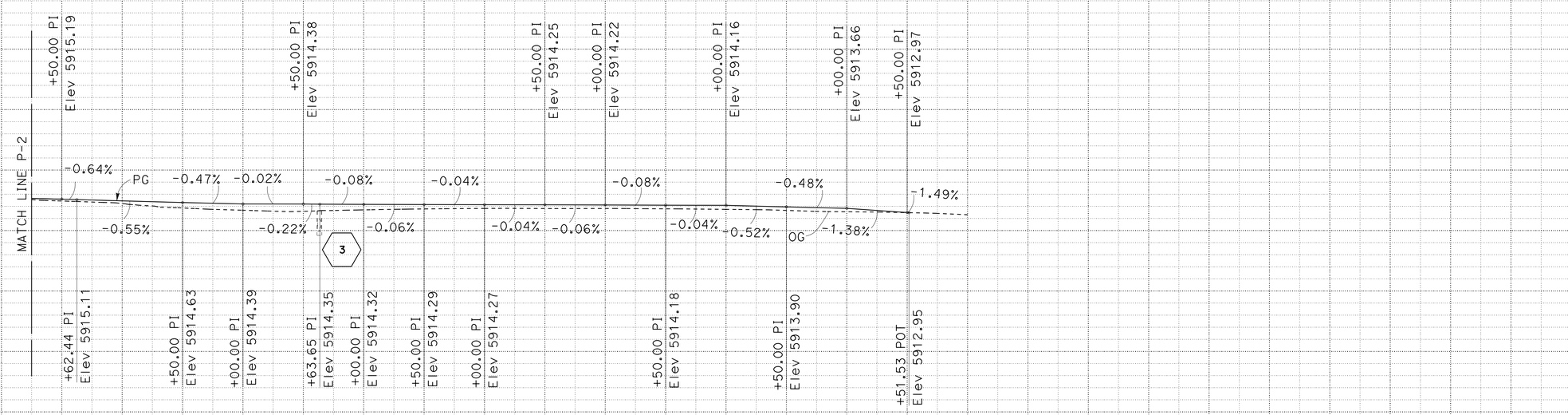

ROUTE 80

"A1" LINE

PROFILE

SCALE: Horiz 1" = 50'
Vert 1" = 10'

P-3

STATION		7	8	9	130	1	2	3	4	135	6	7	TOTAL
CY	Exc	687											687
	Emb	0											0

STATE OF CALIFORNIA - DEPARTMENT OF TRANSPORTATION
Caltrans
TRAFFIC

FUNCTIONAL SUPERVISOR: STEPHEN WRIGHT
CALCULATED-DESIGNED BY: A.G. CHIN
CHECKED BY: ERIC SOUZA
REVISED BY
DATE REVISED

LAST REVISION 03-27-12
DATE PLOTTED => 12-DEC-2012
TIME PLOTTED => 18:19

Dist	COUNTY	ROUTE	POST MILES TOTAL PROJECT	SHEET No.	TOTAL SHEETS
03	Nev	80	R12.3/13.3	10	28

REGISTERED CIVIL ENGINEER 9/17/12 DATE

10/15/12
PLANS APPROVAL DATE

REGISTERED PROFESSIONAL ENGINEER ERIC NORMAN SOUZA No. 75706 Exp. 06/30/14 CIVIL STATE OF CALIFORNIA

THE STATE OF CALIFORNIA OR ITS OFFICERS OR AGENTS SHALL NOT BE RESPONSIBLE FOR THE ACCURACY OR COMPLETENESS OF SCANNED COPIES OF THIS PLAN SHEET.

NOTES:

1. FOR DETAILS NOT SHOWN SEE STANDARD PLAN A76I.
2. PLACE 5 CHANNELIZERS (SURFACE MOUNTED) SPACED AT 50′ ALONG THE INSIDE EP OR AS DIRECTED BY THE ENGINEER.

LEGEND:

⇨ ⇦ DIRECTION OF TRAFFIC

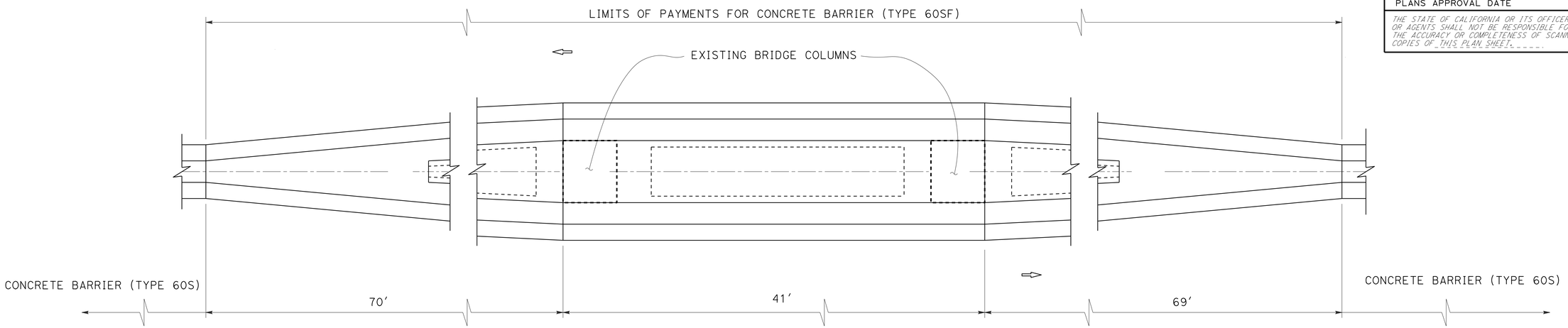

CONCRETE BARRIER (TYPE 60SF) TRANSITION AT BRIDGE COLUMNS

DONNER PARK OC

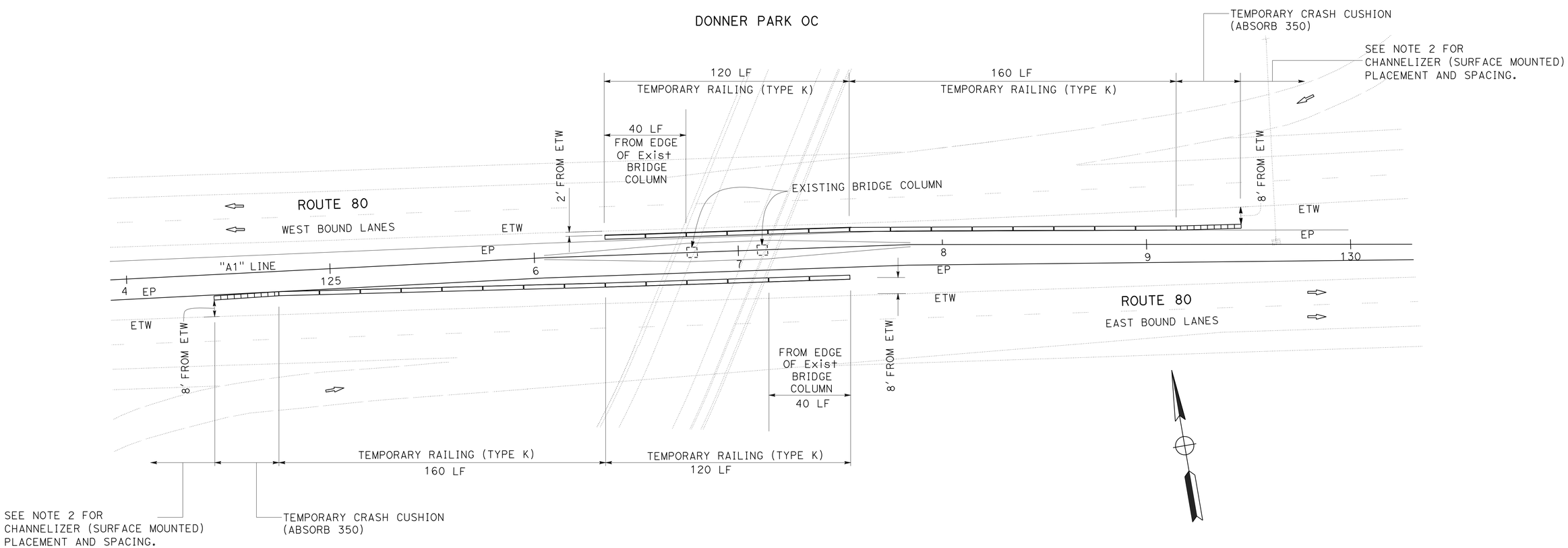

TEMPORARY RAILING (TYPE K) PLACEMENT DETAIL AT BRIDGE COLUMNS

DONNER PARK OC

CONSTRUCTION DETAILS

NO SCALE

C-1

STATE OF CALIFORNIA - DEPARTMENT OF TRANSPORTATION
Caltrans
TRAFFIC

FUNCTIONAL SUPERVISOR: STEPHEN WRIGHT
CALCULATED-DESIGNED BY: A.G. CHIN
CHECKED BY: ERIC SOUZA
REVISED BY
DATE REVISED

LAST REVISION
DATE PLOTTED => 12-DEC-2012
TIME PLOTTED => 18:19

Dist	COUNTY	ROUTE	POST MILES TOTAL PROJECT	SHEET No.	TOTAL SHEETS
03	Nev	80	R12.3/13.3	11	28

REGISTERED CIVIL ENGINEER 9/17/12 DATE

10/15/12
PLANS APPROVAL DATE

REGISTERED PROFESSIONAL ENGINEER
ERIC NORMAN SOUZA
No. 75706
Exp. 06/30/14
CIVIL
STATE OF CALIFORNIA

THE STATE OF CALIFORNIA OR ITS OFFICERS OR AGENTS SHALL NOT BE RESPONSIBLE FOR THE ACCURACY OR COMPLETENESS OF SCANNED COPIES OF THIS PLAN SHEET.

NOTES:

1. FOR CONCRETE BARRIER (TYPE 60SF) DETAILS NOT SHOWN SEE STANDARD PLAN A76I.

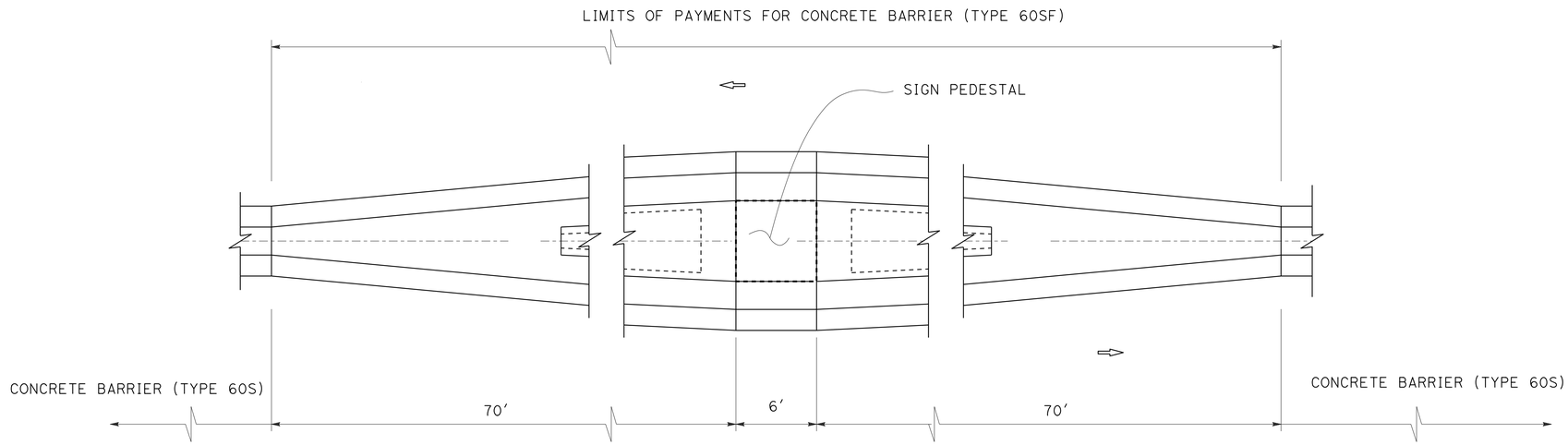

CONCRETE BARRIER (TYPE 60SF) TRANSITION AT SIGN PEDESTAL

LEGEND:

⇨ DIRECTION OF TRAFFIC

VEGETATION CONTROL (MINOR CONCRETE)

SEE Std PLANS A77C5 AND A77C10 FOR INFORMATION NOT SHOWN.

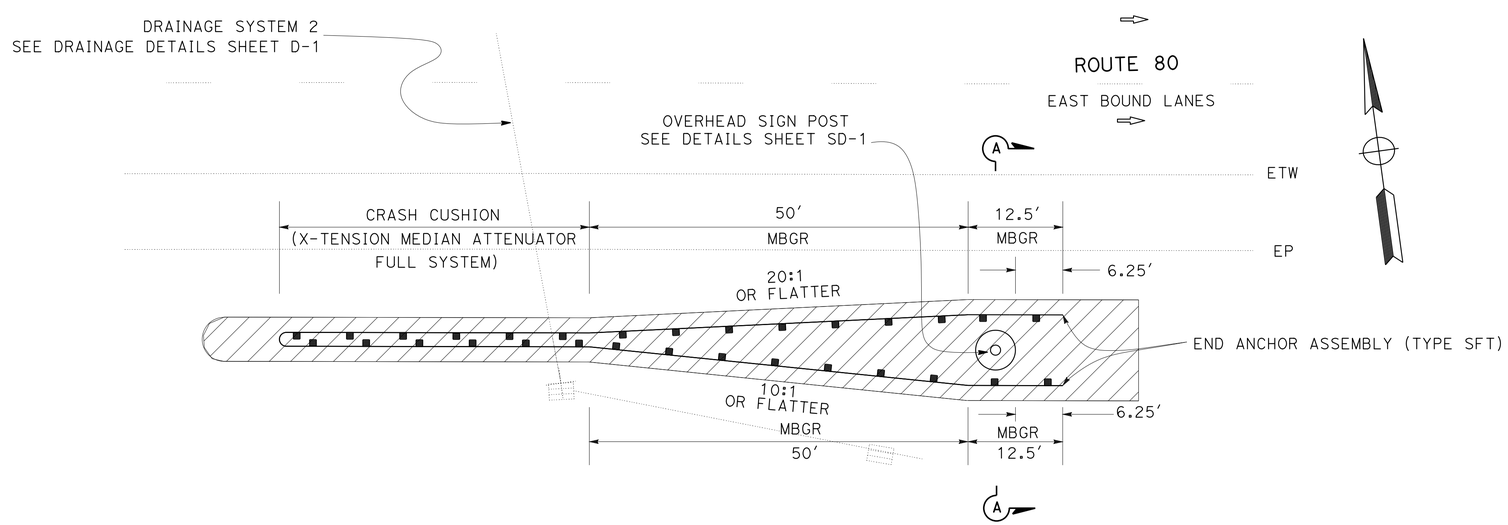

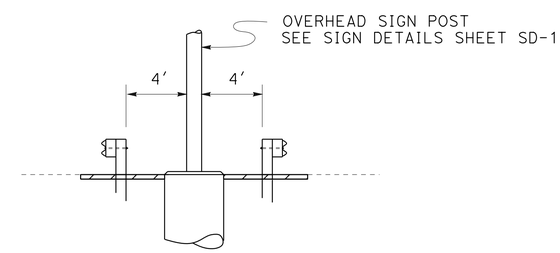

SECTION A-A

CRASH CUSHION (X-TENSION ATTENUATOR FULL SYSTEM) AND MBGR PLACEMENT AT SIGN PEDESTAL

CONSTRUCTION DETAILS

NO SCALE

C-2

REVISED BY | DATE REVISED
A.G. CHIN | ERIC SOUZA
CALCULATED-DESIGNED BY | CHECKED BY
FUNCTIONAL SUPERVISOR
STEPHEN WRIGHT

STATE OF CALIFORNIA - DEPARTMENT OF TRANSPORTATION
Caltrans
TRAFFIC

LAST REVISION 08-21-12
DATE PLOTTED => 12-DEC-2012
TIME PLOTTED => 18:19

Dist	COUNTY	ROUTE	POST MILES TOTAL PROJECT	SHEET No.	TOTAL SHEETS
03	Nev	80	R12.3/13.3	12	28

REGISTERED CIVIL ENGINEER 9/17/12 DATE

10/15/12
PLANS APPROVAL DATE

REGISTERED PROFESSIONAL ENGINEER ERIC NORMAN SOUZA No. 75706 Exp. 06/30/14 CIVIL STATE OF CALIFORNIA

THE STATE OF CALIFORNIA OR ITS OFFICERS OR AGENTS SHALL NOT BE RESPONSIBLE FOR THE ACCURACY OR COMPLETENESS OF SCANNED COPIES OF THIS PLAN SHEET.

NOTE: FOR DETAILS NOT SHOWN SEE STANDARD PLANS D73 AND D77B.

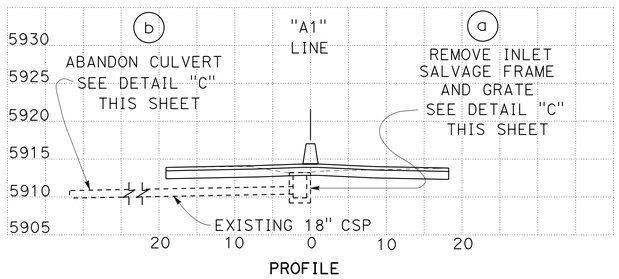

PROFILE

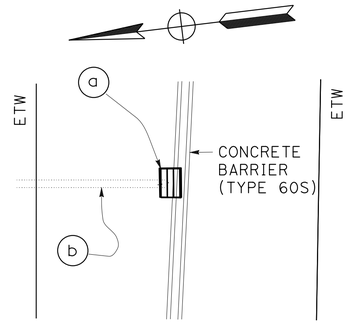

PLAN

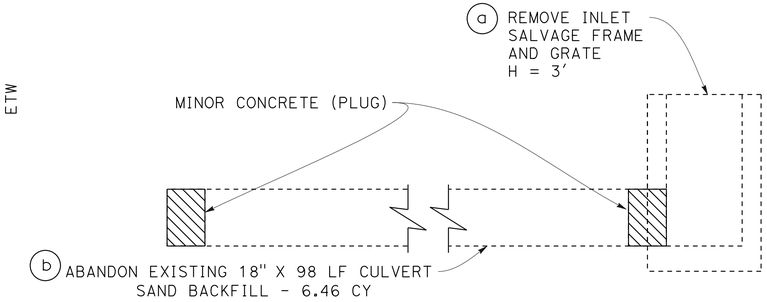

DETAIL "C"

DRAINAGE SYSTEM No. 3

"A1" 129+63.27

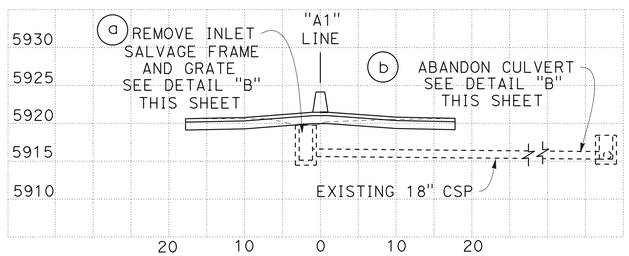

PROFILE

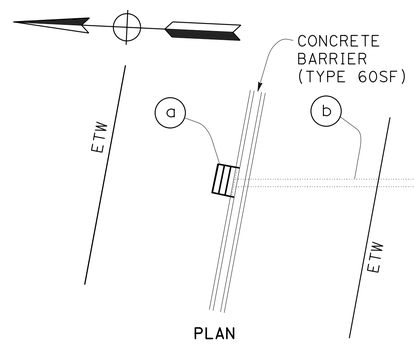

PLAN

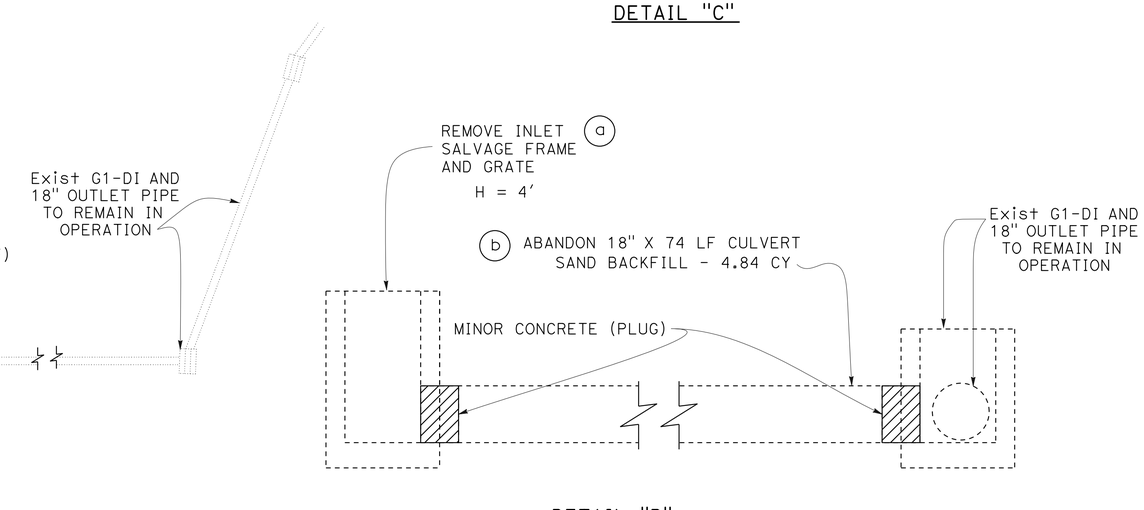

DETAIL "B"

DRAINAGE SYSTEM No. 2

"A1" 122+29.17

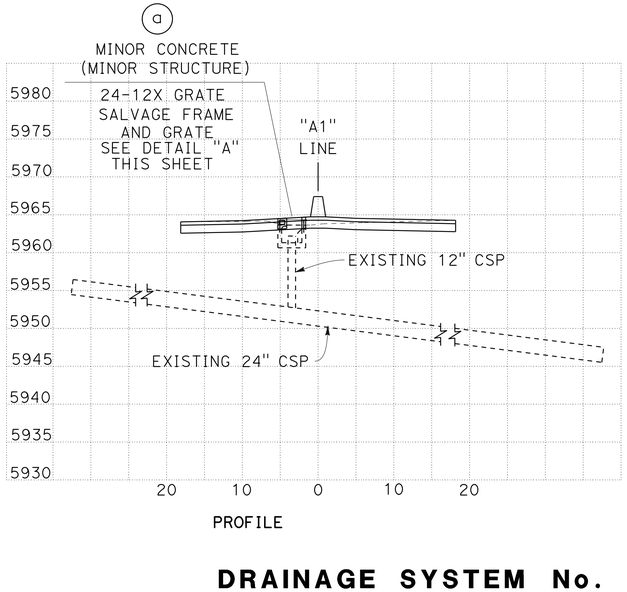

PROFILE

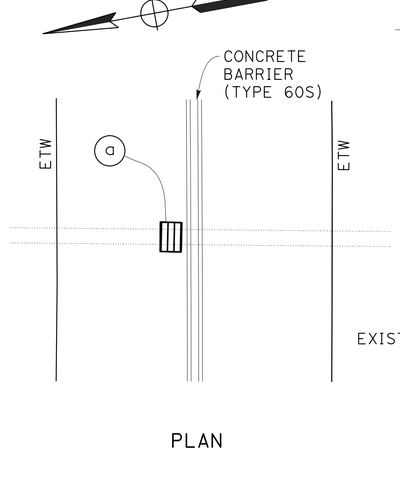

PLAN

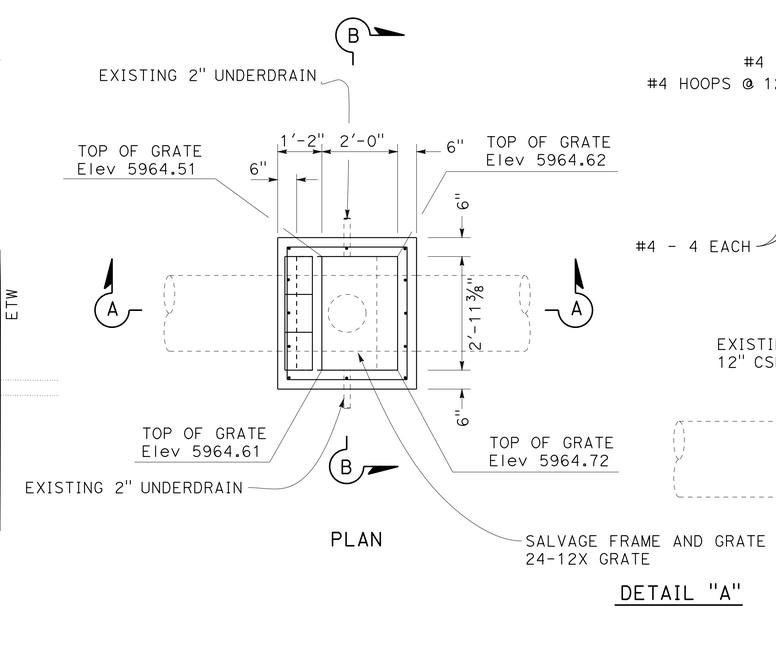

PLAN

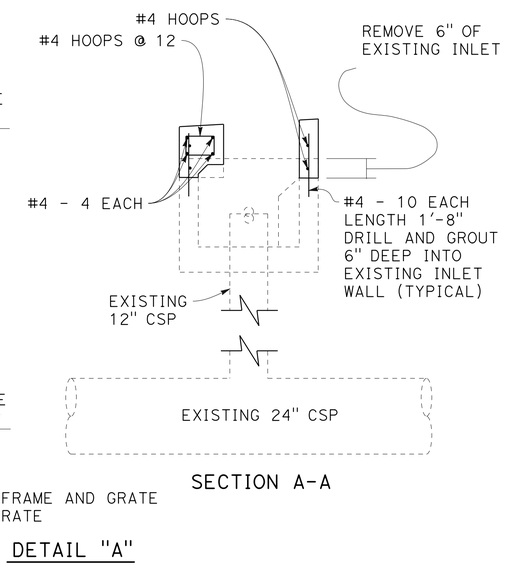

SECTION A-A

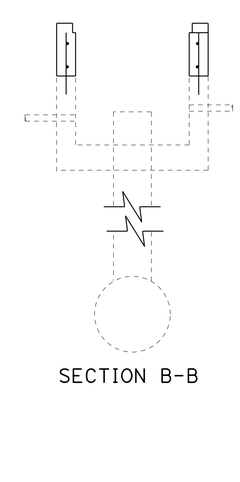

SECTION B-B

DETAIL "A"

DRAINAGE SYSTEM No. 1

3.23' Lt "A1" 108+90.16

DRAINAGE DETAILS

NO SCALE

D-1

STATE OF CALIFORNIA - DEPARTMENT OF TRANSPORTATION
Caltrans
TRAFFIC

FUNCTIONAL SUPERVISOR: STEPHEN WRIGHT
CALCULATED-DESIGNED BY: A.G. CHIN
CHECKED BY: ERIC SOUZA
REVISED BY
DATE REVISED

LAST REVISION 08-21-12
DATE PLOTTED => 12-DEC-2012
TIME PLOTTED => 18:19

Dist	COUNTY	ROUTE	POST MILES TOTAL PROJECT	SHEET No.	TOTAL SHEETS
03	Nev	80	R12.3/13.3	13	28

REGISTERED CIVIL ENGINEER 9/17/12 DATE

10/15/12
PLANS APPROVAL DATE

REGISTERED PROFESSIONAL ENGINEER ERIC NORMAN SOUZA No. 75706 Exp. 06/30/14 CIVIL STATE OF CALIFORNIA

THE STATE OF CALIFORNIA OR ITS OFFICERS OR AGENTS SHALL NOT BE RESPONSIBLE FOR THE ACCURACY OR COMPLETENESS OF SCANNED COPIES OF THIS PLAN SHEET.

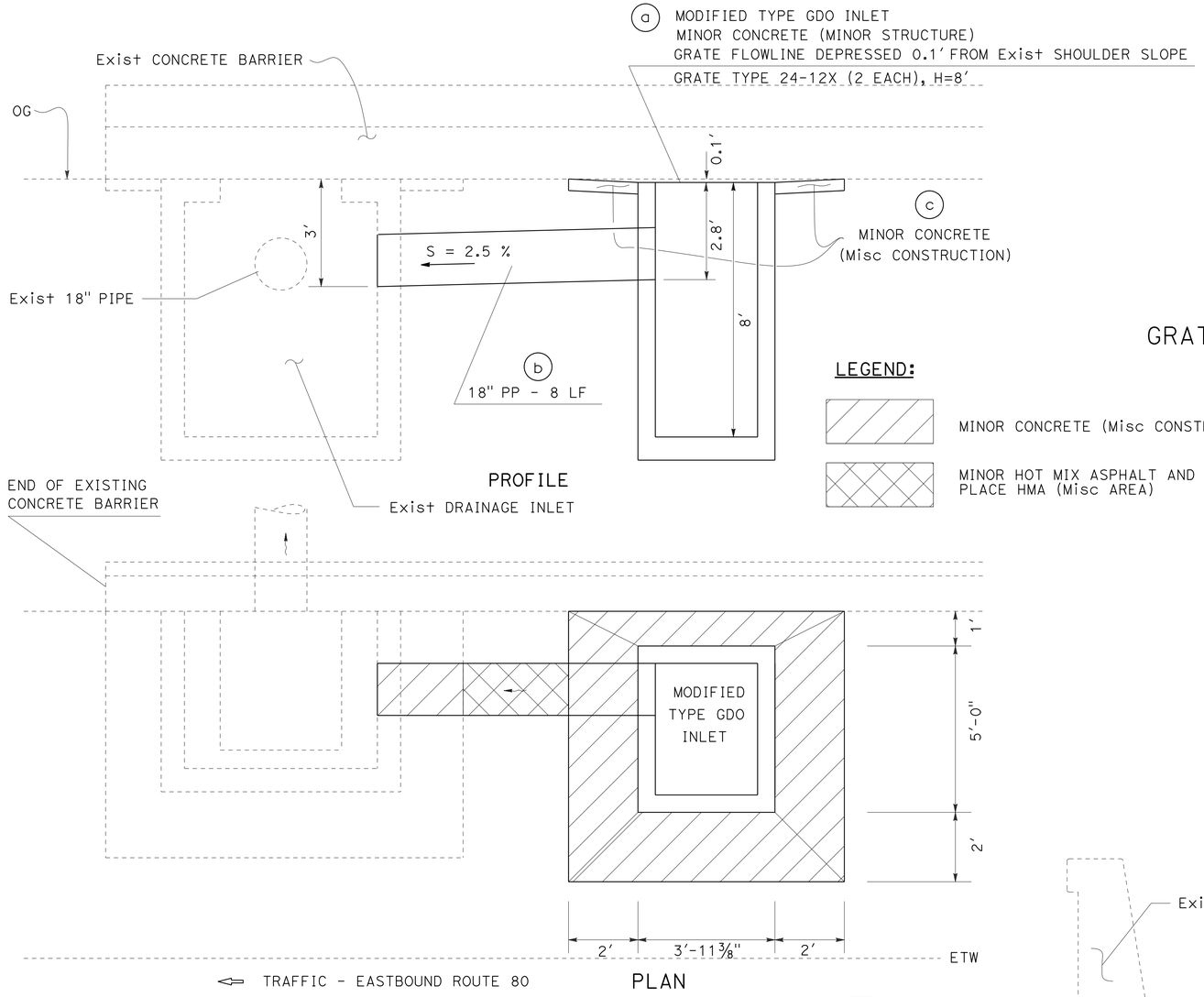

DRAINAGE SYSTEM No. 4

52′ Rt "A1" 115+60

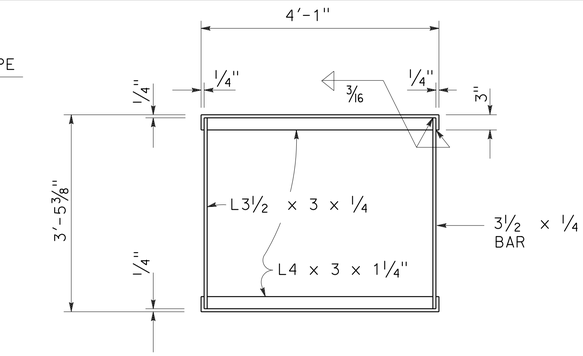

GRATE FRAME FOR MODIFIED TYPE GDO INLET

LEGEND:

- MINOR CONCRETE (Misc CONSTRUCTION)
- MINOR HOT MIX ASPHALT AND PLACE HMA (Misc AREA)

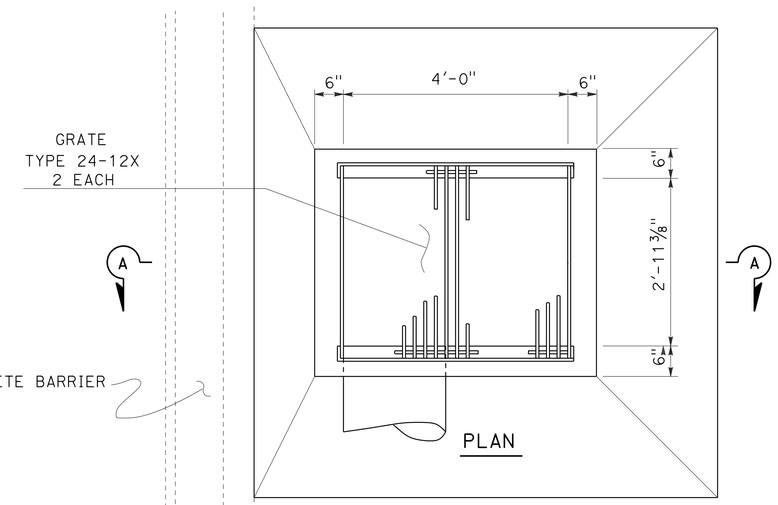

MODIFIED TYPE GDO INLET

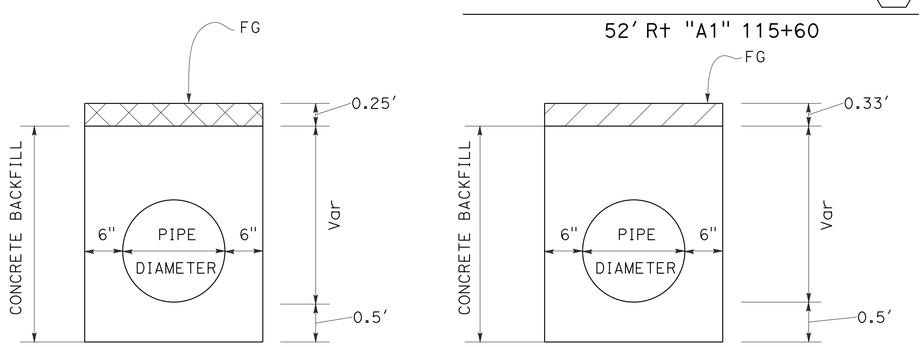

TRENCH BACKFILL DETAILS

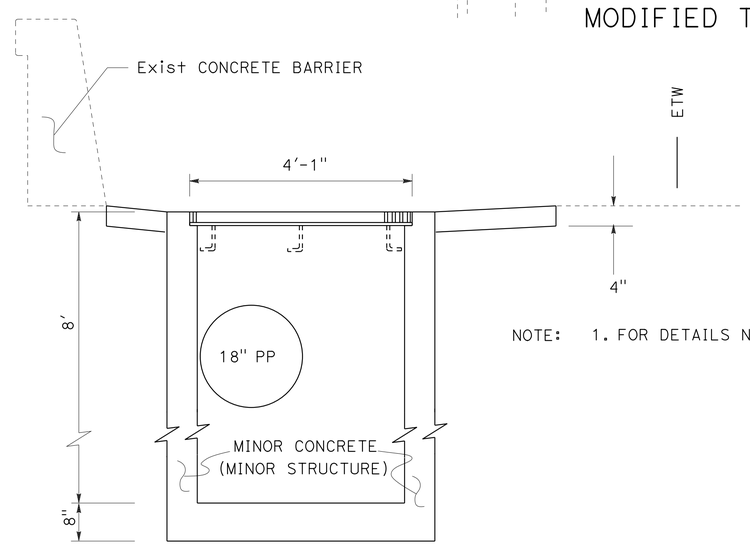

SECTION A-A

NOTE: 1. FOR DETAILS NOT SHOWN SEE STANDARD PLANS D74B AND D77B.

DRAINAGE DETAILS

NO SCALE

D-2

REVISED BY	DATE REVISED
A.G. CHIN	ERIC SOUZA
CALCULATED-DESIGNED BY	CHECKED BY
FUNCTIONAL SUPERVISOR	STEPHEN WRIGHT

STATE OF CALIFORNIA - DEPARTMENT OF TRANSPORTATION
Caltrans
TRAFFIC

LAST REVISION 8-21-12
DATE PLOTTED => 12-DEC-2012
TIME PLOTTED => 18:19

Dist	COUNTY	ROUTE	POST MILES TOTAL PROJECT	SHEET No.	TOTAL SHEETS
03	Nev	80	R12.3/13.3	14	28

Joyce K. Loftus 9/17/12
REGISTERED CIVIL ENGINEER DATE

10/15/12
PLANS APPROVAL DATE

REGISTERED PROFESSIONAL ENGINEER Joyce K. Loftus No. 38426 Exp. 3-31-13 CIVIL STATE OF CALIFORNIA

THE STATE OF CALIFORNIA OR ITS OFFICERS OR AGENTS SHALL NOT BE RESPONSIBLE FOR THE ACCURACY OR COMPLETENESS OF SCANNED COPIES OF THIS PLAN SHEET.

STATIONARY MOUNTED CONSTRUCTION AREA SIGNS

SIGN LETTER	SIGN CODE FEDERAL	SIGN CODE CALIFORNIA	PANEL SIZE	SIGN MESSAGE	NUMBER OF POST AND SIZE	NUMBER OF SIGNS
A	W20-1	C23	60" x 60"	ROAD WORK AHEAD	2 - 4" x 6"	2
B		C40(Mod)	96" x 60"	TRAFFIC FINES DOUBLED IN WORK ZONES	2 - 6" x 6"	2
C	W20-1	C23	48" x 48"	ROAD WORK AHEAD	1 - 6" x 6"	2
D	G20-2	C14	36" x 18"	END ROAD WORK	1 - 4" x 4"	2
E	G20-2	C14	48" x 24"	END ROAD WORK	1 - 4" x 6"	2

NOTES:

1. EXACT SIGN LOCATION TO BE DETERMINED BY THE ENGINEER.

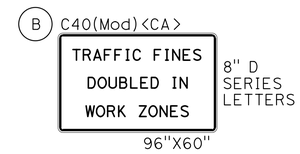

RETROREFLECTIVE WHITE BACKGROUND WITH BLACK LEGEND AND BORDERS.

SIGN DETAILS

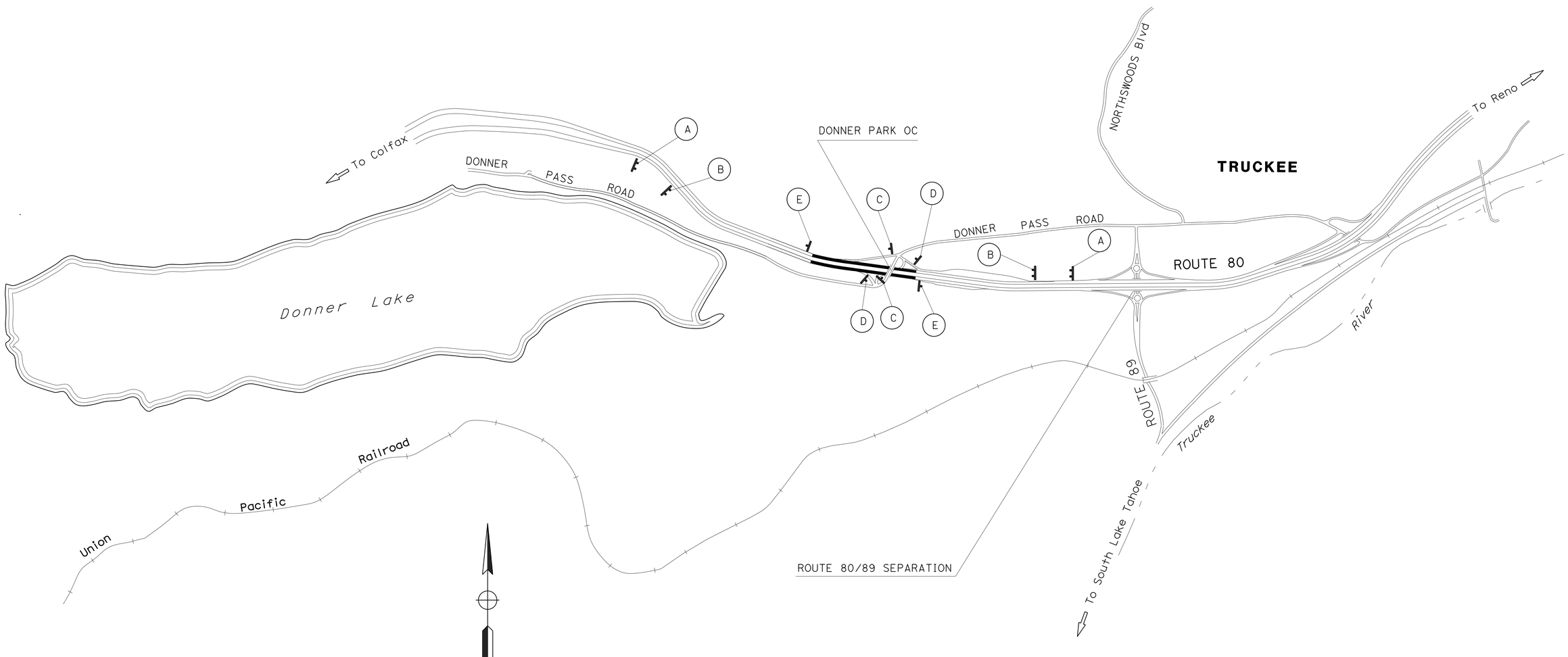

APPROVED FOR CONSTRUCTION AREA SIGN WORK ONLY

CONSTRUCTION AREA SIGNS

NO SCALE

CS-1

STATE OF CALIFORNIA - DEPARTMENT OF TRANSPORTATION
Caltrans
TRAFFIC

FUNCTIONAL SUPERVISOR: ARSHAD IQBAL
CALCULATED-DESIGNED BY: JOYCE LOFTUS
CHECKED BY: JOYCE LOFTUS
REVISED BY
DATE REVISED

LAST REVISION 9-12-10
DATE PLOTTED => 12-DEC-2012
TIME PLOTTED => 18:19

Dist	COUNTY	ROUTE	POST MILES TOTAL PROJECT	SHEET No.	TOTAL SHEETS
03	Nev	80	R12.3/13.3	15	28

Joyce K. Loftus 9/17/12
REGISTERED CIVIL ENGINEER DATE

10/15/12
PLANS APPROVAL DATE

REGISTERED PROFESSIONAL ENGINEER
Joyce K. Loftus
No. 38426
Exp. 3-31-13
CIVIL
STATE OF CALIFORNIA

THE STATE OF CALIFORNIA OR ITS OFFICERS OR AGENTS SHALL NOT BE RESPONSIBLE FOR THE ACCURACY OR COMPLETENESS OF SCANNED COPIES OF THIS PLAN SHEET.

LEGEND

No.	PAVEMENT DELINEATION DETAIL NUMBER
●→	CONCRETE BARRIER DELINEATOR
ıL→	OBJECT MARKER (TYPE L-1)
No.	OVERHEAD SIGN NUMBER
<CA>	CALIFORNIA SIGN CODE

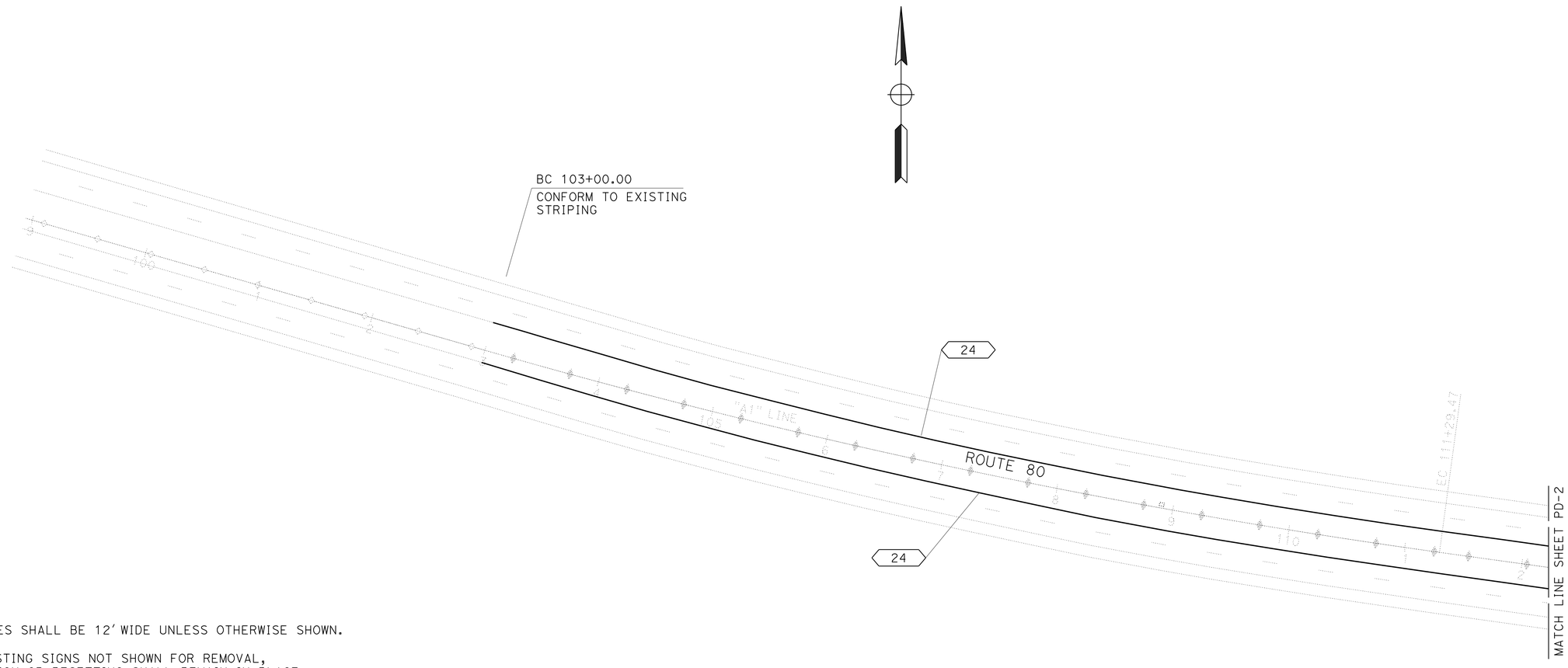

NOTES:

1. ALL LANES SHALL BE 12' WIDE UNLESS OTHERWISE SHOWN.
2. ALL EXISTING SIGNS NOT SHOWN FOR REMOVAL, RELOCATION OR RESETTING SHALL REMAIN IN PLACE.
3. ALL SIGN CODES SHOWN ARE FEDERAL SIGN CODES UNLESS OTHERWISE DESIGNATED AS CALIFORNIA SIGN CODES.

PAVEMENT DELINEATION AND SIGN PLAN

SCALE: 1"=50'

PD-1

APPROVED FOR PAVEMENT DELINEATION AND SIGN WORK ONLY

STATE OF CALIFORNIA - DEPARTMENT OF TRANSPORTATION
Caltrans
TRAFFIC

FUNCTIONAL SUPERVISOR: ARSHAD IQBAL
CALCULATED-DESIGNED BY: JOYCE LOFTUS
CHECKED BY:
REVISED BY:
DATE REVISED:

LAST REVISION 9-12-12
DATE PLOTTED => 12-DEC-2012
TIME PLOTTED => 18:19

Dist	COUNTY	ROUTE	POST MILES TOTAL PROJECT	SHEET No.	TOTAL SHEETS
03	Nev	80	R12.3/13.3	16	28

Joyce K. Loftus 9/17/12
REGISTERED CIVIL ENGINEER DATE

10/15/12
PLANS APPROVAL DATE

REGISTERED PROFESSIONAL ENGINEER
Joyce K. Loftus
No. 38426
Exp. 3-31-13
CIVIL
STATE OF CALIFORNIA

THE STATE OF CALIFORNIA OR ITS OFFICERS OR AGENTS SHALL NOT BE RESPONSIBLE FOR THE ACCURACY OR COMPLETENESS OF SCANNED COPIES OF THIS PLAN SHEET.

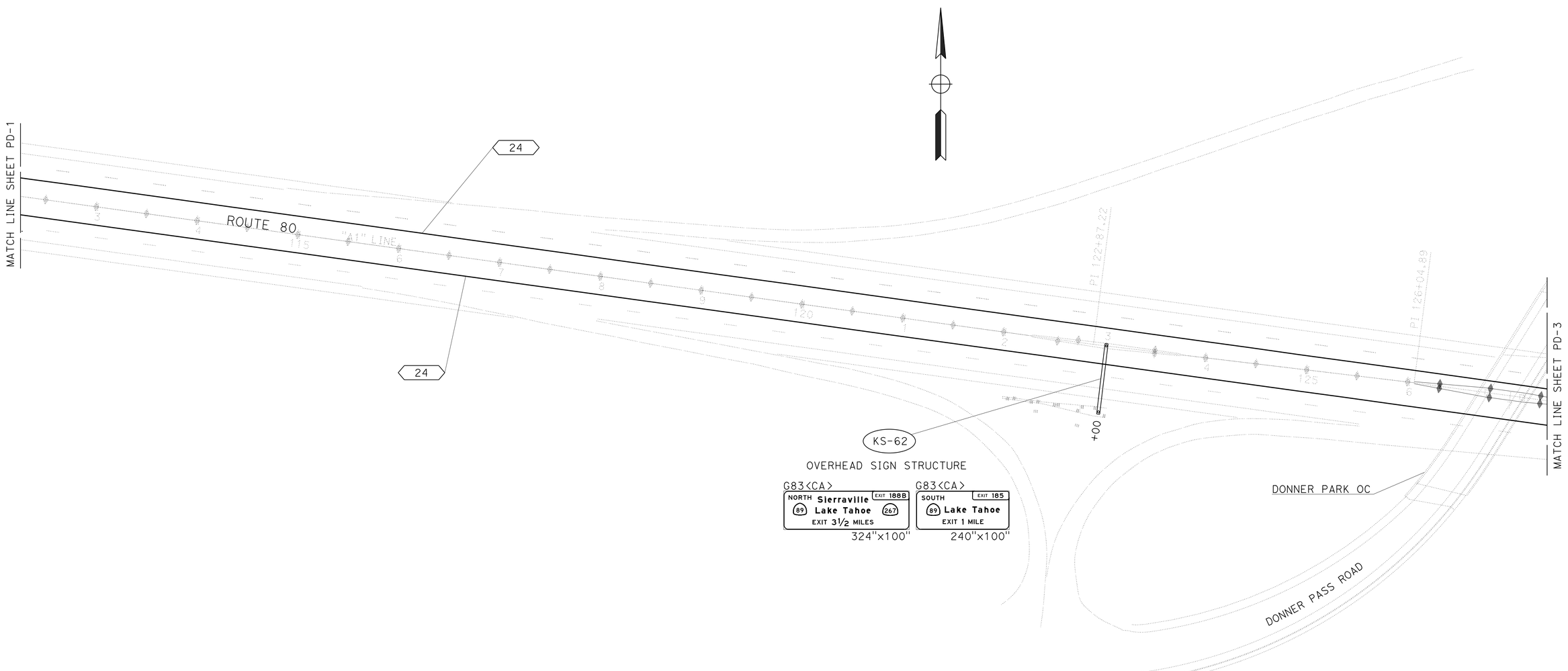

PAVEMENT DELINEATION AND SIGN PLAN

SCALE: 1"=50'

PD-2

APPROVED FOR PAVEMENT DELINEATION AND SIGN WORK ONLY

STATE OF CALIFORNIA - DEPARTMENT OF TRANSPORTATION
Caltrans®
TRAFFIC

FUNCTIONAL SUPERVISOR: ARSHAD IQBAL

CALCULATED-DESIGNED BY: JOYCE LOFTUS
CHECKED BY: JOYCE LOFTUS

REVISED BY
DATE REVISED

LAST REVISION 9-12-12
DATE PLOTTED => 12-DEC-2012
TIME PLOTTED => 18:19

Dist	COUNTY	ROUTE	POST MILES TOTAL PROJECT	SHEET No.	TOTAL SHEETS
03	Nev	80	R12.3/13.3	17	28

Joyce K. Loftus 9/17/12
REGISTERED CIVIL ENGINEER DATE

10/15/12
PLANS APPROVAL DATE

REGISTERED PROFESSIONAL ENGINEER
Joyce K. Loftus
No. 38426
Exp. 3-31-13
CIVIL
STATE OF CALIFORNIA

THE STATE OF CALIFORNIA OR ITS OFFICERS OR AGENTS SHALL NOT BE RESPONSIBLE FOR THE ACCURACY OR COMPLETENESS OF SCANNED COPIES OF THIS PLAN SHEET.

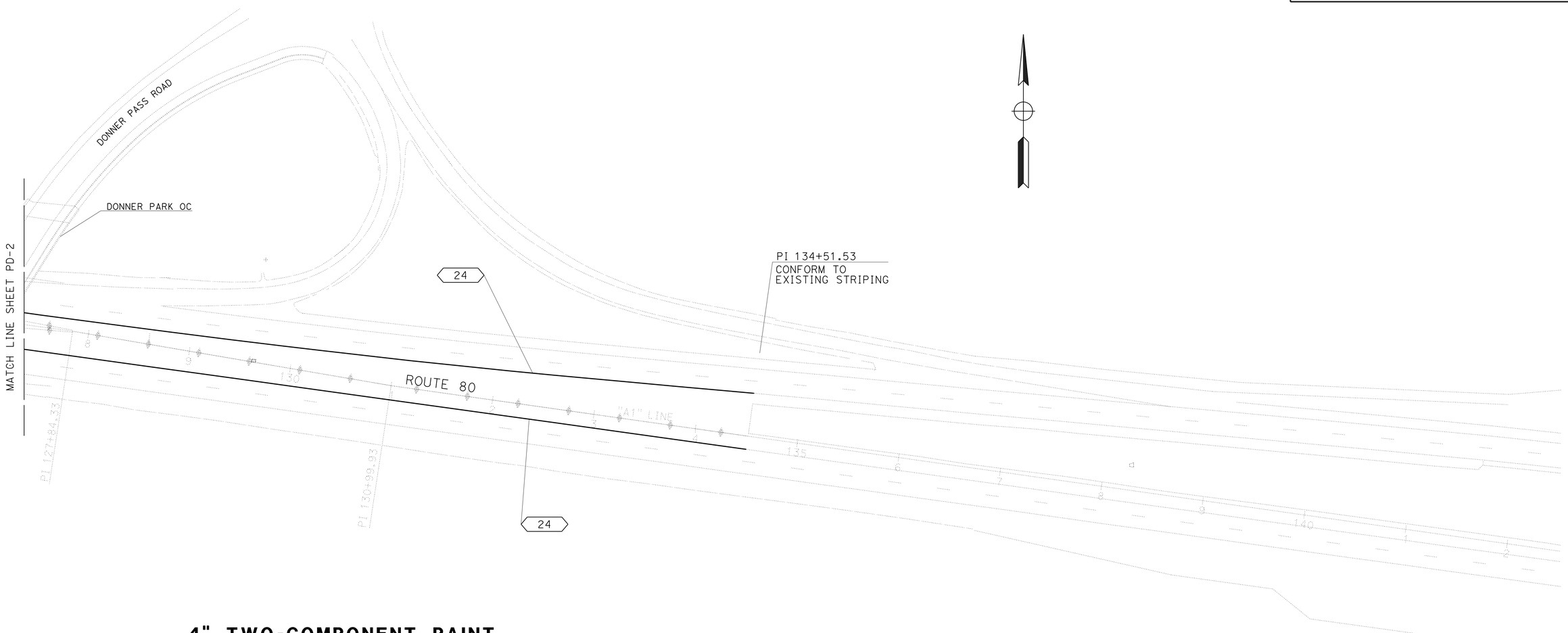

4" TWO-COMPONENT PAINT TRAFFIC STRIPE

DETAIL NUMBER	LINEAR FEET
24	6,304
TOTAL	6,304

PAVEMENT DELINEATION AND SIGN PLAN AND PAVEMENT DELINEATION QUANTITIES

SCALE: 1"=50'

PD-3

APPROVED FOR PAVEMENT DELINEATION AND SIGN WORK ONLY

STATE OF CALIFORNIA - DEPARTMENT OF TRANSPORTATION
Caltrans
TRAFFIC

FUNCTIONAL SUPERVISOR: ARSHAD IQBAL
CALCULATED-DESIGNED BY: JOYCE LOFTUS
CHECKED BY:
REVISED BY
DATE REVISED

LAST REVISION 9-12-12
DATE PLOTTED => 12-DEC-2012
TIME PLOTTED => 18:19

Dist	COUNTY	ROUTE	POST MILES TOTAL PROJECT	SHEET No.	TOTAL SHEETS
03	Nev	80	R12.3/13.3	18	28

Joyce K. Loftus 9/17/12
REGISTERED CIVIL ENGINEER DATE

10/15/12
PLANS APPROVAL DATE

REGISTERED PROFESSIONAL ENGINEER
Joyce K. Loftus
No. 38426
Exp. 3-31-13
CIVIL
STATE OF CALIFORNIA

THE STATE OF CALIFORNIA OR ITS OFFICERS OR AGENTS SHALL NOT BE RESPONSIBLE FOR THE ACCURACY OR COMPLETENESS OF SCANNED COPIES OF THIS PLAN SHEET.

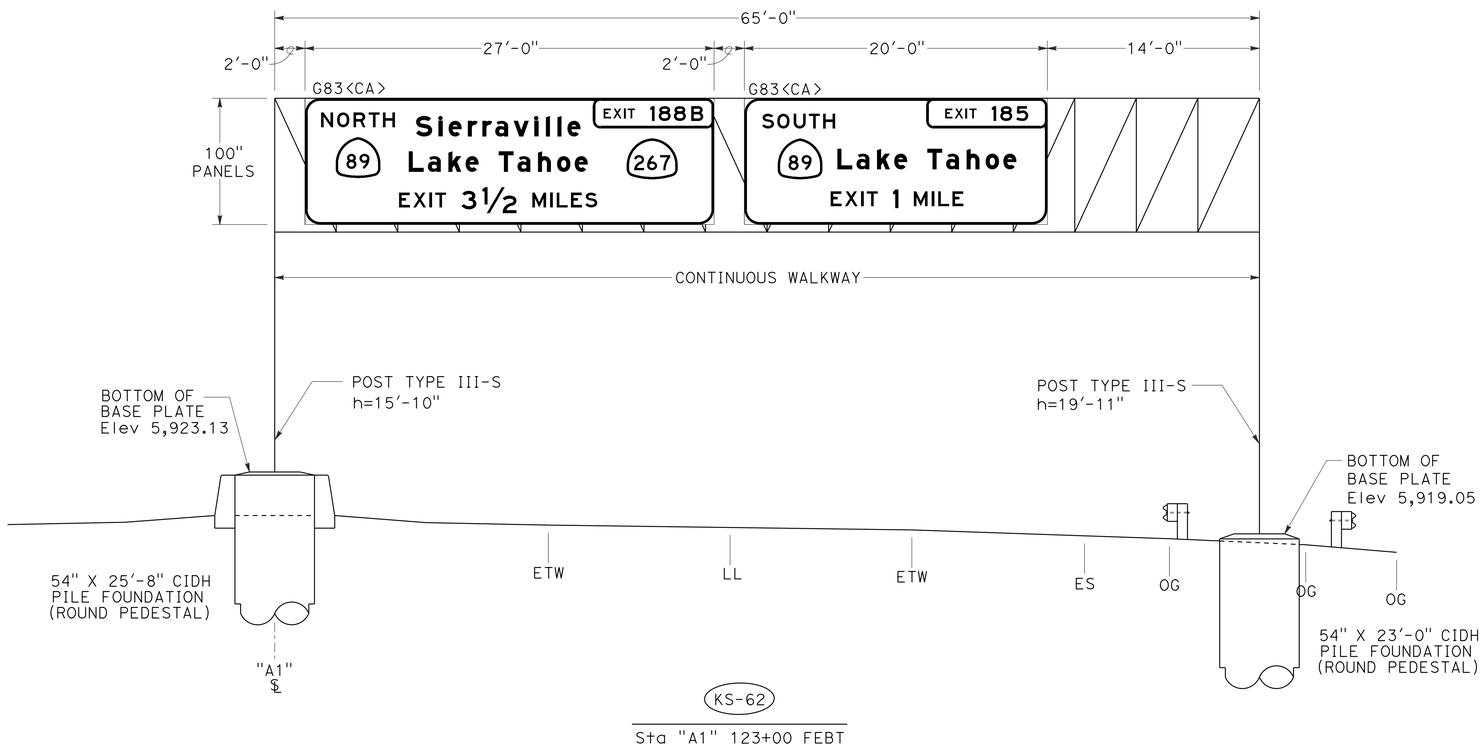

SIGN DETAILS

NO SCALE

SD-1

APPROVED FOR SIGN WORK ONLY

STATE OF CALIFORNIA - DEPARTMENT OF TRANSPORTATION
Caltrans®
TRAFFIC

FUNCTIONAL SUPERVISOR: ARSHAD IQBAL
CALCULATED-DESIGNED BY: JACK KEMMERLY
CHECKED BY: JOYCE LOFTUS
REVISED BY
DATE REVISED

LAST REVISION 9-10-12
DATE PLOTTED => 12-DEC-2012
TIME PLOTTED => 18:19

Dist	COUNTY	ROUTE	POST MILES TOTAL PROJECT	SHEET No.	TOTAL SHEETS
03	Nev	80	R12.3/13.3	19	28

REGISTERED CIVIL ENGINEER 9/17/12 DATE

10/15/12
PLANS APPROVAL DATE

REGISTERED PROFESSIONAL ENGINEER Joyce K. Loftus No. 38426 Exp. 3-31-13 CIVIL STATE OF CALIFORNIA

THE STATE OF CALIFORNIA OR ITS OFFICERS OR AGENTS SHALL NOT BE RESPONSIBLE FOR THE ACCURACY OR COMPLETENESS OF SCANNED COPIES OF THIS PLAN SHEET.

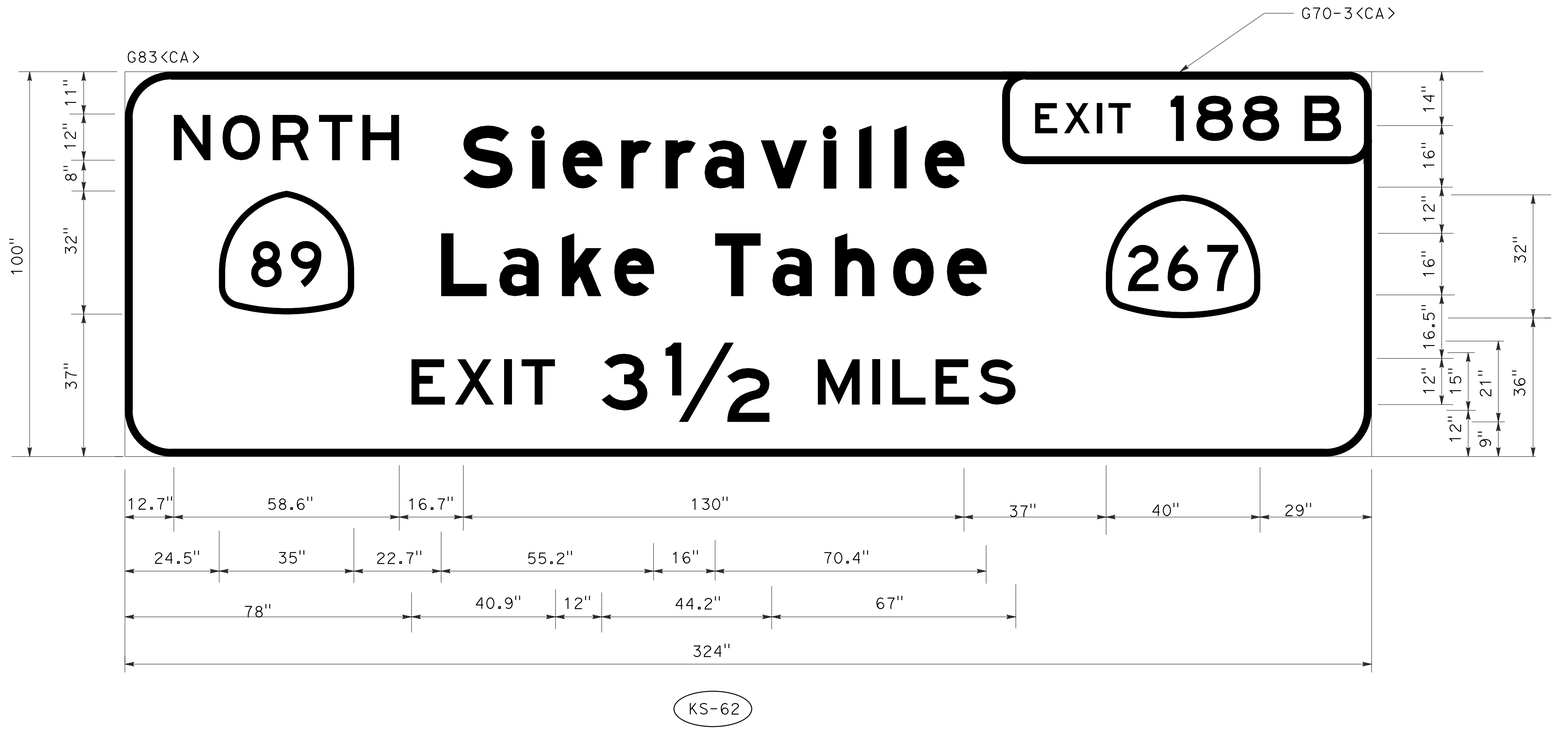

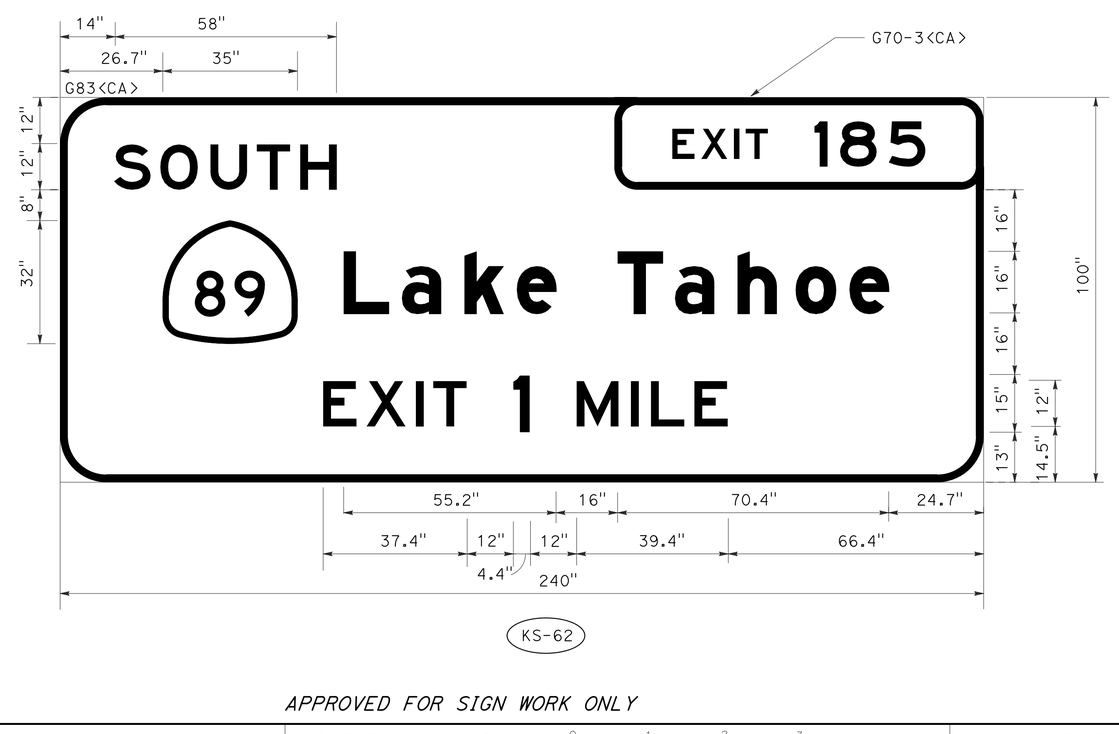

SIGN DETAILS

NO SCALE

SD-2

APPROVED FOR SIGN WORK ONLY

STATE OF CALIFORNIA - DEPARTMENT OF TRANSPORTATION
Caltrans
TRAFFIC

FUNCTIONAL SUPERVISOR: ARSHAD IQBAL
CALCULATED-DESIGNED BY: JOYCE LOFTUS
CHECKED BY:
REVISED BY:
DATE REVISED:

LAST REVISION 9-12-12
DATE PLOTTED => 12-DEC-2012
TIME PLOTTED => 18:19

Dist	COUNTY	ROUTE	POST MILES TOTAL PROJECT	SHEET No.	TOTAL SHEETS
03	Nev	80	R12.3/13.3	20	28

Joyce K Loftus 9/17/12
REGISTERED CIVIL ENGINEER DATE

10/15/12
PLANS APPROVAL DATE

REGISTERED PROFESSIONAL ENGINEER Joyce K. Loftus No. 38426 Exp. 3-31-13 CIVIL STATE OF CALIFORNIA

THE STATE OF CALIFORNIA OR ITS OFFICERS OR AGENTS SHALL NOT BE RESPONSIBLE FOR THE ACCURACY OR COMPLETENESS OF SCANNED COPIES OF THIS PLAN SHEET.

OVERHEAD SIGN QUANTITIES

SIGN NUMBER ⬭	FURNISH SIGN STRUCTURE (TRUSS)	INSTALL SIGN STRUCTURE (TRUSS)	54" CIDH CONCRETE PILE (SIGN FOUNDATION)
	LB	LB	LF
KS-62	24,891	24,891	25'-8"
			23'-0"
TOTAL	24,891	24,891	48'-8"

OVERHEAD SIGN PANEL QUANTITIES

SIGN NUMBER	SIGN CODE	PANEL SIZE L x D	PANEL AREA	NUMBER OF PANELS	BACKGROUND		LEGEND		PROTECTIVE OVERLAY	FURNISH LAMINATED PANEL SIGN (1"-TYPE A)	REMARKS
					SHEETING COLOR	RETROREFLECTIVE ASTM TYPE	SHEETING COLOR	RETROREFLECTIVE ASTM TYPE	PREMIUM		
	CALIFORNIA	INCHES	SQFT							SQFT	
KS-62	G83	324" x 100"	225.00	1	GREEN	IV	WHITE	IX	X	225.00	G28-1(89)<CA> ROUTE SHIELD G28-1(267)<CA> ROUTE SHIELD
KS-62	G83	240" x 100"	166.67	1	GREEN	IV	WHITE	IX	X	166.67	G28-1(89)<CA> ROUTE SHIELD
TOTAL										391.67	

NOTES:

1. FOR "SIGN MESSAGE/DESCRIPTION" INFORMATION, SEE SIGN PLANS AND SIGN DETAILS.

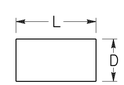

L = LENGTH OF PANEL
D = DEPTH OF PANEL

SIGN QUANTITIES

NO SCALE

SQ-1

STATE OF CALIFORNIA - DEPARTMENT OF TRANSPORTATION
Caltrans
TRAFFIC

FUNCTIONAL SUPERVISOR: ARSHAD IQBAL
CALCULATED-DESIGNED BY: JOYCE LOFTUS
CHECKED BY: JOYCE LOFTUS
REVISED BY
DATE REVISED

LAST REVISION 9-12-12
DATE PLOTTED => 12-DEC-2012
TIME PLOTTED => 18:19

Dist	COUNTY	ROUTE	POST MILES TOTAL PROJECT	SHEET No.	TOTAL SHEETS
03	Nev	80	R12.3/13.3	21	28

REGISTERED CIVIL ENGINEER 9/17/12 DATE

10/15/12
PLANS APPROVAL DATE

REGISTERED PROFESSIONAL ENGINEER ERIC NORMAN SOUZA No. 75706 Exp. 06/30/14 CIVIL STATE OF CALIFORNIA

THE STATE OF CALIFORNIA OR ITS OFFICERS OR AGENTS SHALL NOT BE RESPONSIBLE FOR THE ACCURACY OR COMPLETENESS OF SCANNED COPIES OF THIS PLAN SHEET.

ROADWAY QUANTITIES

STATION	ROADWAY EXCAVATION	HOT MIX ASPHALT (TYPE A)	CLASS 2 AGGREGATE BASE	MINOR HOT MIX ASPHALT	PLACE HOT MIX ASPHALT (MISCELLANEOUS AREA)	CONCRETE BARRIER TYPE 60S	CONCRETE BARRIER TYPE 60SF	REMOVE CONCRETE BARRIER	REMOVE CRASH CUSHION	SALVAGE CRASH CUSHION (N)	TEMPORARY CRASH CUSHION (ABSORB 350) *	TEMPORARY RAILING (TYPE K)	CRASH CUSHION (X-TENSION MEDIAN ATTENUATOR FULL SYSTEM) *	MBGR	END ANCHOR ASSEMBLY (TYPE SFT)	VEGETATION CONTROL (MINOR CONCRETE)	TACK COAT	CHANNELIZER (SURFACE MOUNTED)
	CY	TON	CY	TON	SQYD	LF		LF	EA	EA	EA	LF	EA	LF	EA	SQYD	TON	EA
"A1" 103+00.00 TO "A1" 134+51.53	4,260	3,810	4,040														11	
"A1" 103+00.00									1	1								
R+ "A1"115+60.00				0.2	0.8													
"A1"126+00.00									1									
"A1"127+70.00									1									
L+ "A1" 126+35.00 TO L+ "A1"129+46.83											1	280						
R+ "A1"124+74.00 TO R+ "A1"127+85.83											1	280						
"A1"103+00.00 TO"A1"122+27.00						1,927												
"A1"122+27.00 TO "A1" 123+73.19							146											
"A1"123+73.19 TO "A1" 126+04.89						232												
"A1"126+04.89 TO "A1" 127+84.33							180											
"A1"126+19.84 TO "A1"127+62.40								143										
"A1"127+84.33 TO "A1"134+51.53						667												
"A1"122+06.28 TO "A1"123+08.77													1	125	2	122		
L+ "A1" 130+00.00 TO L+ "A1"134+51.53				59.8	249.2													
R+ "A1"122+24.00 TO R+ "A1"124+74.00																		5
L+ "A1"129+46.83 TO L+ "A1"131+96.83																		5
TOTAL	4,260	3,810	4,040	60	250	2,826	326	143	3	1	2	560	1	125	2	122	11	10

(N) FOR INFORMATION ONLY, NOT A SEPARATE PAY ITEM.
* TEMPORARY CRASH CUSHION (ABSORB 350) AND EXISTING CRASH CUSHION AT STATION 103+00 ARE TO BE SALVAGED AS DESCRIBED IN THE SPECIAL PROVISIONS.

DRAINAGE QUANTITIES

⬡ DRAINAGE SYSTEM No.	○ DRAINAGE UNIT	MINOR CONCRETE (MINOR STRUCTURE)	MISCELLANEOUS IRON AND STEEL	TYPE 24-12X GRATE (N)	SALVAGE FRAME AND GRATE (N)	REMOVE INLET	ABANDON CULVERT	SAND BACKFILL	MINOR CONCRETE (Misc CONSTRUCTION)	CONCRETE BACKFILL	18" PLASTIC PIPE *	MINOR HOT MIX ASPHALT **	PLACE HOT MIX ASPHALT ** (MISCELLANEOUS AREA)	MODIFIED TYPE GDO INLET (N)
		CY	LB	EA	EA	EA	EA	CY	CY	CY	LF	TON	SQYD	EA
1	a	0.44	239	1	1									
2	a				1	1								
	b						1	4.84						
3	a				1	1								
	b						1	6.46						
4	a	2.82	478	2										1
	b								0.63	1.56	8	0.20	0.8	
	c													
TOTAL		3.26	717	3	3	2	2	11.30	0.63	1.56	8	0.20	0.8	1

(N) FOR INFORMATION ONLY, NOT A SEPARATE PAY ITEM.
* PLASTIC PIPE MUST HAVE SMOOTH INTERIOR.
** QUANTITY INCLUDED IN ROADWAY QUANTITIES.

TEMPORARY WATER POLLUTION CONTROL QUANTITIES

	RAIN EVENT ACTION PLAN	STORM WATER ANNUAL REPORT	STORM WATER SAMPLING AND ANALYSIS DAY	TEMPORARY DRAINAGE INLET PROTECTION
	EA			
TOTAL	4	1	4	7

SUMMARY OF QUANTITIES

Q-1

REVISED BY | DATE REVISED
A.G. CHIN | ERIC SOUZA
CALCULATED-DESIGNED BY | CHECKED BY
FUNCTIONAL SUPERVISOR: STEPHEN WRIGHT
STATE OF CALIFORNIA - DEPARTMENT OF TRANSPORTATION
Caltrans TRAFFIC

LAST REVISION 08-21-12 | DATE PLOTTED => 12-DEC-2012 | TIME PLOTTED => 18:19

Dist	COUNTY	ROUTE	POST MILES TOTAL PROJECT	SHEET No.	TOTAL SHEETS
03	Nev	80	R12.3/13.3	22	28

H. Golban 9/18/12
REGISTERED ELECTRICAL ENGINEER DATE

10/15/12
PLANS APPROVAL DATE

REGISTERED PROFESSIONAL ENGINEER HABIB GOLBAN No. E17928 Exp. 09-30-14 ELECTRICAL STATE OF CALIFORNIA

THE STATE OF CALIFORNIA OR ITS OFFICERS OR AGENTS SHALL NOT BE RESPONSIBLE FOR THE ACCURACY OR COMPLETENESS OF SCANNED COPIES OF THIS PLAN SHEET.

NOTE:

FOR ACCURATE RIGHT OF WAY DATA, CONTACT
RIGHT OF WAY ENGINEERING AT THE DISTRICT OFFICE.

PROJECT NOTES (THIS SHEET ONLY):

1. APPROXIMATELY 220′ TO Exist TYPE III-AF SERVICE EQUIPMENT ENCLOSURE, ctid No. 03170800013210.
   EXISTING LOAD: 1-400 W TMS
   1-200 W HIGHWAY LIGHTING
   5-310 W HIGHWAY LIGHTING
   2-175 W SIGN LIGHTING
   1-300 W EMS
   1-3200 W CMS

   MODIFIED LOAD: 1-400 W TMS
   1-200 W HIGHWAY LIGHTING
   5-310 W HIGHWAY LIGHTING
   6-85 W SIGN LIGHTING
   1-300 W EMS
   1-3200 W CMS
2. APPROXIMATELY 135′ TO Exist TYPE 332 CABINET.

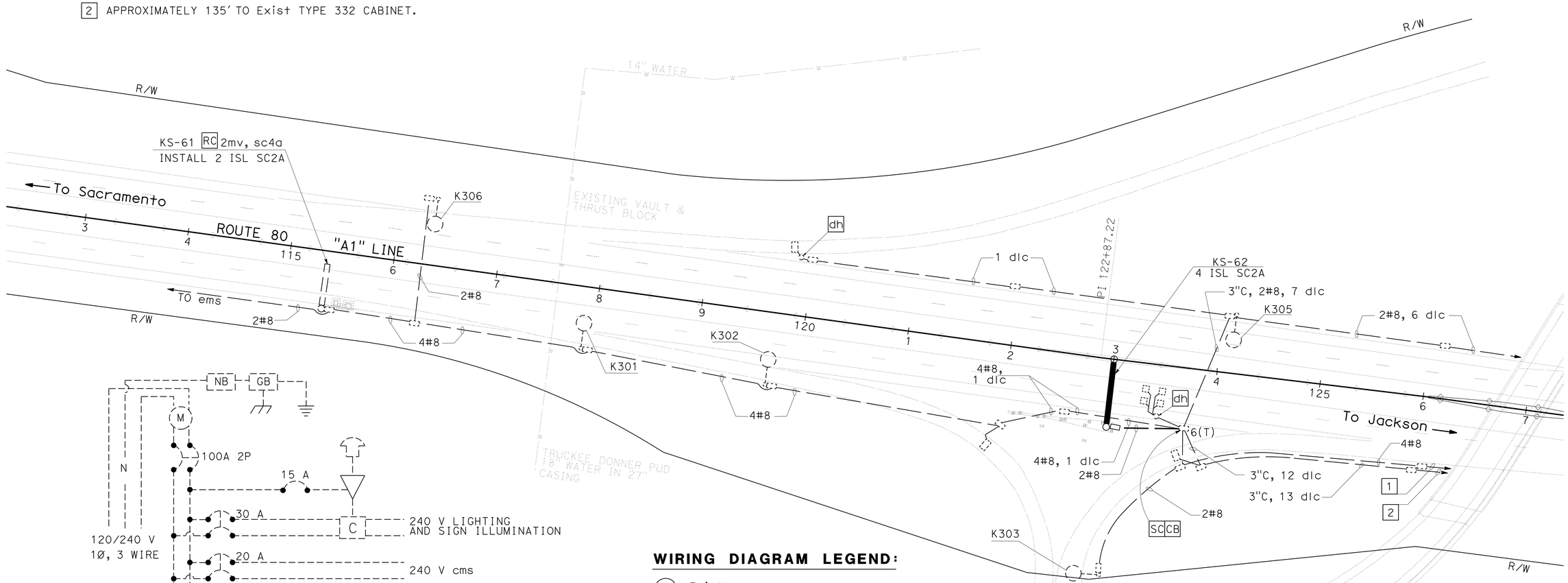

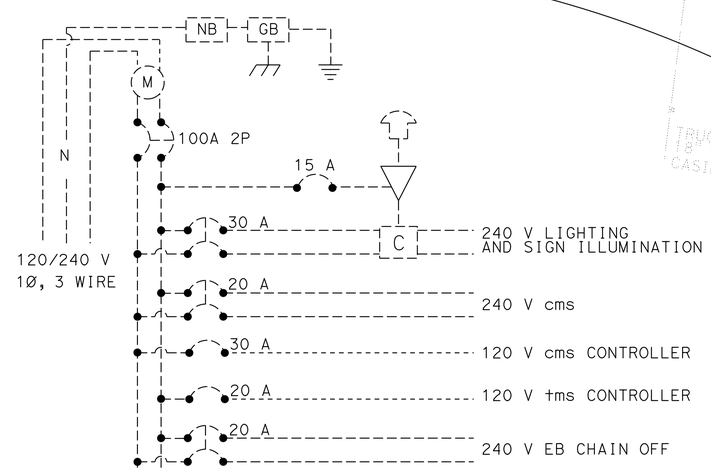

EXISTING 120/240 V SERVICE WIRING DIAGRAM

ctid No. 03170800013210.

WIRING DIAGRAM LEGEND:

- Exist peu
- Exist AUTO TEST SWITCH
- C Exist CONTACTOR
- M Exist METER SOCKET
- NB Exist NEUTRAL BUS
- GB Exist GROUND BUS

APPROVED FOR ELECTRICAL WORK ONLY

SIGN ILLUMINATION
MODIFY SIGN ILLUMINATION

SCALE: 1"=50′

E-1

STATE OF CALIFORNIA - DEPARTMENT OF TRANSPORTATION
Caltrans® ELECTRICAL DESIGN

FUNCTIONAL SUPERVISOR: NELSON LEE
CALCULATED-DESIGNED BY: JAMIE KOJAK
CHECKED BY: HABIB GOLBAN
REVISED BY
DATE REVISED

LAST REVISION 07-03-12
DATE PLOTTED => 12-DEC-2012
TIME PLOTTED => 18:19

Dist	COUNTY	ROUTE	POST MILES TOTAL PROJECT	SHEET No.	TOTAL SHEETS
03	Nev	80	R12.3/13.3	23	28

Randell D. Hiatt
REGISTERED CIVIL ENGINEER

October 19, 2012
PLANS APPROVAL DATE

REGISTERED PROFESSIONAL ENGINEER
Randell D. Hiatt
No. C50200
Exp. 6-30-13
CIVIL
STATE OF CALIFORNIA

THE STATE OF CALIFORNIA OR ITS OFFICERS OR AGENTS SHALL NOT BE RESPONSIBLE FOR THE ACCURACY OR COMPLETENESS OF SCANNED COPIES OF THIS PLAN SHEET.

TO ACCOMPANY PLANS DATED 10-15-12

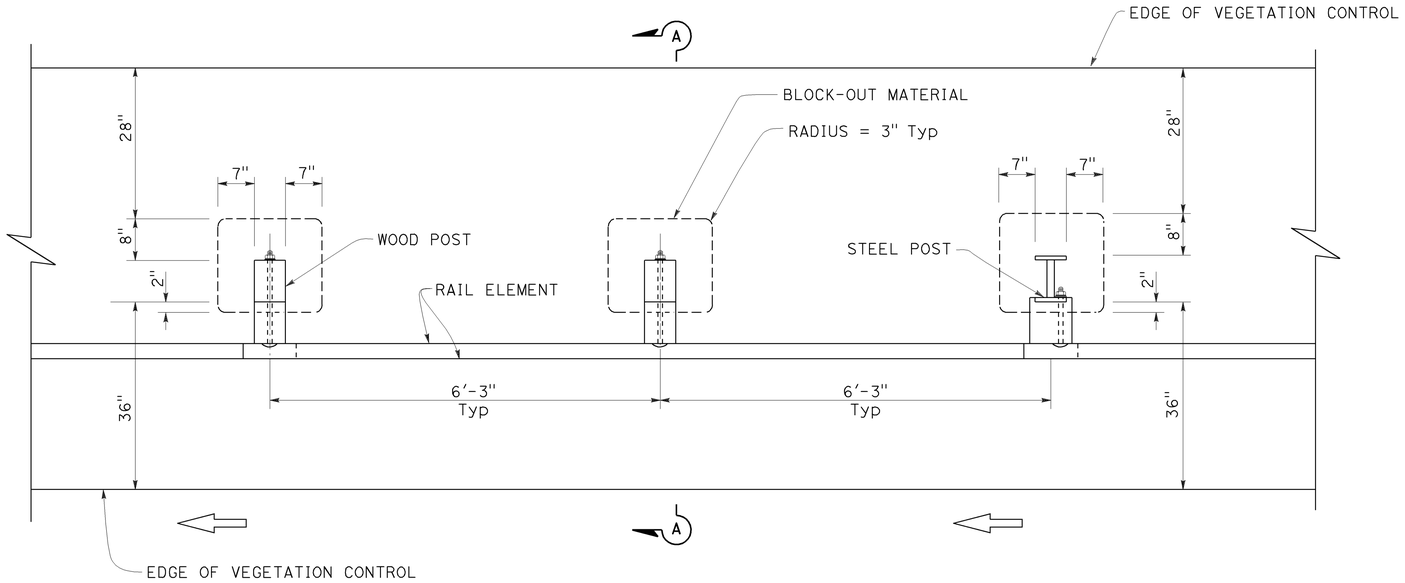

PLAN

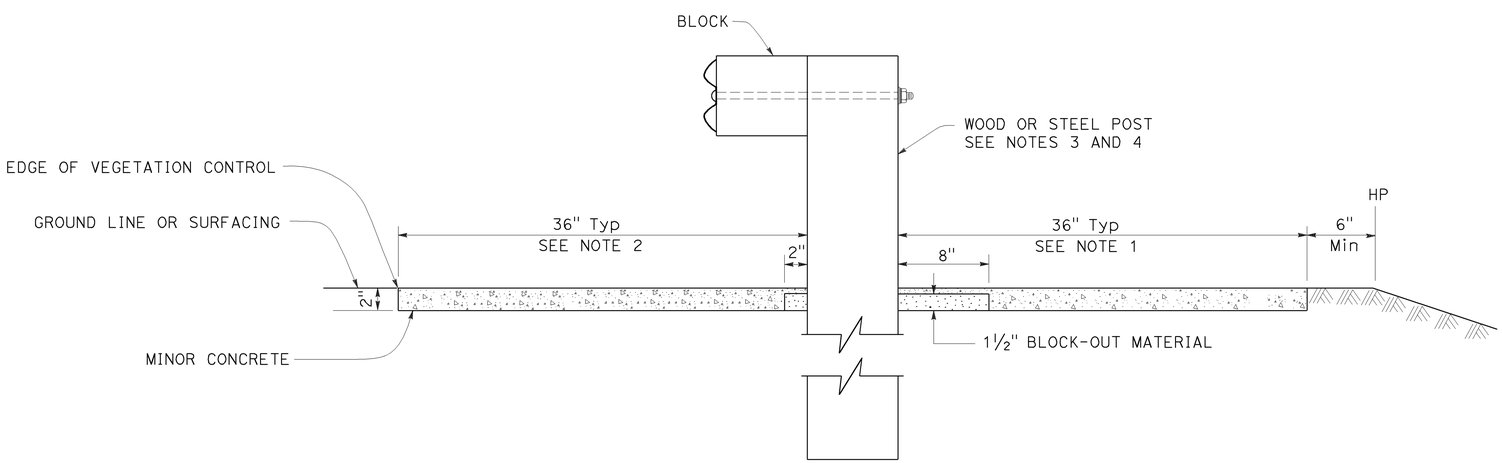

SECTION A-A

NOTES:

1. Where the distance between back of post and hinge point is less than 42", construct vegetation control to 6" from hinge point while maintaining the 8" block-out at back of post. If the 8" block-out at back of post can not be maintained, construct vegetation control flush with the back edge of post.
2. Where dike is constructed under railing, construct vegetation control to back edge of dike. Where paved shoulder is constructed within 36" in front of the post, construct vegetation control to the edge of paved shoulder.
3. For wood post sizes, see Standard Plan A77C1.
4. For steel post sizes, see Standard Plan A77C2.
5. For details not shown, see Standard Plans A77A1 and A77A2.

STATE OF CALIFORNIA
DEPARTMENT OF TRANSPORTATION

METAL BEAM GUARD RAILING TYPICAL VEGETATION CONTROL STANDARD RAILING SECTION

NO SCALE

RSP A77C5 DATED OCTOBER 19, 2012 SUPERSEDES STANDARD PLAN A77C5 DATED MAY 20, 2011 - PAGE 53 OF THE STANDARD PLANS BOOK DATED 2010.

REVISED STANDARD PLAN RSP A77C5

2010 REVISED STANDARD PLAN RSP A77C5

9-26-12

Dist	COUNTY	ROUTE	POST MILES TOTAL PROJECT	SHEET No.	TOTAL SHEETS
03	Nev	80	R12.3/13.3	24	28

Randell D. Hiatt
REGISTERED CIVIL ENGINEER

October 19, 2012
PLANS APPROVAL DATE

REGISTERED PROFESSIONAL ENGINEER
Randell D. Hiatt
No. C50200
Exp. 6-30-13
CIVIL
STATE OF CALIFORNIA

THE STATE OF CALIFORNIA OR ITS OFFICERS OR AGENTS SHALL NOT BE RESPONSIBLE FOR THE ACCURACY OR COMPLETENESS OF SCANNED COPIES OF THIS PLAN SHEET.

TO ACCOMPANY PLANS DATED 10-15-12

2010 REVISED STANDARD PLAN RSP A77C10

NOTES:

1. See Revised Standard Plan RSP A77C5 for additional vegetation control details.
2. Where dike is constructed under railing, construct vegetation control to back edge of dike. Where paved shoulder is constructed within 36" in front of the post, construct vegetation control to the edge of paved shoulder.

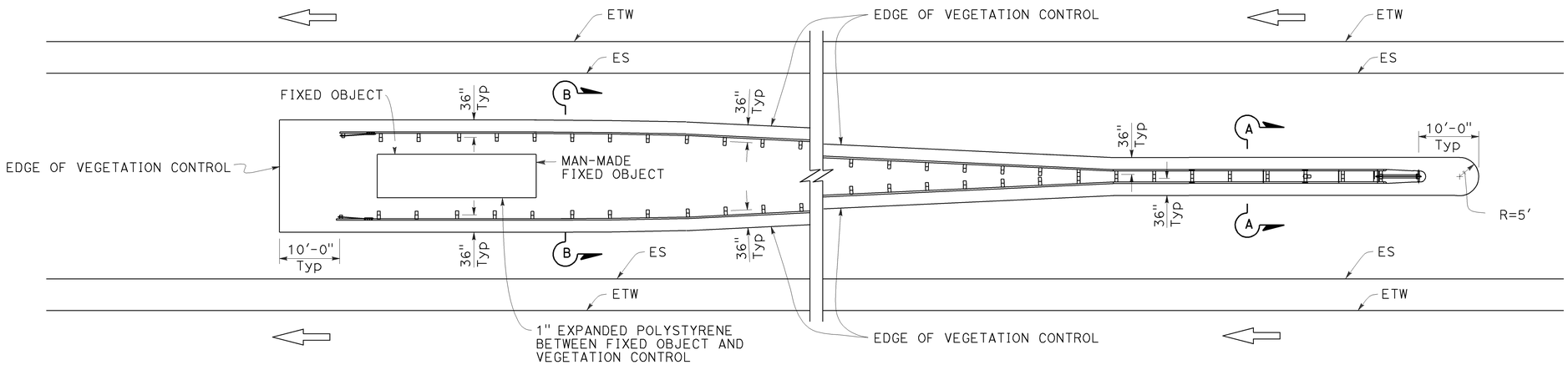

PLAN

Fixed object(s) between separate roadbeds
(One-Way Traffic)

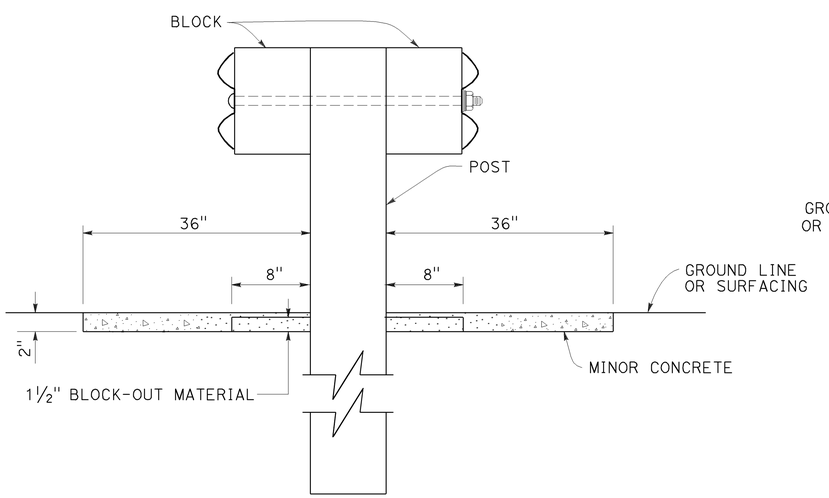

SECTION A-A

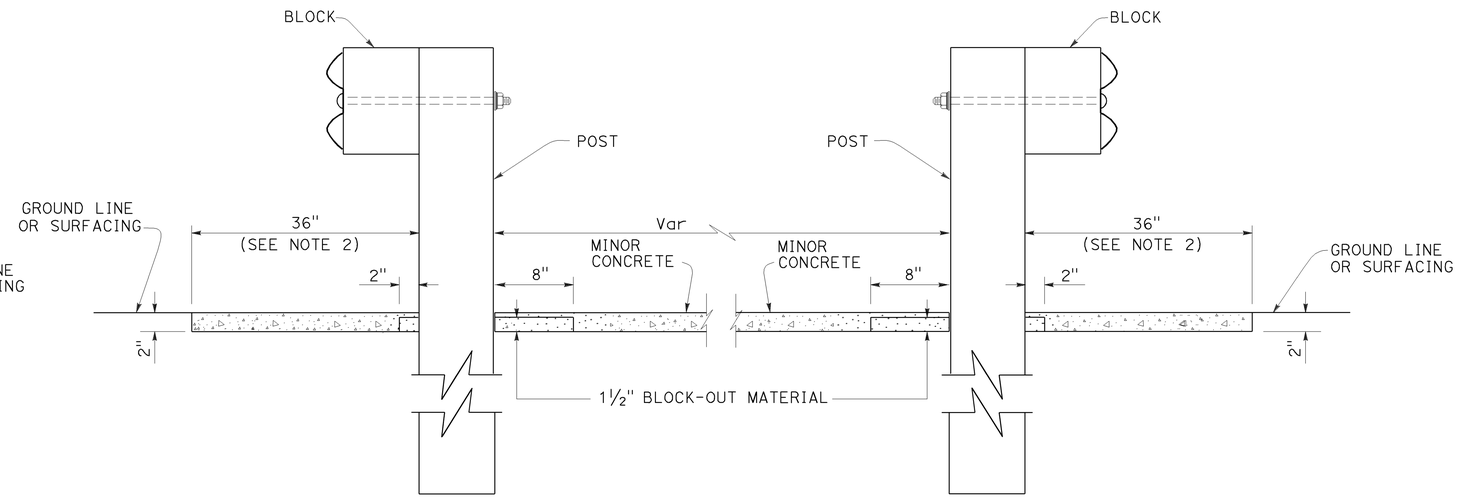

SECTION B-B

STATE OF CALIFORNIA
DEPARTMENT OF TRANSPORTATION

METAL BEAM GUARD RAILING TYPICAL VEGETATION CONTROL AT FIXED OBJECT

NO SCALE

RSP A77C10 DATED OCTOBER 19, 2012 SUPERSEDES STANDARD PLAN A77C10 DATED MAY 20, 2011 - PAGE 58 OF THE STANDARD PLANS BOOK DATED 2010.

REVISED STANDARD PLAN RSP A77C10

9-26-12

Dist	COUNTY	ROUTE	POST MILES TOTAL PROJECT	SHEET No.	TOTAL SHEETS
03	Nev	80	R12.3/13.3	25	28

Raymond Don Tsztoo
REGISTERED CIVIL ENGINEER

July 20, 2012
PLANS APPROVAL DATE

REGISTERED PROFESSIONAL ENGINEER Raymond Don Tsztoo No. C37332 Exp. 6-30-14 CIVIL STATE OF CALIFORNIA

THE STATE OF CALIFORNIA OR ITS OFFICERS OR AGENTS SHALL NOT BE RESPONSIBLE FOR THE ACCURACY OR COMPLETENESS OF SCANNED COPIES OF THIS PLAN SHEET.

TO ACCOMPANY PLANS DATED 10-15-12

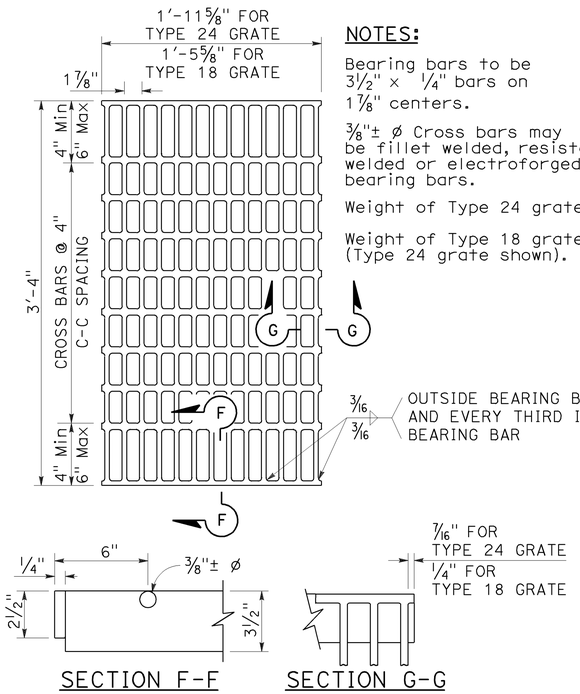

SECTION F-F SECTION G-G

TYPE 18-10 AND 24-13 GRATE

(Welded Steel)

NOTES:

Bearing bars to be 3½" × ¼" bars on 1⅞" centers.

⅜"± ø Cross bars may be fillet welded, resistance welded or electroforged to bearing bars.

Weight of Type 24 grate = 141 LBS.

Weight of Type 18 grate = 107 LBS. (Type 24 grate shown).

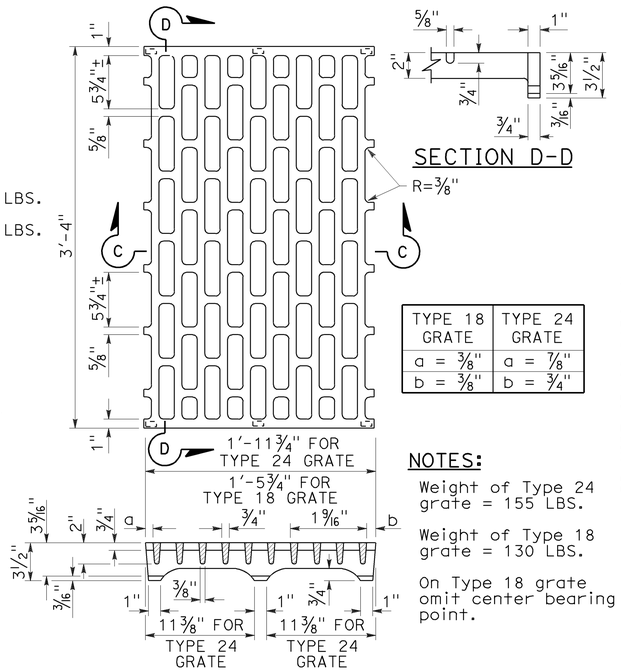

SECTION D-D

TYPE 18 GRATE	TYPE 24 GRATE
a = ⅜"	a = ⅞"
b = ⅜"	b = ¾"

NOTES:

Weight of Type 24 grate = 155 LBS.

Weight of Type 18 grate = 130 LBS.

On Type 18 grate omit center bearing point.

SECTION C-C

TYPE 18-8C AND 24-10C GRATE

(Cast ductile iron)

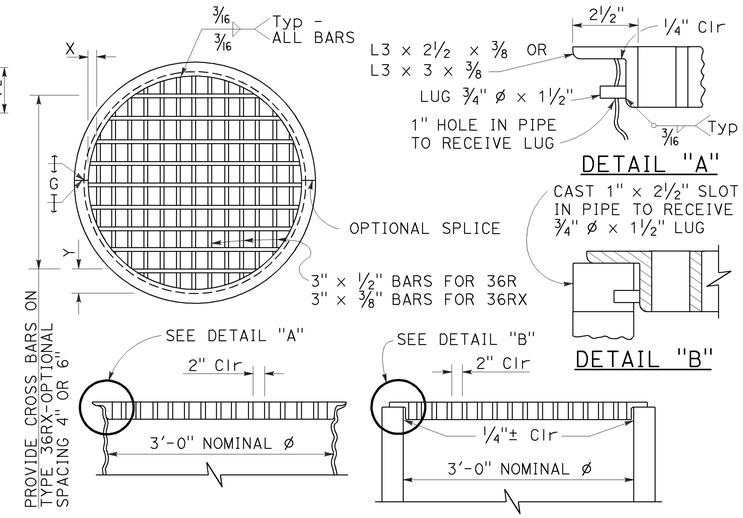

DETAIL "A"

DETAIL "B"

TYPE 36R AND 36RX GRATE DETAILS

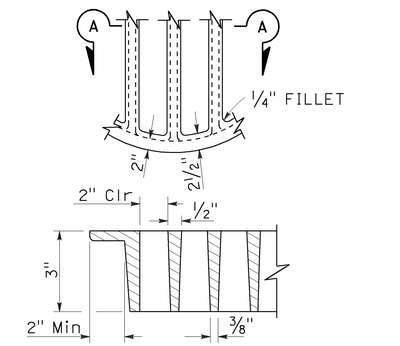

SECTION A-A

ALTERNATIVE CAST DUCTILE IRON GRATE OR CAST CARBON STEEL GRATE TYPE 36R AND 36RX

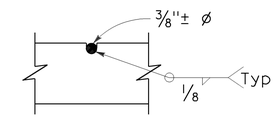

⅜"± ø Cross bars may be fillet welded, resistance welded or electroforged to bearing bars.

CROSS BAR DETAIL TYPE 36RX GRATE (WELDED STEEL)

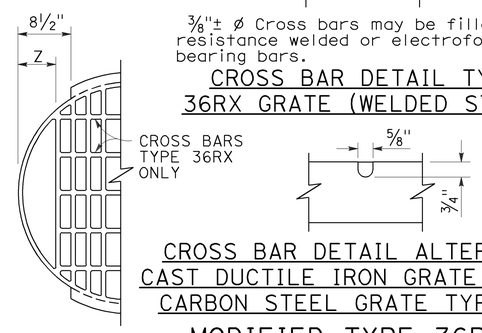

CROSS BAR DETAIL ALTERNATIVE CAST DUCTILE IRON GRATE OR CAST CARBON STEEL GRATE TYPE 36RX

MODIFIED TYPE 36R AND 36RX GRATE FOR ODI INLET

BASIS FOR Misc IRON AND STEEL FINAL PAY WEIGHTS FOR DRAINAGE INLETS

INLET TYPE	GRATE TYPE	No. OF GRATES	WEIGHT LB
GDO (SEE NOTE 4)	24-10C	2	391
	24-10S	2	456
	24-12X	2	473
	24-13	2	374
GO,GOL,G1,G2, G3,G4 (TYPE 24)	24-10C	1	202
	24-10S	1	229
	24-12X	1	239
	24-13	1	188
G4 (TYPE 18) G5,G6	18-8S	1	187
	18-9X	1	187
	18-10	1	149
GT1,GT2	18-8S	2	374
	18-9X	2	374
	18-10	2	298
GT3,GT4	24-10C	2	404
	24-10S	2	458
	24-12X	2	478
	24-13	2	376
ODI	36RX (Mod)	1	196
GMP,GCP,GCPI	36RX	1	215
ODI	36R (Mod)	1	220
GMP,GCP,GCPI	36R	1	236
TRASH RACK			22
GRATE CHAIN			3

NOTES:

1. When alternative grates are allowed - Final pay based on alternative with the lesser weight.
2. Use frame shown on Standard Plan D74A, D74B or RSP D77A as appropriate.
3. When Type 24-10S, 24-12X or 24-13 grates are used with GDO Inlets, a ¼" × 3½" × 3'-4⅞" steel bar shall be welded across the center of inlet frame to separate the individual grates.
4. See Revised Standard Plan RSP D77A for connecting chain to welded grate and frame. When chain is required, do not use cast ductile iron grate.

GRATE BAR SPACING TABLE

TYPE	No. OF BARS	CLEAR BAR SPACING	X	Y 4" SPACING	Y 6" SPACING	Z
36R	13	2"	2⅛"	-	-	-
36RX (STEEL)	15	2"	9/16"	3¾"	5¾"	-
36RX (CAST)	13	2"	2⅛"	3¾"	5¾"	-
36R Mod	12	2"	2⅛"	-	-	5"
36RX Mod (STEEL)	13	2"	9/16"	3¾"	5¾"	5 11/16"
36RX Mod (CAST)	12	2"	2⅛"	3¾"	5¾"	5"

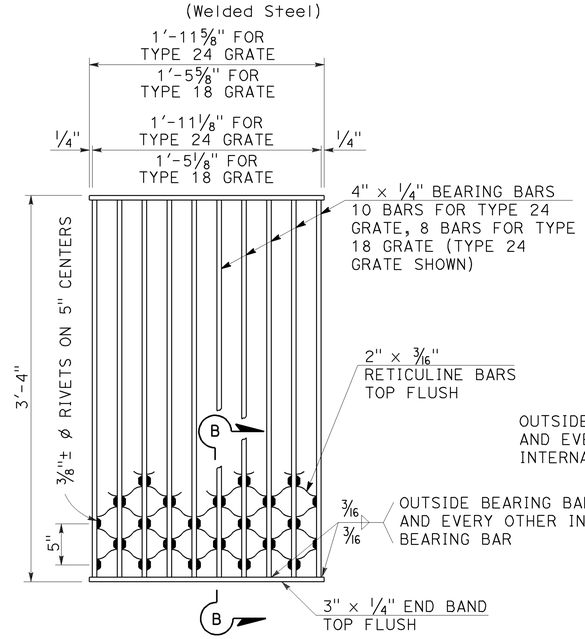

NOTES:

Weight of Type 24 grate = 182 LBS.
Weight of Type 18 grate = 145 LBS.

SECTION B-B

TYPE 18-8S AND 24-10S GRATE

(Welded Steel) Reticuline type

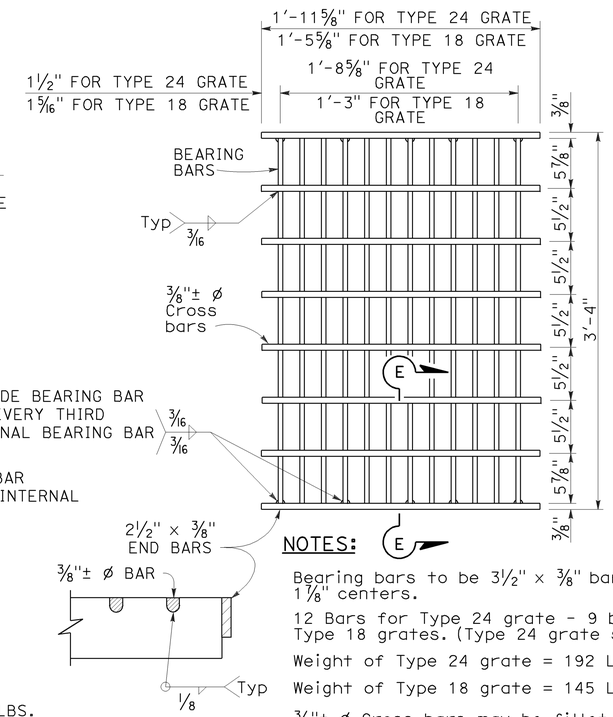

SECTION E-E

NOTES:

Bearing bars to be 3½" × ⅜" bars on 1⅞" centers.

12 Bars for Type 24 grate - 9 bars for Type 18 grates. (Type 24 grate shown).

Weight of Type 24 grate = 192 LBS.

Weight of Type 18 grate = 145 LBS.

⅜"± ø Cross bars may be fillet welded, resistance welded or electroforged to bearing bars.

TYPE 18-9X AND 24-12X GRATE

(Welded Steel)

STATE OF CALIFORNIA
DEPARTMENT OF TRANSPORTATION

BICYCLE TRAVERSABLE GRATE DETAILS

NO SCALE

RSP D77B DATED JULY 20, 2012 SUPERSEDES STANDARD PLAN D77B DATED MAY 20, 2011 - PAGE 165 OF THE STANDARD PLANS BOOK DATED 2010.

REVISED STANDARD PLAN RSP D77B

2010 REVISED STANDARD PLAN RSP D77B

4-17-12

DIST	COUNTY	ROUTE	POST MILES TOTAL PROJECT	SHEET NO.	TOTAL SHEETS
03	Nev	80	R12.3/13.3	26	28

REGISTERED ELECTRICAL ENGINEER

January 20, 2012
PLANS APPROVAL DATE

REGISTERED PROFESSIONAL ENGINEER Jeffery G. McRae No. E14512 Exp. 6-30-12 ELECTRICAL STATE OF CALIFORNIA

THE STATE OF CALIFORNIA OR ITS OFFICERS OR AGENTS SHALL NOT BE RESPONSIBLE FOR THE ACCURACY OR COMPLETENESS OF SCANNED COPIES OF THIS PLAN SHEET.

TO ACCOMPANY PLANS DATED 10-15-12

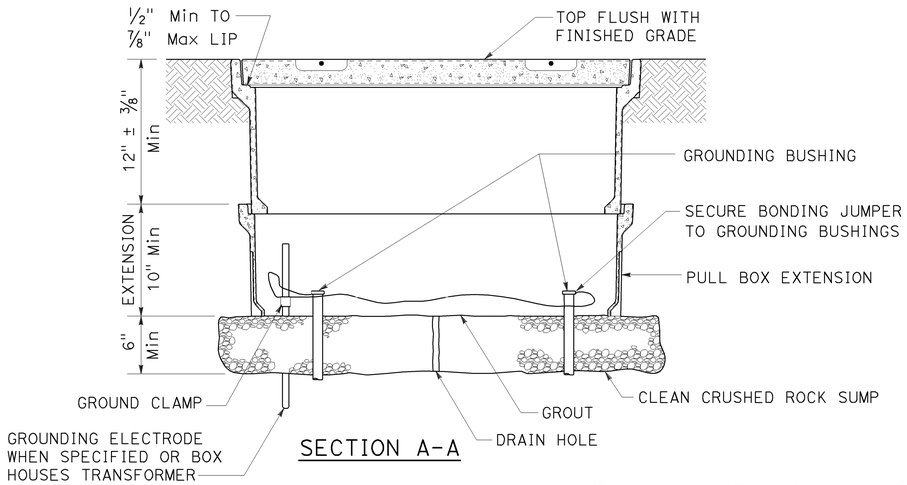

SECTION A-A

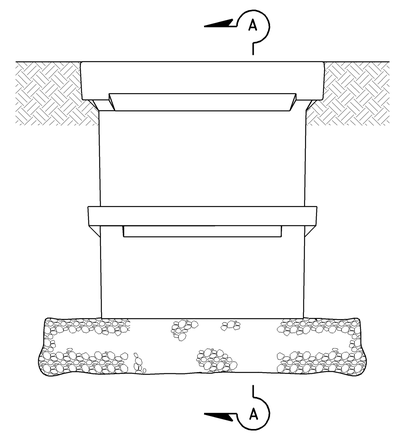

SIDE VIEW

INSTALLATION DETAILS

DETAIL A

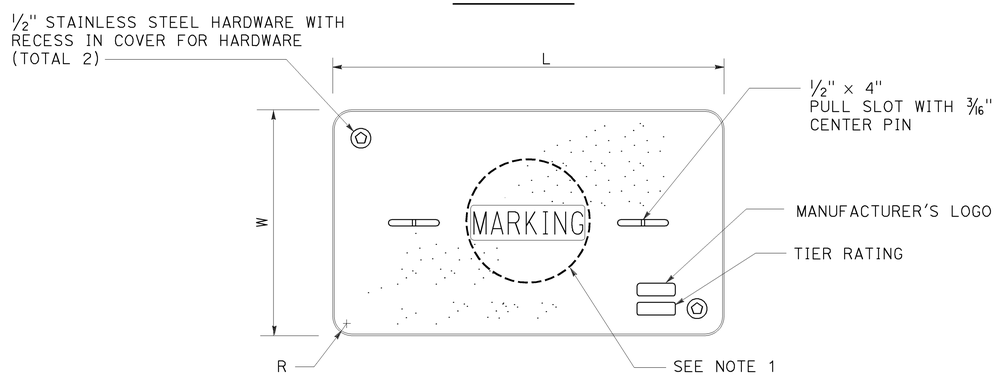

COVER TOP VIEW

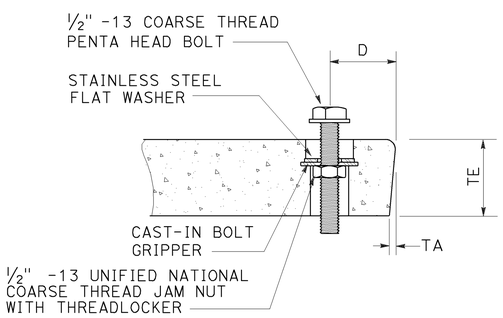

TYPICAL COVER CAPTIVE BOLT

OR SIMILAR

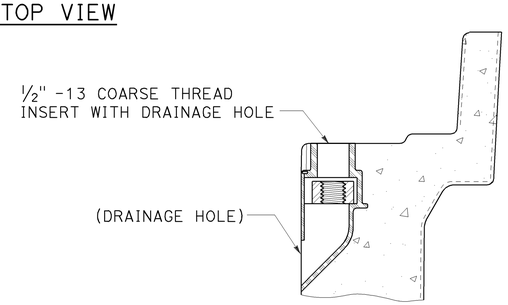

TYPICAL THREADED INSERT

OR SIMILAR

DIMENSION TABLE										
PULL BOX	PULL BOX			COVER						
	MINIMUM DEPTH BOX	MINIMUM DEPTH EXTENSION	MAXIMUM WEIGHT	L	W	R	TE	TA	D	MAXIMUM WEIGHT
No. 3 1/2	12"	N/A	40 lb	1' - 3 3/8"	10 1/8"	1 3/8"	2"	1/8"	1 3/4"	30 lb
No. 5	12"	10"	55 lb	1' - 11 1/4"	1' - 1 3/4"	1 3/8"	2"	1/8"	1 3/4"	60 lb
No. 6	12"	10"	70 lb	2' - 6 1/2"	1' - 5 1/2"	1 3/8"	2"	1/8"	2"	85 lb

NOTES ON PULL BOXES:

1. Pull box covers must be marked as follows: "SERVICE" Service circuits between service point and service disconnect; "SPRINKLER-CONTROL" sprinkler control circuits, 50 V or less; "CALTRANS" on all pull boxes, except pull boxes marked "SPRINKLER-CONTROL"; and "TELEPHONE" Telephone service;

   A) No. 3 1/2 pull box.
      1) "SIGNAL" - Traffic signal circuits with or without street or sign lighting circuits.
      2) "ST LIGHTING" - Street or sign lighting circuits where voltage is under 600 V.

   B) No. 5, 6, 9 or 9A pull box.
      1) "TRAFFIC SIGNAL" - Traffic signal circuits with or without street or sign lighting circuits.
      2) "STREET LIGHTING" - Street or sign lighting circuits where voltage is under 600 V.
      3) "STREET LIGHTING-HIGH VOLTAGE" - Street or sign lighting circuits where voltage is above 600 V.
      4) "IRRIGATION" - Circuits to irrigation controller 120 V or more.
      5) "RAMP METER" - Ramp meter circuits.
      6) "COUNT STATION" - Count or speed monitor circuits.
      7) "COMMUNICATIONS" - Communication circuits.
      8) "TOS COMMUNICATIONS" - TOS communication line.
      9) "TOS POWER" - TOS power.
      10) "TDC POWER" - Telephone demarcation cabinet power.
      11) "CCTV" - Closed circuit television circuits.
      12) "TMS" - Traffic monitoring station circuits.
      13) "CMS" - Changeable message sign circuits.
      14) "HAR" - Highway advisory radio circuits.

2. The nominal dimensions of the opening in which the cover sets must be the same as the cover dimensions (L and W) plus 1/8" or greater.
3. Covers and boxes must be interchangeable with California Standard. When interchanged with a standard, the top surfaces must be flush within 1/8". Top outside radius of covers and pull boxes must have a 1/8" radius.
4. Pull box extension may be another pull box as long as the bottom edge of the pull box can fit into the cover opening.

STATE OF CALIFORNIA
DEPARTMENT OF TRANSPORTATION

ELECTRICAL SYSTEMS (PULL BOX)

NO SCALE

RSP ES-8A DATED JANUARY 20, 2012 SUPPLEMENTS THE STANDARD PLANS BOOK DATED 2010.

REVISED STANDARD PLAN RSP ES-8A

2010 REVISED STANDARD PLAN RSP ES-8A

01-09-12

DIST	COUNTY	ROUTE	POST MILES TOTAL PROJECT	SHEET NO.	TOTAL SHEETS
03	Nev	80	R12.3/13.3	27	28

REGISTERED ELECTRICAL ENGINEER

January 20, 2012
PLANS APPROVAL DATE

REGISTERED PROFESSIONAL ENGINEER Jeffery G. McRae No. E14512 Exp. 6-30-12 ELECTRICAL STATE OF CALIFORNIA

THE STATE OF CALIFORNIA OR ITS OFFICERS OR AGENTS SHALL NOT BE RESPONSIBLE FOR THE ACCURACY OR COMPLETENESS OF SCANNED COPIES OF THIS PLAN SHEET.

TO ACCOMPANY PLANS DATED 10-15-12

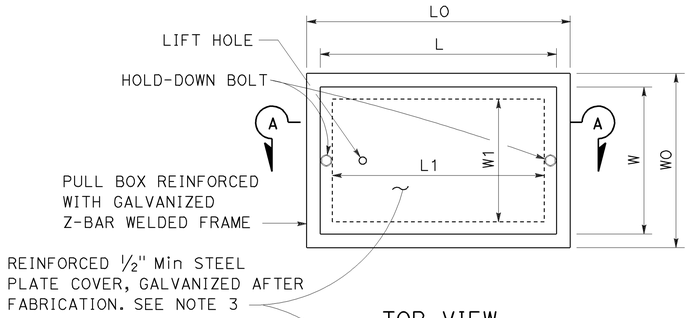

TOP VIEW

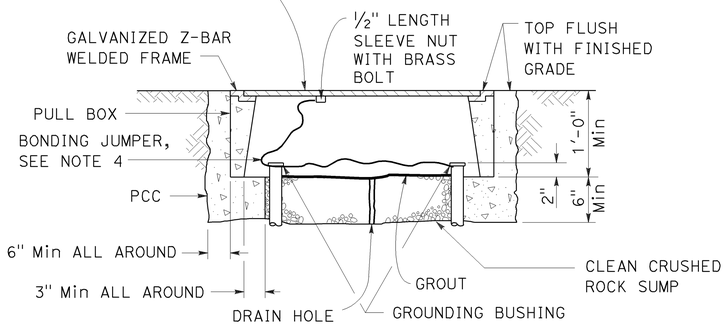

SECTION A-A

No. 3½(T), No. 5(T) AND No. 6(T) TRAFFIC PULL BOX

NOTES ON PULL BOXES:

1. Traffic pull box shall be provided with steel cover and special concrete footing. Steel cover shall have embossed non-skid pattern.
2. Steel reinforcing shall be as regularly used in the standard products of the respective manufacturer.
3. Pull box covers must be marked as follows: "SERVICE" Service circuits between service point and service disconnect; "SPRINKLER-CONTROL" Sprinkler control circuits, 50 V or less; "CALTRANS" On all pull boxes, except pull boxes marked "SPRINKLER-CONTROL"; and "TELEPHONE" Telephone service.
   A) No. 3½(T) pull box.
      1) "SIGNAL" - Traffic signal circuits with or without street or sign lighting circuits.
      2) "ST LIGHTING" - Street or sign lighting circuits where voltage is under 600 V.
   B) No. 5(T) or 6(T) pull box.
      1) "TRAFFIC SIGNAL" - Traffic signal circuits with or without street or sign lighting circuits.
      2) "STREET LIGHTING" - Street or sign lighting circuits where voltage is under 600 V.
      3) "STREET LIGHTING-HIGH VOLTAGE" - Street or sign lighting circuits where voltage is above 600 V.
      4) "IRRIGATION" - Circuits to irrigation controller 120 V or more.
      5) "RAMP METER" - Ramp meter circuits.
      6) "COUNT STATION" - Count or speed monitor circuits.
      7) "COMMUNICATION" - Communication circuits.
      8) "TOS COMMUNICATIONS" - TOS communications line.
      9) "TOS POWER" - TOS power.
      10) "TDC POWER" - Telephone demarcation cabinet power.
      11) "CCTV" - Closed circuit television circuits.
      12) "TMS" - Traffic monitoring station circuits.
      13) "CMS" - Changeable message sign circuits.
      14) "HAR" - Highway advisory radio circuits.
4. Bonding jumper for metal covers shall be 3' long, minimum.
5. The nominal dimensions of the opening in which the cover sets must be the same as the cover dimensions except the length and width dimensions shall be ⅛" greater.
6. Covers and boxes must be interchangeable with California standard male and female gages. When interchanged with a standard male or female gage, the top surfaces must be flush within ⅛".

DIMENSION TABLE

PULL BOX	BOX						COVER				
	MINIMUM * THICKNESS	MINIMUM DEPTH BOX AND EXTENSION	WO	LO	L1	W1	L **	W **	R	EDGE THICKNESS	EDGE TAPER
No. 3½(T)	1½"	1'-0"	1'-5"± 1"	1'-8⅞"±	1'-2½"±	10⅝"± 1"	1'-8"±	1'-1¾"±	0"	½"	NONE
No. 5(T)	1¾"	1'-0"	1'-11½"± 1"	2'-5½"±	1'-7"±	1'-1"± 1"	2'-3"±	1'-4"±	0"	½"	NONE
No. 6(T)	2"	1'-0"	2'-6"± 1"	2'-11½"±	1'-11½"±	1'-5"± 1"	2'-9"±	1'-8"±	0"	½"	NONE

* EXCLUDING CONDUIT WEB ** TOP DIMENSION

STATE OF CALIFORNIA
DEPARTMENT OF TRANSPORTATION

ELECTRICAL SYSTEMS (TRAFFIC RATED PULL BOX)

NO SCALE

RSP ES-8B DATED JANUARY 20, 2012 SUPPLEMENTS THE STANDARD PLANS BOOK DATED 2010.

REVISED STANDARD PLAN RSP ES-8B

2010 REVISED STANDARD PLAN RSP ES-8B

Dist	COUNTY	ROUTE	POST MILES TOTAL PROJECT	SHEET No.	TOTAL SHEETS
03	Nev	80	R12.3/13.3	28	28

REGISTERED ELECTRICAL ENGINEER

July 20, 2012
PLANS APPROVAL DATE

REGISTERED PROFESSIONAL ENGINEER
Jeffery G. McRae
No. E14512
Exp. 6-30-14
ELECTRICAL
STATE OF CALIFORNIA

THE STATE OF CALIFORNIA OR ITS OFFICERS OR AGENTS SHALL NOT BE RESPONSIBLE FOR THE ACCURACY OR COMPLETENESS OF SCANNED COPIES OF THIS PLAN SHEET.

TO ACCOMPANY PLANS DATED 10-15-12

ISOFOOTCANDLE CURVE - MINIMUM

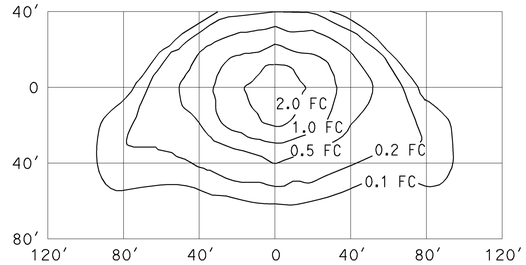

TYPE III MEDIUM CUTOFF

Cutoff Luminaire
34′ Mounting Height
Lamp operated at 22,000 lm
200-W high pressure sodium lamp
ANSI Designation S66

ISOFOOTCANDLE CURVE - MINIMUM

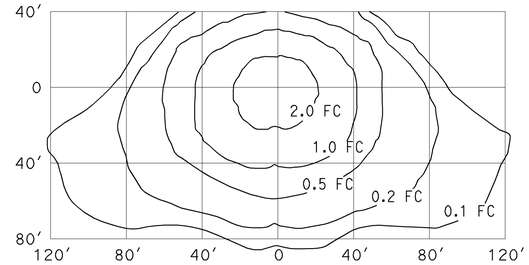

TYPE III MEDIUM CUTOFF

Cutoff Luminaire
40′ Mounting Height
Lamp operated at 37,000 lm
310-W high pressure sodium lamp
ANSI Designation S67

ISOFOOTCANDLE CURVE - MINIMUM

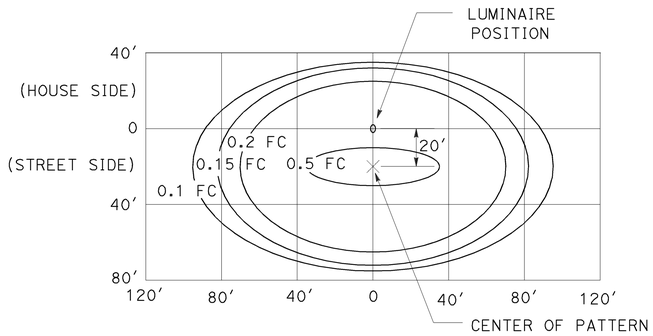

LED LUMINAIRE ROADWAY 1

200-W HPS Equivalent at 34′ Mounting Height

ISOFOOTCANDLE CURVE - MINIMUM

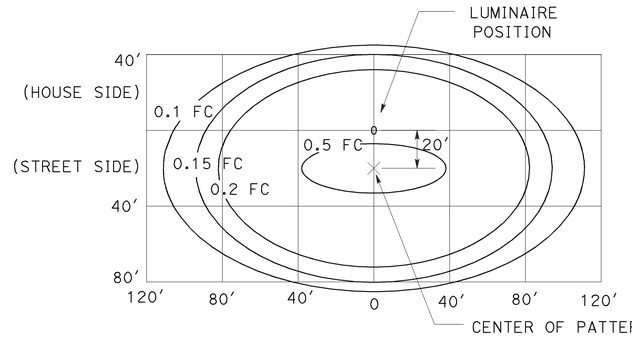

LED LUMINAIRE ROADWAY 2

310-W HPS Equivalent at 40′ Mounting Height

ISOFOOTCANDLE CURVE - MINIMUM

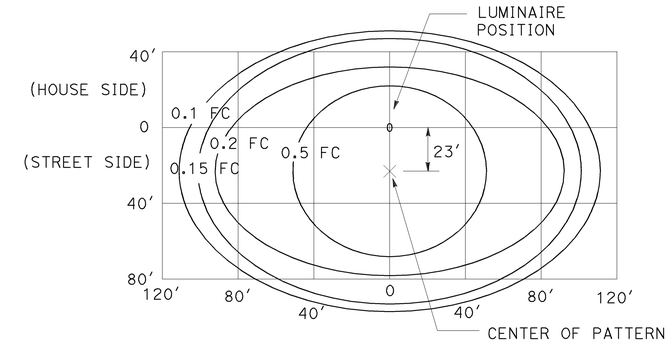

LED LUMINAIRE ROADWAY 4

400-W HPS Equivalent at 40′ Mounting Height

ISOFOOTCANDLE CURVE - MINIMUM

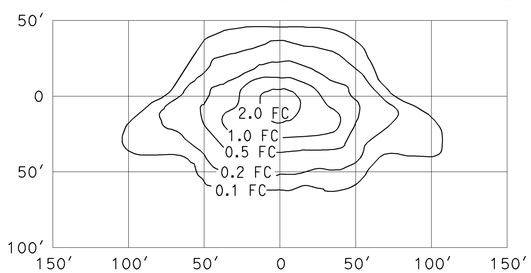

TYPE III MEDIUM CUTOFF

Cutoff Luminaire
30′ Mounting Height
Lamp operated at 16,000 lm
150-W high pressure sodium lamp
ANSI Designation S55

ISOFOOTCANDLE CURVE - MINIMUM

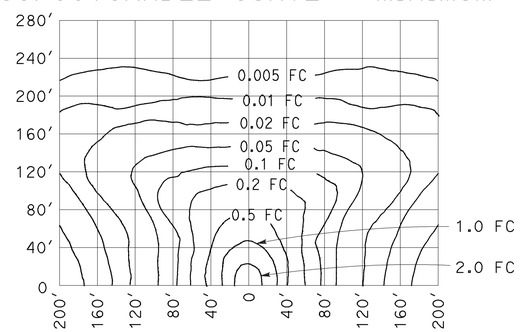

LOW PRESSURE SODIUM LUMINAIRE

40′ Mounting Height
Lamp operated at 33,000 lm
180-W low pressure sodium lamp

STATE OF CALIFORNIA
DEPARTMENT OF TRANSPORTATION

ELECTRICAL SYSTEMS (ISOFOOTCANDLE DIAGRAMS)

NO SCALE

RSP ES-10A DATED JULY 20, 2012 SUPPLEMENTS THE STANDARD PLANS BOOK DATED 2010.

REVISED STANDARD PLAN RSP ES-10A

2010 REVISED STANDARD PLAN RSP ES-10A

2-16-12