Dist	COUNTY	ROUTE	POST MILES TOTAL PROJECT	SHEET No.	TOTAL SHEETS
03	Pla	89	T8.6/10.9	1	34

INDEX OF PLANS

SHEET No.	DESCRIPTION
1	TITLE AND LOCATION MAP
2	TYPICAL CROSS SECTIONS
3-26	DRAINAGE PLANS, PROFILES, DETAILS AND QUANTITIES
27	CONSTRUCTION AREA SIGNS
28	SUMMARY OF QUANTITES
29-30	EROSION CONTROL LEGEND AND DETAIL
31	TRAFFIC CONTROL SYSTEM
32-34	REVISED STANDARD PLANS

THE STANDARD PLANS LIST APPLICABLE TO THIS CONTRACT IS INCLUDED IN THE NOTICE TO BIDDERS AND SPECIAL PROVISIONS BOOK.

STATE OF CALIFORNIA

DEPARTMENT OF TRANSPORTATION

PROJECT PLANS FOR CONSTRUCTION ON

STATE HIGHWAY

IN PLACER COUNTY
AT AND NEAR TAHOE CITY
FROM JUNCTION ROUTE 89/28 TO
1.4 MILES SOUTH OF ALPINE MEADOWS ROAD

TO BE SUPPLEMENTED BY STANDARD PLANS DATED 2010

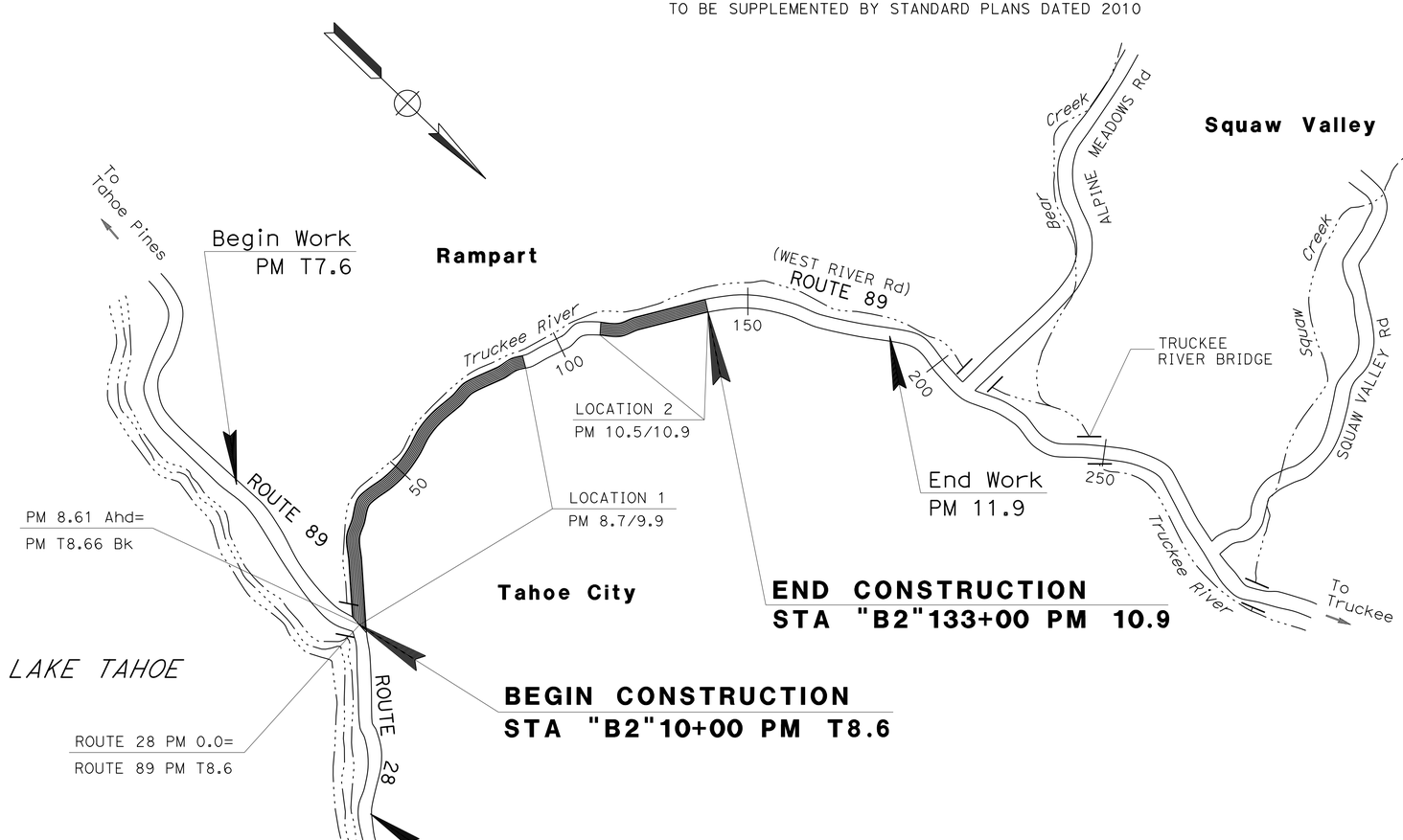

LOCATION MAP

NO SCALE

THE CONTRACTOR SHALL POSSESS THE CLASS (OR CLASSES) OF LICENSE AS SPECIFIED IN THE "NOTICE TO BIDDERS."

PROJECT MANAGER: MIKE BARTLETT

DESIGN ENGINEER: CHRIS ROCKEY

1-2-13
PROJECT ENGINEER REGISTERED CIVIL ENGINEER — DATE

January 22, 2013
PLANS APPROVAL DATE

REGISTERED PROFESSIONAL ENGINEER — CHRIS ROCKEY — No. 78030 — Exp. 09-30-13 — CIVIL — STATE OF CALIFORNIA

THE STATE OF CALIFORNIA OR ITS OFFICERS OR AGENTS SHALL NOT BE RESPONSIBLE FOR THE ACCURACY OR COMPLETENESS OF SCANNED COPIES OF THIS PLAN SHEET.

CONTRACT No.	03-3F4204
PROJECT ID	0312000290

LAST REVISION 00-00-00 — DATE PLOTTED => 24-JAN-2013 — TIME PLOTTED => 16:56

Dist	COUNTY	ROUTE	POST MILES TOTAL PROJECT	SHEET No.	TOTAL SHEETS
03	Pla	89	T8.6/10.9	2	34

REGISTERED CIVIL ENGINEER 1-2-13 DATE

1-22-13
PLANS APPROVAL DATE

REGISTERED PROFESSIONAL ENGINEER CHRIS ROCKEY No. C78030 Exp. 9/30/13 CIVIL STATE OF CALIFORNIA

THE STATE OF CALIFORNIA OR ITS OFFICERS OR AGENTS SHALL NOT BE RESPONSIBLE FOR THE ACCURACY OR COMPLETENESS OF SCANNED COPIES OF THIS PLAN SHEET.

NOTES:

1. FOR ACCURATE RIGHT OF WAY DATA, CONTACT RIGHT OF WAY ENGINEERING AT THE DISTRICT OFFICE.
2. DIMENSIONS OF THE PAVEMENT STRUCTURES (STRUCTURAL SECTIONS) ARE SUBJECT TO THE TOLERANCES SPECIFIED IN THE STANDARD PLANS.
3. COLD PLANING SHALL NOT EXCEED A MAXIMUM DEPTH OF 0.25 FEET.

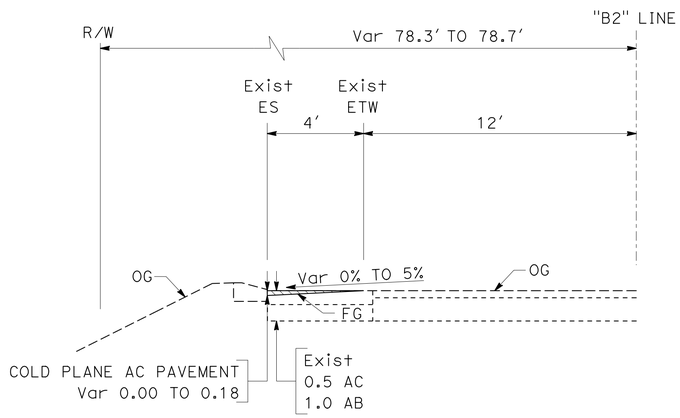

ROUTE 89
STA "B2" 63+15.0 TO STA "B2" 63+71.9

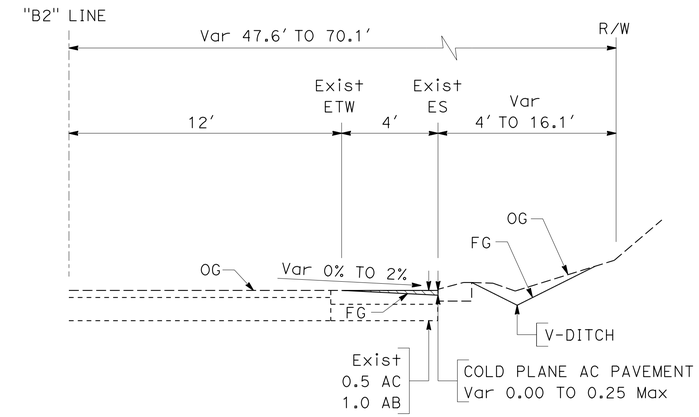

ROUTE 89
STA "B2" 81+23.0 TO STA "B2" 84+00.0

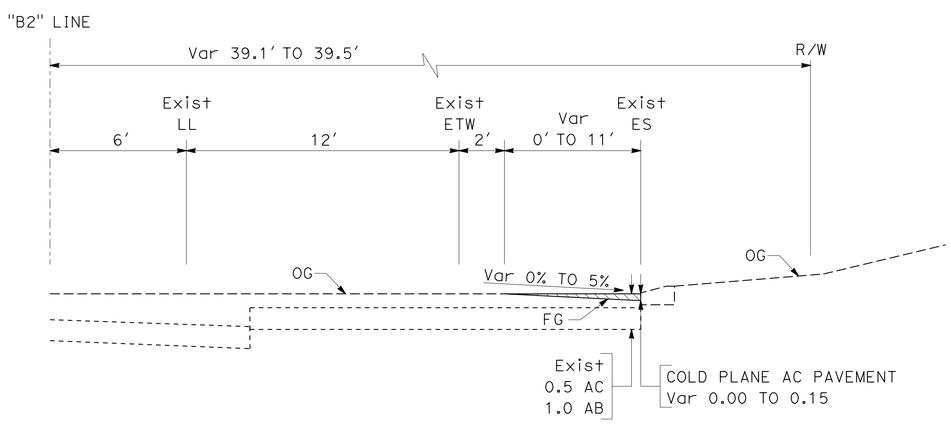

ROUTE 89
STA "B2" 33+45.2 TO STA "B2" 34+82.6

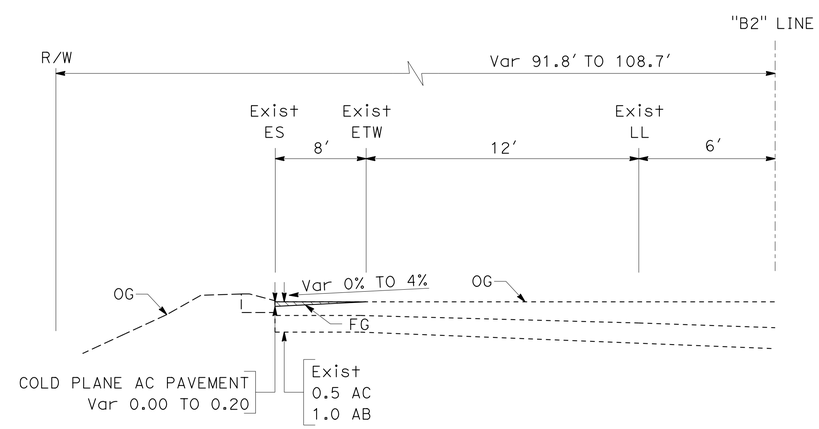

ROUTE 89
STA "B2" 40+89.0 TO STA "B2" 43+00.0

TYPICAL CROSS SECTIONS

NO SCALE

X-1

STATE OF CALIFORNIA - DEPARTMENT OF TRANSPORTATION
Caltrans®
DIVISION OF ENGINEERING

FUNCTIONAL SUPERVISOR: DENNIS JAGODA
CALCULATED-DESIGNED BY: CHRIS ROCKEY
CHECKED BY: MIKE DEWALL
REVISED BY
DATE REVISED

LAST REVISION 00-00-00
DATE PLOTTED => 24-JAN-2013
TIME PLOTTED => 16:56

Dist	COUNTY	ROUTE	POST MILES TOTAL PROJECT	SHEET No.	TOTAL SHEETS
03	Pla	89	T8.6/10.9	3	34

REGISTERED CIVIL ENGINEER 1-2-13 DATE

1-22-13
PLANS APPROVAL DATE

REGISTERED PROFESSIONAL ENGINEER CHRIS ROCKEY No. C78030 Exp. 9/30/13 CIVIL STATE OF CALIFORNIA

THE STATE OF CALIFORNIA OR ITS OFFICERS OR AGENTS SHALL NOT BE RESPONSIBLE FOR THE ACCURACY OR COMPLETENESS OF SCANNED COPIES OF THIS PLAN SHEET.

NOTES:

1. FOR ACCURATE RIGHT OF WAY DATA, CONTACT RIGHT OF WAY ENGINEERING AT THE DISTRICT OFFICE.
2. LOCATION OF EXISTING UTILITY FACILITIES SHOWN ON THESE PLANS ARE APPROXIMATE AND SHALL BE VERIFIED BY THE CONTRACTOR PRIOR TO CONSTRUCTION.
3. NOT ALL SERVICE LINES OR FACILITIES OUTSIDE OF THE STATE RIGHT OF WAY ARE SHOWN.
4. CALIFORNIA COORDINATE SYSTEM, ZONE 2, HORIZONTAL DATUM: NAD 83, VERTICAL DATUM: NGVD 29.
5. PH #9, UNABLE TO LOCATE POSSIBLE ½" PLASTIC GAS LINE IN 1½" STEEL CONDUIT. THE UTILITY COMPANY IS UNCERTAIN OF THE LOCATION, POTHOLED 5′ LONG BY 42" DEEP AREA.
6. FOR PP USE HIGH DENSITY POLYETHYLENE PIPE WITH A SMOOTH INTERIOR.
7. FINISH DITCH EXCAVATION WITHIN 5 FEET OF THE STREAMBANK WITH HAND TOOLS ONLY.
8. SAWCUT THE ENTIRE PAVED PERIMETER OF THE TRENCH PRIOR TO EXCAVATION.

LEGEND:

- GRADE TO DRAIN
- COLD PLANE AC PAVEMENT
- ROCK STAIN
- UTILITY POTHOLE
- GRADE TO DRAIN

ABBREVIATIONS:

PMP = PERFORATED METAL PIPE
PH = UTILITY POTHOLE
HDPES = HIGH DENSITY POLYETHYLENE PIPE WITH A SMOOTH INTERIOR
CVG = CONCRETE VALLEY GUTTER (SEE DRAINAGE DETAILS)
CC = CONCRETE CURB (SEE DRAINAGE DETAILS)

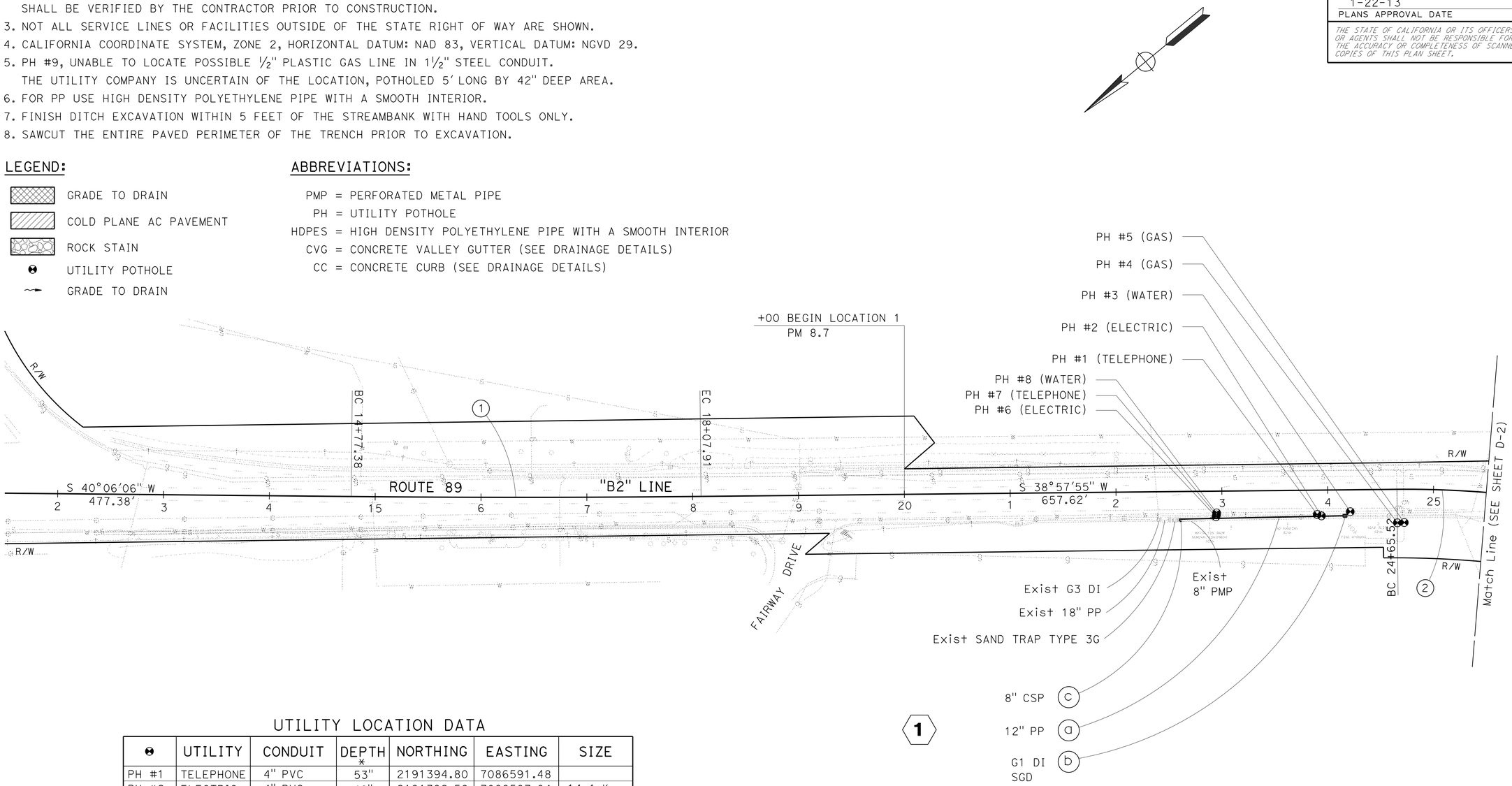

UTILITY LOCATION DATA

⊕	UTILITY	CONDUIT	DEPTH *	NORTHING	EASTING	SIZE
PH #1	TELEPHONE	4" PVC	53"	2191394.80	7086591.48	
PH #2	ELECTRIC	4" PVC	48"	2191392.56	7086587.84	14.4 Kv
PH #2	ELECTRIC	4" PVC	52"	2191392.56	7086587.84	14.4 Kv
PH #3	WATER	10" ACP	48"	2191369.04	7086573.61	
PH #4	GAS	2" STEEL	48"	2191341.41	7086537.12	225 psi
PH #5	GAS	4" PLASTIC	48"	2191336.22	7086533.20	225 psi
PH #6	ELECTRIC	4" PVC	59"	2191469.87	7086650.71	14.4 Kv
PH #6	ELECTRIC	4" PVC	64"	2191469.87	7086650.71	14.4 Kv
PH #7	TELEPHONE	4" PVC	62"	2191468.45	7086651.70	
PH #8	WATER	10" ACP	48"	2191467.16	7086653.13	
PH #9	GAS	SEE NOTE 5	42"**	2190978.70	7085226.45	43 psi

* DEPTH IS FROM ORIGINAL GROUND TO THE TOP OF UTILITY CONDUIT.
** DEPTH OF POTHOLE ONLY, UTILITY NOT LOCATED (SEE NOTE 5).

CURVE DATA

No. ⊕	R	Δ	T	L
1	16665′	1°8′11"	165.27′	330.52′
2	935′	48°56′48"	425.60′	798.78′

DRAINAGE PLAN

SCALE: 1" = 50′

D-1

STATE OF CALIFORNIA - DEPARTMENT OF TRANSPORTATION
Caltrans
DIVISION OF ENGINEERING

FUNCTIONAL SUPERVISOR: DENNIS JAGODA
CALCULATED-DESIGNED BY: CHRIS ROCKEY
CHECKED BY: MIKE DEWALL
REVISED BY
DATE REVISED

LAST REVISION 00-00-00
DATE PLOTTED => 24-JAN-2013
TIME PLOTTED => 16:56

Dist	COUNTY	ROUTE	POST MILES TOTAL PROJECT	SHEET No.	TOTAL SHEETS
03	Pla	89	T8.6/10.9	4	34

REGISTERED CIVIL ENGINEER 1-2-13 DATE

1-22-13
PLANS APPROVAL DATE

REGISTERED PROFESSIONAL ENGINEER CHRIS ROCKEY No. C78030 Exp. 9/30/13 CIVIL STATE OF CALIFORNIA

THE STATE OF CALIFORNIA OR ITS OFFICERS OR AGENTS SHALL NOT BE RESPONSIBLE FOR THE ACCURACY OR COMPLETENESS OF SCANNED COPIES OF THIS PLAN SHEET.

NOTES:

1. FOR ACCURATE RIGHT OF WAY DATA, CONTACT RIGHT OF WAY ENGINEERING AT THE DISTRICT OFFICE.

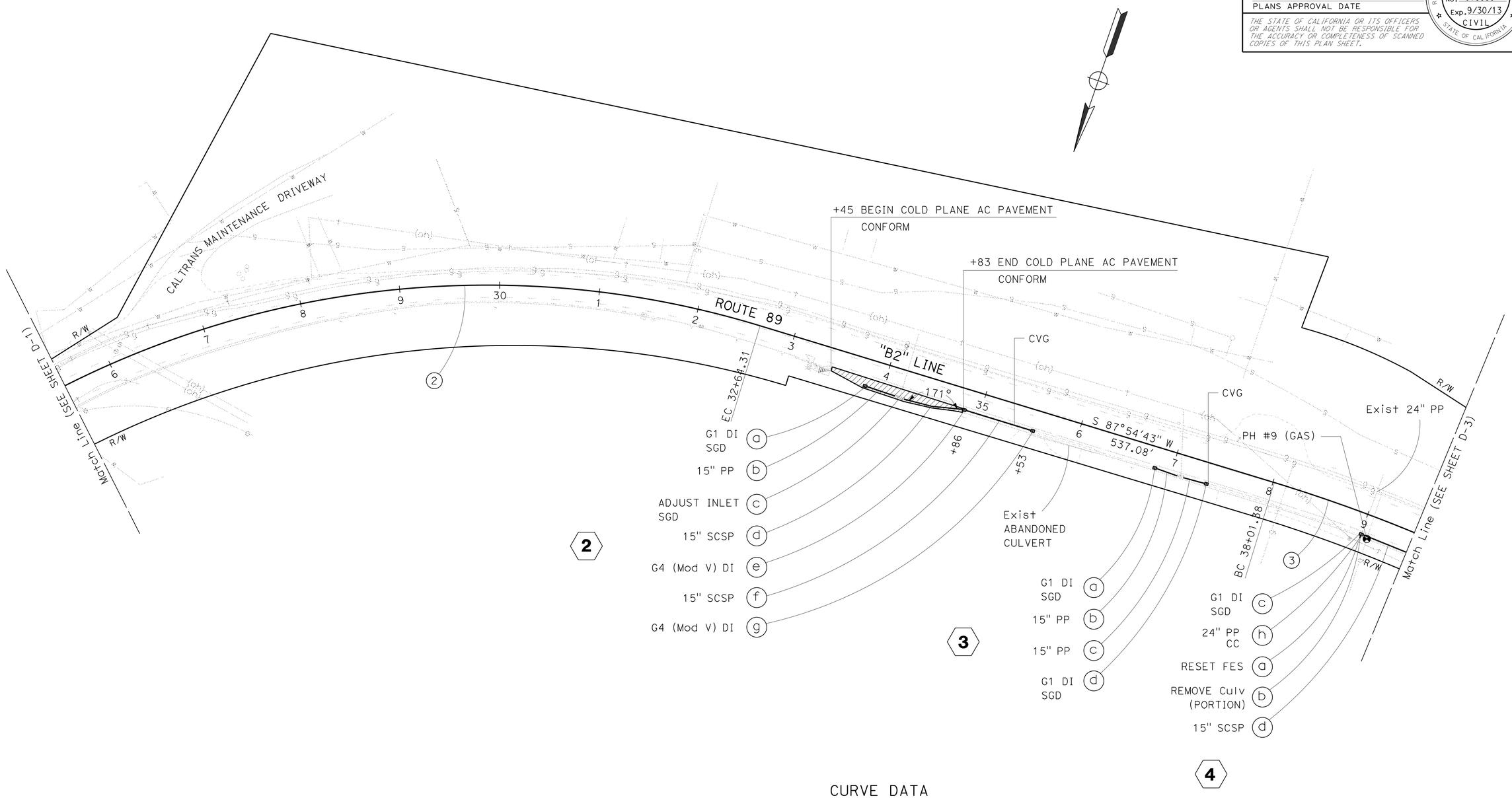

CURVE DATA

No. #	R	Δ	T	L
2	935′	48°56′48"	425.60′	798.78′
3	1558′	11°49′59"	161.50′	321.85′

DRAINAGE PLAN

SCALE: 1" = 50′

D-2

STATE OF CALIFORNIA - DEPARTMENT OF TRANSPORTATION
DIVISION OF ENGINEERING
Caltrans

FUNCTIONAL SUPERVISOR: DENNIS JAGODA
CALCULATED-DESIGNED BY: CHRIS ROCKEY
CHECKED BY: MIKE DEWALL
REVISED BY
DATE REVISED

LAST REVISION 00-00-00
DATE PLOTTED => 24-JAN-2013
TIME PLOTTED => 16:56

Dist	COUNTY	ROUTE	POST MILES TOTAL PROJECT	SHEET No.	TOTAL SHEETS
03	Pla	89	T8.6/10.9	5	34

REGISTERED CIVIL ENGINEER 1-2-13 DATE

1-22-13
PLANS APPROVAL DATE

REGISTERED PROFESSIONAL ENGINEER CHRIS ROCKEY No. C78030 Exp. 9/30/13 CIVIL STATE OF CALIFORNIA

THE STATE OF CALIFORNIA OR ITS OFFICERS OR AGENTS SHALL NOT BE RESPONSIBLE FOR THE ACCURACY OR COMPLETENESS OF SCANNED COPIES OF THIS PLAN SHEET.

NOTES:

1. FOR ACCURATE RIGHT OF WAY DATA, CONTACT RIGHT OF WAY ENGINEERING AT THE DISTRICT OFFICE.
2. ITEMS "c" AND "d" OF DRAINAGE SYSTEM 7 HAVE BEEN OMITTED.

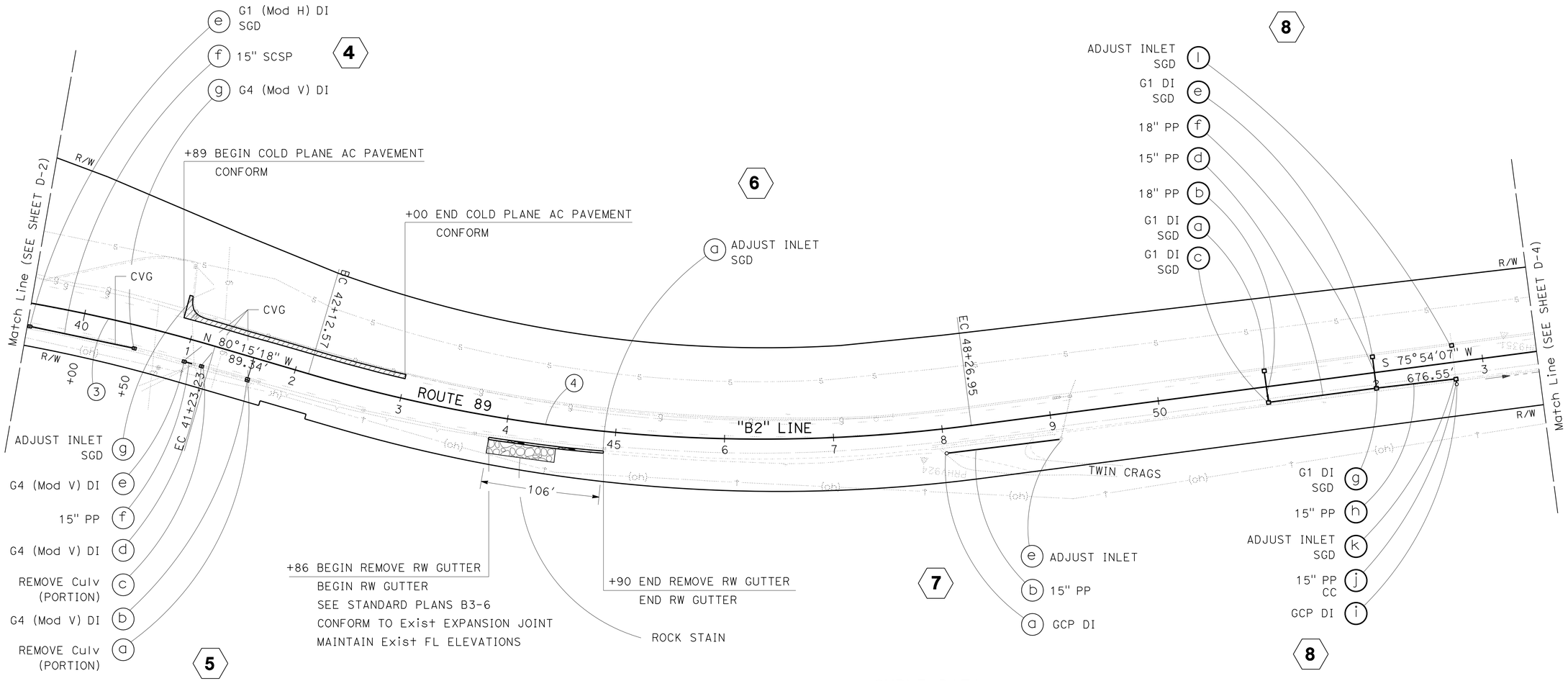

CURVE DATA

No. (#)	R	Δ	T	L
3	1558′	11°49′59"	161.50′	321.85′
4	1476′	23°50′35"	311.70′	614.38′

DRAINAGE PLAN

SCALE: 1" = 50′

D-3

STATE OF CALIFORNIA - DEPARTMENT OF TRANSPORTATION
DIVISION OF ENGINEERING
Caltrans

FUNCTIONAL SUPERVISOR: DENNIS JAGODA
CALCULATED-DESIGNED BY: CHRIS ROCKEY
CHECKED BY: MIKE DEWALL
REVISED BY
DATE REVISED

LAST REVISION 00-00-00
DATE PLOTTED => 24-JAN-2013
TIME PLOTTED => 16:56

Dist	COUNTY	ROUTE	POST MILES TOTAL PROJECT	SHEET No.	TOTAL SHEETS
03	Pla	89	T8.6/10.9	6	34

REGISTERED CIVIL ENGINEER 1-2-13 DATE

1-22-13
PLANS APPROVAL DATE

REGISTERED PROFESSIONAL ENGINEER CHRIS ROCKEY No. C78030 Exp. 9/30/13 CIVIL STATE OF CALIFORNIA

THE STATE OF CALIFORNIA OR ITS OFFICERS OR AGENTS SHALL NOT BE RESPONSIBLE FOR THE ACCURACY OR COMPLETENESS OF SCANNED COPIES OF THIS PLAN SHEET.

NOTES:

1. FOR ACCURATE RIGHT OF WAY DATA, CONTACT RIGHT OF WAY ENGINEERING AT THE DISTRICT OFFICE.

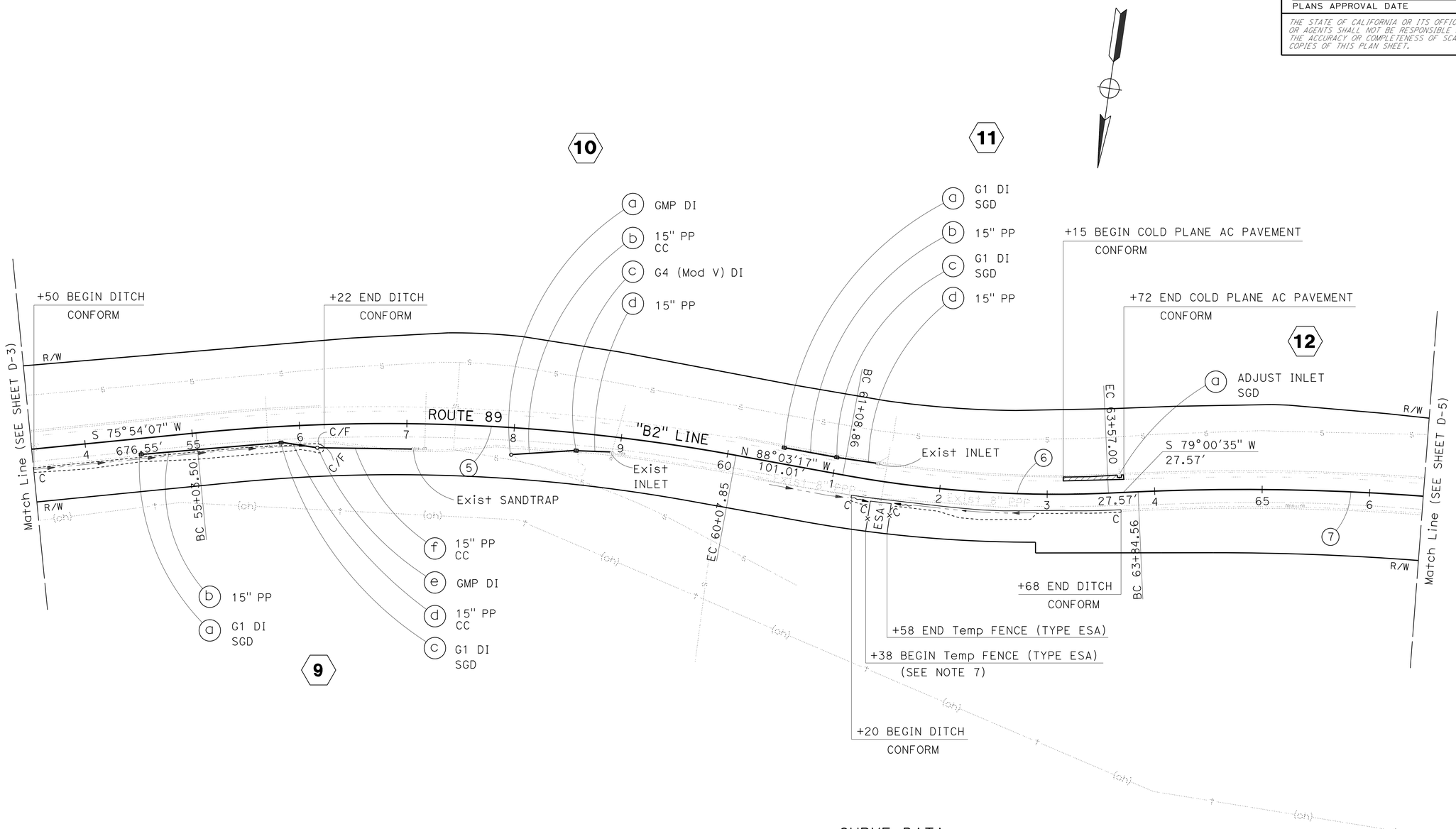

CURVE DATA

No. #	R	Δ	T	L
5	1801′	16°2′37"	253.84′	504.35′
6	1099′	12°56′08"	124.60′	248.14′
7	2215′	9°34′14"	185.39′	369.91′

DRAINAGE PLAN

SCALE: 1" = 50′

D-4

STATE OF CALIFORNIA - DEPARTMENT OF TRANSPORTATION
DIVISION OF ENGINEERING
Caltrans

FUNCTIONAL SUPERVISOR: DENNIS JAGODA
CALCULATED-DESIGNED BY: CHRIS ROCKEY
CHECKED BY: MIKE DEWALL
REVISED BY
DATE REVISED

LAST REVISION 00-00-00
DATE PLOTTED => 24-JAN-2013
TIME PLOTTED => 16:56

Dist	COUNTY	ROUTE	POST MILES TOTAL PROJECT	SHEET No.	TOTAL SHEETS
03	Pla	89	T8.6/10.9	7	34

REGISTERED CIVIL ENGINEER 1-2-13 DATE

1-22-13
PLANS APPROVAL DATE

REGISTERED PROFESSIONAL ENGINEER CHRIS ROCKEY No. C78030 Exp. 9/30/13 CIVIL STATE OF CALIFORNIA

THE STATE OF CALIFORNIA OR ITS OFFICERS OR AGENTS SHALL NOT BE RESPONSIBLE FOR THE ACCURACY OR COMPLETENESS OF SCANNED COPIES OF THIS PLAN SHEET.

NOTES:

1. FOR ACCURATE RIGHT OF WAY DATA, CONTACT RIGHT OF WAY ENGINEERING AT THE DISTRICT OFFICE.

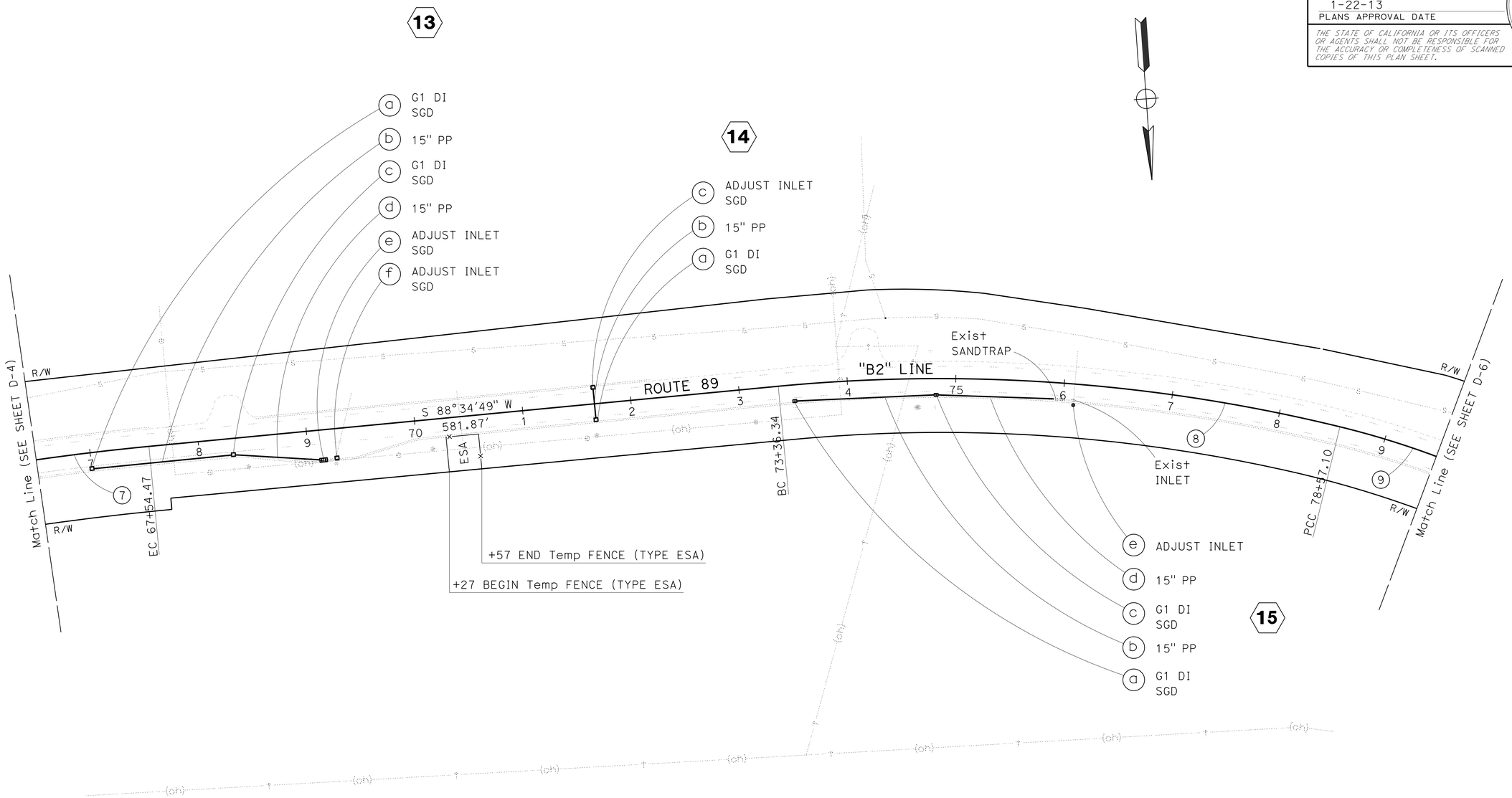

CURVE DATA

No. ⑦	R	Δ	T	L
⑦	2215′	9°34′14"	185.39′	369.91′
⑧	1556′	19°10′48"	262.84′	520.76′
⑨	788′	15°35′37"	107.92′	214.51′

DRAINAGE PLAN

SCALE: 1" = 50′

D-5

STATE OF CALIFORNIA - DEPARTMENT OF TRANSPORTATION
DIVISION OF ENGINEERING
Caltrans

FUNCTIONAL SUPERVISOR: DENNIS JAGODA
CALCULATED-DESIGNED BY: CHRIS ROCKEY
CHECKED BY: MIKE DEWALL
REVISED BY
DATE REVISED

LAST REVISION 00-00-00
DATE PLOTTED => 24-JAN-2013
TIME PLOTTED => 16:56

Dist	COUNTY	ROUTE	POST MILES TOTAL PROJECT	SHEET No.	TOTAL SHEETS
03	Pla	89	T8.6/10.9	8	34

REGISTERED CIVIL ENGINEER 1-2-13 DATE

1-22-13
PLANS APPROVAL DATE

REGISTERED PROFESSIONAL ENGINEER CHRIS ROCKEY No. C78030 Exp. 9/30/13 CIVIL STATE OF CALIFORNIA

THE STATE OF CALIFORNIA OR ITS OFFICERS OR AGENTS SHALL NOT BE RESPONSIBLE FOR THE ACCURACY OR COMPLETENESS OF SCANNED COPIES OF THIS PLAN SHEET.

NOTES:

1. FOR ACCURATE RIGHT OF WAY DATA, CONTACT RIGHT OF WAY ENGINEERING AT THE DISTRICT OFFICE.

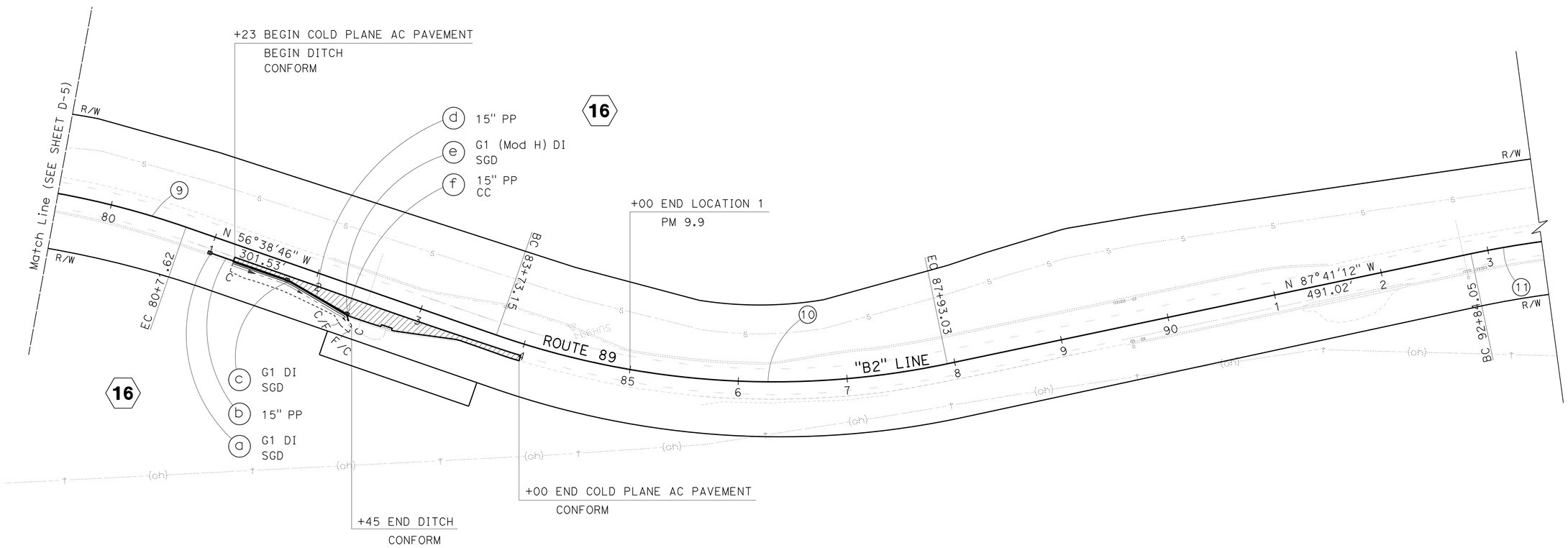

CURVE DATA

No. ⑨	R	Δ	T	L
⑨	788′	15°35′37"	107.92′	214.51′
⑩	775′	31°2′26"	215.23′	419.88′
⑪	900′	22°44′55"	181.05′	357.34′

DRAINAGE PLAN

SCALE: 1" = 50′

D-6

STATE OF CALIFORNIA - DEPARTMENT OF TRANSPORTATION
Caltrans
DIVISION OF ENGINEERING

FUNCTIONAL SUPERVISOR: DENNIS JAGODA
CALCULATED-DESIGNED BY: CHRIS ROCKEY
CHECKED BY: MIKE DEWALL
REVISED BY
DATE REVISED

LAST REVISION 00-00-00
DATE PLOTTED => 24-JAN-2013
TIME PLOTTED => 16:56

Dist	COUNTY	ROUTE	POST MILES TOTAL PROJECT	SHEET No.	TOTAL SHEETS
03	Pla	89	T8.6/10.9	9	34

REGISTERED CIVIL ENGINEER 1-2-13 DATE

1-22-13
PLANS APPROVAL DATE

REGISTERED PROFESSIONAL ENGINEER CHRIS ROCKEY No. C78030 Exp. 9/30/13 CIVIL STATE OF CALIFORNIA

THE STATE OF CALIFORNIA OR ITS OFFICERS OR AGENTS SHALL NOT BE RESPONSIBLE FOR THE ACCURACY OR COMPLETENESS OF SCANNED COPIES OF THIS PLAN SHEET.

NOTES:

1. FOR ACCURATE RIGHT OF WAY DATA, CONTACT RIGHT OF WAY ENGINEERING AT THE DISTRICT OFFICE.

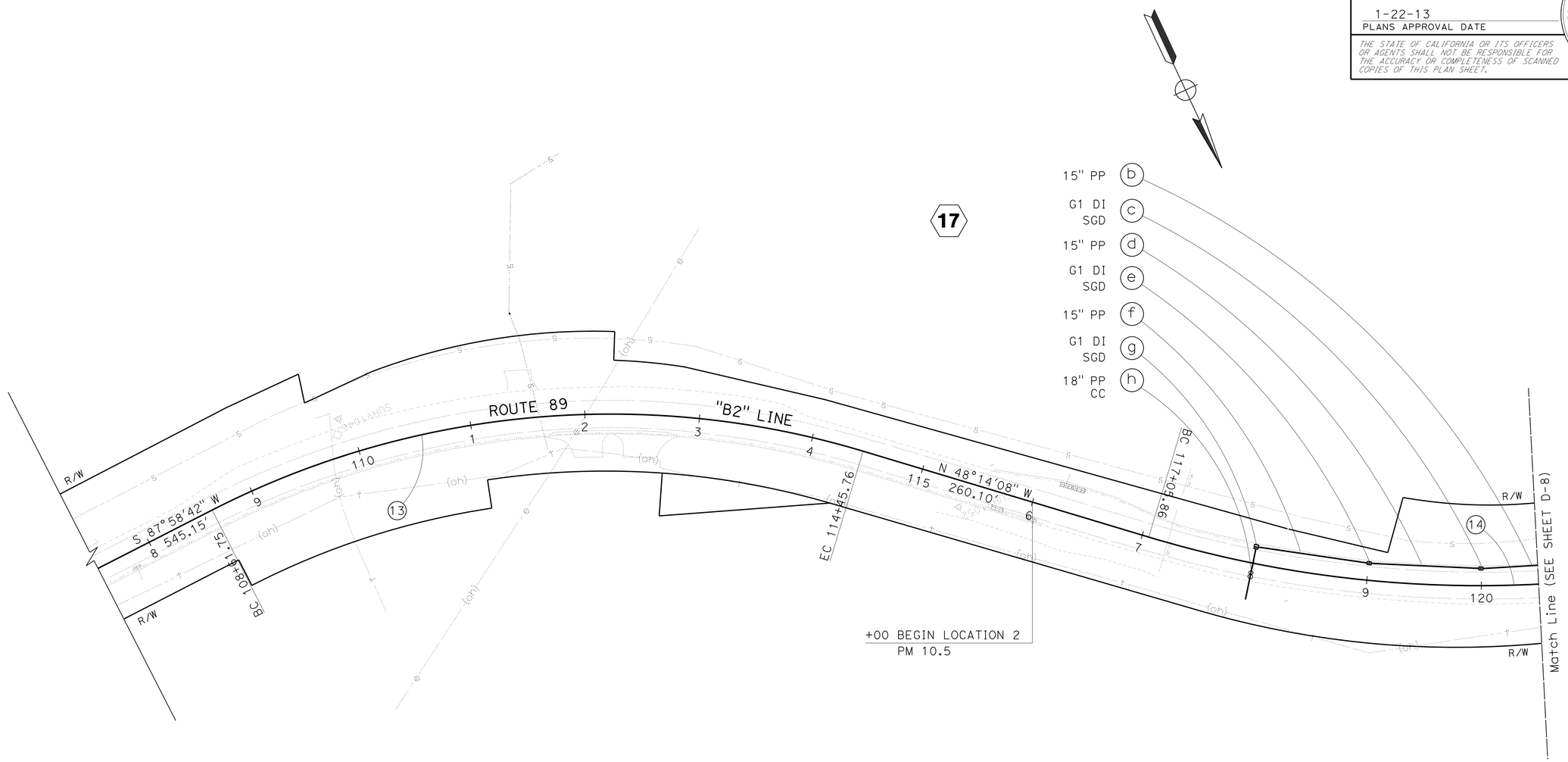

CURVE DATA

No. (#)	R	Δ	T	L
13	764′	43°47′09″	307.10′	584.01′
14	1001′	29°39′33″	264.94′	517.99′

DRAINAGE PLAN

SCALE: 1" = 50′

D-7

STATE OF CALIFORNIA - DEPARTMENT OF TRANSPORTATION
Caltrans
DIVISION OF ENGINEERING

FUNCTIONAL SUPERVISOR: DENNIS JAGODA

CALCULATED-DESIGNED BY: CHRIS ROCKEY
CHECKED BY: MIKE DEWALL

REVISED BY
DATE REVISED

LAST REVISION 00-00-00
DATE PLOTTED => 24-JAN-2013
TIME PLOTTED => 16:56

Dist	COUNTY	ROUTE	POST MILES TOTAL PROJECT	SHEET No.	TOTAL SHEETS
03	Pla	89	T8.6/10.9	10	34

REGISTERED CIVIL ENGINEER 1-2-13 DATE

1-22-13
PLANS APPROVAL DATE

REGISTERED PROFESSIONAL ENGINEER CHRIS ROCKEY No. C78030 Exp. 9/30/13 CIVIL STATE OF CALIFORNIA

THE STATE OF CALIFORNIA OR ITS OFFICERS OR AGENTS SHALL NOT BE RESPONSIBLE FOR THE ACCURACY OR COMPLETENESS OF SCANNED COPIES OF THIS PLAN SHEET.

NOTES:

1. FOR ACCURATE RIGHT OF WAY DATA, CONTACT RIGHT OF WAY ENGINEERING AT THE DISTRICT OFFICE.

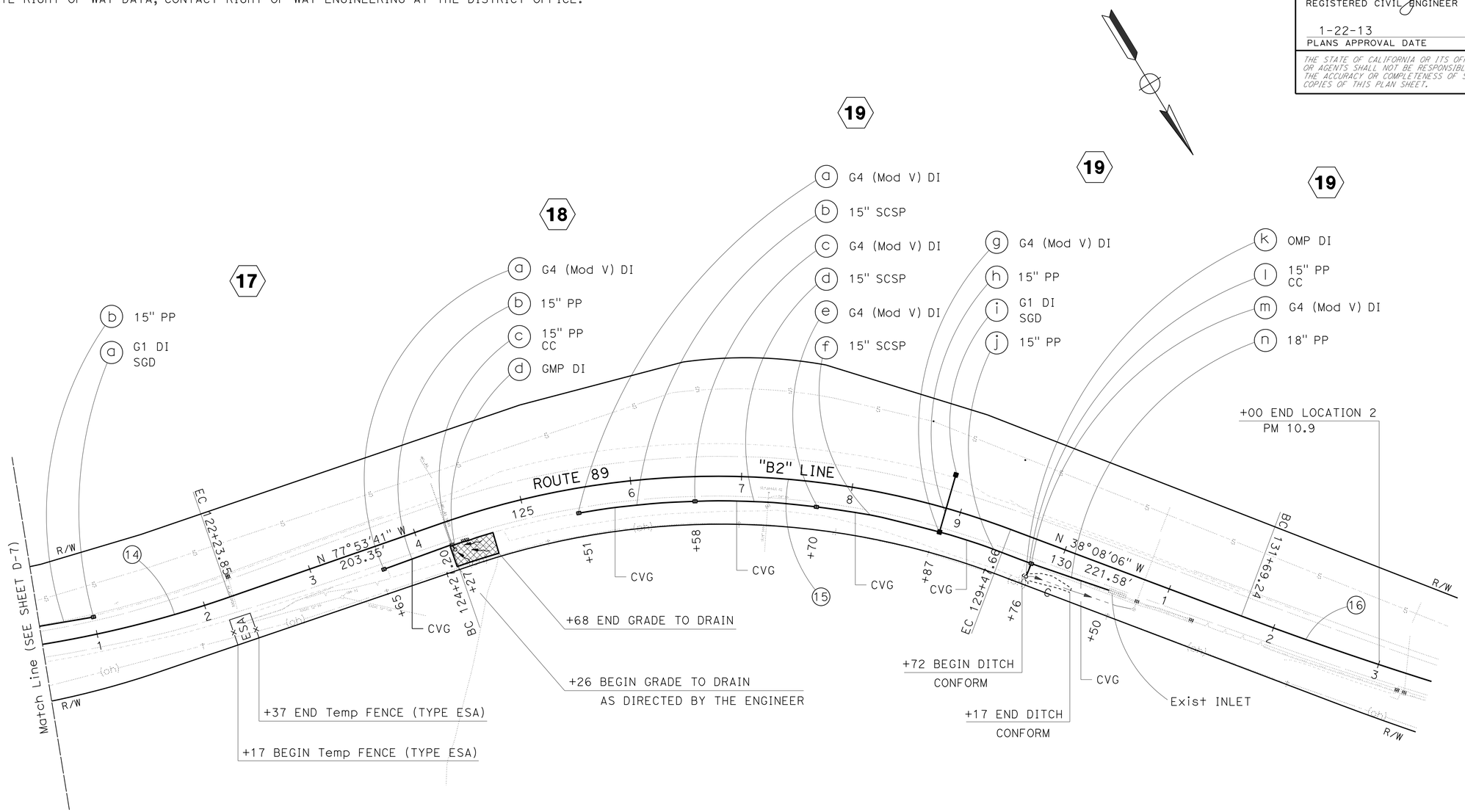

CURVE DATA

No. ⓝ	R	Δ	T	L
14	1001′	29°39′33"	264.94′	517.99′
15	750′	39°45′35"	271.20′	520.45′
16	3281′	8°55′28"	256.03′	511.02′

DRAINAGE PLAN

SCALE: 1" = 50′

D-8

STATE OF CALIFORNIA - DEPARTMENT OF TRANSPORTATION
DIVISION OF ENGINEERING
Caltrans

FUNCTIONAL SUPERVISOR: DENNIS JAGODA
CHRIS ROCKEY
MIKE DEWALL
CALCULATED-DESIGNED BY
CHECKED BY
REVISED BY
DATE REVISED

LAST REVISION 00-00-00
DATE PLOTTED => 24-JAN-2013
TIME PLOTTED => 16:56

Dist	COUNTY	ROUTE	POST MILES TOTAL PROJECT	SHEET No.	TOTAL SHEETS
03	Pla	89	T8.6/10.9	11	34

REGISTERED CIVIL ENGINEER 1-2-13 DATE

1-22-13
PLANS APPROVAL DATE

REGISTERED PROFESSIONAL ENGINEER CHRIS ROCKEY No. C78030 Exp. 9/30/13 CIVIL STATE OF CALIFORNIA

THE STATE OF CALIFORNIA OR ITS OFFICERS OR AGENTS SHALL NOT BE RESPONSIBLE FOR THE ACCURACY OR COMPLETENESS OF SCANNED COPIES OF THIS PLAN SHEET.

NOTES:

1. FOR THE DI STATION & OFFSET SEE THE STATION/OFFSET MEASUREMENT DETAIL ON DRAINAGE DETAILS
2. MANHOLE STATION & OFFSET IS TO CENTER OF STRUCTURE.
3. A SGD IS INCLUDED IN THE DI GRATE & FL ELEVATIONS AS SHOWN ON THE PLANS. SEE STANDARD PLAN D78A D78B AND D78C.
4. CONTRACTOR SHALL VERIFY ALL EXISTING PIPES & STRUCTURES PRIOR TO CASTING DRAINAGE INLETS.
5. UTILITY LOCATIONS ARE APPROXIMATE ONLY. CONTRACTOR TO VERIFY ALL POTENTIAL CONFLICTS PRIOR TO CONSTRUCTION.
6. THERE ARE ELECTRIC, TELEPHONE AND WATER UTILITIES AT THIS LOCATION APPROXIMATELY PARALLEL TO THE PROPOSED DRAINAGE SYSTEM.
7. FOR PP USE HIGH DENSITY POLYETHYLENE PIPE WITH A SMOOTH INTERIOR.
8. H IS MEASURED FROM THE TOP OF THE DRAINAGE INLET GRATE TO THE LOWEST CULVERT FLOW LINE.
9. SAWCUT THE ENTIRE PAVED PERIMETER OF THE TRENCH PRIOR TO EXCAVATION.

ABBREVIATIONS:

SGD = STANDARD GUTTER DEPRESSION, SEE STANDARD PLANS D78A.

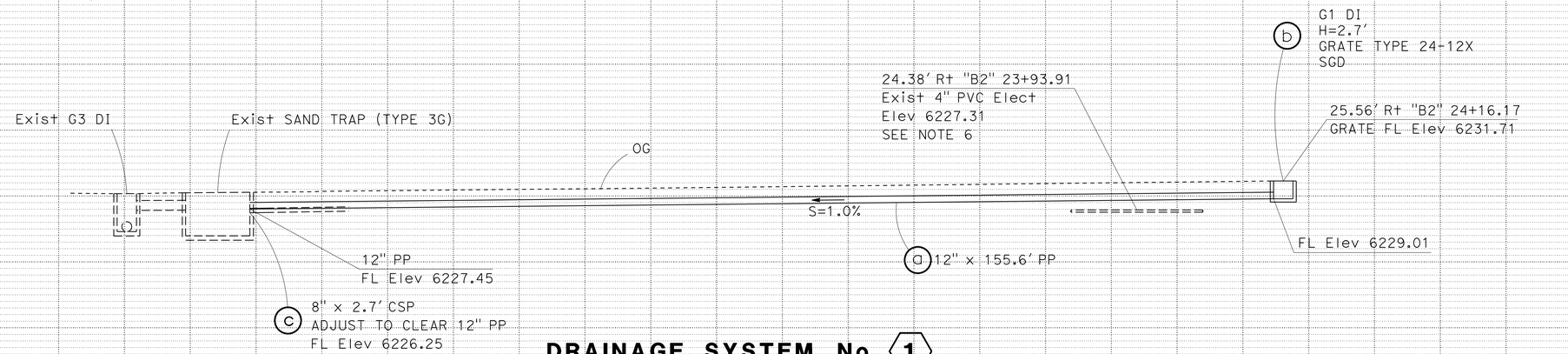

DRAINAGE SYSTEM No. 1

"B2" 22+59.09 TO "B2" 24+18.13

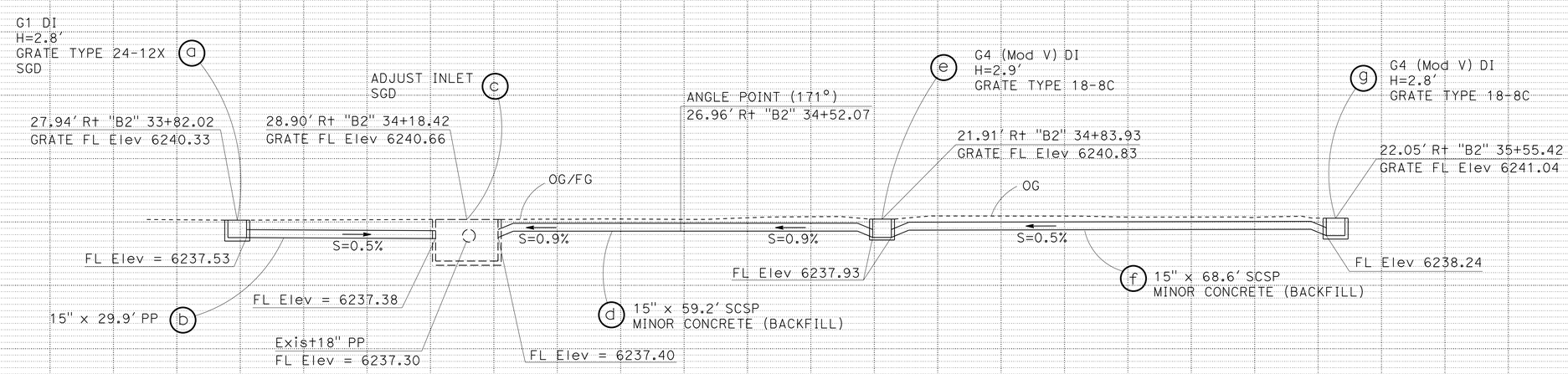

DRAINAGE SYSTEM No. 2

"B2" 33+80.11 TO "B2" 35+57.41

DRAINAGE PROFILES

SCALE: Horiz 1" = 10'
Vert 1" = 10'

DP-1

STATE OF CALIFORNIA - DEPARTMENT OF TRANSPORTATION
Caltrans

FUNCTIONAL SUPERVISOR: DENNIS JAGODA
CALCULATED-DESIGNED BY: CHRIS ROCKEY
CHECKED BY: MIKE DEWALL
REVISED BY / DATE REVISED

LAST REVISION 00-00-00
DATE PLOTTED => 24-JAN-2013
TIME PLOTTED => 16:56

Dist	COUNTY	ROUTE	POST MILES TOTAL PROJECT	SHEET No.	TOTAL SHEETS
03	Pla	89	T8.6/10.9	12	34

REGISTERED CIVIL ENGINEER 1-2-13 DATE

1-22-13
PLANS APPROVAL DATE

REGISTERED PROFESSIONAL ENGINEER CHRIS ROCKEY No. C78030 Exp. 9/30/13 CIVIL STATE OF CALIFORNIA

THE STATE OF CALIFORNIA OR ITS OFFICERS OR AGENTS SHALL NOT BE RESPONSIBLE FOR THE ACCURACY OR COMPLETENESS OF SCANNED COPIES OF THIS PLAN SHEET.

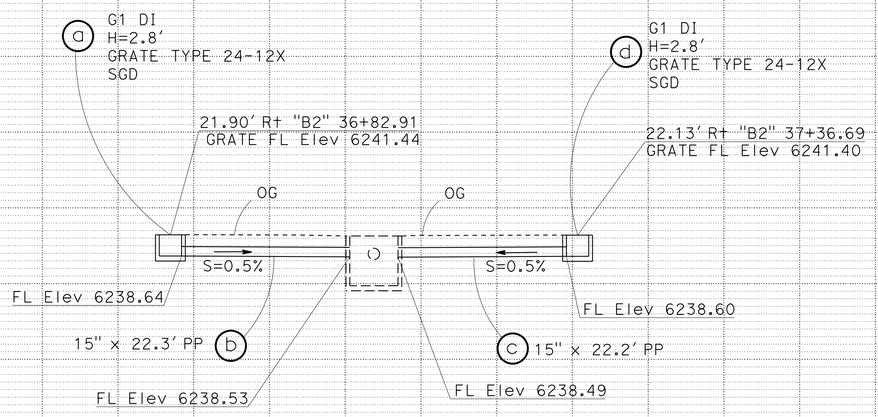

DRAINAGE SYSTEM No. 3

"B2" 36+80.90 TO "B2" 37+38.75

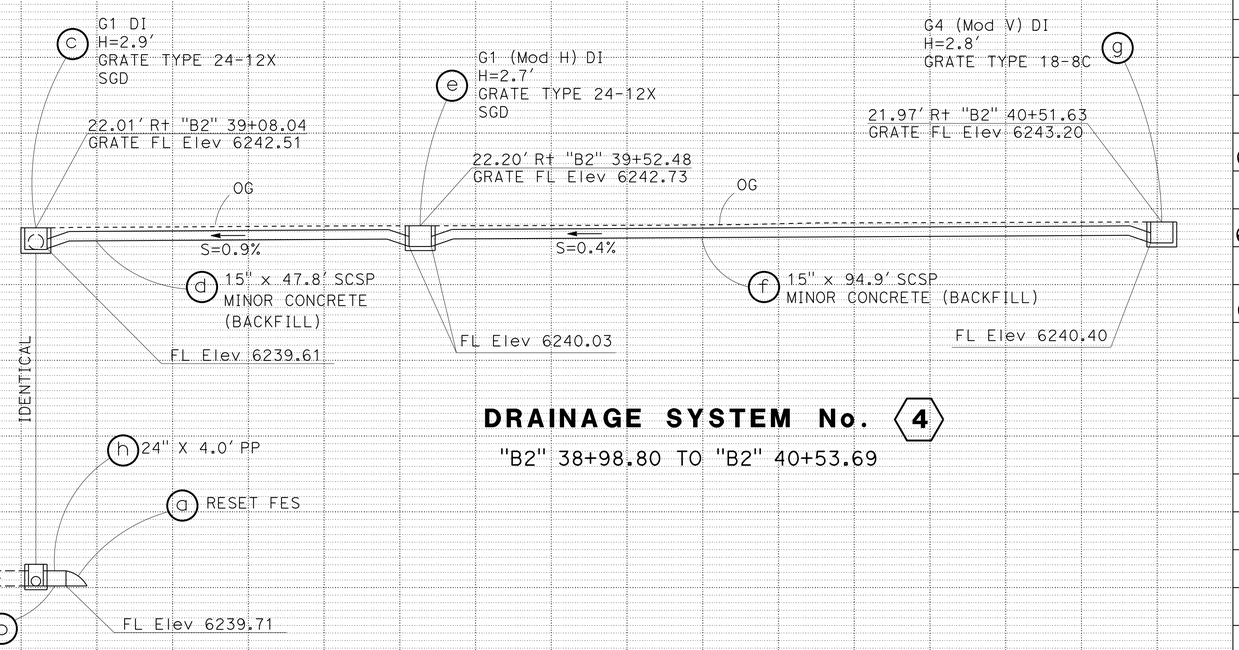

DRAINAGE SYSTEM No. 4

"B2" 38+98.80 TO "B2" 40+53.69

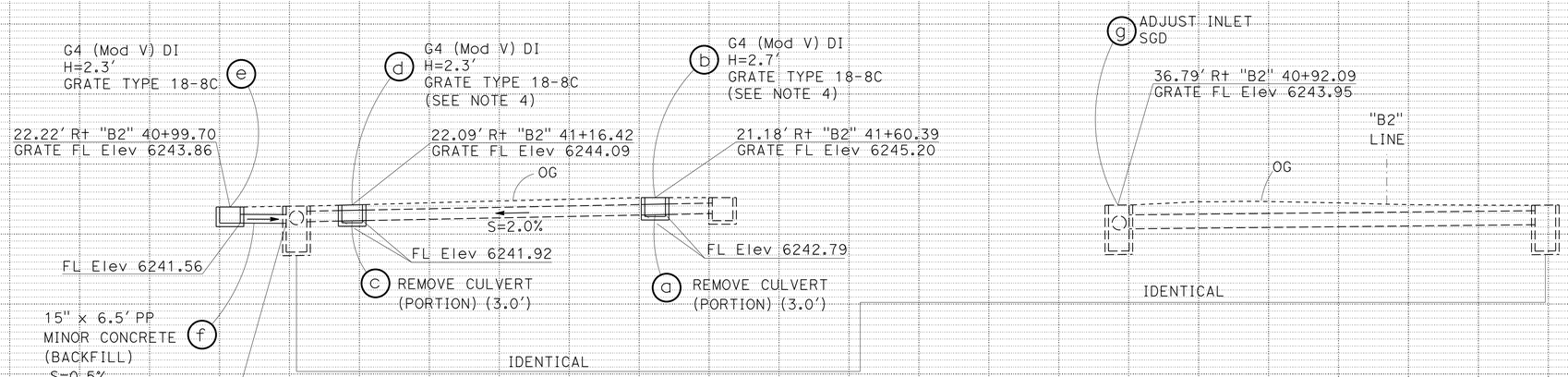

DRAINAGE SYSTEM No. 5

"B2" 40+91.64 TO "B2" 41+62.29

DRAINAGE PROFILES

SCALE: Horiz 1" = 10'
Vert 1" = 10'

DP-2

REVISED BY | DATE REVISED

CHRIS ROCKEY | MIKE DEWALL

CALCULATED-DESIGNED BY | CHECKED BY

FUNCTIONAL SUPERVISOR: DENNIS JAGODA

STATE OF CALIFORNIA - DEPARTMENT OF TRANSPORTATION

Caltrans

LAST REVISION 00-00-00 | DATE PLOTTED => 24-JAN-2013 | TIME PLOTTED => 16:56

Dist	COUNTY	ROUTE	POST MILES TOTAL PROJECT	SHEET No.	TOTAL SHEETS
03	Pla	89	T8.6/10.9	13	34

REGISTERED CIVIL ENGINEER 1-2-13 DATE

1-22-13
PLANS APPROVAL DATE

REGISTERED PROFESSIONAL ENGINEER CHRIS ROCKEY No. C78030 Exp. 9/30/13 CIVIL STATE OF CALIFORNIA

THE STATE OF CALIFORNIA OR ITS OFFICERS OR AGENTS SHALL NOT BE RESPONSIBLE FOR THE ACCURACY OR COMPLETENESS OF SCANNED COPIES OF THIS PLAN SHEET.

NOTES:

1. ITEMS "c" AND "d" OF DRAINAGE SYSTEM 7 HAVE BEEN OMITTED.
2. NO DRAINAGE PROFILE FOR DRAINAGE SYSTEM 6 (SEE DRAINAGE DETAILS).

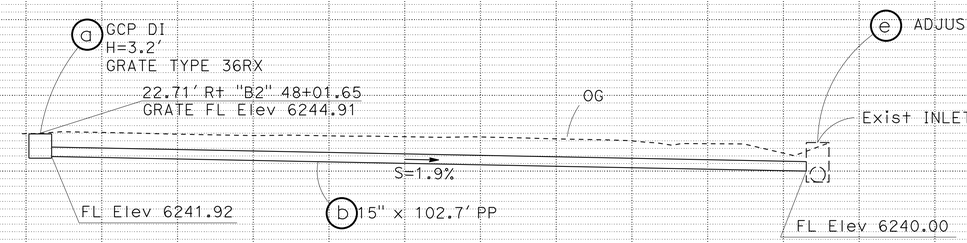

DRAINAGE SYSTEM No. 7

"B2" 48+00.00 TO "B2" 49+08.58

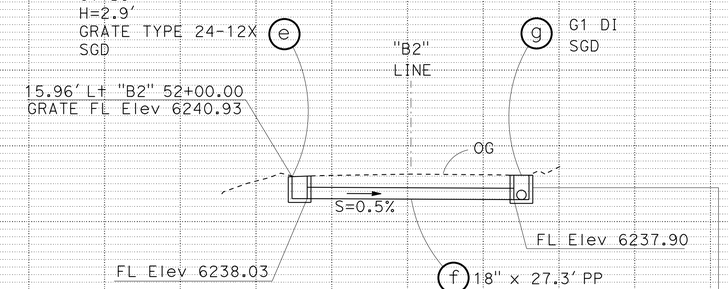

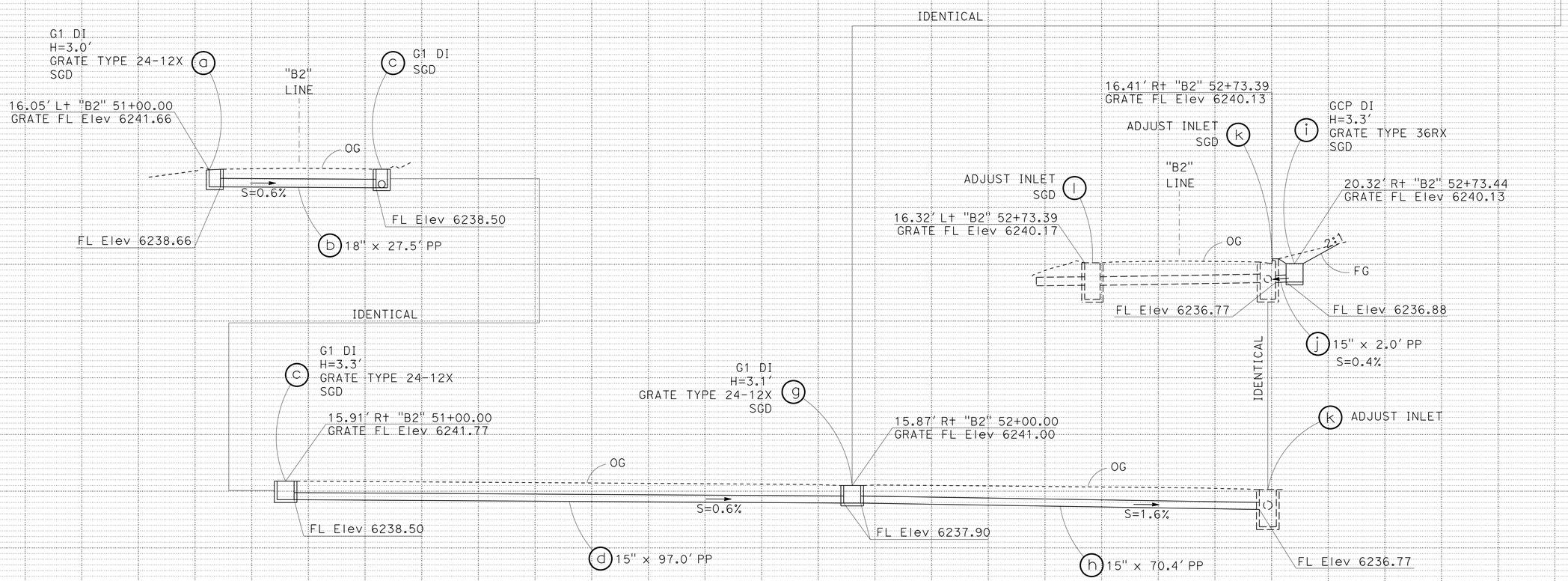

DRAINAGE SYSTEM No. 8

"B2" 50+98.13 TO "B2" 52+75.43

DRAINAGE PROFILES

SCALE: Horiz 1" = 10'
Vert 1" = 10'

DP-3

REVISED BY | DATE REVISED
CHRIS ROCKEY | MIKE DEWALL
CALCULATED-DESIGNED BY | CHECKED BY
FUNCTIONAL SUPERVISOR: DENNIS JAGODA
STATE OF CALIFORNIA - DEPARTMENT OF TRANSPORTATION
Caltrans

LAST REVISION 00-00-00 | DATE PLOTTED => 24-JAN-2013 | TIME PLOTTED => 16:56

Dist	COUNTY	ROUTE	POST MILES TOTAL PROJECT	SHEET No.	TOTAL SHEETS
03	Pla	89	T8.6/10.9	14	34

REGISTERED CIVIL ENGINEER 1-2-13 DATE

1-22-13
PLANS APPROVAL DATE

REGISTERED PROFESSIONAL ENGINEER CHRIS ROCKEY No. C78030 Exp. 9/30/13 CIVIL STATE OF CALIFORNIA

THE STATE OF CALIFORNIA OR ITS OFFICERS OR AGENTS SHALL NOT BE RESPONSIBLE FOR THE ACCURACY OR COMPLETENESS OF SCANNED COPIES OF THIS PLAN SHEET.

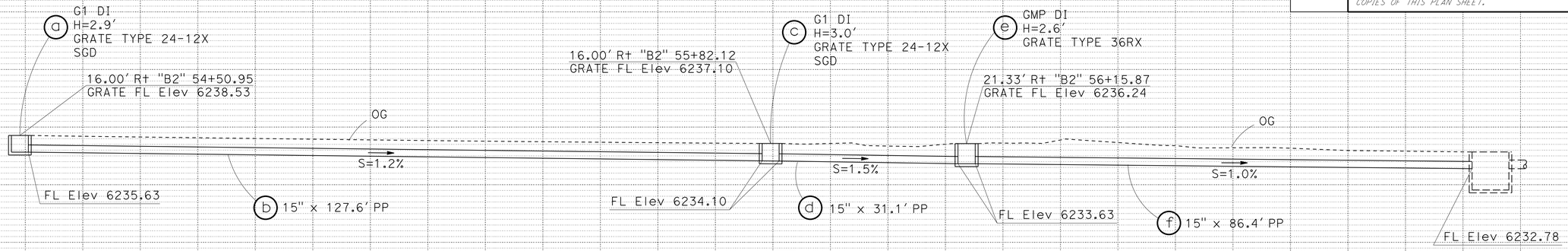

DRAINAGE SYSTEM No. 9

"B2" 54+48.98 TO "B2" 57+04.84

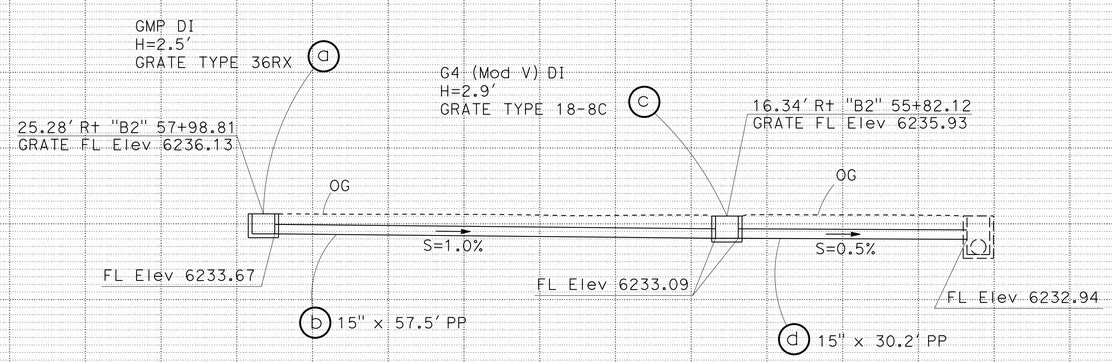

DRAINAGE SYSTEM No. 10

"B2" 57+97.16 TO "B2" 58+91.19

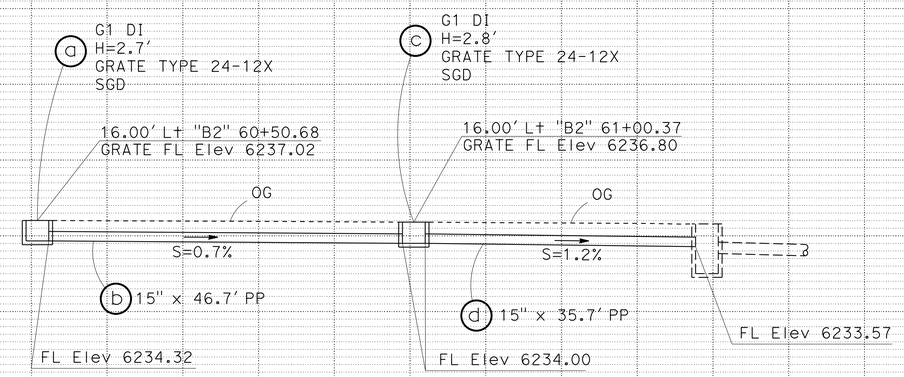

DRAINAGE SYSTEM No. 11

"B2" 60+48.74 TO "B2" 61+37.90

DRAINAGE PROFILES

SCALE: Horiz 1" = 10'
Vert 1" = 10'

DP-4

REVISED BY | DATE REVISED
CHRIS ROCKEY | MIKE DEWALL
CALCULATED-DESIGNED BY | CHECKED BY
FUNCTIONAL SUPERVISOR | DENNIS JAGODA
STATE OF CALIFORNIA - DEPARTMENT OF TRANSPORTATION
Caltrans

LAST REVISION 00-00-00 | DATE PLOTTED => 24-JAN-2013 | TIME PLOTTED => 16:56

Dist	COUNTY	ROUTE	POST MILES TOTAL PROJECT	SHEET No.	TOTAL SHEETS
03	Pla	89	T8.6/10.9	15	34

REGISTERED CIVIL ENGINEER 1-2-13 DATE

1-22-13
PLANS APPROVAL DATE

REGISTERED PROFESSIONAL ENGINEER CHRIS ROCKEY No. C78030 Exp. 9/30/13 CIVIL STATE OF CALIFORNIA

THE STATE OF CALIFORNIA OR ITS OFFICERS OR AGENTS SHALL NOT BE RESPONSIBLE FOR THE ACCURACY OR COMPLETENESS OF SCANNED COPIES OF THIS PLAN SHEET.

NOTES:

1. NO DRAINAGE PROFILE FOR DRAINAGE SYSTEM 12.

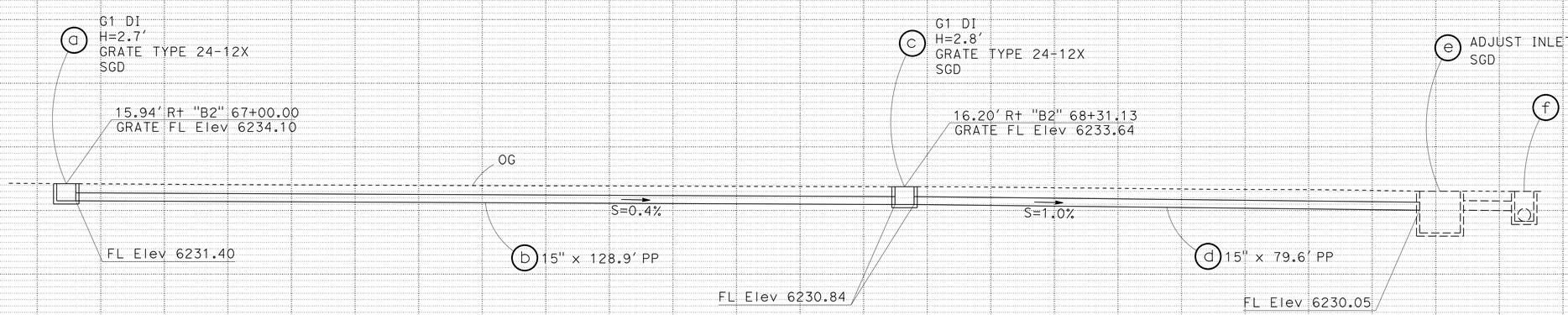

DRAINAGE SYSTEM No. 13

"B2" 66+97.95 TO "B2" 69+27.75

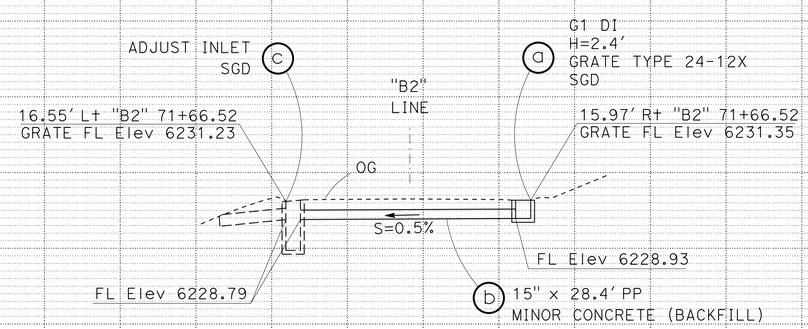

DRAINAGE SYSTEM No. 14

"B2" 71+66.42

DRAINAGE PROFILES

SCALE: Horiz 1" = 10'
Vert 1" = 10'

DP-5

REVISED BY | DATE REVISED
CHRIS ROCKEY | MIKE DEWALL
CALCULATED-DESIGNED BY | CHECKED BY
FUNCTIONAL SUPERVISOR | DENNIS JAGODA
STATE OF CALIFORNIA - DEPARTMENT OF TRANSPORTATION
Caltrans

LAST REVISION 00-00-00 | DATE PLOTTED => 24-JAN-2013 | TIME PLOTTED => 16:56

Dist	COUNTY	ROUTE	POST MILES TOTAL PROJECT	SHEET No.	TOTAL SHEETS
03	Pla	89	T8.6/10.9	16	34

REGISTERED CIVIL ENGINEER 1-2-13 DATE

1-22-13
PLANS APPROVAL DATE

REGISTERED PROFESSIONAL ENGINEER
CHRIS ROCKEY
No. C78030
Exp. 9/30/13
CIVIL
STATE OF CALIFORNIA

THE STATE OF CALIFORNIA OR ITS OFFICERS OR AGENTS SHALL NOT BE RESPONSIBLE FOR THE ACCURACY OR COMPLETENESS OF SCANNED COPIES OF THIS PLAN SHEET.

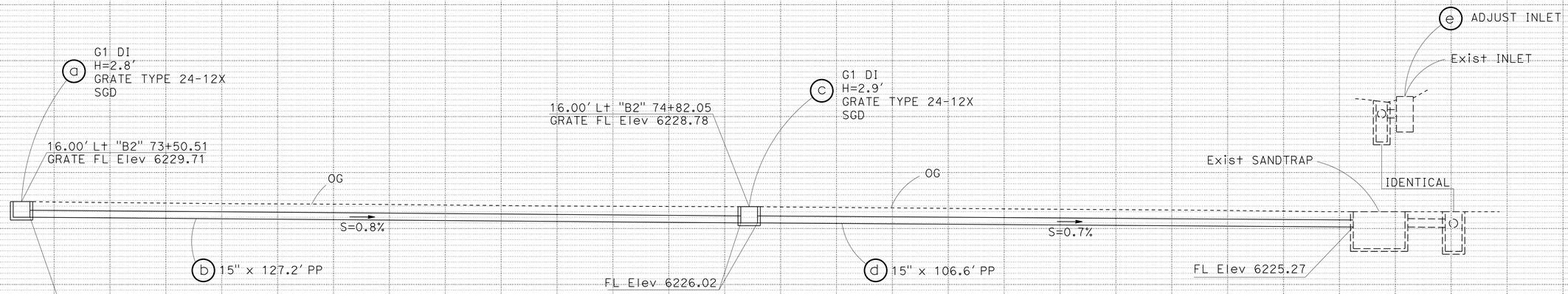

DRAINAGE SYSTEM No. 15

"B2" 73+48.42 TO "B2" 76+11.25

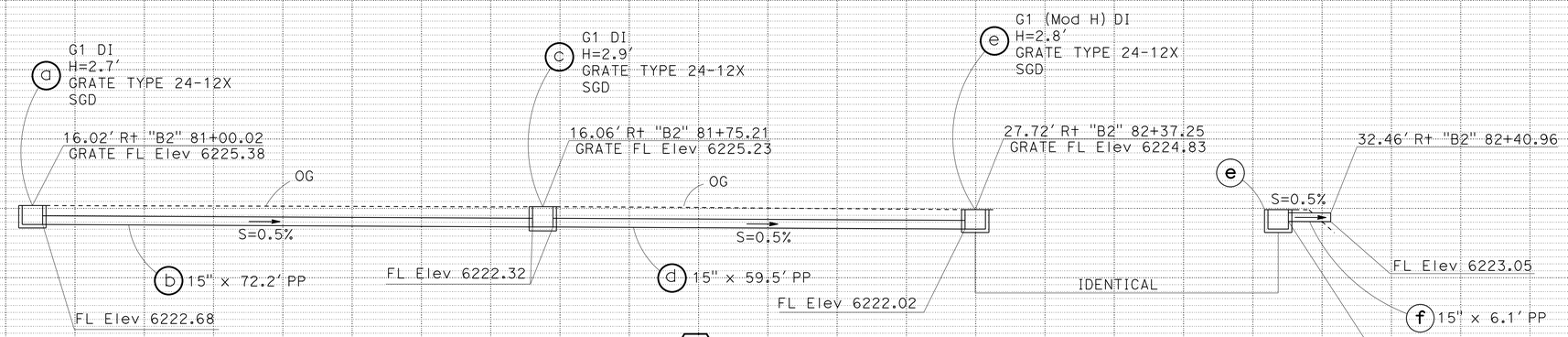

DRAINAGE SYSTEM No. 16

"B2" 80+98.04 TO "B2" 82+40.96

DRAINAGE PROFILES

SCALE: Horiz 1" = 10'
Vert 1" = 10'

DP-6

REVISED BY | DATE REVISED
CHRIS ROCKEY | MIKE DEWALL
CALCULATED-DESIGNED BY | CHECKED BY
FUNCTIONAL SUPERVISOR
DENNIS JAGODA

STATE OF CALIFORNIA - DEPARTMENT OF TRANSPORTATION
Caltrans

LAST REVISION 00-00-00 | DATE PLOTTED => 24-JAN-2013 | TIME PLOTTED => 16:56

Dist	COUNTY	ROUTE	POST MILES TOTAL PROJECT	SHEET No.	TOTAL SHEETS
03	Pla	89	T8.6/10.9	17	34

REGISTERED CIVIL ENGINEER 1-2-13 DATE

1-22-13
PLANS APPROVAL DATE

REGISTERED PROFESSIONAL ENGINEER CHRIS ROCKEY No. C78030 Exp. 9/30/13 CIVIL STATE OF CALIFORNIA

THE STATE OF CALIFORNIA OR ITS OFFICERS OR AGENTS SHALL NOT BE RESPONSIBLE FOR THE ACCURACY OR COMPLETENESS OF SCANNED COPIES OF THIS PLAN SHEET.

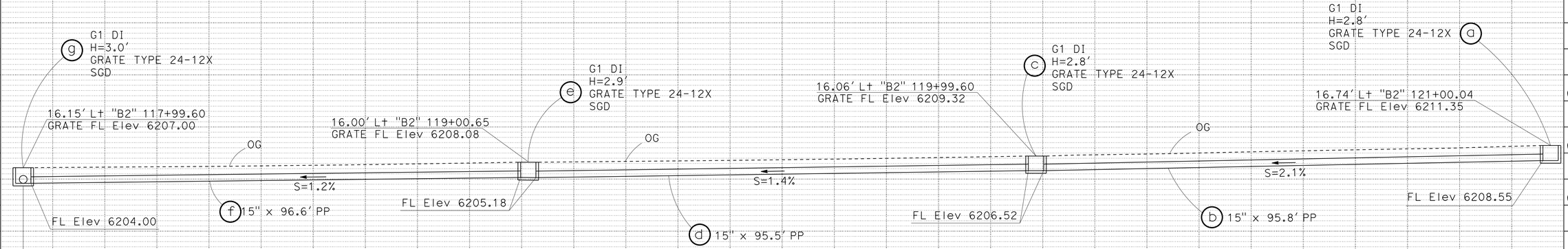

IDENTICAL

DRAINAGE SYSTEM No. 17

"B2" 117+97.59 TO "B2" 121+02.04

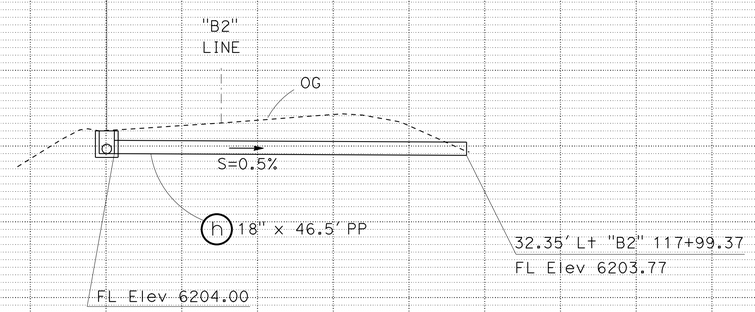

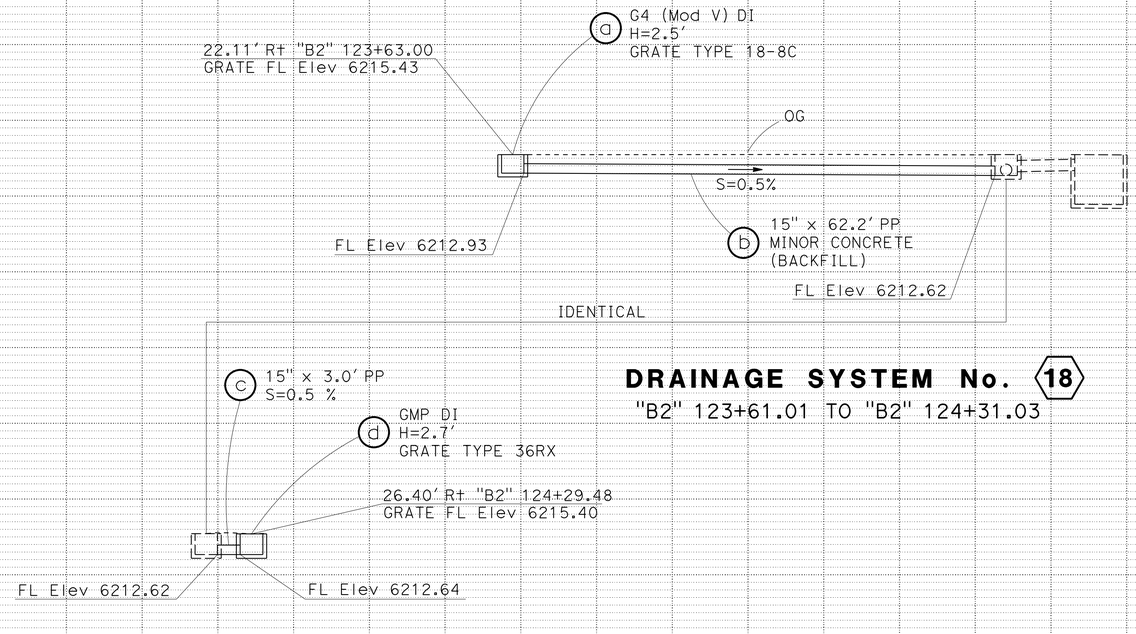

DRAINAGE SYSTEM No. 18

"B2" 123+61.01 TO "B2" 124+31.03

DRAINAGE PROFILES

SCALE: Horiz 1" = 10'
Vert 1" = 10'

DP-7

REVISED BY | DATE REVISED
CHRIS ROCKEY | MIKE DEWALL
CALCULATED-DESIGNED BY | CHECKED BY
FUNCTIONAL SUPERVISOR | DENNIS JAGODA
STATE OF CALIFORNIA - DEPARTMENT OF TRANSPORTATION
Caltrans

LAST REVISION 00-00-00 | DATE PLOTTED => 24-JAN-2013 | TIME PLOTTED => 16:56

Dist	COUNTY	ROUTE	POST MILES TOTAL PROJECT	SHEET No.	TOTAL SHEETS
03	Pla	89	T8.6/10.9	18	34

REGISTERED CIVIL ENGINEER 1-2-13 DATE

1-22-13
PLANS APPROVAL DATE

REGISTERED PROFESSIONAL ENGINEER CHRIS ROCKEY No. C78030 Exp. 9/30/13 CIVIL STATE OF CALIFORNIA

THE STATE OF CALIFORNIA OR ITS OFFICERS OR AGENTS SHALL NOT BE RESPONSIBLE FOR THE ACCURACY OR COMPLETENESS OF SCANNED COPIES OF THIS PLAN SHEET.

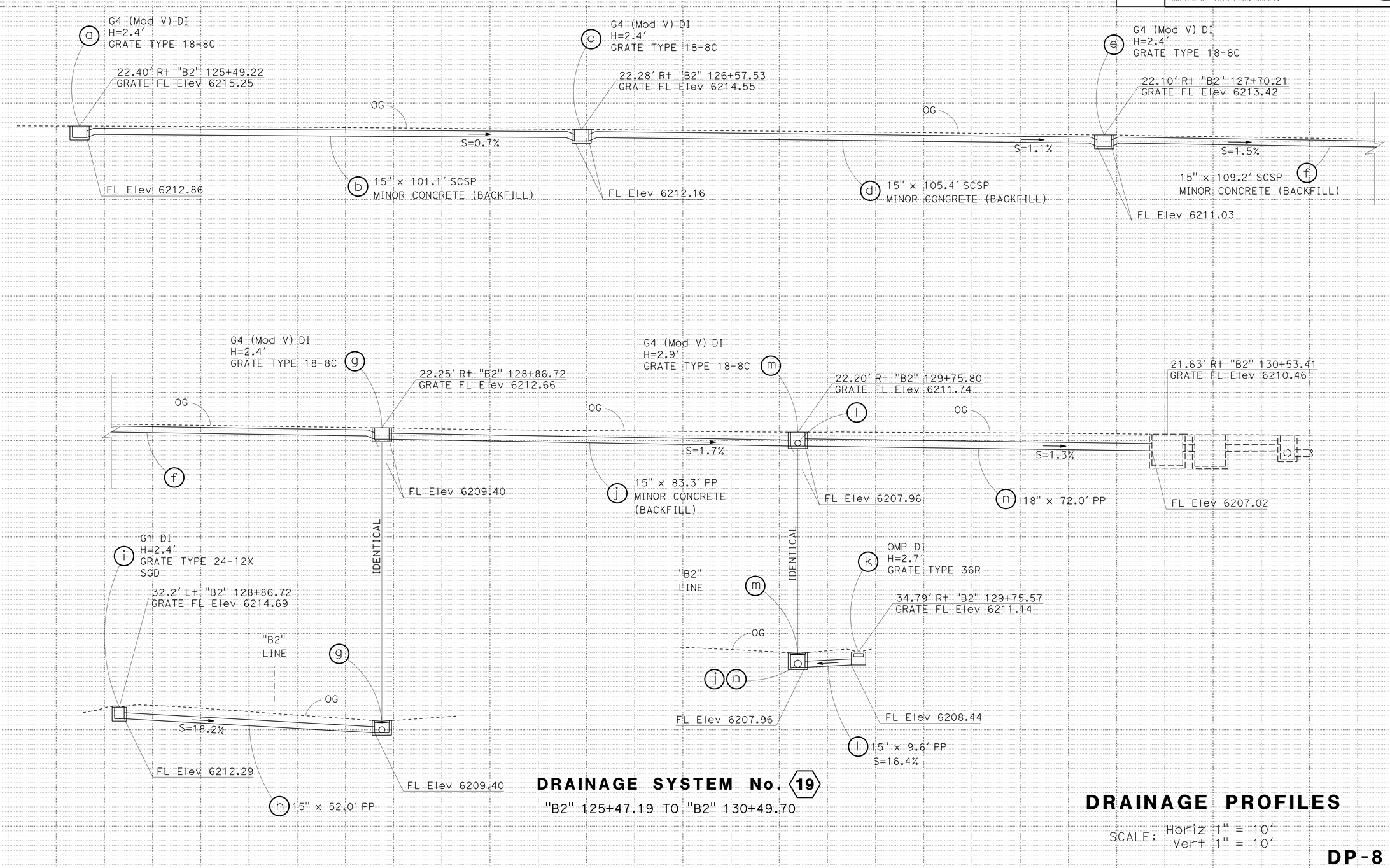

DRAINAGE SYSTEM No. 19

"B2" 125+47.19 TO "B2" 130+49.70

DRAINAGE PROFILES

SCALE: Horiz 1" = 10′
Vert 1" = 10′

DP-8

REVISED BY | DATE REVISED
CHRIS ROCKEY | MIKE DEWALL
CALCULATED-DESIGNED BY | CHECKED BY
FUNCTIONAL SUPERVISOR | DENNIS JAGODA
STATE OF CALIFORNIA - DEPARTMENT OF TRANSPORTATION
Caltrans

LAST REVISION 00-00-00 | DATE PLOTTED => 24-JAN-2013 | TIME PLOTTED => 16:56

Dist	COUNTY	ROUTE	POST MILES TOTAL PROJECT	SHEET No.	TOTAL SHEETS
03	Pla	89	T8.6/10.9	19	34

REGISTERED CIVIL ENGINEER 1-2-13 DATE

1-22-13
PLANS APPROVAL DATE

REGISTERED PROFESSIONAL ENGINEER CHRIS ROCKEY No. C78030 Exp. 9/30/13 CIVIL STATE OF CALIFORNIA

THE STATE OF CALIFORNIA OR ITS OFFICERS OR AGENTS SHALL NOT BE RESPONSIBLE FOR THE ACCURACY OR COMPLETENESS OF SCANNED COPIES OF THIS PLAN SHEET.

NOTES:

1. FOR DETAILS NOT SHOWN SEE STANDARD PLAN RSP D73, RSP D77A AND RSP D77B
2. SLOPES ARE TO MATCH EXISTING VALLEY GUTTER. CONTRACTOR TO FIELD VERIFY PRIOR TO CASTING INLETS.
3. A SGD IS INCLUDED IN THE DI GRATE & FL ELEVATIONS AS SHOWN ON THE PLANS. SEE STANDARD PLAN D78A D78B AND D78C.

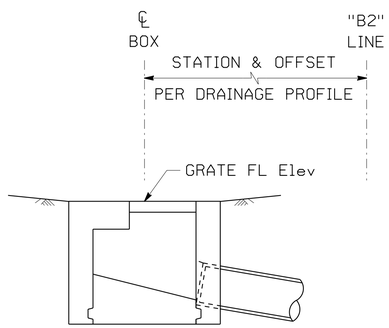

ELEVATION

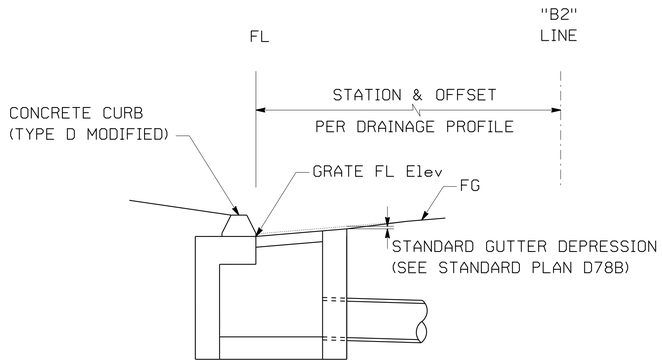

ELEVATION

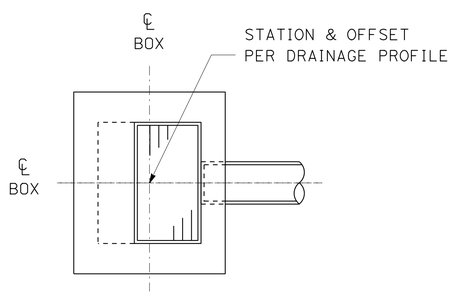

PLAN

FIELD INLET

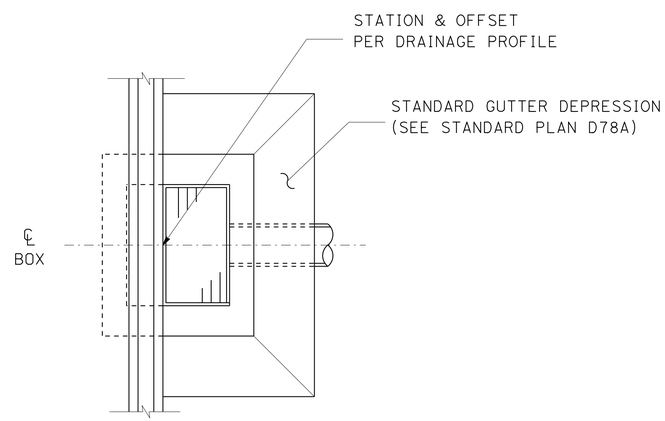

PLAN

INLET WITHIN GUTTER

STATION/OFFSET MEASUREMENT

(SEE DRAINAGE PROFILES)

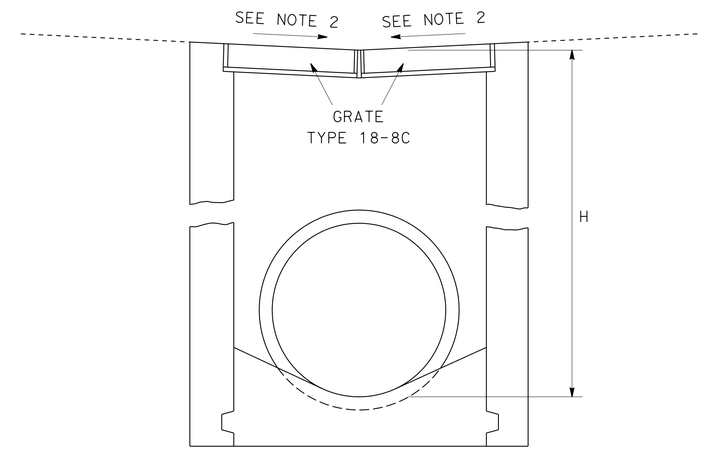

G4 (Mod V) INLET

2 e g
4 g
5 b d e
10 c
18 a
19 a c e g m

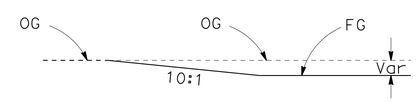

COLD PLANE CONFORM

STATIONS "B2"
33+45
34+83
40+89
43+00
63+15
63+72
81+23
84+00

DRAINAGE DETAILS

NO SCALE

DD-1

STATE OF CALIFORNIA - DEPARTMENT OF TRANSPORTATION
DIVISION OF ENGINEERING
Caltrans

FUNCTIONAL SUPERVISOR: DENNIS JAGODA
CALCULATED-DESIGNED BY: CHRIS ROCKEY
CHECKED BY: MIKE DEWALL
REVISED BY
DATE REVISED

LAST REVISION 00-00-00
DATE PLOTTED => 24-JAN-2013
TIME PLOTTED => 16:56

Dist	COUNTY	ROUTE	POST MILES TOTAL PROJECT	SHEET No.	TOTAL SHEETS
03	Pla	89	T8.6/10.9	20	34

REGISTERED CIVIL ENGINEER 1-2-13 DATE

1-22-13
PLANS APPROVAL DATE

REGISTERED PROFESSIONAL ENGINEER CHRIS ROCKEY No. C78030 Exp. 9/30/13 CIVIL STATE OF CALIFORNIA

THE STATE OF CALIFORNIA OR ITS OFFICERS OR AGENTS SHALL NOT BE RESPONSIBLE FOR THE ACCURACY OR COMPLETENESS OF SCANNED COPIES OF THIS PLAN SHEET.

NOTES:

1. PAY LIMITS OF THE TRENCH EXCAVATION TO INCLUDE ALL MATERIALS FROM THE ORIGINAL GROUND TO THE BOTTOM OF THE TRENCH.
2. TRENCH EXCAVATION TO INCLUDE THE SLURRY CEMENT BACKFILL THAT MAY HAVE BEEN USED FOR THE PIPE TRENCHES.
3. PAY LIMITS OF THE TRENCH BACKFILL DO NOT INCLUDE THE STRUCTURAL SECTION OR CONCRETE VALLEY GUTTER.
4. SAWCUT THE ENTIRE PAVED PERIMETER OF THE TRENCH PRIOR TO EXCAVATION.
5. DIMENSIONS SHOWN ARE THE MINIMUM FOR SLURRY CEMENT BACKFILL. FOR STRUCTURE BACKFILL SEE STANDARD PLAN A62F.

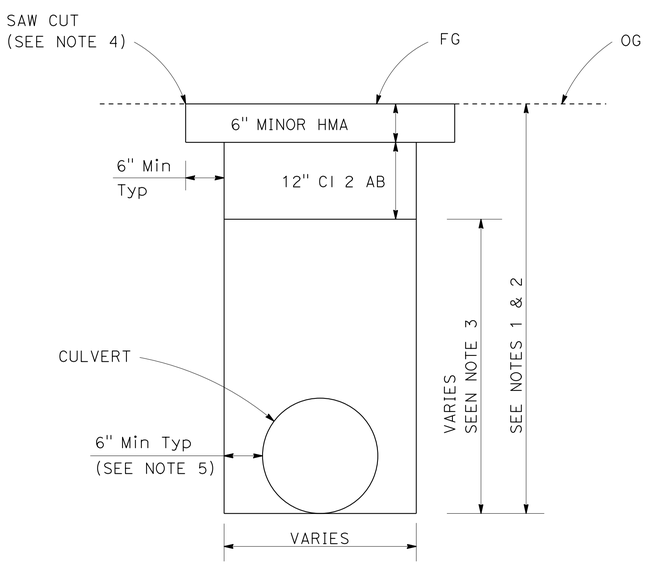

TRENCH DETAIL (WITHOUT CURB)

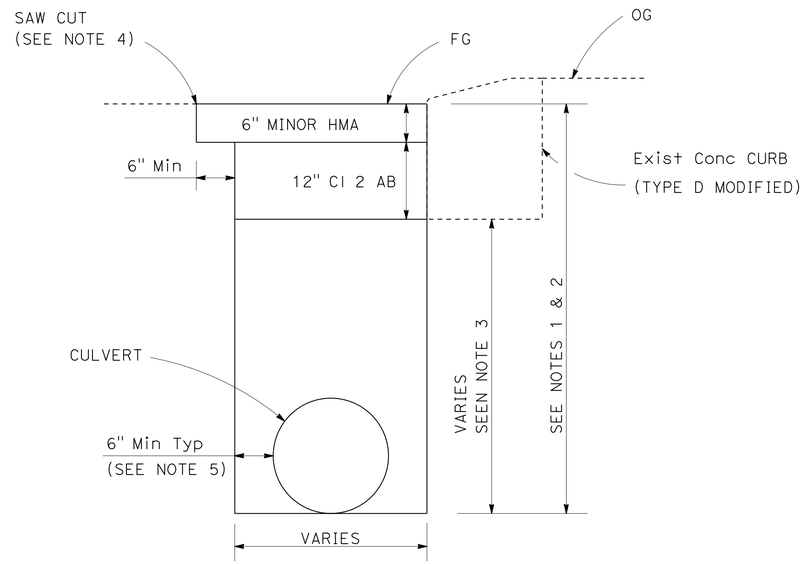

TRENCH DETAIL (WITH CURB)

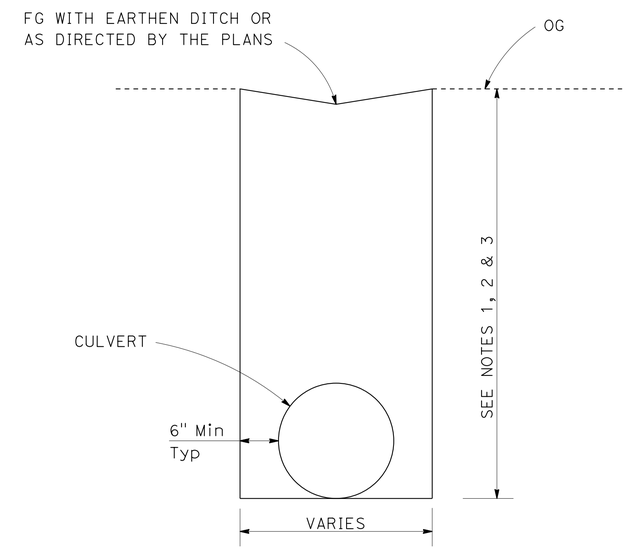

TRENCH DETAIL (EARTHEN COVER)

DRAINAGE DETAILS

NO SCALE

DD-2

STATE OF CALIFORNIA - DEPARTMENT OF TRANSPORTATION
Caltrans
DIVISION OF ENGINEERING

FUNCTIONAL SUPERVISOR: DENNIS JAGODA
CALCULATED-DESIGNED BY: CHRIS ROCKEY
CHECKED BY: MIKE DEWALL
REVISED BY
DATE REVISED

LAST REVISION 00-00-00
DATE PLOTTED => 24-JAN-2013
TIME PLOTTED => 16:56

Dist	COUNTY	ROUTE	POST MILES TOTAL PROJECT	SHEET No.	TOTAL SHEETS
03	Pla	89	T8.6/10.9	21	34

REGISTERED CIVIL ENGINEER 1-2-13 DATE

1-22-13
PLANS APPROVAL DATE

REGISTERED PROFESSIONAL ENGINEER CHRIS ROCKEY No. C78030 Exp. 9/30/13 CIVIL STATE OF CALIFORNIA

THE STATE OF CALIFORNIA OR ITS OFFICERS OR AGENTS SHALL NOT BE RESPONSIBLE FOR THE ACCURACY OR COMPLETENESS OF SCANNED COPIES OF THIS PLAN SHEET.

NOTES:

1. FOR DETAILS NOT SHOWN SEE STANDARD PLAN A87A, TYPE D CURB.
2. FOR DETAILS NOT SHOWN SEE STANDARD PLAN RSP D73, TYPE G1 INLET

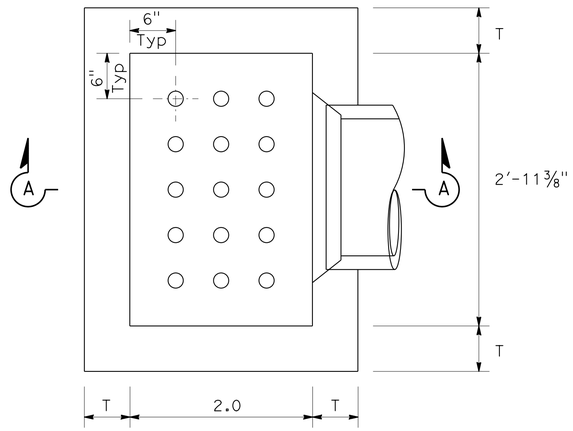

PLAN

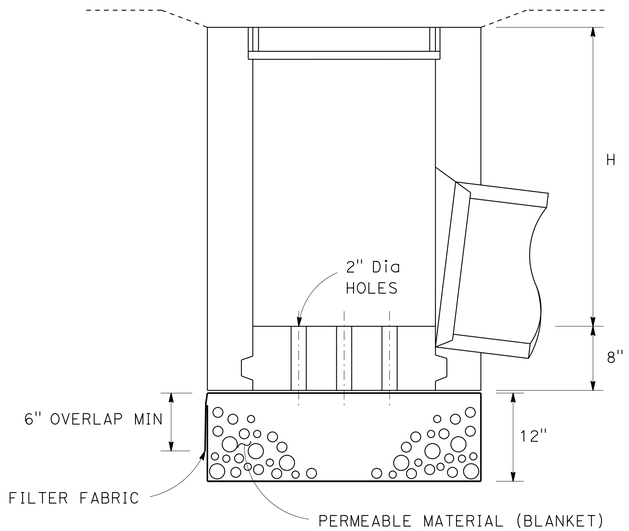

SECTION A-A

G1 (Mod H) DI

(SEE NOTE 2)

4 e

16 e

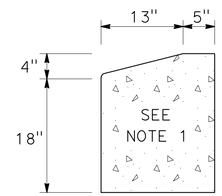

CONCRETE CURB (TYPE D MODIFIED)

4 h 39+08
8 j 52+73
9 d 56+00
9 f 56+70
10 b 58+44
16 f 82+39
17 h 118+00
18 c 124+29
19 l 129+76

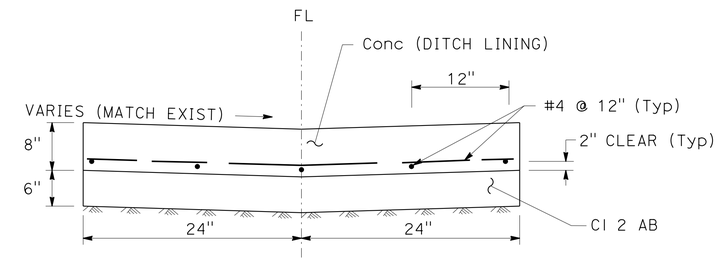

CONCRETE VALLEY GUTTER

2 f 34+86 to 35+53
3 d 37+37
4 f 40+00 to 40+50
5 b 41+60
5 d 41+16
5 e 41+00
18 b 123+65 to 124+27
19 b 125+51 to 126+58
19 d 126+58 to 127+70
19 f 127+70 to 128+87
19 j 128+87 to 129+76
19 n 129+76 to 130+50

DRAINAGE DETAILS

NO SCALE

DD-3

STATE OF CALIFORNIA - DEPARTMENT OF TRANSPORTATION
Caltrans
DIVISION OF ENGINEERING

FUNCTIONAL SUPERVISOR: DENNIS JAGODA

CALCULATED-DESIGNED BY: CHRIS ROCKEY
CHECKED BY: MIKE DEWALL

REVISED BY
DATE REVISED

LAST REVISION 00-00-00
DATE PLOTTED => 24-JAN-2013
TIME PLOTTED => 16:56

Dist	COUNTY	ROUTE	POST MILES TOTAL PROJECT	SHEET No.	TOTAL SHEETS
03	Pla	89	T8.6/10.9	22	34

REGISTERED CIVIL ENGINEER 1-2-13 DATE

1-22-13
PLANS APPROVAL DATE

REGISTERED PROFESSIONAL ENGINEER CHRIS ROCKEY No. C78030 Exp. 9/30/13 CIVIL STATE OF CALIFORNIA

THE STATE OF CALIFORNIA OR ITS OFFICERS OR AGENTS SHALL NOT BE RESPONSIBLE FOR THE ACCURACY OR COMPLETENESS OF SCANNED COPIES OF THIS PLAN SHEET.

NOTES:

1. FOR DETAILS NOT SHOWN SEE STANDARD PLAN D75A, STEEL PIPE INLETS.
2. CONNECT UPPER AND LOWER PIECES WITH EITHER A COUPLING BAND OR CONTINUOUS CIRCUMFERENCE BUTT WELD. SEE STANDARD PLAN D97A.
3. "L" TOLERANCE +/- 1."
4. THE 2' SIDE OPENING IS TO FACE UPSTREAM OR AS DIRECTED BY THE ENGINEER.
5. DRILL AND BOND #4 REBAR 4" MINIMUM INTO EXISTING INLET.
6. FOR DETAILS NOT SHOWN SEE STANDARD PLAN D72, RSP D73, D73A, D74A AND D74B DRAINAGE INLETS.
7. SLURRY CEMEMT MAY HAVE BEEN USED TO BACKFILL AROUND THE EXISTING DRAINAGE INLETS.

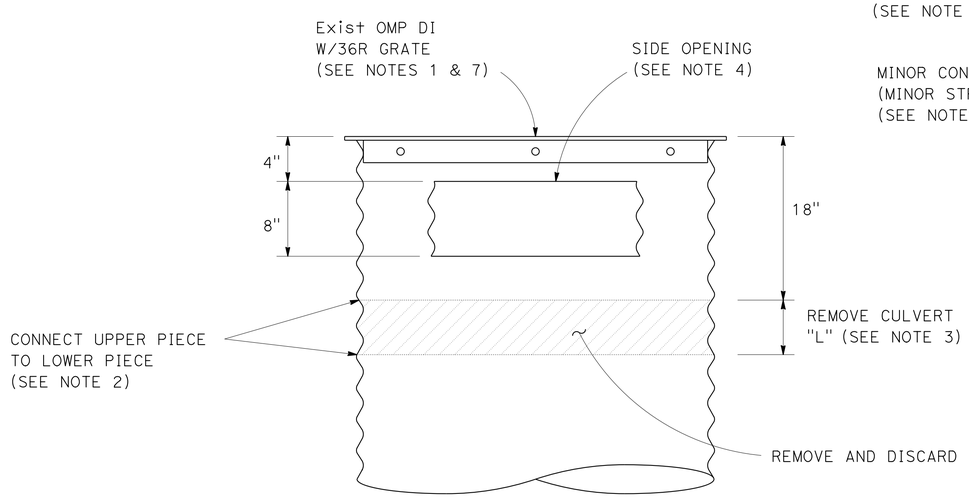

OMP DRAINAGE INLET

7 (e) L = 7"

15 (e) L = 10"

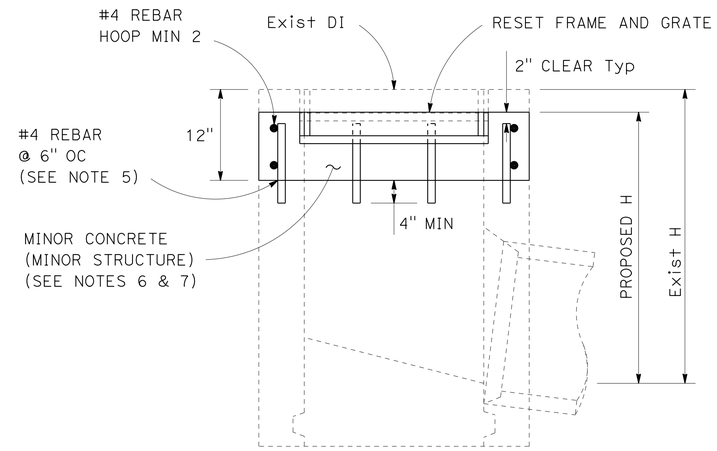

PCC DRAINAGE INLET

2 (c)

5 (g)

6 (a)

8 (k) (l)

12 (a)

13 (e) (f)

14 (c)

TOP OF GRATE ELEVATIONS

DRAINAGE		ELEVATIONS	
SYSTEM	UNIT	EXISTING	PROPOSED
		FT	FT *
2	c	6240.88	6240.66
5	g	6244.03	6243.95
6	a	6247.63	6247.53
8	k	6240.23	6240.13
8	l	6240.27	6240.17
12	a	6237.10	6236.90
13	e	6232.92	6232.82
13	f	6232.90	6232.80
14	c	6231.33	6231.23

* INCLUDES STANDARD GUTTER DEPRESSION

ADJUST INLET

DRAINAGE DETAILS

NO SCALE

DD-4

STATE OF CALIFORNIA - DEPARTMENT OF TRANSPORTATION
DIVISION OF ENGINEERING
Caltrans

FUNCTIONAL SUPERVISOR: DENNIS JAGODA
CALCULATED-DESIGNED BY: CHRIS ROCKEY
CHECKED BY: MIKE DEWALL
REVISED BY
DATE REVISED

LAST REVISION 00-00-00
DATE PLOTTED => 24-JAN-2013
TIME PLOTTED => 16:56

Dist	COUNTY	ROUTE	POST MILES TOTAL PROJECT	SHEET No.	TOTAL SHEETS
03	Pla	89	T8.6/10.9	23	34

REGISTERED CIVIL ENGINEER 1-2-13 DATE

1-22-13
PLANS APPROVAL DATE

REGISTERED PROFESSIONAL ENGINEER CHRIS ROCKEY No. C78030 Exp. 9/30/13 CIVIL STATE OF CALIFORNIA

THE STATE OF CALIFORNIA OR ITS OFFICERS OR AGENTS SHALL NOT BE RESPONSIBLE FOR THE ACCURACY OR COMPLETENESS OF SCANNED COPIES OF THIS PLAN SHEET.

NOTES:

1. SEE STANDARD PLAN D98B. 6 INCH GRATE SLOT-SECTION WITH THE TAPERED SPACER OPTION IS REQUIRED.
2. SEE STANDARD PLAN D71 FOR DI MARKERS.
3. SEE STANDARD PLAN D78A AND D78B FOR STANDARD GUTTER DEPRESSION.
4. HDPES IS HIGH DENSITY POLYETHYLENE PIPE WITH A SMOOTH INTERIOR.

DRAINAGE QUANTITIES

DRAINAGE SHEET	DRAINAGE SYSTEM No. (#)	DRAINAGE UNIT (X)	PLASTIC PIPE: 8" CSP (.079" THICK)	PLASTIC PIPE: 12" HDPES	PLASTIC PIPE: 15" HDPES	PLASTIC PIPE: 18" HDPES	PLASTIC PIPE: 24" HDPES	15" SCSP (.079" THICK) (SEE NOTE 1)	36" CSP INLET (.079" THICK)	DRAINAGE INLETS: (N) INLET TYPE	DRAINAGE INLETS: (N) FRAME GRATE TYPE	DRAINAGE INLETS: (N) HEIGHT OF INLET "H"	DRAINAGE INLETS: ADJUST INLET	DRAINAGE INLETS: MINOR CONCRETE (MINOR STRUCTURE)	DRAINAGE INLETS: MISC IRON & STEEL	DRAINAGE INLETS: DI MARKER (SEE NOTE 2)	DRAINAGE INLETS: (N) LADDER	DRAINAGE INLETS: RESET FRAME AND GRATE	(N) STANDARD GUTTER DEPRESSION	MINOR CONCRETE (GUTTER DEPRESSION) (SEE NOTE 3)	REMOVE Culv	RESET FES	(N) FILTER FABRIC	PERMEABLE MATERIAL (BLANKET)	MINOR CONCRETE (BACKFILL)	DESCRIPTION	STATION	DRAINAGE SYSTEM No. (#)	DRAINAGE UNIT (X)
			LF	LF	LF	LF	LF	LF	LF			LF	EA	CY	LB	EA	EA	EA	EA	CY	LF	EA	SQYD	CY	CY				
D-1	1	a		155.6																						12" PP		1	a
		b								G1	24-12X	2.7		0.95	239	1	1		1	0.85						G1 DI	"B2" 24+16.17		b
		c	2.7																							8" CSP			c
D-2	2	a								G1	24-12X	2.8		0.95	239	1	1		1	0.85						G1 DI	"B2" 33+82.02	2	a
		b			29.9																					15" PP			b
		c											1			1		1	1	1.17						ADJUST INLET	"B2" 34+18.42		c
		d						59.2																	5.3	15" SCSP			d
		e								G4(ModV)	18-8C	2.9		1.30	130	1	1									G4 (Mod V) DI	"B2" 34+83.93		e
		f						68.6																	6.1	15" SCSP			f
		g								G4(ModV)	18-8C	2.8		1.30	130	1	1									G4 (Mod V) DI	"B2" 35+55.42		g
D-2	3	a								G1	24-12X	2.8		0.95	239	1	1		1	0.85						G1 DI	"B2" 36+82.91	3	a
		b			22.3																					15" PP			b
		c			22.2																					15" PP			c
		d								G1	24-12X	2.8		0.95	239	1	1		1	0.85						G1 DI	"B2" 37+36.69		d
D-2-3	4	a																				1				RESET FES	"B2" 39+08.04	4	a
		b																			6.0					REMOVE Culv (PORTION)			b
		c								G1	24-12X	2.9		0.95	239	1	1		1	0.85						G1 DI	"B2" 39+08.04		c
		d						47.8																	4.3	15" SCSP			d
		e								G1(ModH)	24-12X	2.7		0.95	239	1	1		1	0.85			3.33	0.44		G1 (Mod H) DI	"B2" 39+52.48		e
		f						94.9																	8.5	15" SCSP			f
		g								G4(ModV)	18-8C	2.8		1.30	130	1	1									G4 (Mod V) DI	"B2" 40+51.63		g
		h					4.0																			24" PP			h
D-3	5	a																			3.0					REMOVE Culv (PORTION)		5	a
		b								G4(ModV)	18-8C	2.7		1.30	130	1	1									G4 (Mod V) DI	"B2" 41+60.39		b
		c																			3.0					REMOVE Culv (PORTION)			c
		d								G4(ModV)	18-8C	2.3		1.30	130	1										G4 (Mod V) DI	"B2" 41+16.42		d
		e								G4(ModV)	18-8C	2.3		1.30	130	1										G4 (Mod V) DI	"B2" 40+99.70		e
		f			6.5																				0.6	15" PP			f
		g											1			1		1	1	0.85						ADJUST INLET	"B2" 40+92.09		g
SHEET TOTAL			2.7	155.6	80.9		4.0	270.5					2	13.50	2214	14		2		7.12	12.0	1		0.44	24.8				

(N) NOT A SEPARATE PAY ITEM, FOR INFORMATION ONLY.

STATE OF CALIFORNIA - DEPARTMENT OF TRANSPORTATION
DIVISION OF ENGINEERING
Caltrans

FUNCTIONAL SUPERVISOR: DENNIS JAGODA
CALCULATED-DESIGNED BY: CHRIS ROCKEY
CHECKED BY: MIKE DEWALL
REVISED BY
DATE REVISED

LAST REVISION 00-00-00
DATE PLOTTED => 24-JAN-2013
TIME PLOTTED => 16:56

DRAINAGE QUANTITIES

DQ-1

Dist	COUNTY	ROUTE	POST MILES TOTAL PROJECT	SHEET No.	TOTAL SHEETS
03	Pla	89	T8.6/10.9	24	34

REGISTERED CIVIL ENGINEER 1-2-13 DATE

1-22-13
PLANS APPROVAL DATE

REGISTERED PROFESSIONAL ENGINEER CHRIS ROCKEY No. C78030 Exp. 9/30/13 CIVIL STATE OF CALIFORNIA

THE STATE OF CALIFORNIA OR ITS OFFICERS OR AGENTS SHALL NOT BE RESPONSIBLE FOR THE ACCURACY OR COMPLETENESS OF SCANNED COPIES OF THIS PLAN SHEET.

DRAINAGE QUANTITIES

DRAINAGE SHEET	DRAINAGE SYSTEM No. (#)	DRAINAGE UNIT (X)	PLASTIC PIPE: 8" CSP (.079" THICK)	PLASTIC PIPE: 12" PP	PLASTIC PIPE: 15" PP	PLASTIC PIPE: 18" PP	PLASTIC PIPE: 24" PP	15" SCSP (.079" THICK) (SEE NOTE 1)	36" CSP INLET (.079" THICK)	DRAINAGE INLETS: (N) INLET TYPE	DRAINAGE INLETS: (N) FRAME GRATE TYPE	DRAINAGE INLETS: (N) HEIGHT OF INLET "H"	DRAINAGE INLETS: ADJUST INLET	DRAINAGE INLETS: MINOR CONCRETE (MINOR STRUCTURE)	DRAINAGE INLETS: MISC IRON & STEEL	DRAINAGE INLETS: DI MARKER (SEE NOTE 2)	DRAINAGE INLETS: (N) LADDER	DRAINAGE INLETS: RESET FRAME AND GRATE	(N) STANDARD GUTTER DEPRESSION	MINOR CONCRETE (GUTTER DEPRESSION) (SEE NOTE 3)	REMOVE Culv	RESET FES	(N) FILTER FABRIC	PERMEABLE MATERIAL (BLANKET)	MINOR CONCRETE (BACKFILL)	DESCRIPTION	STATION	DRAINAGE SYSTEM No. (#)	DRAINAGE UNIT (X)
			LF	LF	LF	LF	LF	LF	LF			LF	EA	CY	LB	EA	EA	EA	EA	CY	LF	EA	SQYD	CY	CY				
D-3	6	a											1			1		1	1	0.85						ADJUST INLET	"B2" 44+90.91	6	a
D-3	7	a								GCP	36RX	3.2		1.10	215											GCP DI	"B2" 48+01.65	7	a
		b			102.7																					15" PP			b
		c	OMITTED																									OMITTED	c
		d	OMITTED																									OMITTED	d
		e											1													ADJUST INLET	"B2" 49+07.14		e
D-3	8	a								G1	24-12X	3.0		0.95	239	1	1		1	0.85						G1 DI	"B2" 51+00.00	8	a
		b				27.5																				18" PP			b
		c								G1	24-12X	3.3		1.02	239	1	1		1	0.85						G1 DI	"B2" 51+00.00		c
		d			97.0																					15" PP			d
		e								G1	24-12X	2.9		0.95	239	1	1		1	0.85						G1 DI	"B2" 52+00.00		e
		f				27.3																				18" PP			f
		g								G1	24-12X	3.1		0.97	239	1	1		1	0.85						G1 DI	"B2" 52+00.00		g
		h			70.4																					15" PP			h
		i								GCP	36RX	3.3		1.10	215		1									GCP DI	"B2" 52+73.44		i
		j			2.0																					15" PP			j
		k											1					1	1	0.85						ADJUST INLET	"B2" 52+73.44		k
		l											1					1	1	0.85						ADJUST INLET	"B2" 52+73.44		l
D-4	9	a								G1	24-12X	2.9		0.95	239	1	1		1	0.85						G1 DI	"B2" 54+50.95	9	a
		b			127.6																					15" PP			b
		c								G1	24-12X	3.0		0.95	239	1	1		1	0.85						G1 DI	"B2" 55+82.12		c
		d			31.1																					15" PP			d
		e							3.4	GMP	36RX	2.6		0.47	215		1									GMP DI	"B2" 56+15.87		e
		f			86.4																					15" PP			f
D-4	10	a							3.0	GMP	36RX	2.5		0.47	215		1									GMP DI	"B2" 57+98.81	10	a
		b			57.5																					15" PP			b
		c								G4(ModV)	18-8C	2.9		1.30	130	1	1									G4 (Mod V) DI	"B2" 55+82.12		c
		d			30.2																					15" PP			d
D-4	11	a								G1	24-12X	2.7		0.95	239	1	1		1	0.85						G1 DI	"B2" 60+50.68	11	a
		b			46.7																					15" PP			b
		c								G1	24-12X	2.8		0.95	239	1	1		1	0.85						G1 DI	"B2" 61+00.37		c
		d			35.7																					15" PP			d
SHEET TOTAL					687.3	54.8			6.4				4	12.13	2902	10		3		9.35									

(N) NOT A SEPARATE PAY ITEM, FOR INFORMATION ONLY.

DRAINAGE QUANTITIES

DQ-2

REVISED BY | DATE REVISED
CHRIS ROCKEY | MIKE DEWALL
CALCULATED-DESIGNED BY | CHECKED BY
FUNCTIONAL SUPERVISOR: DENNIS JAGODA

STATE OF CALIFORNIA - DEPARTMENT OF TRANSPORTATION
Caltrans
DIVISION OF ENGINEERING

LAST REVISION 00-00-00 | DATE PLOTTED => 24-JAN-2013 | TIME PLOTTED => 16:56

Dist	COUNTY	ROUTE	POST MILES TOTAL PROJECT	SHEET No.	TOTAL SHEETS
03	Pla	89	T8.6/10.9	25	34

REGISTERED CIVIL ENGINEER 1-2-13 DATE

1-22-13
PLANS APPROVAL DATE

REGISTERED PROFESSIONAL ENGINEER CHRIS ROCKEY No. C78030 Exp. 9/30/13 CIVIL STATE OF CALIFORNIA

THE STATE OF CALIFORNIA OR ITS OFFICERS OR AGENTS SHALL NOT BE RESPONSIBLE FOR THE ACCURACY OR COMPLETENESS OF SCANNED COPIES OF THIS PLAN SHEET.

DRAINAGE QUANTITIES

DRAINAGE SHEET	DRAINAGE SYSTEM No. (#)	DRAINAGE UNIT (X)	PLASTIC PIPE: 8" CSP (.079" THICK)	PLASTIC PIPE: 12" HDPES	PLASTIC PIPE: 15" HDPES	PLASTIC PIPE: 18" HDPES	PLASTIC PIPE: 24" HDPES	15" SCSP (.079" THICK) (SEE NOTE 1)	36" CSP INLET (.079" THICK)	DRAINAGE INLETS: (N) INLET TYPE	DRAINAGE INLETS: (N) FRAME GRATE TYPE	DRAINAGE INLETS: (N) HEIGHT OF INLET "H"	DRAINAGE INLETS: ADJUST INLET	DRAINAGE INLETS: MINOR CONCRETE (MINOR STRUCTURE)	DRAINAGE INLETS: MISC IRON & STEEL	DRAINAGE INLETS: DI MARKER (SEE NOTE 2)	DRAINAGE INLETS: (N) LADDER	DRAINAGE INLETS: RESET FRAME AND GRATE	(N) STANDARD GUTTER DEPRESSION	MINOR CONCRETE (GUTTER DEPRESSION) (SEE NOTE 3)	REMOVE Culv	RESET FES	(N) FILTER FABRIC	PERMEABLE MATERIAL (BLANKET)	MINOR CONCRETE (BACKFILL)	DESCRIPTION	STATION	DRAINAGE SYSTEM No. (#)	DRAINAGE UNIT (X)
			LF	LF	LF	LF	LF	LF	LF			LF	EA	CY	LB	EA	EA	EA	EA	CY	LF	EA	SQYD	CY	CY				
D-4	12	a											1					1	1	0.85						ADJUST INLET	"B2" 63+67.93	12	a
D-5	13	a								G1	24-12X	2.7		0.95	239	1	1		1	0.85						G1 DI	"B2" 67+00.00	13	a
		b			128.9																					15" PP			b
		c								G1	24-12X	2.8		0.95	239	1	1		1	0.85						G1 DI	"B2" 68+31.13		c
		d			79.6																					15" PP			d
		e											1					1	1	0.85						ADJUST INLET	"B2" 69+13.32		e
		f											1					1	1	0.85						ADJUST INLET	"B2" 69+25.78		f
D-5	14	a								G1	24-12X	2.4		0.95	239	1	1		1	0.85						G1 DI	"B2" 71+66.52	14	a
		b			28.4																				2.5	15" PP			b
		c											1					1	1	0.85						ADJUST INLET	"B2" 71+66.52		c
D-5	15	a								G1	24-12X	2.8		0.95	239	1	1		1	0.85						G1 DI	"B2" 73+50.51	15	a
		b			127.2																					15" PP			b
		c								G1	24-12X	2.9		0.95	239	1	1		1	0.85						G1 DI	"B2" 74+82.05		c
		d			106.6																					15" PP			d
		e											1													ADJUST INLET	"B2" 76+09.55		e
D-6	16	a								G1	24-12X	2.7		0.95	239	1	1		1	0.85						G1 DI	"B2" 81+00.02	16	a
		b			72.2																					15" PP			b
		c								G1	24-12X	2.9		0.95	239	1	1		1	0.85						G1 DI	"B2" 81+75.21		c
		d			59.5																					15" PP			d
		e								G1(ModH)	24-12X	2.8		0.95	239	1	1		1	0.85			3.33	0.44		G1 (Mod H) DI	"B2" 82+37.25		e
		f			6.1																					15" PP			f
D-7,8	17	a								G1	24-12X	2.8		0.95	239	1	1		1	0.85						G1 DI	"B2" 121+00.04	17	a
		b			95.8																					15" PP			b
		c								G1	24-12X	2.8		0.95	239	1	1		1	0.85						G1 DI	"B2" 119+99.60		c
		d			95.5																					15" PP			d
		e								G1	24-12X	2.9		0.95	239	1	1		1	0.85						G1 DI	"B2" 119+00.65		e
		f			96.6																					15" PP			f
		g								G1	24-12X	3.0		0.95	239	1	1		1	0.85						G1 DI	"B2" 117+99.60		g
		h				46.5																				18" PP			h
SHEET TOTAL					896.4	46.5							5	11.40	2868	12		4		13.60				0.44	2.5				

(N) NOT A SEPARATE PAY ITEM, FOR INFORMATION ONLY.

STATE OF CALIFORNIA - DEPARTMENT OF TRANSPORTATION
DIVISION OF ENGINEERING
Caltrans

FUNCTIONAL SUPERVISOR: DENNIS JAGODA
CALCULATED-DESIGNED BY: CHRIS ROCKEY
CHECKED BY: MIKE DEWALL
REVISED BY
DATE REVISED

DRAINAGE QUANTITIES

DQ-3

LAST REVISION 00-00-00
DATE PLOTTED => 24-JAN-2013
TIME PLOTTED => 16:56

Dist	COUNTY	ROUTE	POST MILES TOTAL PROJECT	SHEET No.	TOTAL SHEETS
03	Pla	89	T8.6/10.9	26	34

REGISTERED CIVIL ENGINEER 1-2-13 DATE

1-22-13
PLANS APPROVAL DATE

REGISTERED PROFESSIONAL ENGINEER CHRIS ROCKEY No. C78030 Exp. 9/30/13 CIVIL STATE OF CALIFORNIA

THE STATE OF CALIFORNIA OR ITS OFFICERS OR AGENTS SHALL NOT BE RESPONSIBLE FOR THE ACCURACY OR COMPLETENESS OF SCANNED COPIES OF THIS PLAN SHEET.

DRAINAGE QUANTITIES

DRAINAGE SHEET	DRAINAGE SYSTEM No. (#)	DRAINAGE UNIT (X)	PLASTIC PIPE: 8" CSP (.079" THICK)	PLASTIC PIPE: 12" HDPES	PLASTIC PIPE: 15" HDPES	PLASTIC PIPE: 18" HDPES	PLASTIC PIPE: 24" HDPES	15" SCSP (.079" THICK) (SEE NOTE 1)	36" CSP INLET (.079" THICK)	DRAINAGE INLETS: (N) INLET TYPE	(N) FRAME GRATE TYPE	(N) HEIGHT OF INLET "H"	ADJUST INLET	MINOR CONCRETE (MINOR STRUCTURE)	MISC IRON & STEEL	DI MARKER (SEE NOTE 2)	(N) LADDER	RESET FRAME AND GRATE	(N) STANDARD GUTTER DEPRESSION	MINOR CONCRETE (GUTTER DEPRESSION) (SEE NOTE 3)	REMOVE Culv	RESET FES	(N) FILTER FABRIC	PERMEABLE MATERIAL (BLANKET)	MINOR CONCRETE (BACKFILL)	DESCRIPTION	STATION	DRAINAGE SYSTEM No. (#)	DRAINAGE UNIT (X)
			LF	LF	LF	LF	LF	LF	LF			LF	EA	CY	LB	EA	EA	EA	EA	CY	LF	EA	SQYD	CY	CY				
D-8	18	a								G4(ModV)	18-8C	2.5		1.30	239	1	1									G4 (Mod V) DI	"B2" 123+63.00	18	a
		b			62.2																				5.5	15" PP			b
		c			3.0																					15" PP			c
		d							3.2	GMP	36RX	2.7		0.47	215	1	1									GMP DI	"B2" 124+29.48		d
D-8	19	a								G4(ModV)	18-8C	2.4		1.30	239	1	1									G4 (Mod V) DI	"B2" 125+49.22	19	a
		b						101.1																	9.0	15" SCSP			b
		c								G4(ModV)	18-8C	2.4		1.30	239	1	1									G4 (Mod V) DI	"B2" 126+57.53		c
		d						105.4																	9.4	15" SCSP			d
		e								G4(ModV)	18-8C	2.4		1.30	239	1	1									G4 (Mod V) DI	"B2" 127+70.21		e
		f						109.2																	9.7	15" SCSP			f
		g								G4(ModV)	18-8C	2.4		1.30	239	1	1									G4 (Mod V) DI	"B2" 128+86.72		g
		h			52.0																					15" PP			h
		i								G1	24-12X	2.4		0.95	239	1	1		1	0.85						G1 DI	"B2" 128+86.72		i
		j			83.3																				7.4	15" PP			j
		k							2.7	OMP	36R	2.7		0.47	215											OMP DI	"B2" 129+75.57		k
		l			9.6																					15" PP			l
		m								G4(ModV)	18-8C	2.9		1.30	239	1	1									G4 (Mod V) DI	"B2" 129+75.80		m
		n				72.0																				18" PP			n
SHEET TOTAL					210.1	72.0		315.7	5.9					9.69	2103	8				0.85					41.0				

SHEET DQ-1	2.7	155.6	80.9		4.0	270.5					2	13.50	2214	14		2		7.12	12.0	1		0.44	24.8
SHEET DQ-2			687.3	54.8			6.4				4	12.13	2902	10		3		9.35					
SHEET DQ-3			896.4	46.5							5	11.40	2868	12		4		13.60				0.44	2.5
SHEET DQ-4			210.1	72.0		315.7	5.9					9.69	2103	8				0.85					41.0
TOTAL	2.7	155.6	1874.7	173.3	4.0	586.2	12.3				11	46.72	10087	44		9		30.92	12.0	1		0.88	68.3

(N) NOT A SEPARATE PAY ITEM, FOR INFORMATION ONLY.

REVISED BY | DATE REVISED
CHRIS ROCKEY | MIKE DEWALL
CALCULATED-DESIGNED BY | CHECKED BY
FUNCTIONAL SUPERVISOR | DENNIS JAGODA
STATE OF CALIFORNIA - DEPARTMENT OF TRANSPORTATION
Caltrans
DIVISION OF ENGINEERING

DRAINAGE QUANTITIES

DQ-4

LAST REVISION 00-00-00 | DATE PLOTTED => 24-JAN-2013 | TIME PLOTTED => 16:56

Dist	COUNTY	ROUTE	POST MILES TOTAL PROJECT	SHEET No.	TOTAL SHEETS
03	Pla	89	T8.6/10.9	27	34

REGISTERED CIVIL ENGINEER 1-2-13 DATE

1-22-13
PLANS APPROVAL DATE

REGISTERED PROFESSIONAL ENGINEER
CHRIS ROCKEY
No. C78030
Exp. 9/30/13
CIVIL
STATE OF CALIFORNIA

THE STATE OF CALIFORNIA OR ITS OFFICERS OR AGENTS SHALL NOT BE RESPONSIBLE FOR THE ACCURACY OR COMPLETENESS OF SCANNED COPIES OF THIS PLAN SHEET.

NOTES:

1. FOR ACCURATE RIGHT OF WAY DATA, CONTACT RIGHT OF WAY ENGINEERING AT THE DISTRICT OFFICE.

LEGEND:

(X) CONSTRUCTION AREA SIGN LETTER

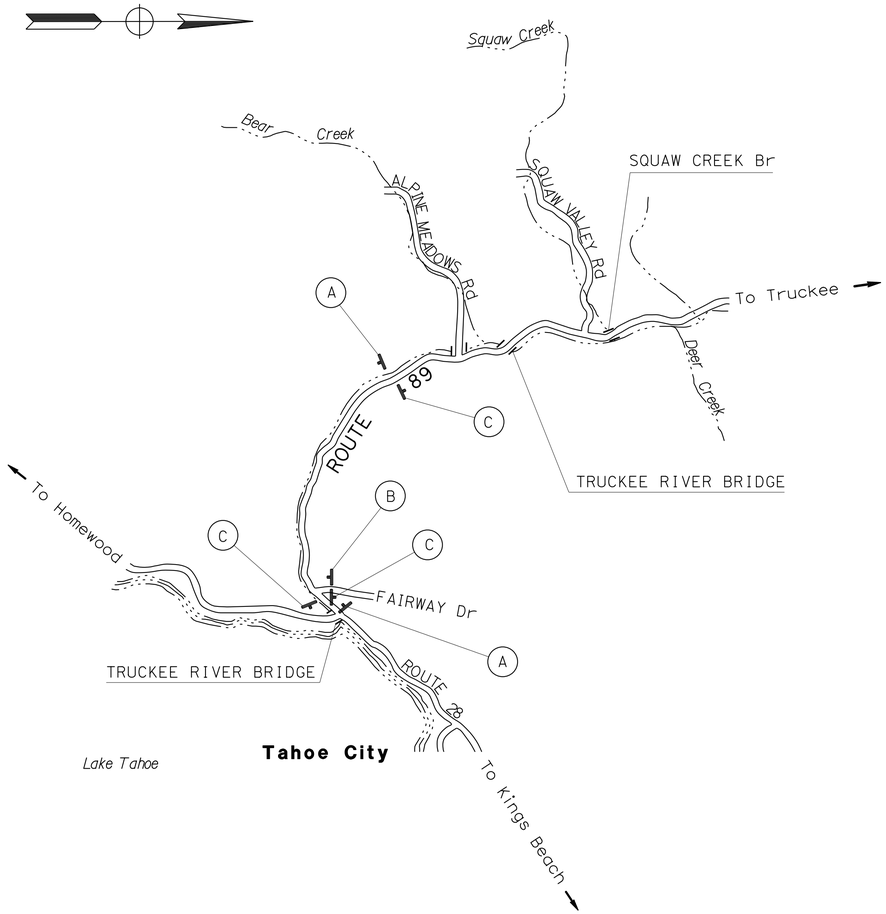

STATIONARY MOUNTED CONSTRUCTION AREA SIGNS

SIGN LETTER	SIGN CODE (FEDERAL)	PANEL SIZE	SIGN MESSAGE	NUMBER OF POST AND SIZE	NUMBER OF SIGNS
(A)	W20-1	48" x 48"	ROAD WORK AHEAD	1 - 6" x 6"	2
(B)	W20-1	36" x 36"	ROAD WORK AHEAD	1 - 4" x 6"	1
(C)	G20-2	36" x 18"	END ROAD WORK	1 - 4" x 4"	3

NOTE: EXACT SIGN LOCATION TO BE DETERMINED BY THE ENGINEER.

APPROVED FOR CONSTRUCTION AREA SIGN WORK ONLY

CONSTRUCTION AREA SIGNS

NO SCALE

CS-1

STATE OF CALIFORNIA - DEPARTMENT OF TRANSPORTATION
Caltrans
DIVISION OF ENGINEERING

FUNCTIONAL SUPERVISOR: DENNIS JAGODA
CALCULATED-DESIGNED BY: CHRIS ROCKEY
CHECKED BY: MIKE DEWALL
REVISED BY
DATE REVISED

LAST REVISION 00-00-00
DATE PLOTTED => 24-JAN-2013
TIME PLOTTED => 16:56

Dist	COUNTY	ROUTE	POST MILES TOTAL PROJECT	SHEET No.	TOTAL SHEETS
03	Pla	89	T8.6/10.9	28	34

REGISTERED CIVIL ENGINEER 1-2-13 DATE

1-22-13
PLANS APPROVAL DATE

REGISTERED PROFESSIONAL ENGINEER CHRIS ROCKEY No. C78030 Exp. 9/30/13 CIVIL STATE OF CALIFORNIA

THE STATE OF CALIFORNIA OR ITS OFFICERS OR AGENTS SHALL NOT BE RESPONSIBLE FOR THE ACCURACY OR COMPLETENESS OF SCANNED COPIES OF THIS PLAN SHEET.

DITCH EARTHWORK

STATION		LOCATION	DITCH EXCAVATION	(N) CUT	(N) FILL
BEGIN	END	RT/LT	CY	CY	CY
"B2" 53+00	"B2" 56+22	RT	3.7	3.7	2.1
"B2" 61+20	"B2" 63+68	RT	21.8	21.8	1.6
"B2" 81+23	"B2" 82+45	RT	25.0	25.0	2.2
"B2" 129+72	"B2" 130+17	RT	1.0	1.0	1.5
		TOTAL	51.5		

COLD PLANE ASPHALT CONCRETE PAVEMENT

STATION		LOCATION	COLD PLANE AC PAVEMENT
BEGIN	END	RT/LT	SQYD
"B2" 33+45	"B2" 34+83	RT	135
"B2" 40+89	"B2" 43+00	LT	108
"B2" 63+15	"B2" 63+72	LT	22
"B2" 81+23	"B2" 84+00	RT	268
		TOTAL	533

ROCK STAIN QUANTITY

STATION		LOCATION	ROCK STAIN
BEGIN	END	RT/LT	SQFT
"B2" 43+86	"B2" 44+47	RT	880
		TOTAL	880

4" TWO-COMPONENT PAINT TRAFFIC STRIPE

STATION		LOCATION	DETAIL 27B	DETAIL 28	DETAIL 31
BEGIN	END	RT/LT/CTR	LF	LF	LF
"B2" 33+45	"B2" 34+83	RT	138		
"B2" 40+89	"B2" 43+00	LT	211		
"B2" 51+00	"B2" 51+00	LT	6		
"B2" 51+00	"B2" 51+00	CTR		12	
"B2" 51+00	"B2" 52+73	RT	173		
"B2" 52+00	"B2" 52+00	LT	6		
"B2" 52+00	"B2" 52+00	CTR		12	
"B2" 63+15	"B2" 63+72	LT	57		
"B2" 71+66	"B2" 71+66	LT	6		
"B2" 71+66	"B2" 71+66	CTR		12	
"B2" 71+66	"B2" 71+66	RT	6		
"B2" 81+23	"B2" 84+00	RT	277		
"B2" 118+00	"B2" 118+00	LT	6		
"B2" 118+00	"B2" 118+00	CTR		12	
"B2" 118+00	"B2" 118+00	RT	6		
"B2" 128+87	"B2" 128+87	LT	6		
"B2" 128+87	"B2" 128+87	CTR			24
"B2" 128+87	"B2" 128+87	RT	6		
		SUB-TOTAL	904	48	24
		TOTAL	976		

CONCRETE VALLEY GUTTER

DRAINAGE SYSTEM	DRAINAGE ITEM	CONCRETE (DITCH LINING)	CLASS 2 AB	BAR REINFORCING STEEL (EPOXY COATED)	(N) REMOVE BASE & SURFACE
		CY	CY	LB	LF
2	f	7.5	5.6	718	76
3	d	0.5	0.4	51	5
4	f	4.9	3.7	474	50
5	b	0.5	0.4	51	5
5	d	0.5	0.4	51	5
5	e	0.5	0.4	51	5
18	b	6.9	5.2	661	70
19	b	10.9	8.1	1037	110
19	d	11.4	8.5	1084	115
19	f	11.2	8.4	1065	113
19	j	8.9	6.7	849	90
19	n	7.1	5.3	680	72
	TOTAL	70.8	53.1 *	6772	

HOT MIX ASPHALT (TRENCH)

DRAINAGE SYSTEM	DRAINAGE ITEM	(N) REMOVE BASE & SURFACE	MINOR HOT MIX ASPHALT	CLASS 2 AB
		SQFT	TON	CY
1	a	624	20.8	17.3
2	b	128	4.3	3.6
3	b	98	3.3	2.8
3	c	98	3.3	2.8
5	f	30	1.0	0.8
7	b	438	14.6	12.4
8	b	115	3.8	3.3
8	d	412	13.7	11.7
8	f	115	3.8	3.3
8	h	302	10.1	8.5
9	b	544	18.1	15.4
9	d	51	1.7	1.4
9	f	136	4.5	3.9
10	b	247	8.2	7.0
10	d	132	4.4	3.7
11	b	200	6.7	5.7
11	d	153	5.1	4.3
13	d	544	18.1	15.4
13	b	336	11.2	9.5
14	b	544	18.1	15.4
15	b	544	18.1	15.4
15	d	455	15.2	12.9
16	b	310	10.3	8.8
16	d	255	8.5	7.2
17	b	408	13.6	11.6
17	d	404	13.5	11.4
17	f	412	13.7	11.7
17	h	207	6.9	6.0
19	h	213	7.1	6.0
		TOTAL	281.7	239.2
		FROM CONCRETE VALLEY GUTTER		53.1
			TOTAL	292.3

RETAINING WALL GUTTER

STATION		LOCATION	REMOVE CONCRETE (CHANNEL)	MINOR CONCRETE (GUTTER)
BEGIN	END	RT/LT	CY	CY
"B2" 46+86	"B2" 44+90	LT	3.5	3.5
		TOTAL	3.5	3.5

CONCRETE CURB

DRAINAGE SYSTEM	DRAINAGE ITEM	MINOR CONCRETE (CURB)	(N) REMOVE CONCRETE CURB
		CY	LF
4	h	0.6	6
8	j	0.6	6
9	d	1.9	20
9	f	3.4	35
10	b	2.9	30
16	f	0.7	7
17	h	0.6	6
18	c	0.6	6
19	l	0.6	6
	TOTAL	11.9	

GRADE TO DRAIN EARTHWORK

STATION		LOCATION	ROADWAY EXCAVATION	(N) CUT	(N) FILL
BEGIN	END	RT/LT	CY	CY	CY
"B2" 124+26	"B2" 124+68	RT	14.2	14.2	14.2
		TOTAL	14.2		

ESA FENCE

STATION		Temp FENCE (TYPE ESA)
BEGIN	END	LF
"B2" 61+38	"B2" 61+58	77
"B2" 70+27	"B2" 70+57	95
"B2" 122+17	"B2" 122+37	67
	TOTAL	239

FIBER ROLLS

STATION **		FIBER ROLLS
BEGIN	END	LF
"B2" 20+00	"B2" 133+00	250
	TOTAL	250

* FOR TOTAL QUANTITY SEE HOT MIX ASPHALT TRENCH.
** LOCATION AS DIRECTED BY THE ENGINEER.
(N) NOT A SEPARATE PAY ITEM, FOR INFORMATION ONLY.

SUMMARY OF QUANTITIES

Q-1

REVISED BY | DATE REVISED
CHRIS ROCKEY | MIKE DEWALL
CALCULATED-DESIGNED BY | CHECKED BY
FUNCTIONAL SUPERVISOR
DENNIS JAGODA

STATE OF CALIFORNIA - DEPARTMENT OF TRANSPORTATION
Caltrans
DIVISION OF ENGINEERING

LAST REVISION 00-00-00 | DATE PLOTTED => 24-JAN-2013 | TIME PLOTTED => 16:56

Dist	COUNTY	ROUTE	POST MILES TOTAL PROJECT	SHEET No.	TOTAL SHEETS
03	Pla	89	T8.6/10.9	29	34

LICENSED LANDSCAPE ARCHITECT

1-22-13
PLANS APPROVAL DATE

LICENSED LANDSCAPE ARCHITECT
JAMES G. WILLIAMSON
No. 5415
Signature
02-28-14
Renewal Date
01-03-13
Date
STATE OF CALIFORNIA

THE STATE OF CALIFORNIA OR ITS OFFICERS OR AGENTS SHALL NOT BE RESPONSIBLE FOR THE ACCURACY OR COMPLETENESS OF SCANNED COPIES OF THIS PLAN SHEET.

EROSION CONTROL (TYPE 1)

SEQUENCE	BID ITEM	MATERIAL		APPLICATION RATE
		DESCRIPTION	TYPE	
STEP 1	HYDROSEED	SEED		60 LB/ACRE
		FIBER	WOOD	600 LB/ACRE
		FERTILIZER	ORGANIC	600 LB/ACRE
STEP 2	HYDROMULCH	FIBER	WOOD	600 LB/ACRE
		FERTILIZER	ORGANIC	600 LB/ACRE
		TACKIFIER	PSYLLIUM	150 LB/ACRE

EROSION CONTROL (TYPE 2)

SEQUENCE	BID ITEM	MATERIAL		APPLICATION RATE
		DESCRIPTION	TYPE	
STEP 1	HYDROSEED	SEED		60 LB/ACRE
		FIBER	WOOD	600 LB/ACRE
		FERTILIZER	ORGANIC	600 LB/ACRE
STEP 2	STRAW	STRAW	PINE NEEDLES	2 INCH DEPTH
STEP 3	HYDROMULCH	FIBER	WOOD	600 LB/ACRE
		FERTILIZER	ORGANIC	600 LB/ACRE
		TACKIFIER	PSYLLIUM	150 LB/ACRE

SEED MIX

BOTANICAL NAME (COMMON NAME)	PERCENT GERMINATION (MINIMUM)	POUNDS PURE LIVE SEED PER ACRE (SLOPE MEASUREMENT)
LOTUS PURSHIANUS[1] (PERSHINGS LOTUS)	60	10
ACHANTHERUM OCCIDENTALIS[1] (CALIFORNIA NEEDLEGRASS)	60	10
BROMUS CARINATUS[1] (CALIFORNIA BROME)	70	15
ELYMUS ELYMOIDES[1] (SQUIRRELTAIL)	60	15
PURSHIA TRIDENTADA[1] (BITTERBRUSH)	65	10
	TOTAL	60

[1] SEED PRODUCED IN NORTHERN SIERRA NEVADA RANGE ABOVE THE 2500 FOOT ELEVATION LEVEL.

EROSION CONTROL LEGEND

ECL-1

REVISED BY | DATE REVISED
J WILLIAMSON | T C JOHNSON
CALCULATED-DESIGNED BY | CHECKED BY
SENIOR LANDSCAPE ARCHITECT
T CHRIS JOHNSON

STATE OF CALIFORNIA - DEPARTMENT OF TRANSPORTATION
Caltrans® LANDSCAPE ARCHITECTURE

LAST REVISION 10-11-12
DATE PLOTTED => 24-JAN-2013
TIME PLOTTED => 16:56

Dist	COUNTY	ROUTE	POST MILES TOTAL PROJECT	SHEET No.	TOTAL SHEETS
03	Pla	89	T8.6/10.9	30	34

LICENSED LANDSCAPE ARCHITECT

1-22-13
PLANS APPROVAL DATE

LICENSED LANDSCAPE ARCHITECT
JAMES G. WILLIAMSON
No. 5415
Signature
02-28-14
Renewal Date
01-03-13
Date
STATE OF CALIFORNIA

THE STATE OF CALIFORNIA OR ITS OFFICERS OR AGENTS SHALL NOT BE RESPONSIBLE FOR THE ACCURACY OR COMPLETENESS OF SCANNED COPIES OF THIS PLAN SHEET.

NOTE:

FOR ACCURATE RIGHT OF WAY DATA, CONTACT RIGHT OF WAY ENGINEERING AT THE DISTRICT OFFICE.

EROSION CONTROL (TYPE 1)
- HYDROSEED
- HYDROMULCH

EROSION CONTROL (TYPE 2)
- HYDROSEED
- STRAW
- HYDROMULCH

EROSION CONTROL QUANTITIES

STATION	(N) EROSION CONTROL TYPE	HYDROSEED	STRAW	HYDROMULCH
		SQFT	SQFT	SQFT
"B2" 42+60 TO 43+86	1	2150		2150
"B2" 43+86 TO 44+47	2	500	500	500
"B2" 44+47 TO 45+00	1	1150		1150
"B2" 124+26 TO 124+68	2	770	770	770
TOTAL		4570	1270	4570

(N) - NOT A SEPARATE PAY ITEM, FOR INFORMATION ONLY

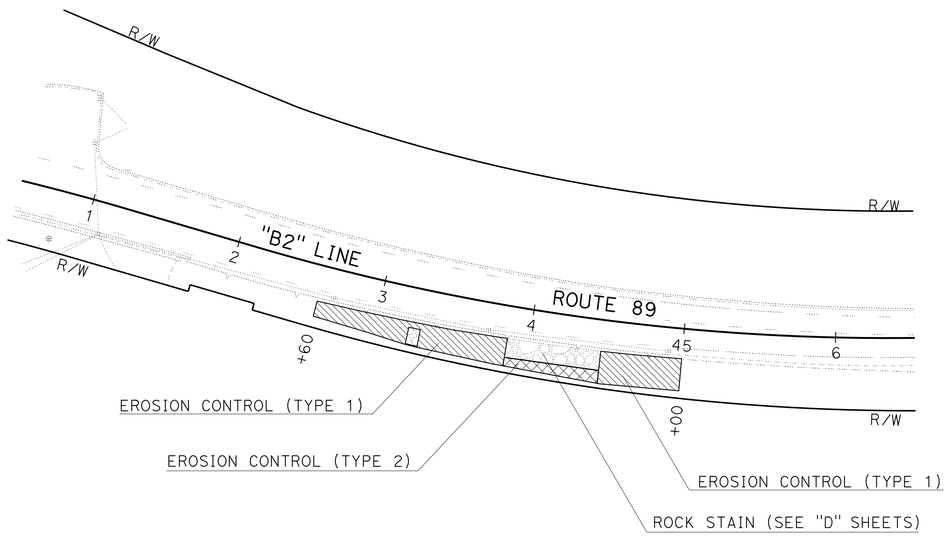

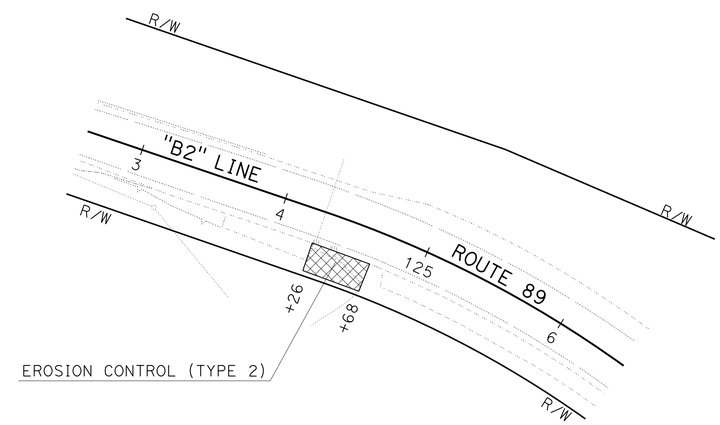

EROSION CONTROL DETAILS

SCALE 1"=50'

ECD-1

APPROVED FOR EROSION CONTROL WORK ONLY

STATE OF CALIFORNIA - DEPARTMENT OF TRANSPORTATION
Caltrans LANDSCAPE ARCHITECTURE

SENIOR LANDSCAPE ARCHITECT: T CHRIS JOHNSON

CALCULATED-DESIGNED BY: J WILLIAMSON
CHECKED BY: T C JOHNSON

REVISED BY
DATE REVISED

LAST REVISION 10-11-12
DATE PLOTTED => 24-JAN-2013
TIME PLOTTED => 16:57

Dist	COUNTY	ROUTE	POST MILES TOTAL PROJECT	SHEET No.	TOTAL SHEETS
03	Pla	89	T8.6/10.9	31	34

REGISTERED CIVIL ENGINEER 12-7-12 DATE

1-22-13
PLANS APPROVAL DATE

REGISTERED PROFESSIONAL ENGINEER Gurinderpal Bhullar No. C48815 Exp. 9-30-14 CIVIL STATE OF CALIFORNIA

THE STATE OF CALIFORNIA OR ITS OFFICERS OR AGENTS SHALL NOT BE RESPONSIBLE FOR THE ACCURACY OR COMPLETENESS OF SCANNED COPIES OF THIS PLAN SHEET.

NOTES:

Unless otherwise specified in the special provisions, all temporary warning signs shall have black legend on orange background.

California code are designated by (CA). Otherwise, Federal (MUTCD) codes are shown.

TYPICAL LANE CLOSURE WITH REVERSIBLE CONTROL

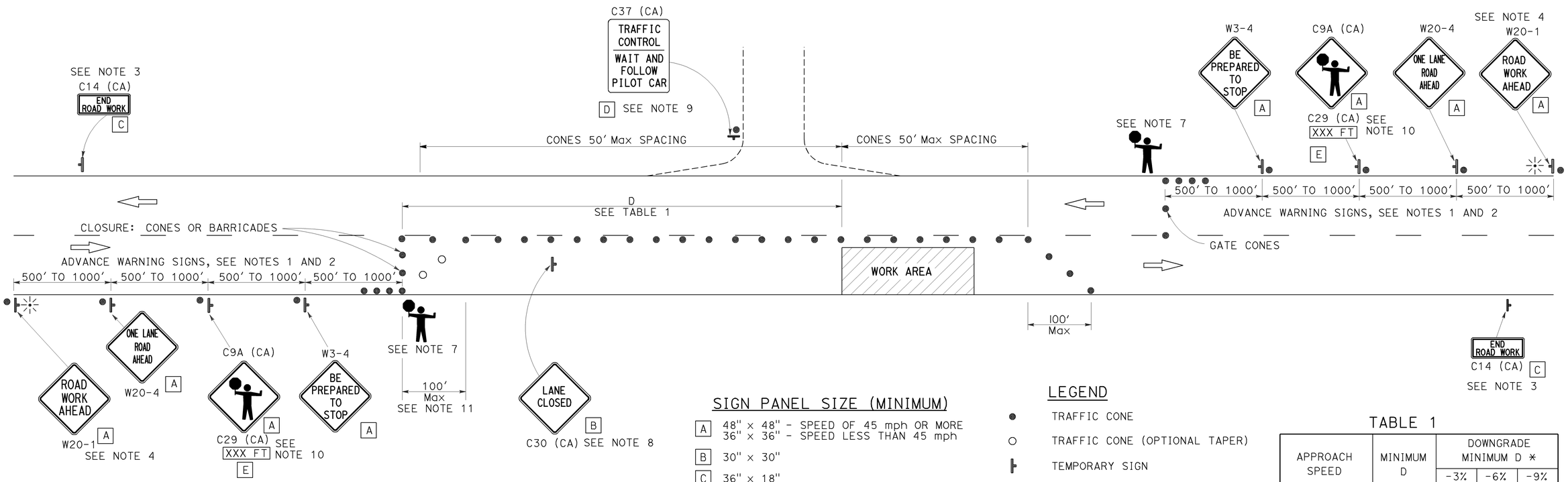

SIGN PANEL SIZE (MINIMUM)

- A: 48" x 48" - SPEED OF 45 mph OR MORE; 36" x 36" - SPEED LESS THAN 45 mph
- B: 30" x 30"
- C: 36" x 18"
- D: 36" x 42"
- E: 36" x 9"

LEGEND

- TRAFFIC CONE
- TRAFFIC CONE (OPTIONAL TAPER)
- TEMPORARY SIGN
- PORTABLE FLASHING BEACON
- FLAGGER

TABLE 1

APPROACH SPEED	MINIMUM D	DOWNGRADE MINIMUM D *		
		-3%	-6%	-9%
mph	ft	ft	ft	ft
25 AND BELOW	155	158	165	173
30	200	205	215	227
35	250	257	271	287
40	305	315	333	354
45	360	378	400	427
50	425	446	474	507
55	495	520	553	593
60	570	598	638	686
65	645	682	728	785

* USE ON SUSTAINED DOWNGRADE STEEPER THAN -3 PERCENT AND LONGER THAN 1 MILE.

NOTES:

1. Where approach speeds are low, advance warning signs may be placed at 300' spacing, and closer in urban areas.
2. Each advance warning sign in each direction of travel shall be equipped with at least two flags for daytime closure. Each flag shall be at least 16" x 16" in size and shall be orange or fluorescent red-orange in color. Flashing beacons shall be placed at the locations indicated for lane closure during hours of darkness.
3. A C14 (CA) "END ROAD WORK" sign, as appropriate, shall be placed at the end of the lane control unless the end of work area is obvious, or ends within a larger project's limits.
4. If the W20-1 sign would follow within 2000' of a stationary W20-1 or C11 (CA) "ROAD WORK NEXT _____MILES", use a W20-4 sign for the first advance warning sign.
5. All cones used for lane closures during the hours of darkness shall be fitted with retroreflective bands (or sleeves) as specified in the specifications.
6. Portable delineators, placed at one-half the spacing indicated for traffic cones, may be used instead of cones for daytime closures only.
7. Additional advance flaggers may be required. Flagger should stand in a conspicuous place, be visible to approaching traffic as well as approaching vehicles after the first vehicle has stopped. During the hours of darkness, the flagging-station and flagger shall be illuminated and clearly visible to approaching traffic. The illumination footprint of the lighting on the ground shall be at least 20' in diameter. Place a minimum of four cones at 50' intervals in advance of flagger station as shown.
8. Place C30 (CA) "LANE CLOSED" sign at 500' to 1000' intervals throughout extended work areas. They are optional if the work area is visible from the flagger station.
9. When a pilot car is used, place a C37 (CA) "TRAFFIC CONTROL-WAIT AND FOLLOW PILOT CAR" sign at all intersections within traffic control area. Signs shall be clean and visible at all times.
10. An optional C29 (CA) sign may be placed below the C9A (CA) sign.
11. Traffic cones or barricades may be placed on the optional taper as shown, barricades shall be Type I, II, or III.

STATE OF CALIFORNIA
DEPARTMENT OF TRANSPORTATION

TRAFFIC CONTROL SYSTEM FOR LANE CLOSURE ON TWO LANE CONVENTIONAL HIGHWAYS

NO SCALE

TCS-1

STATE OF CALIFORNIA - DEPARTMENT OF TRANSPORTATION

Caltrans

FUNCTIONAL SUPERVISOR | CALCULATED-DESIGNED BY | CHECKED BY | REVISED BY | DATE REVISED

LAST REVISION 00-00-00 | DATE PLOTTED => 10-DEC-2012 | TIME PLOTTED => 09:45

TO ACCOMPANY PLANS DATED 1-22-13

Dist	COUNTY	ROUTE	POST MILES TOTAL PROJECT	SHEET No.	TOTAL SHEETS
03	Pla	89	T8.6/10.9	32	34

Glenn DeCou
REGISTERED CIVIL ENGINEER

October 19, 2012
PLANS APPROVAL DATE

REGISTERED PROFESSIONAL ENGINEER Glenn DeCou No. C34547 Exp. 9-30-13 CIVIL STATE OF CALIFORNIA

THE STATE OF CALIFORNIA OR ITS OFFICERS OR AGENTS SHALL NOT BE RESPONSIBLE FOR THE ACCURACY OR COMPLETENESS OF SCANNED COPIES OF THIS PLAN SHEET.

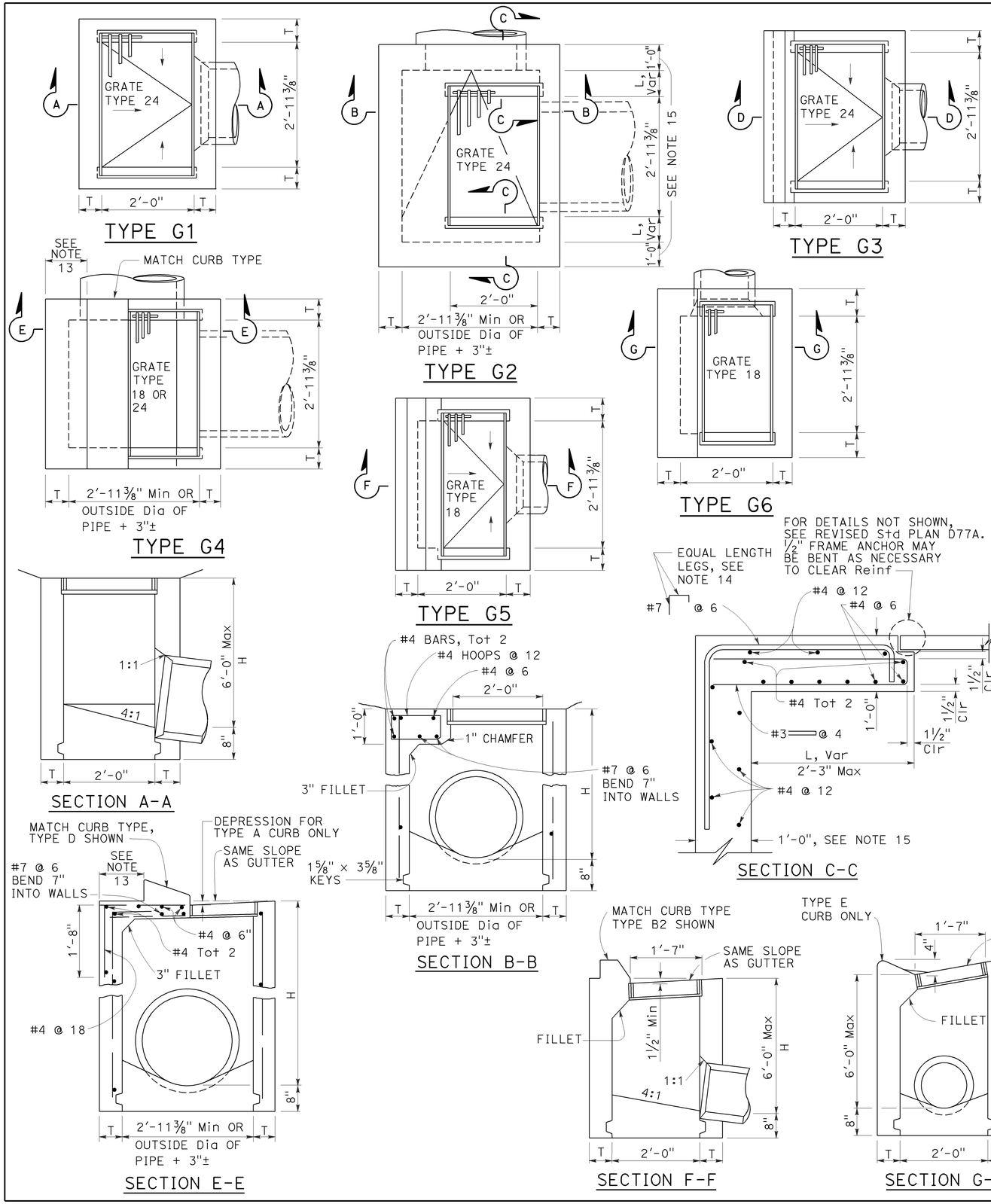

NOTES:

1. "H" is the difference in elevation between the outlet pipe flow line and the normal gutter grade line undepressed.
2. For "T" wall thickness, see Table A below.
3. Wall reinforcing not required when "H" is 8'-0" or less and the unsupported width or length is 7'-0" or less. Walls exceeding these limits shall be reinforced with #4 bars @ 1'-6" ± centers placed 1½" clear to inside of box unless otherwise shown.
4. Inlet bottom reinforcing not required. See Standard Plan D74C for alternative reinforced bottom and alternative half round bottom.
5. Steps-None required where "H" is less than 2'-6". Where "H" is 2'-6" or more, install steps with lowest rung 1'-0" above the floor and highest rung not more than 6" below top of inlet. The distance between steps shall not exceed 1'-0" and shall be uniform throughout the length of the wall. Place steps in the wall without an opening. Steps inserts may be substituted for the bar steps. Step inserts shall comply with State Industrial Safety requirements. See Standard Plan D74C for step details.
6. Details shown apply to both metal and concrete pipe.
7. Pipe(s) can be placed in any wall.
8. Curb section shall match adjacent curb.
9. Basin floors shall have wood trowel finish and a minimum slope of 12:3 from all directions toward outlet pipe.
10. Set inlet so that grate bars are parallel to direction of principal surface flow.
11. See Revised Standard Plans D77A and D77B for grate and frame details and weights of miscellaneous iron and steel.
12. See Standard Plan D78A for gutter depression details.
13. This dimenison will vary with different grates, curbs types, box width and wall thickness.
14. Bar may be rotated as necessary to clear opening. Where "L" is 6" or less, bar may be omitted.
15. Where "L" is 6" or less, wall thickness shall be as shown in Table A.
16. Cast-in-place inlets to be formed around all pipes/stubs intersecting the inlet, and concrete poured in one continuous operation. Precast inlets shall have mortared connections conforming to details for Type GCP Inlet shown on Standard Plan D75B. See Standard Specifications for mortar composition.

TABLE A

CONCRETE QUANTITIES				
TYPE	H=3'-0" TO 8'-0" (T=6")		H=8'-1" TO 20'-0" (T=8")	
	H=3'-0" (CY)	ADDITIONAL PCC PER FOOT (CY)	H=8'-1" (CY)	ADDITIONAL PCC PER FOOT (CY)
G-1	0.95	0.220	See Note A	SEE NOTE A
G-2*	1.31	0.255	3.50	0.357
G-3	1.03	0.220	See Note A	SEE NOTE A
G-4* (TYPE 24)	1.27	0.255	3.48	0.357
G-4* (TYPE 18)	1.30	0.255	3.50	0.357
G-5	1.02	0.220	SEE NOTE A	SEE NOTE A
G-6	1.04	0.220	SEE NOTE A	SEE NOTE A

TABLE BASED ON 8" FLOOR SLAB. NO DEDUCTIONS ARE TO BE MADE TO THESE QUANTITIES BECAUSE OF PIPE OPENINGS, DIFFERENT FLOOR ALTERNATIVES OR DIFFERENT CURB TYPES. * QUANTITIES FOR TYPE G-2 AND G-4 INLETS BASED ON THE MINIMUM INTERIOR DIMENSIONS.

NOTE A:

Maximum allowable height 6'-0".

STATE OF CALIFORNIA
DEPARTMENT OF TRANSPORTATION

DRAINAGE INLETS

NO SCALE

RSP D73 DATED OCTOBER 19, 2012 SUPERSEDES STANDARD PLAN D73 DATED MAY 20, 2011 - PAGE 156 OF THE STANDARD PLANS BOOK DATED 2010.

REVISED STANDARD PLAN RSP D73

2010 REVISED STANDARD PLAN RSP D73

7-19-12

Dist	COUNTY	ROUTE	POST MILES TOTAL PROJECT	SHEET No.	TOTAL SHEETS
03	Pla	89	T8.6/10.9	33	34

Raymond Don Tsztoo
REGISTERED CIVIL ENGINEER

July 20, 2012
PLANS APPROVAL DATE

REGISTERED PROFESSIONAL ENGINEER Raymond Don Tsztoo No. C37332 Exp. 6-30-14 CIVIL STATE OF CALIFORNIA

THE STATE OF CALIFORNIA OR ITS OFFICERS OR AGENTS SHALL NOT BE RESPONSIBLE FOR THE ACCURACY OR COMPLETENESS OF SCANNED COPIES OF THIS PLAN SHEET.

TO ACCOMPANY PLANS DATED 1-22-13

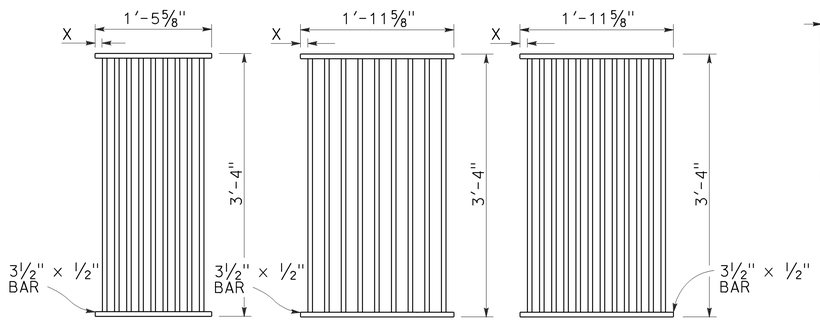

TYPE 18-9

1⅜" Clear spacing. Use within the roadbed on highways where bicycles and pedestrians are excluded.

TYPE 24-9

2" Clear spacing. Use in locations off the roadbed on all types of highways.

TYPE 24-12

1⅜" Clear spacing. Use within the roadbed on highways where bicycles and pedestrians are excluded.

RECTANGULAR GRATE DETAILS

(See table below)

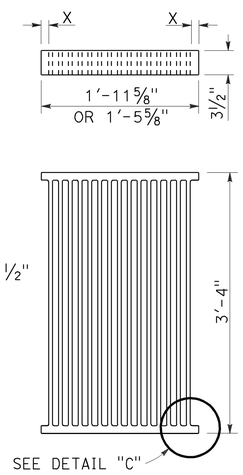

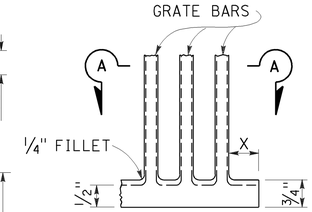

DETAIL "C"

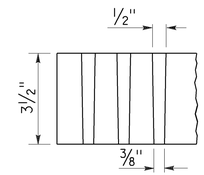

SECTION A-A

ALTERNATIVE CAST DUCTILE IRON GRATE OR CAST CARBON STEEL GRATE

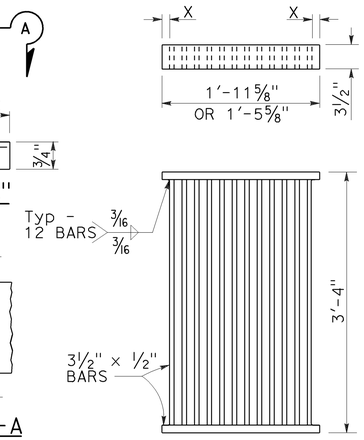

ALTERNATIVE WELDED GRATE

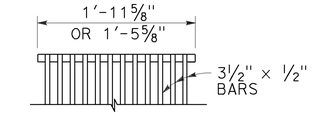

CAST END BLOCK

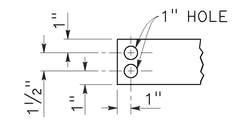

END OF BAR

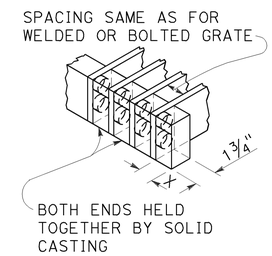

ALTERNATIVE CAST DUCTILE IRON OR CAST CARBON STEEL END BLOCK GRATE

NOTES:

1. Grate type numbers refer to approximate width of grate in inches and number of bars, respectively.
2. Contractor has the option of using cast ductile iron, cast carbon steel, welded, bolted, or cast end block grate.
3. Rounded top of bars optional on all grates.
4. Pipe inlets with a grate shall be placed so that bars parallel direction of principle surface flow.
5. Complete joint penetration butt welds may be substituted for the fillet welds on all anchors.
6. Standard square, hexagon, round or equivalent headed anchors may be substituted for the right angle hooks on the anchors shown on this plan.
7. Grate and frame weights are based on welded grates (weights of face angles, steps, protection bars, etc. are not included).
8. Connect chain to grate and frame only at locations shown on the plans. When chain is required, do not use cast ductile iron grates.

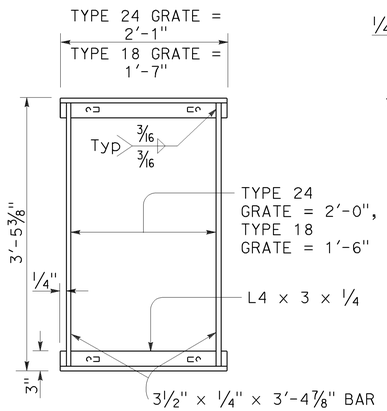

TYPICAL FRAME

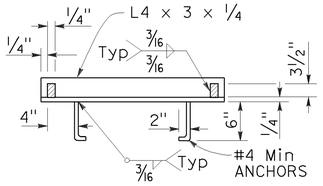

CROSS SECTION

(Thru frame)

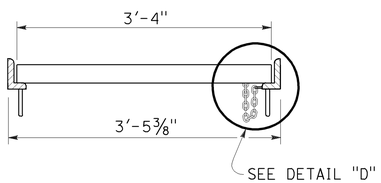

LONGITUDINAL SECTION

(Thru frame and grate)

RECTANGULAR FRAME DETAILS

(For all rectangular grates)

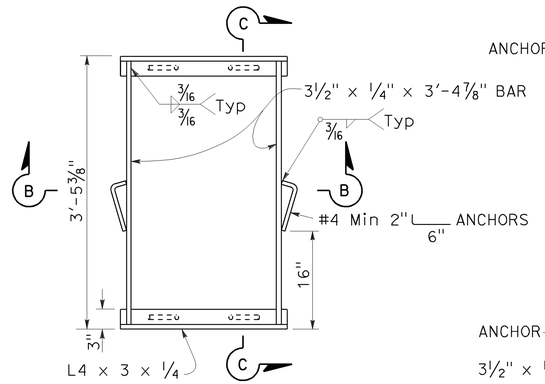

TYPICAL FRAME

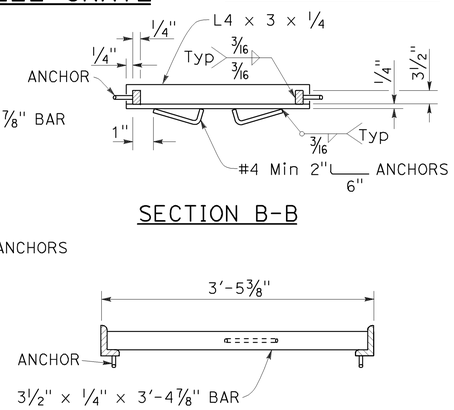

SECTION B-B

SECTION C-C

ALTERNATIVE ANCHOR FOR RECTANGULAR FRAME

(For details not shown, See Rectangular Frame Details)

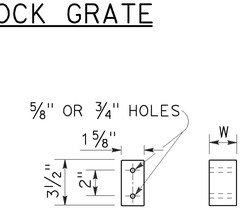

BAR SPACER

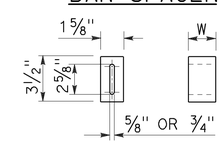

ALTERNATIVE SPACER

W = 1⅜" or 2"

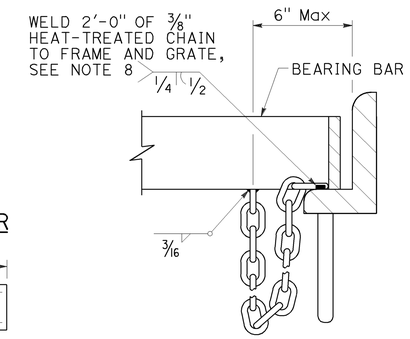

DETAIL "D"

(Steel grates only)

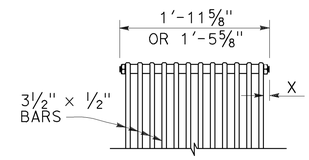

BOLTED END BLOCK

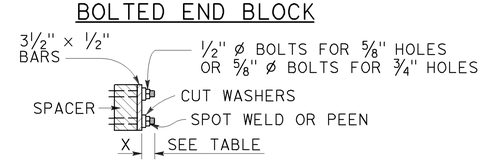

BOLTING DETAIL

ALTERNATIVE BOLTED GRATE

GRATE BAR SPACING TABLE

TYPE	No. OF BARS	CLEAR BAR SPACING	X
18-9	9	1⅜"	1 1/16"
24-9	9	2"	1 9/16"
24-12	12	1⅜"	1¼"

INLET TYPE	COVER TYPE	WEIGHT LB
OS	PLATE	174
OL-7	PLATE	170
OL-10	PLATE	170
OL-14	PLATE	170
OL-21	PLATE	170
OCP	PLATE	112
OCPI	PLATE	112
OCPI	REDWOOD	42
OMP	PLATE	177
OMPI	PLATE	177

INLET TYPE	GRATE TYPE	No. OF GRATES	WEIGHT LB
GDO	24-12	2	634
GOL-7	24-12	1	326
GOL-10	24-12	1	326
GO,G1,G2,G3,G4 (TYPE 24)	24-9	1	263
	24-12	1	326
G4 (TYPE 18),G5,G6	18-9	1	249
GT1	18-9	2	498
GT2	18-9	2	498
GT3	24-12	2	652
GT4	24-12	2	652
TRASH RACK			22
GRATE CHAIN			3

BASIS FOR Misc IRON & STEEL FINAL PAY WEIGHTS FOR DRAINAGE INLETS

(See Note 7)

STATE OF CALIFORNIA
DEPARTMENT OF TRANSPORTATION

GRATE DETAILS

NO SCALE

RSP D77A DATED JULY 20, 2012 SUPERSEDES STANDARD PLAN D77A DATED MAY 20, 2011 - PAGE 164 OF THE STANDARD PLANS BOOK DATED 2010.

REVISED STANDARD PLAN RSP D77A

2010 REVISED STANDARD PLAN RSP D77A

6-13-12

Dist	COUNTY	ROUTE	POST MILES TOTAL PROJECT	SHEET No.	TOTAL SHEETS
03	Pla	89	T8.6/10.9	34	34

REGISTERED CIVIL ENGINEER

July 20, 2012
PLANS APPROVAL DATE

Raymond Don Tsztoo No. C37332 Exp. 6-30-14 CIVIL — REGISTERED PROFESSIONAL ENGINEER — STATE OF CALIFORNIA

THE STATE OF CALIFORNIA OR ITS OFFICERS OR AGENTS SHALL NOT BE RESPONSIBLE FOR THE ACCURACY OR COMPLETENESS OF SCANNED COPIES OF THIS PLAN SHEET.

TO ACCOMPANY PLANS DATED 1-22-13

2010 REVISED STANDARD PLAN RSP D77B

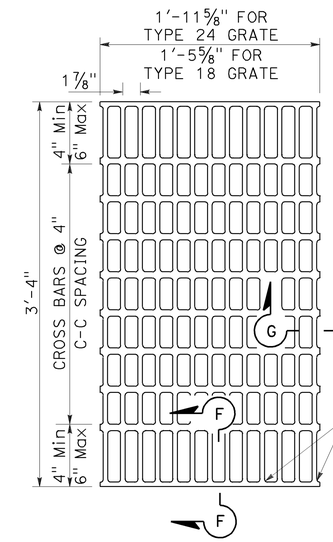

NOTES:

Bearing bars to be 3½" × ¼" bars on 1⅞" centers.

⅜"± ø Cross bars may be fillet welded, resistance welded or electroforged to bearing bars.

Weight of Type 24 grate = 141 LBS.

Weight of Type 18 grate = 107 LBS. (Type 24 grate shown).

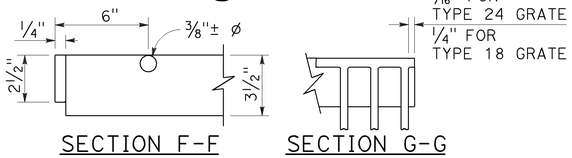

SECTION F-F SECTION G-G

TYPE 18-10 AND 24-13 GRATE

(Welded Steel)

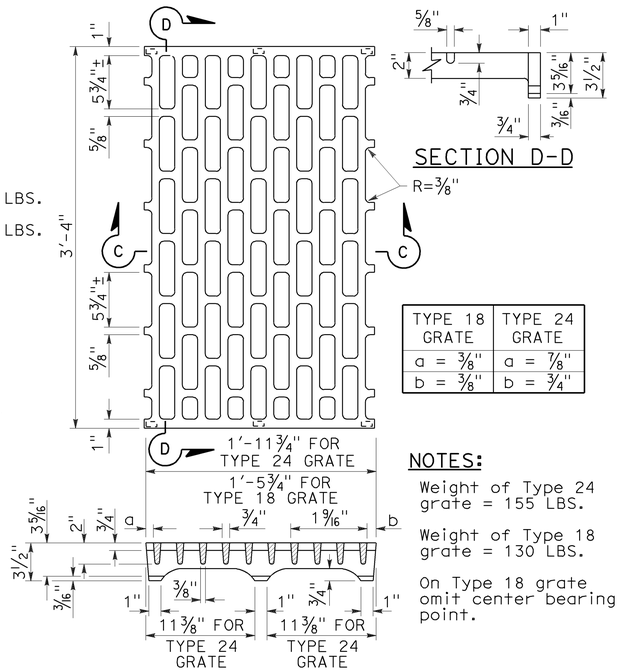

SECTION D-D

TYPE 18 GRATE	TYPE 24 GRATE
a = ⅜"	a = ⅞"
b = ⅜"	b = ¾"

NOTES:

Weight of Type 24 grate = 155 LBS.

Weight of Type 18 grate = 130 LBS.

On Type 18 grate omit center bearing point.

SECTION C-C

TYPE 18-8C AND 24-10C GRATE

(Cast ductile iron)

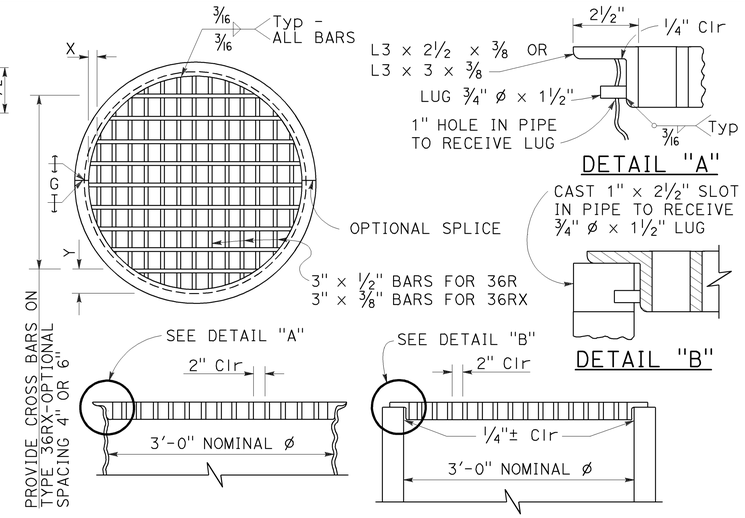

TYPE 36R AND 36RX GRATE DETAILS

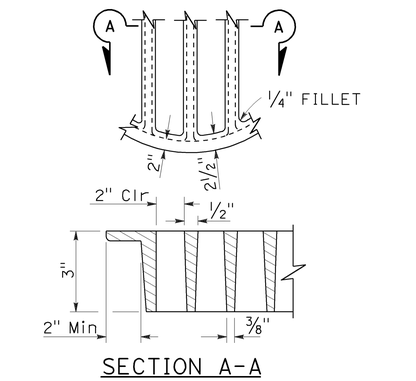

SECTION A-A

ALTERNATIVE CAST DUCTILE IRON GRATE OR CAST CARBON STEEL GRATE TYPE 36R AND 36RX

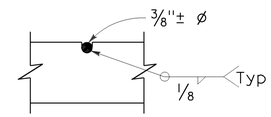

⅜"± ø Cross bars may be fillet welded, resistance welded or electroforged to bearing bars.

CROSS BAR DETAIL TYPE 36RX GRATE (WELDED STEEL)

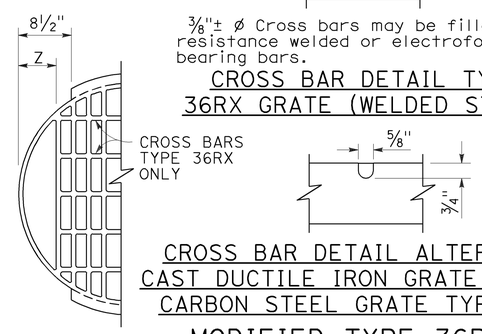

CROSS BAR DETAIL ALTERNATIVE CAST DUCTILE IRON GRATE OR CAST CARBON STEEL GRATE TYPE 36RX

MODIFIED TYPE 36R AND 36RX GRATE FOR ODI INLET

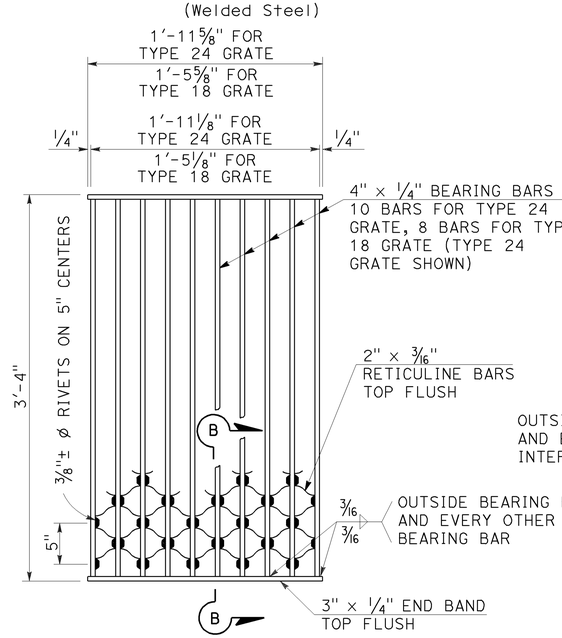

NOTES:

Weight of Type 24 grate = 182 LBS.
Weight of Type 18 grate = 145 LBS.

SECTION B-B

TYPE 18-8S AND 24-10S GRATE

(Welded Steel) Reticuline type

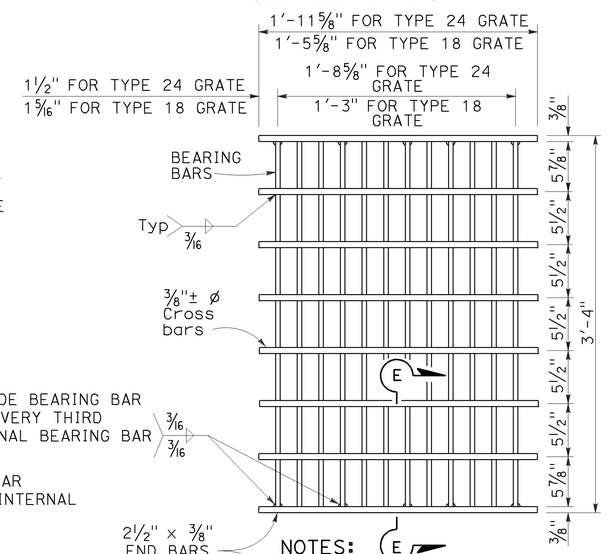

SECTION E-E

NOTES:

Bearing bars to be 3½" × ⅜" bars on 1⅞" centers.

12 Bars for Type 24 grate - 9 bars for Type 18 grates. (Type 24 grate shown).

Weight of Type 24 grate = 192 LBS.

Weight of Type 18 grate = 145 LBS.

⅜"± ø Cross bars may be fillet welded, resistance welded or electroforged to bearing bars.

TYPE 18-9X AND 24-12X GRATE

(Welded Steel)

NOTES:

1. When alternative grates are allowed - Final pay based on alternative with the lesser weight.
2. Use frame shown on Standard Plan D74A, D74B or RSP D77A as appropriate.
3. When Type 24-10S, 24-12X or 24-13 grates are used with GDO Inlets, a ¼" × 3½" × 3'-4⅞" steel bar shall be welded across the center of inlet frame to separate the individual grates.
4. See Revised Standard Plan RSP D77A for connecting chain to welded grate and frame. When chain is required, do not use cast ductile iron grate.

GRATE BAR SPACING TABLE

TYPE	No. OF BARS	CLEAR BAR SPACING	X	Y 4" SPACING	Y 6" SPACING	Z
36R	13	2"	2⅛"	-	-	-
36RX (STEEL)	15	2"	9/16"	3¾"	5¾"	-
36RX (CAST)	13	2"	2⅛"	3¾"	5¾"	-
36R Mod	12	2"	2⅛"	-	-	5"
36RX Mod (STEEL)	13	2"	9/16"	3¾"	5¾"	5 11/16"
36RX Mod (CAST)	12	2"	2⅛"	3¾"	5¾"	5"

BASIS FOR Misc IRON AND STEEL FINAL PAY WEIGHTS FOR DRAINAGE INLETS

INLET TYPE	GRATE TYPE	No. OF GRATES	WEIGHT LB
GDO (SEE NOTE 4)	24-10C	2	391
	24-10S	2	456
	24-12X	2	473
	24-13	2	374
GO,GOL,G1,G2, G3,G4 (TYPE 24)	24-10C	1	202
	24-10S	1	229
	24-12X	1	239
	24-13	1	188
G4 (TYPE 18) G5,G6	18-8S	1	187
	18-9X	1	187
	18-10	1	149
GT1,GT2	18-8S	2	374
	18-9X	2	374
	18-10	2	298
GT3,GT4	24-10C	2	404
	24-10S	2	458
	24-12X	2	478
	24-13	2	376
ODI	36RX (Mod)	1	196
GMP,GCP,GCPI	36RX	1	215
ODI	36R (Mod)	1	220
GMP,GCP,GCPI	36R	1	236
TRASH RACK			22
GRATE CHAIN			3

STATE OF CALIFORNIA
DEPARTMENT OF TRANSPORTATION

BICYCLE TRAVERSABLE GRATE DETAILS

NO SCALE

RSP D77B DATED JULY 20, 2012 SUPERSEDES STANDARD PLAN D77B DATED MAY 20, 2011 - PAGE 165 OF THE STANDARD PLANS BOOK DATED 2010.

REVISED STANDARD PLAN RSP D77B

4-17-12