Dist	COUNTY	ROUTE	POST MILES TOTAL PROJECT	SHEET No.	TOTAL SHEETS
03	ED	50	15.8/R28.8	1	9

INDEX OF PLANS

SHEET No.	DESCRIPTION
1	TITLE AND LOCATION MAP
2	CONSTRUCTION DETAILS AND SUMMARY OF QUANTITIES
3	CONSTRUCTION AREA SIGNS
4-7	REVISED STANDARD PLANS

STRUCTURE PLANS

8-9 ROUTE 50 BRIDGES

THE STANDARD PLANS LIST APPLICABLE TO THIS CONTRACT IS INCLUDED IN THE NOTICE TO BIDDERS AND SPECIAL PROVISIONS BOOK.

STATE OF CALIFORNIA

DEPARTMENT OF TRANSPORTATION

PROJECT PLANS FOR CONSTRUCTION ON

STATE HIGHWAY

IN EL DORADO COUNTY NEAR PLACERVILLE AT VARIOUS LOCATIONS FROM FORNI ROAD OVERCROSSING TO SAWMILL UNDERCROSSING

TO BE SUPPLEMENTED BY STANDARD PLANS DATED MAY 2006

LOCATION MAP

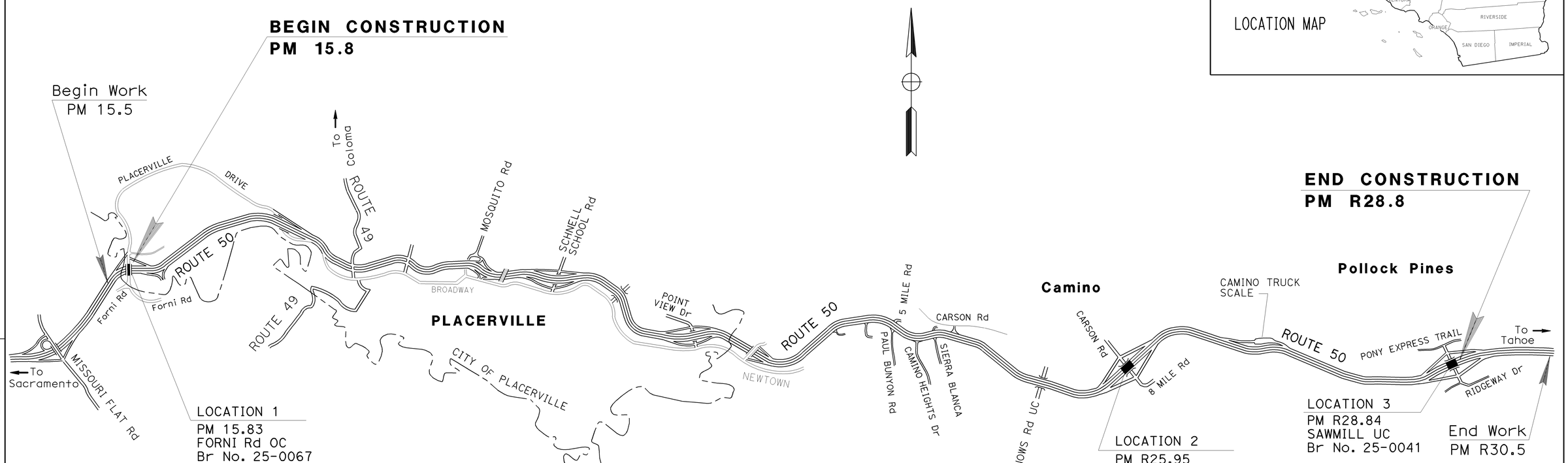

PROJECT MANAGER BRIAN TOEPFER

DESIGN ENGINEER BRIAN TOEPFER

D. S. Lamb 10-19-10

PROJECT ENGINEER DATE
REGISTERED CIVIL ENGINEER

October 19, 2010

PLANS APPROVAL DATE

REGISTERED PROFESSIONAL ENGINEER DAVID S. LAMB No. C53386 Exp. 06-30-11 CIVIL STATE OF CALIFORNIA

THE STATE OF CALIFORNIA OR ITS OFFICERS OR AGENTS SHALL NOT BE RESPONSIBLE FOR THE ACCURACY OR COMPLETENESS OF SCANNED COPIES OF THIS PLAN SHEET.

THE CONTRACTOR SHALL POSSESS THE CLASS (OR CLASSES) OF LICENSE AS SPECIFIED IN THE "NOTICE TO BIDDERS."

NO SCALE

CONTRACT No.	03-3M6504
PROJECT ID	0300000588

LAST REVISION 00-00-00

DATE PLOTTED => 21-OCT-2010
TIME PLOTTED => 09:42

Dist	COUNTY	ROUTE	POST MILES TOTAL PROJECT	SHEET No.	TOTAL SHEETS
03	ED	50	15.8/R28.8	2	9

10-19-10
REGISTERED CIVIL ENGINEER DATE

10-19-10
PLANS APPROVAL DATE

REGISTERED PROFESSIONAL ENGINEER
DAVID S. LAMB
No. C53386
Exp. 06/30/11
CIVIL
STATE OF CALIFORNIA

THE STATE OF CALIFORNIA OR ITS OFFICERS OR AGENTS SHALL NOT BE RESPONSIBLE FOR THE ACCURACY OR COMPLETENESS OF SCANNED COPIES OF THIS PLAN SHEET.

LEGEND

COLD PLANE AC PAVEMENT

PAVEMENT DELINEATION QUANTITIES

LOCATION	COUNTY	ROUTE	BRIDGE NUMBER	BRIDGE NAME	4" TWO-COMPONENT PAINT TRAFFIC STRIPE (BROKEN 36-12)	4" TWO-COMPONENT PAINT TRAFFIC STRIPE			REMOVE YELLOW THERMOPLASTIC TRAFFIC STRIPE (HAZARDOUS WASTE)
					Det 11	Det 24	Det 27B	Det 21	
					LF	LF	LF	LF	LF
1	ED	50	25-0067	FORNI ROAD OC			20	500	448
2	ED	50	25-0040	EAST CAMINO UC	400	400	400		
3	ED	50	25-0041	SAWMILL UC	580	580	580		
				SUBTOTAL	980	980	1,000	500	
				TOTAL	980	2,480			448

ROADWAY QUANTITIES

LOCATION	BRIDGE NUMBER	BRIDGE NAME	MINOR HMA	COLD PLANE AC PAVEMENT
			TON	SQYD
1	25-0067	FORNI ROAD OC	15	150
2	25-0040	EAST CAMINO UC	45	440
3	25-0041	SAWMILL UC	205	1,680
		TOTAL	265	2,270

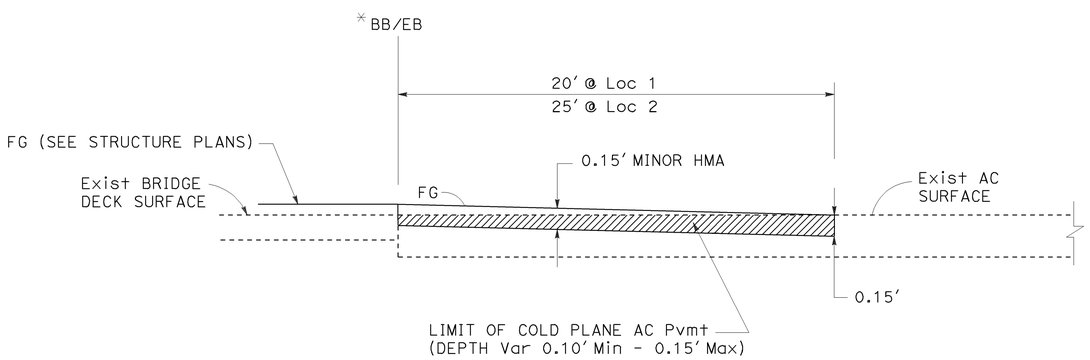

LOCATION 1, 2

NO SCALE

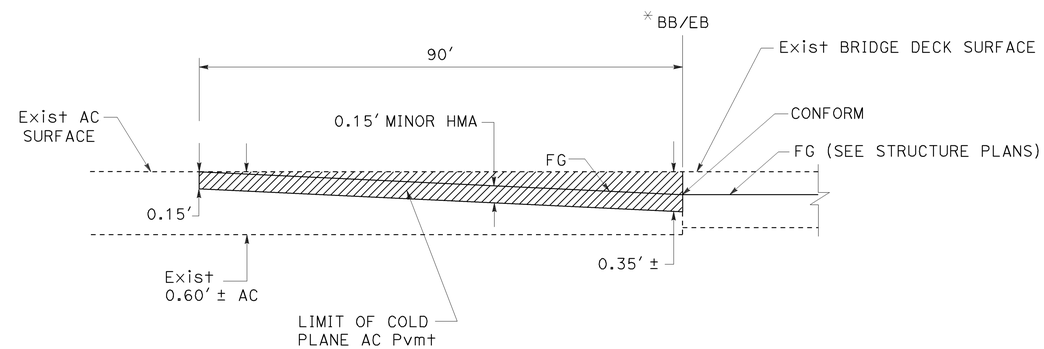

LOCATION 3

NO SCALE

AC PAVEMENT CONFORM DETAIL

* BEGIN AND END OF BRIDGE OR END OF APPROACH AND DEPARTURE SLABS

NOTE: COLD PLANE OF APPROACH AND DEPARTURE IS EP TO EP AND AS DIRECTED BY THE ENGINEER.

CONSTRUCTION DETAILS AND SUMMARY OF QUANTITIES

C-1

STATE OF CALIFORNIA - DEPARTMENT OF TRANSPORTATION
MAINTENANCE
Caltrans

FUNCTIONAL SUPERVISOR: BRIAN TOEPFER
CALCULATED-DESIGNED BY: SHAHRAM RAISI
CHECKED BY: DAVID S. LAMB
REVISED BY
DATE REVISED

LAST REVISION 00-00-00
DATE PLOTTED => 20-OCT-2010
TIME PLOTTED => 15:16

Dist	COUNTY	ROUTE	POST MILES TOTAL PROJECT	SHEET No.	TOTAL SHEETS
03	ED	50	15.8/R28.8	3	9

REGISTERED CIVIL ENGINEER 10-19-10 DATE

10-19-10
PLANS APPROVAL DATE

REGISTERED PROFESSIONAL ENGINEER DAVID S. LAMB No. C53386 Exp. 06/30/11 CIVIL STATE OF CALIFORNIA

THE STATE OF CALIFORNIA OR ITS OFFICERS OR AGENTS SHALL NOT BE RESPONSIBLE FOR THE ACCURACY OR COMPLETENESS OF SCANNED COPIES OF THIS PLAN SHEET.

STATIONARY MOUNTED CONSTRUCTION AREA SIGNS

SIGN LETTER	SIGN CODE		PANEL SIZE	SIGN MESSAGE	NUMBER OF POST AND SIZE	NUMBER OF SIGNS
	FEDERAL	CALIFORNIA				
(A)	W20-1	C23	48" X 48"	ROAD WORK AHEAD	1 - 6" X 6"	5
(B)		C14	48" x 24"	END ROAD WORK	1 - 4" X 6"	11
(C)	W20-1	C23	60" X 60"	ROAD WORK AHEAD	2 - 4" X 6"	4

LEGEND

(X) CONSTRUCTION AREA SIGN LETTER

SIGN - SINGLE POST

SIGN - TWO POSTS

NOTES:

1. EXACT SIGN LOCATIONS TO BE DETERMINED BY THE ENGINEER.
2. THIS PLAN ACCURATE FOR CONSTRUCTION AREA SIGNS ONLY.
3. EXISTING UTILITY FACILITIES HAVE NOT BEEN PLOTTED ON THESE PLANS.

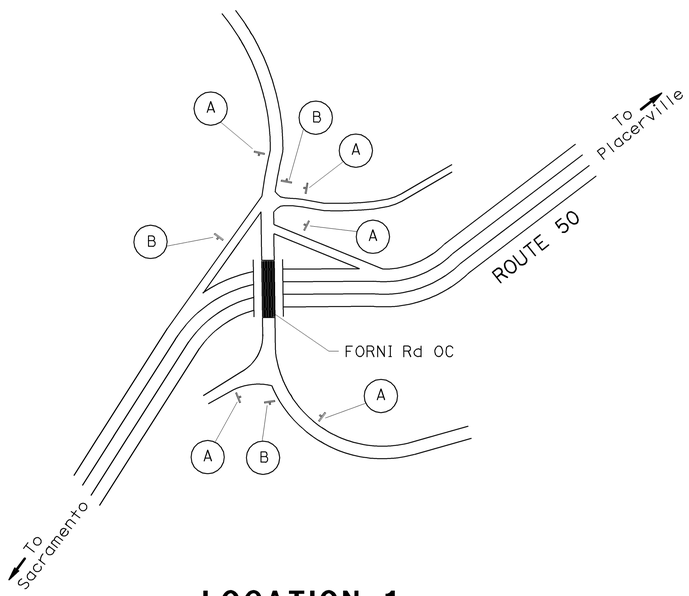

LOCATION 1
PM 15.83

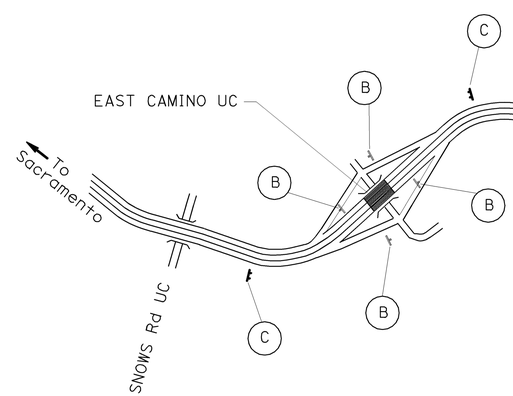

LOCATION 2
PM R25.95

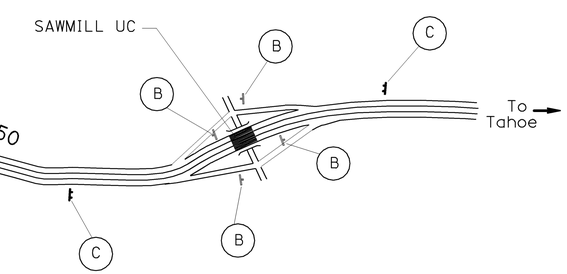

LOCATION 3
PM R28.84

CONSTRUCTION AREA SIGNS

NO SCALE

CS-1

STATE OF CALIFORNIA - DEPARTMENT OF TRANSPORTATION
Caltrans
MAINTENANCE

FUNCTIONAL SUPERVISOR: BRIAN TOEPFER
CALCULATED-DESIGNED BY: SHAHRAM RAISI
CHECKED BY: DAVID S. LAMB
REVISED BY / DATE REVISED

LAST REVISION 00-00-00
DATE PLOTTED => 20-OCT-2010
TIME PLOTTED => 15:16

DIST	COUNTY	ROUTE	POST MILES TOTAL PROJECT	SHEET NO.	TOTAL SHEETS
03	ED	50	15.8/R28.8	4	9

Randell D. Hiatt
REGISTERED CIVIL ENGINEER

June 6, 2008
PLANS APPROVAL DATE

REGISTERED PROFESSIONAL ENGINEER
Randell D. Hiatt
No. C50200
Exp. 6-30-09
CIVIL
STATE OF CALIFORNIA

The State of California or its officers or agents shall not be responsible for the accuracy or completeness of electronic copies of this plan sheet.

To accompany plans dated 10-19-10

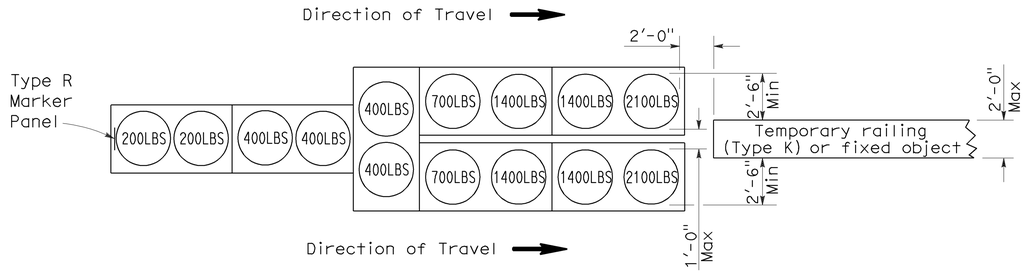

ARRAY 'TU14'

Approach speed 45 mph or more

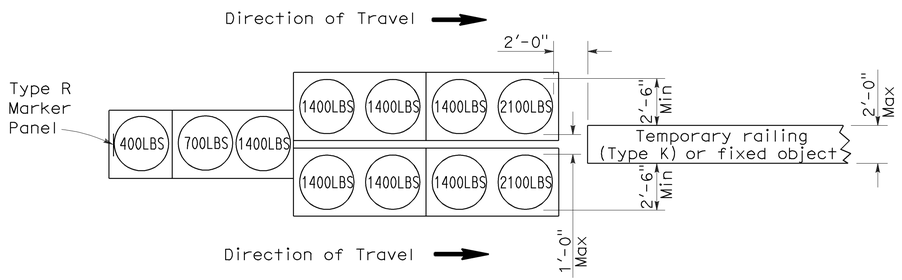

ARRAY 'TU11'

Approach speed less than 45 mph

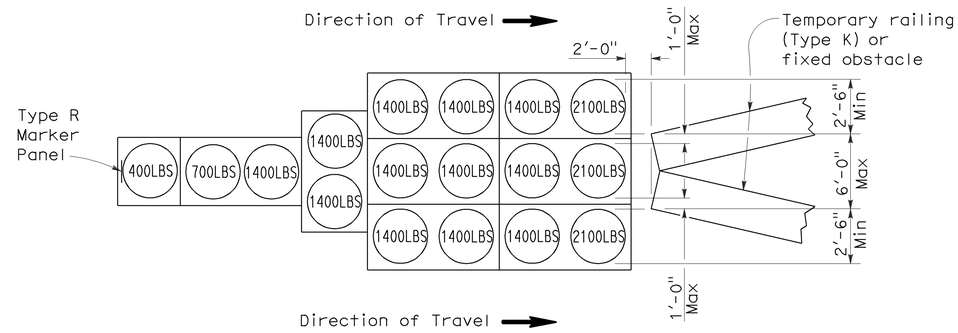

ARRAY 'TU17'

Approach speed less than 45 mph

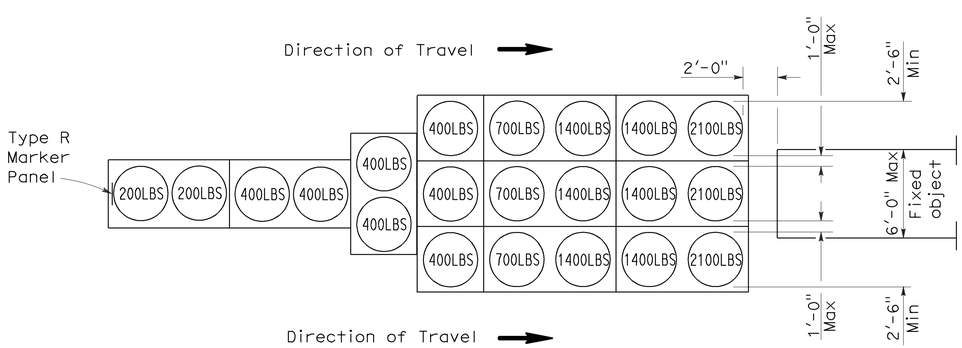

ARRAY 'TU21'

Approach speed 45 mph or more

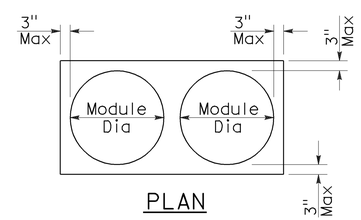

PLAN

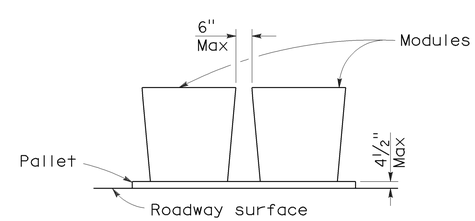

ELEVATION

CRASH CUSHION PALLET DETAIL

See Note 7

NOTES:

1. (XXX) Indicates sand filled module location and weight of sand in pounds for each module. Module spacing is based on the greater diameter of the module.
2. All sand weights are nominal.
3. Temporary crash cushion arrays shall not encroach on the traveled way.
4. Place the top of Type R marker panel 1" below the module lid.
5. Refer to Standard Plan A73B for marker details.
6. Approach speeds indicated conform to NCHRP 350 Report criteria.
7. Use of pallets is optional.

STATE OF CALIFORNIA
DEPARTMENT OF TRANSPORTATION

TEMPORARY CRASH CUSHION, SAND FILLED (UNIDIRECTIONAL)

NO SCALE

RSP T1A DATED JUNE 6, 2008 SUPERSEDES STANDARD PLAN T1A
DATED MAY 1, 2006 - PAGE 211 OF THE STANDARD PLANS BOOK DATED MAY 2006.

REVISED STANDARD PLAN RSP T1A

2006 REVISED STANDARD PLAN RSP T1A

DIST	COUNTY	ROUTE	POST MILES TOTAL PROJECT	SHEET NO.	TOTAL SHEETS
03	ED	50	15.8/R28.8	5	9

Randell D. Hiatt
REGISTERED CIVIL ENGINEER

June 6, 2008
PLANS APPROVAL DATE

REGISTERED PROFESSIONAL ENGINEER
Randell D. Hiatt
No. C50200
Exp. 6-30-09
CIVIL
STATE OF CALIFORNIA

The State of California or its officers or agents shall not be responsible for the accuracy or completeness of electronic copies of this plan sheet.

To accompany plans dated 10-19-10

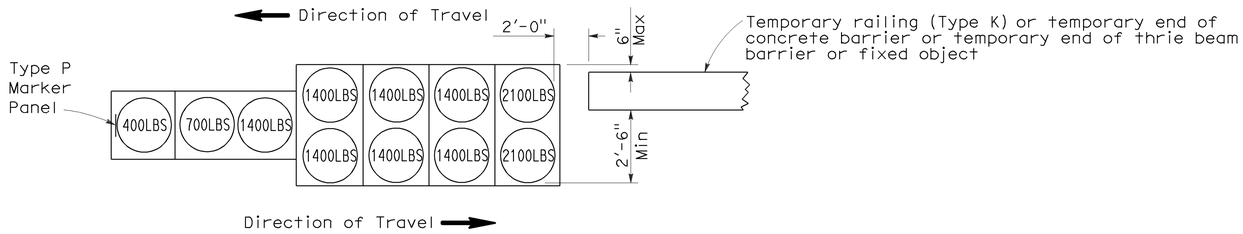

ARRAY 'TB11'

Approach speed less than 45 mph

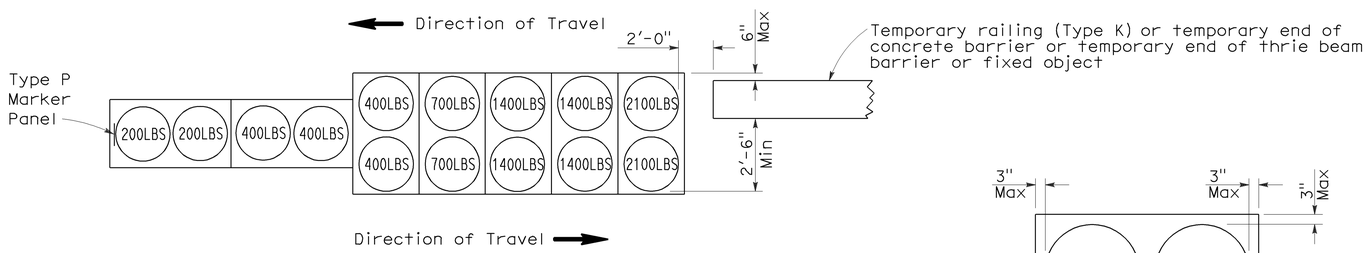

ARRAY 'TB14'

Approach speed 45 mph or more

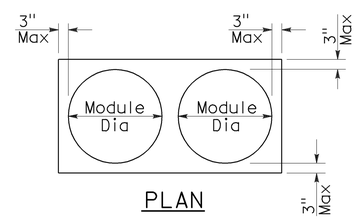

PLAN

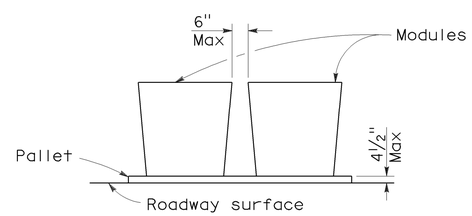

ELEVATION

CRASH CUSHION PALLET DETAIL

See Note 7

NOTES:

1. (XXX) Indicates sand filled module location and weight of sand in pounds for each module. Module spacing is based on the greater diameter of the module.
2. All sand weights are nominal.
3. Temporary crash cushion arrays shall not encroach on the traveled way.
4. Place the Type P marker panel so that the bottom of the panel rests upon the pallet.
5. Refer to Standard Plan A73B for marker details.
6. Approach speeds indicated conform to NCHRP 350 Report criteria.
7. Use of pallets is optional.

STATE OF CALIFORNIA
DEPARTMENT OF TRANSPORTATION

TEMPORARY CRASH CUSHION, SAND FILLED (BIDIRECTIONAL)

NO SCALE

RSP T1B DATED JUNE 6, 2008 SUPERSEDES STANDARD PLAN T1B
DATED MAY 1, 2006 - PAGE 212 OF THE STANDARD PLANS BOOK DATED MAY 2006.

REVISED STANDARD PLAN RSP T1B

2006 REVISED STANDARD PLAN RSP T1B

5-15-08

DIST	COUNTY	ROUTE	POST MILES TOTAL PROJECT	SHEET NO.	TOTAL SHEETS
03	ED	50	15.8/R28.8	6	9

Randell D. Hiatt
REGISTERED CIVIL ENGINEER

June 6, 2008
PLANS APPROVAL DATE

REGISTERED PROFESSIONAL ENGINEER
Randell D. Hiatt
No. C50200
Exp. 6-30-09
CIVIL
STATE OF CALIFORNIA

The State of California or its officers or agents shall not be responsible for the accuracy or completeness of electronic copies of this plan sheet.

To accompany plans dated 10-19-10

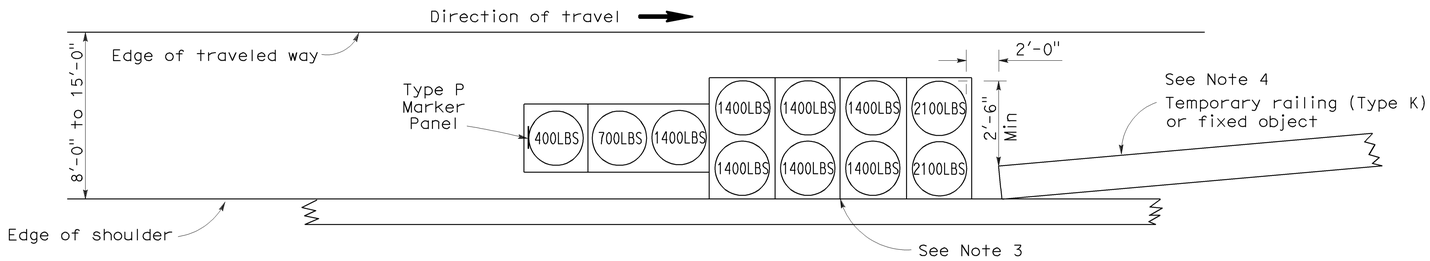

ARRAY 'TS11'

Approach speed less than 45 mph
See Note 9

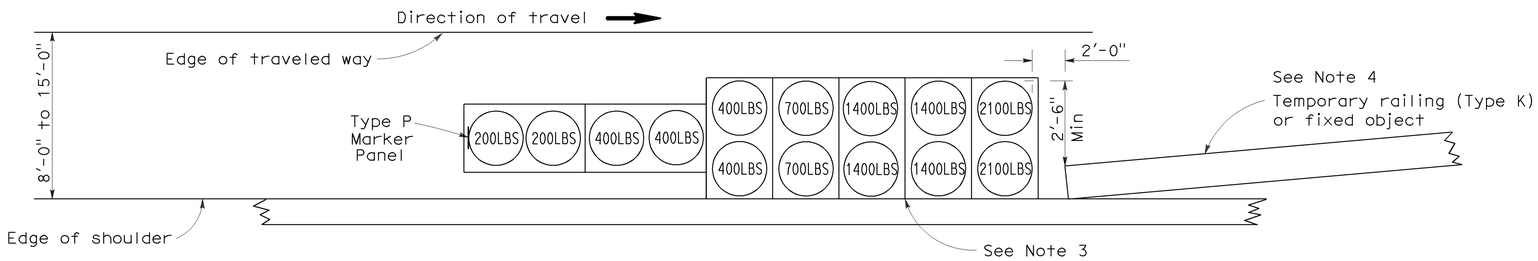

ARRAY 'TS14'

Approach speed 45 mph or more
See Note 9

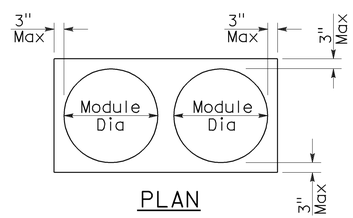

PLAN

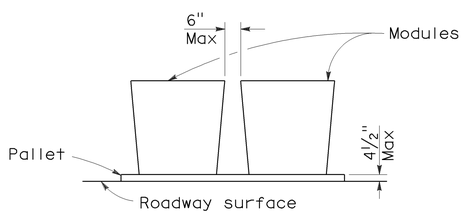

ELEVATION

CRASH CUSHION PALLET DETAIL

See Note 11

NOTES:

1. (XXX) Indicates sand filled module location and weight of sand in pounds for each module. Module spacing is based on the greater diameter of the module.
2. All sand weights are nominal.
3. The temporary crash cushion arrays shown on this plan shall be used only in locations where there will be traffic on one side of the temporary crash cushion array.
4. If the fixed object or approach end of the temporary railing is less than 15'-0" from the edge of traveled way, a temporary crash cushion is required in a construction or work zone.
5. Temporary crash cushion arrays shall not encroach on the traveled way.
6. Arrays for median shoulders shall conform to details shown on this plan for outside shoulders.
7. Place the Type P marker panel so that the bottom of the panel rests upon the pallet and faces traffic.
8. Refer to Standard Plan A73B for marker details.
9. For shoulder widths less than 8'-0", appropriate approved crash cushion protection, other than sand filled modules, shall be provided at fixed objects and at approach ends of temporary railing. The specific type of crash cushion shall be as shown on the project plans or as specified in the Special Provisions, or if not shown on the project plans or specified in the Special Provisions, shall be as approved by the Engineer.
10. Approach speeds indicated conform to NCHRP 350 Report criteria.
11. Use of pallets is optional.

STATE OF CALIFORNIA
DEPARTMENT OF TRANSPORTATION

TEMPORARY CRASH CUSHION, SAND FILLED (SHOULDER INSTALLATIONS)

NO SCALE

RSP T2 DATED JUNE 6, 2008 SUPERSEDES STANDARD PLAN T2
DATED MAY 1, 2006 - PAGE 213 OF THE STANDARD PLANS BOOK DATED MAY 2006.

REVISED STANDARD PLAN RSP T2

2006 REVISED STANDARD PLAN RSP T2

5-15-08

DIST	COUNTY	ROUTE	POST MILES TOTAL PROJECT	SHEET NO.	TOTAL SHEETS
03	ED	50	15.8/R28.8	7	9

REGISTERED CIVIL ENGINEER

October 5, 2007
PLANS APPROVAL DATE

REGISTERED PROFESSIONAL ENGINEER Efthymios Delis No. C51434 Exp. 6-30-08 CIVIL STATE OF CALIFORNIA

The State of California or its officers or agents shall not be responsible for the accuracy or completeness of electronic copies of this plan sheet.

To accompany plans dated 10-19-10

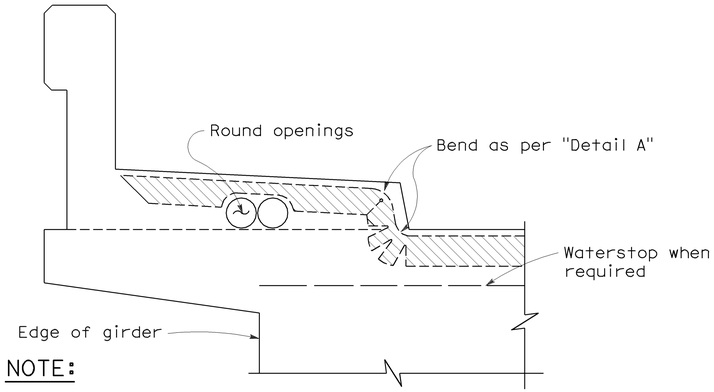

NOTE:

Type "B" seal shown. Type "A" seals to comform to the general path of seal shown, cuts for bending not required. Bend Type "A" seals 3" up into curb or barrier rail on only the low end of the seal.

CONCRETE BARRIER AND SIDEWALK

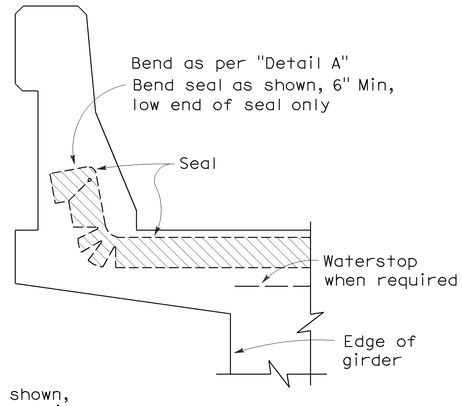

CONCRETE BARRIER

JOINT SEALS DETAILS

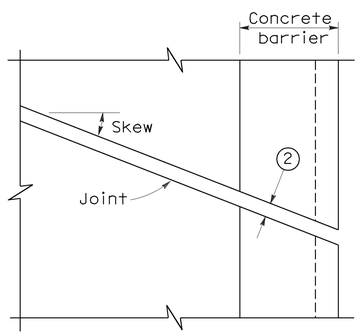

PLAN OF JOINT (SKEW ≤ 20°)

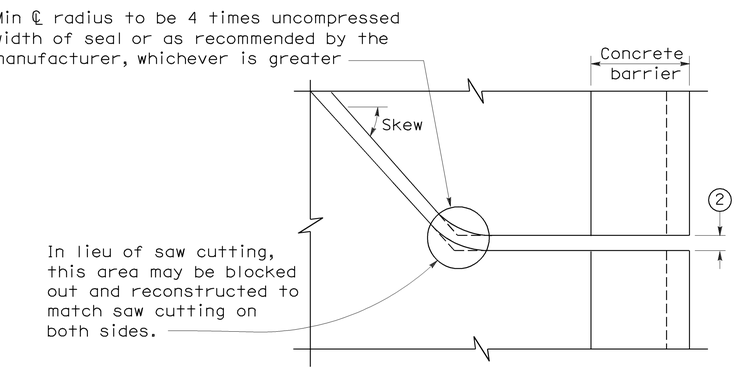

PLAN OF JOINT (SKEW > 20°)

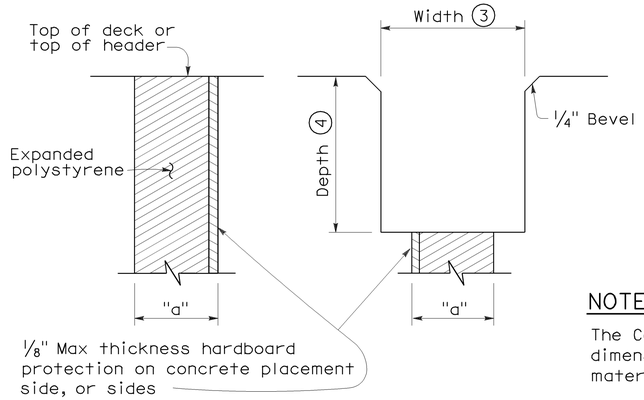

FORMING DETAIL SAWCUT DETAIL

NOTE:

The Contractor shall verify all controlling field dimensions before ordering or fabricatiing any material.

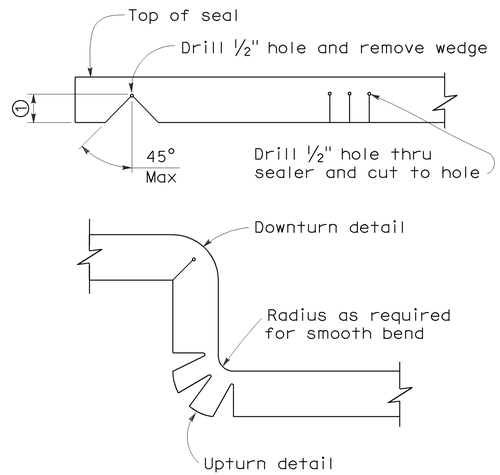

DETAIL A

NOTES:

1. Make smooth cuts from the bottom of seal to 1½" clear of top leaving at least one complete cell between the top of the cut and top of the seal. When necessary cut back of seal to clear conduit and round openings.
2. Opening in barrier to match width of sawn deck joint.
3. Sawcut groove widths shall be as ordered by the Engineer.
4. Depth of sawcut: Type A - Depth to be 2" minimum.
   Type B - Depth to be equal to or greater than the depth of seal measured along the contact surface, when compressed to minimum width position (W_2) plus dimensions shown.
5. MR (movement rating) as shown on other plan sheets.
6. Other depths must be approved by the Engineer.

DIMENSIONS "a" OF JOINT REQUIRED

Movement Rating (MR) 5	Bridge Type	"a" Dimension Deck Concrete Placed		
		Winter	Fall-Spring	Summer
2"	All except CIP/PS	1½"	1¼"	¾"
	CIP/PS	1¼"	1"	½"
1½"	All except CIP/PS	1¼"	1"	½"
	CIP/PS	1"	¾"	½"
1"	All except CIP/PS	1"	¾"	½"
	CIP/PS	¾"	½"	½"
½"	All except CIP/PS	¾"	¾"	½"
	CIP/PS	½"	½"	½"

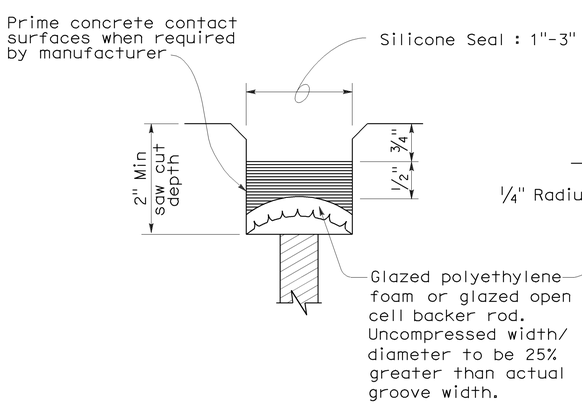

TYPE A SEAL

Movement rating : Silicone = 1" Max

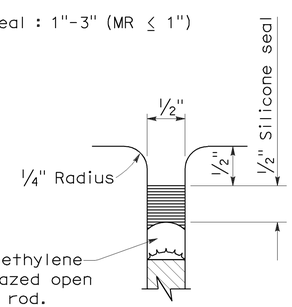

TYPE AL SEAL

Longitudinal joints only

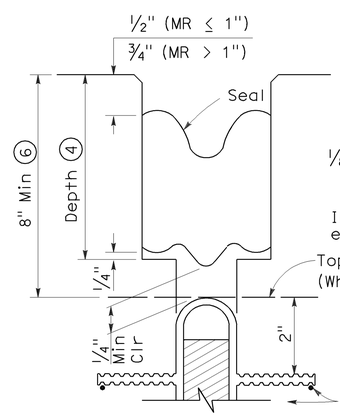

TYPE B JOINT SEAL
IN MINIMUM WIDTH POSITION (W_2)

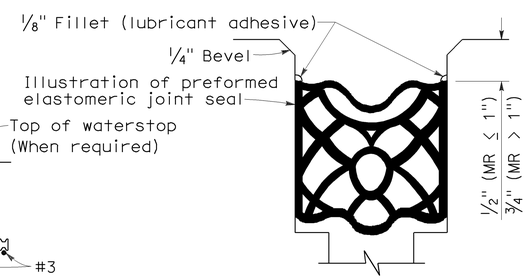

TYPE B SEAL

Movement Rating ≤ 2"

STATE OF CALIFORNIA
DEPARTMENT OF TRANSPORTATION

JOINT SEALS (MAXIMUM MOVEMENT RATING = 2")

NO SCALE

RSP B6-21 DATED OCTOBER 5, 2007 SUPERSEDES STANDARD PLAN B6-21 DATED MAY 1, 2006 - PAGE 258 OF THE STANDARD PLANS BOOK DATED MAY 2006.

REVISED STANDARD PLAN RSP B6-21

2006 REVISED STANDARD PLAN RSP B6-21

5-8-07

DIST	COUNTY	ROUTE	POST MILES TOTAL PROJECT	SHEET NO.	TOTAL SHEETS
03	ED	50	15.8/R28.8	8	9

Arlene Frank 8-9-10
REGISTERED CIVIL ENGINEER DATE

10-19-10
PLANS APPROVAL DATE

REGISTERED PROFESSIONAL ENGINEER ARLENE FRANK No. C 55562 Exp. 12-31-10 CIVIL STATE OF CALIFORNIA

THE STATE OF CALIFORNIA OR ITS OFFICERS OR AGENTS SHALL NOT BE RESPONSIBLE FOR THE ACCURACY OR COMPLETENESS OF ELECTRONIC COPIES OF THIS PLAN SHEET.

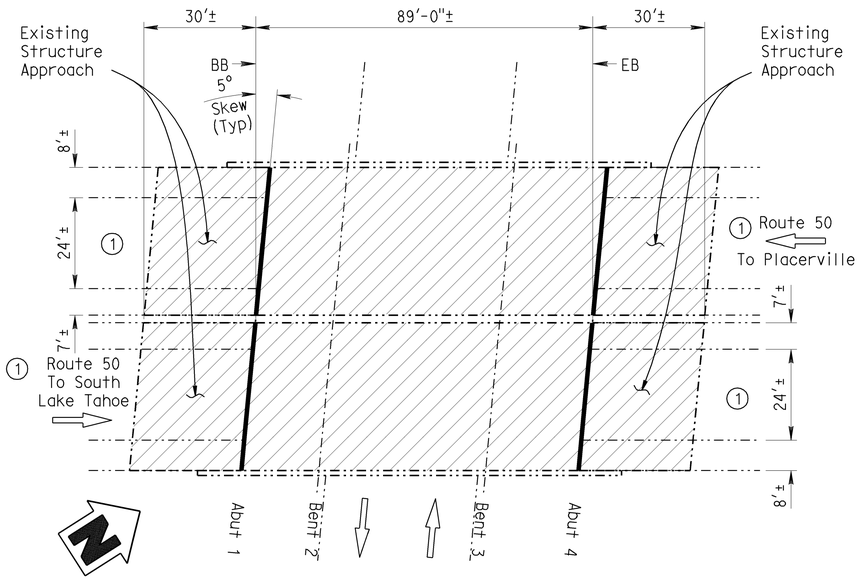

EAST CAMINO UNDERCROSSING

BR NO. 25-0040, ROUTE 50, PM R25.95
1' = 20'

EAST CAMINO UC BR NO.25-0040

QUANTITIES

REMOVE UNSOUND CONCRETE	30	CF
PREPARE CONCRETE BRIDGE DECK SURFACE	11,622	SQFT
CLEAN EXPANSION JOINT	158	LF
RAPID SETTING CONCRETE (PATCH)	30	CF
FURNISH POLYESTER CONCRETE OVERLAY	871	CF
PLACE POLYESTER CONCRETE OVERLAY	11,622	SQFT
JOINT SEAL (MR 1")	158	LF

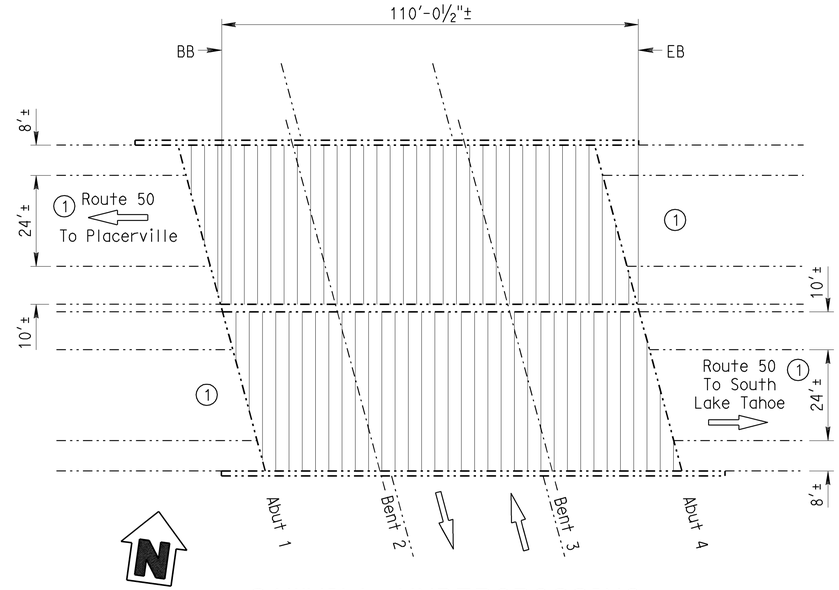

SAWMILL UNDERCROSSING

BR NO. 25-0041, ROUTE 50, PM R28.84
1' = 20'

SAWMILL UC BR NO.25-0041

QUANTITIES

REMOVE ASPHALT CONCRETE SURFACING	9,243	SQFT
REMOVE UNSOUND CONCRETE	120	CF
PREPARE CONCRETE BRIDGE DECK SURFACE	9,243	SQFT
RAPID SETTING CONCRETE (PATCH)	120	CF
FURNISH POLYESTER CONCRETE OVERLAY	693	CF
PLACE POLYESTER CONCRETE OVERLAY	9,243	SQFT

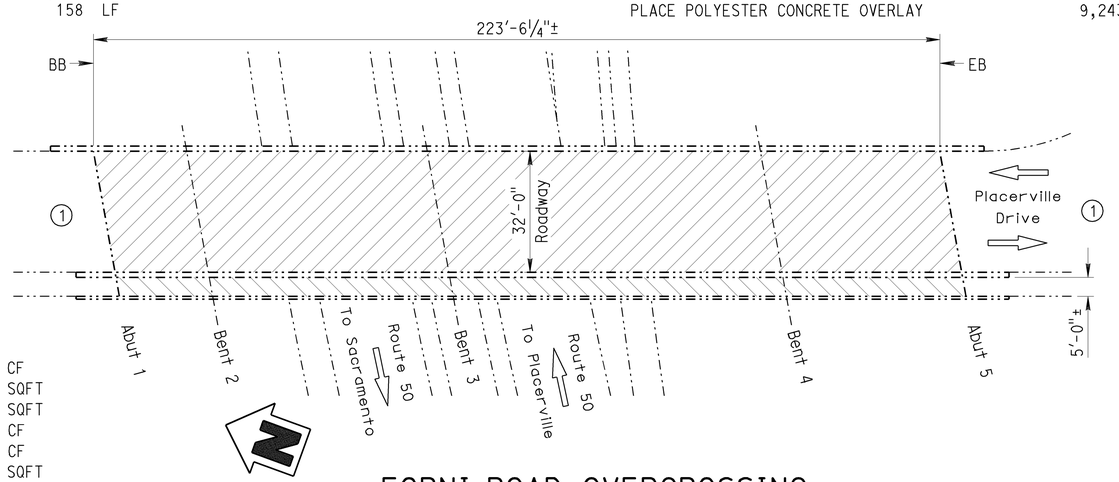

FORNI ROAD OC BR NO.25-0067

QUANTITIES

REMOVE UNSOUND CONCRETE	18	CF
PREPARE CONCRETE BRIDGE DECK SURFACE	7,152	SQFT
CLEAN BRIDGE DECK	1,117	SQFT
RAPID SETTING CONCRETE (PATCH)	18	CF
FURNISH POLYESTER CONCRETE OVERLAY	536	CF
PLACE POLYESTER CONCRETE OVERLAY	7,152	SQFT
TREAT BRIDGE DECK	1,117	SQFT
FURNISH BRIDGE DECK TREATMENT MATERIAL	13	GAL
PUBLIC SAFETY PLAN	LUMP SUM	

FORNI ROAD OVERCROSSING

BR NO. 25-0067, ROUTE 50, PM15.83
1' = 20'

NOTES: (APPLY TO ALL SHEETS)

Indicates existing structure.

THE CONTRACTOR SHALL VERIFY ALL CONTROLLING FIELD DIMENSIONS BEFORE ORDERING OR FABRICATING ANY MATERIAL.

STANDARD PLAN SHEET NUMBER
DETAIL NUMBER

NOTES: (APPLY TO THIS SHEET ONLY)

Indicates limits of prepare concrete bridge deck surface, furnish and place new ¾" minimum depth polyester concrete overlay. Prior to placing new polyester concrete overlay, remove unsound concrete and patch with rapid setting concrete as shown on "DECK REPAIR DETAIL-OVERLAY" on MISCELLANEOUS DETAILS sheet.

Indicates limits of remove existing 3" thick AC overlay and membrane seal, prepare concrete bridge deck surface, furnish and place new ¾" minimum depth polyester concrete overlay. Prior to placing new polyester concrete overlay, remove unsound concrete and patch with rapid setting concrete as shown on "DECK REPAIR DETAIL-OVERLAY" on MISCELLANEOUS DETAILS sheet.

Indicates limits of clean and treat bridge deck with high molecular weight methacrylate. Prior to treating bridge deck remove unsound concrete and patch with rapid setting concrete as shown on "DECK REPAIR DETAIL".

Indicates location of remove existing joint seal and place new joint seal. For details see MISCELLANEOUS DETAILS sheet.

(1) See "ROAD PLANS" for modification of existing AC surface to conform to new deck grade

INDEX TO PLANS

SHEET NO.	TITLE
1	GENERAL PLAN
2	MISCELLANEOUS DETAILS

STANDARD PLANS DATED MAY 2006

SHEET NO.	TITLE
A10A	ACRONYMS AND ABBREVIATIONS (SHEET 1 OF 2)
A10B	ACRONYMS AND ABBREVIATIONS (SHEET 2 OF 2)
RSP B6-21	JOINT SEALS (MAXIMUM MOVEMENT RATING = 2")

Matthew Rodgers 8-9-10
DESIGN ENGINEER

	BY	CHECKED
DESIGN	M. Furlong	J. Louie
DETAILS	B. Miller/N. Kelley	J. Louie
QUANTITIES	M. Furlong	J. Louie
LAYOUT	B. Miller	A. Frank
SPECIFICATIONS	Erwin Rufino	PLANS AND SPECIFICATIONS COMPARED: Erwin Rufino

STATE OF CALIFORNIA
DEPARTMENT OF TRANSPORTATION

DIVISION OF MAINTENANCE
STRUCTURE MAINTENANCE DESIGN

BRIDGE NO. VARIOUS
POST MILE VARIES

ROUTE 50 BRIDGES
GENERAL PLAN

STRUCTURES MAINTENANCE GENERAL PLAN & DETAIL SHEET (ENGLISH) (REV. 10/17/07)

ORIGINAL SCALE IN INCHES FOR REDUCED PLANS 0 1 2 3

CU 03604
EA 3M6501

DISREGARD PRINTS BEARING EARLIER REVISION DATES

REVISION DATES: ~~5-6-09~~ ~~10-7-09~~ ~~2-23-10~~ ~~8-04-10~~ 8-09-10

SHEET 1 OF 2

FILE => 03-3m6501_01gp.dgn

USERNAME => s128033 DATE PLOTTED => 20-OCT-2010 TIME PLOTTED => 15:02

DIST	COUNTY	ROUTE	POST MILES TOTAL PROJECT	SHEET NO.	TOTAL SHEETS
03	ED	50	15.8/R28.8	9	9

REGISTERED CIVIL ENGINEER 8-9-10 DATE

10-19-10
PLANS APPROVAL DATE

REGISTERED PROFESSIONAL ENGINEER ARLENE FRANK No. C 55562 Exp. 12-31-10 CIVIL STATE OF CALIFORNIA

THE STATE OF CALIFORNIA OR ITS OFFICERS OR AGENTS SHALL NOT BE RESPONSIBLE FOR THE ACCURACY OR COMPLETENESS OF ELECTRONIC COPIES OF THIS PLAN SHEET.

JOINT SEAL TABLE

BRIDGE NAME	BRIDGE NUMBER	LOCATION		MINIMUM "MR" (inches)	APPROXIMATE LENGTH (feet)	EXISTING WATERSTOP	APPROX DEPTH TO CLEAN EXPANSION JOINT (inches)
EAST CAMINO UNDERCROSSING	25-0040	Abut 1	PN	1	80	No	12.0
		Abut 4	PN	1	80	No	12.0

LEGEND:
PN = PAVING NOTCH

NOTE: ALL JOINT SEALS TO BE TYPE B

The following notes apply to JOINT SEAL TYPE B:

1) Seal must satisfy both minimum Movement Rating (MR) and minimum W1 requirements.

2) Minimum W1 is the calculated maximum width of the joint based on field measurements. After the joints have been cleaned, minimum W1 is to be calculated by the Engineer.

3) W1 shall be the smaller of the values determined as follows:

   A) 0.85 times the manufacturer's designed minimum uncompressed width of the seal.

   B) The width of the seal on the third successive test cycle of the pressure deflection test, when compressed to an average pressure of 3 psi.

4) Bend Type B joint seal 6" up into curb or rail on the low side of the deck where deck joint matches curb or rail joint.

5) For details not shown see RSP B6-21

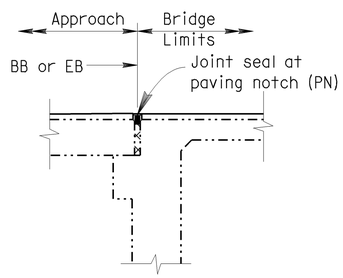

PAVING NOTCH

JOINT SEAL LOCATION

NO SCALE

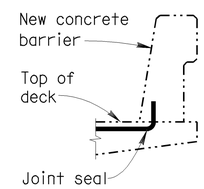

JOINT SEAL AT LOW SIDE OF DECK

Details shown for illustration purposes only.
For use only where deck joint matches the barrier rail joint.
NO SCALE

DECK REPAIR TABLE

Remove unsound concrete and place rapid setting concrete (patch).
Locations to be determined by the Engineer.

BRIDGE NAME	BRIDGE NUMBER	APPROXIMATE AREA DAMAGED (PERCENT)	APPROXIMATE DEPTH (INCHES)
EAST CAMINO UNDERCROSSING	25-0040	1	3
SAWMILL UNDERCROSSING	25-0041	5	3
FORNI ROAD OVERCROSSING	25-0067	1	3

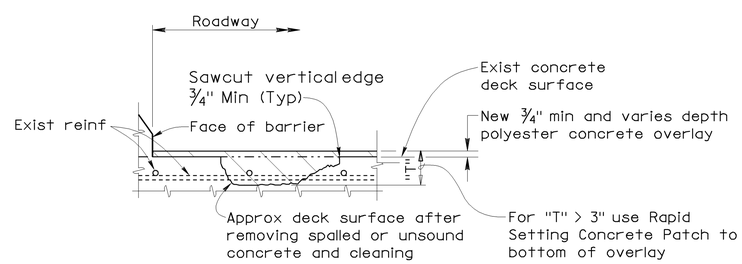

DECK REPAIR DETAIL-OVERLAY

Note: Reinforcement may be encountered during deck concrete removal.

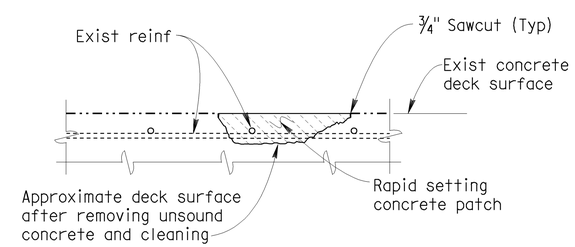

DECK REPAIR DETAIL

Reinforcement may be encountered during deck concrete removal.
NO SCALE

DESIGN	BY M. Furlong	CHECKED J. Louie	
DETAILS	BY B. Miller/N. Kelley	CHECKED J. Louie	
QUANTITIES	BY M. Furlong	CHECKED J. Louie	

STATE OF CALIFORNIA
DEPARTMENT OF TRANSPORTATION

DIVISION OF MAINTENANCE
STRUCTURE MAINTENANCE DESIGN

BRIDGE NO. VARIOUS
POST MILE VARIES

ROUTE 50 BRIDGES
MISCELLANEOUS DETAILS

STRUCTURES MAINTENANCE GENERAL PLAN & DETAIL SHEET (ENGLISH) (REV. 10/17/07)

ORIGINAL SCALE IN INCHES FOR REDUCED PLANS 0 1 2 3

CU 03604
EA 3M6501

DISREGARD PRINTS BEARING EARLIER REVISION DATES

REVISION DATES: 5-6-09 10-7-09 2-22-10 8-9-10

SHEET 2 OF 2

FILE => 03-3m6501_02det_misc.dgn

USERNAME => s128033 DATE PLOTTED => 20-OCT-2010 TIME PLOTTED => 15:02