Dist	COUNTY	ROUTE	POST MILES TOTAL PROJECT	SHEET No.	TOTAL SHEETS
03	ED	50	56.3/58.4	1	23

INDEX OF PLANS

DESCREPTION

1	TITLE AND LOCATION MAP
2	TEMPORARY WATER POLLUTION CONTROL DETAILS
3-17	DRAINAGE PROFILES, DETAILS AND QUANTITIES
18	LANDSCAPE DETAILS
19-23	REVISED STANDARD PLAN

THE STANDARD PLANS LIST APPLICABLE TO THIS COTRACT IS INCLUDED THE NOTICE TO BIDDERS AND SPECIAL PROVISIONS BOOK.

STATE OF CALIFORNIA

DEPARTMENT OF TRANSPORTATION

PROJECT PLANS FOR CONSTRUCTION ON

STATE HIGHWAY

IN EL DORADO COUNTY
AT VARIOUS LOCATIONS
FROM 3.6 MILES WEST OF TWIN BRIDGES ROAD
TO 2.0 MILES WEST OF TWIN BRIDGES ROAD

TO BE SUPPLEMENTED BY STANDARD PLANS DATED MAY 2006

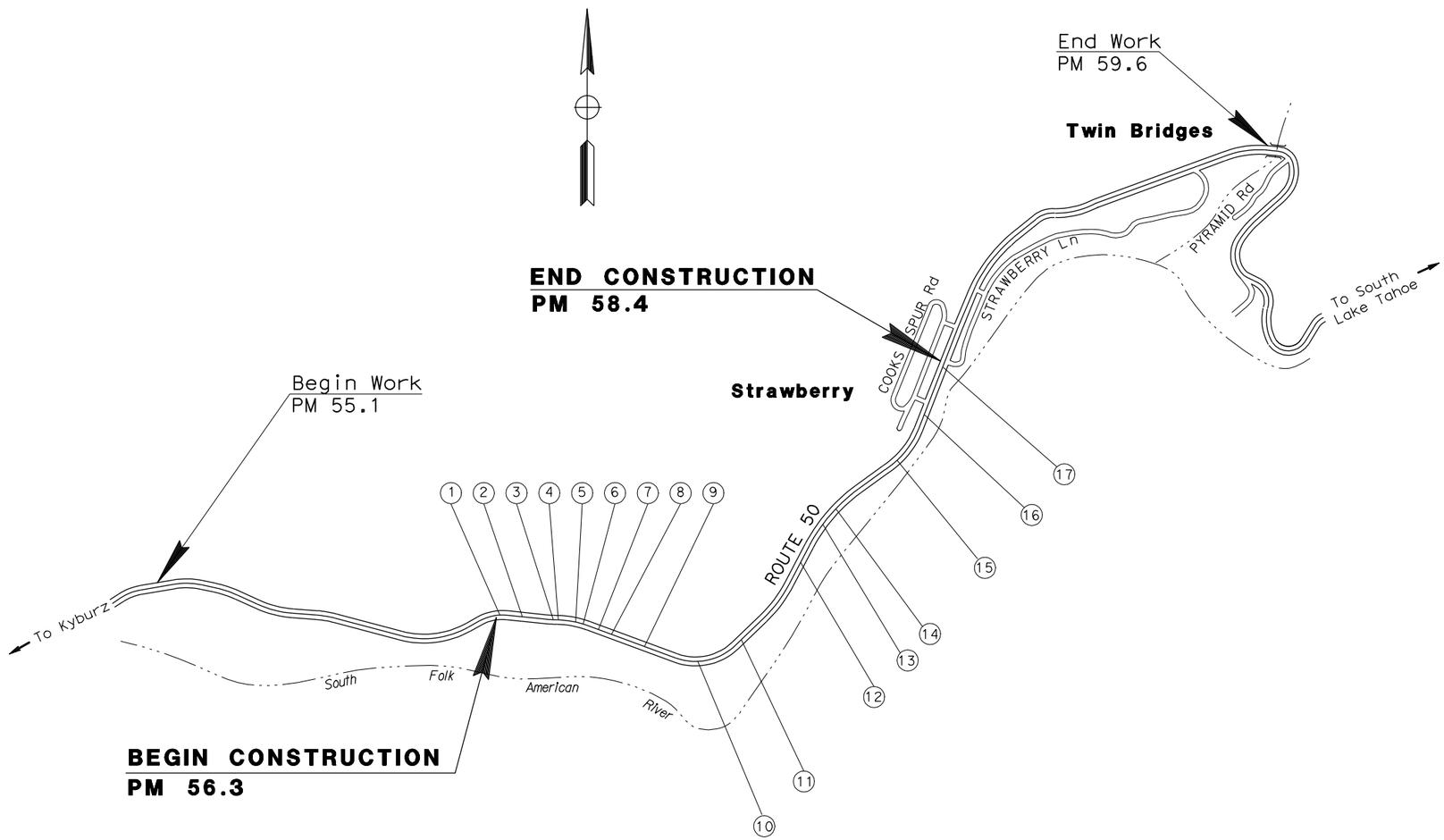

NO SCALE

LOCATIONS OF CONSTRUCTION

LOCATION	COUNTY	ROUTE	POST MILE
1	ED	50	56.31
2	ED	50	56.34
3	ED	50	56.38
4	ED	50	56.53
5	ED	50	56.57
6	ED	50	56.60
7	ED	50	56.66
8	ED	50	56.71
9	ED	50	56.83
10	ED	50	57.00
11	ED	50	57.19
12	ED	50	57.52
13	ED	50	57.68
14	ED	50	57.73
15	ED	50	57.98
16	ED	50	58.19
17	ED	50	58.36

Dan Walker 11-12-10
PROJECT ENGINEER DATE
REGISTERED CIVIL ENGINEER

January 4, 2011
PLANS APPROVAL DATE

REGISTERED PROFESSIONAL ENGINEER
DAN WALKER
No. C41224
Exp. 3-31-11
CIVIL
STATE OF CALIFORNIA

THE STATE OF CALIFORNIA OR ITS OFFICERS OR AGENTS SHALL NOT BE RESPONSIBLE FOR THE ACCURACY OR COMPLETENESS OF SCANNED COPIES OF THIS PLAN SHEET.

PROJECT MANAGER PAT KELLEY

DESIGN ENGINEER PAT KELLEY

THE CONTRACTOR SHALL POSSESS THE CLASS (OR CLASSES) OF LICENSE AS SPECIFIED IN THE "NOTICE TO BIDDERS."

CONTRACT No.	03-3M7704
PROJECT ID	0300000599

LAST REVISION 07-28-10

DATE PLOTTED => 13-JAN-2011
TIME PLOTTED => 12:54

Dist	COUNTY	ROUTE	POST MILES TOTAL PROJECT	SHEET No.	TOTAL SHEETS
03	ED	50	56.3/58.4	2	23

REGISTERED CIVIL ENGINEER 11-12-11 DATE

1-4-11
PLANS APPROVAL DATE

REGISTERED PROFESSIONAL ENGINEER DAN WALKER No. C41224 Exp. 3-31-11 CIVIL STATE OF CALIFORNIA

THE STATE OF CALIFORNIA OR ITS OFFICERS OR AGENTS SHALL NOT BE RESPONSIBLE FOR THE ACCURACY OR COMPLETENESS OF SCANNED COPIES OF THIS PLAN SHEET.

NOTES

1. EXACT LENGTH AND LOCATION OF THE PLASTIC PIPE TO BE DETERMINED IN THE FIELD BY THE ENGINEER.
2. GRAVEL-FILLED BAG ANCHORS TO BE PLACED AT INTERMEDIATE LOCATIONS AS DETERMINED BY ENGINEER.
3. USE FLEXIBLE PIPE OR RIGID PIPE WITH WATER TIGHT JOINTS AS NECESSARY TO FOLLOW CULVERT OR ROAD SIDE DITCH ALIGNMENT.

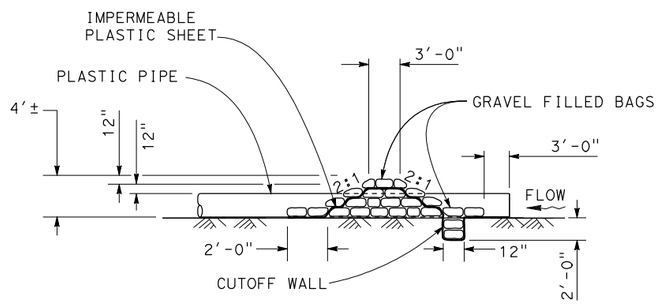

SECTION A-A

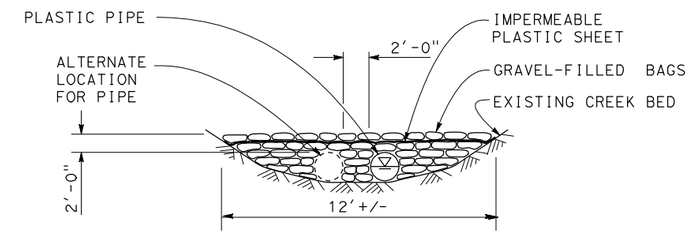

SECTION B-B

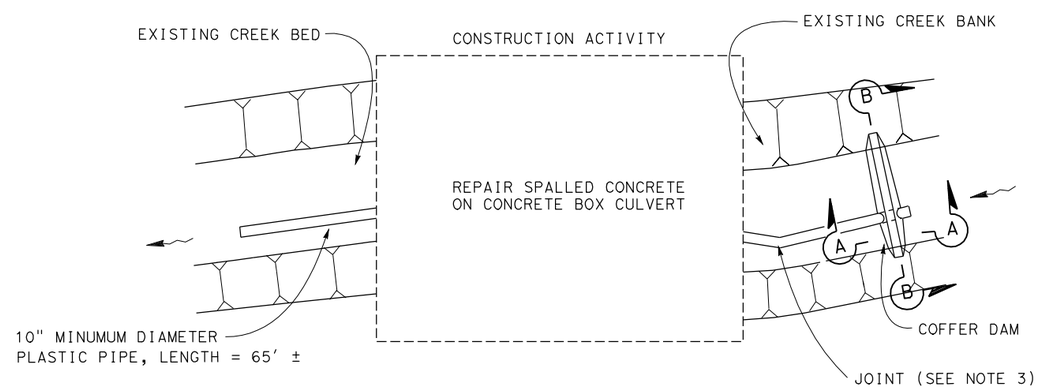

PLAN

TEMPORARY CREEK DIVERSION SYSTEM AT Loc 3
PM 56.38 (FORNI CREEK)

TEMPORARY WATER POLLUTION CONTROL DETAILS (TEMPORARY CREEK DIVERSION SYSTEM)
NO SCALE

WPC-1

STATE OF CALIFORNIA - DEPARTMENT OF TRANSPORTATION
Caltrans® **MAINTENANCE**

FUNCTIONAL SUPERVISOR: PAT KELLEY
CALCULATED-DESIGNED BY / CHECKED BY
NIK BEACH / DAN WALKER
REVISED BY / DATE REVISED

LAST REVISION 00-00-00 | DATE PLOTTED => 13-JAN-2011 | TIME PLOTTED => 12:54

Dist	COUNTY	ROUTE	POST MILES TOTAL PROJECT	SHEET No.	TOTAL SHEETS
03	ED	50	56.3/58.4	3	23

Dan Walker 11-12-11
REGISTERED CIVIL ENGINEER DATE

1-4-11
PLANS APPROVAL DATE

REGISTERED PROFESSIONAL ENGINEER DAN WALKER No. C41224 Exp. 3-31-11 CIVIL STATE OF CALIFORNIA

THE STATE OF CALIFORNIA OR ITS OFFICERS OR AGENTS SHALL NOT BE RESPONSIBLE FOR THE ACCURACY OR COMPLETENESS OF SCANNED COPIES OF THIS PLAN SHEET.

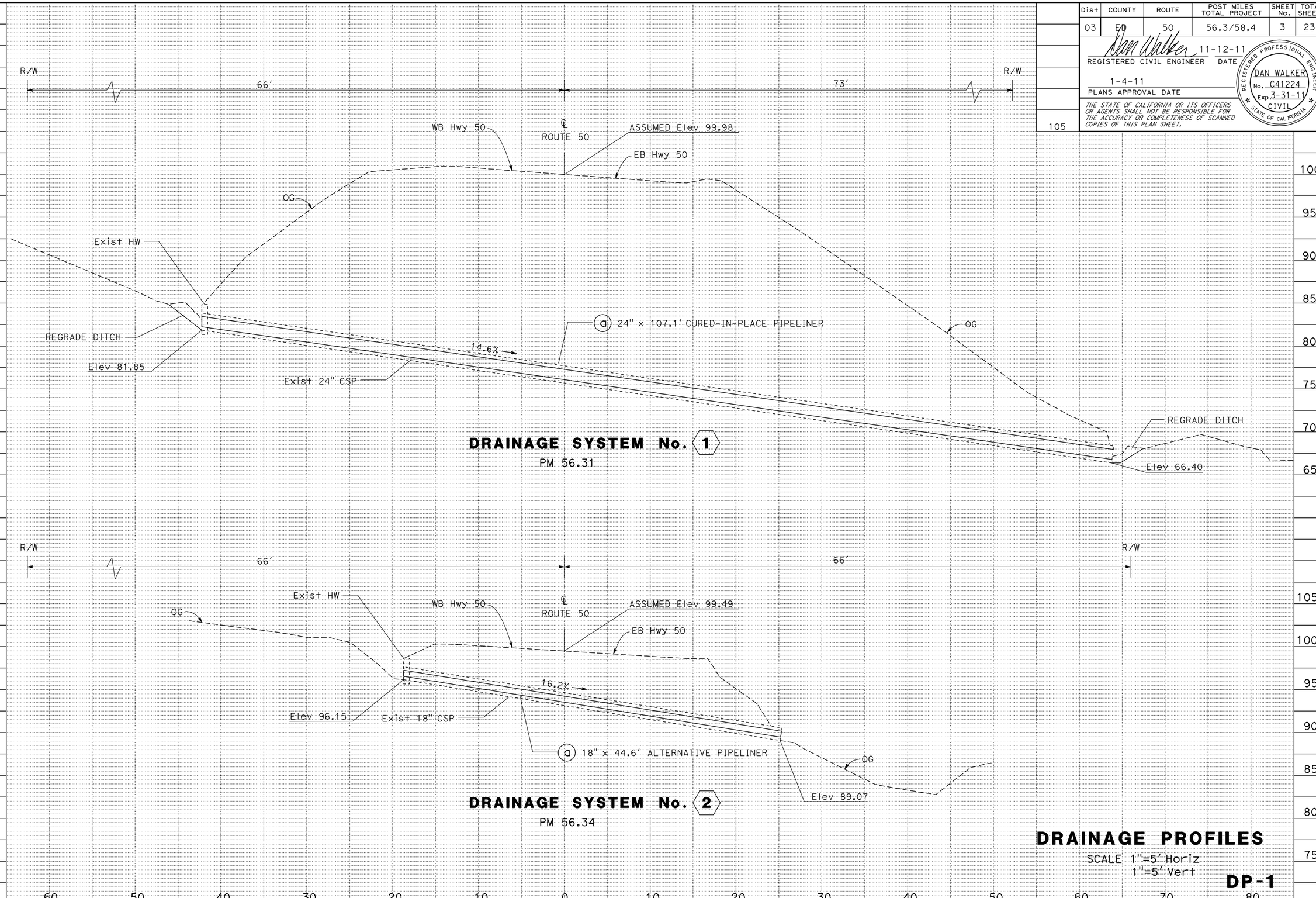

DRAINAGE PROFILES

SCALE 1"=5' Horiz
1"=5' Vert

DP-1

REVISED BY	DATE REVISED
NIK BEACH	DAN WALKER
CALCULATED-DESIGNED BY	CHECKED BY
FUNCTIONAL SUPERVISOR	PAT KELLEY

STATE OF CALIFORNIA - DEPARTMENT OF TRANSPORTATION
Caltrans® **MAINTENANCE**

LAST REVISION 00-00-00 | DATE PLOTTED => 13-JAN-2011 | TIME PLOTTED => 12:54

Dist	COUNTY	ROUTE	POST MILES TOTAL PROJECT	SHEET No.	TOTAL SHEETS
03	ED	50	56.3/58.4	4	23

REGISTERED CIVIL ENGINEER 11-12-11 DATE

1-4-11
PLANS APPROVAL DATE

REGISTERED PROFESSIONAL ENGINEER DAN WALKER No. C41224 Exp. 3-31-11 CIVIL STATE OF CALIFORNIA

THE STATE OF CALIFORNIA OR ITS OFFICERS OR AGENTS SHALL NOT BE RESPONSIBLE FOR THE ACCURACY OR COMPLETENESS OF SCANNED COPIES OF THIS PLAN SHEET.

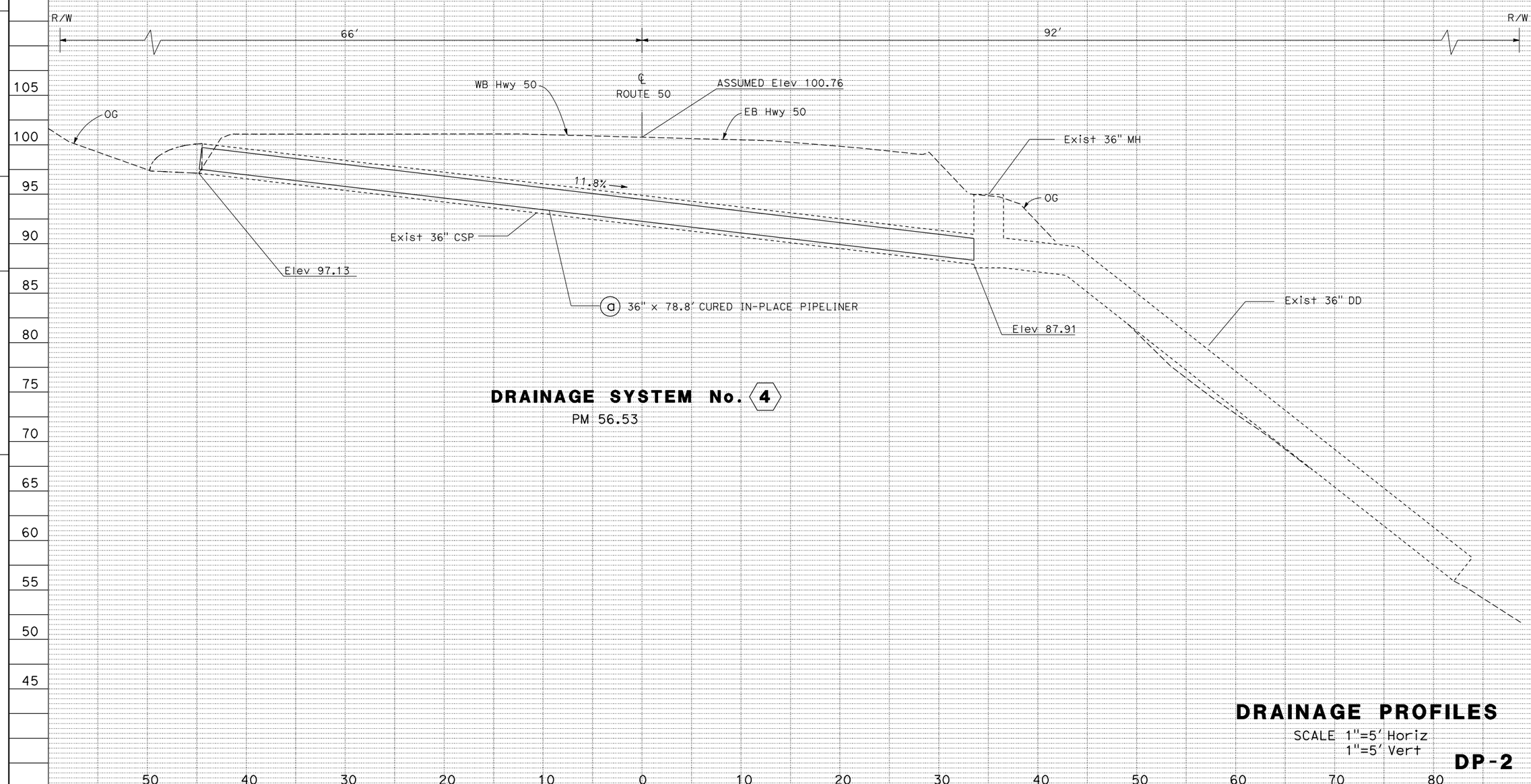

DRAINAGE PROFILES

SCALE 1"=5' Horiz
1"=5' Vert

DP-2

REVISED BY	DATE REVISED
NIK BEACH	DAN WALKER
CALCULATED-DESIGNED BY	CHECKED BY
FUNCTIONAL SUPERVISOR	PAT KELLEY

STATE OF CALIFORNIA - DEPARTMENT OF TRANSPORTATION
Caltrans® **MAINTENANCE**

LAST REVISION 00-00-00 | DATE PLOTTED => 13-JAN-2011 | TIME PLOTTED => 12:54

Dist	COUNTY	ROUTE	POST MILES TOTAL PROJECT	SHEET No.	TOTAL SHEETS
03	ED	50	56.3/58.4	5	23

REGISTERED CIVIL ENGINEER 11-12-11 DATE

1-4-11
PLANS APPROVAL DATE

REGISTERED PROFESSIONAL ENGINEER DAN WALKER No. C41224 Exp. 3-31-11 CIVIL STATE OF CALIFORNIA

THE STATE OF CALIFORNIA OR ITS OFFICERS OR AGENTS SHALL NOT BE RESPONSIBLE FOR THE ACCURACY OR COMPLETENESS OF SCANNED COPIES OF THIS PLAN SHEET.

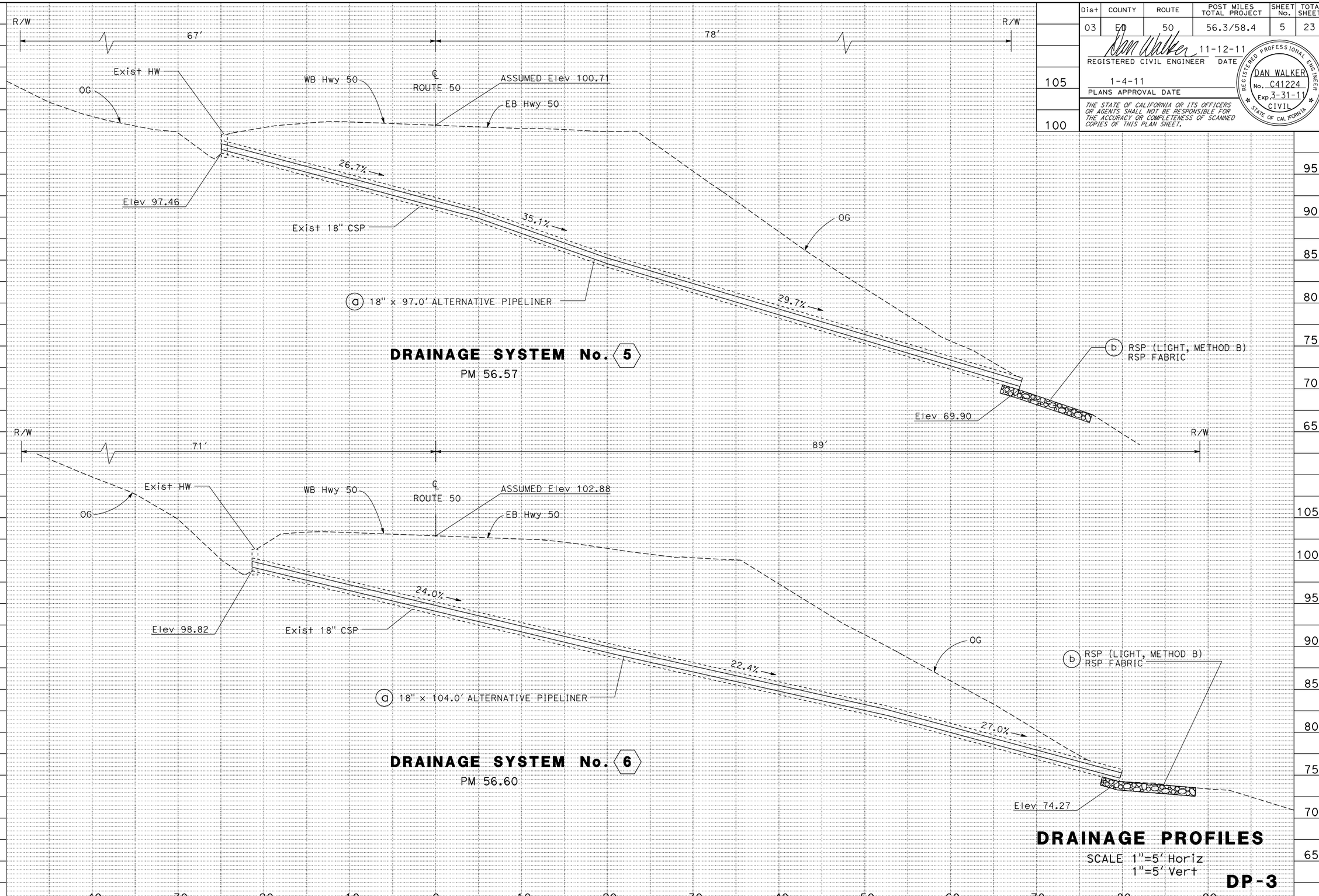

DRAINAGE PROFILES

SCALE 1"=5' Horiz
1"=5' Vert

DP-3

REVISED BY | DATE REVISED
NIK BEACH | DAN WALKER
CALCULATED-DESIGNED BY | CHECKED BY
FUNCTIONAL SUPERVISOR | PAT KELLEY
STATE OF CALIFORNIA - DEPARTMENT OF TRANSPORTATION
Caltrans® MAINTENANCE

LAST REVISION 00-00-00 | DATE PLOTTED => 13-JAN-2011 | TIME PLOTTED => 12:54

Dist	COUNTY	ROUTE	POST MILES TOTAL PROJECT	SHEET No.	TOTAL SHEETS
03	ED	50	56.3/58.4	6	23

REGISTERED CIVIL ENGINEER 11-12-11 DATE

1-4-11
PLANS APPROVAL DATE

REGISTERED PROFESSIONAL ENGINEER DAN WALKER No. C41224 Exp. 3-31-11 CIVIL STATE OF CALIFORNIA

THE STATE OF CALIFORNIA OR ITS OFFICERS OR AGENTS SHALL NOT BE RESPONSIBLE FOR THE ACCURACY OR COMPLETENESS OF SCANNED COPIES OF THIS PLAN SHEET.

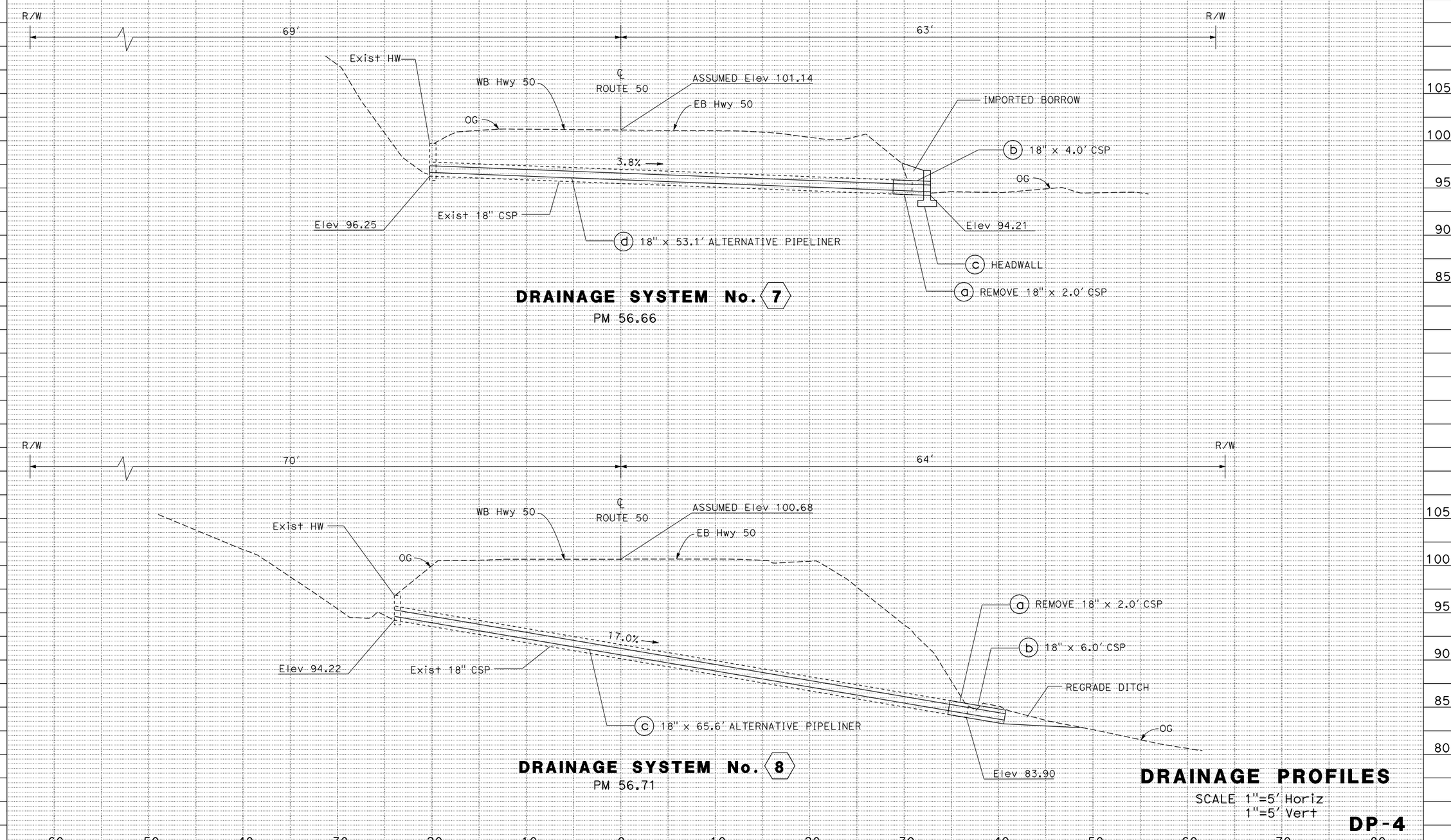

DRAINAGE PROFILES

SCALE 1"=5' Horiz
1"=5' Vert

DP-4

REVISED BY	DATE REVISED
NIK BEACH	DAN WALKER
CALCULATED-DESIGNED BY	CHECKED BY
FUNCTIONAL SUPERVISOR	PAT KELLEY

STATE OF CALIFORNIA - DEPARTMENT OF TRANSPORTATION
Caltrans® **MAINTENANCE**

LAST REVISION 00-00-00 DATE PLOTTED => 13-JAN-2011 TIME PLOTTED => 12:54

Dist	COUNTY	ROUTE	POST MILES TOTAL PROJECT	SHEET No.	TOTAL SHEETS
03	ED	50	56.3/58.4	7	23

REGISTERED CIVIL ENGINEER 11-12-11 DATE

1-4-11
PLANS APPROVAL DATE

REGISTERED PROFESSIONAL ENGINEER DAN WALKER No. C41224 Exp. 3-31-11 CIVIL STATE OF CALIFORNIA

THE STATE OF CALIFORNIA OR ITS OFFICERS OR AGENTS SHALL NOT BE RESPONSIBLE FOR THE ACCURACY OR COMPLETENESS OF SCANNED COPIES OF THIS PLAN SHEET.

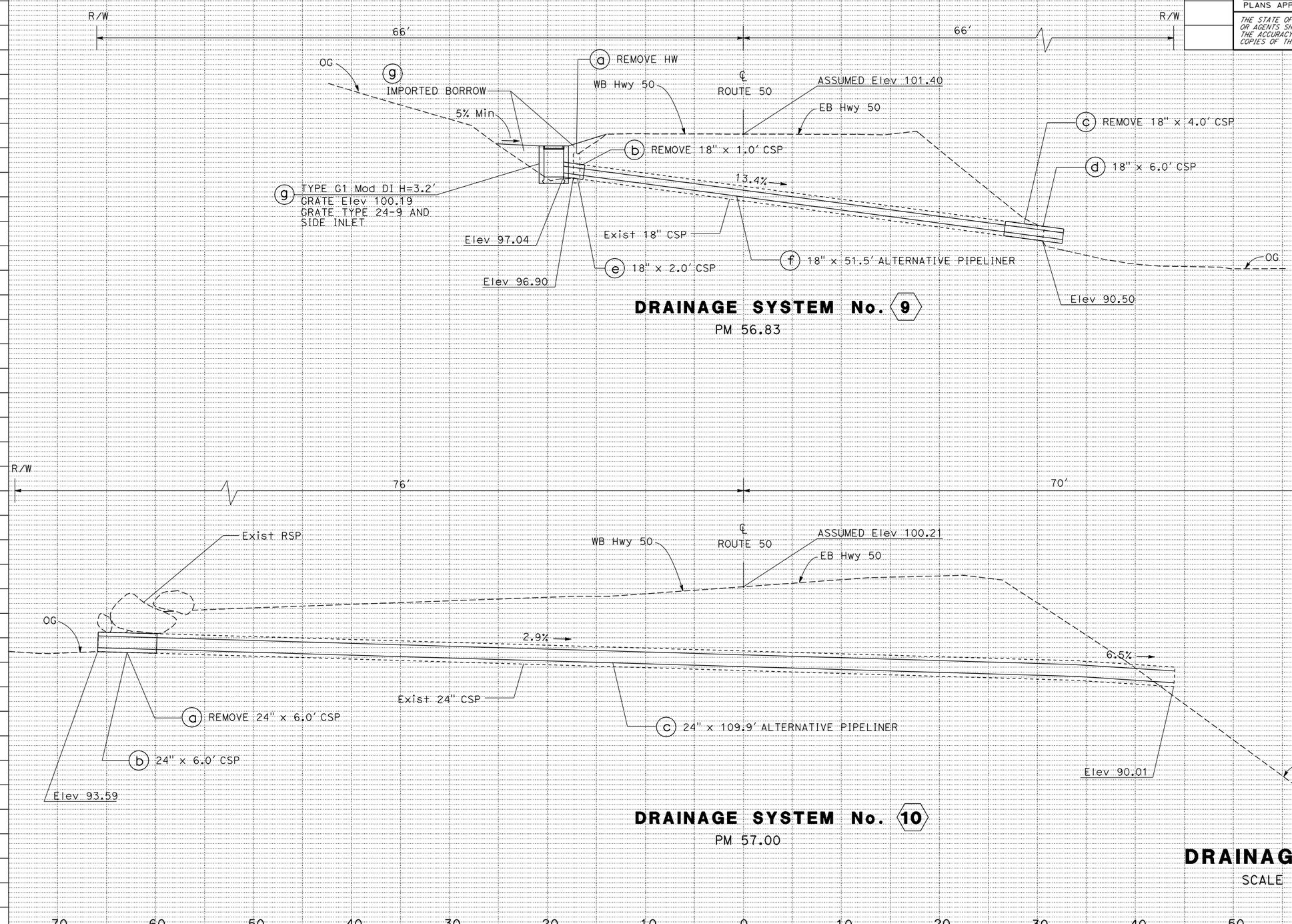

DRAINAGE SYSTEM No. 9
PM 56.83

DRAINAGE SYSTEM No. 10
PM 57.00

DRAINAGE PROFILES

SCALE 1"=5′ Horiz
1"=5′ Vert

DP-5

STATE OF CALIFORNIA - DEPARTMENT OF TRANSPORTATION
Caltrans® **MAINTENANCE**

FUNCTIONAL SUPERVISOR: PAT KELLEY
CALCULATED-DESIGNED BY / CHECKED BY
NIK BEACH / DAN WALKER
REVISED BY / DATE REVISED

LAST REVISION 00-00-00
DATE PLOTTED => 13-JAN-2011
TIME PLOTTED => 12:54

Dist	COUNTY	ROUTE	POST MILES TOTAL PROJECT	SHEET No.	TOTAL SHEETS
03	ED	50	56.3/58.4	8	23

REGISTERED CIVIL ENGINEER 11-12-11 DATE

1-4-11
PLANS APPROVAL DATE

REGISTERED PROFESSIONAL ENGINEER DAN WALKER No. C41224 Exp. 3-31-11 CIVIL STATE OF CALIFORNIA

THE STATE OF CALIFORNIA OR ITS OFFICERS OR AGENTS SHALL NOT BE RESPONSIBLE FOR THE ACCURACY OR COMPLETENESS OF SCANNED COPIES OF THIS PLAN SHEET.

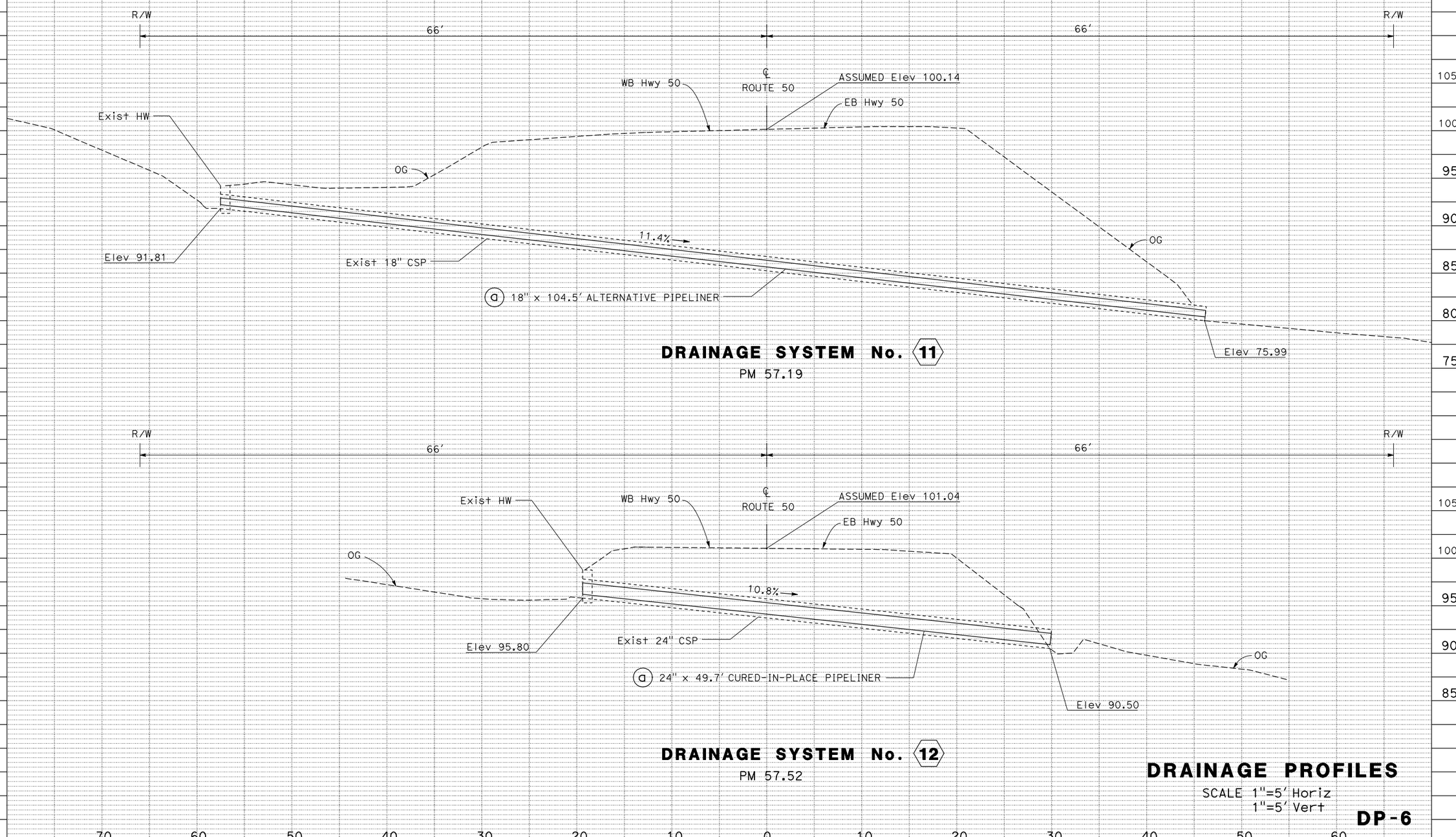

DRAINAGE PROFILES

SCALE 1"=5' Horiz
1"=5' Vert

DP-6

REVISED BY	DATE REVISED
NIK BEACH	DAN WALKER
CALCULATED-DESIGNED BY	CHECKED BY
FUNCTIONAL SUPERVISOR	PAT KELLEY

STATE OF CALIFORNIA - DEPARTMENT OF TRANSPORTATION
Caltrans® **MAINTENANCE**

LAST REVISION 00-00-00 | DATE PLOTTED => 13-JAN-2011 | TIME PLOTTED => 12:54

Dist	COUNTY	ROUTE	POST MILES TOTAL PROJECT	SHEET No.	TOTAL SHEETS
03	ED	50	56.3/58.4	9	23

REGISTERED CIVIL ENGINEER 11-12-11 DATE

1-4-11
PLANS APPROVAL DATE

REGISTERED PROFESSIONAL ENGINEER DAN WALKER No. C41224 Exp. 3-31-11 CIVIL STATE OF CALIFORNIA

THE STATE OF CALIFORNIA OR ITS OFFICERS OR AGENTS SHALL NOT BE RESPONSIBLE FOR THE ACCURACY OR COMPLETENESS OF SCANNED COPIES OF THIS PLAN SHEET.

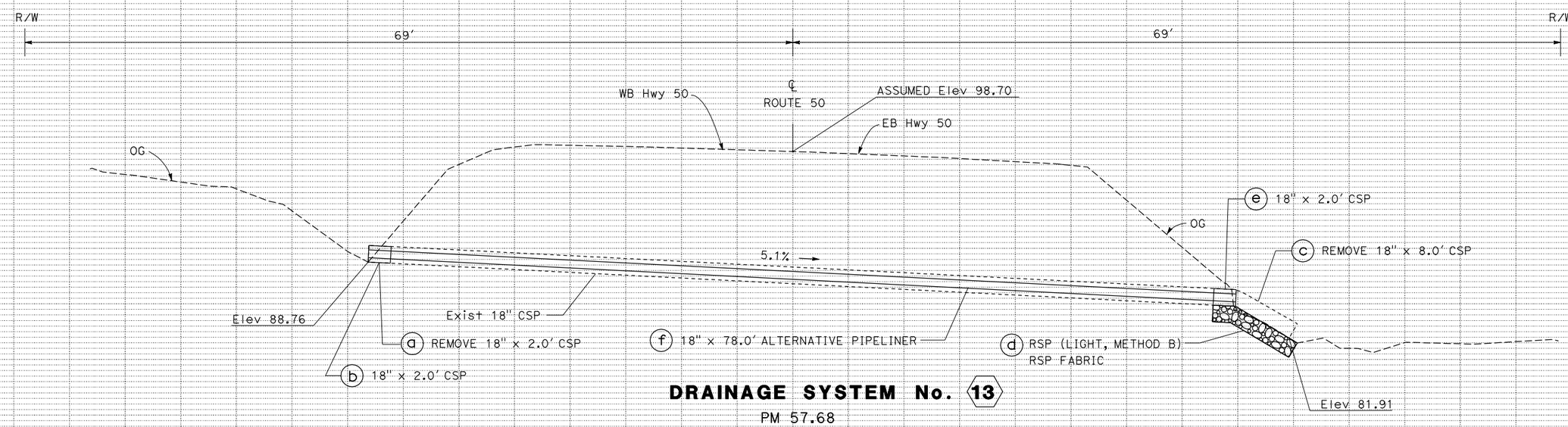

DRAINAGE SYSTEM No. 13

PM 57.68

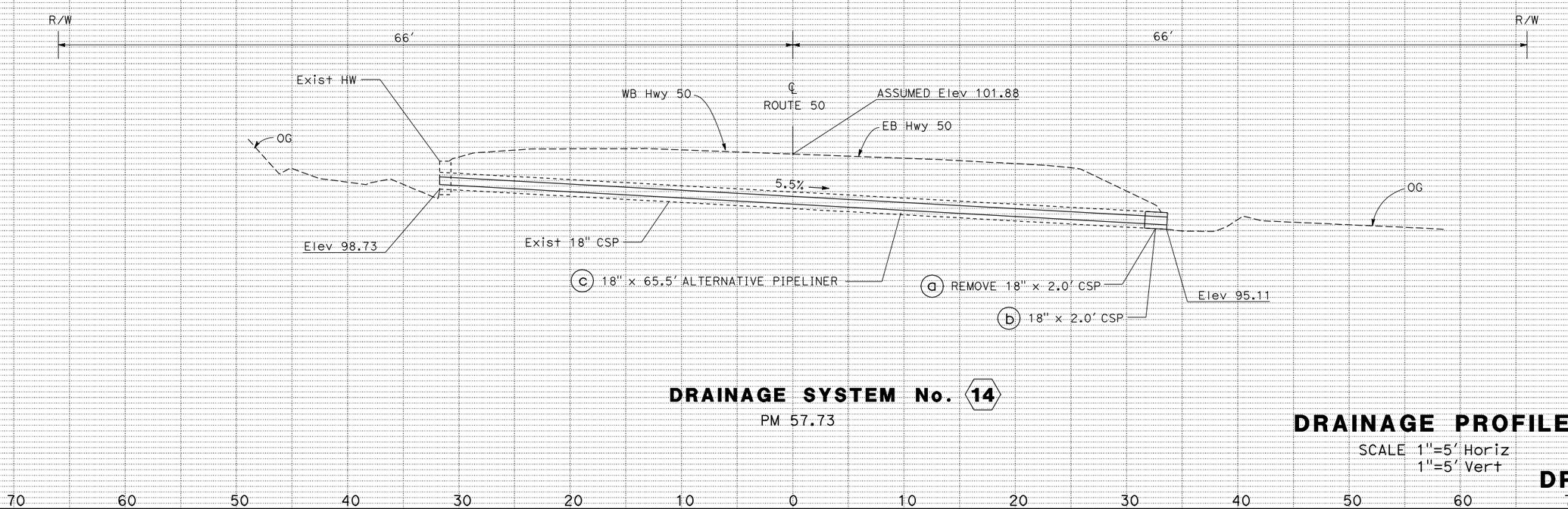

DRAINAGE SYSTEM No. 14

PM 57.73

70 60 50 40 30 20 10 0 10 20 30 40 50 60 70

DRAINAGE PROFILES

SCALE 1"=5' Horiz
1"=5' Vert

DP-7

STATE OF CALIFORNIA - DEPARTMENT OF TRANSPORTATION
Caltrans® **MAINTENANCE**

FUNCTIONAL SUPERVISOR: PAT KELLEY

CALCULATED-DESIGNED BY: NIK BEACH
CHECKED BY: DAN WALKER

REVISED BY | DATE REVISED

LAST REVISION 00-00-00 | DATE PLOTTED => 13-JAN-2011 | TIME PLOTTED => 12:55

Dist	COUNTY	ROUTE	POST MILES TOTAL PROJECT	SHEET No.	TOTAL SHEETS
03	ED	50	56.3/58.4	10	23

REGISTERED CIVIL ENGINEER 11-12-11 DATE

1-4-11
PLANS APPROVAL DATE

REGISTERED PROFESSIONAL ENGINEER DAN WALKER No. C41224 Exp. 3-31-11 CIVIL STATE OF CALIFORNIA

THE STATE OF CALIFORNIA OR ITS OFFICERS OR AGENTS SHALL NOT BE RESPONSIBLE FOR THE ACCURACY OR COMPLETENESS OF SCANNED COPIES OF THIS PLAN SHEET.

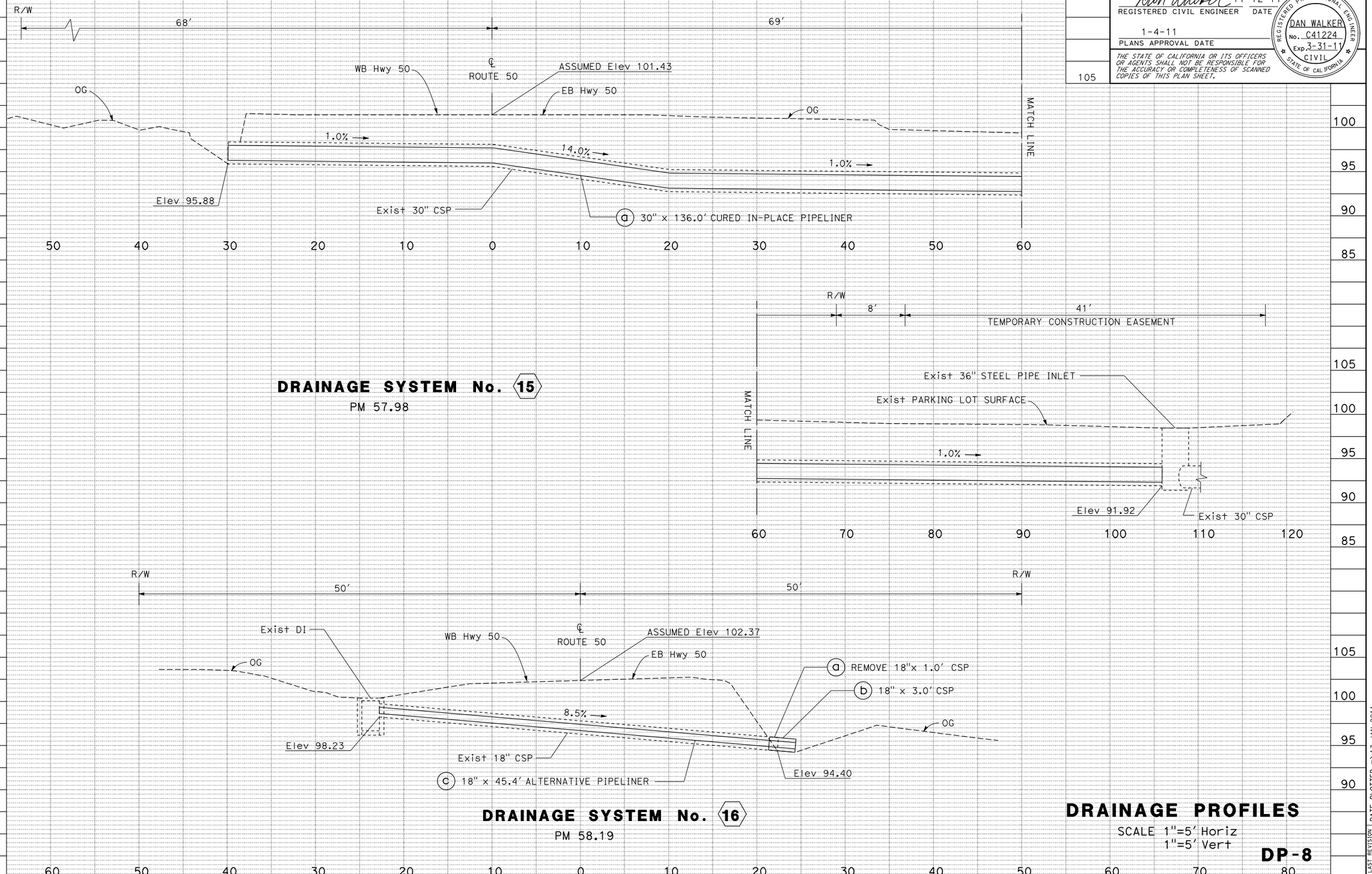

DRAINAGE SYSTEM No. 15
PM 57.98

DRAINAGE SYSTEM No. 16
PM 58.19

DRAINAGE PROFILES
SCALE 1"=5' Horiz
1"=5' Vert

DP-8

REVISED BY	DATE REVISED
NIK BEACH	DAN WALKER
CALCULATED-DESIGNED BY	CHECKED BY
FUNCTIONAL SUPERVISOR	PAT KELLEY

STATE OF CALIFORNIA - DEPARTMENT OF TRANSPORTATION
Caltrans® **MAINTENANCE**

LAST REVISION 00-00-00 DATE PLOTTED => 13-JAN-2011 TIME PLOTTED => 12:55

Dist	COUNTY	ROUTE	POST MILES TOTAL PROJECT	SHEET No.	TOTAL SHEETS
03	ED	50	56.3/58.4	11	23

REGISTERED CIVIL ENGINEER 11-12-11 DATE

1-4-11
PLANS APPROVAL DATE

REGISTERED PROFESSIONAL ENGINEER DAN WALKER No. C41224 Exp. 3-31-11 CIVIL STATE OF CALIFORNIA

THE STATE OF CALIFORNIA OR ITS OFFICERS OR AGENTS SHALL NOT BE RESPONSIBLE FOR THE ACCURACY OR COMPLETENESS OF SCANNED COPIES OF THIS PLAN SHEET.

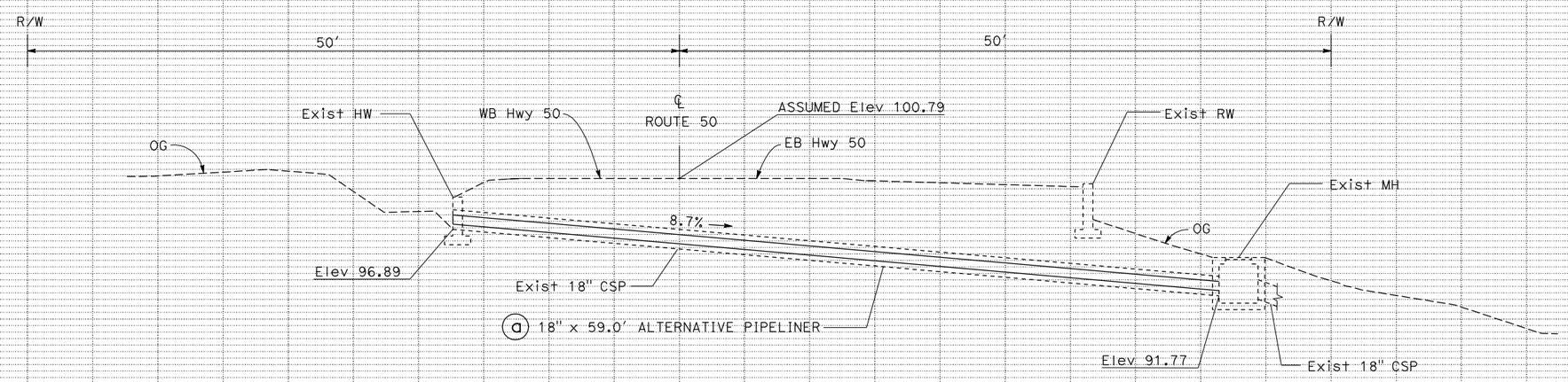

DRAINAGE SYSTEM No. 17

PM 58.36

DRAINAGE PROFILES

SCALE 1"=5' Horiz
1"=5' Vert

DP-9

70 60 50 40 30 20 10 0 10 20 30 40 50 60 70

REVISED BY	DATE REVISED
NIK BEACH	DAN WALKER
CALCULATED-DESIGNED BY	CHECKED BY
FUNCTIONAL SUPERVISOR	PAT KELLEY

STATE OF CALIFORNIA - DEPARTMENT OF TRANSPORTATION
Caltrans® **MAINTENANCE**

LAST REVISION 00-00-00
DATE PLOTTED => 13-JAN-2011
TIME PLOTTED => 12:55

Dist	COUNTY	ROUTE	POST MILES TOTAL PROJECT	SHEET No.	TOTAL SHEETS
03	ED	50	56.3/58.4	12	23

REGISTERED CIVIL ENGINEER 11-12-10 DATE

1-4-11
PLANS APPROVAL DATE

REGISTERED PROFESSIONAL ENGINEER DAN WALKER No. C41224 Exp. 3-31-11 CIVIL STATE OF CALIFORNIA

THE STATE OF CALIFORNIA OR ITS OFFICERS OR AGENTS SHALL NOT BE RESPONSIBLE FOR THE ACCURACY OR COMPLETENESS OF SCANNED COPIES OF THIS PLAN SHEET.

ALTERNATIVE PIPELINERS

DESCRIPTION	DEFORMED/REFORMED HDPE PIPELINER	CURED-IN-PLACE PIPELINER	PLASTIC * PIPELINER
18" ALTERNATIVE PIPELINER	X	X	
24" ALTERNATIVE PIPELINER		X	X

* PLASTIC PIPELINER OUTSIDE DIAMETER SHALL BE 20 INCHES.

ABBREVIATIONS:
S - STANDARD JOINT TYPE
HDPE - HIGH DENSITY POLYETHYLENE

DRAINAGE QUANTITIES

18" ALTERNATIVE PIPELINER	24" ALTERNATIVE PIPELINER	24" CURED-IN-PLACE PIPELINER	30" CURED-IN-PLACE PIPELINER	36" CURED-IN-PLACE PIPELINER	CLEANING, INSPECTING AND PREPARING HOST PIPE	REMOVE 18" CORRUGATED STEEL PIPE	REMOVE 24" CORRUGATED STEEL PIPE	18" CORRUGATED STEEL PIPE (.064" THICK)	24" CORRUGATED STEEL PIPE (.064" THICK)	MINOR CONCRETE (MINOR STRUCTURE)	MISCELLANEOUS IRON AND STEEL	REMOVE HEADWALL	IMPORTED BORROW	ROCK SLOPE PROTECTION (LIGHT, METHOD B)	ROCK SLOPE PROTECTION FABRIC	DITCH EXCAVATION	REPAIR SPALLED CONCRETE (POLYESTER GROUT)	REMOVE MARKER (CULVERT)	MARKER (CULVERT)	PIPE JOINT CLASSIFICATION (N)	HEIGHT OF INLET (N)	DESCRIPTION	DRAINAGE SHEET No.	DRAINAGE SYSTEM No. ⬡	DRAINAGE UNIT No. ○
LF	LF	LF	LF	LF	LF	LF	LF	LF	LF	CY	LB	EA	CY	TON	SQYD	CY	SQFT	EA	EA		LF				
		107.1			107.1											4.0		2	2			24" CURED-IN-PLACE PIPELINER	DP-1	1	a
44.6					44.6													2	2			18" ALTERNATIVE PIPELINER		2	a
																	15	2	2			REPAIR SPALLED CONCRETE	DD-1	3	a
				78.8	78.8													2	2			36" CURED-IN-PLACE PIPELINER	DP-2	4	a
97.0					97.0																	18" ALTERNATIVE PIPELINER	DP-3	5	a
														5.9	10.7			2	2			ROCK SLOPE PROTECTION			b
104.0					104.0																	18" ALTERNATIVE PIPELINER		6	a
														5.9	10.7			2	2			ROCK SLOPE PROTECTION			b
						2.0																REMOVE 18" CSP	DP-4		a
								4.0												S		18" CSP		7	b
										0.91			1.0					2	2			STRAIGHT HW			c
53.1					51.1																	18" ALTERNATIVE PIPELINER			d
						2.0																REMOVE 18" CSP		8	a
								6.0										2	2	S		18" CSP			b
65.6					61.6											0.9						18" ALTERNATIVE PIPELINER			c
364.3	0	107.1	0	78.8	544.2	4.0	0	10.0	0	0.91	0	0	1.0	11.8	21.4	4.9	15	16	16			SHEET DQ-1 TOTAL			

(N) - NOT A SEPARATE PAY ITEM, FOR INFORMATION ONLY.

DRAINAGE QUANTITIES
DQ-1

STATE OF CALIFORNIA - DEPARTMENT OF TRANSPORTATION
Caltrans® MAINTENANCE

FUNCTIONAL SUPERVISOR: PAT KELLEY
CALCULATED-DESIGNED BY: NIK BEACH
CHECKED BY: DAN WALKER
REVISED BY
DATE REVISED

LAST REVISION 00-00-00
DATE PLOTTED => 13-JAN-2011
TIME PLOTTED => 12:55

Dist	COUNTY	ROUTE	POST MILES TOTAL PROJECT	SHEET No.	TOTAL SHEETS
03	ED	50	56.3/58.4	13	23

REGISTERED CIVIL ENGINEER 11-12-10 DATE

1-4-11
PLANS APPROVAL DATE

REGISTERED PROFESSIONAL ENGINEER DAN WALKER No. C41224 Exp. 3-31-11 CIVIL STATE OF CALIFORNIA

THE STATE OF CALIFORNIA OR ITS OFFICERS OR AGENTS SHALL NOT BE RESPONSIBLE FOR THE ACCURACY OR COMPLETENESS OF SCANNED COPIES OF THIS PLAN SHEET.

DRAINAGE QUANTITIES

18" ALTERNATIVE PIPELINER	24" ALTERNATIVE PIPELINER	24" CURED-IN-PLACE PIPELINER	30" CURED-IN-PLACE PIPELINER	36" CURED-IN-PLACE PIPELINER	CLEANING, INSPECTING AND PREPARING HOST PIPE	REMOVE 18" CORRUGATED STEEL PIPE	REMOVE 24" CORRUGATED STEEL PIPE	18" CORRUGATED STEEL PIPE (.064" THICK)	24" CORRUGATED STEEL PIPE (.064" THICK)	MINOR CONCRETE (MINOR STRUCTURE)	MISCELLANEOUS IRON AND STEEL	REMOVE HEADWALL	IMPORTED BORROW	ROCK SLOPE PROTECTION (LIGHT, METHOD B)	ROCK SLOPE PROTECTION FABRIC	DITCH EXCAVATION	REPAIR SPALLED CONCRETE (POLYESTER GROUT)	REMOVE MARKER (CULVERT)	MARKER (CULVERT)	PIPE JOINT CLASSIFICATION (N)	HEIGHT OF INLET (N)	DESCRIPTION	DRAINAGE SHEET No.	DRAINAGE SYSTEM No.	DRAINAGE UNIT No.
LF	LF	LF	LF	LF	LF	LF	LF	LF	LF	CY	LB	EA	CY	TON	SQYD	CY	SQFT	EA	EA		LF				
												1										REMOVE HW	DP-5	9	a
						1.0																REMOVE 18" CSP			b
						4.0																REMOVE 18" CSP			c
								6.0										2	2	S		18" CSP			d
								2.0												S		18" CSP			e
51.5					49.5																	18" ALTERNATIVE PIPELINER			f
										1.33	414		14.9								3.2	TYPE G1 Mod DI, GRATE TYPE 24-12X AND SIDE INLET			g
							6.0															REMOVE 24" CSP		10	a
									6.0									2	2	S		24" CSP			b
	109.9				109.9																	24" ALTERNATIVE PIPELINER			c
104.5					104.5													2	2			18" ALTERNATIVE PIPELINER	DP-6	11	a
		49.7			49.7													2	2			24" CURED-IN-PLACE PIPELINER		12	a
						2.0																REMOVE 18" CSP	DP-7	13	a
								2.0												S		18" CSP			b
						8.0																REMOVE 18" CSP			c
														4.3	8.2			2	2			ROCK SLOPE PROTECTION			d
								2.0												S		18" CSP			e
78.0					84.0																	18" ALTERNATIVE PIPELINER			f
234.0	109.9	49.7	0	0	397.6	15.0	6.0	12.0	6.0	1.33	414	1	14.9	4.3	8.2	0	0	10	10			SHEET DQ-2 TOTAL			

(N) - NOT A SEPARATE PAY ITEM, FOR INFORMATION ONLY.

CALCULATED-DESIGNED BY NIK BEACH
CHECKED BY DAN WALKER
REVISED BY
DATE REVISED
FUNCTIONAL SUPERVISOR PAT KELLEY

STATE OF CALIFORNIA - DEPARTMENT OF TRANSPORTATION
Caltrans® MAINTENANCE

DRAINAGE QUANTITIES
DQ-2

LAST REVISION 00-00-00
DATE PLOTTED => 13-JAN-2011
TIME PLOTTED => 12:55

Dist	COUNTY	ROUTE	POST MILES TOTAL PROJECT	SHEET No.	TOTAL SHEETS
03	ED	50	56.3/58.4	14	23

REGISTERED CIVIL ENGINEER 11-12-10 DATE

1-4-11
PLANS APPROVAL DATE

REGISTERED PROFESSIONAL ENGINEER DAN WALKER No. C41224 Exp. 3-31-11 CIVIL STATE OF CALIFORNIA

THE STATE OF CALIFORNIA OR ITS OFFICERS OR AGENTS SHALL NOT BE RESPONSIBLE FOR THE ACCURACY OR COMPLETENESS OF SCANNED COPIES OF THIS PLAN SHEET.

DRAINAGE QUANTITIES

18" ALTERNATIVE PIPELINER	24" ALTERNATIVE PIPELINER	24" CURED-IN-PLACE PIPELINER	30" CURED-IN-PLACE PIPELINER	36" CURED-IN-PLACE PIPELINER	CLEANING, INSPECTING AND PREPARING HOST PIPE	REMOVE 18" CORRUGATED STEEL PIPE	REMOVE 24" CORRUGATED STEEL PIPE	18" CORRUGATED STEEL PIPE (.064" THICK)	24" CORRUGATED STEEL PIPE (.064" THICK)	MINOR CONCRETE (MINOR STRUCTURE)	MISCELLANEOUS IRON AND STEEL	REMOVE HEADWALL	IMPORTED BORROW	ROCK SLOPE PROTECTION (LIGHT, METHOD B)	ROCK SLOPE PROTECTION FABRIC	DITCH EXCAVATION	REPAIR SPALLED CONCRETE (POLYESTER GROUT)	REMOVE MARKER (CULVERT)	MARKER (CULVERT)	PIPE JOINT CLASSIFICATION (N)	HEIGHT OF INLET (N)	DESCRIPTION	DRAINAGE SHEET No.	DRAINAGE SYSTEM No.	DRAINAGE UNIT No.
LF	LF	LF	LF	LF	LF	LF	LF	LF	LF	CY	LB	EA	CY	TON	SQYD	CY	SQFT	EA	EA		LF				
						2.0																REMOVE 18" CSP	DP-7	14	a
								2.0										2	2	S		18" CSP			b
65.5					65.5																	18" ALTERNATIVE PIPELINER			c
			136.0		136.0													2	2			30" CURED-IN-PLACE PIPELINER	DP-8	15	a
						1.0																REMOVE 18" CSP		16	a
								3.0										2	2	S		18" CSP			b
45.4					43.4																	18" ALTERNATIVE PIPELINER			c
59.0					59.0													2	2			18" ALTERNATIVE PIPELINER	DP-9	17	a
169.9	0	0	136.0	0	303.9	3.0	0	5.0	0	0	0	0	0	0	0	0	0	8	8			SHEET DQ-3 TOTAL			
364.3	0	107.1	0	78.8	544.2	4.0	0	10.0	0	0.91	0	0	1.0	11.8	21.4	4.9	15	16	16			SHEET DQ-1 TOTAL			
234.0	109.9	49.7	0	0	397.6	15.0	6.0	12.0	6.0	1.33	414	1	14.9	4.3	8.2	0	0	10	10			SHEET DQ-2 TOTAL			
768.2	109.9	156.8	136.0	78.8	1245.7	22.0	6.0	27.0	6.0	2.24	414	1	15.9	16.1	29.6	4.9	15	34	34			TOTAL			

(N) - NOT A SEPARATE PAY ITEM, FOR INFORMATION ONLY.

STATE OF CALIFORNIA - DEPARTMENT OF TRANSPORTATION
Caltrans® MAINTENANCE

FUNCTIONAL SUPERVISOR: PAT KELLEY
CALCULATED-DESIGNED BY: NIK BEACH
CHECKED BY: DAN WALKER
REVISED BY
DATE REVISED

DRAINAGE QUANTITIES
DQ-3

LAST REVISION 00-00-00
DATE PLOTTED => 13-JAN-2011
TIME PLOTTED => 12:55

Dist	COUNTY	ROUTE	POST MILES TOTAL PROJECT	SHEET No.	TOTAL SHEETS
03	ED	50	56.3/58.4	15	23

REGISTERED CIVIL ENGINEER 11-12-10 DATE

1-4-11
PLANS APPROVAL DATE

REGISTERED PROFESSIONAL ENGINEER DAN WALKER No. C41224 Exp. 3-31-11 CIVIL STATE OF CALIFORNIA

THE STATE OF CALIFORNIA OR ITS OFFICERS OR AGENTS SHALL NOT BE RESPONSIBLE FOR THE ACCURACY OR COMPLETENESS OF SCANNED COPIES OF THIS PLAN SHEET.

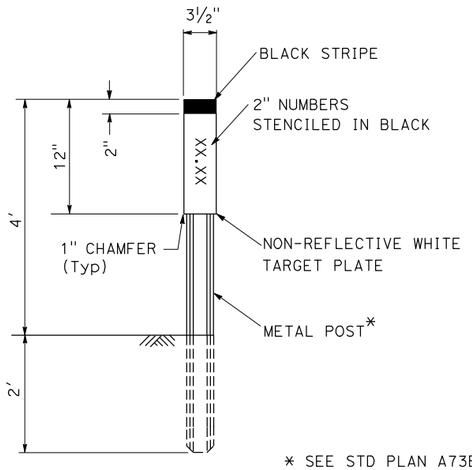

NO SCALE

* SEE STD PLAN A73B FOR METAL POST DETAILS

STENCILED NUMBERS

DRAINAGE SYSTEM No.	XX.XX
1	56.31
2	56.34
3	56.38
4	56.53
5	56.57
6	56.60
7	56.66
8	56.71
9	56.83
10	57.00
11	57.19
12	57.52
13	57.68
14	57.73
15	57.98
16	58.19
17	58.36

MARKER (CULVERT)

MARKER (CULVERT) NOTES:

1. PLACE TWO EACH PER LOCATION (LEFT AND RIGHT).
2. PLACE MINIMUM 2' AND MAXIMUM 12' FROM EDGE OF PAVEMENT.
3. EXACT LOCATION TO BE DETERMINED BY THE ENGINEER.

LEGEND:

(No.) DRAINAGE SYSTEM No.

(X) DRAINAGE UNIT

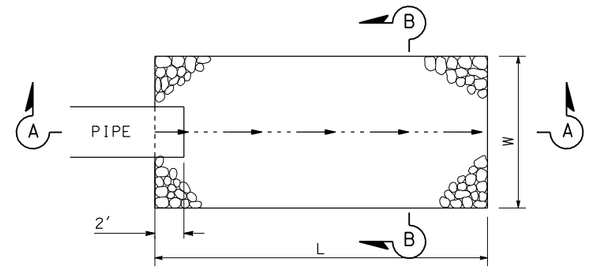

PLAN

NO SCALE

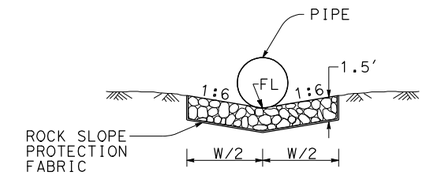

SECTION B-B

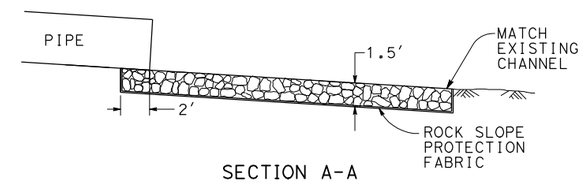

SECTION A-A

DRAINAGE SYSTEM No.	LOCATION PM	L FT	W FT
5	56.57	11.0	4.5
6	56.60	11.0	4.5
13	57.68	8.0	4.5

ROCK SLOPE PROTECTION

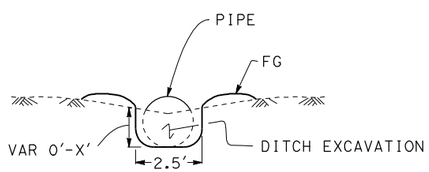

SECTION VIEW

NO SCALE

DRAINAGE SYSTEM No.	LOCATION PM	INLET/ OUTLET	LENGTH FT	"X" FT
1	56.31	INLET	17	3.0
1	56.31	OUTLET	18	2.0
8	56.71	OUTLET	13	1.5

REGRADE DITCH

REGRADE DITCH NOTES:

REGRADE DITCH USING HAND TOOLS.
GRADE TO DRAIN.
DEPOSIT EXCAVATED MATERIAL ALONG SIDE DITCH.
ALIGNMENT SHALL FOLLOW EXISTING DITCH FLOWLINE.

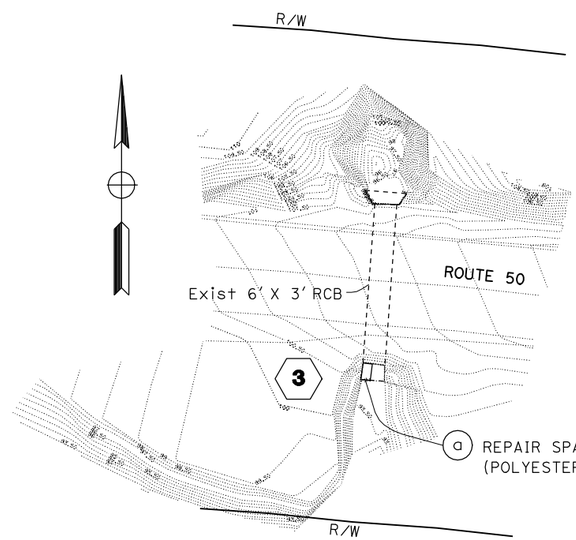

a REPAIR SPALLED CONCRETE (POLYESTER GROUT)

REPAIR SPALLED CONCRETE ON RCB

LOCATION 3 - ED 50 PM 56.38

SCALE 1" = 20'

LOCATION 3 NOTES:

1. SEE TEMPORARY WATER POLLUTION CONTROL DETAILS FOR WATER DIVERSION DETAILS. EXISTING BAR REINFORCEMENT NOT SHOWN FOR CLARITY.

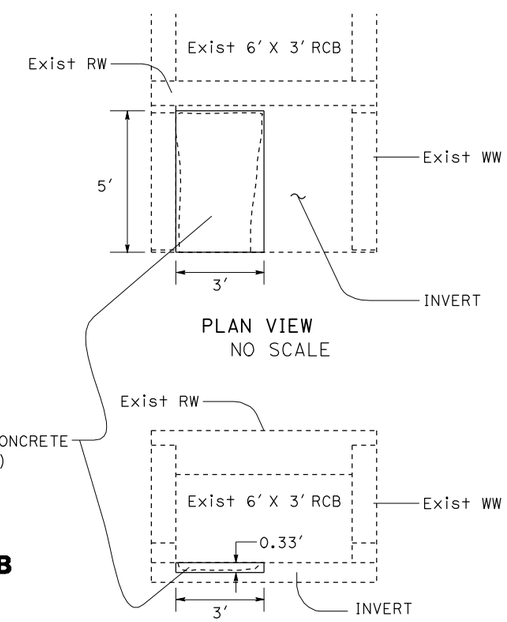

PLAN VIEW

NO SCALE

ELEVATION VIEW

NO SCALE

DRAINAGE DETAILS

SCALE AS SHOWN

DD-1

REVISED BY | DATE REVISED

NIK BEACH | DAN WALKER

CALCULATED-DESIGNED BY | CHECKED BY

FUNCTIONAL SUPERVISOR: PAT KELLEY

STATE OF CALIFORNIA - DEPARTMENT OF TRANSPORTATION

Caltrans® MAINTENANCE

LAST REVISION 00-00-00 | DATE PLOTTED => 13-JAN-2011 | TIME PLOTTED => 12:55

Dist	COUNTY	ROUTE	POST MILES TOTAL PROJECT	SHEET No.	TOTAL SHEETS
03	ED	50	56.3/58.4	16	23

REGISTERED CIVIL ENGINEER 11-12-10 DATE

1-4-11
PLANS APPROVAL DATE

REGISTERED PROFESSIONAL ENGINEER DAN WALKER No. C41224 Exp. 3-31-11 CIVIL STATE OF CALIFORNIA

THE STATE OF CALIFORNIA OR ITS OFFICERS OR AGENTS SHALL NOT BE RESPONSIBLE FOR THE ACCURACY OR COMPLETENESS OF SCANNED COPIES OF THIS PLAN SHEET.

NOTES:

1. FOR DETAILS NOT SHOWN, SEE STANDARD PLANS D73.
2. WALLS AND BOTTOM OF SIDE INLET SHALL BE REINFORCED WITH #5 BARS @ 9" CENTERS (BOTH WAYS) PLACED 1½" CLEAR TO INSIDE OF BOX.
3. DRILL AND BOND DOWELS (#5 BARS) @ 6" CENTERS TO ATTACH SIDE INLET TO G1 DI. USE 12" DOWELS ON SIDE WALLS AND BOTTOM, 6" DOWELS ELSEWHERE.
4. FOR DETAILS ON DOWELS NOT SHOWN, SEE STANDARD Specs Sec 51-1.13.
5. FOR SIDE INLET GRATE, USE 3" OD STEEL PIPE (0.500 IN THICK) CONFORMING TO: ASTM A 513 TYPE 5, (TOTAL GRATE WEIGHT 117 LBS.)
6. FOR SIDE INLET FRAME, USE 4" X 3" X ¼" STRUCTURAL STEEL ANGLE CONFORMING TO: ASTM A 36, (TOTAL FRAME WEIGHT 58 LBS.)
7. FOR ALL FRAMES, USE Alt ANCHOR, SEE Std Plan D77A

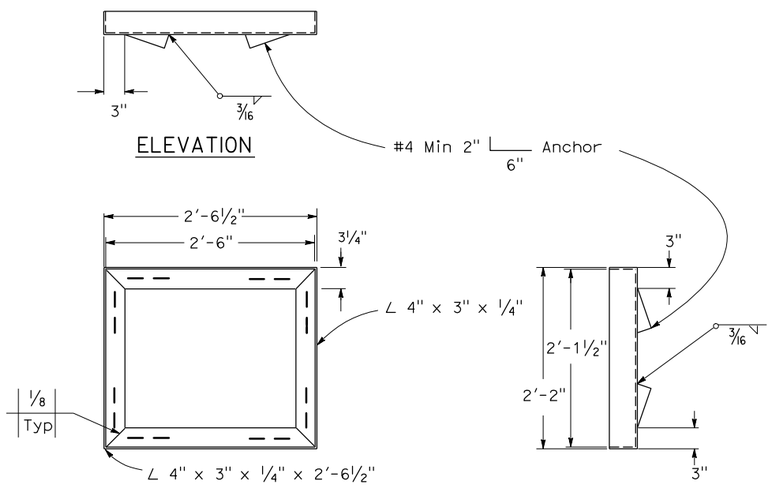

SIDE INLET FRAME

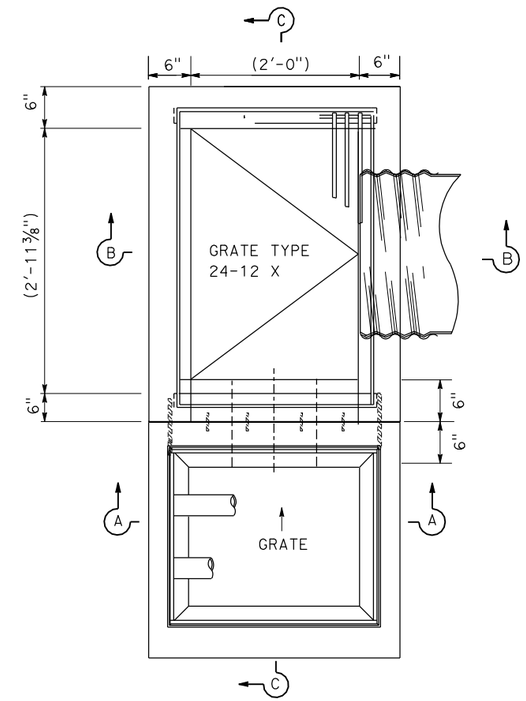

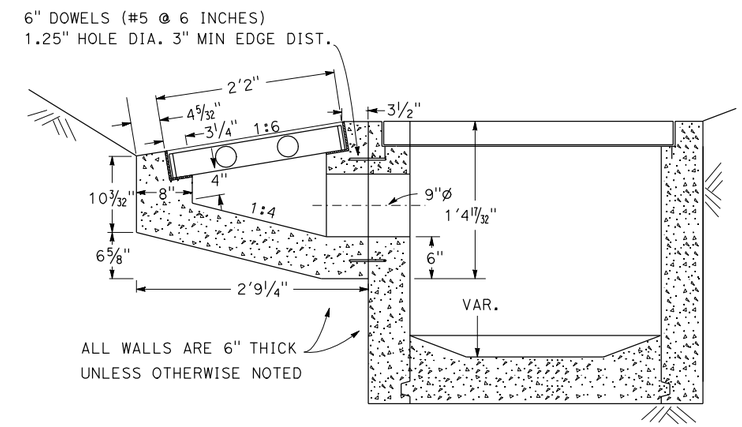

SECTION C-C

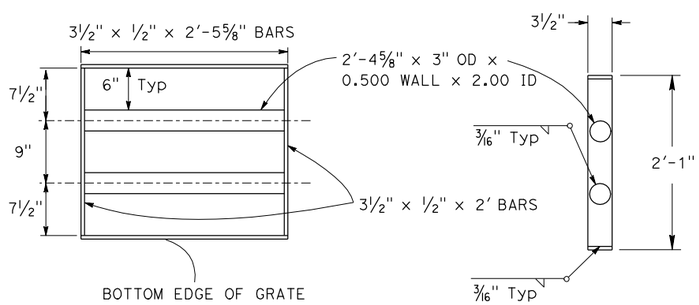

SIDE INLET GRATE

PLAN

RIGHT SIDE

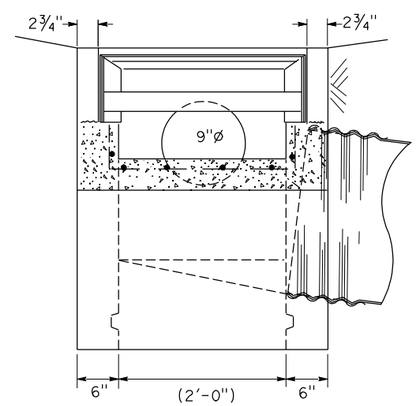

SECTION A-A

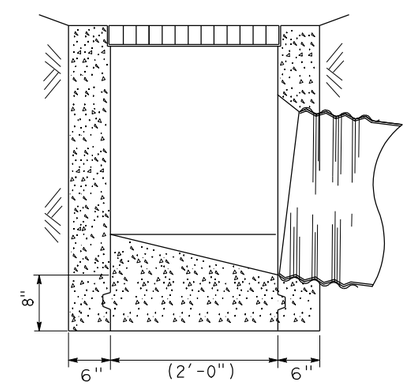

SECTION B-B

MODIFIED G1 DI WITH SIDE INLET

DRAINAGE DETAILS
NO SCALE

DD-2

STATE OF CALIFORNIA - DEPARTMENT OF TRANSPORTATION
Caltrans® **MAINTENANCE**

FUNCTIONAL SUPERVISOR: PAT KELLEY
CALCULATED-DESIGNED BY: NIK BEACH
CHECKED BY: DAN WALKER
REVISED BY / DATE REVISED

LAST REVISION 00-00-00
DATE PLOTTED => 13-JAN-2011
TIME PLOTTED => 12:55

Dist	COUNTY	ROUTE	POST MILES TOTAL PROJECT	SHEET No.	TOTAL SHEETS
03	ED	50	56.3/58.4	17	23

Dan Walker 11-12-10
REGISTERED CIVIL ENGINEER DATE

1-4-11
PLANS APPROVAL DATE

REGISTERED PROFESSIONAL ENGINEER DAN WALKER No. C41224 Exp. 3-31-11 CIVIL STATE OF CALIFORNIA

THE STATE OF CALIFORNIA OR ITS OFFICERS OR AGENTS SHALL NOT BE RESPONSIBLE FOR THE ACCURACY OR COMPLETENESS OF SCANNED COPIES OF THIS PLAN SHEET.

LEGEND:

(No.) DRAINAGE SYSTEM No.

(X) DRAINAGE UNIT

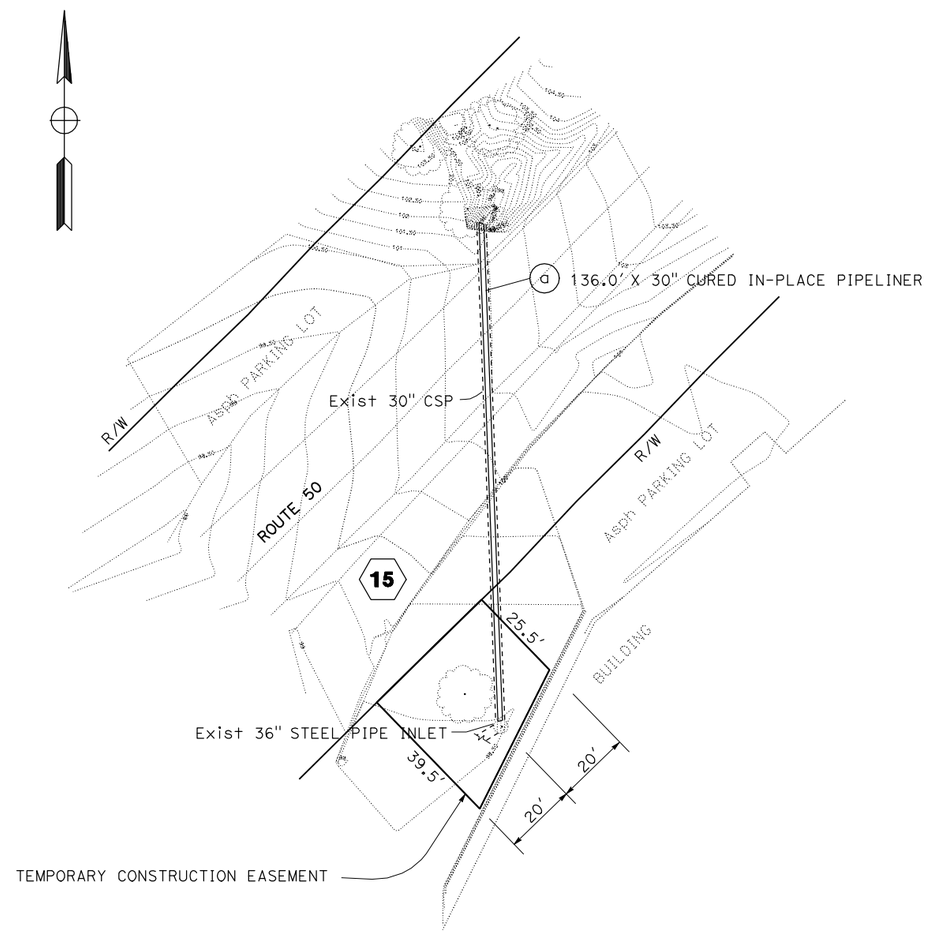

TEMPORARY CONSTRUCTION EASEMENT

LOCATION 15 - ED 50 PM 57.98

SCALE 1" = 20'

DRAINAGE DETAILS

SCALE AS SHOWN

DD-3

STATE OF CALIFORNIA - DEPARTMENT OF TRANSPORTATION
Caltrans® **MAINTENANCE**

FUNCTIONAL SUPERVISOR: PAT KELLEY

CALCULATED-DESIGNED BY: NIK BEACH
CHECKED BY: DAN WALKER

REVISED BY
DATE REVISED

LAST REVISION 00-00-00
DATE PLOTTED => 13-JAN-2011
TIME PLOTTED => 12:55

Dist	COUNTY	ROUTE	POST MILES TOTAL PROJECT	SHEET No.	TOTAL SHEETS
03	ED	50	56.3 / 58.4	18	23

LICENSED LANDSCAPE ARCHITECT

1-4-11

PLANS APPROVAL DATE

LICENSED LANDSCAPE ARCHITECT JEFFREY L. PIETRZAK NO. 4457 STATE OF CALIFORNIA Signature 1-5-11 Renewal Date 12-31-11 Date

THE STATE OF CALIFORNIA OR ITS OFFICERS OR AGENTS SHALL NOT BE RESPONSIBLE FOR THE ACCURACY OR COMPLETENESS OF SCANNED COPIES OF THIS PLAN SHEET.

NOTE:

1. For clarity, perspective view does not show all of the fasteners required for the installation of the type fo rolled erosion control product specified.

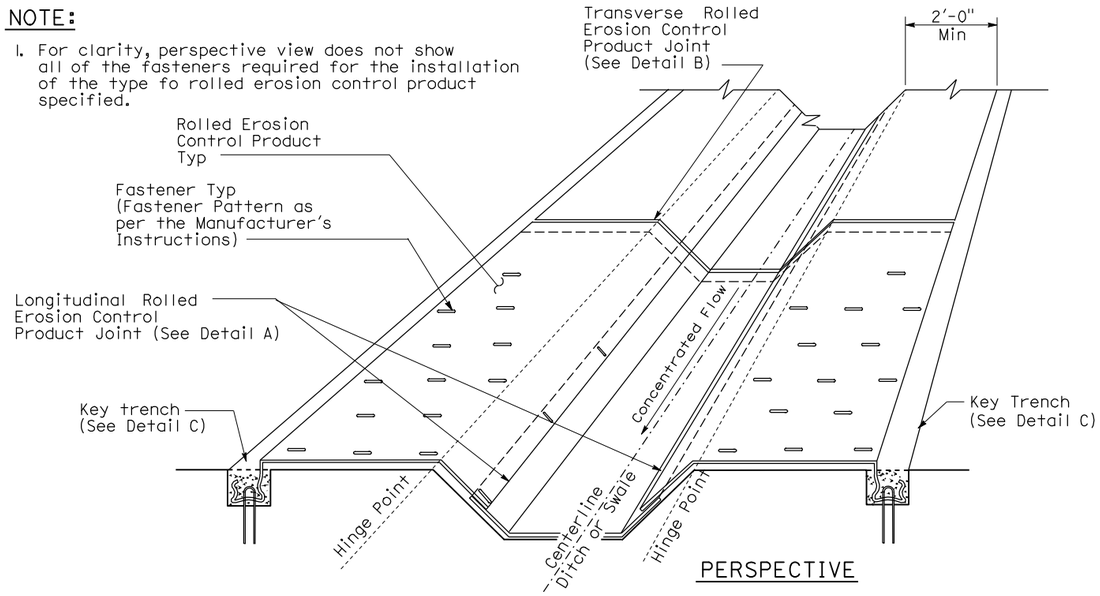

PERSPECTIVE

ROLLED EROSION CONTROL PRODUCT IN TRAPAZOIDAL DITCH OR SWALE

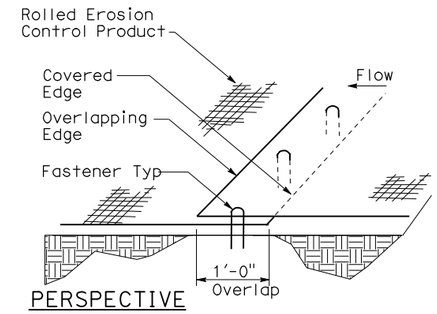

PERSPECTIVE

DETAIL A
LONGITUDINAL BLANKET JOINT

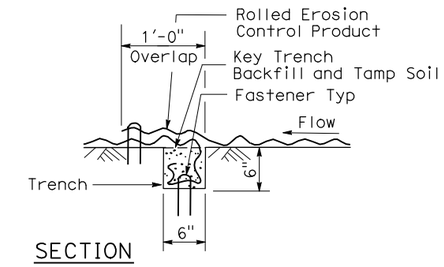

SECTION

DETAIL B
TRANSVERSE ROLLED EROSION CONTROL PRODUCT JOINT

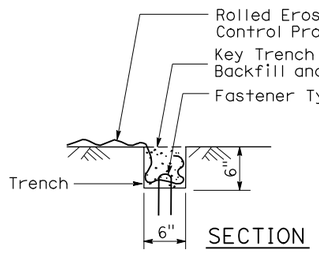

SECTION

DETAIL C
KEY TRENCH

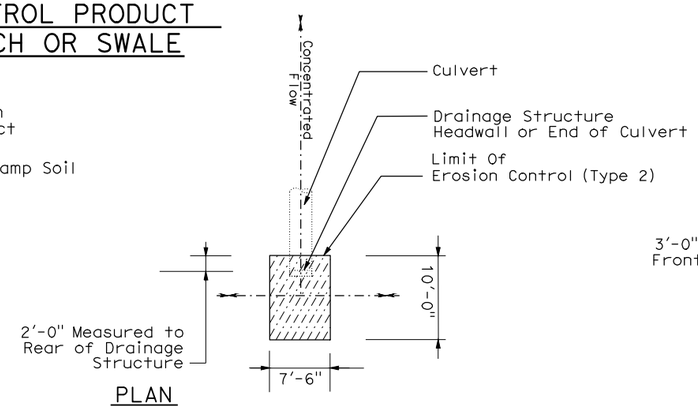

PLAN

DETAIL D
EROSION CONTROL

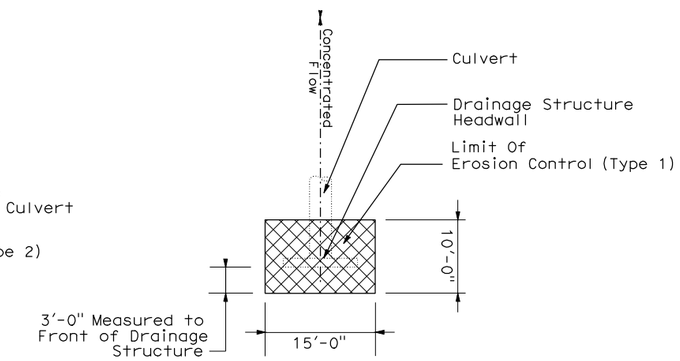

PLAN

DETAIL E
EROSION CONTROL

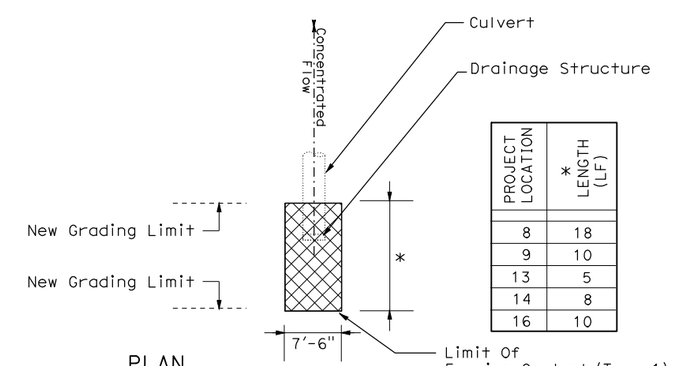

PROJECT LOCATION	* LENGTH (LF)
8	18
9	10
13	5
14	8
16	10

PLAN

DETAIL F
EROSION CONTROL

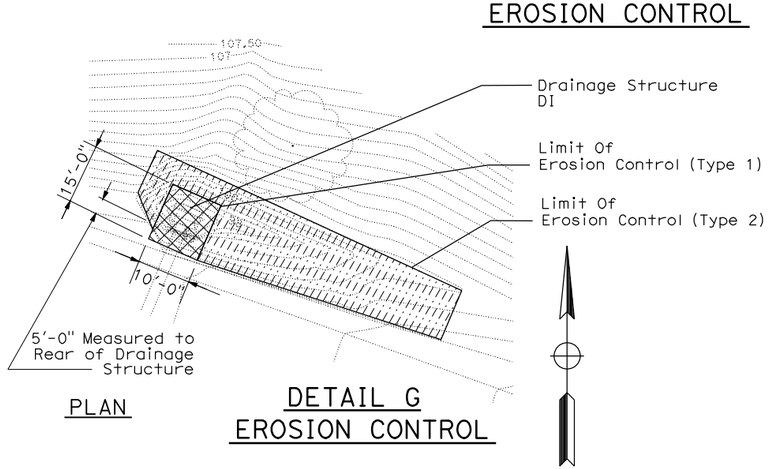

PLAN

DETAIL G
EROSION CONTROL

EROSION CONTROL QUANTITIES

PROJECT LOCATION	STATION	LOC	DETAIL	EROSION CONTROL TYPE	MULCH CY	RECP (NETTING) SQFT
1	56.31	INLET	D	2	0.9	0
1	56.31	OULET	D	2	0.9	0
7	56.66	OUTLET	E	1	1.8	150
8	56.71	OUTLET	F	1	1.8	150
9	56.83	INLET	G	1, 2	16.5	150
9	56.83	OUTLET	F	1	0.5	38
13	57.68	INLET	F	1	0.7	60
14	57.73	OUTLET	F	1	0.7	60
16	58.19	OUTLET	F	1	0.9	75
				TOTAL	25	683

ALL DIMENSIONS IN INCHES UNLESS OTHERWISE NOTED

LANDSCAPE DETAILS

NO SCALE

LD-1

STATE OF CALIFORNIA - DEPARTMENT OF TRANSPORTATION

Caltrans

CALCULATED-DESIGNED BY JEFFREY L. PIETRZAK

CHECKED BY DAN WALKER

SENIOR LANDSCAPE ARCHITECT KENNETH MURRAY

REVISED BY | DATE REVISED

LAST REVISION 00-00-00

DATE PLOTTED => 13-JAN-2011
TIME PLOTTED => 12:55

DIST	COUNTY	ROUTE	POST MILES TOTAL PROJECT	SHEET NO.	TOTAL SHEETS
03	ED	50	56.3/58.4	19	23

Raymond Don Tsztoo
REGISTERED CIVIL ENGINEER

June 6, 2008
PLANS APPROVAL DATE

REGISTERED PROFESSIONAL ENGINEER
Raymond Don Tsztoo
No. C37332
Exp. 6-30-08
CIVIL
STATE OF CALIFORNIA

The State of California or its officers or agents shall not be responsible for the accuracy or completeness of electronic copies of this plan sheet.

To accompany plans dated 1-4-11

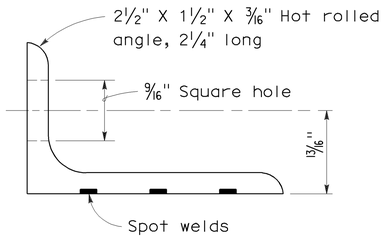

ANGLE

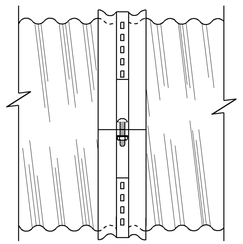

SIDE VIEW
ANGLE

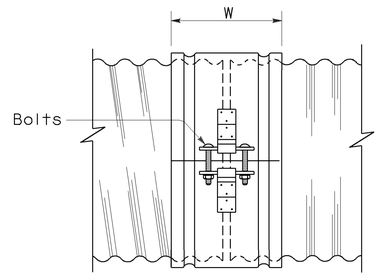

SIDE VIEW
SINGLE BAR AND STRAP

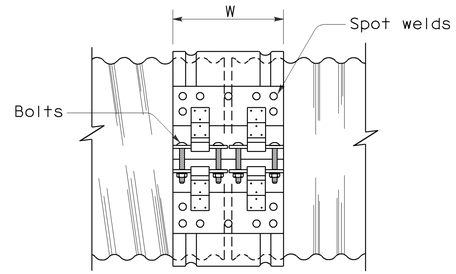

SIDE VIEW
DOUBLE BAR AND STRAP

NOTES:

1. All ferrous metal coupling band connection hardware shall be galvanized or electroplated in accordance with the Standard Specifications.
2. Dimensions and thicknesses shown are minimum.
3. Spot welds shall develop minimum required strength of strap.
4. Fillet welds of equivalent strength may be substituted for spot welds or rivets.
5. Dimension depends upon whether end condition is lips up or lips down.

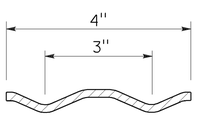

SECTION

H-4 HUGGER BAND

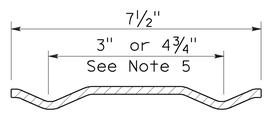

SECTION

H-7 HUGGER BAND

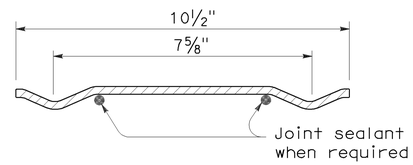

SECTION

H-10 HUGGER BAND

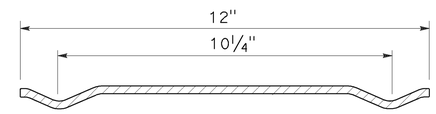

SECTION

H-12 HUGGER BAND

HUGGER COUPLING BANDS

STATE OF CALIFORNIA
DEPARTMENT OF TRANSPORTATION

CORRUGATED METAL PIPE COUPLING DETAILS No. 4 HUGGER COUPLING BANDS

NO SCALE

RSP D97D DATED JUNE 6, 2008 SUPERSEDES STANDARD PLAN D97D
DATED MAY 1, 2006 - PAGE 186 OF THE STANDARD PLANS BOOK DATED MAY 2006.

REVISED STANDARD PLAN RSP D97D

2006 REVISED STANDARD PLAN RSP D97D

3-24-08

DIST	COUNTY	ROUTE	POST MILES TOTAL PROJECT	SHEET NO.	TOTAL SHEETS
03	ED	50	56.3/58.4	20	23

Raymond Don Tsztoo
REGISTERED CIVIL ENGINEER

June 6, 2008
PLANS APPROVAL DATE

REGISTERED PROFESSIONAL ENGINEER Raymond Don Tsztoo No. C37332 Exp. 6-30-08 CIVIL STATE OF CALIFORNIA

The State of California or its officers or agents shall not be responsible for the accuracy or completeness of electronic copies of this plan sheet.

ANNULAR AND HELICAL PROFILE

COUPLING TYPE	PIPE CORRUGATION	PIPE SIZE	W OR A	PIPE WALL THICKNESS CSP	PIPE WALL THICKNESS CAP	BAND THICKNESS CSP	BAND THICKNESS CAP	BAR AND STRAP (CSP ONLY) STRAP THICKNESS	BOLTS Dia	BAR Dia	BAR YIELD STRENGTH	ANGLE DIMENSIONS CSP	ANGLE DIMENSIONS CAP	BOLTS (No.- Dia) CSP	BOLTS (No.- Dia) CAP	RIVETS ANGLE TO BAND CSP	RIVETS ANGLE TO BAND CAP	SPOT WELDS ANGLE TO BAND CSP
TWO PIECE INTEGRAL FLANGE	1½′ × ¼"	6"-10"	7"	0.052"-0.079"	0.048"-0.060"	0.052"	0.060"							2-⅜"	2-⅜"			
		12"-18"	7"	0.052"-0.079"		0.064"								2-½"				
	2⅔" × ½"	12"-24"	7"	0.052"-0.079"	0.060"-0.105"	0.064"	0.060"							2-½"	2-½"			
UNIVERSAL	2⅔" × ½"	THROUGH 36"	12"	0.052"-0.138"	0.060"-0.135"	0.052"	0.060"					2" × 2" × 3/16"	2" × 2" × 3/16"	3-½"	3-½"	3-⅜"	3-⅜"	3-½"
		42"-60"	12"	0.052"-0.168"	0.075"-0.164"	0.052"	0.060"					2" × 2" × 3/16"	2" × 2" × 3/16"	3-½"	3-½"	3-⅜"	3-⅜"	5-½"
		THROUGH 72"	12"	0.052"-0.168"	0.164"	0.052"	0.105"	0.079"	½"	⅞"	32 ksi	2" × 2" × 3/16"	2" × 2" × 3/16"	3-½"	3-½"	3-⅜"	3-⅜"	5-½"
		78"-84"	16¼"	0.168"		0.079"		DOUBLE 0.079"	½"	⅞"	32 ksi							
ANNULAR	2⅔" × ½"	THROUGH 36"	7"	0.064"-0.138"	0.060"-0.135"	0.052"	0.060"	0.079"	½"	⅞"	32 ksi	2" × 2" × 3/16"	2" × 2" × 3/16"	2-½"	2-½"	3-⅜"	3-⅜"	3-½"
		42"-72"	12"	0.064"-0.168"	0.075"-0.164"	0.052"	0.105"	0.079"	½"	⅞"	32 ksi	2" × 2" × 3/16"	2" × 2" × 3/16"	3-½"	3-½"	3-⅜"	3-⅜"	5-½"
		78"-84"	12"	0.168"		0.079"		0.109"	½"	⅞"	45 ksi	2" × 2" × 3/16"		3-½"		3-⅜"		5-½"
	3" × 1"	48"-90"	14"	0.064"-0.109"		0.052"		0.079"	½"	⅞"	32 ksi	2" × 2" × 3/16"		3-½"		3-⅜"		5-½"
		96"-120"	14"	0.079"-0.109"		0.052"		0.109"	½"	⅞"	45 ksi	2" × 2" × 3/16"		3-½"		4-⅜"		
		42"-108"	14"		0.060"-0.135"		0.060"						2" × 2" × 3/16"		3-½"		3-⅜"	
HELICAL	2⅔" × ½"	THROUGH 36"	12"	0.052"-0.138"	0.060"-0.135"	0.052"	0.060"	0.079"	½"	⅞"	32 ksi	2" × 2" × 3/16"	2" × 2" × 3/16"	3-½"	3-½"	3-⅜"	3-⅜"	3-½"
		42"-72"	12"	0.052"-0.168"	0.075"-0.164"	0.052"	0.060"	0.079"	½"	⅞"	32 ksi	2" × 2" × 3/16"	2" × 2" × 3/16"	3-½"	3-½"	3-⅜"	3-⅜"	5-½"
		78"-84"	12"	0.168"		0.079"		0.109"	½"	⅞"	45 ksi	2" × 2" × 3/16"		3-½"		3-⅜"		5-½"
	3" × 1"	48"-90"	14"	0.064"-0.109"		0.052"		0.079"	½"	⅞"	32 ksi	2" × 2" × 3/16"		3-½"		3-⅜"		5-½"
		96"-120"	14"	0.079"-0.109"		0.052"		0.109"	½"	⅞"	45 ksi	2" × 2" × 3/16"		3-½"		4-⅜"		
		42"-108"	14"		0.060"-0.135"		0.060"						2" × 2" × 3/16"		3-½"		3-⅜"	
HUGGER	2⅔" × ½" REROLLED END	12"-54"	4"	0.052"-0.109"		0.052"						2½" × 1½" × 3/16"	2½" × 1½" × 3/16"	1-½"				3-½"
		60"-66"	4"	0.109"		0.064"						2½" × 1½" × 3/16"	2½" × 1½" × 3/16"	1-½"				3-½"
		36"-48"	4"	0.138"		0.064"						2½" × 1½" × 3/16"	2½" × 1½" × 3/16"	1-½"				3-½"
		THROUGH 72"	10½"	0.052"-0.168"		0.052"		0.079"	½"	⅞"	32 ksi							
		78"-84"	10½"	0.168"		0.079"		0.109"	½"	⅞"	45 ksi							
	3" × 1" REROLLED END	48"-90"	10½"	0.064"-0.109"		0.052"		0.079"	½"	⅞"	32 ksi							
		96"-120"	10½"	0.079"-0.109"		0.052"		0.109"	½"	⅞"	45 ksi							
	5" × 1" REROLLED END	48"-66"	7½"	0.064"-0.109"		0.064"		0.079"	½"	⅞"	32 ksi	2½" × 1½" × 3/16"	2½" × 1½" × 3/16"	1-½"				3-½"
		72"-90"	7½"	0.064"-0.079"		0.064"		0.079"	½"	⅞"	32 ksi	2½" × 1½" × 3/16"	2½" × 1½" × 3/16"	1-½"				3-½"
		48"-90"	7½"	0.064"-0.138"		0.064"		0.079"	½"	⅞"	32 ksi							
		48"-120"	12" SEE	0.064"-0.109"		0.064"		0.079"	½"	⅞"	32 ksi							
		48"-84"	12" NOTE	0.138"		0.064"		0.079"	½"	⅞"	32 ksi							
		90"-120"	12" 11	0.138"		0.064"		DOUBLE 0.079"	½"	⅞"	32 ksi							

SPIRAL RIB PROFILE

COUPLING TYPE	PIPE CORRUGATION	PIPE SIZE	W	PIPE WALL THICKNESS SSRP	PIPE WALL THICKNESS ASRP	BAND THICKNESS SSRP	BAND THICKNESS ASRP	BAR AND STRAP (SSRP ONLY) STRAP THICKNESS	BOLTS Dia	BAR Dia	BAR YIELD STRENGTH	ANGLE DIMENSIONS SSRP	ANGLE DIMENSIONS ASRP	BOLTS (No.- Dia) SSRP	BOLTS (No.- Dia) ASRP	RIVETS ANGLE TO BAND SSRP	RIVETS ANGLE TO BAND ASRP	SPOT WELDS ANGLE TO BAND SSRP
ANNULAR	2⅔" × ½" * REROLLED END	24"-36"	12"	0.064"-0.109"	0.060"-0.105"	0.052"	0.060"	0.079"	½"	⅞"	32 ksi	2" × 2" × 3/16"	2" × 2" × 3/16"	3-½"	3-½"	3-⅜"	3-⅜"	5-½"
		42"-60"	12"	0.064"-0.109"	0.075"-0.105"	0.052"	0.105"	0.079"	½"	⅞"	32 ksi	2" × 2" × 3/16"	2" × 2" × 3/16"	3-½"	3-½"	3-⅜"	3-⅜"	5-½"
		66"-72"	12"	0.064"-0.109"		0.052"		0.079"	½"	⅞"	32 ksi	2" × 2" × 3/16"	2" × 2" × 3/16"	3-½"	3-½"	3-⅜"	3-⅜"	5-½"
		78"-114"	12"	0.079"-0.109"		0.079"		0.109"	½"	⅞"	45 ksi	2" × 2" × 3/16"	2" × 2" × 3/16"	3-½"	3-½"	3-⅜"	3-⅜"	5-½"
HUGGER	2⅔" × ½" * REROLLED END	24"-72"	10½"	0.064"-0.109"		0.052"		0.079"	½"	⅞"	32 ksi							
		78"-84"	10½"	0.109"		0.079"		0.109"	½"	⅞"	45 ksi							

* See Note 14.

14. All profiles of Spiral Rib Pipe (¾" × ¾" ribs at 7½" pitch and ¾" × 1" ribs at 11½" pitch in both steel and aluminum and ¾" × 1" ribs at 8½" pitch in steel only) shall be manufactured with rerolled ends. Corrugation profile of the rerolled ends shall be 2⅔" × ½" annual corrugations with a minimum of two full corrugations at each end.

NOTES:

To accompany plans dated 1-4-11

1. All ferrous metal coupling band connection hardware shall be galvanized or electro-plated in accordance with the Standard Specifications.
2. For helically corrugated coupling bands, the connection angles may be oriented parallel to the pipe axis, provided connecting holes are slotted lengthwise sufficiently to allow adjustment for the helix angle.
3. Tension strap may be connected to band with either spot welds or fillet welds that develop minimum required strength of strap.
4. Use 1¼" gage line dimension on attached angle leg for rivets and spot welds.
5. Band thickness shall not be less than:
   a. 3 standard thicknesses lighter than the thickness of the pipe for Corrugated Steel Pipe.
   b. 2 standard thicknesses lighter than the thickness of the pipe and in no case lighter than 0.060" for Corrugated Aluminum Pipe.
6. Dimensions, thicknesses and strengths shown are minimum.
7. For pipe arches use same width band as for round pipe of equal periphery.
8. Fillet welds of equivalent strenght may be substituted for spot welds or rivets.
9. Spot welds shall develop minimum required strength of strap.
10. Pipe with rerolled ends having at least two 2⅔" × ½" annular corrugations at each end with or without an upturned flange may be connected with any of the annular coupling bands shown for pipe of the same diameter and wall thickness and having 2⅔" × ½" corrugations.
11. In the case of H-12 huggerbands, two piece bands are required for diameters through 96" and three piece bands are required for diameters 102" through 120".
12. Two piece bands are required for pipes greater than 42" diameter.
13. The 2¼" × 2" × 0.109" thick galvanized die-formed angle connector may be used in lieu of the 2" × 2" × 3/16" angle connector for standard joints only on pipes through 72" diameter.

STATE OF CALIFORNIA
DEPARTMENT OF TRANSPORTATION

CORRUGATED METAL PIPE COUPLING DETAILS No. 5 STANDARD JOINT

NO SCALE

RSP D97E DATED JUNE 6, 2008 SUPERSEDES STANDARD PLAN D97E
DATED MAY 1, 2006 - PAGE 187 OF THE STANDARD PLANS BOOK DATED MAY 2006.

REVISED STANDARD PLAN RSP D97E

2006 REVISED STANDARD PLAN RSP D97E

4-2-08

DIST	COUNTY	ROUTE	POST MILES TOTAL PROJECT	SHEET NO.	TOTAL SHEETS
03	ED	50	56.3/58.4	21	23

Randell D. Hiatt
REGISTERED CIVIL ENGINEER

June 6, 2008
PLANS APPROVAL DATE

REGISTERED PROFESSIONAL ENGINEER
Randell D. Hiatt
No. C50200
Exp. 6-30-09
CIVIL
STATE OF CALIFORNIA

The State of California or its officers or agents shall not be responsible for the accuracy or completeness of electronic copies of this plan sheet.

To accompany plans dated 1-4-11

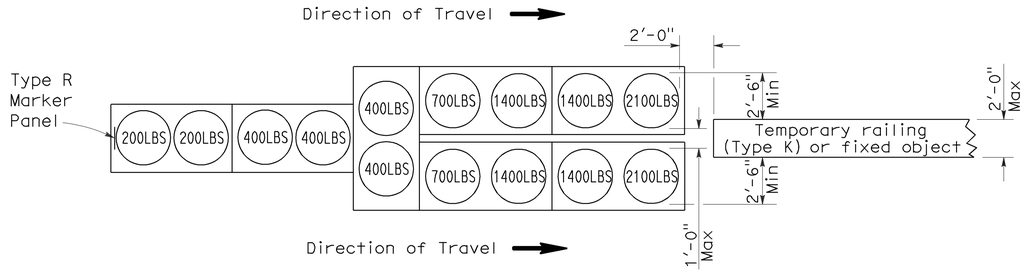

ARRAY 'TU14'

Approach speed 45 mph or more

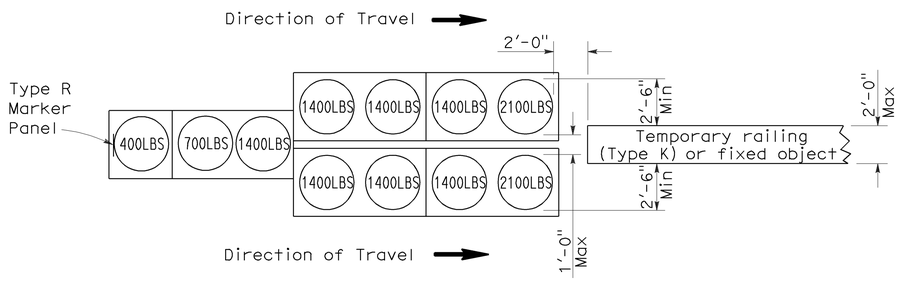

ARRAY 'TU11'

Approach speed less than 45 mph

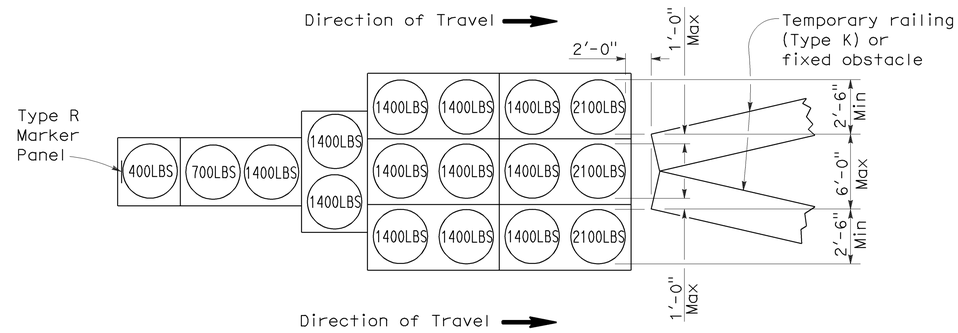

ARRAY 'TU17'

Approach speed less than 45 mph

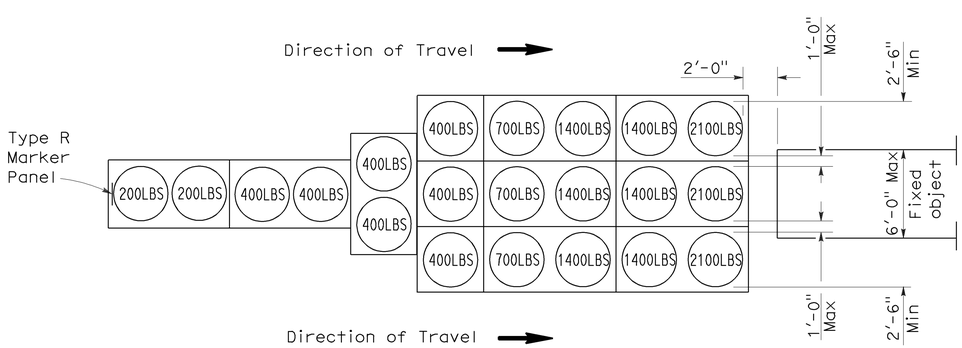

ARRAY 'TU21'

Approach speed 45 mph or more

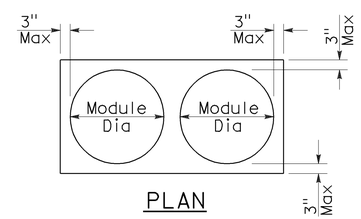

PLAN

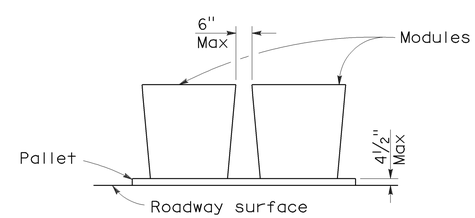

ELEVATION

CRASH CUSHION PALLET DETAIL

See Note 7

NOTES:

1. (XXX) Indicates sand filled module location and weight of sand in pounds for each module. Module spacing is based on the greater diameter of the module.
2. All sand weights are nominal.
3. Temporary crash cushion arrays shall not encroach on the traveled way.
4. Place the top of Type R marker panel 1" below the module lid.
5. Refer to Standard Plan A73B for marker details.
6. Approach speeds indicated conform to NCHRP 350 Report criteria.
7. Use of pallets is optional.

STATE OF CALIFORNIA
DEPARTMENT OF TRANSPORTATION

TEMPORARY CRASH CUSHION, SAND FILLED (UNIDIRECTIONAL)

NO SCALE

RSP T1A DATED JUNE 6, 2008 SUPERSEDES STANDARD PLAN T1A
DATED MAY 1, 2006 - PAGE 211 OF THE STANDARD PLANS BOOK DATED MAY 2006.

REVISED STANDARD PLAN RSP T1A

2006 REVISED STANDARD PLAN RSP T1A

DIST	COUNTY	ROUTE	POST MILES TOTAL PROJECT	SHEET NO.	TOTAL SHEETS
03	ED	50	56.3/58.4	22	23

Randell D. Hiatt
REGISTERED CIVIL ENGINEER

June 6, 2008
PLANS APPROVAL DATE

REGISTERED PROFESSIONAL ENGINEER
Randell D. Hiatt
No. C50200
Exp. 6-30-09
CIVIL
STATE OF CALIFORNIA

The State of California or its officers or agents shall not be responsible for the accuracy or completeness of electronic copies of this plan sheet.

To accompany plans dated 1-4-11

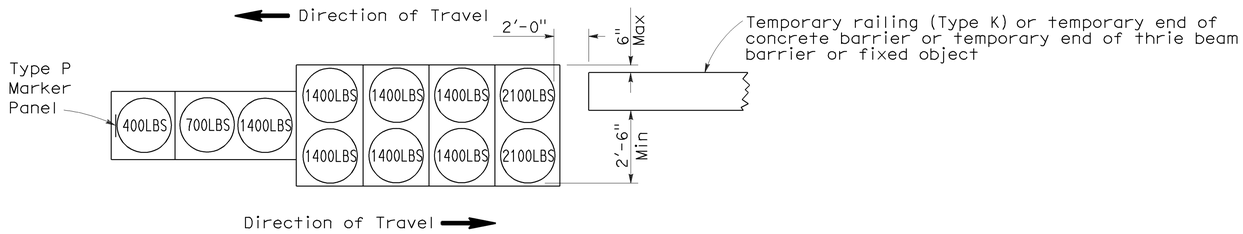

ARRAY 'TB11'

Approach speed less than 45 mph

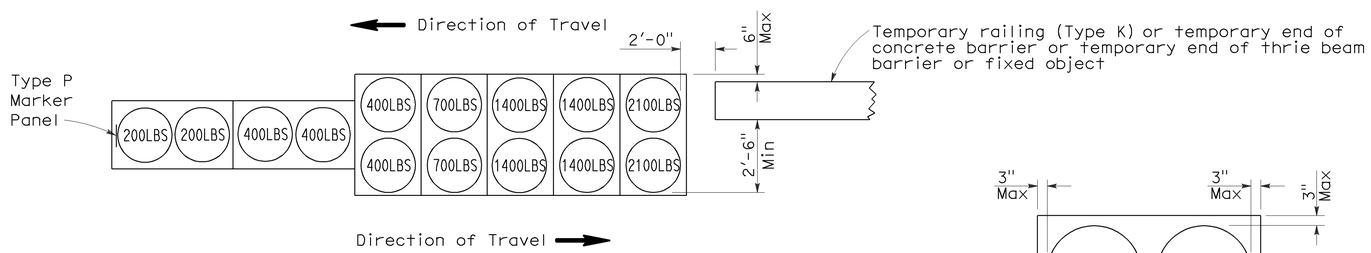

ARRAY 'TB14'

Approach speed 45 mph or more

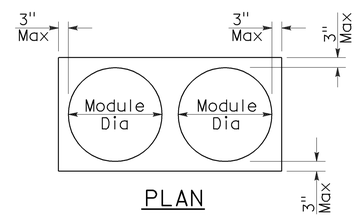

PLAN

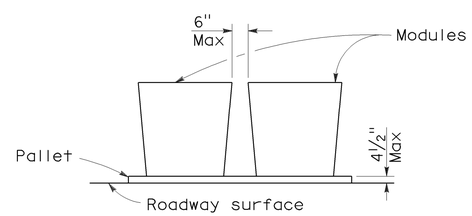

ELEVATION

CRASH CUSHION PALLET DETAIL

See Note 7

NOTES:

1. (XXX) Indicates sand filled module location and weight of sand in pounds for each module. Module spacing is based on the greater diameter of the module.
2. All sand weights are nominal.
3. Temporary crash cushion arrays shall not encroach on the traveled way.
4. Place the Type P marker panel so that the bottom of the panel rests upon the pallet.
5. Refer to Standard Plan A73B for marker details.
6. Approach speeds indicated conform to NCHRP 350 Report criteria.
7. Use of pallets is optional.

STATE OF CALIFORNIA
DEPARTMENT OF TRANSPORTATION

TEMPORARY CRASH CUSHION, SAND FILLED (BIDIRECTIONAL)

NO SCALE

RSP T1B DATED JUNE 6, 2008 SUPERSEDES STANDARD PLAN T1B
DATED MAY 1, 2006 - PAGE 212 OF THE STANDARD PLANS BOOK DATED MAY 2006.

REVISED STANDARD PLAN RSP T1B

2006 REVISED STANDARD PLAN RSP T1B

5-15-08

DIST	COUNTY	ROUTE	POST MILES TOTAL PROJECT	SHEET NO.	TOTAL SHEETS
03	ED	50	56.3/58.4	23	23

Randell D. Hiatt
REGISTERED CIVIL ENGINEER

June 6, 2008
PLANS APPROVAL DATE

REGISTERED PROFESSIONAL ENGINEER
Randell D. Hiatt
No. C50200
Exp. 6-30-09
CIVIL
STATE OF CALIFORNIA

The State of California or its officers or agents shall not be responsible for the accuracy or completeness of electronic copies of this plan sheet.

To accompany plans dated 1-4-11

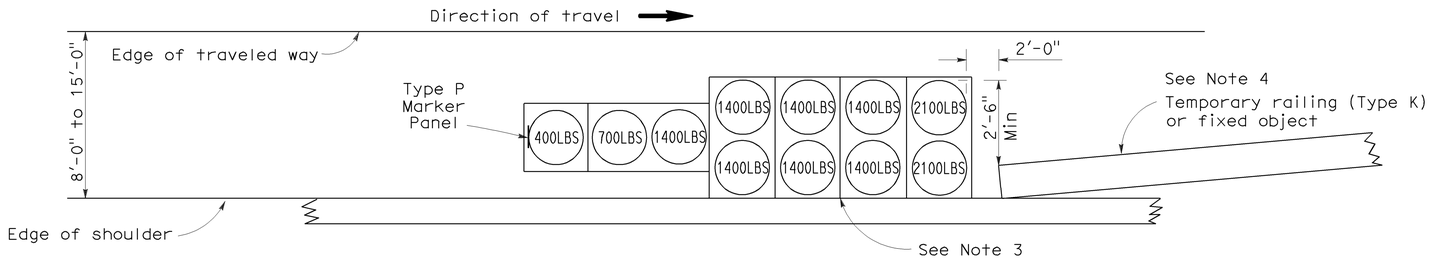

ARRAY 'TS11'

Approach speed less than 45 mph
See Note 9

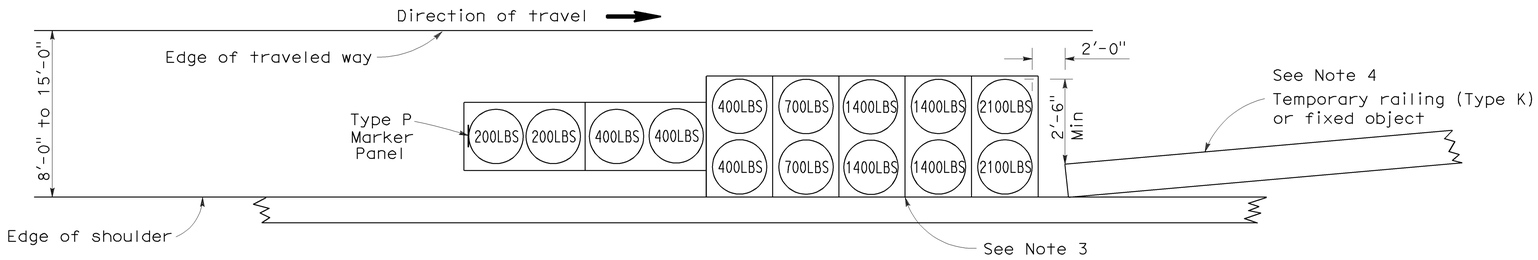

ARRAY 'TS14'

Approach speed 45 mph or more
See Note 9

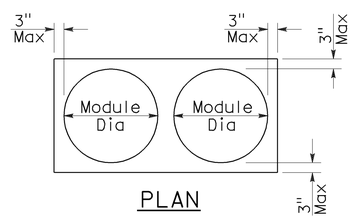

PLAN

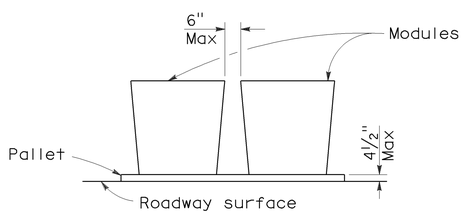

ELEVATION

CRASH CUSHION PALLET DETAIL

See Note 11

NOTES:

1. (XXX) Indicates sand filled module location and weight of sand in pounds for each module. Module spacing is based on the greater diameter of the module.
2. All sand weights are nominal.
3. The temporary crash cushion arrays shown on this plan shall be used only in locations where there will be traffic on one side of the temporary crash cushion array.
4. If the fixed object or approach end of the temporary railing is less than 15'-0" from the edge of traveled way, a temporary crash cushion is required in a construction or work zone.
5. Temporary crash cushion arrays shall not encroach on the traveled way.
6. Arrays for median shoulders shall conform to details shown on this plan for outside shoulders.
7. Place the Type P marker panel so that the bottom of the panel rests upon the pallet and faces traffic.
8. Refer to Standard Plan A73B for marker details.
9. For shoulder widths less than 8'-0", appropriate approved crash cushion protection, other than sand filled modules, shall be provided at fixed objects and at approach ends of temporary railing. The specific type of crash cushion shall be as shown on the project plans or as specified in the Special Provisions, or if not shown on the project plans or specified in the Special Provisions, shall be as approved by the Engineer.
10. Approach speeds indicated conform to NCHRP 350 Report criteria.
11. Use of pallets is optional.

STATE OF CALIFORNIA
DEPARTMENT OF TRANSPORTATION

TEMPORARY CRASH CUSHION, SAND FILLED (SHOULDER INSTALLATIONS)

NO SCALE

RSP T2 DATED JUNE 6, 2008 SUPERSEDES STANDARD PLAN T2
DATED MAY 1, 2006 - PAGE 213 OF THE STANDARD PLANS BOOK DATED MAY 2006.

REVISED STANDARD PLAN RSP T2

2006 REVISED STANDARD PLAN RSP T2

5-15-08