Dist	COUNTY	ROUTE	POST MILES TOTAL PROJECT	SHEET No.	TOTAL SHEETS
03	But,Col,ED, Gle,Pla, *etc.*	5,50,65, 70,99, *etc.*	Var	1	12

ACHSIM-0057(093)E

STATE OF CALIFORNIA
DEPARTMENT OF TRANSPORTATION

PROJECT PLANS FOR CONSTRUCTION ON
STATE HIGHWAY

IN BUTTE, COLUSA, EL DORADO, GLENN, PLACER, SACRAMENTO, YOLO, AND YUBA COUNTIES AT VARIOUS LOCATIONS

TO BE SUPPLEMENTED BY STANDARD PLANS DATED MAY 2006

INDEX OF PLANS

SHEET No.	DESCRIPTION
1	TITLE AND LOCATION MAP
2-5	CONSTRUCTION DETAILS
6	SUMMARY OF QUANTITIES
7-12	REVISED STANDARD PLANS

THE STANDARD PLANS LIST APPLICABLE TO THIS CONTRACT IS INCLUDED IN THE NOTICE TO BIDDERS AND SPECIAL PROVISIONS BOOK.

LOCATIONS OF CONSTRUCTION

No.	COUNTY	ROUTE	PM	No.	COUNTY	ROUTE	PM
1	Gle	5	1.5	38	Yol	5	21.4
2	Gle	5	5.6	39	Yol	5	22.6
3	Gle	5	7.6	40	Yol	5	22.9
4	Gle	5	9.9	41	Yol	5	23.8
5	Gle	5	10.9	42	Yol	5	25.6
6	Gle	5	13.9	43	Yol	5	26.6
7	Gle	5	15.9	44	Yol	5	27.8
8	Gle	5	16.8	45	Sac	5	2.1
9	Gle	5	19.8	46	Sac	5	3.1
10	Gle	5	20.8	47	Sac	5	8.5
11	Gle	5	21.8	48	Sac	5	10.8
12	Gle	5	22.8	49	ED	50	14.0
13	Gle	5	23.8	50	Pla	65	11.9
14	Gle	5	24.8	51	Yub	65	6.9
15	Gle	5	25.5	52	Yub	65	8.0
16	Gle	5	27.8	53	Yub	70	7.3
17	Gle	5	28.6	54	But	99	36.3
18	Col	5	2.3	55	Yol	113	0.9
19	Col	5	3.1	56	Yol	113	1.1
20	Col	5	10.3	57	Yol	113	1.8
21	Col	5	13.7	58	Yol	113	2.1
22	Col	5	15.9	59	Yol	113	4.1
23	Col	5	18.0	60	Yol	113	6.1
24	Col	5	18.7	61	Yol	113	7.7
25	Col	5	22.7	62	Yol	113	9.2
26	Col	5	24.7	63	Yol	113	9.6
27	Col	5	26.7	64	Yol	505	0.4
28	Col	5	31.8	65	Yol	505	2.5
29	Yol	5	7.2	66	Yol	505	4.0
30	Yol	5	7.7	67	Yol	505	6.5
31	Yol	5	9.4	68	Yol	505	7.5
32	Yol	5	10.8	69	Yol	505	9.5
33	Yol	5	12.3	70	Yol	505	10.6
34	Yol	5	14.3	71	Yol	505	13.4
35	Yol	5	15.8	72	Yol	505	15.6
36	Yol	5	17.6	73	Yol	505	17.5
37	Yol	5	19.0				

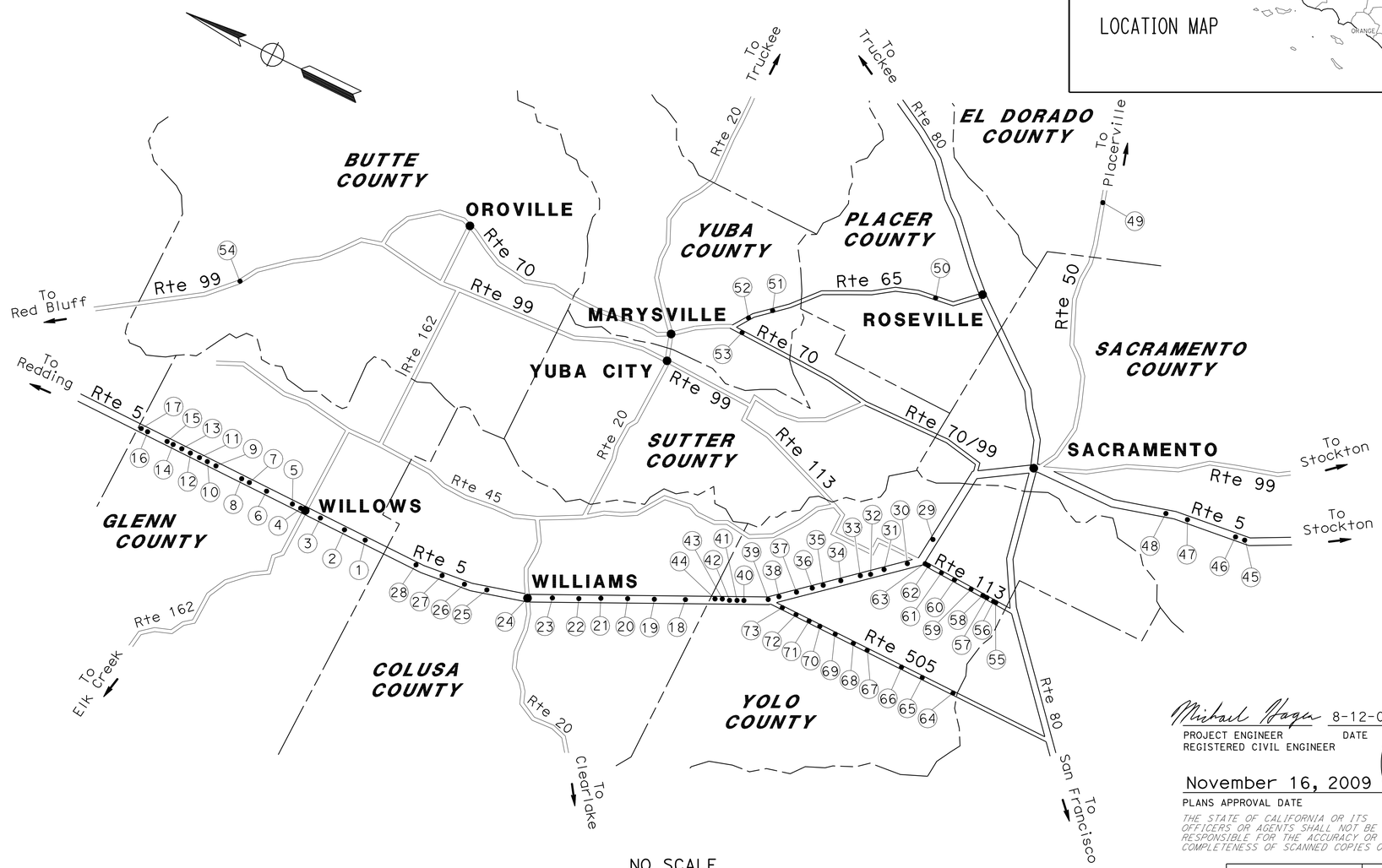

NO SCALE

THE CONTRACTOR SHALL POSSESS THE CLASS (OR CLASSES) OF LICENSE AS SPECIFIED IN THE "NOTICE TO BIDDERS."

PROJECT MANAGER MARTIN VILLANUEVA

DESIGN ENGINEER ROBERT PETERSON

Mikael Hagen 8-12-09
PROJECT ENGINEER DATE
REGISTERED CIVIL ENGINEER

REGISTERED PROFESSIONAL ENGINEER MIKE HAGEN No. 59820 Exp. 12/31/09 CIVIL STATE OF CALIFORNIA

November 16, 2009
PLANS APPROVAL DATE

THE STATE OF CALIFORNIA OR ITS OFFICERS OR AGENTS SHALL NOT BE RESPONSIBLE FOR THE ACCURACY OR COMPLETENESS OF SCANNED COPIES OF THIS PLAN SHEET.

LAST REVISION 08-10-09 DATE PLOTTED => 02-MAR-2010 TIME PLOTTED => 11:10

CONTRACT No. **03-4A5304**

Dist	COUNTY	ROUTE	POST MILES TOTAL PROJECT	SHEET No.	TOTAL SHEETS
03	But,Col,ED, Gle,Pla,*etc.*	5,50,65, 70,99,*etc.*	Var	2	12

Michael Hagen 8-12-09
REGISTERED CIVIL ENGINEER DATE

11-16-09
PLANS APPROVAL DATE

REGISTERED PROFESSIONAL ENGINEER
MIKE HAGEN
No. 59820
Exp. 12/31/09
CIVIL
STATE OF CALIFORNIA

THE STATE OF CALIFORNIA OR ITS OFFICERS OR AGENTS SHALL NOT BE RESPONSIBLE FOR THE ACCURACY OR COMPLETENESS OF SCANNED COPIES OF THIS PLAN SHEET.

NOTES:

1. FOR DETAILS NOT SHOWN, SEE STANDARD PLANS RSP A77G1.
2. FOR WEED CONTROL MAT (RUBBER) DETAILS, SEE SHEET C-4.
3. EXISTING UTILITY FACILITIES HAVE NOT BEEN LOCATED.

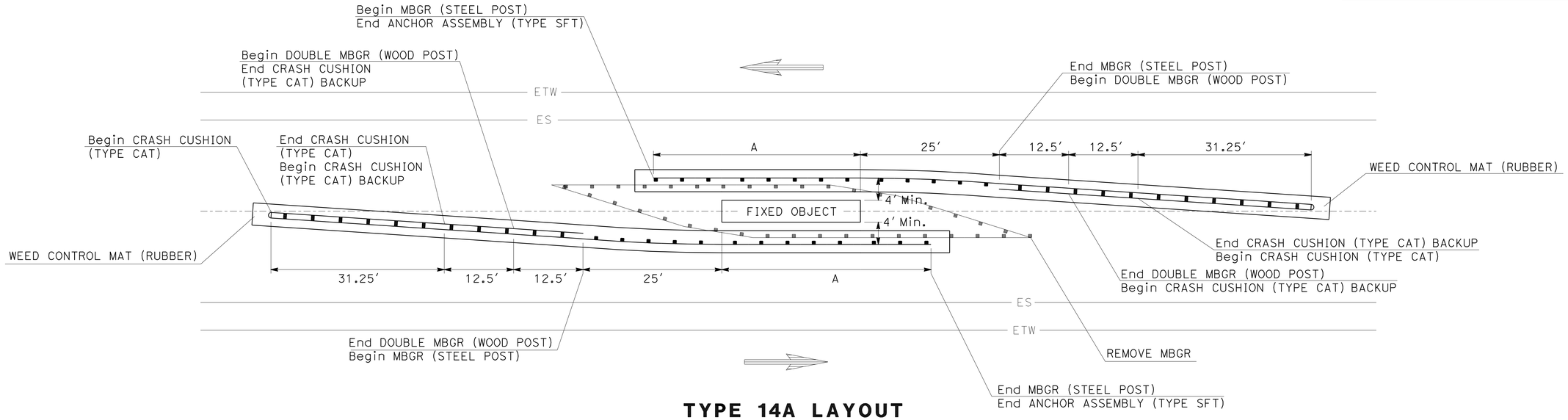

TYPE 14A LAYOUT

FLARED LOCATIONS

LOCATION	COUNTY	Rte	PM	A FT	LOCATION	COUNTY	Rte	PM	A FT	LOCATION	COUNTY	Rte	PM	A FT
1	Gle	5	1.5	25	25	Col	5	22.7	25	45	Sac	5	2.1	25
2	Gle	5	5.6	25	26	Col	5	24.7	25	46	Sac	5	3.1	25
3	Gle	5	7.6	37.5	27	Col	5	26.7	25	47	Sac	5	8.5	25
4	Gle	5	9.9	37.5	28	Col	5	31.8	50	48	Sac	5	10.8	50
5	Gle	5	10.9	37.5	30	Yol	5	7.7	25	50	Pla	65	11.9	75
7	Gle	5	15.9	37.5	31	Yol	5	9.4	25	51	Yub	65	6.9	50
8	Gle	5	16.8	37.5	32	Yol	5	10.8	62.5	52	Yub	65	8.0	50
9	Gle	5	19.8	37.5	33	Yol	5	12.3	25	54	But	99	36.3	50
12	Gle	5	22.8	37.5	34	Yol	5	14.3	25	56	Yol	113	1.1	87.5
15	Gle	5	25.5	50	35	Yol	5	15.8	25	58	Yol	113	2.1	100
16	Gle	5	27.8	37.5	36	Yol	5	17.6	25	59	Yol	113	4.1	37.5
17	Gle	5	28.6	37.5	37	Yol	5	19.0	25	62	Yol	113	9.2	50
18	Col	5	2.3	25	38	Yol	5	21.4	25	63	Yol	113	9.6	50
19	Col	5	3.1	25	39	Yol	5	22.6	25	64	Yol	505	0.4	37.5
20	Col	5	10.3	25	40	Yol	5	22.9	62.5	69	Yol	505	9.5	37.5
21	Col	5	13.7	25	41	Yol	5	23.8	25					
22	Col	5	15.9	62.5	42	Yol	5	25.6	25					
23	Col	5	18.0	50	43	Yol	5	26.6	25					
24	Col	5	18.7	50	44	Yol	5	27.8	25					

CONSTRUCTION DETAILS

NO SCALE

C-1

REVISED BY | DATE REVISED
MIKE HAGEN | ROBERT PETERSON
CALCULATED-DESIGNED BY | CHECKED BY
FUNCTIONAL SUPERVISOR
ROBERT PETERSON
STATE OF CALIFORNIA - DEPARTMENT OF TRANSPORTATION
Caltrans
TRAFFIC SAFETY

LAST REVISION 07-30-09 | DATE PLOTTED => 17-NOV-2009 | TIME PLOTTED => 08:56

Dist	COUNTY	ROUTE	POST MILES TOTAL PROJECT	SHEET No.	TOTAL SHEETS
03	But,Col,ED, Gle,Pla,*etc.*	5,50,65, 70,99,*etc.*	Var	3	12

Michael Hagen 8-12-09
REGISTERED CIVIL ENGINEER DATE

11-16-09
PLANS APPROVAL DATE

REGISTERED PROFESSIONAL ENGINEER MIKE HAGEN No. 59820 Exp. 12/31/09 CIVIL STATE OF CALIFORNIA

THE STATE OF CALIFORNIA OR ITS OFFICERS OR AGENTS SHALL NOT BE RESPONSIBLE FOR THE ACCURACY OR COMPLETENESS OF SCANNED COPIES OF THIS PLAN SHEET.

NOTES:

1. FOR DETAILS NOT SHOWN, SEE STANDARD PLANS RSP A77G1.
2. FOR WEED CONTROL MAT (RUBBER) DETAILS, SEE SHEET C-4.
3. EXISTING UTILITY FACILITIES HAVE NOT BEEN LOCATED.

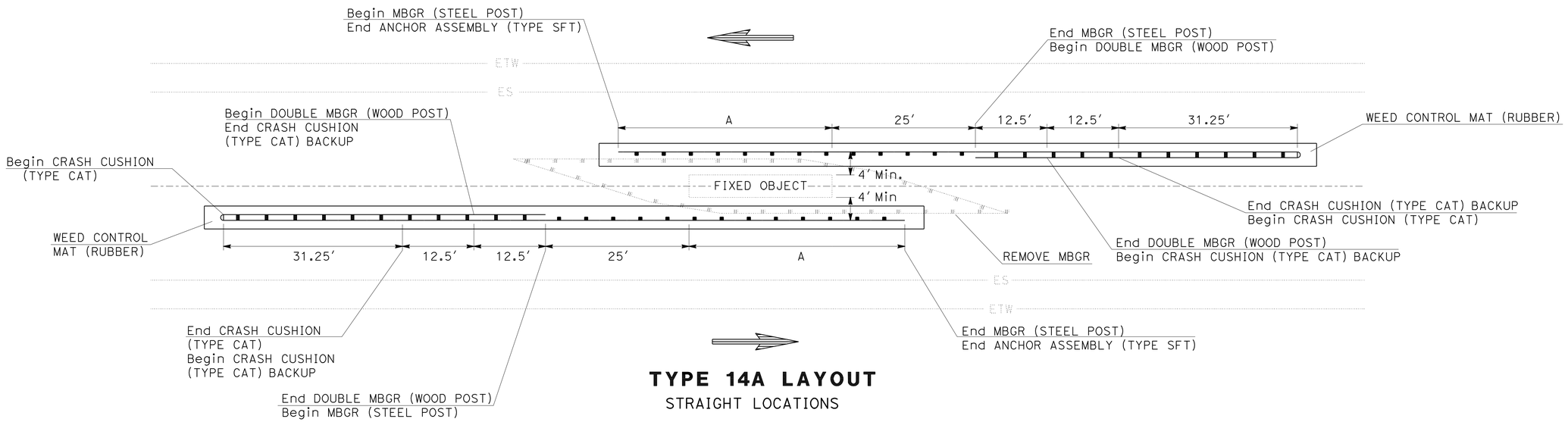

TYPE 14A LAYOUT

STRAIGHT LOCATIONS

LOCATION	COUNTY	Rte	PM	A
				FT
6	Gle	5	13.9	37.5
10	Gle	5	20.8	37.5
11	Gle	5	21.8	37.5
13	Gle	5	23.8	37.5
14	Gle	5	24.8	37.5
54	Yub	70	7.3	50
65	Yol	505	2.5	37.5
66	Yol	505	4.0	37.5
67	Yol	505	6.5	37.5
68	Yol	505	7.5	37.5
70	Yol	505	10.6	37.5

CONSTRUCTION DETAILS

NO SCALE

C-2

REVISED BY | DATE REVISED

MIKE HAGEN | ROBERT PETERSON

CALCULATED-DESIGNED BY | CHECKED BY

FUNCTIONAL SUPERVISOR: ROBERT PETERSON

STATE OF CALIFORNIA - DEPARTMENT OF TRANSPORTATION

Caltrans® TRAFFIC SAFETY

LAST REVISION 08-11-09 | DATE PLOTTED => 17-NOV-2009 | TIME PLOTTED => 08:56

Dist	COUNTY	ROUTE	POST MILES TOTAL PROJECT	SHEET No.	TOTAL SHEETS
03	But,Col,ED, Gle,Pla, *etc.*	5,50,65, 70,99, *etc.*	Var	4	12

Michael Hagen 8-12-09
REGISTERED CIVIL ENGINEER DATE

11-16-09
PLANS APPROVAL DATE

REGISTERED PROFESSIONAL ENGINEER
MIKE HAGEN
No. 59820
Exp. 12/31/09
CIVIL
STATE OF CALIFORNIA

THE STATE OF CALIFORNIA OR ITS OFFICERS OR AGENTS SHALL NOT BE RESPONSIBLE FOR THE ACCURACY OR COMPLETENESS OF SCANNED COPIES OF THIS PLAN SHEET.

NOTES:

1. FOR DETAILS NOT SHOWN, SEE STANDARD PLANS RSP A77G1.
2. FOR WEED CONTROL MAT (RUBBER) DETAILS, SEE SHEET C-4.
3. EXISTING UTILITY FACILITIES HAVE NOT BEEN LOCATED.

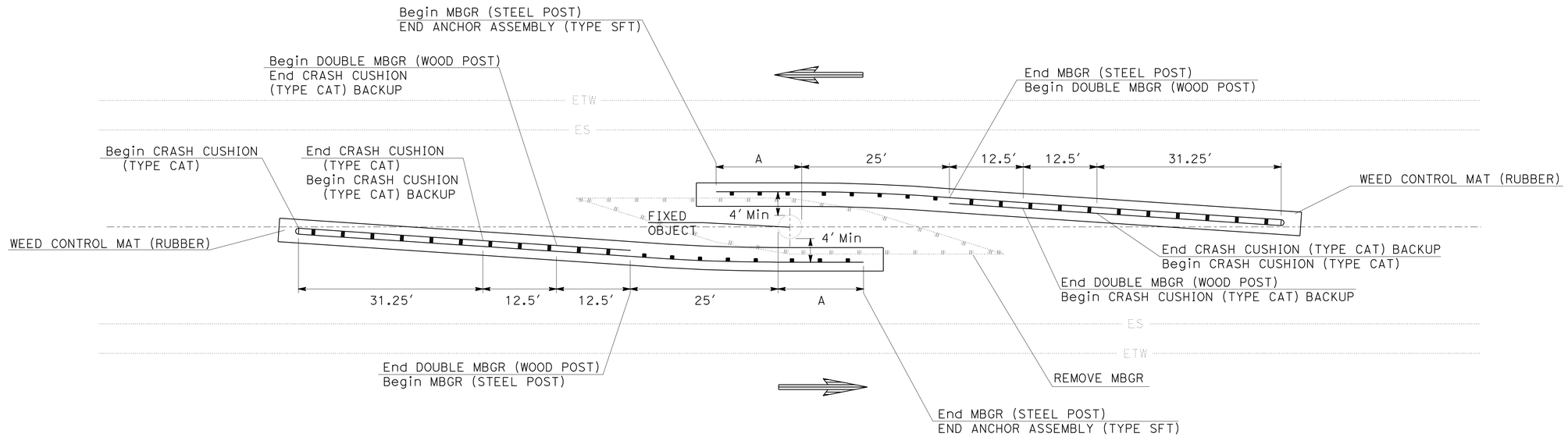

TYPE 14A LAYOUT

FLARED LOCATIONS

LOCATION	COUNTY	Rte	PM	A
				FT
29	Yol	5	7.2	25
49	ED	50	14.0	25
55	Yol	113	0.9	12.5
57	Yol	113	1.8	12.5
60	Yol	113	6.1	12.5
61	Yol	113	7.7	12.5
71	Yol	505	13.4	12.5
72	Yol	505	15.6	12.5
73	Yol	505	17.5	12.5

CONSTRUCTION DETAILS

NO SCALE

C-3

REVISED BY | DATE REVISED
MIKE HAGEN | ROBERT PETERSON
CALCULATED-DESIGNED BY | CHECKED BY
FUNCTIONAL SUPERVISOR
ROBERT PETERSON

STATE OF CALIFORNIA - DEPARTMENT OF TRANSPORTATION
Caltrans
TRAFFIC SAFETY

LAST REVISION 07-30-09 | DATE PLOTTED => 17-NOV-2009 | TIME PLOTTED => 08:56

Dist	COUNTY	ROUTE	POST MILES TOTAL PROJECT	SHEET NO.	TOTAL SHEETS
03	But,Col,ED, Gle,Pla, *etc.*	5,50,65, 70,99, *etc.*	Var	5	12

Michael Hagen 8-12-09
REGISTERED CIVIL ENGINEER DATE

11-16-09
PLANS APPROVAL DATE

REGISTERED PROFESSIONAL ENGINEER
MIKE HAGEN
No. 59820
Exp. 12/31/09
CIVIL
STATE OF CALIFORNIA

THE STATE OF CALIFORNIA OR ITS OFFICERS OR AGENTS SHALL NOT BE RESPONSIBLE FOR THE ACCURACY OR COMPLETENESS OF SCANNED COPIES OF THIS PLAN SHEET.

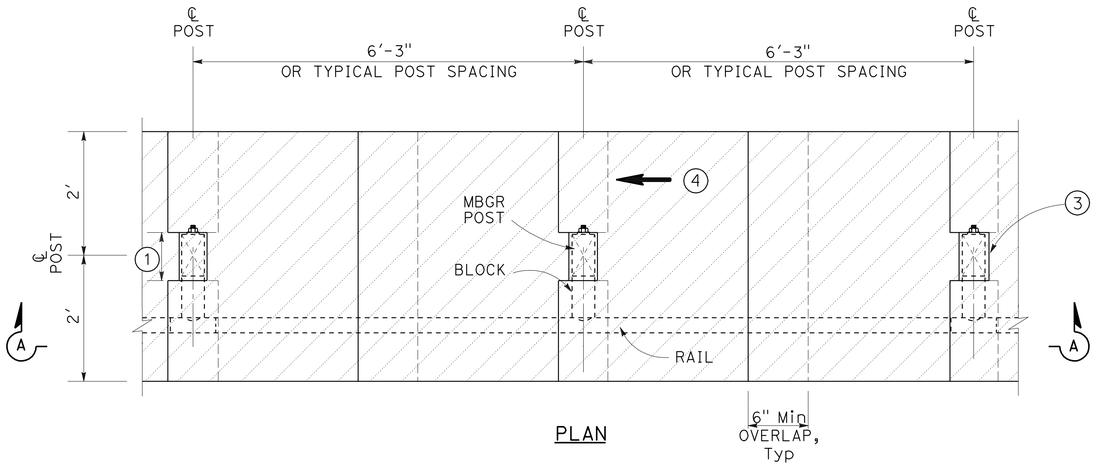

PLAN

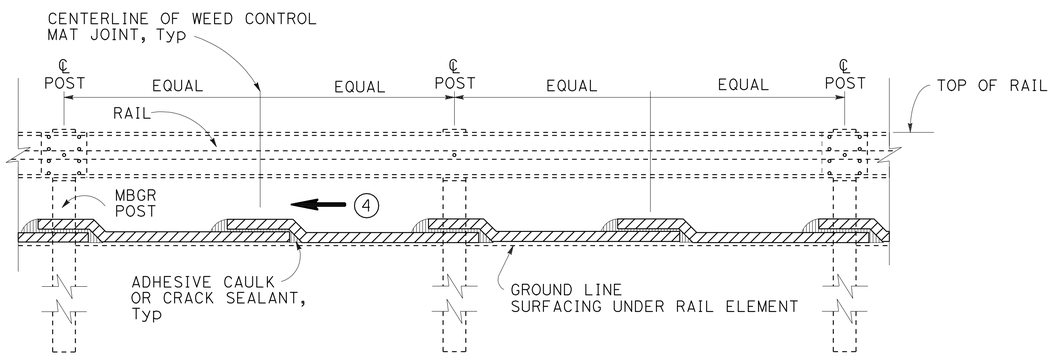

SECTION A-A

WEED CONTROL MAT (RUBBER) UNDER MBGR

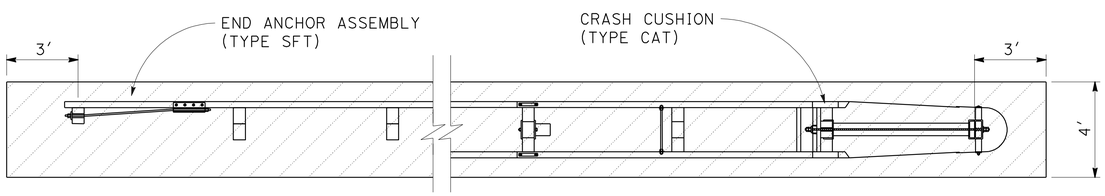

WEED CONTROL MAT (RUBBER) AT MBGR END

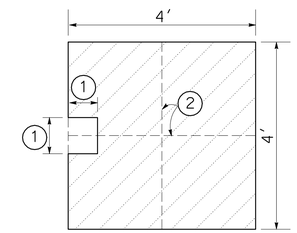

PLAN

WEED CONTROL MAT (RUBBER) TYPICAL TILE SECTION

LEGEND:

WEED CONTROL MAT (RUBBER)

NOTES:

1. CUTOUT DIMENSIONS TO FIT SNUGLY AROUND WOOD OR METAL POST FOR MBGR.
2. WEED CONTROL MAT (RUBBER) TILE MAY BE COMPRISED OF FOUR - 24" x 24" TILE MATS.
3. TRIM WEED CONTROL MAT (RUBBER) FLUSH WITH ADJACENT STRUCTURES. FILL JOINTS AND OPENINGS WITH ADHESIVE CAULKING OR CRACK SEALANT.
4. LAP WEED CONTROL MAT IN DIRECTION OF WATER FLOW.

CONSTRUCTION DETAILS

NO SCALE

C-4

STATE OF CALIFORNIA - DEPARTMENT OF TRANSPORTATION
Caltrans
TRAFFIC SAFETY

FUNCTIONAL SUPERVISOR: ROBERT PETERSON
CALCULATED-DESIGNED BY: MIKE HAGEN
CHECKED BY: ROBERT PETERSON
REVISED BY
DATE REVISED

LAST REVISION 07-01-09
DATE PLOTTED => 17-NOV-2009
TIME PLOTTED => 08:56

Dist	COUNTY	ROUTE	POST MILES TOTAL PROJECT	SHEET NO.	TOTAL SHEETS
03	But,Col,ED, Gle,Pla, *etc.*	5,50,65, 70,99, *etc.*	Var	6	12

Michael Hagen 8-12-09
REGISTERED CIVIL ENGINEER DATE

11-16-09
PLANS APPROVAL DATE

REGISTERED PROFESSIONAL ENGINEER
MIKE HAGEN
No. 59820
Exp. 12/31/09
CIVIL
STATE OF CALIFORNIA

THE STATE OF CALIFORNIA OR ITS OFFICERS OR AGENTS SHALL NOT BE RESPONSIBLE FOR THE ACCURACY OR COMPLETENESS OF SCANNED COPIES OF THIS PLAN SHEET.

METAL BEAM GUARD RAIL

LOCATION No.	LOCATION	COUNTY	Rte	PM	METAL BEAM GUARD RAILING (STEEL POST)	DOUBLE METAL BEAM GUARD RAILING (WOOD POST)	END ANCHOR ASSEMBLY (TYPE SFT)	CRASH CUSHION (TYPE CAT)	CRASH CUSHION (TYPE CAT) BACKUP	REMOVE MBGR	(N) REMOVE TERMINAL SECTION	WEED CONTROL MAT (RUBBER)	CLEARING AND GRUBBING
					LF	LF	EA	EA	EA	LF	EA	SQYD	ACRE
1	CO Rd 68 OC (Br No. 11-83)	Gle	5	1.5	100	25	2	2	2	175	2	100	
2	CO Rd 60 OC (Br No. 11-82)	Gle	5	5.6	100	25	2	2	2	175	2	100	
3	CO Rd 57 OC (Br No. 11-80)	Gle	5	7.6	125	25	2	2	2	175	2	111	0.014
4	RTE 162/5 SEP (Br No. 11-56)	Gle	5	9.9	125	25	2	2	2	175	2	111	0.017
5	CO Rd 48 OC (Br No. 11-55)	Gle	5	10.9	125	25	2	2	2	175	2	111	0.016
6	BLUE GUM OC (Br No. 11-54)	Gle	5	13.9	125	25	2	2	2	175	2	111	0.016
7	CO Rd 35 OC (Br No. 11-62)	Gle	5	15.9	125	25	2	2	2	175	2	111	0.015
8	CO Rd 33 OC (Br No. 11-64)	Gle	5	16.8	125	25	2	2	2	175	2	111	0.015
9	CO Rd 28 OC (Br No. 11-76)	Gle	5	19.8	125	25	2	2	2	175	2	111	0.014
10	CO Rd 27 OC (Br No. 11-67)	Gle	5	20.8	125	25	2	2	2	175	2	111	0.013
11	CO Rd 25 OC (Br No. 11-68)	Gle	5	21.8	125	25	2	2	2	175	2	111	0.015
12	CO Rd 24 OC (Br No. 11-69)	Gle	5	22.8	125	25	2	2	2	175	2	111	0.014
13	CO Rd 20 OC (Br No. 11-70)	Gle	5	23.8	125	25	2	2	2	175	2	111	0.015
14	CO Rd 16 OC (Br No. 11-74)	Gle	5	24.8	125	25	2	2	2	200	2	111	0.015
15	RTE 32/5 SEP (Br No. 11-77)	Gle	5	25.5	150	25	2	2	2	200	2	122	0.017
16	CO Rd 7 OC (Br No. 11-75)	Gle	5	27.8	125	25	2	2	2	200	2	111	0.015
17	CO Rd 3 OC (Br No. 11-73)	Gle	5	28.6	125	25	2	2	2	175	2	111	0.018
18	HARRINGTON Rd OC (Br No. 15-59)	Col	5	2.3	100	25	2	2	2	200	2	100	
19	GREENBAY Rd OC (Br No. 15-60)	Col	5	3.1	100	25	2	2	2	200	2	100	
20	HAHN Rd OC (Br No. 15-61)	Col	5	10.3	100	25	2	2	2	200	2	100	
21	MEYERS Rd OC (Br No. 15-63)	Col	5	13.7	100	25	2	2	2	200	2	100	
22	HUSTED Rd OC (Br No. 15-68)	Col	5	15.9	175	25	2	2	2	250	2	133	
23	E St OC (Br No. 15-67)	Col	5	18.0	150	25	2	2	2	200	2	122	
24	ROUTE 20/5 Sep (Br No. 15-78)	Col	5	18.7	150	25	2	2	2	200	2	122	
25	LURLINE Ave OC (Br No. 15-75)	Col	5	22.7	100	25	2	2	2	200	2	100	
26	FAIRVIEW Rd OC (Br No. 15-76)	Col	5	24.7	100	25	2	2	2	200	2	100	
27	MAXWELL-COLUSA OC (Br No. 15-70)	Col	5	26.7	150	25	2	2	2	200	2	122	
28	DELEVAN Rd OC (Br No. 15-58)	Col	5	31.8	100	25	2	2	2	175	2	100	
29	OH SIGN	Yol	5	7.2	100	25	2	2	2	150	2	100	
30	KENTUCKY Ave OC (Br No. 22-148)	Yol	5	7.7	100	25	2	2	2	150	2	100	
31	CO Rd 99 OC (Br No. 22-150)	Yol	5	9.4	175	25	2	2	2	225	2	133	
32	CO Rd 98 OC (Br No. 22-151)	Yol	5	10.8	100	25	2	2	2	150	2	100	
33	YOLO OC (Br No. 22-159)	Yol	5	12.3	100	25	2	2	2	150	2	100	
34	CO Rd 96 OC (Br No. 22-155)	Yol	5	14.3	100	25	2	2	2	175	2	100	
35	CO Rd 95 OC (Br No. 22-156)	Yol	5	15.8	100	25	2	2	2	175	2	100	
36	ZAMORA Rd OC (Br No. 22-157)	Yol	5	17.6	100	25	2	2	2	150	2	100	
37	CO Rd 12 OC (Br No. 22-153)	Yol	5	19.0	100	25	2	2	2	150	2	100	
38	CO Rd 91 OC (Br No. 22-145)	Yol	5	21.4	100	25	2	2	2	150	2	100	
			SUBTOTAL		4500	950	76	76	76	6900	76	4108	0.229

LOCATION No.	LOCATION	COUNTY	Rte	PM	METAL BEAM GUARD RAILING (STEEL POST)	DOUBLE METAL BEAM GUARD RAILING (WOOD POST)	END ANCHOR ASSEMBLY (TYPE SFT)	CRASH CUSHION (TYPE CAT)	CRASH CUSHION (TYPE CAT) BACKUP	REMOVE MBGR	(N) REMOVE TERMINAL SECTION	WEED CONTROL MAT (RUBBER)	CLEARING AND GRUBBING
					LF	LF	EA	EA	EA	LF	EA	SQYD	ACRE
39	ROUTE 505/5 Sep (Br No. 22-143)	Yol	5	22.6	175	25	2	2	2	275	2	133	
40	OH SIGN	Yol	5	22.9	100	25	2	2	2	150	2	100	
41	CO Rd 8 OC (Br No. 22-30)	Yol	5	23.8	100	25	2	2	2	150	2	100	
42	CO Rd 6 OC (Br No. 22-138)	Yol	5	25.6	100	25	2	2	2	150	2	100	
43	CO Rd 4 OC (Br No. 22-133)	Yol	5	26.6	100	25	2	2	2	150	2	100	
44	CO Rd 2 OC (Br No. 22-134)	Yol	5	27.8	100	25	2	2	2	150	2	100	
45	TWIN CITIES Rd OC (Br No. 24-284)	Sac	5	2.1	100	25	2	2	2	150	2	100	
46	DIERSSEN Rd OC (Br No. 24-280)	Sac	5	3.1	100	25	2	2	2	150	2	100	
47	HOOD-FRANKLIN Rd OC (Br No. 24-326)	Sac	5	8.5	100	25	2	2	2	150	2	100	
48	ELK GROVE Blvd OC (Br No. 24-277)	Sac	5	10.8	150	25	2	2	2	200	2	122	
49	EL DORADO Rd OC (Br No. 25-76)	ED	50	14.0	100	25	2	2	2	150	2	100	
50	TWELVE BRIDGES OC (Br No. 19-173)	Pla	65	11.9	200	25	2	2	2	250	2	144	
51	FORTY MILE Rd OC (Br No. 16-44)	Yub	65	6.9	150	25	2	2	2	225	2	122	
52	MCGOWAN Rd OC (Br No. 16-47)	Yub	65	8.0	150	25	2	2	2	225	2	122	
53	MCGOWAN Rd OC (Br No. 16-41)	Yub	70	7.3	150	25	2	2	2	200	2	122	
54	EATON Rd OC BR (Br No. 12-160)	But	99	36.3	150	25	2	2	2	225	2	122	0.013
55	UCD CYCLIST OC (Br No. 22-178)	Yol	113	0.9	75	25	2	2	2	150	2	89	
56	RUSSELL Blvd OC (Br No. 22-71)	Yol	113	1.1	225	25	2	2	2	300	2	155	
57	SYCAMORE PK CYC OC (Br No. 22-179)	Yol	113	1.8	75	25	2	2	2	150	2	89	
58	CO Rd 31 OC (Br No. 22-120W)	Yol	113	2.1	250	25	2	2	2	300	2	166	
59	CO Rd 29 OC (Br No. 22-121)	Yol	113	4.1	125	25	2	2	2	175	2	111	
60	CO Rd 27 OC (Br No. 22-122)	Yol	113	6.1	75	25	2	2	2	150	2	89	
61	CO Rd 25 OC (Br No. 22-127)	Yol	113	7.7	75	25	2	2	2	150	2	89	
62	GIBSON Rd OC (Br No. 22-128)	Yol	113	9.2	150	25	2	2	2	250	2	122	
63	GUM Ave OC (Br No. 22-192)	Yol	113	9.6	150	25	2	2	2	225	2	122	
64	128W/505 SEP 2 (Br No. 22-110)	Yol	505	0.4	125	25	2	2	2	200	2	111	
65	CO Rd 31 OC (Br No. 22-160)	Yol	505	2.5	125	25	2	2	2	200	2	111	
66	CO Rd 29A OC (Br No. 22-161)	Yol	505	4.0	125	25	2	2	2	200	2	111	
67	CO Rd 27 OC (Br No. 22-162)	Yol	505	6.5	125	25	2	2	2	200	2	111	
68	CO Rd 26 OC (Br No. 22-163)	Yol	505	7.5	125	25	2	2	2	200	2	111	
69	CO Rd 24 OC (Br No. 22-164)	Yol	505	9.5	125	25	2	2	2	200	2	111	
70	JCT 16 16/505 SEP (Br No. 22-111)	Yol	505	10.6	125	25	2	2	2	200	2	111	
71	CO Rd 19 OC (Br No. 22-165)	Yol	505	13.4	75	25	2	2	2	150	2	89	
72	CO Rd 16 OC (Br No. 22-168)	Yol	505	15.6	75	25	2	2	2	150	2	89	
73	CO Rd 14 OC (Br No. 22-167)	Yol	505	17.5	75	25	2	2	2	150	2	89	
			SUBTOTAL		4325	875	70	70	70	6650	70	3863	0.013
			TOTAL		8825	1825	146	146	146	13,550	146	7971	0.242

(N) - NOT A SEPARATE PAY ITEM, FOR INFORMATION ONLY.

SUMMARY OF QUANTITIES

Q-1

MIKE HAGEN — REVISED BY
ROBERT PETERSON — DATE REVISED
CALCULATED-DESIGNED BY
CHECKED BY
FUNCTIONAL SUPERVISOR
ROBERT PETERSON

STATE OF CALIFORNIA - DEPARTMENT OF TRANSPORTATION
Caltrans®
TRAFFIC SAFETY

LAST REVISION 07-31-09
DATE PLOTTED => 17-NOV-2009
TIME PLOTTED => 08:57

DIST	COUNTY	ROUTE	POST MILES TOTAL PROJECT	SHEET NO.	TOTAL SHEETS
03	But,Col,ED, Gle,Pla, *etc.*	5,50,65, 70,99, *etc.*	Var	7	12

Randell D. Hiatt
REGISTERED CIVIL ENGINEER

June 6, 2008
PLANS APPROVAL DATE

REGISTERED PROFESSIONAL ENGINEER
Randell D. Hiatt
No. C50200
Exp. 6-30-09
CIVIL
STATE OF CALIFORNIA

The State of California or its officers or agents shall not be responsible for the accuracy or completeness of electronic copies of this plan sheet.

To accompany plans dated 11-16-09

NOTES:

1. When necessary to place dike in front of face of guard railing, only Type C dike may be used. For dike details, see Standard Plan A87B.
2. For standard railing post embedment, see Standard Plans A77C3.
3. Guard railing delineation to be used where shown on the Project Plans.
4. When dike or curb is placed under guard railing, the maximum height of the dike or curb shall be 4". Mountable dike should not be used. For dike and curb details, see Revised Standard Plans RSP A87A and Standard Plan A87B.
5. For details of typical distance between the face of rail and hinge point, see Standard Plan A77C3.

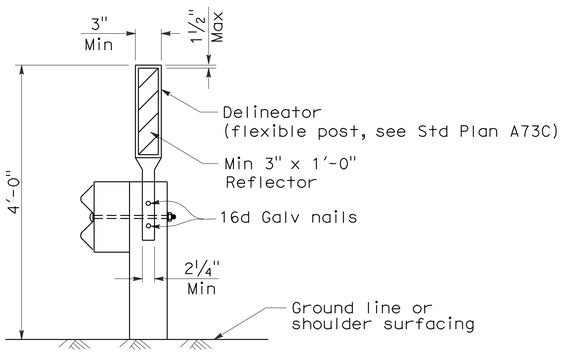

GUARD RAILING DELINEATION

See Note 3

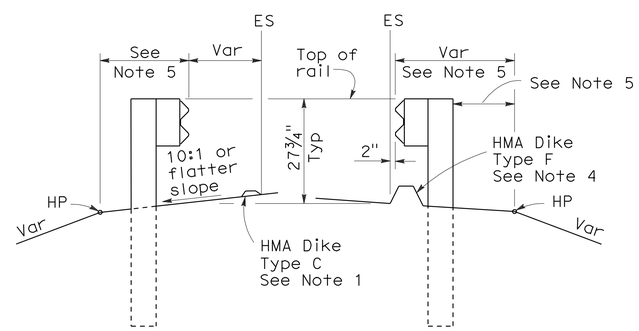

DIKE POSITIONING

See Note 1

STATE OF CALIFORNIA
DEPARTMENT OF TRANSPORTATION

METAL BEAM GUARD RAILING TYPICAL RAILING DELINEATION AND DIKE POSITIONING DETAILS

NO SCALE

RSP A77C4 DATED JUNE 6, 2008 SUPERSEDES STANDARD PLAN A77C4
DATED MAY 1, 2006 - PAGE 47 OF THE STANDARD PLANS BOOK DATED MAY 2006.

REVISED STANDARD PLAN RSP A77C4

2006 REVISED STANDARD PLAN RSP A77C4

12-10-07

DIST	COUNTY	ROUTE	POST MILES TOTAL PROJECT	SHEET NO.	TOTAL SHEETS
03	But,Col,ED, Gle,Pla, *etc.*	5,50,65, 70,99, *etc.*	Var	8	12

Randell D. Hiatt
REGISTERED CIVIL ENGINEER

June 6, 2008
PLANS APPROVAL DATE

REGISTERED PROFESSIONAL ENGINEER Randell D. Hiatt No. C50200 Exp. 6-30-09 CIVIL STATE OF CALIFORNIA

The State of California or its officers or agents shall not be responsible for the accuracy or completeness of electronic copies of this plan sheet.

To accompany plans dated 11-16-09

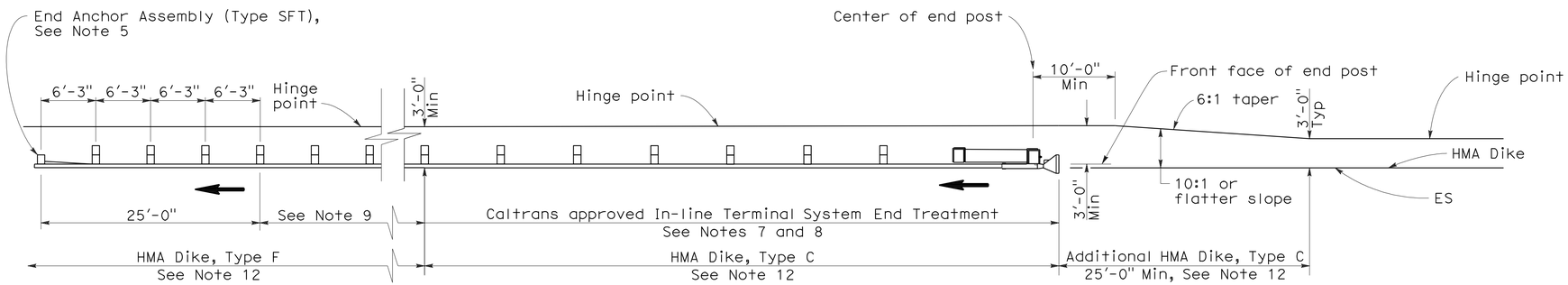

TYPE 11A LAYOUT

(EMBANKMENT GUARD INSTALLATION WITH IN-LINE END TREATMENT AT TRAFFIC APPROACH END OF RAILING)
See Note 6

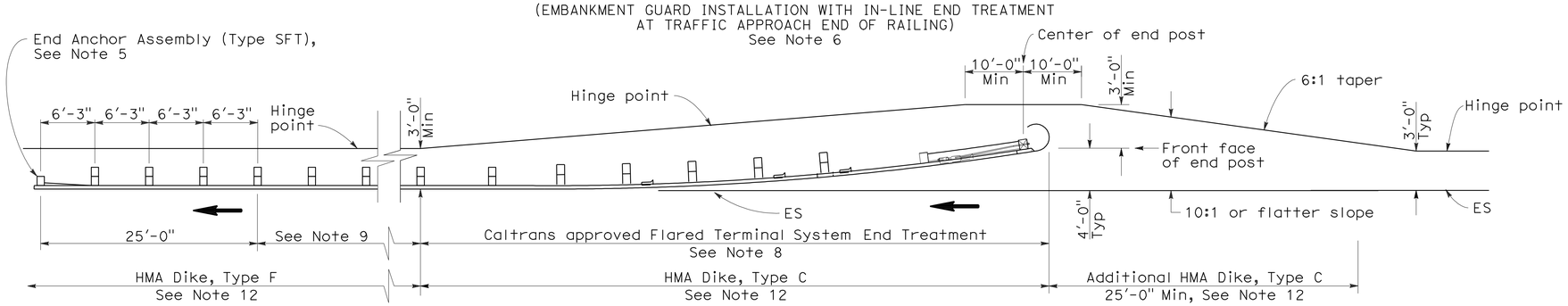

TYPE 11B LAYOUT

(EMBANKMENT GUARD RAILING INSTALLATION WITH FLARED END TREATMENT AT TRAFFIC APPROACH END OF RAILING)
See Note 6

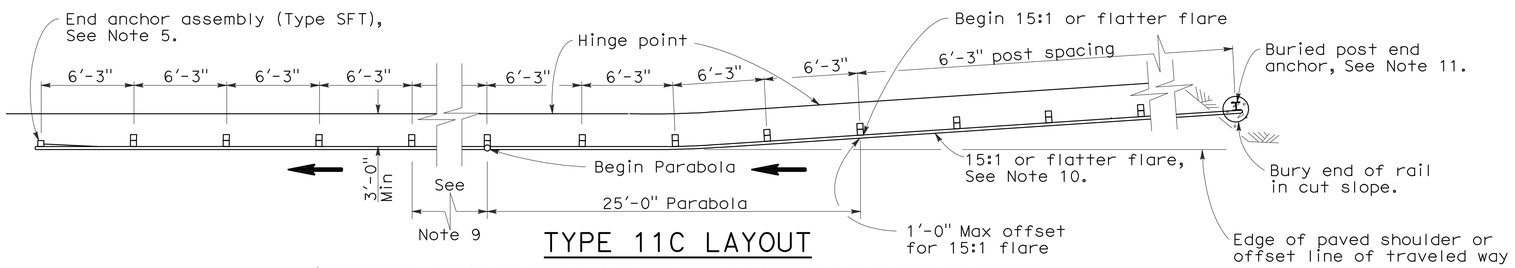

TYPE 11C LAYOUT

(EMBANKMENT GUARD RAILING INSTALLATION WITH BURIED END ANCHOR TREATMENT AT TRAFFIC APPROACH END OF RAILING)
See Notes 6 and 12

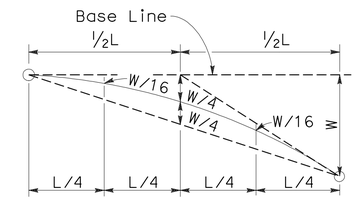

TYPICAL PARABOLIC LAYOUT

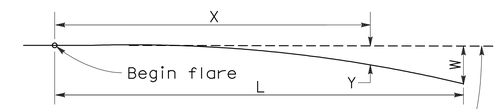

Base Line (Edge of paved shoulder or offset line of edge of traveled way)

$$Y = \frac{WX^2}{L^2}$$

Y = Offset from base line
W = Maximum offset
X = Distance along base line
L = Length of flare

PARABOLIC FLARE OFFSETS

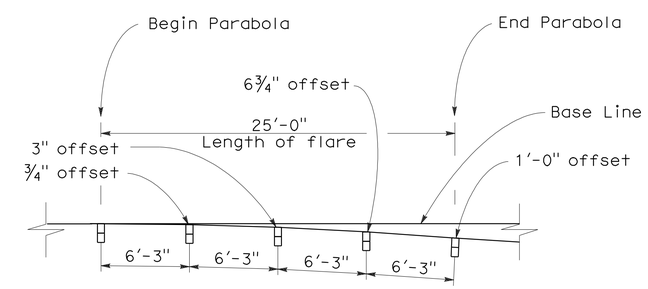

TYPICAL FLARE OFFSETS FOR 1 FOOT MAX END OFFSET

NOTES:

1. Line post, blocks and hardware to be used are shown on Standard Plans A77A1, A77A2, A77B1, A77C1, and A77C2.
2. Guard rail post spacing to be 6'-3" center to center, except as otherwise noted.
3. Except as noted, line posts are 6" x 8" x 6'-0" wood with 6" x 8" x 1'-2" wood blocks. W6 x 9 steel posts, 6'-0" in length, with 6" x 8" x 1'-2" notched wood blocks or recycled plastic blocks may be used for 6" x 8" x 6'-0" wood post with 6" x 8" x 1'-2" wood blocks where applicable and when specified.
4. Direction of adjacent traffic indicated by ➡.
5. For End Anchor Assembly (Type SFT) details, see Standard Plan A77H1.
6. Layout Types 11A, 11B or 11C are typically used where guard railing is recommended to shield embankment slopes and a crashworthy end treatment is required for only one direction of traffic.
7. In-line Terminal System End Treatments are used where site conditions will not accommodate a flared end treatment.
8. The type of terminal system end treatment to be used will be shown on the Project Plans.
9. Dependent on site conditions (embankment height and side slope), construction of additional guard railing (length equal to multiples of 12'-6" with 6'-3" post spacing) may be advisable.
10. The 15:1 or flatter flare used with buried end anchors is based on the edge of the paved shoulder or offset line of edge of the traveled way. The length of guard railing within the 15:1 or flatter flare is based on site conditions and should be a length equal to multiples of 12'-6".
11. For details of the buried post end anchor used with Type 11C Layout, see Standard Plan A77I2.
12. Where placement of dike is required with guard railing installations, see Revised Standard Plan RSP A77C4 for dike positioning details.

STATE OF CALIFORNIA
DEPARTMENT OF TRANSPORTATION

METAL BEAM GUARD RAILING TYPICAL LAYOUTS FOR EMBANKMENTS

NO SCALE

RSP A77E1 DATED JUNE 6, 2008 SUPERSEDES STANDARD PLAN A77E1 DATED MAY 1, 2006 - PAGE 48 OF THE STANDARD PLANS BOOK DATED MAY 2006.

REVISED STANDARD PLAN RSP A77E1

2006 REVISED STANDARD PLAN RSP A77E1

12-10-07

DIST	COUNTY	ROUTE	POST MILES TOTAL PROJECT	SHEET NO.	TOTAL SHEETS
03	But,Col,ED, Gle,Pla, *etc.*	5,50,65, 70,99, *etc.*	Var	9	12

Randell D. Hiatt
REGISTERED CIVIL ENGINEER

June 6, 2008
PLANS APPROVAL DATE

The State of California or its officers or agents shall not be responsible for the accuracy or completeness of electronic copies of this plan sheet.

REGISTERED PROFESSIONAL ENGINEER Randell D. Hiatt No. C50200 Exp. 6-30-09 CIVIL STATE OF CALIFORNIA

To accompany plans dated 11-16-09

NOTES:

1. Line post, blocks and hardware to be used are shown on Standard Plans A77A1, A77A2, A77B1, A77C1 and A77C2.
2. Guard railing post spacing to be 6′-3″ center to center, except as otherwise noted.
3. Except as noted, line posts are 6″ x 8″ x 6′-0″ wood with 6″ x 8″ x 1′-2″ wood blocks. W6 x 9 steel posts, 6′-0″ in length, with 6″ x 8″ x 1′-2″ notched wood blocks or notched recycled plastic blocks may be used for 6″ x 8″ x 6′-0″ wood line posts with 6″ x 8″ x 1′-2″ wood blocks where applicable and when specified.
4. A 4′-0″ minimum clearance is required between the face of the railing and the face of a fixed object located directly behind standard guard railing sections with post spacing of 6′-3″. Construct guard railing as shown in the detail "Strengthened Railing Sections for Fixed Objects" on this plan, where the clearance between the face of the railing and the face of a fixed object is less than 4′-0″, but not less than 2′-3″. Where the clearance is less than 2′-3″, a concrete wall or barrier should be constructed to shield the fixed object(s).
5. Direction of adjacent traffic indicated by ➡.
6. For End Anchor Assembly (Type SFT) details, see Standard Plan A77H1.
7. For details of Rail Tensioning Assembly, see Standard Plan A77H2.
8. The type of crash cushion to be used will be shown on the Project Plans.
9. Type 14A layout is typically used on multilane freeways or expressways to shield fixed objects where a median type barrier is not constructed between the separated roadbeds.
10. For typical flare offsets for 25′-0″ length parabola with maximum offset of 1′-0″, see Revised Standard Plan RSP A77E1.
11. The 15:1 or flatter flare is measured off of the edge of traveled way.
12. W6 x 15 steel post, 8′-0″ in length, with 8″ x 8″ x 1′-2″ notched wood block or notched recycled plastic block may be used in place of the 10″ x 10″ x 8′-0″ wood post with 8″ x 8″ x 1′-2″ wood block shown in the "Strengthened Railing Sections Detail".

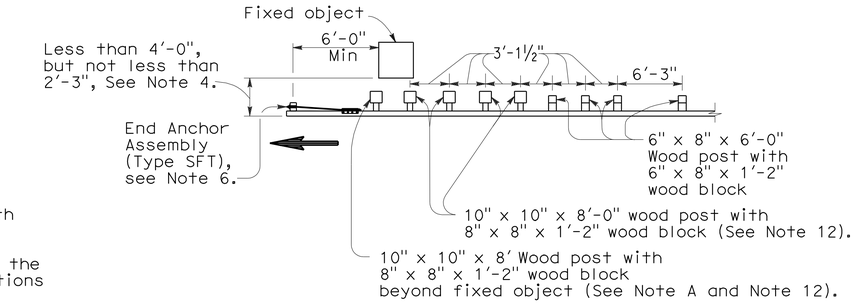

NOTE A: For a series of fixed objects (bridge columns, overhead sign supports, etc.) additional 10″ x 10″ x 8′-0″ wood post with 8″ x 8″ x 1′-2″ wood blocks at 3′-1½″ center to center spacing are to be used between fixed objects.

STRENGTHENED RAILING SECTIONS FOR FIXED OBJECT

Use strengthened railing sections with Type 14A layout where minimum clearance between the face of the guard railing and fixed object(s) is less than 4′-0″, but not less than 2′-3″, See Note 4.

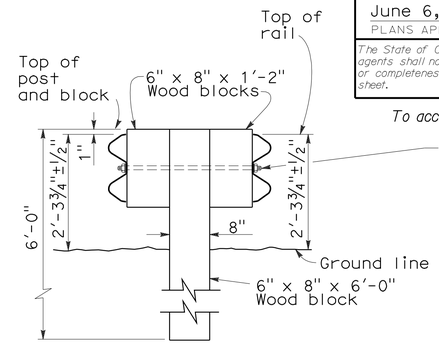

SECTION A-A
TYPICAL DOUBLE METAL BEAM GUARD RAILING

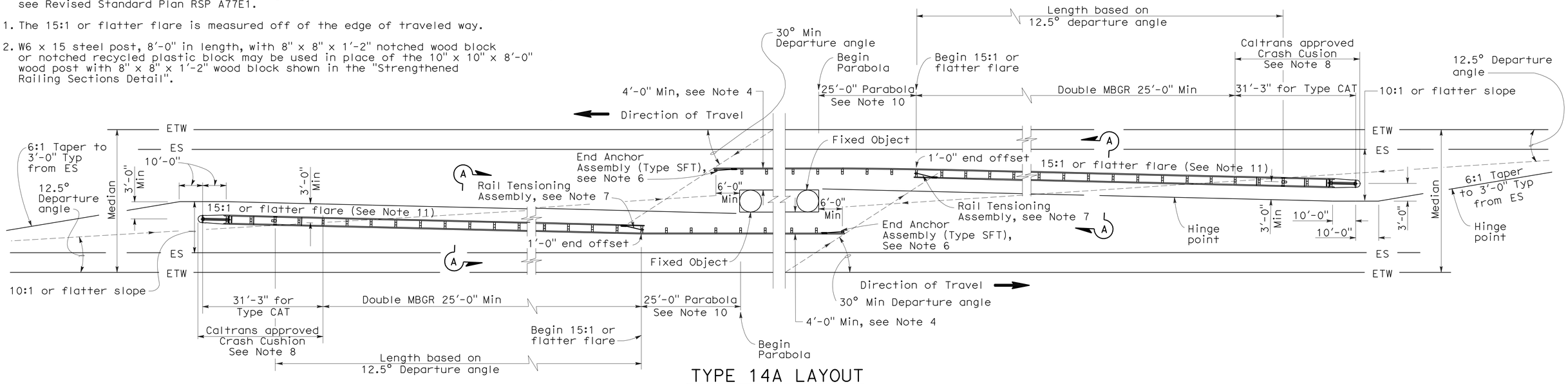

TYPE 14A LAYOUT

See Note 9

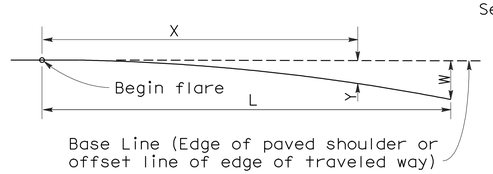

Base Line (Edge of paved shoulder or offset line of edge of traveled way)

$$Y = \frac{WX^2}{L^2}$$

Y = Offset from base line
W = Maximum offset
X = Distance along base line
L = Length of flare

PARABOLIC FLARE OFFSETS

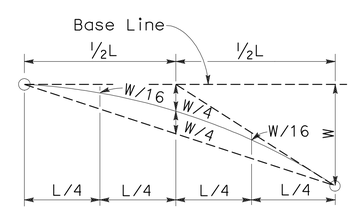

TYPICAL PARABOLIC LAYOUT

STATE OF CALIFORNIA
DEPARTMENT OF TRANSPORTATION

METAL BEAM GUARD RAILING TYPICAL LAYOUTS FOR FIXED OBJECTS BETWEEN SEPARATE ROADBEDS (TWO-WAY TRAFFIC)

NO SCALE

RSP A77G1 DATED JUNE 6, 2008 SUPERSEDES STANDARD PLAN A77G1 DATED MAY 1, 2006 - PAGE 59 OF THE STANDARD PLANS BOOK DATED MAY 2006.

REVISED STANDARD PLAN RSP A77G1

2006 REVISED STANDARD PLAN RSP A77G1

12-10-07

DIST	COUNTY	ROUTE	POST MILES TOTAL PROJECT	SHEET NO.	TOTAL SHEETS
03	But,Col,ED, Gle,Pla, *etc.*	5,50,65, 70,99, *etc.*	Var	10	12

Randell D. Hiatt
REGISTERED CIVIL ENGINEER

June 6, 2008
PLANS APPROVAL DATE

REGISTERED PROFESSIONAL ENGINEER
Randell D. Hiatt
No. C50200
Exp. 6-30-09
CIVIL
STATE OF CALIFORNIA

The State of California or its officers or agents shall not be responsible for the accuracy or completeness of electronic copies of this plan sheet.

To accompany plans dated 11-16-09

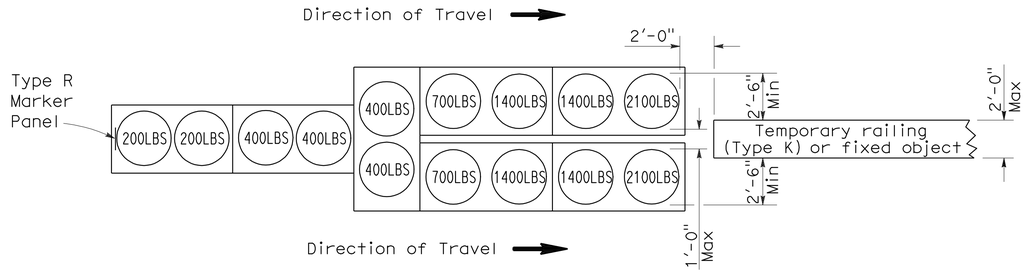

ARRAY 'TU14'

Approach speed 45 mph or more

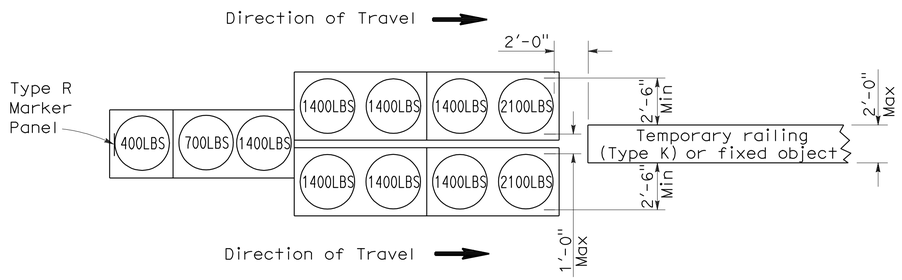

ARRAY 'TU11'

Approach speed less than 45 mph

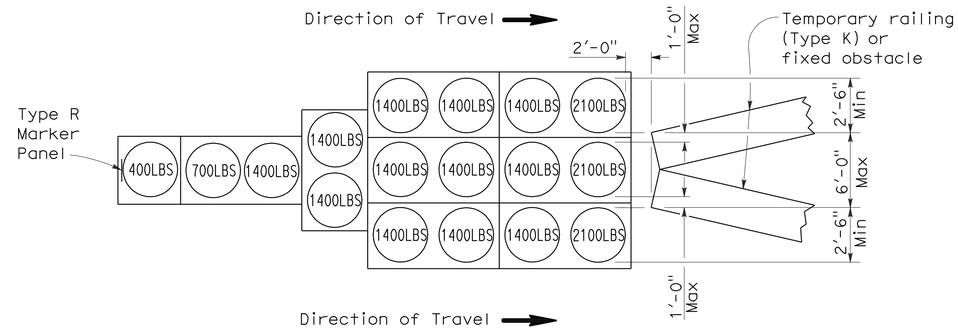

ARRAY 'TU17'

Approach speed less than 45 mph

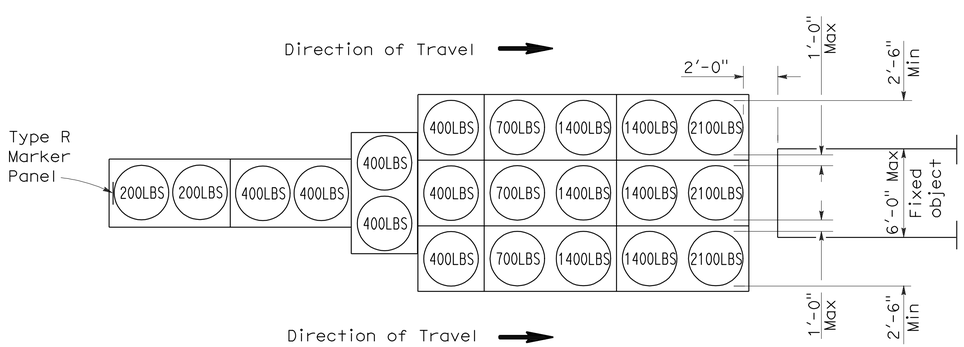

ARRAY 'TU21'

Approach speed 45 mph or more

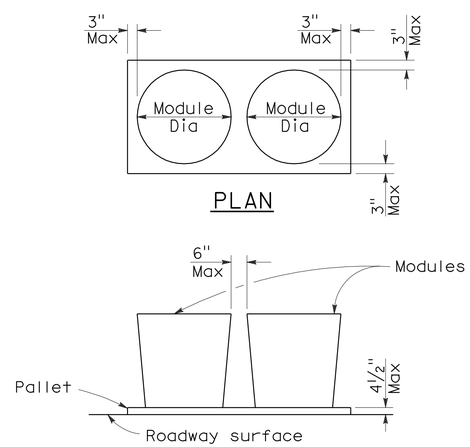

ELEVATION

CRASH CUSHION PALLET DETAIL

See Note 7

NOTES:

1. (XXX) Indicates sand filled module location and weight of sand in pounds for each module. Module spacing is based on the greater diameter of the module.
2. All sand weights are nominal.
3. Temporary crash cushion arrays shall not encroach on the traveled way.
4. Place the top of Type R marker panel 1" below the module lid.
5. Refer to Standard Plan A73B for marker details.
6. Approach speeds indicated conform to NCHRP 350 Report criteria.
7. Use of pallets is optional.

STATE OF CALIFORNIA
DEPARTMENT OF TRANSPORTATION

TEMPORARY CRASH CUSHION, SAND FILLED (UNIDIRECTIONAL)

NO SCALE

RSP T1A DATED JUNE 6, 2008 SUPERSEDES STANDARD PLAN T1A
DATED MAY 1, 2006 - PAGE 211 OF THE STANDARD PLANS BOOK DATED MAY 2006.

REVISED STANDARD PLAN RSP T1A

2006 REVISED STANDARD PLAN RSP T1A

DIST	COUNTY	ROUTE	POST MILES TOTAL PROJECT	SHEET NO.	TOTAL SHEETS
03	But,Col,ED, Gle,Pla, *etc.*	5,50,65, 70,99, *etc.*	Var	11	12

Randell D. Hiatt
REGISTERED CIVIL ENGINEER

June 6, 2008
PLANS APPROVAL DATE

REGISTERED PROFESSIONAL ENGINEER
Randell D. Hiatt
No. C50200
Exp. 6-30-09
CIVIL
STATE OF CALIFORNIA

The State of California or its officers or agents shall not be responsible for the accuracy or completeness of electronic copies of this plan sheet.

To accompany plans dated 11-16-09

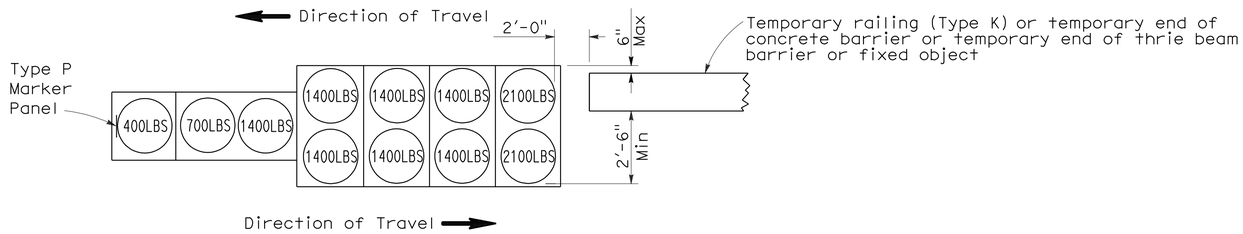

ARRAY 'TB11'

Approach speed less than 45 mph

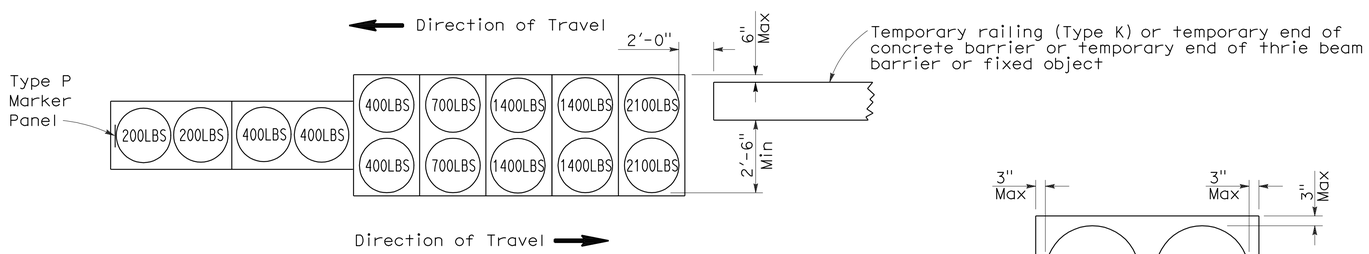

ARRAY 'TB14'

Approach speed 45 mph or more

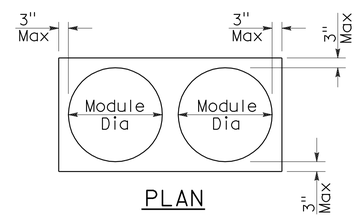

PLAN

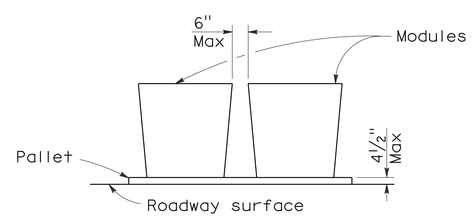

ELEVATION

CRASH CUSHION PALLET DETAIL

See Note 7

NOTES:

1. (XXX) Indicates sand filled module location and weight of sand in pounds for each module. Module spacing is based on the greater diameter of the module.
2. All sand weights are nominal.
3. Temporary crash cushion arrays shall not encroach on the traveled way.
4. Place the Type P marker panel so that the bottom of the panel rests upon the pallet.
5. Refer to Standard Plan A73B for marker details.
6. Approach speeds indicated conform to NCHRP 350 Report criteria.
7. Use of pallets is optional.

STATE OF CALIFORNIA
DEPARTMENT OF TRANSPORTATION

TEMPORARY CRASH CUSHION, SAND FILLED (BIDIRECTIONAL)

NO SCALE

RSP T1B DATED JUNE 6, 2008 SUPERSEDES STANDARD PLAN T1B
DATED MAY 1, 2006 - PAGE 212 OF THE STANDARD PLANS BOOK DATED MAY 2006.

REVISED STANDARD PLAN RSP T1B

2006 REVISED STANDARD PLAN RSP T1B

5-15-08

DIST	COUNTY	ROUTE	POST MILES TOTAL PROJECT	SHEET NO.	TOTAL SHEETS
03	But,Col,ED, Gle,Pla, *etc.*	5,50,65, 70,99, *etc.*	Var	12	12

Randell D. Hiatt
REGISTERED CIVIL ENGINEER

June 6, 2008
PLANS APPROVAL DATE

REGISTERED PROFESSIONAL ENGINEER
Randell D. Hiatt
No. C50200
Exp. 6-30-09
CIVIL
STATE OF CALIFORNIA

The State of California or its officers or agents shall not be responsible for the accuracy or completeness of electronic copies of this plan sheet.

To accompany plans dated 11-16-09

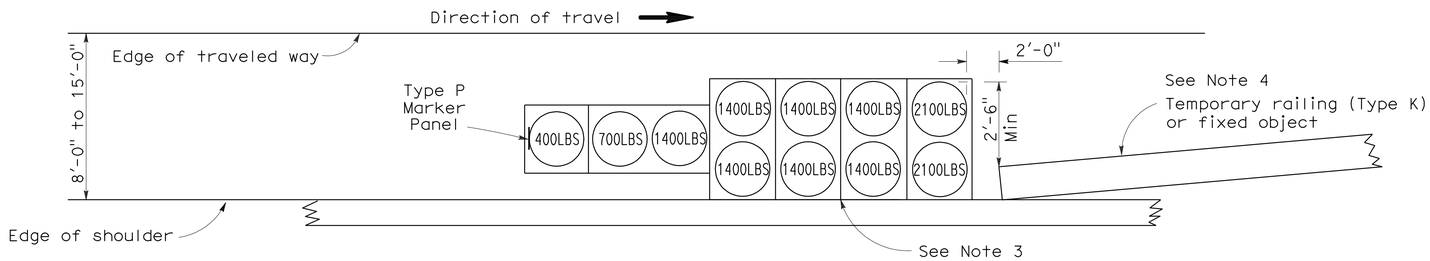

ARRAY 'TS11'

Approach speed less than 45 mph
See Note 9

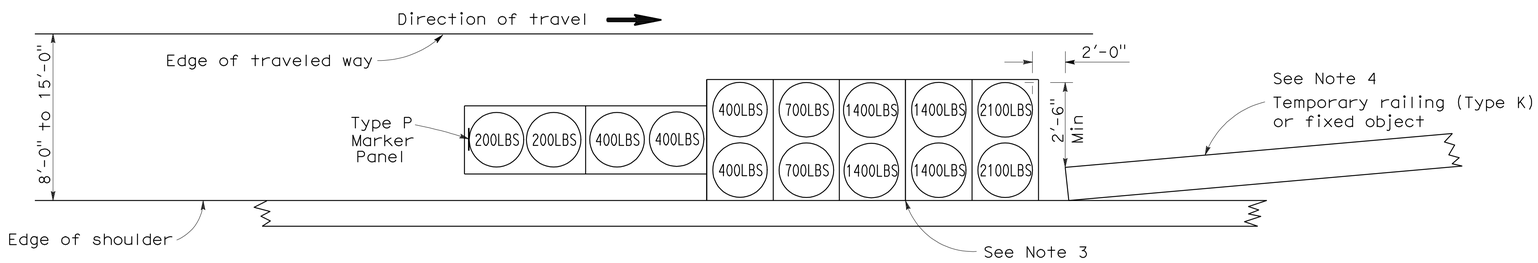

ARRAY 'TS14'

Approach speed 45 mph or more
See Note 9

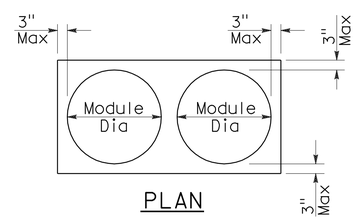

PLAN

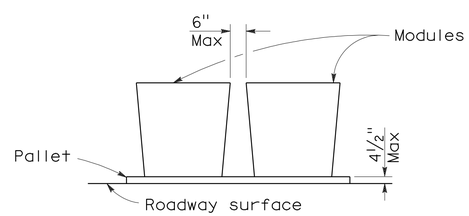

ELEVATION

CRASH CUSHION PALLET DETAIL

See Note 11

NOTES:

1. (XXX) Indicates sand filled module location and weight of sand in pounds for each module. Module spacing is based on the greater diameter of the module.
2. All sand weights are nominal.
3. The temporary crash cushion arrays shown on this plan shall be used only in locations where there will be traffic on one side of the temporary crash cushion array.
4. If the fixed object or approach end of the temporary railing is less than 15'-0" from the edge of traveled way, a temporary crash cushion is required in a construction or work zone.
5. Temporary crash cushion arrays shall not encroach on the traveled way.
6. Arrays for median shoulders shall conform to details shown on this plan for outside shoulders.
7. Place the Type P marker panel so that the bottom of the panel rests upon the pallet and faces traffic.
8. Refer to Standard Plan A73B for marker details.
9. For shoulder widths less than 8'-0", appropriate approved crash cushion protection, other than sand filled modules, shall be provided at fixed objects and at approach ends of temporary railing. The specific type of crash cushion shall be as shown on the project plans or as specified in the Special Provisions, or if not shown on the project plans or specified in the Special Provisions, shall be as approved by the Engineer.
10. Approach speeds indicated conform to NCHRP 350 Report criteria.
11. Use of pallets is optional.

STATE OF CALIFORNIA
DEPARTMENT OF TRANSPORTATION

TEMPORARY CRASH CUSHION, SAND FILLED (SHOULDER INSTALLATIONS)

NO SCALE

RSP T2 DATED JUNE 6, 2008 SUPERSEDES STANDARD PLAN T2
DATED MAY 1, 2006 - PAGE 213 OF THE STANDARD PLANS BOOK DATED MAY 2006.

REVISED STANDARD PLAN RSP T2

2006 REVISED STANDARD PLAN RSP T2

5-15-08