ACHSSTP-P049(153)E

Dist	COUNTY	ROUTE	POST MILES TOTAL PROJECT	SHEET No.	TOTAL SHEETS
03	ED	49	3.8	1	30

STATE OF CALIFORNIA
DEPARTMENT OF TRANSPORTATION

PROJECT PLANS FOR CONSTRUCTION ON
STATE HIGHWAY

IN EL DORADO COUNTY
NEAR NASHVILLE
AT 0.7 MILE NORTH OF UNION MINE ROAD

INDEX OF PLANS

SHEET No.	DESCRIPTION
1	TITLE AND LOCATION MAP
2-3	TYPICAL CROSS SECTIONS
4-5	LAYOUTS
6	PROFILES
7	SUPERELEVATION DIAGRAM
8	CONSTRUCTION DETAILS
9-14	EROSION CONTROL
15-19	DRAINAGE PLANS AND QUANTITIES
20	CONSTRUCTION AREA SIGNS
21-22	PAVEMENT DELINEATION PLANS AND QUANTITIES
23	SIGN DETAILS
24	SUMMARY OF QUANTITIES
25	TRAFFIC CONTROL SYSTEMS
26-30	REVISED STANDARD PLANS

THE STANDARD PLANS LIST APPLICABLE TO THIS CONTRACT IS INCLUDED IN THE NOTICE TO BIDDERS AND SPECIAL PROVISIONS BOOK.

TO BE SUPPLEMENTED BY STANDARD PLANS DATED 2010

LOCATION MAP

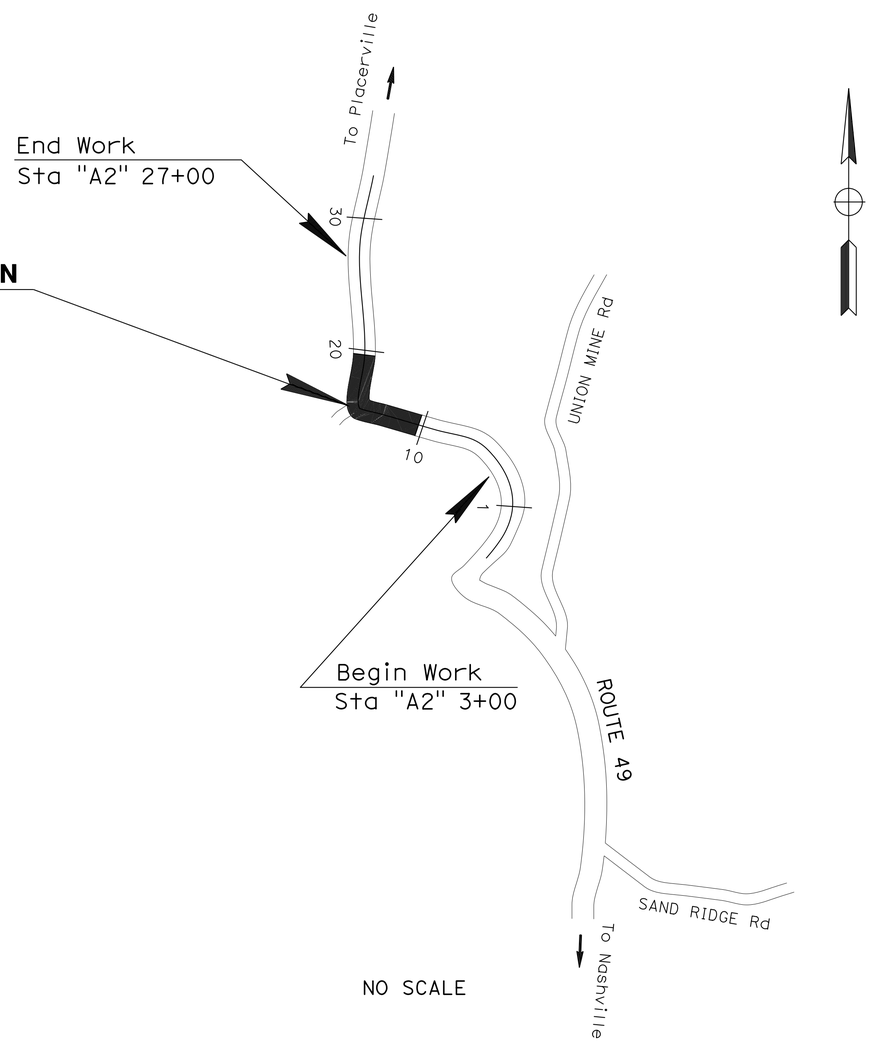

LOCATION OF CONSTRUCTION
Sta "A2" 15+00 PM 3.8

NO SCALE

THE CONTRACTOR SHALL POSSESS THE CLASS (OR CLASSES) OF LICENSE AS SPECIFIED IN THE "NOTICE TO BIDDERS."

Kris M. Albers 12-10-12
PROJECT ENGINEER DATE
REGISTERED CIVIL ENGINEER

December 10, 2012
PLANS APPROVAL DATE

REGISTERED PROFESSIONAL ENGINEER
KRIS M. ALBERS
No. 49986
Exp. 06-30-13
CIVIL
STATE OF CALIFORNIA

THE STATE OF CALIFORNIA OR ITS OFFICERS OR AGENTS SHALL NOT BE RESPONSIBLE FOR THE ACCURACY OR COMPLETENESS OF SCANNED COPIES OF THIS PLAN SHEET.

CONTRACT No.	03-4E5904
PROJECT ID	0300000711

PROJECT MANAGER: CLARK PERI
DESIGN ENGINEER: STEPHEN WRIGHT

LAST REVISION 12-14-12
DATE PLOTTED => 22-MAR-2013
TIME PLOTTED => 12:41

Dist	COUNTY	ROUTE	POST MILES TOTAL PROJECT	SHEET No.	TOTAL SHEETS
03	ED	49	3.8	2	30

Kris M. Albers 12-10-12
REGISTERED CIVIL ENGINEER DATE

12-10-12
PLANS APPROVAL DATE

REGISTERED PROFESSIONAL ENGINEER
KRIS M. ALBERS
No. 49986
Exp. 06-30-13
CIVIL
STATE OF CALIFORNIA

THE STATE OF CALIFORNIA OR ITS OFFICERS OR AGENTS SHALL NOT BE RESPONSIBLE FOR THE ACCURACY OR COMPLETENESS OF SCANNED COPIES OF THIS PLAN SHEET.

NOTES:

1. DIMENSIONS OF THE PAVEMENT STRUCTURES (STRUCTURAL SECTIONS) ARE SUBJECT TO TOLERANCES SPECIFIED IN THE STANDARD SPECIFICATIONS.
2. SUPERELEVATION IS AS SHOWN ON SUPERELEVATION DIAGRAM.
3. ALL DIMENSIONS ARE APPROXIMATE.
4. SAWCUT 1' INSIDE Exist EP.

ABBREVIATIONS

HMA-O - HOT MIX ASPHALT (OPEN GRADED)
HMA-A - HOT MIX ASPHALT (TYPE A)
SC - SAWCUT
BRK - BREAK

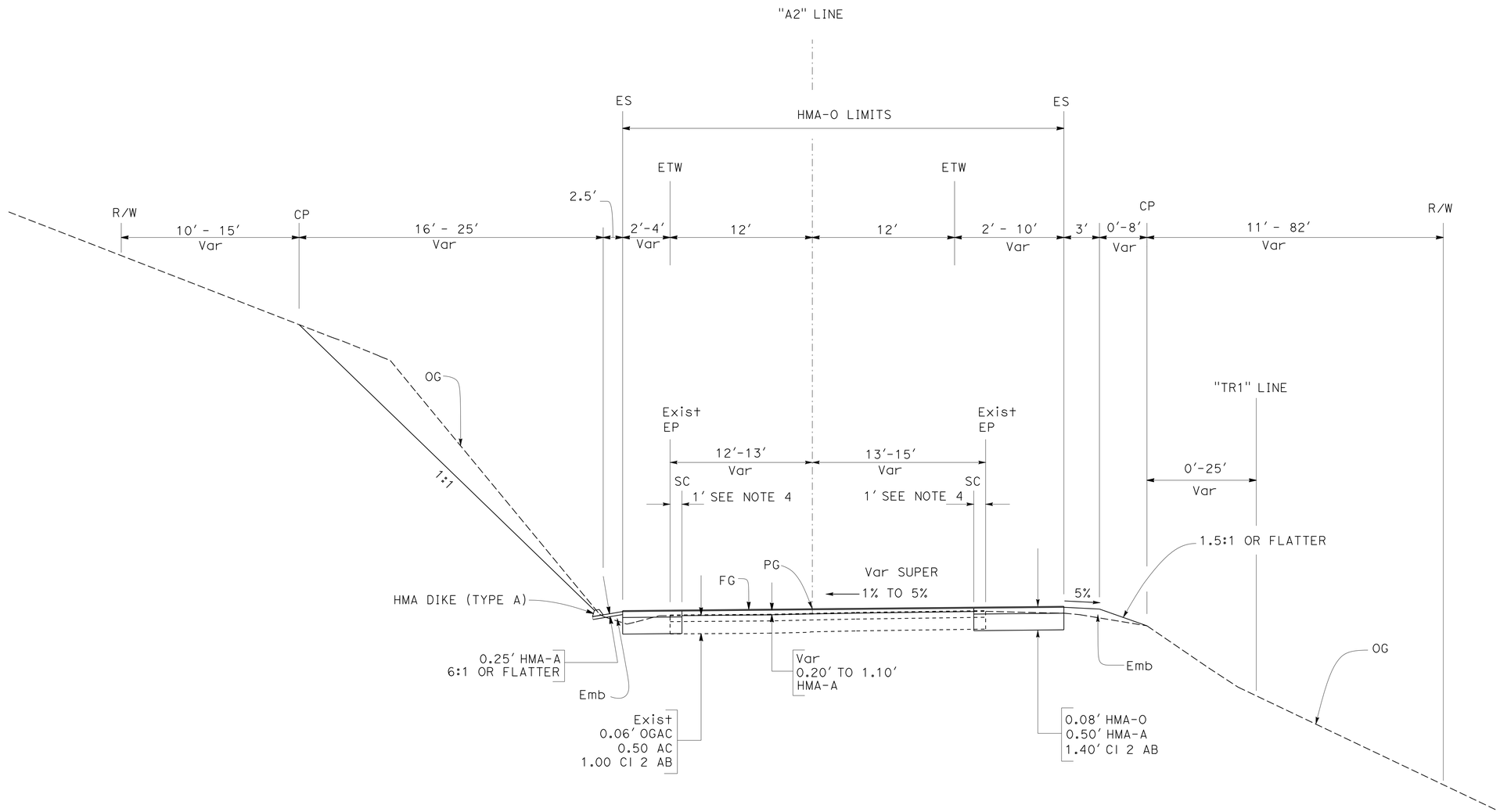

Sta "A2" 11+00 TO Sta "A2" 14+00

ROUTE 49

TYPICAL CROSS SECTIONS

NO SCALE

X-1

STATE OF CALIFORNIA - DEPARTMENT OF TRANSPORTATION
Caltrans®
TRAFFIC

FUNCTIONAL SUPERVISOR: STEPHEN T. WRIGHT
CALCULATED-DESIGNED BY: A.G. CHIN
CHECKED BY: KRIS ALBERS
REVISED BY
DATE REVISED

LAST REVISION 12-03-12
DATE PLOTTED => 20-DEC-2012
TIME PLOTTED => 14:30

Dist	COUNTY	ROUTE	POST MILES TOTAL PROJECT	SHEET No.	TOTAL SHEETS
03	ED	49	3.8	3	30

Kris M. Albers 12-10-12
REGISTERED CIVIL ENGINEER DATE

12-10-12
PLANS APPROVAL DATE

REGISTERED PROFESSIONAL ENGINEER
KRIS M. ALBERS
No. 49986
Exp. 06-30-13
CIVIL
STATE OF CALIFORNIA

THE STATE OF CALIFORNIA OR ITS OFFICERS OR AGENTS SHALL NOT BE RESPONSIBLE FOR THE ACCURACY OR COMPLETENESS OF SCANNED COPIES OF THIS PLAN SHEET.

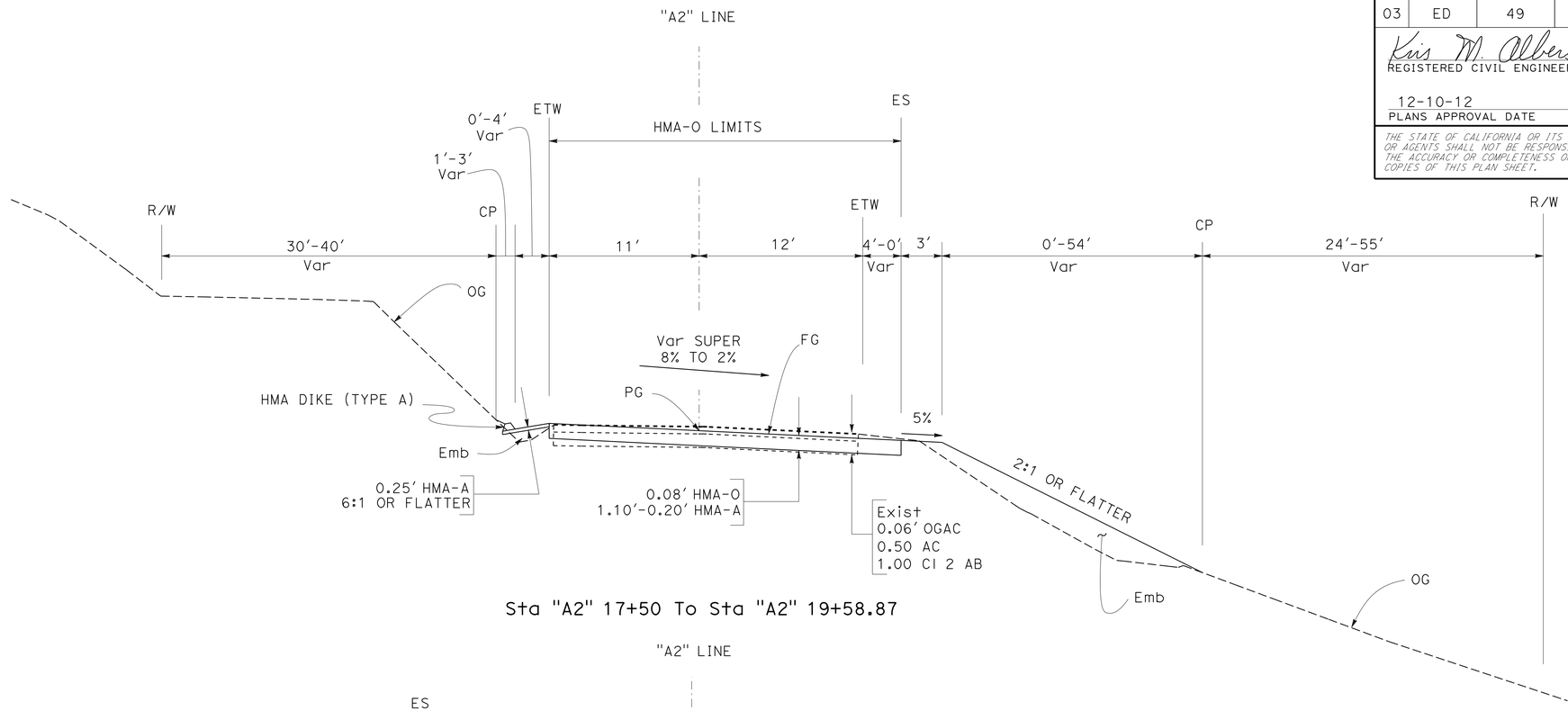

Sta "A2" 17+50 To Sta "A2" 19+58.87

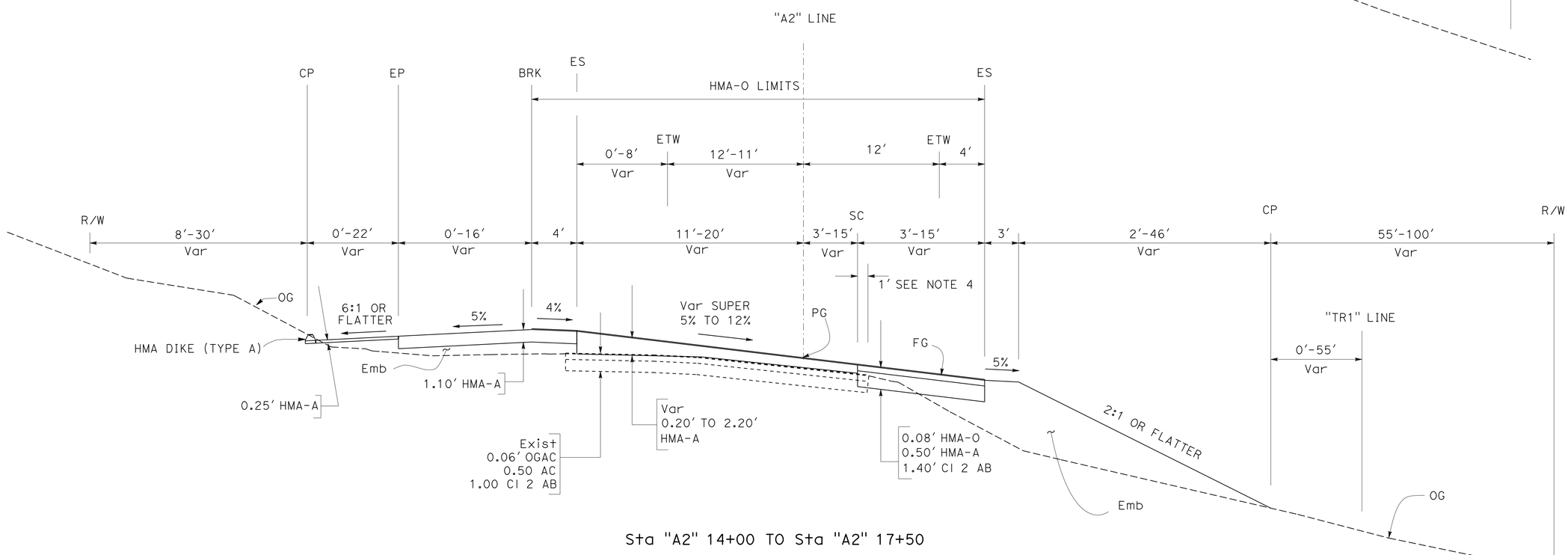

Sta "A2" 14+00 TO Sta "A2" 17+50

ROUTE 49

TYPICAL CROSS SECTIONS

NO SCALE

X-2

STATE OF CALIFORNIA - DEPARTMENT OF TRANSPORTATION
Caltrans
TRAFFIC

FUNCTIONAL SUPERVISOR: STEPHEN T. WRIGHT
CALCULATED-DESIGNED BY: A.G. CHIN
CHECKED BY: KRIS ALBERS
REVISED BY
DATE REVISED

LAST REVISION 12-03-12
DATE PLOTTED => 22-MAR-2013
TIME PLOTTED => 12:44

Dist	COUNTY	ROUTE	POST MILES TOTAL PROJECT	SHEET No.	TOTAL SHEETS
03	ED	49	3.8	4	30

Kris M. Albers 12-10-12
REGISTERED CIVIL ENGINEER DATE

12-10-12
PLANS APPROVAL DATE

REGISTERED PROFESSIONAL ENGINEER
KRIS M. ALBERS
No. 49986
Exp. 06-30-13
CIVIL
STATE OF CALIFORNIA

THE STATE OF CALIFORNIA OR ITS OFFICERS OR AGENTS SHALL NOT BE RESPONSIBLE FOR THE ACCURACY OR COMPLETENESS OF SCANNED COPIES OF THIS PLAN SHEET.

NOTES:

1. FOR ACCURATE RIGHT OF WAY DATA, CONTACT RIGHT OF WAY ENGINEERING AT THE DISTRICT OFFICE.
2. ROADSIDE CLEARING WILL CONSIST OF PLANT REMOVAL ONLY.

LEGEND

COLD PLANE AC Pvmt (0.20 MAXIMUM) (SEE SHEET C-1)

ROADSIDE CLEARING (SEE "TR1" LINE)

ABBREVIATIONS

HMA-O - HOT MIX ASPHALT (OPEN GRADED)
HMA-A - HOT MIX ASPHALT (TYPE A)

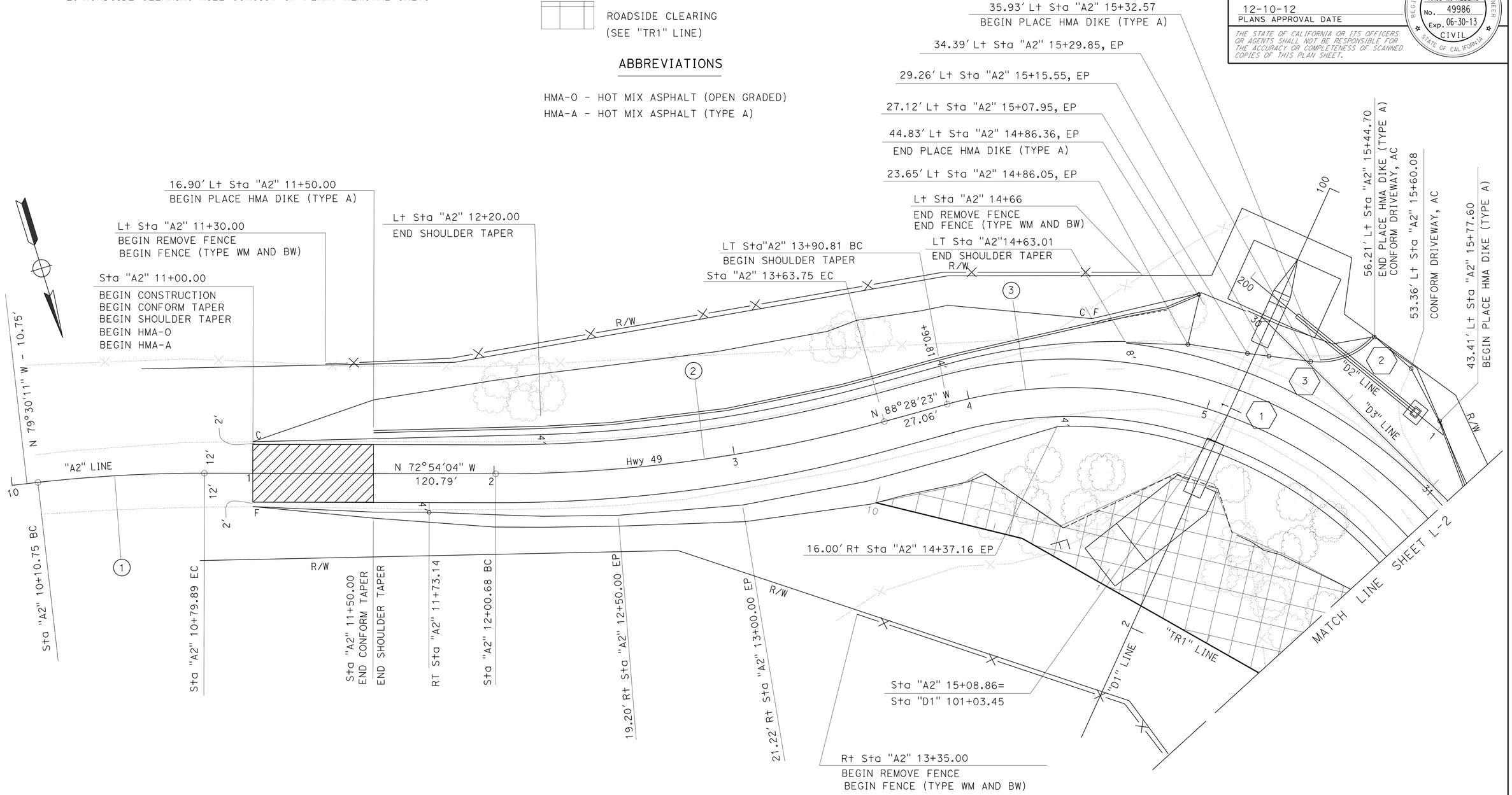

CURVE DATA

NO.	R	Δ	T	L
1	600'	6°36'07"	34.61'	69.13'
2	600'	15°34'19"	82.04'	163.07'
3	190'	97°17'39"	215.87'	322.64'
4	900'	9°45'23"	76.81'	153.25'

LAYOUT

Scale: 1" = 20'

L-1

STATE OF CALIFORNIA - DEPARTMENT OF TRANSPORTATION
Caltrans
TRAFFIC

FUNCTIONAL SUPERVISOR: STEPHEN T. WRIGHT
CALCULATED-DESIGNED BY: A.G. CHIN
CHECKED BY: KRIS ALBERS
REVISED BY
DATE REVISED

LAST REVISION 12-03-12
DATE PLOTTED => 20-DEC-2012
TIME PLOTTED => 14:30

Dist	COUNTY	ROUTE	POST MILES TOTAL PROJECT	SHEET No.	TOTAL SHEETS
03	ED	49	3.8	5	30

Kris M. Albers 12-10-12
REGISTERED CIVIL ENGINEER DATE

12-10-12
PLANS APPROVAL DATE

REGISTERED PROFESSIONAL ENGINEER
KRIS M. ALBERS
No. 49986
Exp. 06-30-13
CIVIL
STATE OF CALIFORNIA

THE STATE OF CALIFORNIA OR ITS OFFICERS OR AGENTS SHALL NOT BE RESPONSIBLE FOR THE ACCURACY OR COMPLETENESS OF SCANNED COPIES OF THIS PLAN SHEET.

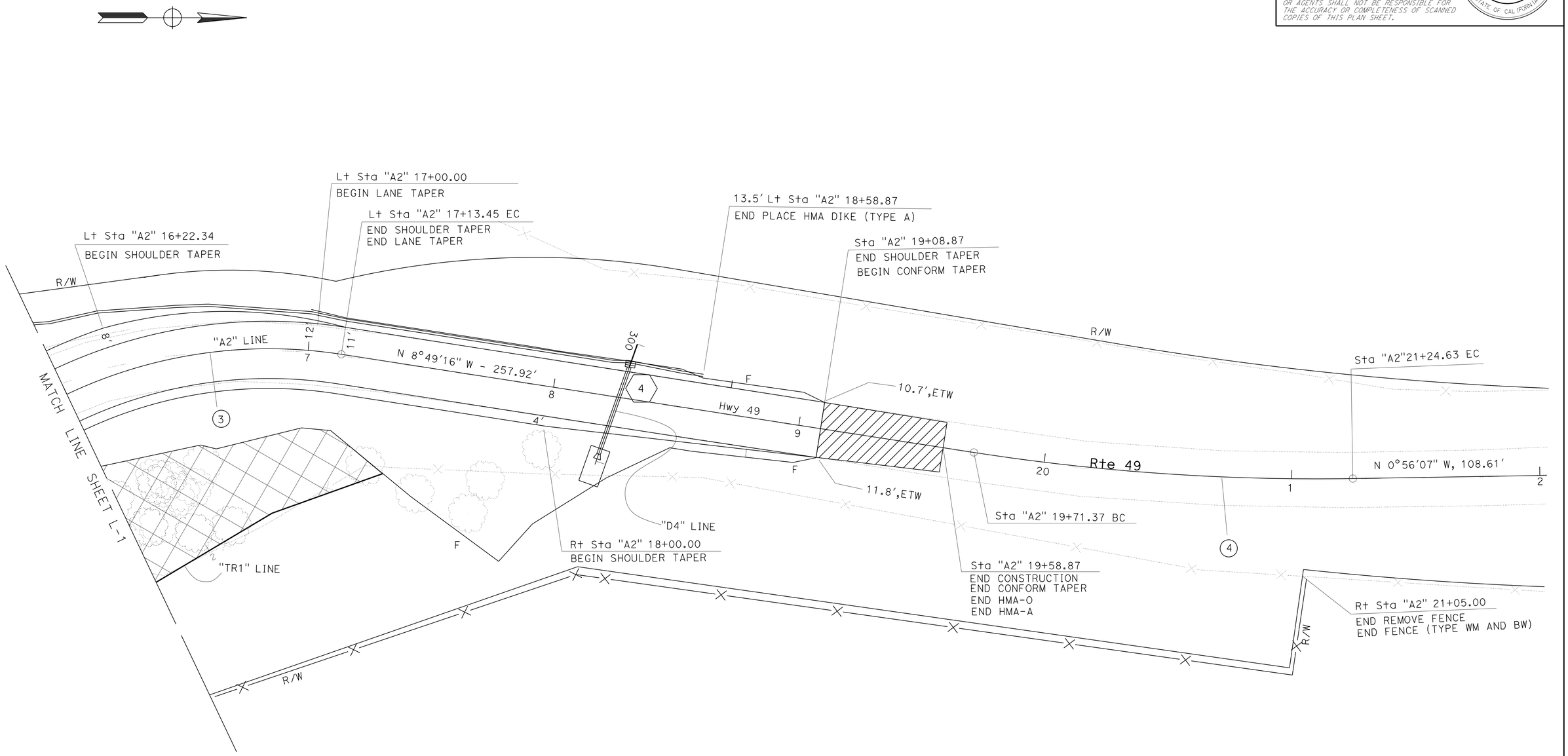

LAYOUT
Scale: 1" = 20'

L-2

STATE OF CALIFORNIA - DEPARTMENT OF TRANSPORTATION
Caltrans
TRAFFIC

FUNCTIONAL SUPERVISOR: STEPHEN T. WRIGHT
CALCULATED-DESIGNED BY: A.G. CHIN
CHECKED BY: KRIS ALBERS
REVISED BY
DATE REVISED

LAST REVISION 12-03-12
DATE PLOTTED => 20-DEC-2012
TIME PLOTTED => 14:30

Dist	COUNTY	ROUTE	POST MILES TOTAL PROJECT	SHEET No.	TOTAL SHEETS
03	ED	49	3.8	6	30

Kris M. Albers 12-10-12
REGISTERED CIVIL ENGINEER DATE

12-10-12
PLANS APPROVAL DATE

REGISTERED PROFESSIONAL ENGINEER
KRIS M. ALBERS
No. 49986
Exp 6-30-13
CIVIL
STATE OF CALIFORNIA

THE STATE OF CALIFORNIA OR ITS OFFICERS OR AGENTS SHALL NOT BE RESPONSIBLE FOR THE ACCURACY OR COMPLETENESS OF SCANNED COPIES OF THIS PLAN SHEET.

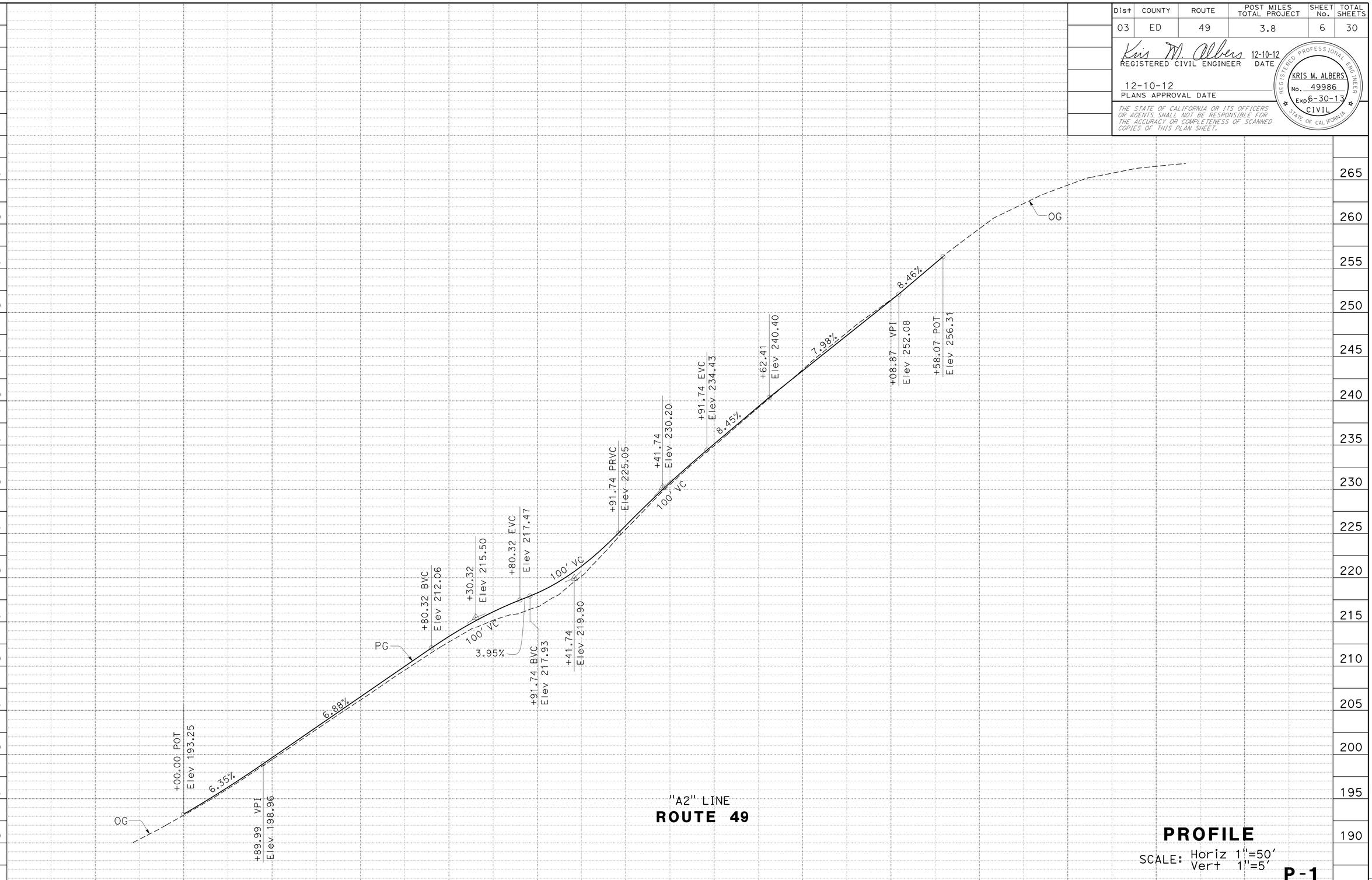

PROFILE

SCALE: Horiz 1"=50'
Vert 1"=5'

P-1

STATE OF CALIFORNIA - DEPARTMENT OF TRANSPORTATION
Caltrans
TRAFFIC

FUNCTIONAL SUPERVISOR: STEPHEN T. WRIGHT

CALCULATED-DESIGNED BY: A. G. CHIN
CHECKED BY: KRIS ALBERS

REVISED BY
DATE REVISED

LAST REVISION 10-14-12
DATE PLOTTED => 20-DEC-2012
TIME PLOTTED => 14:30

Dist	COUNTY	ROUTE	POST MILES TOTAL PROJECT	SHEET No.	TOTAL SHEETS
03	ED	49	3.8	7	30

Kris M. Albers 12-10-12
REGISTERED CIVIL ENGINEER DATE

12-10-12
PLANS APPROVAL DATE

REGISTERED PROFESSIONAL ENGINEER
KRIS M. ALBERS
No. 49986
Exp. 6-30-13
CIVIL
STATE OF CALIFORNIA

THE STATE OF CALIFORNIA OR ITS OFFICERS OR AGENTS SHALL NOT BE RESPONSIBLE FOR THE ACCURACY OR COMPLETENESS OF SCANNED COPIES OF THIS PLAN SHEET.

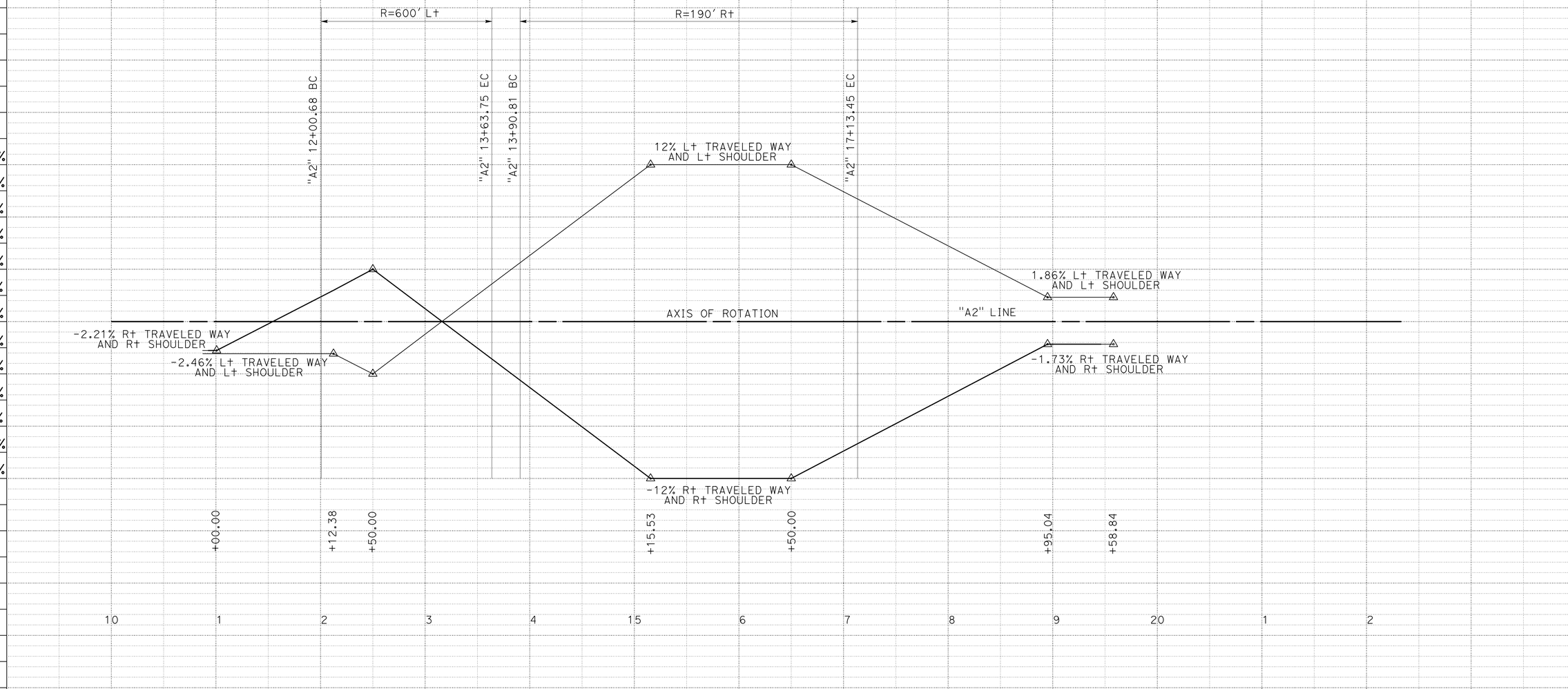

"A2" LINE
ROUTE 49

SUPERELEVATION DIAGRAM

SCALE: Horiz 1"=50'

SE-1

STATION		TOTAL
CY	Exc	
	Emb	

REVISED BY | DATE REVISED

A. G. CHIN | KRIS ALBERS

CALCULATED-DESIGNED BY | CHECKED BY

FUNCTIONAL SUPERVISOR: STEPHEN T. WRIGHT

STATE OF CALIFORNIA - DEPARTMENT OF TRANSPORTATION
Caltrans
TRAFFIC

LAST REVISION 12-03-12
DATE PLOTTED => 20-DEC-2012
TIME PLOTTED => 14:30

Dist	COUNTY	ROUTE	POST MILES TOTAL PROJECT	SHEET No.	TOTAL SHEETS
03	ED	49	3.8	8	30

Kris M. Albers 12-10-12
REGISTERED CIVIL ENGINEER DATE

12-10-12
PLANS APPROVAL DATE

REGISTERED PROFESSIONAL ENGINEER
KRIS M. ALBERS
No. 49986
Exp. 6-30-13
CIVIL
STATE OF CALIFORNIA

THE STATE OF CALIFORNIA OR ITS OFFICERS OR AGENTS SHALL NOT BE RESPONSIBLE FOR THE ACCURACY OR COMPLETENESS OF SCANNED COPIES OF THIS PLAN SHEET.

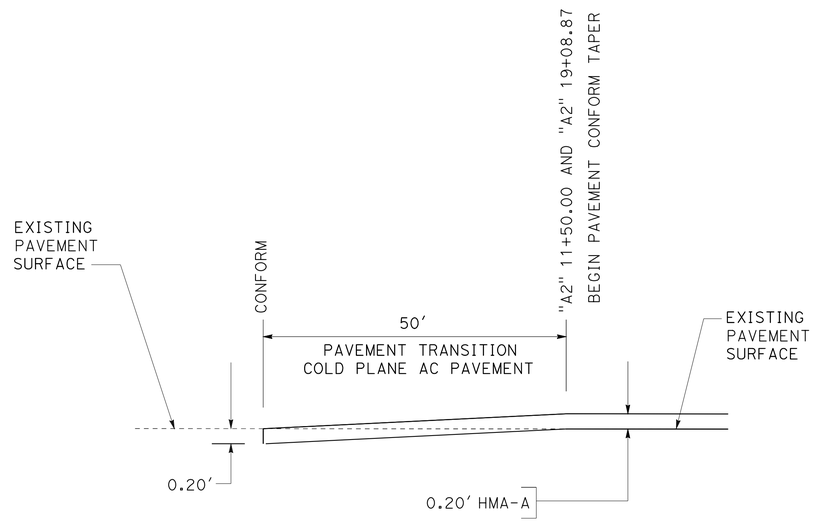

PAVEMENT CONFORM TAPER DETAIL

CONSTRUCTION DETAILS

NO SCALE

C-1

STATE OF CALIFORNIA - DEPARTMENT OF TRANSPORTATION
Caltrans
TRAFFIC

FUNCTIONAL SUPERVISOR: STEPHEN T. WRIGHT
CALCULATED-DESIGNED BY: KRIS ALBERS
CHECKED BY: A.G. CHIN
REVISED BY
DATE REVISED

LAST REVISION 10-14-12 | DATE PLOTTED => 20-DEC-2012 | TIME PLOTTED => 14:31

Dist	COUNTY	ROUTE	POST MILES TOTAL PROJECT	SHEET No.	TOTAL SHEETS
03	ED	49	3.8	9	30

LICENSED LANDSCAPE ARCHITECT

12-10-12
PLANS APPROVAL DATE

LICENSED LANDSCAPE ARCHITECT JAMES G. WILLIAMSON No. 5415 Signature 02-28-14 Renewal Date 12-07-12 Date STATE OF CALIFORNIA

THE STATE OF CALIFORNIA OR ITS OFFICERS OR AGENTS SHALL NOT BE RESPONSIBLE FOR THE ACCURACY OR COMPLETENESS OF SCANNED COPIES OF THIS PLAN SHEET.

EROSION CONTROL (TYPE 1)

SEQUENCE	ITEM DESCRIPTION	MATERIAL		APPLICATION RATE
		DESCRIPTION	TYPE	
STEP 1	COMPOST (TYPE 1)	COMPOST	MEDIUM	2" DEPTH
		SEED	--	45 LB/ACRE

EROSION CONTROL (TYPE 2)

SEQUENCE	ITEM DESCRIPTION	MATERIAL		APPLICATION RATE	DEPTH
		DESCRIPTION	TYPE		
STEP 1	COMPOST (TYPE 2)	COMPOST	MEDIUM	4" DEPTH	--
		SEED	--	0 LB/ACRE	--
STEP 2	INCORPORATE MATERIALS	COMPOST (TYPE 2)	--	--	12"-18"
STEP 3	COMPOST (TYPE 1)	COMPOST	MEDIUM	2" DEPTH	--
		SEED	--	45 LB/ACRE	--

EROSION CONTROL (TYPE 3)

SEQUENCE	ITEM DESCRIPTION	MATERIAL		APPLICATION RATE
		DESCRIPTION	TYPE	
STEP 1	COMPOST (TYPE 1)	COMPOST	MEDIUM	2" DEPTH
		SEED	--	45 LB/ACRE
STEP 2	ROLLED EROSION CONTROL PRODUCT (NETTING)	NETTING	TYPE A	--

EROSION CONTROL (TYPE 4)

SEQUENCE	ITEM DESCRIPTION	MATERIAL		APPLICATION RATE
		DESCRIPTION	TYPE	
STEP 1	EROSION CONTROL (BONDED FIBER MATRIX)	TACKIFIER	BONDED FIBER MATRIX	500 LB/ACRE
		SEED	--	45 LB/ACRE
		FERTILIZER	ORGANIC	1200 LB/ACRE
STEP 2	EROSION CONTROL (BONDED FIBER MATRIX)	TACKIFIER	BONDED FIBER MATRIX	3500 LB/ACRE

SEED MIX

BOTANICAL NAME (COMMON NAME)	PERCENT GERMINATION (MINIMUM)	POUNDS PURE LIVE SEED PER ACRE (SLOPE MEASUREMENT)
BROMUS CARINATUS[1] (CALIFORNIA BROME)	80	15
ESCHSCHOLZIA CALIFORNICUM (CALIFORNIA POPPY)	75	3
HORDEUM B. CALIFORNICUM[1] (CALIFORNIA BARLEY)	80	9
LUPINUS BICOLOR[1] (PIGMY-LEAVED LUPINE)	80	9
NASSELLA PULCHRA[1] (PURPLE NEEDLEGRASS)	70	9

[1] SEED PRODUCTED IN NORTHERN CALIFORNIA ONLY.

EROSION CONTROL LEGEND

ECL-1

REVISED BY | DATE REVISED
J. WILLIAMSON | J. KURTH
CALCULATED-DESIGNED BY | CHECKED BY
SENIOR LANDSCAPE ARCHITECT
T CHRIS JOHNSON

STATE OF CALIFORNIA - DEPARTMENT OF TRANSPORTATION
Caltrans® LANDSCAPE ARCHITECTURE

LAST REVISION 12-07-12
DATE PLOTTED => 20-DEC-2012
TIME PLOTTED => 14:31

Dist	COUNTY	ROUTE	POST MILES TOTAL PROJECT	SHEET No.	TOTAL SHEETS
03	ED	49	3.8	10	30

LICENSED LANDSCAPE ARCHITECT

12-10-12
PLANS APPROVAL DATE

LICENSED LANDSCAPE ARCHITECT JAMES G. WILLIAMSON No. 5415 Signature 02-28-14 Renewal Date 12-07-12 Date STATE OF CALIFORNIA

THE STATE OF CALIFORNIA OR ITS OFFICERS OR AGENTS SHALL NOT BE RESPONSIBLE FOR THE ACCURACY OR COMPLETENESS OF SCANNED COPIES OF THIS PLAN SHEET.

NOTE:

FOR ACCURATE RIGHT OF WAY DATA, CONTACT
RIGHT OF WAY ENGINEERING AT THE DISTRICT OFFICE.

LEDEND:

EROSION CONTROL (TYPE 1)
- COMPOST (TYPE 1)

EROSION CONTROL (TYPE 2)
- COMPOST (TYPE 2)
- INCORPOATE MATERIALS
- COMPOST (TYPE 1)

EROSION CONTROL (TYPE 3)
- COMPOST (TYPE 1)
- ROLLED EROSION CONTROL PRODUCT (NETTING)

EROSION CONTROL (TYPE 4)
- EROSION CONTROL (BONDED FIBER MATRIX)

X / X — EROSION CONTROL SHEET / EROSION CONTROL LOCATION

---------- CUT/FILL LINE

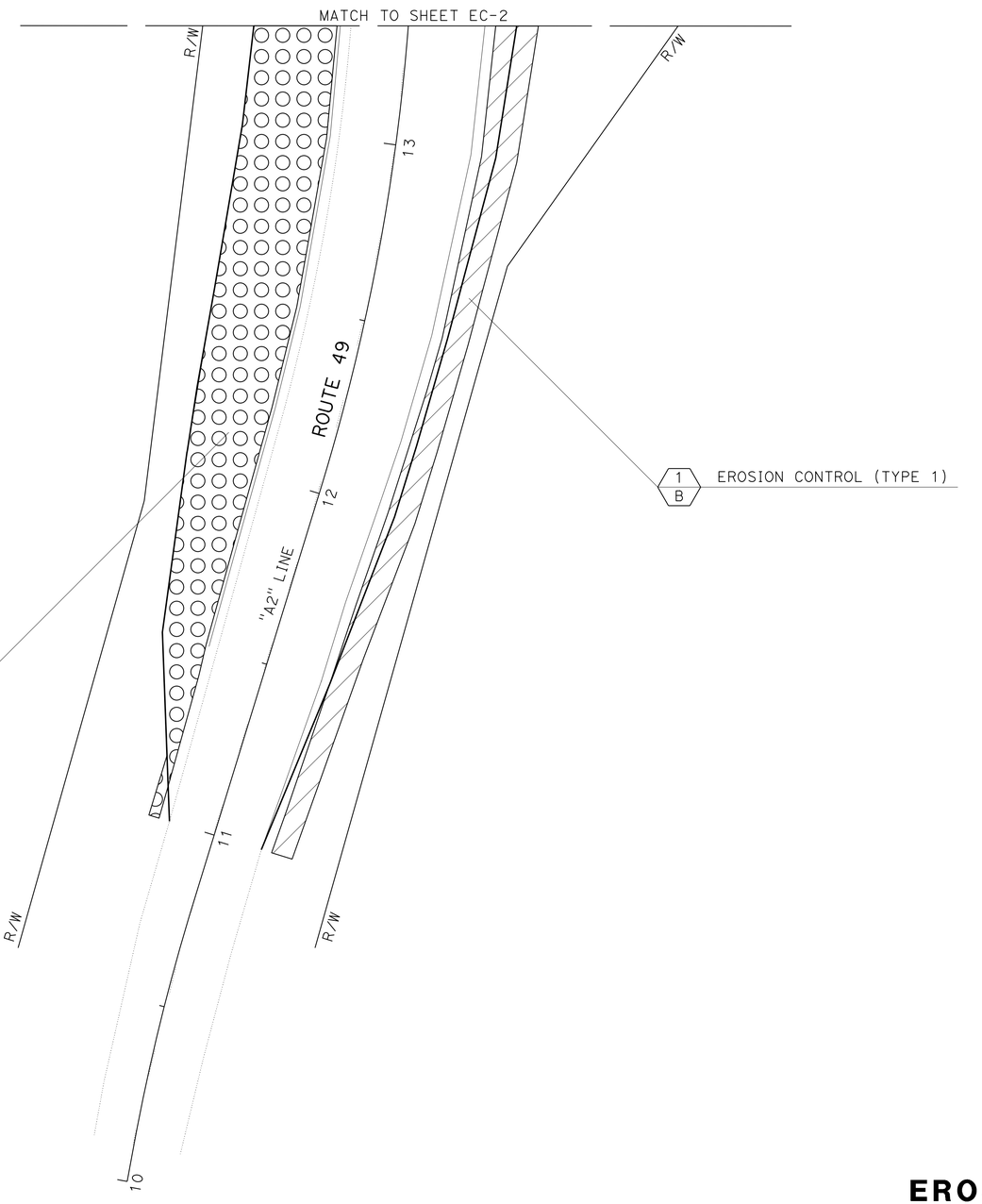

APPROVED FOR EROSION CONTROL WORK ONLY

EROSION CONTROL PLAN

SCALE 1"=20'

EC-1

STATE OF CALIFORNIA - DEPARTMENT OF TRANSPORTATION
Caltrans® LANDSCAPE ARCHITECTURE

SENIOR LANDSCAPE ARCHITECT: T CHRIS JOHNSON
CALCULATED-DESIGNED BY: J. WILLIAMSON
CHECKED BY: J. KURTH
REVISED BY / DATE REVISED

LAST REVISION 12-07-12 | DATE PLOTTED => 20-DEC-2012 | TIME PLOTTED => 14:31

Dist	COUNTY	ROUTE	POST MILES TOTAL PROJECT	SHEET No.	TOTAL SHEETS
03	ED	49	3.8	11	30

LICENSED LANDSCAPE ARCHITECT

12-10-12
PLANS APPROVAL DATE

LICENSED LANDSCAPE ARCHITECT
JAMES G. WILLIAMSON
No. 5415
Signature
02-28-14
Renewal Date
12-07-12
Date
STATE OF CALIFORNIA

THE STATE OF CALIFORNIA OR ITS OFFICERS OR AGENTS SHALL NOT BE RESPONSIBLE FOR THE ACCURACY OR COMPLETENESS OF SCANNED COPIES OF THIS PLAN SHEET.

NOTE:

FOR ACCURATE RIGHT OF WAY DATA, CONTACT RIGHT OF WAY ENGINEERING AT THE DISTRICT OFFICE.

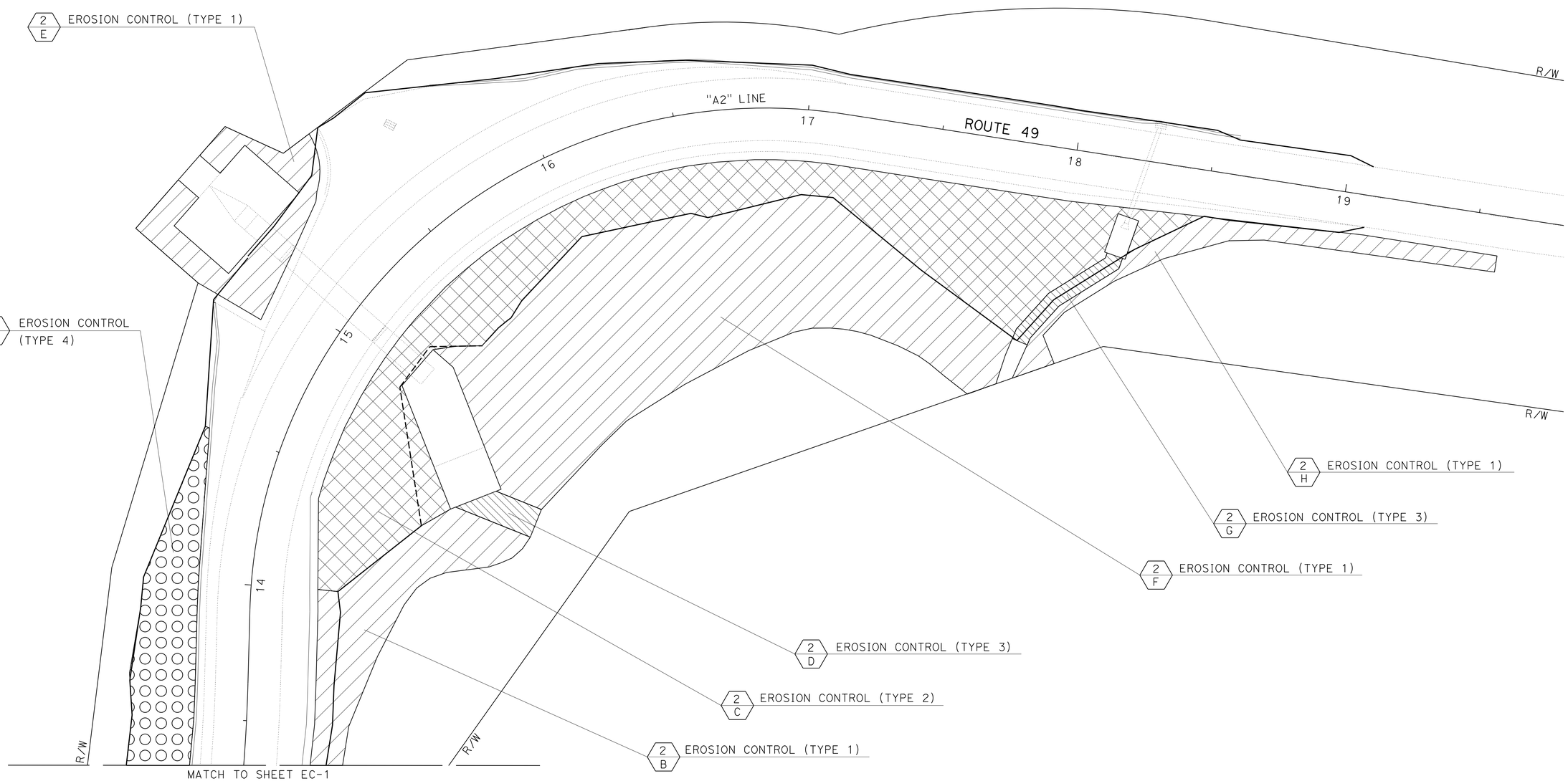

EROSION CONTROL PLAN

SCALE 1"=20'

APPROVED FOR EROSION CONTROL WORK ONLY

EC-2

REVISED BY	DATE REVISED

CALCULATED-DESIGNED BY: J. WILLIAMSON
CHECKED BY: J. KURTH
SENIOR LANDSCAPE ARCHITECT: T CHRIS JOHNSON

STATE OF CALIFORNIA - DEPARTMENT OF TRANSPORTATION
Caltrans® LANDSCAPE ARCHITECTURE

LAST REVISION 12-07-12
DATE PLOTTED => 20-DEC-2012
TIME PLOTTED => 14:31

Dist	COUNTY	ROUTE	POST MILES TOTAL PROJECT	SHEET No.	TOTAL SHEETS
03	ED	49	3.8	12	30

LICENSED LANDSCAPE ARCHITECT

12-10-12
PLANS APPROVAL DATE

LICENSED LANDSCAPE ARCHITECT JAMES G. WILLIAMSON No. 5415 Signature 02-28-14 Renewal Date 12-07-12 Date STATE OF CALIFORNIA

THE STATE OF CALIFORNIA OR ITS OFFICERS OR AGENTS SHALL NOT BE RESPONSIBLE FOR THE ACCURACY OR COMPLETENESS OF SCANNED COPIES OF THIS PLAN SHEET.

NOTE:

1. EROSION CONTROL (BONDED FIBER MATRIX) SHALL BE APPLIED TO AREAS OF SOIL BETWEEN EXPOSED ROCK.

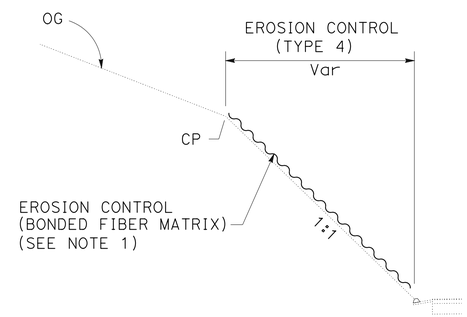

EROSION CONTROL TYPICAL CROSS SECTION

Sta "A2" 11+00 to 14+50 Lt

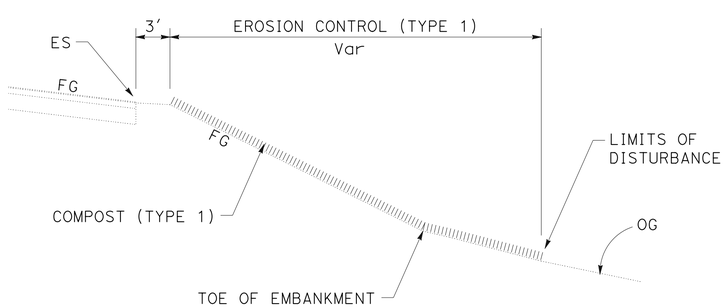

EROSION CONTROL TYPICAL CROSS SECTION

Sta "A2" 11+00 to 14+00 Rt
Sta "A2" 18+50 to 19+58 Rt

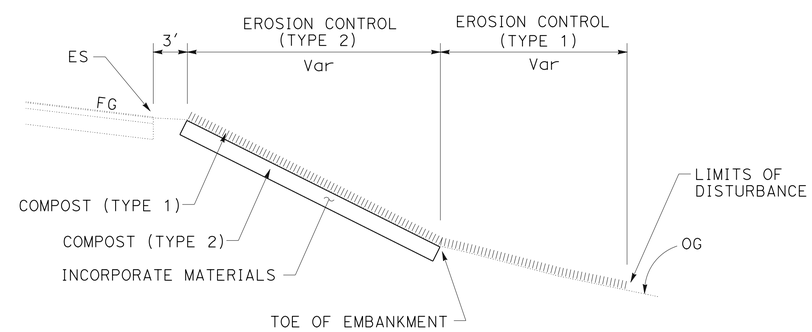

EROSION CONTROL TYPICAL CROSS SECTION

Sta "A2" 14+00 to 18+50 Rt

EROSION CONTROL DETAILS

NO SCALE

APPROVED FOR EROSION CONTROL WORK ONLY

ECD-1

STATE OF CALIFORNIA - DEPARTMENT OF TRANSPORTATION
Caltrans® LANDSCAPE ARCHITECTURE

SENIOR LANDSCAPE ARCHITECT: T CHRIS JOHNSON
CALCULATED-DESIGNED BY: J. WILLIAMSON
CHECKED BY: J. KURTH
REVISED BY
DATE REVISED

LAST REVISION 12-07-12
DATE PLOTTED => 20-DEC-2012
TIME PLOTTED => 14:31

Dist	COUNTY	ROUTE	POST MILES TOTAL PROJECT	SHEET No.	TOTAL SHEETS
03	ED	49	3.8	13	30

LICENSED LANDSCAPE ARCHITECT

12-10-12
PLANS APPROVAL DATE

LICENSED LANDSCAPE ARCHITECT JAMES G. WILLIAMSON No. 5415 Signature 02-28-14 Renewal Date 12-07-12 Date STATE OF CALIFORNIA

THE STATE OF CALIFORNIA OR ITS OFFICERS OR AGENTS SHALL NOT BE RESPONSIBLE FOR THE ACCURACY OR COMPLETENESS OF SCANNED COPIES OF THIS PLAN SHEET.

NOTES:

1. FOR CLARITY, PERSPECTIVE VIEW DOES NOT SHOW ALL STAPLES.
2. ANCHOR RECP (NETTING) INTO RSP.
3. STEEL STAPLES TO BE PLACED 0'-6" ON CENTER ALONG THE LENGTH OF THE LONGITUDINAL AND TRANSVERSE TRENCHES.
4. KEY TRENCH SHALL BE PLACED AT THE UPSTREAM END OF THE RECP (NETTING) ONLY.

LEGEND:

X — EROSION CONTROL SHEET
X — EROSION CONTROL LOCATION

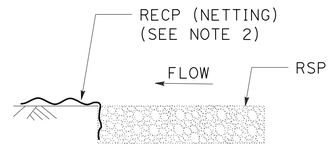

DETAIL B
KEY TRENCH
SECTION

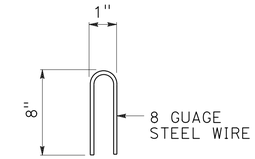

STAPLE DETAIL

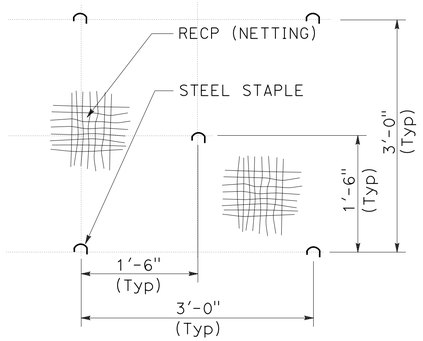

DETAIL A
STAPLE PATTERN
PLAN

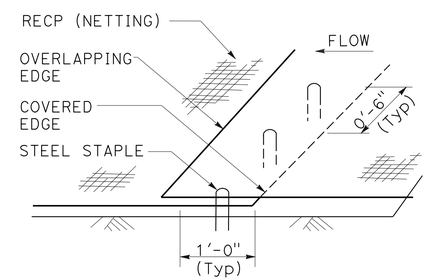

DETAIL C
TRANSVERSE JOINT
PERSPECTIVE

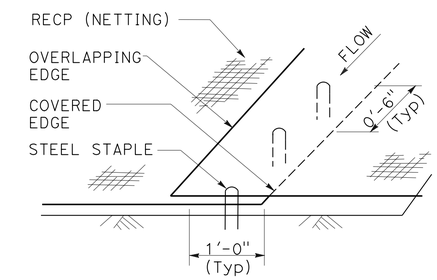

DETAIL D
LONGITUDINAL JOINT
PERSPECTIVE

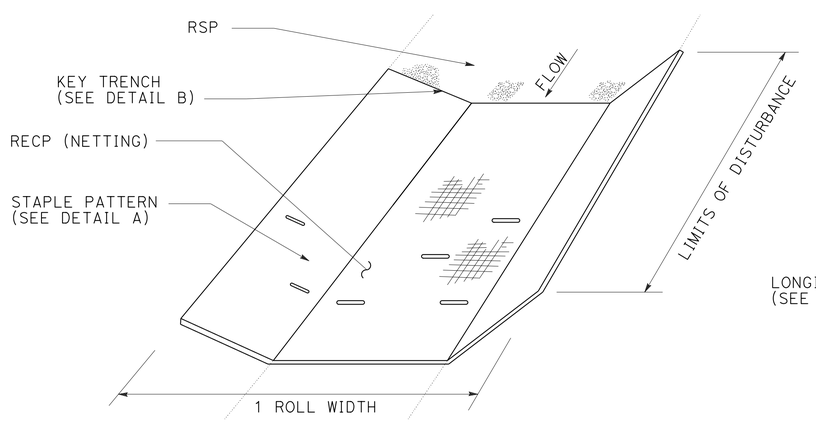

RECP (NETTING) DETAIL
PERSPECTIVE

2/G

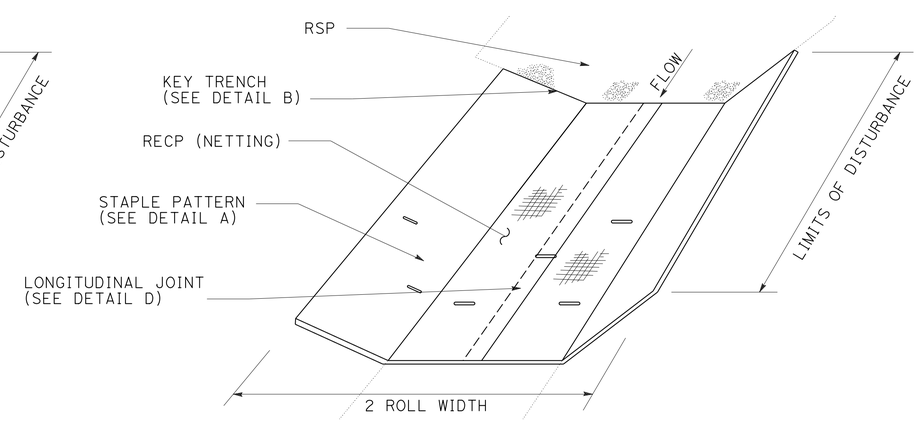

RECP (NETTING) DETAIL
PERSPECTIVE

2/D

APPROVED FOR EROSION CONTROL WORK ONLY

EROSION CONTROL DETAILS
NO SCALE

ECD-2

STATE OF CALIFORNIA - DEPARTMENT OF TRANSPORTATION
Caltrans® LANDSCAPE ARCHITECTURE
SENIOR LANDSCAPE ARCHITECT: T CHRIS JOHNSON
CALCULATED-DESIGNED BY: J. WILLIAMSON
CHECKED BY: J. KURTH
REVISED BY
DATE REVISED

LAST REVISION 12-07-12
DATE PLOTTED => 20-DEC-2012
TIME PLOTTED => 14:31

Dist	COUNTY	ROUTE	POST MILES TOTAL PROJECT	SHEET No.	TOTAL SHEETS
03	ED	49	3.8	14	30

LICENSED LANDSCAPE ARCHITECT

12-10-12
PLANS APPROVAL DATE

LICENSED LANDSCAPE ARCHITECT JAMES G. WILLIAMSON No. 5415 Signature 02-28-14 Renewal Date 12-07-12 Date STATE OF CALIFORNIA

THE STATE OF CALIFORNIA OR ITS OFFICERS OR AGENTS SHALL NOT BE RESPONSIBLE FOR THE ACCURACY OR COMPLETENESS OF SCANNED COPIES OF THIS PLAN SHEET.

EROSION CONTROL

SHEET	EROSION CONTROL LOCATION	DESCRIPTION	COMPOST (TYPE 1)	COMPOST (TYPE 2)	INCORPORATE MATERIALS	EROSION CONTROL (BONDED FIBER MATRIX)	ROLLED EROSION CONTROL PRODUCT (NETTING)
			SQFT	SQFT	SQFT	SQFT	SQFT
EC-1	A	EC TYPE 4	--	--	--	5,640	--
	B	EC TYPE 1	2,230	--	--	--	--
EC-2	A	EC TYPE 4	--	--	--	3,080	--
	B	EC TYPE 1	2,375	--	--	--	--
	C	EC TYPE 2	10,150	10,150	10,150	--	--
	D	EC TYPE 3	275	--	--	--	275
	E	EC TYPE 1	1,640	--	--	--	--
	F	EC TYPE 1	11,300	--	--	--	--
	G	EC TYPE 3	310	--	--	--	310
	H	EC TYPE 1	1,380	--	--	--	--
		TOTAL	29,660	10,150	10,150	8,720	585

EROSION CONTROL QUANTITIES

ECQ-1

STATE OF CALIFORNIA - DEPARTMENT OF TRANSPORTATION
Caltrans LANDSCAPE ARCHITECTURE
SENIOR LANDSCAPE ARCHITECT T CHRIS JOHNSON
CALCULATED-DESIGNED BY J. WILLIAMSON
CHECKED BY J. KURTH
REVISED BY
DATE REVISED

LAST REVISION 11-08-12
DATE PLOTTED => 20-DEC-2012
TIME PLOTTED => 14:31

Dist	COUNTY	ROUTE	POST MILES TOTAL PROJECT	SHEET No.	TOTAL SHEETS
03	ED	49	3.8	15	30

Kris M. Albers 12-10-12
REGISTERED CIVIL ENGINEER DATE

12-10-12
PLANS APPROVAL DATE

REGISTERED PROFESSIONAL ENGINEER
KRIS M. ALBERS
No. 49986
Exp. 06-30-13
CIVIL
STATE OF CALIFORNIA

THE STATE OF CALIFORNIA OR ITS OFFICERS OR AGENTS SHALL NOT BE RESPONSIBLE FOR THE ACCURACY OR COMPLETENESS OF SCANNED COPIES OF THIS PLAN SHEET.

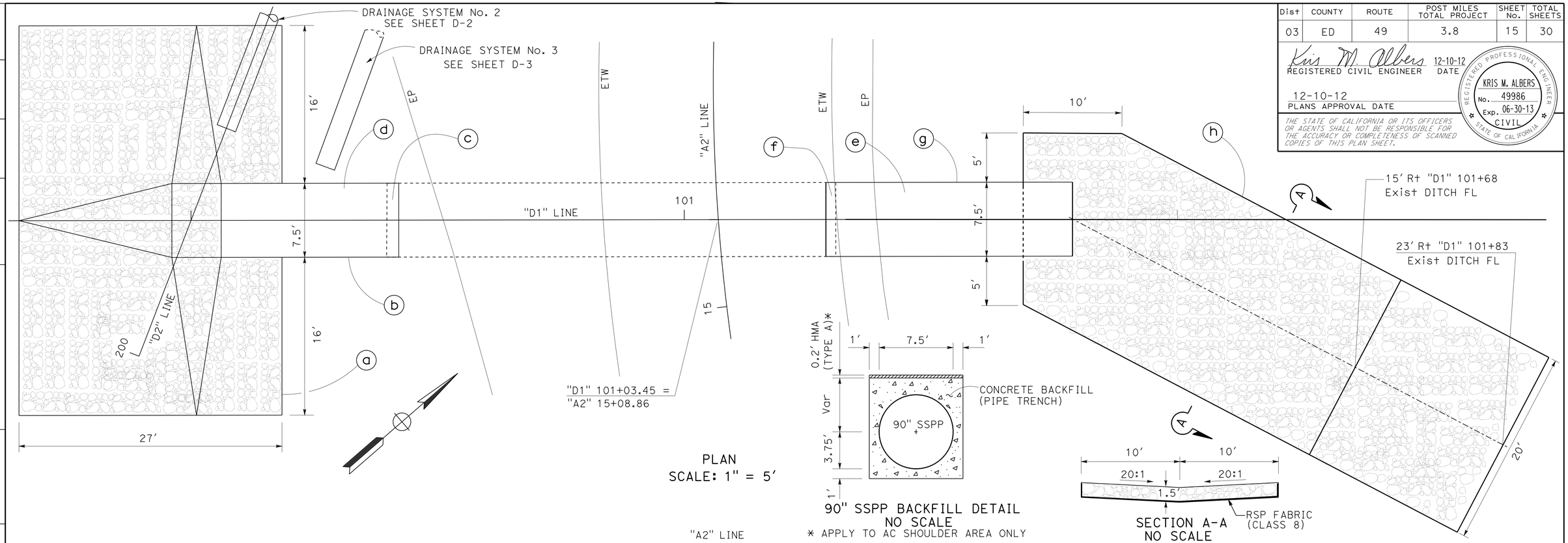

PLAN
SCALE: 1" = 5′

90" SSPP BACKFILL DETAIL
NO SCALE
* APPLY TO AC SHOULDER AREA ONLY

SECTION A-A
NO SCALE

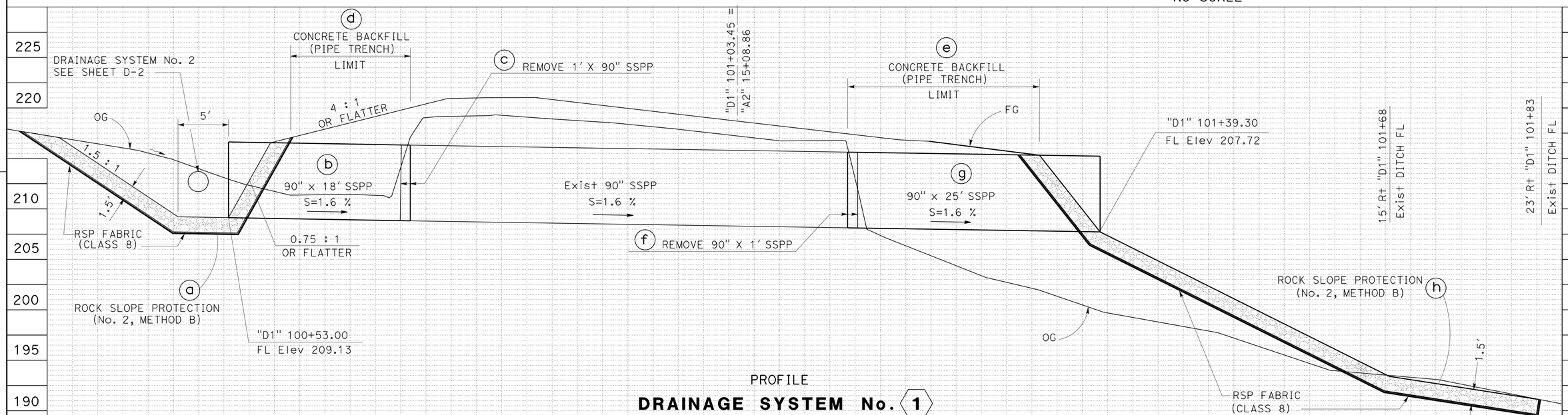

PROFILE
DRAINAGE SYSTEM No. 1
"A2" 15+08.86
SCALE: 1" = 5′

APPROVED FOR DRAINAGE WORK ONLY

DRAINAGE PLAN, PROFILE AND DETAILS

SCALE AS SHOWN

D-1

REVISED BY	DATE REVISED

CALCULATED-DESIGNED BY: A. G. CHIN
CHECKED BY: KRIS ALBERS
FUNCTIONAL SUPERVISOR: STEPHEN WRIGHT

STATE OF CALIFORNIA - DEPARTMENT OF TRANSPORTATION
Caltrans® TRAFFIC

LAST REVISION 12-03-12
DATE PLOTTED => 20-DEC-2012
TIME PLOTTED => 14:31

Dist	COUNTY	ROUTE	POST MILES TOTAL PROJECT	SHEET No.	TOTAL SHEETS
03	ED	49	3.8	16	30

Kris M. Albers 12-10-12
REGISTERED CIVIL ENGINEER DATE

12-10-12
PLANS APPROVAL DATE

REGISTERED PROFESSIONAL ENGINEER
KRIS M. ALBERS
No. 49986
Exp. 06-30-13
CIVIL
STATE OF CALIFORNIA

THE STATE OF CALIFORNIA OR ITS OFFICERS OR AGENTS SHALL NOT BE RESPONSIBLE FOR THE ACCURACY OR COMPLETENESS OF SCANNED COPIES OF THIS PLAN SHEET.

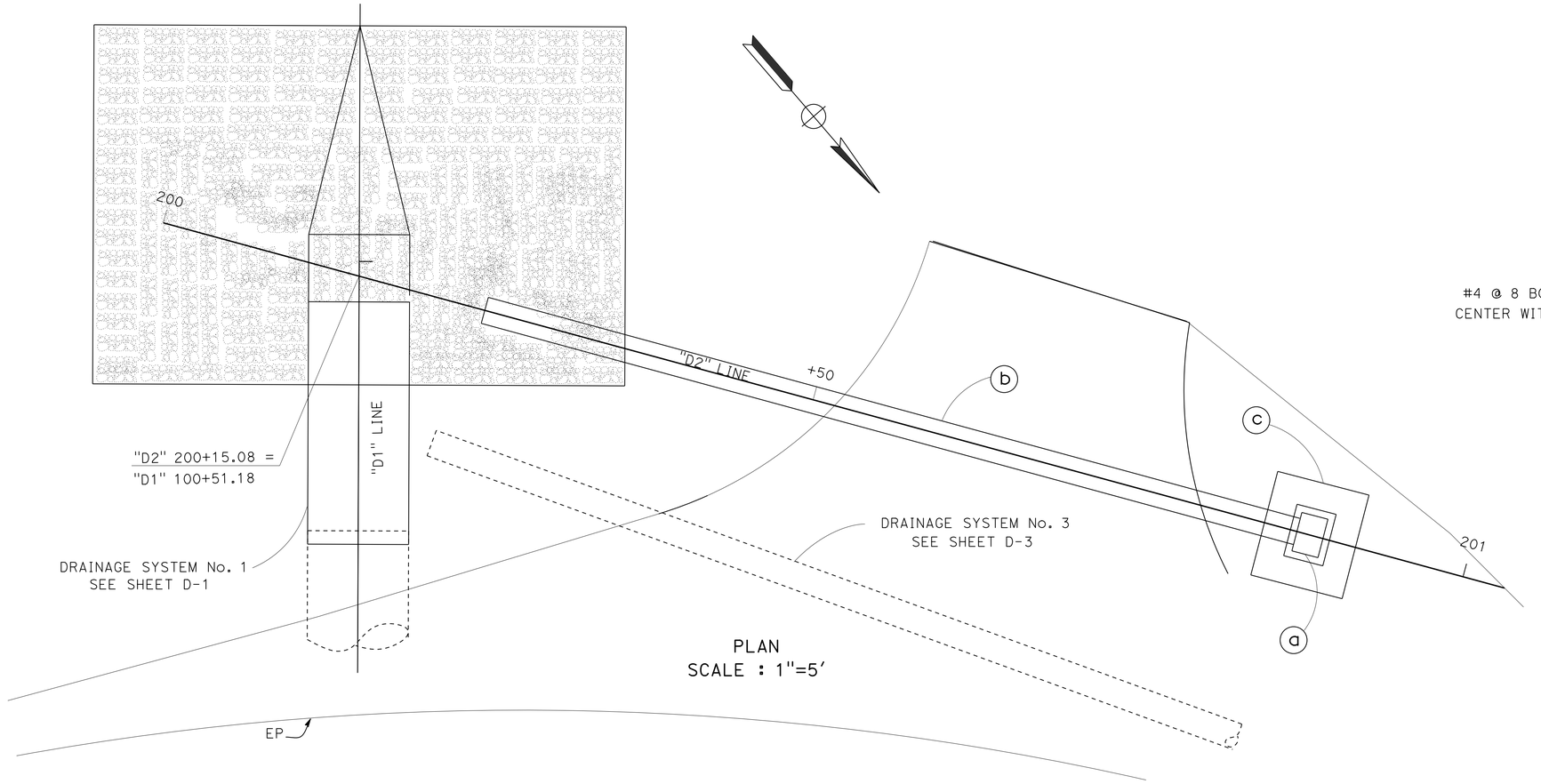

PLAN
SCALE : 1"=5'

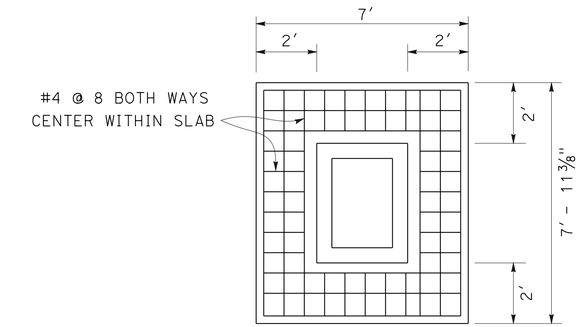

PLAN

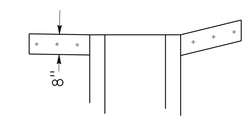

SECTION
CONCRETE APRON DETAILS
NO SCALE

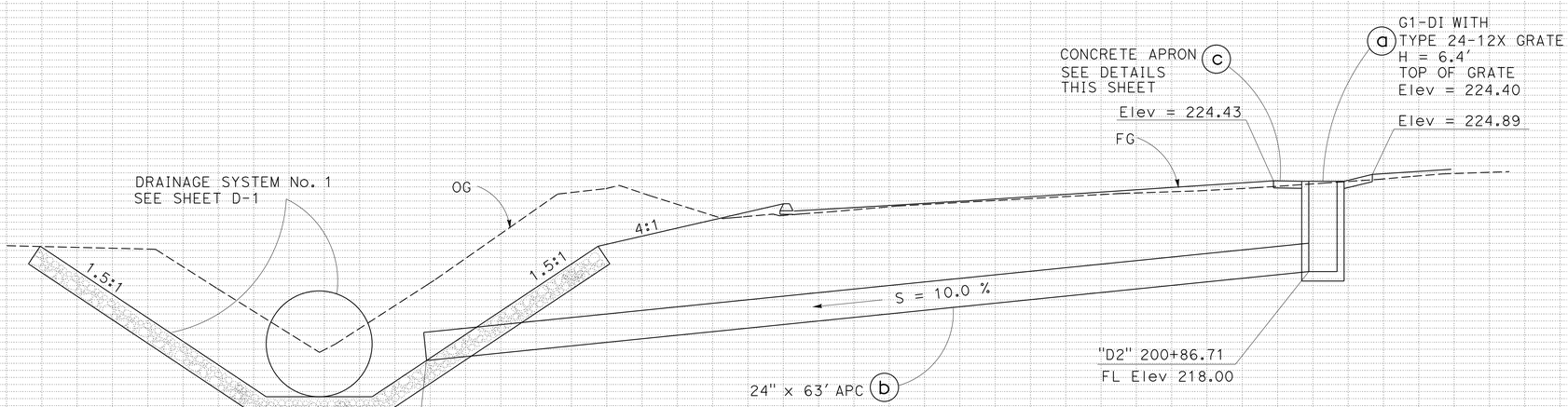

DRAINAGE SYSTEM No. 2
PROFILE
SCALE : 1"=5'

APPROVED FOR DRAINAGE WORK ONLY

DRAINAGE PLAN, PROFILE AND DETAILS

SCALE AS SHOWN

D-2

REVISED BY	DATE REVISED
A. G. CHIN	KRIS ALBERS
CALCULATED-DESIGNED BY	CHECKED BY
FUNCTIONAL SUPERVISOR	STEPHEN WRIGHT

STATE OF CALIFORNIA - DEPARTMENT OF TRANSPORTATION
Caltrans
TRAFFIC

LAST REVISION 12-03-12 | DATE PLOTTED => 20-DEC-2012 | TIME PLOTTED => 15:43

Dist	COUNTY	ROUTE	POST MILES TOTAL PROJECT	SHEET No.	TOTAL SHEETS
03	ED	49	3.8	17	30

Kris M. Albers 12-10-12
REGISTERED CIVIL ENGINEER DATE

12-10-12
PLANS APPROVAL DATE

REGISTERED PROFESSIONAL ENGINEER
KRIS M. ALBERS
No. 49986
Exp. 06-30-13
CIVIL
STATE OF CALIFORNIA

THE STATE OF CALIFORNIA OR ITS OFFICERS OR AGENTS SHALL NOT BE RESPONSIBLE FOR THE ACCURACY OR COMPLETENESS OF SCANNED COPIES OF THIS PLAN SHEET.

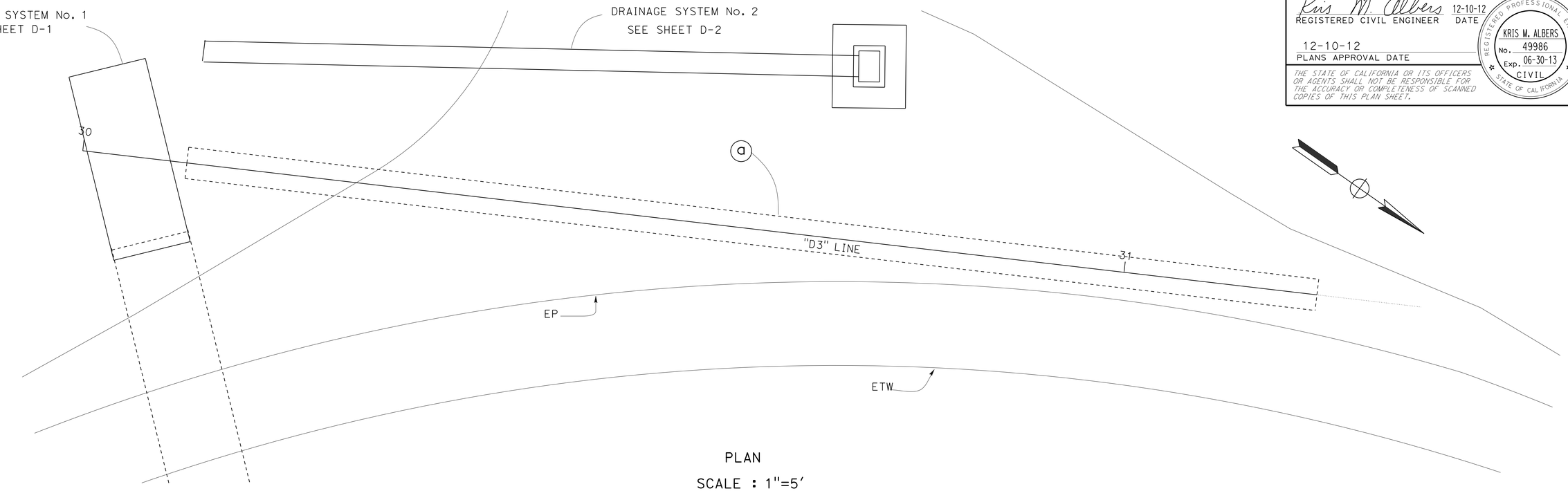

PLAN
SCALE : 1"=5'

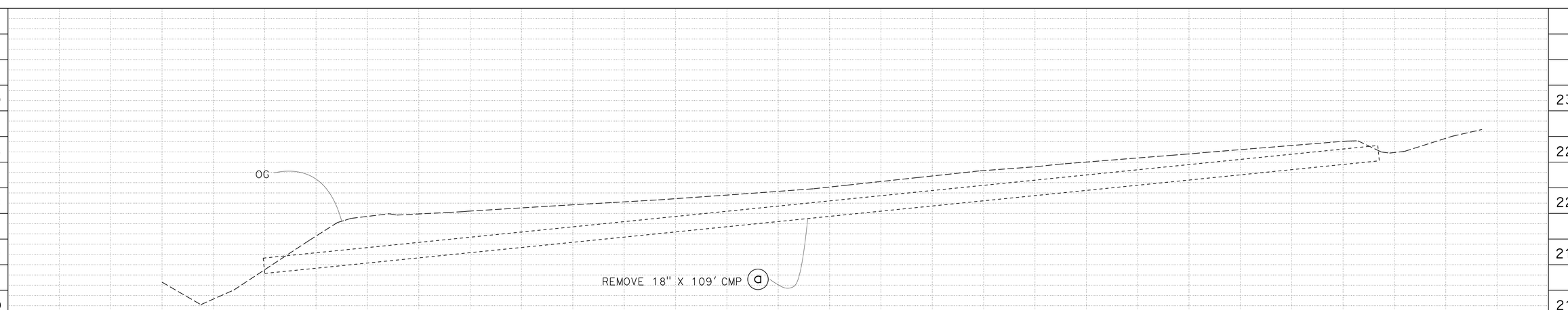

DRAINAGE SYSTEM No. 3
PROFILE
SCALE : 1"=5'

APPROVED FOR DRAINAGE WORK ONLY

DRAINAGE PLAN, PROFILE AND DETAILS
SCALE AS SHOWN

D-3

REVISED BY	DATE REVISED

A. G. CHIN — KRIS ALBERS
CALCULATED-DESIGNED BY — CHECKED BY
FUNCTIONAL SUPERVISOR: STEPHEN WRIGHT

STATE OF CALIFORNIA - DEPARTMENT OF TRANSPORTATION
Caltrans
TRAFFIC

LAST REVISION 12-03-12
DATE PLOTTED => 20-DEC-2012
TIME PLOTTED => 14:31

Dist	COUNTY	ROUTE	POST MILES TOTAL PROJECT	SHEET No.	TOTAL SHEETS
03	ED	49	3.8	18	30

Kris M. Albers 12-10-12
REGISTERED CIVIL ENGINEER DATE

12-10-12
PLANS APPROVAL DATE

REGISTERED PROFESSIONAL ENGINEER
KRIS M. ALBERS
No. 49986
Exp. 06-30-13
CIVIL
STATE OF CALIFORNIA

THE STATE OF CALIFORNIA OR ITS OFFICERS OR AGENTS SHALL NOT BE RESPONSIBLE FOR THE ACCURACY OR COMPLETENESS OF SCANNED COPIES OF THIS PLAN SHEET.

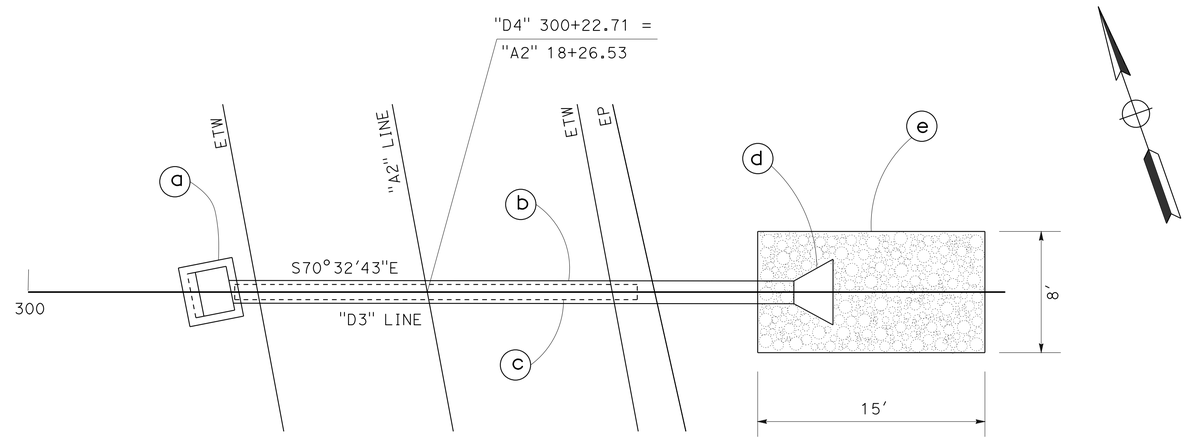

PLAN
SCALE : 1"=5'

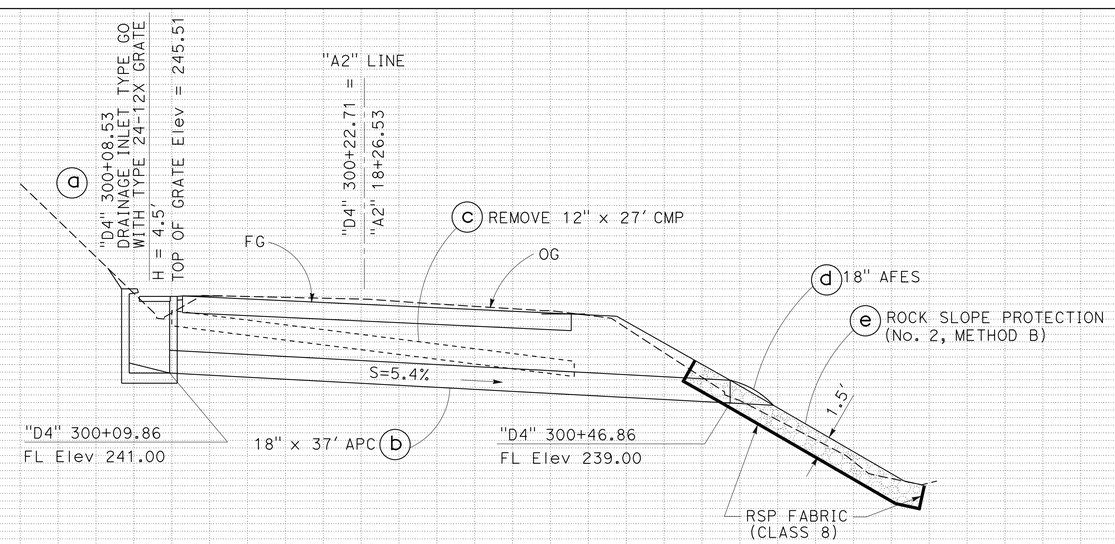

PROFILE
DRAINAGE SYSTEM No. 4
"A2" 18+26.53
SCALE : 1"=5'

APPROVED FOR DRAINAGE WORK ONLY

DRAINAGE PLAN, PROFILE AND DETAILS
SCALE : AS SHOWN

D-4

REVISED BY	DATE REVISED

CALCULATED-DESIGNED BY: A. G. CHIN
CHECKED BY: KRIS ALBERS
FUNCTIONAL SUPERVISOR: STEPHEN WRIGHT

STATE OF CALIFORNIA - DEPARTMENT OF TRANSPORTATION
Caltrans
TRAFFIC

LAST REVISION 12-03-12
DATE PLOTTED => 20-DEC-2012
TIME PLOTTED => 14:31

Dist	COUNTY	ROUTE	POST MILES TOTAL PROJECT	SHEET No.	TOTAL SHEETS
03	ED	49	3.8	19	30

Kris M. Albers 12-10-12
REGISTERED CIVIL ENGINEER DATE

12-10-12
PLANS APPROVAL DATE

REGISTERED PROFESSIONAL ENGINEER
KRIS M. ALBERS
No. 49986
Exp. 06-30-13
CIVIL
STATE OF CALIFORNIA

THE STATE OF CALIFORNIA OR ITS OFFICERS OR AGENTS SHALL NOT BE RESPONSIBLE FOR THE ACCURACY OR COMPLETENESS OF SCANNED COPIES OF THIS PLAN SHEET.

APC ALLOWABLE PIPE MATERIALS

DESCRIPTION	TYPE		
	RCP CLASS IV	HDPE (TYPE S) **	SSRP (0.109" THICK)
	SIZE	SIZE	SIZE
18" APC	18"	18"	18"
24" APC	24"	24"	24"

** HDPE = HIGH DENSITY POLYETHYLENE CORRUGATED PIPE, SMOOTH INTERIOR.

DRAINAGE QUANTITIES

DRAINAGE SHEET No.	DRAINAGE SYSTEM No.	DRAINAGE UNIT	90" SSPP (.138" THICK)	ALTERNATIVE PIPE CULVERT 24"	ALTERNATIVE PIPE CULVERT 18"	18" ALTERNATIVE FLARED END SECTION	CONCRETE BACKFILL (PIPE TRENCH)	MISCELLANEOUS IRON AND STEEL	MINOR CONCRETE (MINOR STRUCTURE)	ROCK SLOPE PROTECTION (No. 2, METHOD B)	ROCK SLOPE PROTECTION FABRIC (CLASS 8)	REMOVE CULVERT	HMA (TYPE A) *	(N) HEIGHT OF INLET	(N) HEIGHT OF COVER	(N) JOINT CLASSIFICATION	DESCRIPTION	STATION	DRAINAGE SHEET No.	DRAINAGE SYSTEM No.	DRAINAGE UNIT
			LF	LF	LF	EA	CY	LB	CY	CY	SQYD	LF	TON	LF	LF						
D-1	1	a								60	140						RSP (No. 2, METHOD B)	"D1" 101+00.00	D-1	1	a
		b	18														90" SSPP				b
		c										1					REMOVE 90" SSPP				c
		d					26														d
		e					43						1								e
		f										1					REMOVE 90" SSPP				f
		g	25														90" SSPP				g
		h								60	145						RSP (No. 2, METHOD B)				h
D-2	2	a						239	1.64					6.4			TYPE G-1 DI, GRATE TYPE 24-12X	"D2" 200+60.00	D-2	2	a
		b		63											6.6	Std	24" APC				b
		c							1.09								CONCRETE APRON				c
D-3	3	a										109					REMOVE 18" CMP	"D3" 30+00.00	D-3	3	a
D-4	4	a						239	1.71					4.5			TYPE GO DI, GRATE TYPE 24-12X	"D4" 300+30.00	D-4	4	a
		b			37										3.7	Std	18" APC				b
		c										27					REMOVE 12" CMP				c
		d				1											18" AFES				d
		e								7	21						RSP (No. 2, METHOD B)				e
	TOTAL		43	63	37	1	69	478	4.44	127	306	138	1								

(N) - NOT A SEPARATE PAY ITEM, FOR INFORMATION ONLY.
* QUANTITY INCLUDED IN ROADWAY QUANTITIES

A. G. CHIN — CALCULATED-DESIGNED BY
KRIS ALBERS — CHECKED BY
REVISED BY — DATE REVISED
STEPHEN T. WRIGHT — FUNCTIONAL SUPERVISOR

STATE OF CALIFORNIA - DEPARTMENT OF TRANSPORTATION
Caltrans
TRAFFIC

DRAINAGE QUANTITIES
DQ-1

LAST REVISION 04-23-12
DATE PLOTTED => 20-DEC-2012
TIME PLOTTED => 14:31

Dist	COUNTY	ROUTE	POST MILES TOTAL PROJECT	SHEET No.	TOTAL SHEETS
03	ED	49	3.8	20	30

Kris M. Albers 12-10-12
REGISTERED CIVIL ENGINEER DATE

12-10-12
PLANS APPROVAL DATE

REGISTERED PROFESSIONAL ENGINEER
KRIS M. ALBERS
No. 49986
Exp. 06-30-13
CIVIL
STATE OF CALIFORNIA

THE STATE OF CALIFORNIA OR ITS OFFICERS OR AGENTS SHALL NOT BE RESPONSIBLE FOR THE ACCURACY OR COMPLETENESS OF SCANNED COPIES OF THIS PLAN SHEET.

STATIONARY MOUNTED CONSTRUCTION AREA SIGNS

SIGN LETTER	SIGN CODE		PANEL SIZE	SIGN MESSAGE	NUMBER OF POST AND SIZE	NUMBER OF SIGNS
	FEDERAL	CALIFORNIA				
A	W20-1	C23	48" x 48"	ROAD WORK AHEAD	1 - 6" x 6"	2
B	G20-2	C14	36" x 18"	END ROAD WORK	1 - 4" x 4"	2

NOTE: EXACT SIGN LOCATIONS TO BE DETERMINED BY THE ENGINEER.

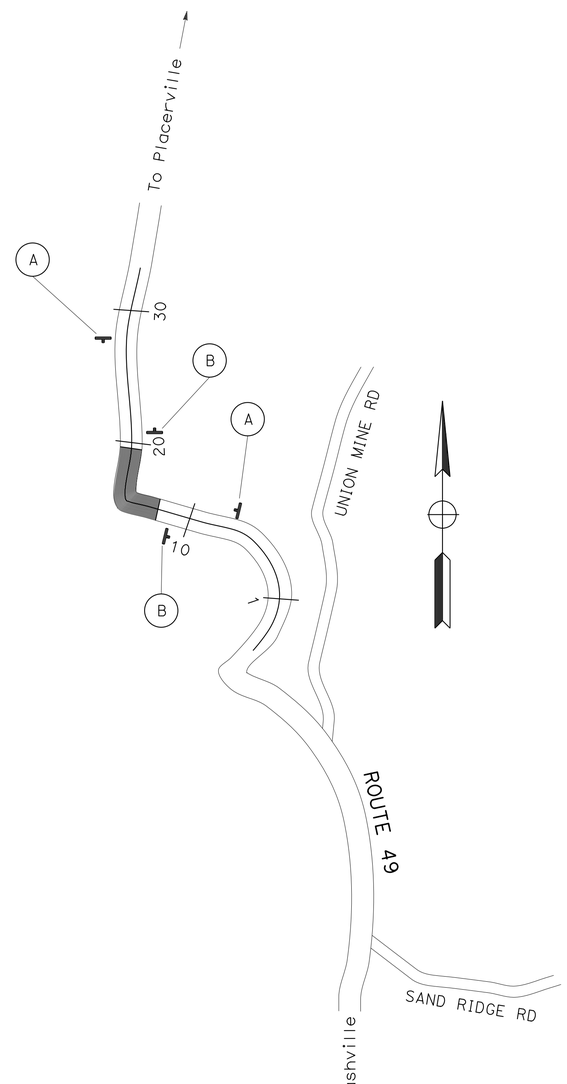

APPROVED FOR CONSTRUCTION AREA SIGN WORK ONLY

CONSTRUCTION AREA SIGNS

NO SCALE

CS-1

STATE OF CALIFORNIA - DEPARTMENT OF TRANSPORTATION
Caltrans
TRAFFIC

FUNCTIONAL SUPERVISOR: ARSHAD IQBAL
CALCULATED-DESIGNED BY: CHUCK COOK
CHECKED BY: KRIS ALBERS
REVISED BY
DATE REVISED

LAST REVISION 12-04-12
DATE PLOTTED => 20-DEC-2012
TIME PLOTTED => 14:31

Dist	COUNTY	ROUTE	POST MILES TOTAL PROJECT	SHEET No.	TOTAL SHEETS
03	ED	49	3.8	21	30

Kris M. Albers 12-10-12
REGISTERED CIVIL ENGINEER DATE

12-10-12
PLANS APPROVAL DATE

REGISTERED PROFESSIONAL ENGINEER
KRIS M. ALBERS
No. 49986
Exp. 06-30-13
CIVIL
STATE OF CALIFORNIA

THE STATE OF CALIFORNIA OR ITS OFFICERS OR AGENTS SHALL NOT BE RESPONSIBLE FOR THE ACCURACY OR COMPLETENESS OF SCANNED COPIES OF THIS PLAN SHEET.

LEGEND

►	DELINEATOR (CLASS 1)
s=	DELINEATOR SPACING
(Sht-No.)	ROADSIDE SIGN NUMBER
<CA>	CALIFORNIA SIGN CODE
■	REMOVE ROADSIDE SIGN

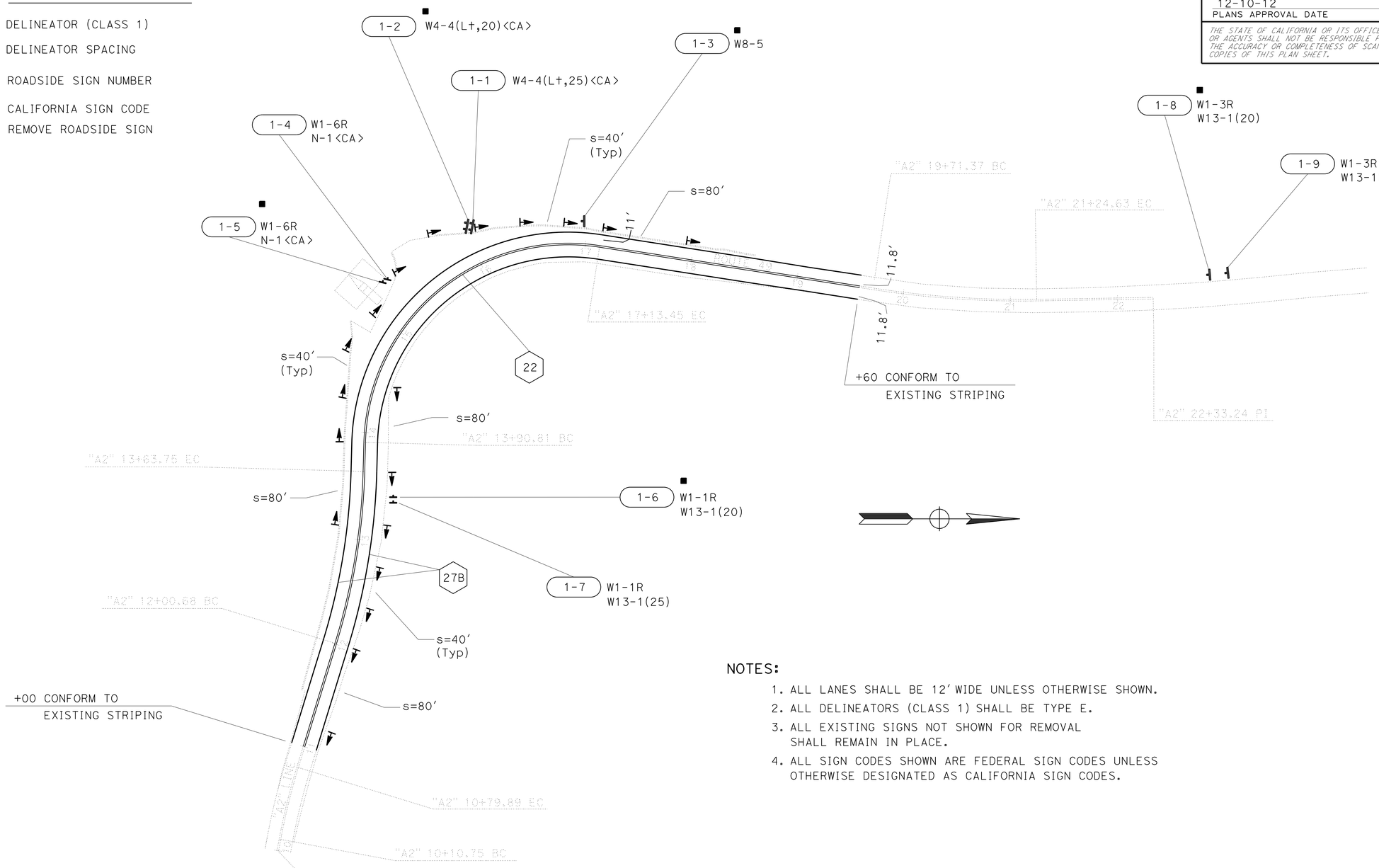

NOTES:

1. ALL LANES SHALL BE 12′ WIDE UNLESS OTHERWISE SHOWN.
2. ALL DELINEATORS (CLASS 1) SHALL BE TYPE E.
3. ALL EXISTING SIGNS NOT SHOWN FOR REMOVAL SHALL REMAIN IN PLACE.
4. ALL SIGN CODES SHOWN ARE FEDERAL SIGN CODES UNLESS OTHERWISE DESIGNATED AS CALIFORNIA SIGN CODES.

PAVEMENT DELINEATION AND SIGN PLAN

SCALE: 1"=50′

APPROVED FOR PAVEMENT DELINEATION AND SIGN WORK ONLY

PD-1

STATE OF CALIFORNIA - DEPARTMENT OF TRANSPORTATION
Caltrans
TRAFFIC

FUNCTIONAL SUPERVISOR: ARSHAD IQBAL
CALCULATED-DESIGNED BY: CHUCK COOK
CHECKED BY: KRIS ALBERS
REVISED BY / DATE REVISED

LAST REVISION 10-17-12 | DATE PLOTTED => 20-DEC-2012 | TIME PLOTTED => 14:31

Dist	COUNTY	ROUTE	POST MILES TOTAL PROJECT	SHEET No.	TOTAL SHEETS
03	ED	49	3.8	22	30

Kris M. Albers 12-10-12
REGISTERED CIVIL ENGINEER DATE

12-10-12
PLANS APPROVAL DATE

REGISTERED PROFESSIONAL ENGINEER
KRIS M. ALBERS
No. 49986
Exp. 06-30-13
CIVIL
STATE OF CALIFORNIA

THE STATE OF CALIFORNIA OR ITS OFFICERS OR AGENTS SHALL NOT BE RESPONSIBLE FOR THE ACCURACY OR COMPLETENESS OF SCANNED COPIES OF THIS PLAN SHEET.

ROADSIDE SIGN PANEL QUANTITIES (CONTRACTOR FURNISHED)

SIGN CODE FEDERAL	SIGN CODE CALIFORNIA	SIGN MESSAGE/DESCRIPTION	PANEL SIZE (L x D) INCHES	PANEL AREA SQFT	NUMBER OF PANELS	BACKGROUND SHEETING COLOR	BACKGROUND RETROREFLECTIVE ASTM TYPE	LEGEND SHEETING COLOR	LEGEND RETROREFLECTIVE ASTM TYPE	PROTECTIVE OVERLAY PREMIUM	FURNISH SINGLE SHEET ALUMINUM SIGN UNFRAMED 0.063" SQFT	UNFRAMED 0.080" SQFT	FRAMED 0.063" SQFT
W1-1R		TURN SYMBOL	36 x 36	9.00	1	YELLOW	III	BLACK		X	9.00		
W1-3R		REVERSE TURN SYMBOL	36 x 36	9.00	1	YELLOW	III	BLACK		X	9.00		
W1-6R		SINGLE HEADED ARROW SYMBOL	48 x 24	8.00	1	YELLOW	IX	BLACK		X		8.00	
	W4-4(L+,25)	CURVE ARROW/ADVISORY SPEED SYMBOL	72 x 72	36.00	1	YELLOW	III	BLACK		X			36.00
W13-1(25)		ADVISORY SPEED PLATE	30 x 30	6.25	2	YELLOW	III	BLACK		X	12.50		
	N-1	OBJECT MARKER TYPE N-1	18 x 18	2.25	1	YELLOW	III			X	2.25		
TOTAL											32.75	8.00	36.00

NOTES:

1. THE W4-4(L+,25)<CA> SHALL BE SQUARE SHAPE.

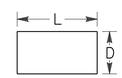

L = LENGTH OF SIGN
D = DEPTH OF SIGN

ROADSIDE SIGN QUANTITIES

SIGN NUMBER (SHT-NO.)	SIGN CODE FEDERAL	SIGN CODE CALIFORNIA	PANEL SIZE INCHES	"C" DIM IN FEET	POST SIZE AND LENGTH METAL POST 2½"x2½"	POST SIZE AND LENGTH 6"x6"	ROADSIDE SIGN ONE POST EACH	ROADSIDE SIGN TWO POST EACH	REMOVE ROADSIDE SIGN EACH
1-1		W4-4(L+,25)	72 x 72	5		18′		1	
1-2		W4-4(L+,20)							1
1-3	W8-5	W42							1
1-4	W1-6R	W57 N-1	48 x 24 18 x 18	4	10′		1		
1-5	W1-6R	W57 N-1							1
1-6	W1-1R W13-1(20)	W3(R+) W6							1
1-7	W1-1R W13-1(25)	W3(R+) W6	36 x 36 30 x 30	4	12′		1		
1-8	W1-3R W13-1(20)	W2(R+) W6							1
1-9	W1-3R W13-1(25)	W2(R+) W6	36 x 36 30 x 30	4	12′		1		
TOTAL							3	1	5

NOTES:

1. EXACT LOCATION AND POSITION OF ROADSIDE SIGNS TO BE DETERMINED BY THE ENGINEER.
2. POST LENGTHS GIVEN ARE APPROXIMATE.
3. "C" DIM = VERTICAL CLEARANCE EP TO BOTTOM OF SIGN PANEL.

4" THERMOPLASTIC TRAFFIC STRIPE

DETAIL NUMBER	LINEAR FEET
22	1,618
27B	1,618
TOTAL	3,236

DELINEATOR

SHEET NUMBER	DELINEATOR (CLASS 1) TYPE E-1 EACH
PD-1	19
TOTAL	19

PAVEMENT MARKER

DETAIL NUMBER	RETROREFLECTIVE TYPE D EACH
22	70
TOTAL	70

PAVEMENT DELINEATION AND SIGN QUANTITIES

PDQ-1

REVISED BY | DATE REVISED
CHUCK COOK | DEANN SPANGLER
CALCULATED-DESIGNED BY | CHECKED BY
FUNCTIONAL SUPERVISOR | ARSHAD IQBAL
STATE OF CALIFORNIA - DEPARTMENT OF TRANSPORTATION
Caltrans
TRAFFIC

LAST REVISION 12-04-12 | DATE PLOTTED => 20-DEC-2012 | TIME PLOTTED => 14:31

Dist	COUNTY	ROUTE	POST MILES TOTAL PROJECT	SHEET No.	TOTAL SHEETS
03	ED	49	3.8	23	30

Kris M. Albers 12-10-12
REGISTERED CIVIL ENGINEER DATE

12-10-12
PLANS APPROVAL DATE

REGISTERED PROFESSIONAL ENGINEER
KRIS M. ALBERS
No. 49986
Exp. 06-30-13
CIVIL
STATE OF CALIFORNIA

THE STATE OF CALIFORNIA OR ITS OFFICERS OR AGENTS SHALL NOT BE RESPONSIBLE FOR THE ACCURACY OR COMPLETENESS OF SCANNED COPIES OF THIS PLAN SHEET.

NOTES:

1. THE SIGN POST SHALL HAVE 7/16" DIAMETER PERFORATIONS 1" ON CENTER ON ALL FOUR SIDES FOR THE FULL LENGTH.
2. USE TWO DRIVE RIVETS TO FASTEN ASSEMBLED SIGN AND SIGN POST INTO ANCHOR SLEEVE. INSTALL DRIVE RIVETS INTO THE SIDES FACING TRAFFIC.
3. ALL METAL SIGN POSTS AND ANCHOR SLEEVES SHALL BE GALVANIZED.
4. ALL ANCHOR SLEEVES SHALL BE EMBEDDED IN PCC.
5. BALANCED SINGLE POST INSTALLATIONS OF SINGLE SHEET ALUMINUM PANEL SIGNS REQUIRE BACK BRACES WHEN 2'-10" OR MORE IN LENGTH.
6. WOOD BLOCK SPACERS ARE NOT REQUIRED FOR SIGNS MOUNTED ON METAL POSTS.
7. ATTACH RECTANGULAR SIGN PANEL TO SIGN POST WITH BOLTS AT TOP AND BOTTOM. CENTER MAY BE ATTACHED WITH EITHER BOLT OR 3/8" DRIVE RIVET.
8. ATTACH DIAMOND SIGN PANEL TO SIGN POST WITH BOLT AT CENTER. TOP AND BOTTOM MAY BE ATTACHED WITH EITHER BOLTS OR 3/8" DRIVE RIVETS.
9. FOR DETAILS NOT SHOWN, SEE STANDARD PLANS RS1 AND RS2.

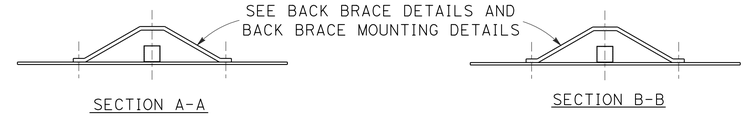

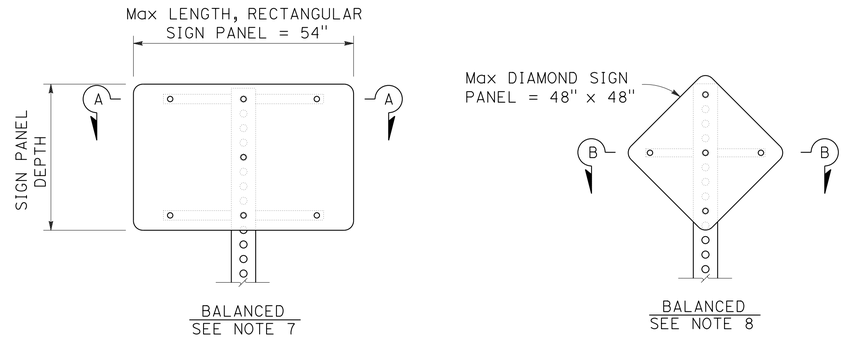

SINGLE POST INSTALLATION

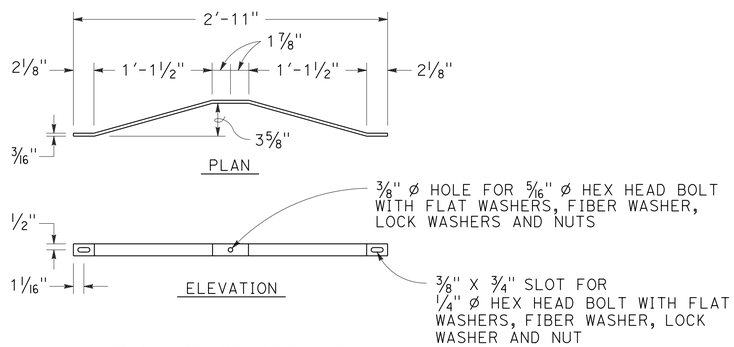

BACK BRACE DETAILS
SEE NOTE 5

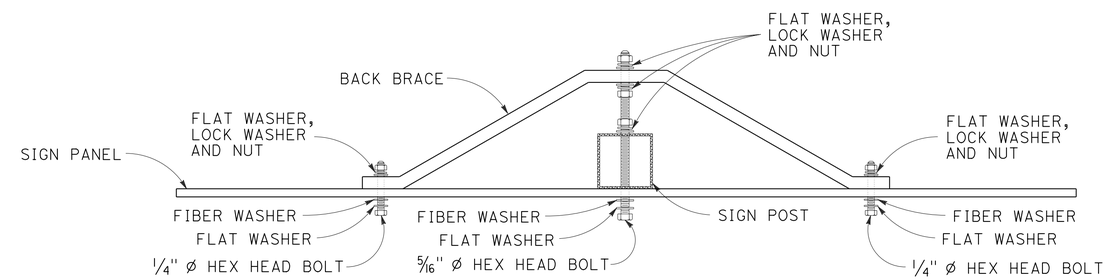

BACK BRACE MOUNTING DETAIL
SEE NOTES 6, 7 AND 8

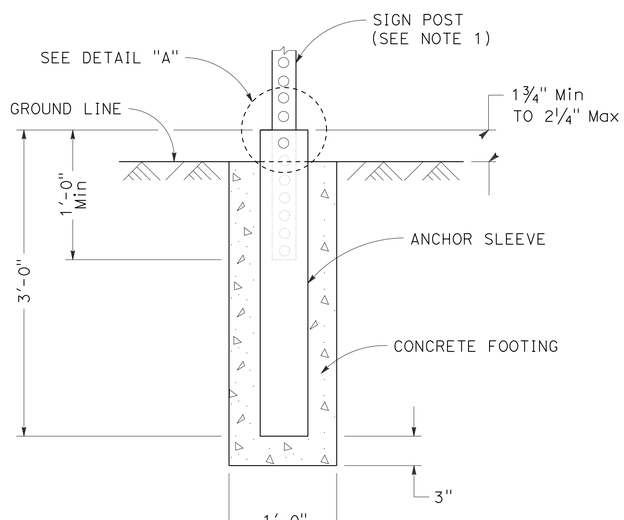

ANCHOR SLEEVE DETAIL

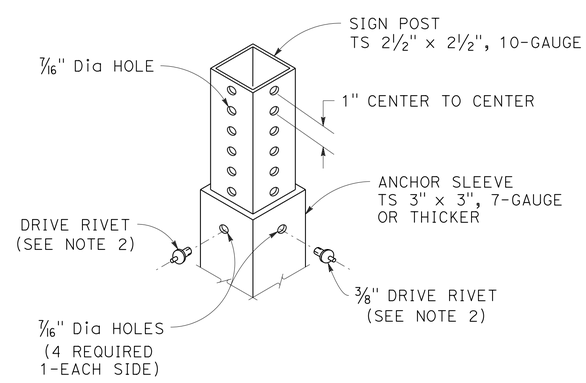

DETAIL "A"

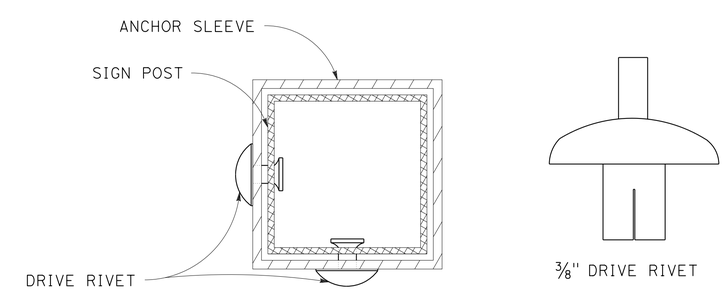

FASTENER DETAILS

SIGN DETAILS

NO SCALE

SD-1

STATE OF CALIFORNIA - DEPARTMENT OF TRANSPORTATION
Caltrans
TRAFFIC

FUNCTIONAL SUPERVISOR: ARSHAD IQBAL
CALCULATED-DESIGNED BY: CHUCK COOK
CHECKED BY: KRIS ALBERS
REVISED BY
DATE REVISED

LAST REVISION 8-07-12
DATE PLOTTED => 20-DEC-2012
TIME PLOTTED => 14:31

Dist	COUNTY	ROUTE	POST MILES TOTAL PROJECT	SHEET No.	TOTAL SHEETS
03	ED	49	3.8	24	30

Kris M. Albers 12-10-12
REGISTERED CIVIL ENGINEER DATE

12-10-12
PLANS APPROVAL DATE

REGISTERED PROFESSIONAL ENGINEER
KRIS M. ALBERS
No. 49986
Exp. 06-30-13
CIVIL
STATE OF CALIFORNIA

THE STATE OF CALIFORNIA OR ITS OFFICERS OR AGENTS SHALL NOT BE RESPONSIBLE FOR THE ACCURACY OR COMPLETENESS OF SCANNED COPIES OF THIS PLAN SHEET.

TEMPORARY WATER POLLUTION CONTROL QUANTITIES

	RAIN EVENT ACTION PLAN	STORM WATER SAMPLING AND ANALYSIS DAY	STORM WATER ANNUAL REPORT	MOVE-IN/MOVE-OUT (TEMPORARY EROSION CONTROL)	TEMPORARY HYDRAULIC MULCH	TEMPORARY COVER	TEMPORARY FIBER ROLL	TEMPORARY LARGE SEDIMENT BARRIER	TEMPORARY CONSTRUCTION ENTRANCE
	EA	EA	EA	EA	SQYD	SQYD	LF	LF	EA
TOTAL	2	2	1	6	1,010	1,010	300	800	1

TREATED WOOD WASTE

	LB
TOTAL	100

ROADWAY QUANTITIES

LOCATION	ROCK EXCAVATION	ROADWAY EXCAVATION	(N) EMBANKMENT	IMPORTED BORROW	HMA (TYPE A) (N) AC STRUCTURE	HMA (TYPE A) (N) COLD PLANE AC PAVEMENT	HMA (TYPE A) (N) Var DEPTH AC OVERLAY	MINOR HMA (N) HMA DIKE (TYPE A)	MINOR HMA (N) AC GUTTER	HMA (OPEN GRADED)	CLASS 2 AB	PLACE HMA DIKE (TYPE A)	PLACE HMA (Misc AREA)	COLD PLANE AC PAVEMENT	TACK COAT	REMOVE FENCE	FENCE (TYPE WM AND BW)
	CY	CY	CY	CY	TON			TON		TON	CY	LF	SQYD	SQYD	TON	LF	LF
L+ "A2" 11+00.00 TO L+ "A2" 19+58.87	120	860	80		140			20	90		250	680	380		0.3	350	350
"A2" 11+00.00 TO "A2" 19+58.87						50	1,200			120				310	4.4		
R+ "A2" 11+00.00 TO R+ "A2" 19+58.87		200	1,200	100	190						240				0.3	750	650
SUBTOTAL	120	1,060	1,280	100	330	50	1,200	20	90	120	490	680	380	310	5.0	1,100	1,000
TOTAL	120	1,060		100	1,580			110		120	490	680	380	310	5.0	1,100	1,000

(N) - FOR INFORMATION ONLY, NOT A SEPARATE PAY ITEM.

SUMMARY OF QUANTITIES

Q-1

STATE OF CALIFORNIA - DEPARTMENT OF TRANSPORTATION
Caltrans
TRAFFIC

FUNCTIONAL SUPERVISOR: STEPHEN T. WRIGHT
CALCULATED-DESIGNED BY: A. G. CHIN
CHECKED BY: KRIS ALBERS
REVISED BY
DATE REVISED

LAST REVISION 04-23-12
DATE PLOTTED => 20-DEC-2012
TIME PLOTTED => 14:31

Dist	COUNTY	ROUTE	POST MILES TOTAL PROJECT	SHEET No.	TOTAL SHEETS
03	ED	49	3.8	25	30

REGISTERED CIVIL ENGINEER 12-7-12 DATE

12-10-12
PLANS APPROVAL DATE

REGISTERED PROFESSIONAL ENGINEER Gurinderpal Bhullar No. C48815 Exp. 9-30-14 CIVIL STATE OF CALIFORNIA

THE STATE OF CALIFORNIA OR ITS OFFICERS OR AGENTS SHALL NOT BE RESPONSIBLE FOR THE ACCURACY OR COMPLETENESS OF SCANNED COPIES OF THIS PLAN SHEET.

NOTES:

Unless otherwise specified in the special provisions, all temporary warning signs shall have black legend on orange background.

California code are designated by (CA). Otherwise, Federal (MUTCD) codes are shown.

TYPICAL LANE CLOSURE WITH REVERSIBLE CONTROL

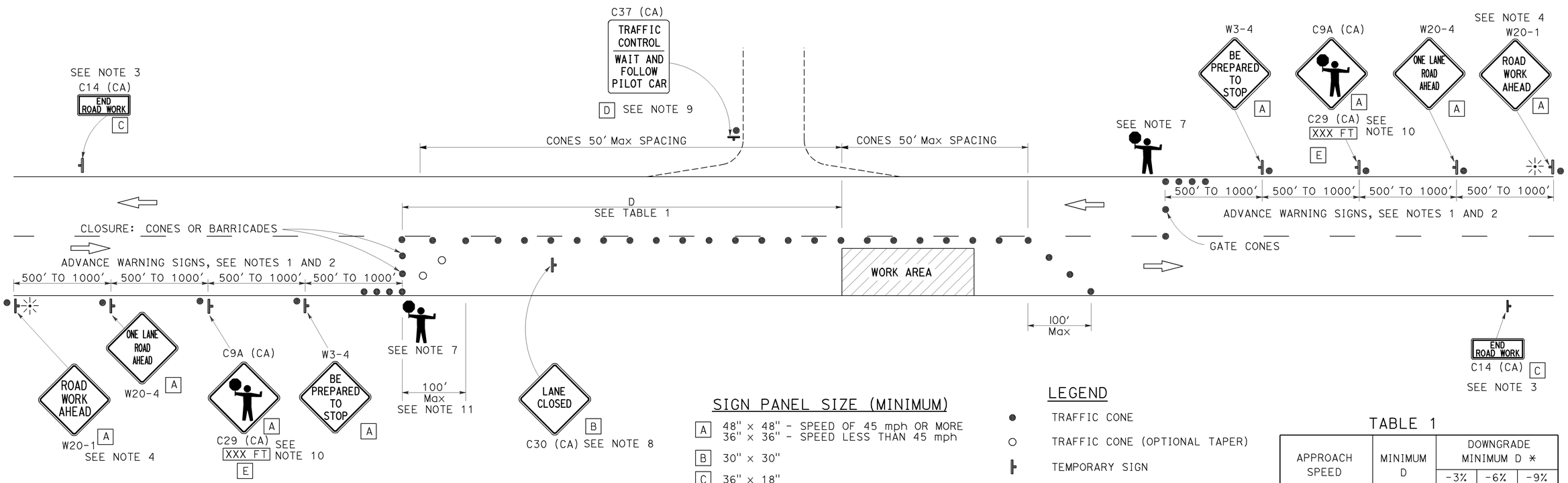

SIGN PANEL SIZE (MINIMUM)

- A: 48" x 48" - SPEED OF 45 mph OR MORE; 36" x 36" - SPEED LESS THAN 45 mph
- B: 30" x 30"
- C: 36" x 18"
- D: 36" x 42"
- E: 36" x 9"

LEGEND

- TRAFFIC CONE
- TRAFFIC CONE (OPTIONAL TAPER)
- TEMPORARY SIGN
- PORTABLE FLASHING BEACON
- FLAGGER

TABLE 1

APPROACH SPEED	MINIMUM D	DOWNGRADE MINIMUM D *		
		-3%	-6%	-9%
mph	ft	ft	ft	ft
25 AND BELOW	155	158	165	173
30	200	205	215	227
35	250	257	271	287
40	305	315	333	354
45	360	378	400	427
50	425	446	474	507
55	495	520	553	593
60	570	598	638	686
65	645	682	728	785

* USE ON SUSTAINED DOWNGRADE STEEPER THAN -3 PERCENT AND LONGER THAN 1 MILE.

NOTES:

1. Where approach speeds are low, advance warning signs may be placed at 300' spacing, and closer in urban areas.
2. Each advance warning sign in each direction of travel shall be equipped with at least two flags for daytime closure. Each flag shall be at least 16" x 16" in size and shall be orange or fluorescent red-orange in color. Flashing beacons shall be placed at the locations indicated for lane closure during hours of darkness.
3. A C14 (CA) "END ROAD WORK" sign, as appropriate, shall be placed at the end of the lane control unless the end of work area is obvious, or ends within a larger project's limits.
4. If the W20-1 sign would follow within 2000' of a stationary W20-1 or C11 (CA) "ROAD WORK NEXT _____MILES", use a W20-4 sign for the first advance warning sign.
5. All cones used for lane closures during the hours of darkness shall be fitted with retroreflective bands (or sleeves) as specified in the specifications.
6. Portable delineators, placed at one-half the spacing indicated for traffic cones, may be used instead of cones for daytime closures only.
7. Additional advance flaggers may be required. Flagger should stand in a conspicuous place, be visible to approaching traffic as well as approaching vehicles after the first vehicle has stopped. During the hours of darkness, the flagging-station and flagger shall be illuminated and clearly visible to approaching traffic. The illumination footprint of the lighting on the ground shall be at least 20' in diameter. Place a minimum of four cones at 50' intervals in advance of flagger station as shown.
8. Place C30 (CA) "LANE CLOSED" sign at 500' to 1000' intervals throughout extended work areas. They are optional if the work area is visible from the flagger station.
9. When a pilot car is used, place a C37 (CA) "TRAFFIC CONTROL-WAIT AND FOLLOW PILOT CAR" sign at all intersections within traffic control area. Signs shall be clean and visible at all times.
10. An optional C29 (CA) sign may be placed below the C9A (CA) sign.
11. Traffic cones or barricades may be placed on the optional taper as shown, barricades shall be Type I, II, or III.

STATE OF CALIFORNIA
DEPARTMENT OF TRANSPORTATION

TRAFFIC CONTROL SYSTEM FOR LANE CLOSURE ON TWO LANE CONVENTIONAL HIGHWAYS

NO SCALE

TCS-1

STATE OF CALIFORNIA - DEPARTMENT OF TRANSPORTATION

Caltrans

FUNCTIONAL SUPERVISOR | CALCULATED-DESIGNED BY | CHECKED BY | REVISED BY | DATE REVISED

LAST REVISION 00-00-00 | DATE PLOTTED => 10-DEC-2012 | TIME PLOTTED => 09:45

Dist	COUNTY	ROUTE	POST MILES TOTAL PROJECT	SHEET No.	TOTAL SHEETS
03	ED	49	3.8	26	30

Raymond Don Tsztoo
REGISTERED CIVIL ENGINEER

October 19, 2012
PLANS APPROVAL DATE

REGISTERED PROFESSIONAL ENGINEER
Raymond Don Tsztoo
No. C37332
Exp. 6-30-14
CIVIL
STATE OF CALIFORNIA

THE STATE OF CALIFORNIA OR ITS OFFICERS OR AGENTS SHALL NOT BE RESPONSIBLE FOR THE ACCURACY OR COMPLETENESS OF SCANNED COPIES OF THIS PLAN SHEET.

TO ACCOMPANY PLANS DATED 12-10-12

2010 REVISED STANDARD PLAN RSP A86D

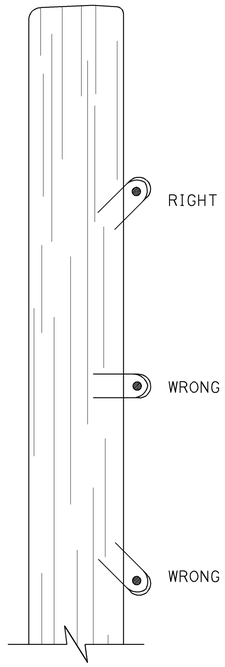

DRIVE STAPLES AT ANGLE

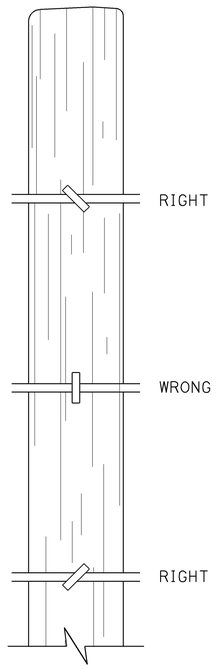

DO NOT DRIVE STAPLES PARALLEL TO SIDE OF POST

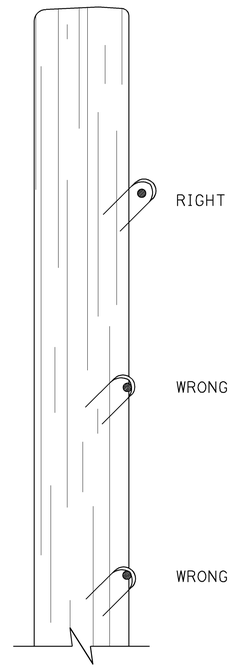

LEAVE WIRE LOOSE IN STAPLE

LINE POST STAPLING DETAILS

(Apply to rectangular/square and round posts)
Do not staple vertical wire in wire mesh.

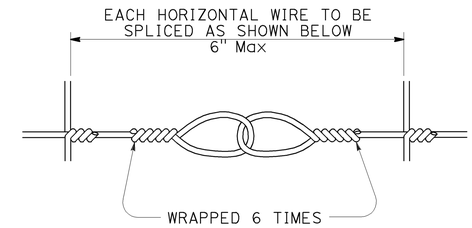

SPLICE DETAIL FOR BARBED WIRE/WIRE MESH FENCE

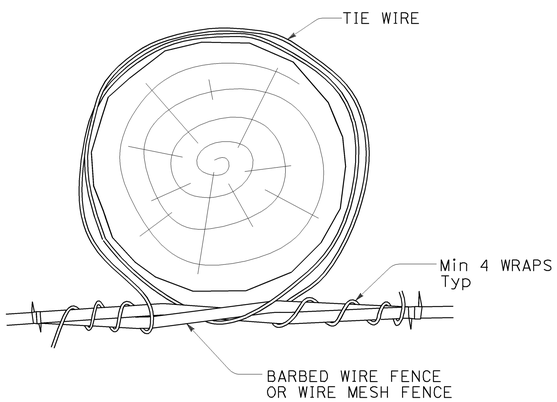

OPTION A

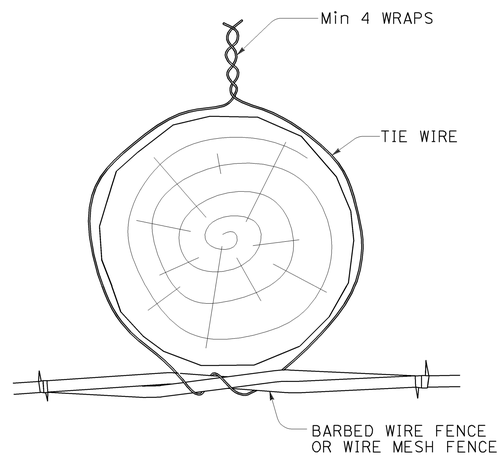

OPTION B

LINE POST WIRE TIE OPTION DETAILS

(Option details also apply to rectangular/square posts)

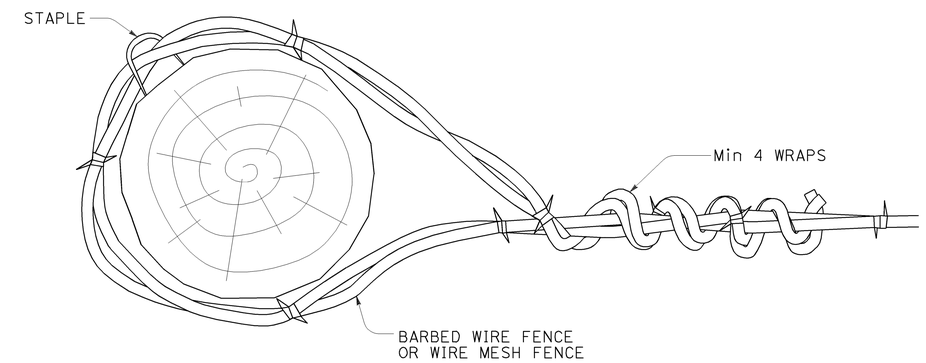

END, LATCH, PULL, AND CORNER POST DETAIL

(Also applies to rectangular/square posts)

STATE OF CALIFORNIA
DEPARTMENT OF TRANSPORTATION

BARBED WIRE AND WIRE MESH FENCE - MISCELLANEOUS DETAILS

NO SCALE

RSP A86D DATED OCTOBER 19, 2012 SUPPLEMENTS THE STANDARD PLANS BOOK DATED 2010.

REVISED STANDARD PLAN RSP A86D

10-9-12

DIST	COUNTY	ROUTE	POST MILES TOTAL PROJECT	SHEET No.	TOTAL SHEETS
03	ED	49	3.8	27	30

REGISTERED CIVIL ENGINEER

January 20, 2012
PLANS APPROVAL DATE

REGISTERED PROFESSIONAL ENGINEER
Cornelis M. Hakim
No. C55610
Exp. 12-31-12
CIVIL
STATE OF CALIFORNIA

THE STATE OF CALIFORNIA OR ITS OFFICERS OR AGENTS SHALL NOT BE RESPONSIBLE FOR THE ACCURACY OR COMPLETENESS OF SCANNED COPIES OF THIS PLAN SHEET.

TO ACCOMPANY PLANS DATED 12-10-12

2010 REVISED STANDARD PLAN RSP P74

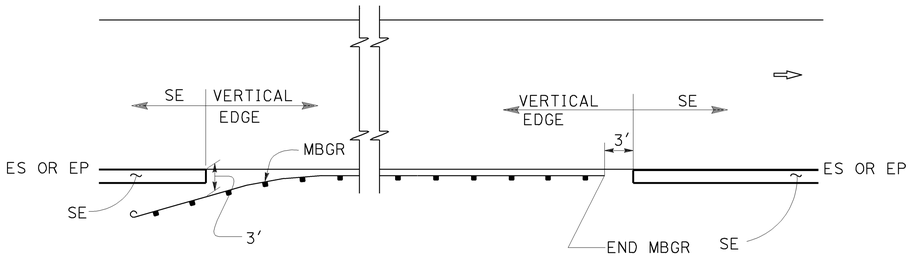

MBGR

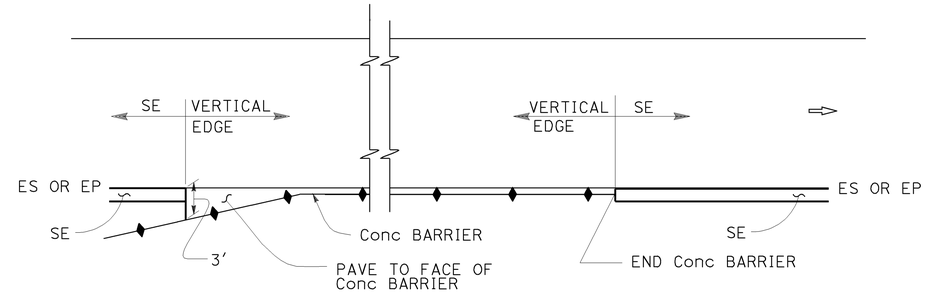

CONCRETE BARRIER

ABBREVIATIONS:

SE SAFETY EDGE

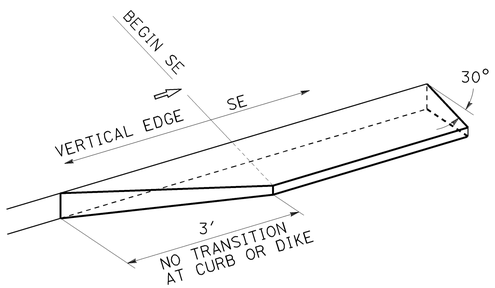

TRANSITION DETAIL FOR CONCRETE ONLY

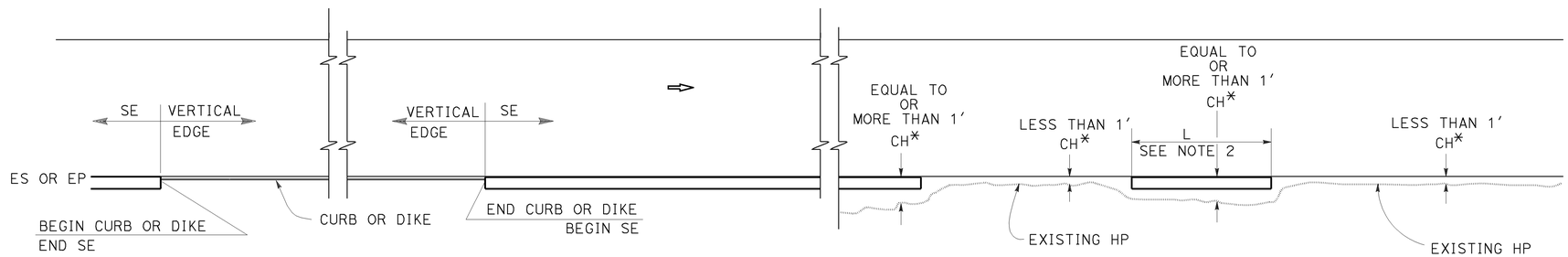

CURB OR DIKE

NARROW SIDE SLOPE

* CH = Distance from ES or EP to existing HP.

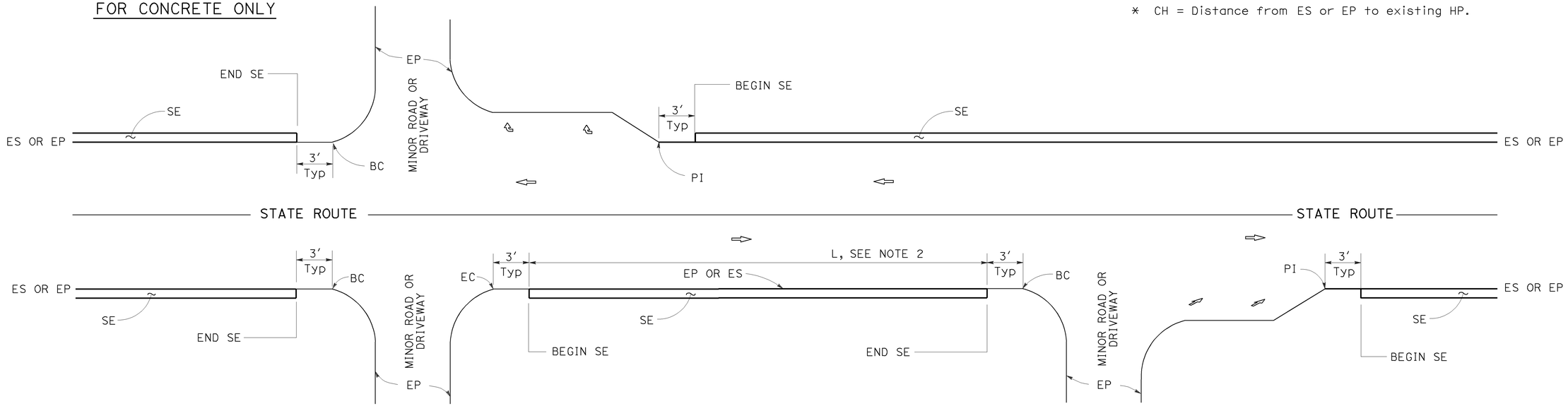

INTERSECTION

MINOR ROADWAY OR DRIVEWAY

DRIVEWAY AND INTERSECTION

NOTES:

1. For details not shown, see Revised Standard Plans RSP P75 and RSP P76.
2. Safety edge is optional when L is less than 30′.

STATE OF CALIFORNIA
DEPARTMENT OF TRANSPORTATION

PAVEMENT EDGE TREATMENTS

NO SCALE

RSP P74 DATED JANUARY 20, 2012 SUPPLEMENTS THE STANDARD PLANS BOOK DATED 2010.

REVISED STANDARD PLAN RSP P74

01-05-12

DIST	COUNTY	ROUTE	POST MILES TOTAL PROJECT	SHEET No.	TOTAL SHEETS
03	ED	49	3.8	28	30

REGISTERED CIVIL ENGINEER

January 20, 2012
PLANS APPROVAL DATE

REGISTERED PROFESSIONAL ENGINEER
Cornelis M. Hakim
No. C55610
Exp. 12-31-12
CIVIL
STATE OF CALIFORNIA

THE STATE OF CALIFORNIA OR ITS OFFICERS OR AGENTS SHALL NOT BE RESPONSIBLE FOR THE ACCURACY OR COMPLETENESS OF SCANNED COPIES OF THIS PLAN SHEET.

TO ACCOMPANY PLANS DATED 12-10-12

LEGEND:

- HMA PAVEMENT
- HMA OR CONCRETE PAVEMENT
- CONCRETE PAVEMENT

ABBREVIATIONS:

SE SAFETY EDGE
TT TOTAL THICKNESS OF SE
HW HINGE WIDTH, DISTANCE FROM ES OR EP TO HP

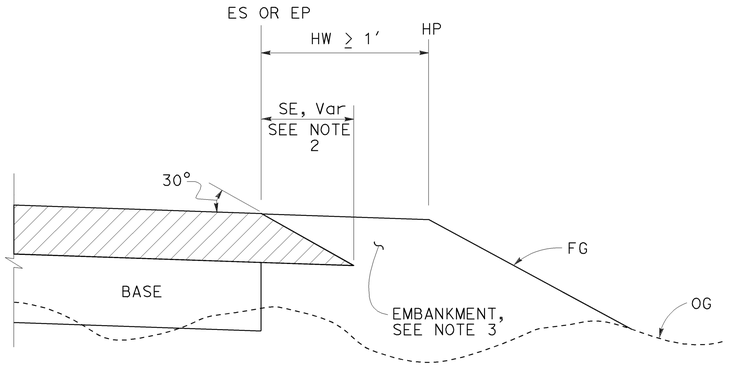

CASE K
Safety Edge - Fill Section, HW ≥ 1′

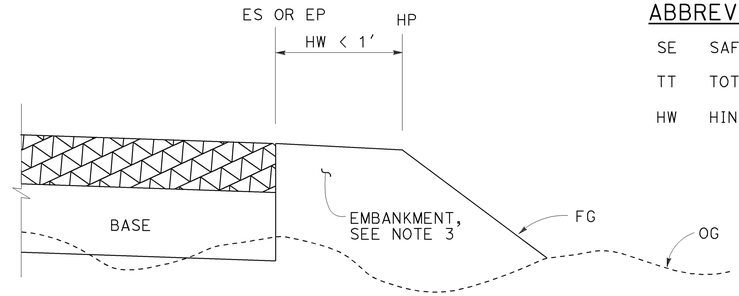

CASE L
Vertical Edge - Fill Section, HW < 1′

FILL SECTION

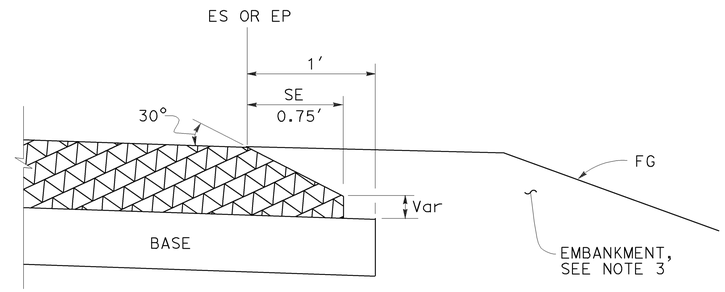

DETAIL "B"
For HMA pavement thickness more than 0.43′ or concrete pavement

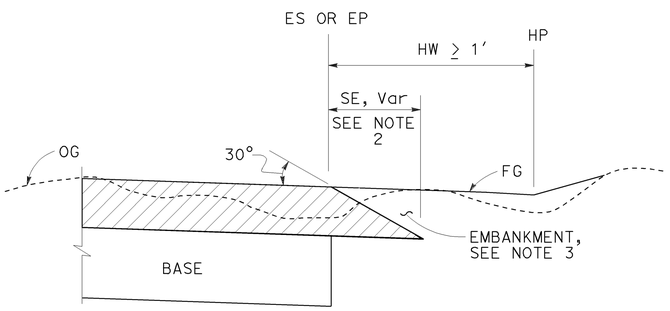

CASE M
Safety Edge - Cut Section, HW ≥ 1′

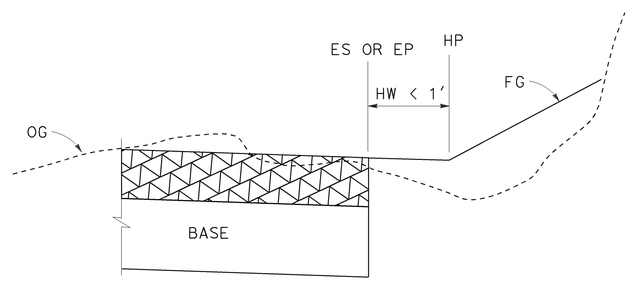

CASE N
Vertical Edge - Cut Section, HW < 1′

CUT SECTION

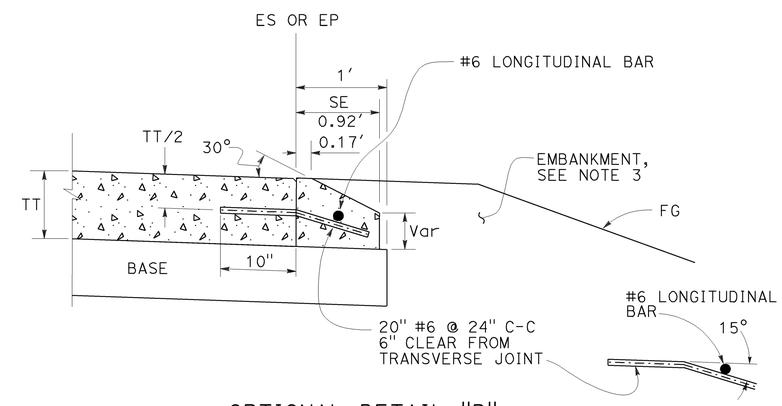

OPTIONAL DETAIL "B"
For concrete pavement
See Note 4

NOTES:

1. For limits of safety edge and vertical edge treatments, see Revised Standard Plan RSP P74
2. Details shown for HMA pavement thickness less than 0.43′. See Detail "B" for HMA pavement thickness more than 0.43′ or concrete pavement.
3. For locations and limits of embankment see project plans.
4. Safety edge transverse joint must match pavement transverse joint. End of #6 longitudinal bar must be 2" ±½" clear from transverse joint.
5. Safety edge is not needed in the area of MBGR, barrier, right turn lane and acceleration lane. See Revised Standard Plan RSP P74.

STATE OF CALIFORNIA
DEPARTMENT OF TRANSPORTATION

PAVEMENT EDGE TREATMENTS-NEW CONSTRUCTION

NO SCALE

RSP P76 DATED JANUARY 20, 2012 SUPPLEMENTS THE STANDARD PLANS BOOK DATED 2010.

REVISED STANDARD PLAN RSP P76

2010 REVISED STANDARD PLAN RSP P76

TO ACCOMPANY PLANS DATED 12-10-12

Dist	COUNTY	ROUTE	POST MILES TOTAL PROJECT	SHEET No.	TOTAL SHEETS
03	ED	49	3.8	29	30

REGISTERED CIVIL ENGINEER

October 19, 2012
PLANS APPROVAL DATE

REGISTERED PROFESSIONAL ENGINEER Glenn DeCou No. C34547 Exp. 9-30-13 CIVIL STATE OF CALIFORNIA

THE STATE OF CALIFORNIA OR ITS OFFICERS OR AGENTS SHALL NOT BE RESPONSIBLE FOR THE ACCURACY OR COMPLETENESS OF SCANNED COPIES OF THIS PLAN SHEET.

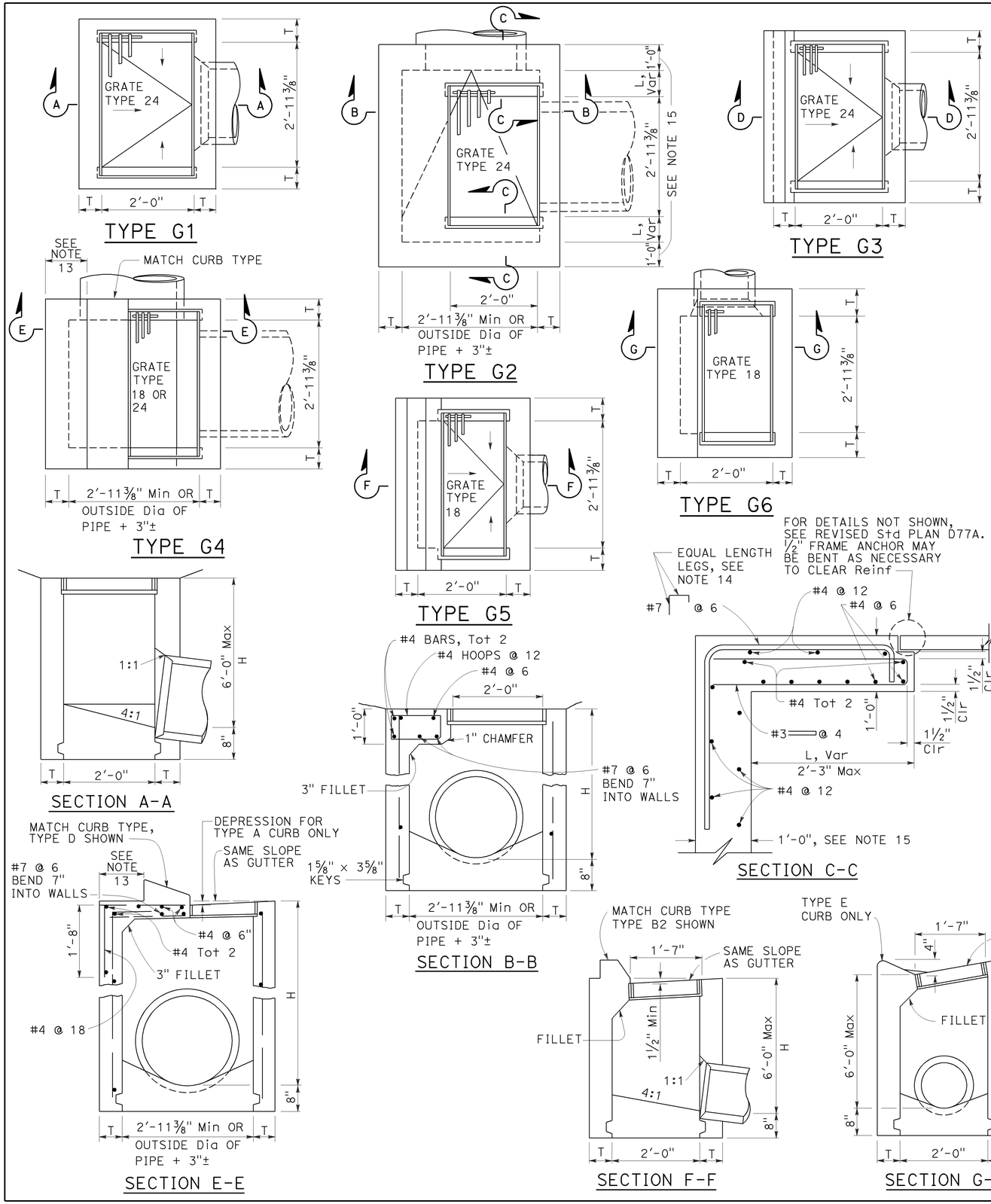

NOTES:

1. "H" is the difference in elevation between the outlet pipe flow line and the normal gutter grade line undepressed.
2. For "T" wall thickness, see Table A below.
3. Wall reinforcing not required when "H" is 8'-0" or less and the unsupported width or length is 7'-0" or less. Walls exceeding these limits shall be reinforced with #4 bars @ 1'-6" ± centers placed 1½" clear to inside of box unless otherwise shown.
4. Inlet bottom reinforcing not required. See Standard Plan D74C for alternative reinforced bottom and alternative half round bottom.
5. Steps-None required where "H" is less than 2'-6". Where "H" is 2'-6" or more, install steps with lowest rung 1'-0" above the floor and highest rung not more than 6" below top of inlet. The distance between steps shall not exceed 1'-0" and shall be uniform throughout the length of the wall. Place steps in the wall without an opening. Steps inserts may be substituted for the bar steps. Step inserts shall comply with State Industrial Safety requirements. See Standard Plan D74C for step details.
6. Details shown apply to both metal and concrete pipe.
7. Pipe(s) can be placed in any wall.
8. Curb section shall match adjacent curb.
9. Basin floors shall have wood trowel finish and a minimum slope of 12:3 from all directions toward outlet pipe.
10. Set inlet so that grate bars are parallel to direction of principal surface flow.
11. See Revised Standard Plans D77A and D77B for grate and frame details and weights of miscellaneous iron and steel.
12. See Standard Plan D78A for gutter depression details.
13. This dimenison will vary with different grates, curbs types, box width and wall thickness.
14. Bar may be rotated as necessary to clear opening. Where "L" is 6" or less, bar may be omitted.
15. Where "L" is 6" or less, wall thickness shall be as shown in Table A.
16. Cast-in-place inlets to be formed around all pipes/stubs intersecting the inlet, and concrete poured in one continuous operation. Precast inlets shall have mortared connections conforming to details for Type GCP Inlet shown on Standard Plan D75B. See Standard Specifications for mortar composition.

TABLE A

CONCRETE QUANTITIES				
TYPE	H=3'-0" TO 8'-0" (T=6")		H=8'-1" TO 20'-0" (T=8")	
	H=3'-0" (CY)	ADDITIONAL PCC PER FOOT (CY)	H=8'-1" (CY)	ADDITIONAL PCC PER FOOT (CY)
G-1	0.95	0.220	See Note A	SEE NOTE A
G-2*	1.31	0.255	3.50	0.357
G-3	1.03	0.220	See Note A	SEE NOTE A
G-4* (TYPE 24)	1.27	0.255	3.48	0.357
G-4* (TYPE 18)	1.30	0.255	3.50	0.357
G-5	1.02	0.220	SEE NOTE A	SEE NOTE A
G-6	1.04	0.220	SEE NOTE A	SEE NOTE A

TABLE BASED ON 8" FLOOR SLAB. NO DEDUCTIONS ARE TO BE MADE TO THESE QUANTITIES BECAUSE OF PIPE OPENINGS, DIFFERENT FLOOR ALTERNATIVES OR DIFFERENT CURB TYPES. * QUANTITIES FOR TYPE G-2 AND G-4 INLETS BASED ON THE MINIMUM INTERIOR DIMENSIONS.

NOTE A:

Maximum allowable height 6'-0".

STATE OF CALIFORNIA
DEPARTMENT OF TRANSPORTATION

DRAINAGE INLETS

NO SCALE

RSP D73 DATED OCTOBER 19, 2012 SUPERSEDES STANDARD PLAN D73 DATED MAY 20, 2011 - PAGE 156 OF THE STANDARD PLANS BOOK DATED 2010.

REVISED STANDARD PLAN RSP D73

2010 REVISED STANDARD PLAN RSP D73

7-19-12

Dist	COUNTY	ROUTE	POST MILES TOTAL PROJECT	SHEET No.	TOTAL SHEETS
03	ED	49	3.8	30	30

REGISTERED CIVIL ENGINEER

July 20, 2012
PLANS APPROVAL DATE

Raymond Don Tsztoo
No. C37332
Exp. 6-30-14
CIVIL
STATE OF CALIFORNIA
REGISTERED PROFESSIONAL ENGINEER

THE STATE OF CALIFORNIA OR ITS OFFICERS OR AGENTS SHALL NOT BE RESPONSIBLE FOR THE ACCURACY OR COMPLETENESS OF SCANNED COPIES OF THIS PLAN SHEET.

TO ACCOMPANY PLANS DATED 12-10-12

2010 REVISED STANDARD PLAN RSP D77B

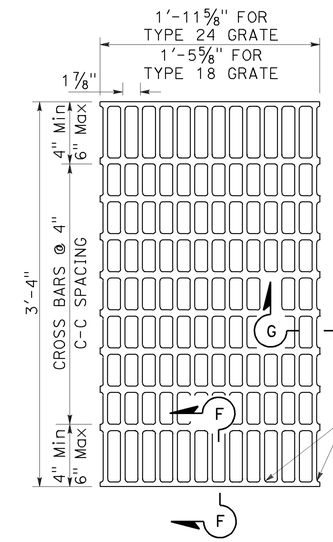

NOTES:

Bearing bars to be 3½" × ¼" bars on 1⅞" centers.

⅜"± ø Cross bars may be fillet welded, resistance welded or electroforged to bearing bars.

Weight of Type 24 grate = 141 LBS.

Weight of Type 18 grate = 107 LBS. (Type 24 grate shown).

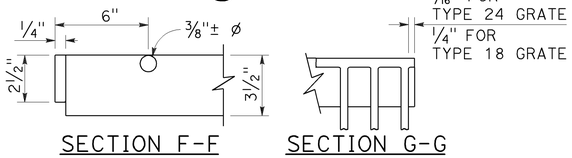

SECTION F-F SECTION G-G

TYPE 18-10 AND 24-13 GRATE

(Welded Steel)

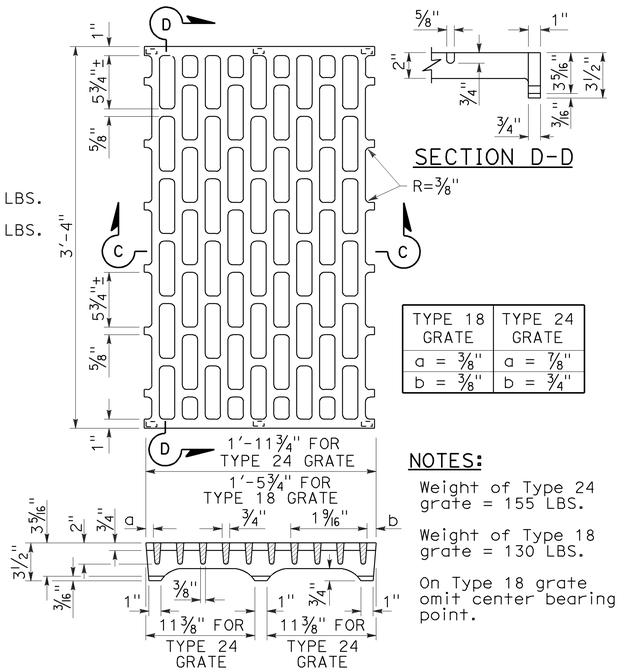

TYPE 18 GRATE	TYPE 24 GRATE
a = ⅜"	a = ⅞"
b = ⅜"	b = ¾"

NOTES:

Weight of Type 24 grate = 155 LBS.

Weight of Type 18 grate = 130 LBS.

On Type 18 grate omit center bearing point.

SECTION D-D

SECTION C-C

TYPE 18-8C AND 24-10C GRATE

(Cast ductile iron)

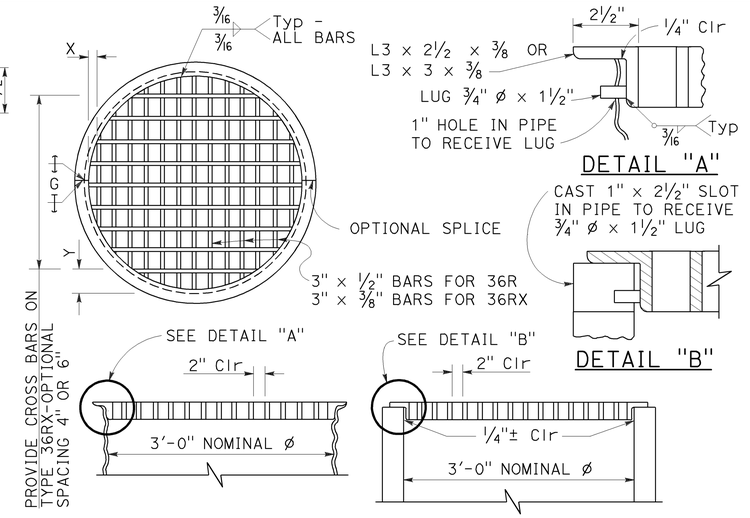

DETAIL "A"

DETAIL "B"

TYPE 36R AND 36RX GRATE DETAILS

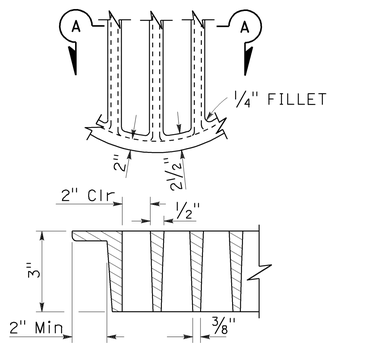

SECTION A-A

ALTERNATIVE CAST DUCTILE IRON GRATE OR CAST CARBON STEEL GRATE TYPE 36R AND 36RX

BASIS FOR Misc IRON AND STEEL FINAL PAY WEIGHTS FOR DRAINAGE INLETS

INLET TYPE	GRATE TYPE	No. OF GRATES	WEIGHT LB
GDO (SEE NOTE 4)	24-10C	2	391
	24-10S	2	456
	24-12X	2	473
	24-13	2	374
GO,GOL,G1,G2, G3,G4 (TYPE 24)	24-10C	1	202
	24-10S	1	229
	24-12X	1	239
	24-13	1	188
G4 (TYPE 18) G5,G6	18-8S	1	187
	18-9X	1	187
	18-10	1	149
GT1,GT2	18-8S	2	374
	18-9X	2	374
	18-10	2	298
GT3,GT4	24-10C	2	404
	24-10S	2	458
	24-12X	2	478
	24-13	2	376
ODI	36RX (Mod)	1	196
GMP,GCP,GCPI	36RX	1	215
ODI	36R (Mod)	1	220
GMP,GCP,GCPI	36R	1	236
TRASH RACK			22
GRATE CHAIN			3

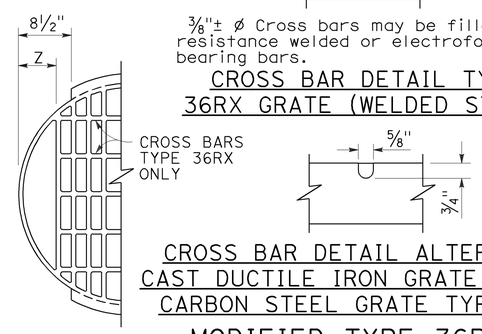

⅜"± ø Cross bars may be fillet welded, resistance welded or electroforged to bearing bars.

CROSS BAR DETAIL TYPE 36RX GRATE (WELDED STEEL)

CROSS BAR DETAIL ALTERNATIVE CAST DUCTILE IRON GRATE OR CAST CARBON STEEL GRATE TYPE 36RX

MODIFIED TYPE 36R AND 36RX GRATE FOR ODI INLET

NOTES:

1. When alternative grates are allowed - Final pay based on alternative with the lesser weight.
2. Use frame shown on Standard Plan D74A, D74B or RSP D77A as appropriate.
3. When Type 24-10S, 24-12X or 24-13 grates are used with GDO Inlets, a ¼" × 3½" × 3'-4⅞" steel bar shall be welded across the center of inlet frame to separate the individual grates.
4. See Revised Standard Plan RSP D77A for connecting chain to welded grate and frame. When chain is required, do not use cast ductile iron grate.

GRATE BAR SPACING TABLE

TYPE	No. OF BARS	CLEAR BAR SPACING	X	Y 4" SPACING	Y 6" SPACING	Z
36R	13	2"	2⅛"	-	-	-
36RX (STEEL)	15	2"	9/16"	3¾"	5¾"	-
36RX (CAST)	13	2"	2⅛"	3¾"	5¾"	-
36R Mod	12	2"	2⅛"	-	-	5"
36RX Mod (STEEL)	13	2"	9/16"	3¾"	5¾"	5 11/16"
36RX Mod (CAST)	12	2"	2⅛"	3¾"	5¾"	5"

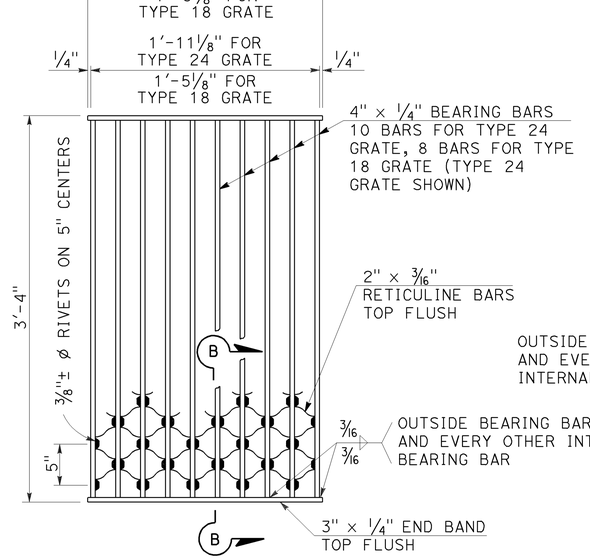

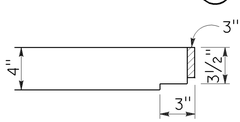

NOTES:

Weight of Type 24 grate = 182 LBS.
Weight of Type 18 grate = 145 LBS.

SECTION B-B

TYPE 18-8S AND 24-10S GRATE

(Welded Steel) Reticuline type

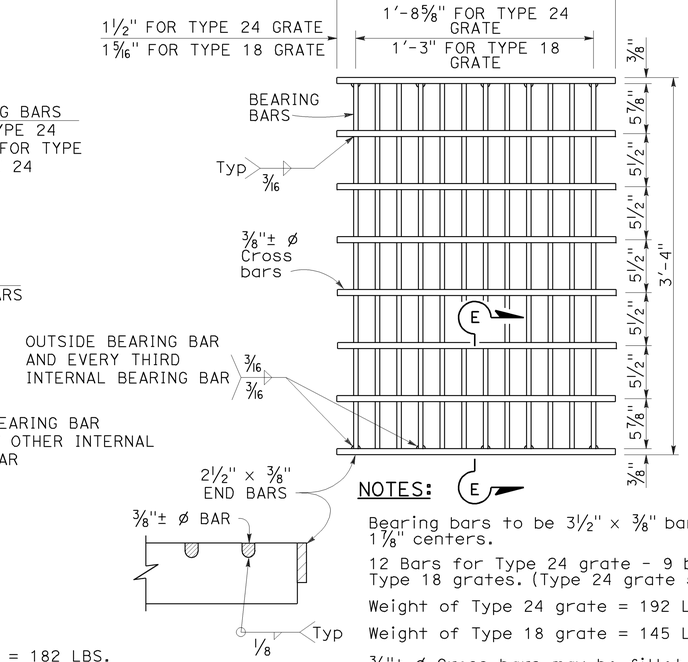

NOTES:

Bearing bars to be 3½" × ⅜" bars on 1⅞" centers.

12 Bars for Type 24 grate - 9 bars for Type 18 grates. (Type 24 grate shown).

Weight of Type 24 grate = 192 LBS.

Weight of Type 18 grate = 145 LBS.

⅜"± ø Cross bars may be fillet welded, resistance welded or electroforged to bearing bars.

SECTION E-E

TYPE 18-9X AND 24-12X GRATE

(Welded Steel)

STATE OF CALIFORNIA
DEPARTMENT OF TRANSPORTATION

BICYCLE TRAVERSABLE GRATE DETAILS

NO SCALE

RSP D77B DATED JULY 20, 2012 SUPERSEDES STANDARD PLAN D77B DATED MAY 20, 2011 - PAGE 165 OF THE STANDARD PLANS BOOK DATED 2010.

REVISED STANDARD PLAN RSP D77B

4-17-12