Dist	COUNTY	ROUTE	POST MILES TOTAL PROJECT	SHEET No.	TOTAL SHEETS
03	ED	50	51.6/53.2	1	25

INDEX OF PLANS

SHEET No.	DESCRIPTION
1	TITLE AND LOCATION MAP
2	EROSION CONTROL DETAIL
3-20	DRAINAGE PROFILES, DETAILS AND QUANTITIES
21-23	TRAFFIC CONTROL SYSTEMS
24-25	REVISED STANDARD PLANS

THE STANDARD PLANS LIST APPLICABLE TO THIS CONTRACT IS INCLUDED IN THE NOTICE TO BIDDERS AND SPECIAL PROVISIONS BOOK.

STATE OF CALIFORNIA

DEPARTMENT OF TRANSPORTATION

PROJECT PLANS FOR CONSTRUCTION ON

STATE HIGHWAY

IN EL DORADO COUNTY

NEAR KYBURZ AT VARIOUS LOCATIONS

FROM 0.3 MILE WEST OF 36 MILE STONE ROAD

TO 0.6 MILE WEST OF WRIGHTS LAKE ROAD

TO BE SUPPLEMENTED BY STANDARD PLANS DATED 2010

LOCATION MAP

LOCATIONS OF CONSTRUCTION

LOCATION	COUNTY	ROUTE	POST MILE
1	ED	50	51.63
2	ED	50	51.82
3	ED	50	51.91
4	ED	50	51.95
5	ED	50	52.00
6	ED	50	52.20
7	ED	50	52.24
8	ED	50	52.33
9	ED	50	R52.55
10	ED	50	R52.61
11	ED	50	52.76
12	ED	50	52.87
13	ED	50	52.92
14	ED	50	52.96
15	ED	50	53.00
16	ED	50	53.09
17	ED	50	53.12
18	ED	50	53.19
19	ED	50	53.24

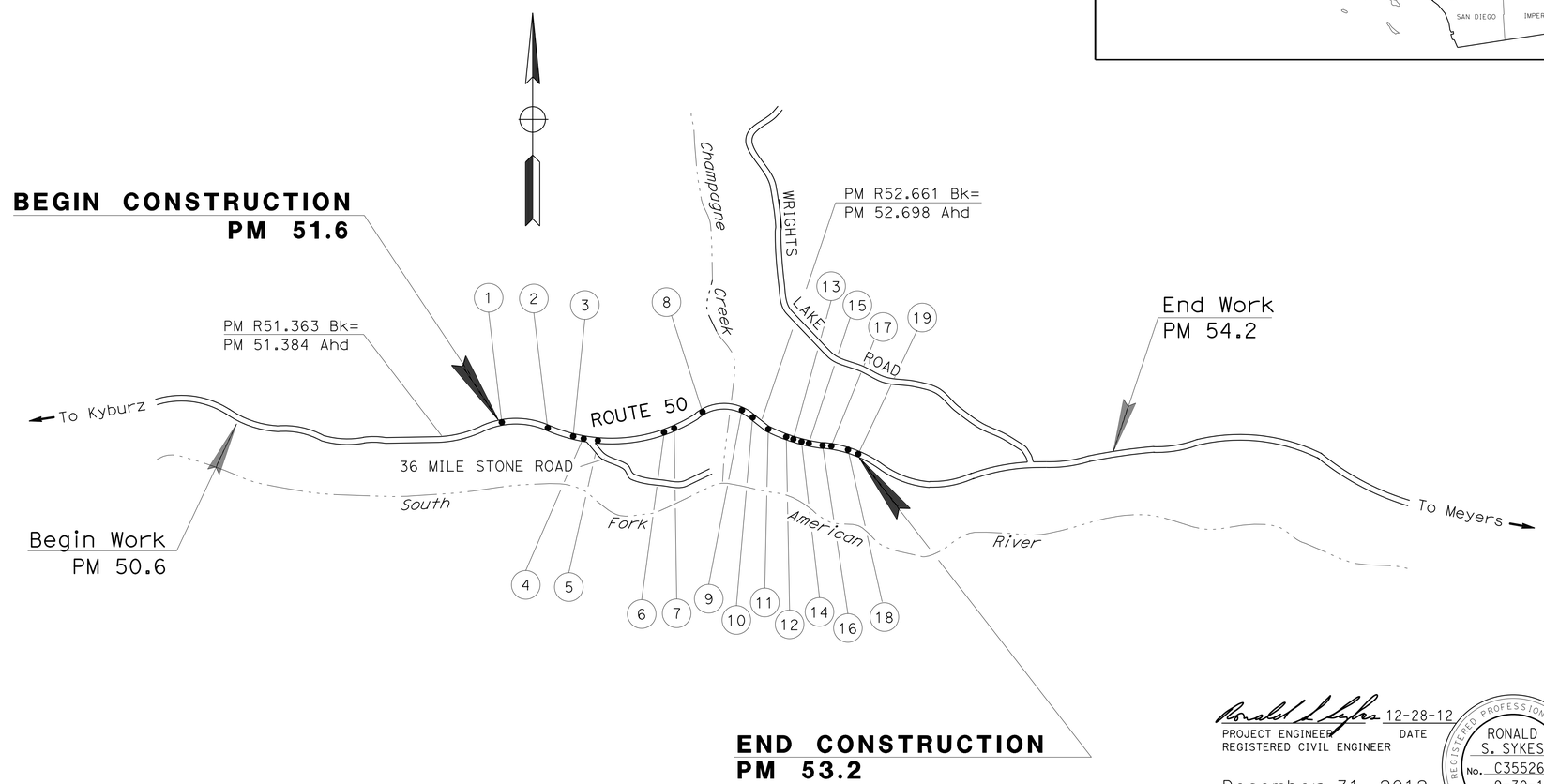

NO SCALE

PROJECT MANAGER RONALD S. SYKES

DESIGN ENGINEER RONALD S. SYKES

THE CONTRACTOR SHALL POSSESS THE CLASS (OR CLASSES) OF LICENSE AS SPECIFIED IN THE "NOTICE TO BIDDERS."

12-28-12
PROJECT ENGINEER DATE
REGISTERED CIVIL ENGINEER

December 31, 2012
PLANS APPROVAL DATE

REGISTERED PROFESSIONAL ENGINEER
RONALD S. SYKES
No. C35526
Exp. 9-30-13
CIVIL
STATE OF CALIFORNIA

THE STATE OF CALIFORNIA OR ITS OFFICERS OR AGENTS SHALL NOT BE RESPONSIBLE FOR THE ACCURACY OR COMPLETENESS OF SCANNED COPIES OF THIS PLAN SHEET.

CONTRACT No.	03-4M0804
PROJECT ID	0300020069

LAST REVISION 00-00-00

DATE PLOTTED => 03-JAN-2013
TIME PLOTTED => 16:43

Dist	COUNTY	ROUTE	POST MILES TOTAL PROJECT	SHEET No.	TOTAL SHEETS
03	ED	50	51.6/53.2	2	25

LICENSED LANDSCAPE ARCHITECT

12-31-12
PLANS APPROVAL DATE

LICENSED LANDSCAPE ARCHITECT JAMES G. WILLIAMSON No. 5415 Signature 02-28-14 Renewal Date 12-31-12 Date STATE OF CALIFORNIA

THE STATE OF CALIFORNIA OR ITS OFFICERS OR AGENTS SHALL NOT BE RESPONSIBLE FOR THE ACCURACY OR COMPLETENESS OF SCANNED COPIES OF THIS PLAN SHEET.

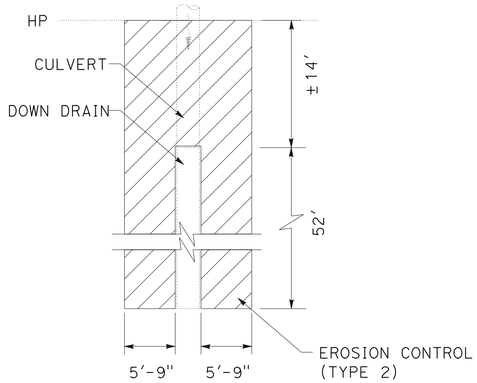

PLAN

EROSION CONTROL DETAIL A

DRAINAGE SYSTEM No. 2

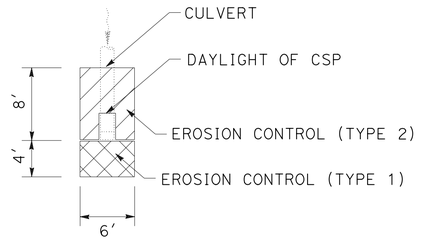

PLAN

EROSION CONTROL DETAIL B

DRAINAGE SYSTEM No. 6

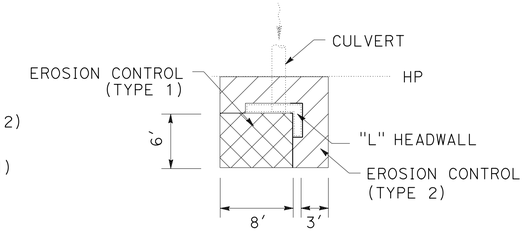

PLAN

EROSION CONTROL DETAIL C

DRAINAGE SYSTEM No. 7

NOTES:

1. FOR CLARITY, PERSPECTIVE VIEW DOES NOT SHOW ALL STAPLES.
2. STEEL STAPLES TO BE PLACED 0'-6" ON CENTER ALONG THE LENGTH OF THE KEY TRENCH.
3. KEY TRENCH SHALL BE PLACED AT THE UPSTREAM END OF THE RECP (NETTING) ONLY.

LEGEND:

RECP = ROLLED EROSION CONTROL PRODUCT

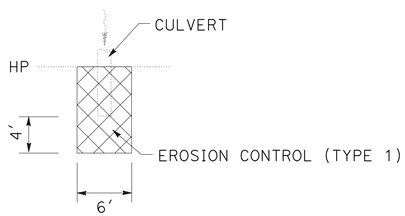

PLAN

EROSION CONTROL DETAIL D

DRAINAGE SYSTEM No. 12

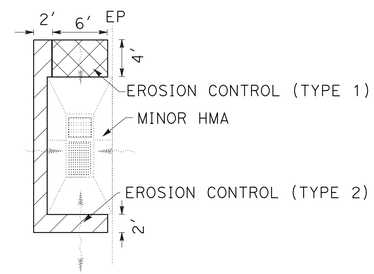

PLAN

EROSION CONTROL DETAIL F

DRAINAGE SYSTEM No. 6 13 15 19

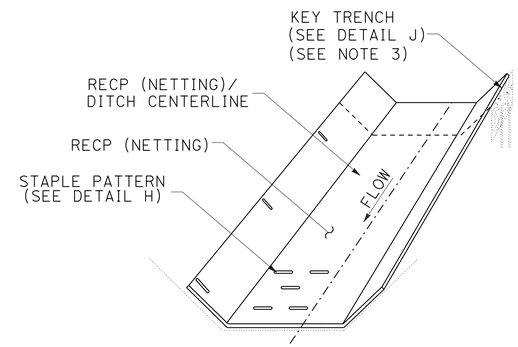

PERSPECTIVE

RECP (NETTING) DETAIL G

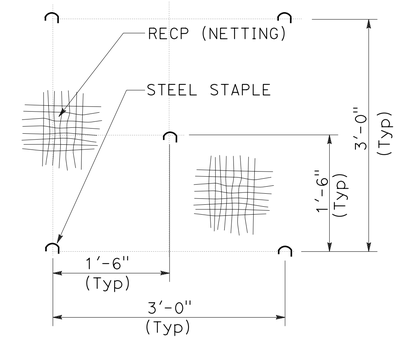

PLAN

STAPLE PATTERN DETAIL I

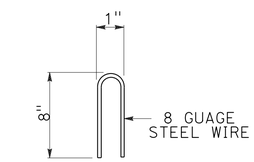

STAPLE DETAIL H

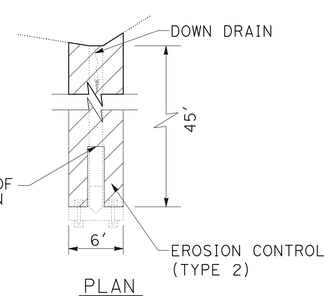

PLAN

EROSION CONTROL DETAIL E

DRAINAGE SYSTEM No. 13

EROSION CONTROL TYPE 1

SEQUENCE	ITEM	MATERIAL		APPLICATION RATE
		DESCRIPTION	TYPE	
STEP 1	MULCH	PINE NEEDLE	---	2" DEPTH
STEP 2	ROLLED EROSION CONTROL PRODUCT (NETTING)	NETTING	TYPE A	---

EROSION CONTROL TYPE 2

SEQUENCE	ITEM	MATERIAL		APPLICATION RATE
		DESCRIPTION	TYPE	
STEP 1	MULCH	PINE NEEDLE	---	2" DEPTH

EROSION CONTROL QUANTITIES

DRAINAGE SYSTEM	POST MILE	LOCATION	DETAIL	MULCH	ROLLED EROSION CONTROL PRODUCT (NETTING)
				CY	SQFT
2	51.82	DOWN DRAIN	A	4.7	--
6	52.20	INLET	F	.42	24
6	52.20	OUTLET	B	.35	24
7	52.24	INLET	C	.65	48
12	52.87	OUTLET	D	.33	--
13	52.92	INLET	F	.42	24
13	52.92	DOWN DRAIN	E	1.5	--
15	53.00	INLET	F	.42	24
19	53.24	INLET	F	.42	24
		TOTAL		9.2	168

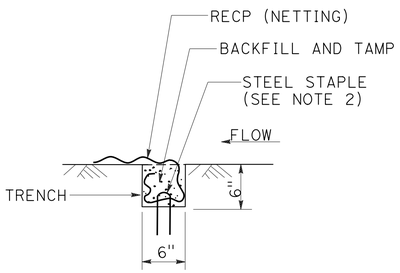

SECTION

KEY TRENCH DETAIL J

EROSION CONTROL DETAILS

NO SCALE

APPROVED FOR EROSION CONTROL WORK ONLY

ECD-1

STATE OF CALIFORNIA - DEPARTMENT OF TRANSPORTATION
Caltrans® LANDSCAPE ARCHITECTURE
SENIOR LANDSCAPE ARCHITECT T. CHRIS JOHNSON
CALCULATED-DESIGNED BY J. WILLIAMSON
CHECKED BY J. KURTH
REVISED BY
DATE REVISED

LAST REVISION 08-23-12
DATE PLOTTED => 03-JAN-2013
TIME PLOTTED => 16:43

Dist	COUNTY	ROUTE	POST MILES TOTAL PROJECT	SHEET No.	TOTAL SHEETS
03	ED	50	51.6/53.2	3	25

REGISTERED CIVIL ENGINEER 12-28-12 DATE

12-31-12
PLANS APPROVAL DATE

REGISTERED PROFESSIONAL ENGINEER RONALD S. SYKES No. C35526 Exp. 9-30-13 CIVIL STATE OF CALIFORNIA

THE STATE OF CALIFORNIA OR ITS OFFICERS OR AGENTS SHALL NOT BE RESPONSIBLE FOR THE ACCURACY OR COMPLETENESS OF SCANNED COPIES OF THIS PLAN SHEET.

NOTE:
FOR ACCURATE RIGHT OF WAY DATA, CONTACT RIGHT OF WAY ENGINEERING AT THE DISTRICT OFFICE.

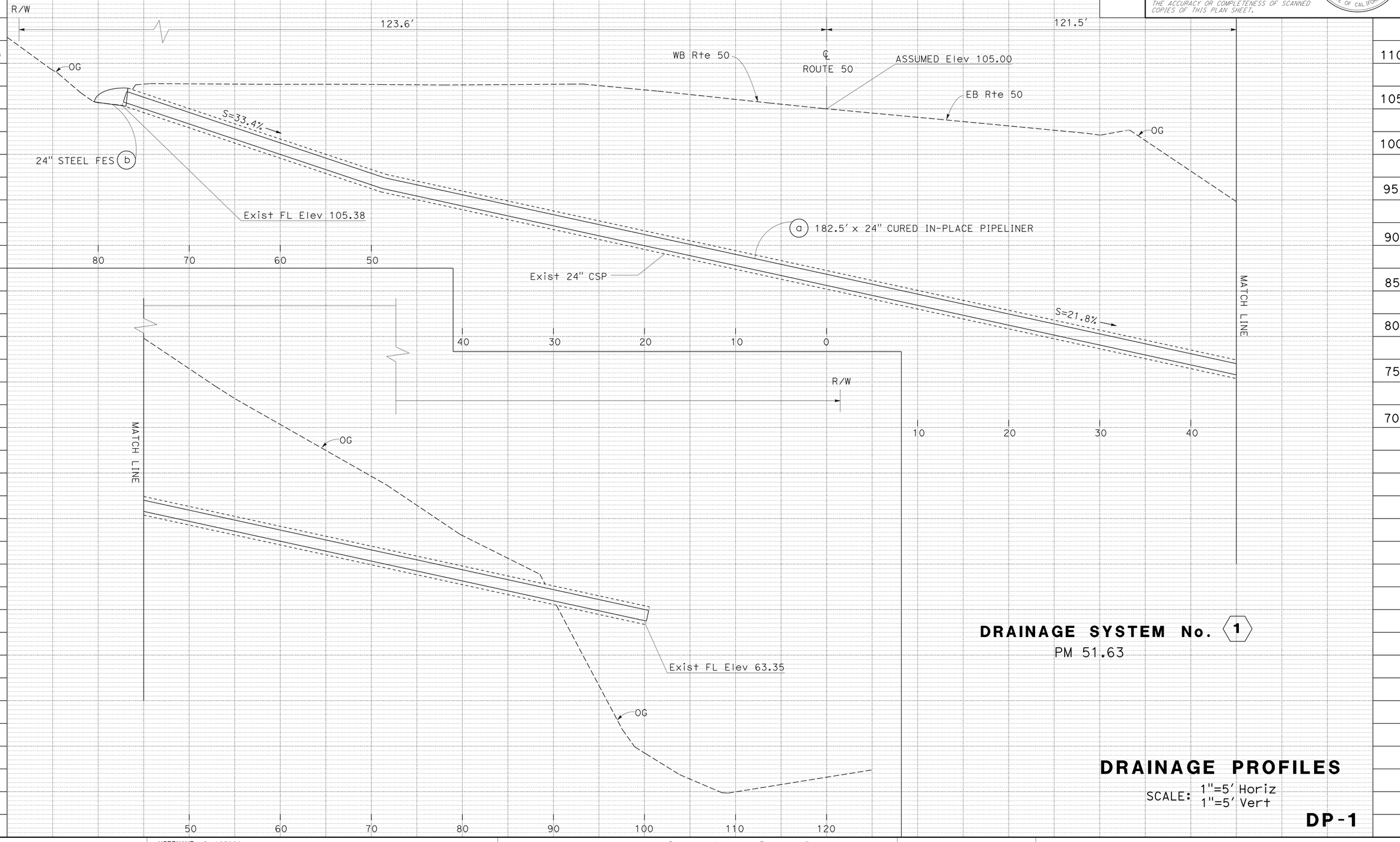

DRAINAGE SYSTEM No. 1
PM 51.63

DRAINAGE PROFILES

SCALE: 1"=5' Horiz
1"=5' Vert

DP-1

REVISED BY | DATE REVISED
NIK BEACH | RONALD S. SYKES
CALCULATED-DESIGNED BY | CHECKED BY
FUNCTIONAL SUPERVISOR | RONALD S. SYKES
STATE OF CALIFORNIA - DEPARTMENT OF TRANSPORTATION
Caltrans MAINTENANCE DESIGN

LAST REVISION 00-00-00 | DATE PLOTTED => 03-JAN-2013 | TIME PLOTTED => 16:43

Dist	COUNTY	ROUTE	POST MILES TOTAL PROJECT	SHEET No.	TOTAL SHEETS
03	ED	50	51.6/53.2	4	25

REGISTERED CIVIL ENGINEER 12-28-12 DATE

12-31-12
PLANS APPROVAL DATE

REGISTERED PROFESSIONAL ENGINEER RONALD S. SYKES No. C35526 Exp. 9-30-13 CIVIL STATE OF CALIFORNIA

THE STATE OF CALIFORNIA OR ITS OFFICERS OR AGENTS SHALL NOT BE RESPONSIBLE FOR THE ACCURACY OR COMPLETENESS OF SCANNED COPIES OF THIS PLAN SHEET.

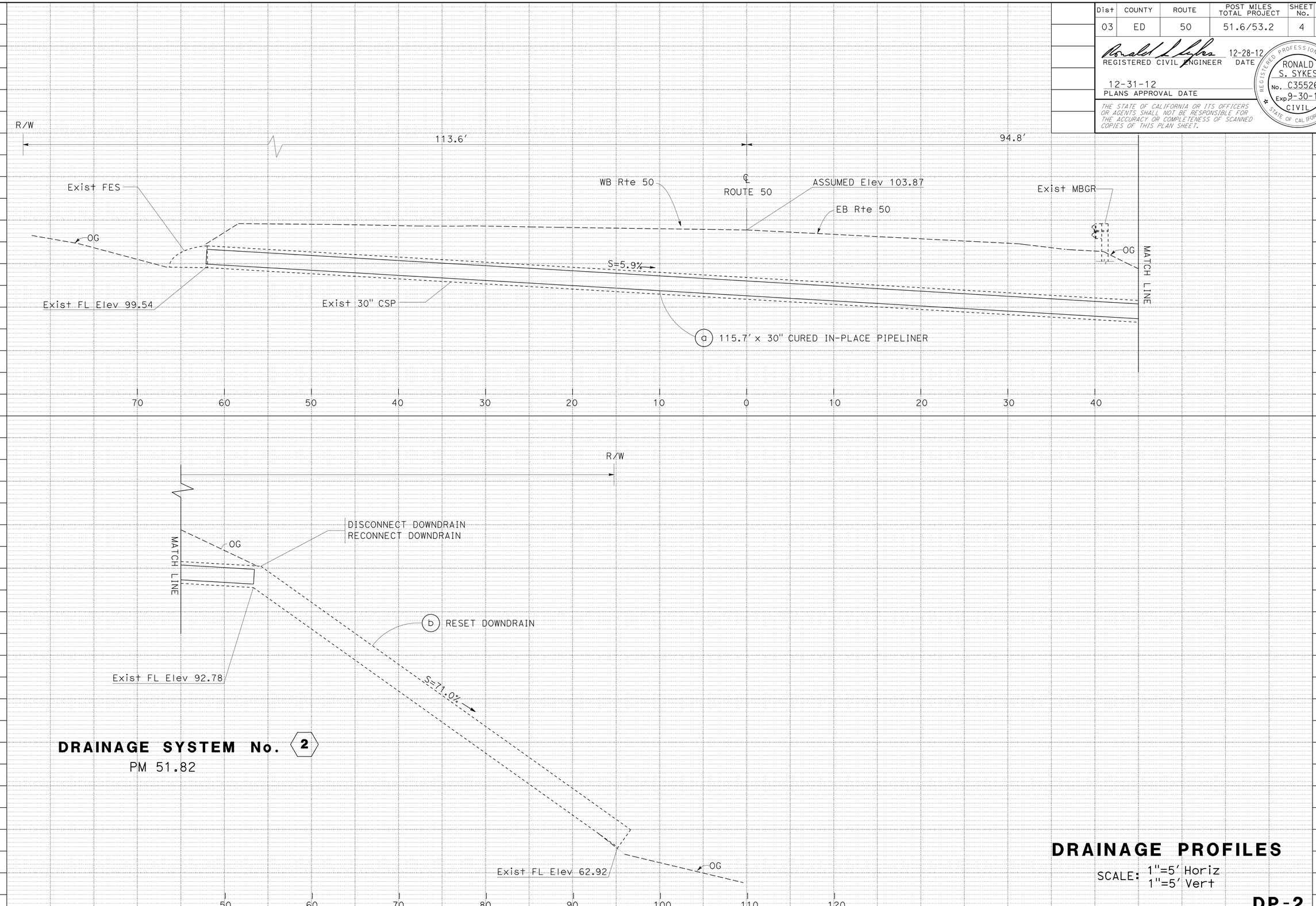

DRAINAGE SYSTEM No. 2
PM 51.82

DRAINAGE PROFILES
SCALE: 1"=5′ Horiz
1"=5′ Vert

DP-2

STATE OF CALIFORNIA - DEPARTMENT OF TRANSPORTATION
Caltrans® MAINTENANCE DESIGN
FUNCTIONAL SUPERVISOR RONALD S. SYKES
CALCULATED-DESIGNED BY NIK BEACH
CHECKED BY RONALD S. SYKES
REVISED BY
DATE REVISED

LAST REVISION 00-00-00
DATE PLOTTED => 03-JAN-2013
TIME PLOTTED => 16:43

Dist	COUNTY	ROUTE	POST MILES TOTAL PROJECT	SHEET No.	TOTAL SHEETS
03	ED	50	51.6/53.2	5	25

REGISTERED CIVIL ENGINEER 12-28-12 DATE

12-31-12
PLANS APPROVAL DATE

REGISTERED PROFESSIONAL ENGINEER RONALD S. SYKES No. C35526 Exp. 9-30-13 CIVIL STATE OF CALIFORNIA

THE STATE OF CALIFORNIA OR ITS OFFICERS OR AGENTS SHALL NOT BE RESPONSIBLE FOR THE ACCURACY OR COMPLETENESS OF SCANNED COPIES OF THIS PLAN SHEET.

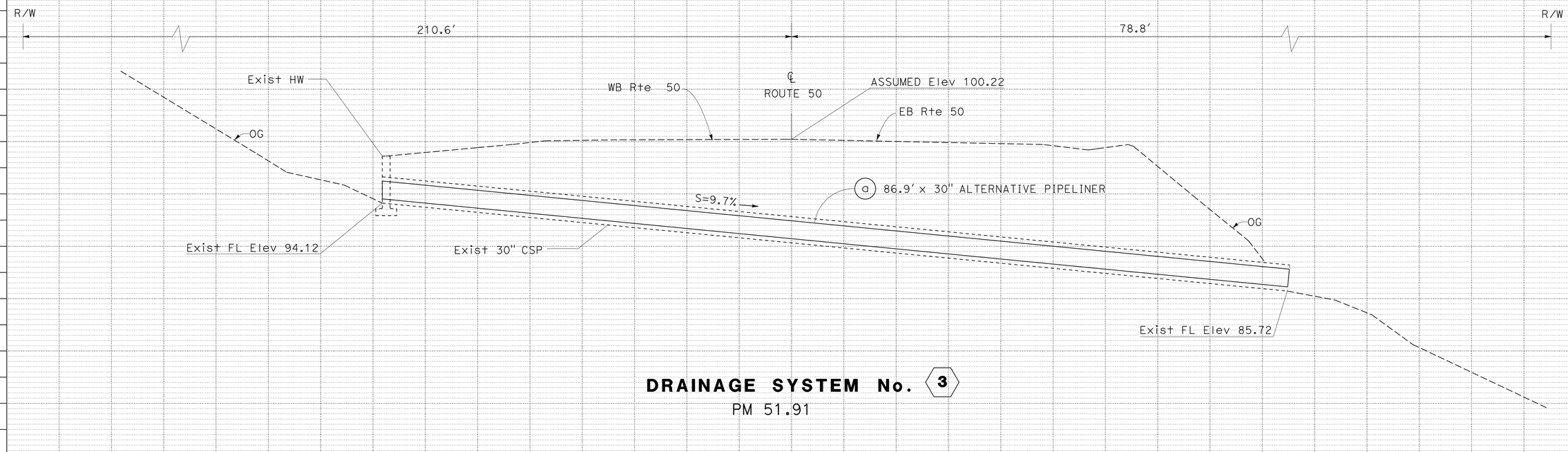

DRAINAGE SYSTEM No. 3

PM 51.91

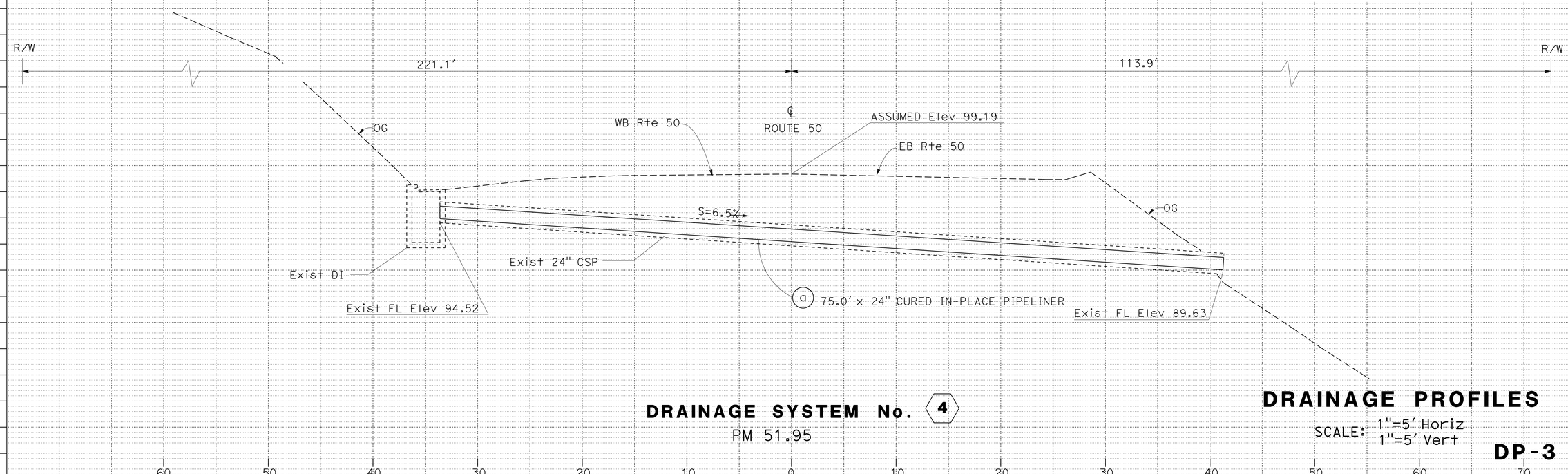

DRAINAGE SYSTEM No. 4

PM 51.95

DRAINAGE PROFILES

SCALE: 1"=5' Horiz
1"=5' Vert

DP-3

REVISED BY | DATE REVISED
NIK BEACH | RONALD S. SYKES
CALCULATED-DESIGNED BY | CHECKED BY
FUNCTIONAL SUPERVISOR | RONALD S. SYKES

STATE OF CALIFORNIA - DEPARTMENT OF TRANSPORTATION
Caltrans® MAINTENANCE DESIGN

LAST REVISION 10-13-11 | DATE PLOTTED => 03-JAN-2013 | TIME PLOTTED => 16:43

Dist	COUNTY	ROUTE	POST MILES TOTAL PROJECT	SHEET No.	TOTAL SHEETS
03	ED	50	51.6/53.2	6	25

REGISTERED CIVIL ENGINEER 12-28-12 DATE

12-31-12
PLANS APPROVAL DATE

REGISTERED PROFESSIONAL ENGINEER RONALD S. SYKES No. C35526 Exp. 9-30-13 CIVIL STATE OF CALIFORNIA

THE STATE OF CALIFORNIA OR ITS OFFICERS OR AGENTS SHALL NOT BE RESPONSIBLE FOR THE ACCURACY OR COMPLETENESS OF SCANNED COPIES OF THIS PLAN SHEET.

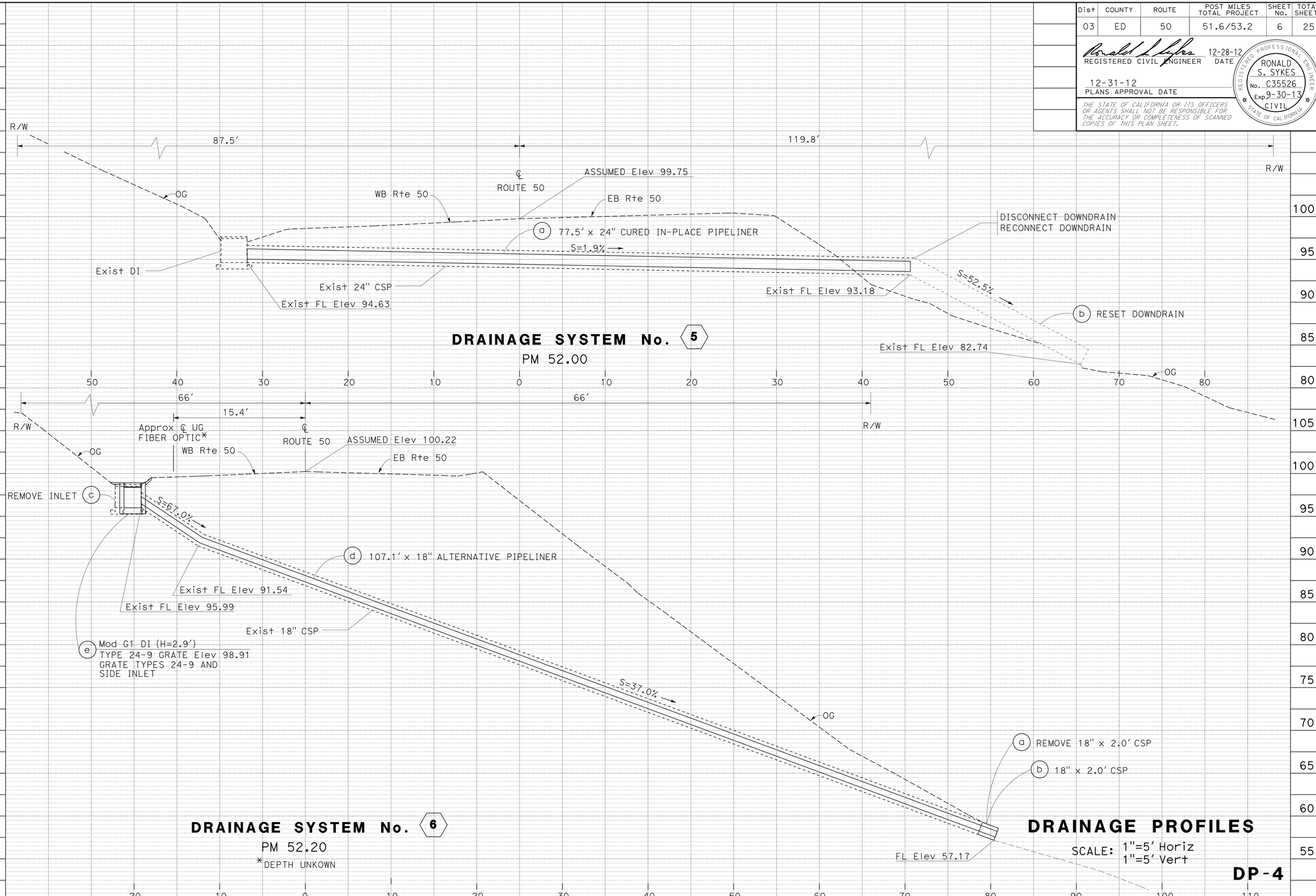

DRAINAGE PROFILES

SCALE: 1"=5' Horiz
1"=5' Vert

DP-4

STATE OF CALIFORNIA - DEPARTMENT OF TRANSPORTATION
Caltrans® MAINTENANCE DESIGN

FUNCTIONAL SUPERVISOR: RONALD S. SYKES
CALCULATED-DESIGNED BY: NIK BEACH
CHECKED BY: RONALD S. SYKES
REVISED BY
DATE REVISED

LAST REVISION 00-00-00
DATE PLOTTED => 03-JAN-2013
TIME PLOTTED => 16:43

Dist	COUNTY	ROUTE	POST MILES TOTAL PROJECT	SHEET No.	TOTAL SHEETS
03	ED	50	51.6/53.2	7	25

REGISTERED CIVIL ENGINEER 12-28-12 DATE

12-31-12
PLANS APPROVAL DATE

REGISTERED PROFESSIONAL ENGINEER RONALD S. SYKES No. C35526 Exp. 9-30-13 CIVIL STATE OF CALIFORNIA

THE STATE OF CALIFORNIA OR ITS OFFICERS OR AGENTS SHALL NOT BE RESPONSIBLE FOR THE ACCURACY OR COMPLETENESS OF SCANNED COPIES OF THIS PLAN SHEET.

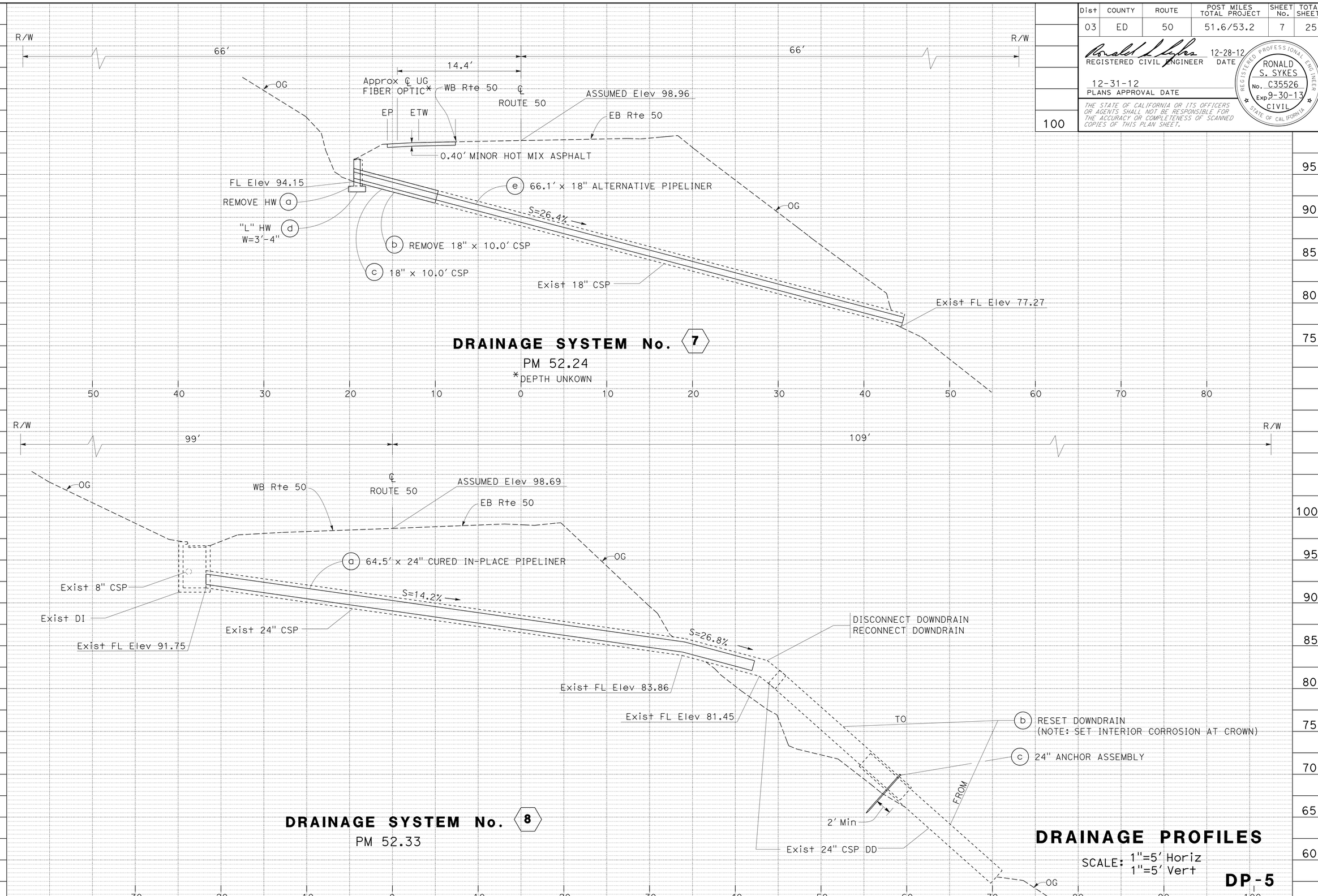

REVISED BY | DATE REVISED

NIK BEACH | RONALD S. SYKES

CALCULATED-DESIGNED BY | CHECKED BY

FUNCTIONAL SUPERVISOR | RONALD S. SYKES

STATE OF CALIFORNIA - DEPARTMENT OF TRANSPORTATION
Caltrans MAINTENANCE DESIGN

LAST REVISION 00-00-00 | DATE PLOTTED => 03-JAN-2013 TIME PLOTTED => 16:43

Dist	COUNTY	ROUTE	POST MILES TOTAL PROJECT	SHEET No.	TOTAL SHEETS
03	ED	50	51.6/53.2	8	25

REGISTERED CIVIL ENGINEER 12-28-12 DATE

12-31-12
PLANS APPROVAL DATE

REGISTERED PROFESSIONAL ENGINEER RONALD S. SYKES No. C35526 Exp. 9-30-13 CIVIL STATE OF CALIFORNIA

THE STATE OF CALIFORNIA OR ITS OFFICERS OR AGENTS SHALL NOT BE RESPONSIBLE FOR THE ACCURACY OR COMPLETENESS OF SCANNED COPIES OF THIS PLAN SHEET.

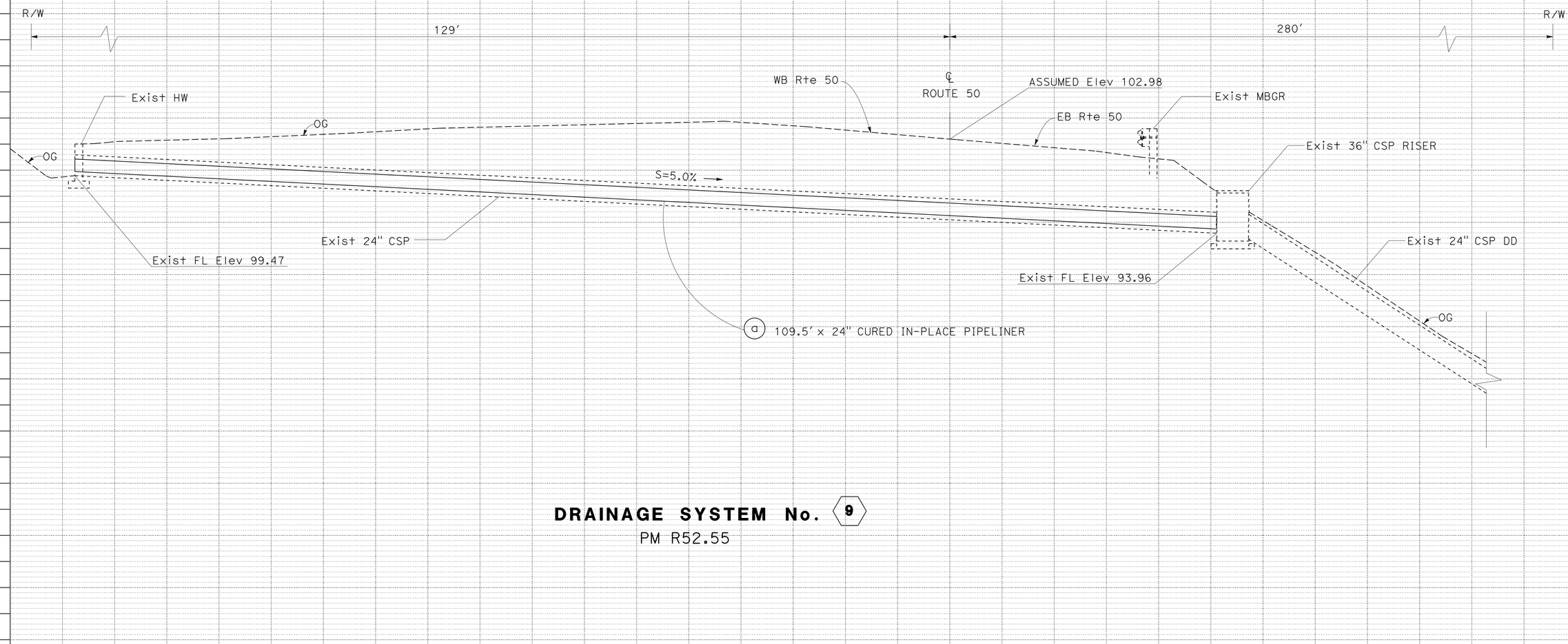

DRAINAGE SYSTEM No. 9

PM R52.55

DRAINAGE PROFILES

SCALE: 1"=5′ Horiz
1"=5′ Vert

DP-6

80 70 60 50 40 30 20 10 0 10 20 30 40 50

NIK BEACH — REVISED BY
RONALD S. SYKES — DATE REVISED
CALCULATED-DESIGNED BY
CHECKED BY
FUNCTIONAL SUPERVISOR
RONALD S. SYKES

STATE OF CALIFORNIA - DEPARTMENT OF TRANSPORTATION
Caltrans® MAINTENANCE DESIGN

LAST REVISION 00-00-00 DATE PLOTTED => 03-JAN-2013 TIME PLOTTED => 16:43

BORDER LAST REVISED 7/2/2010
USERNAME => s125660
DGN FILE => 03000200691ib006.dgn
RELATIVE BORDER SCALE IS IN INCHES 0 1 2 3
UNIT 0484
PROJECT NUMBER & PHASE 03000200691

Dist	COUNTY	ROUTE	POST MILES TOTAL PROJECT	SHEET No.	TOTAL SHEETS
03	ED	50	51.6/53.2	9	25

REGISTERED CIVIL ENGINEER 12-28-12 DATE

12-31-12
PLANS APPROVAL DATE

REGISTERED PROFESSIONAL ENGINEER RONALD S. SYKES No. C35526 Exp. 9-30-13 CIVIL STATE OF CALIFORNIA

THE STATE OF CALIFORNIA OR ITS OFFICERS OR AGENTS SHALL NOT BE RESPONSIBLE FOR THE ACCURACY OR COMPLETENESS OF SCANNED COPIES OF THIS PLAN SHEET.

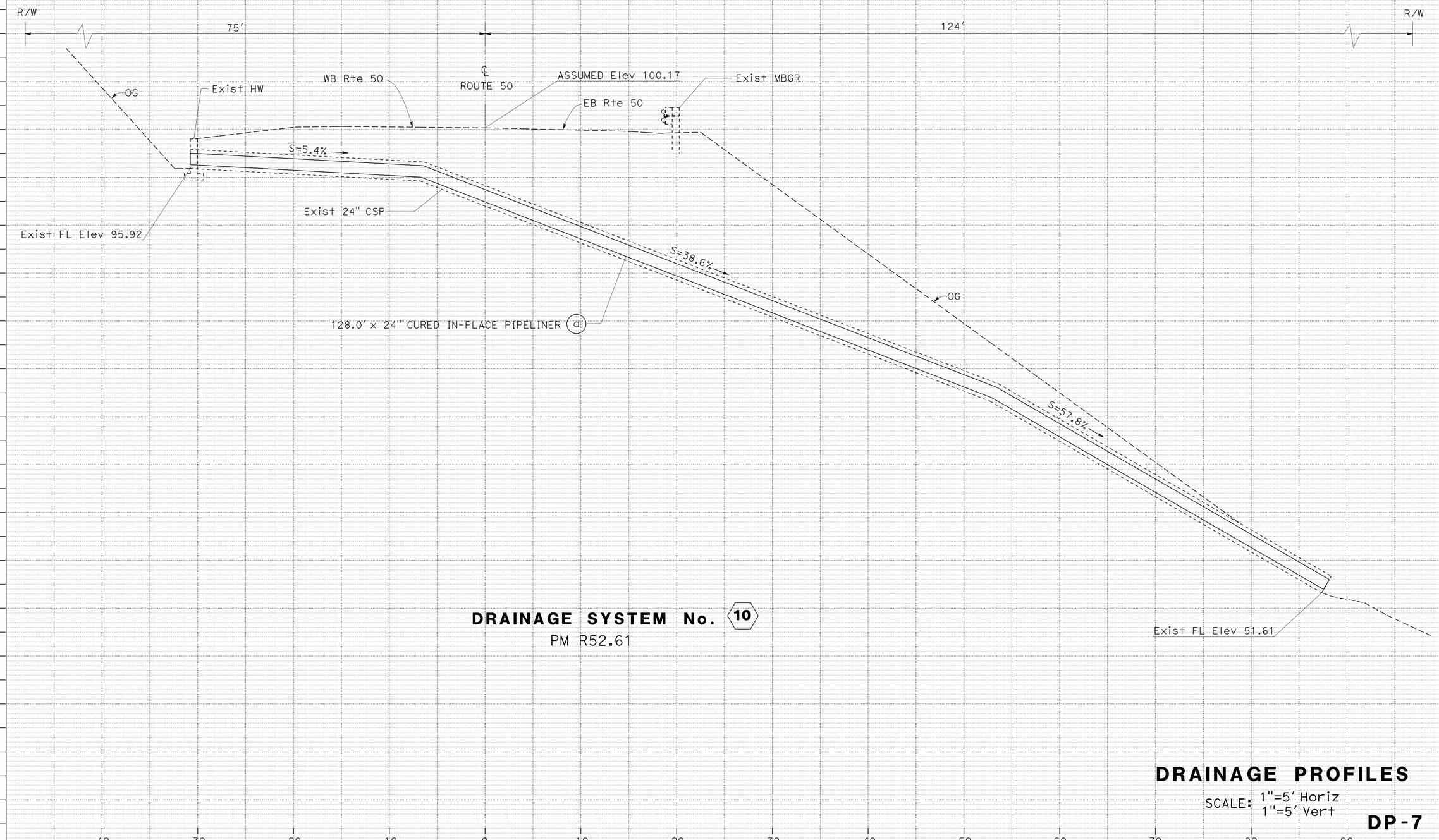

DRAINAGE SYSTEM No. 10
PM R52.61

DRAINAGE PROFILES

SCALE: 1"=5' Horiz
1"=5' Vert

DP-7

STATE OF CALIFORNIA - DEPARTMENT OF TRANSPORTATION
Caltrans® **MAINTENANCE DESIGN**

FUNCTIONAL SUPERVISOR: RONALD S. SYKES
CALCULATED-DESIGNED BY: NIK BEACH
CHECKED BY: RONALD S. SYKES
REVISED BY
DATE REVISED

LAST REVISION 00-00-00
DATE PLOTTED => 03-JAN-2013
TIME PLOTTED => 16:43

Dist	COUNTY	ROUTE	POST MILES TOTAL PROJECT	SHEET No.	TOTAL SHEETS
03	ED	50	51.6/53.2	10	25

REGISTERED CIVIL ENGINEER 12-28-12 DATE

12-31-12
PLANS APPROVAL DATE

REGISTERED PROFESSIONAL ENGINEER RONALD S. SYKES No. C35526 Exp. 9-30-13 CIVIL STATE OF CALIFORNIA

THE STATE OF CALIFORNIA OR ITS OFFICERS OR AGENTS SHALL NOT BE RESPONSIBLE FOR THE ACCURACY OR COMPLETENESS OF SCANNED COPIES OF THIS PLAN SHEET.

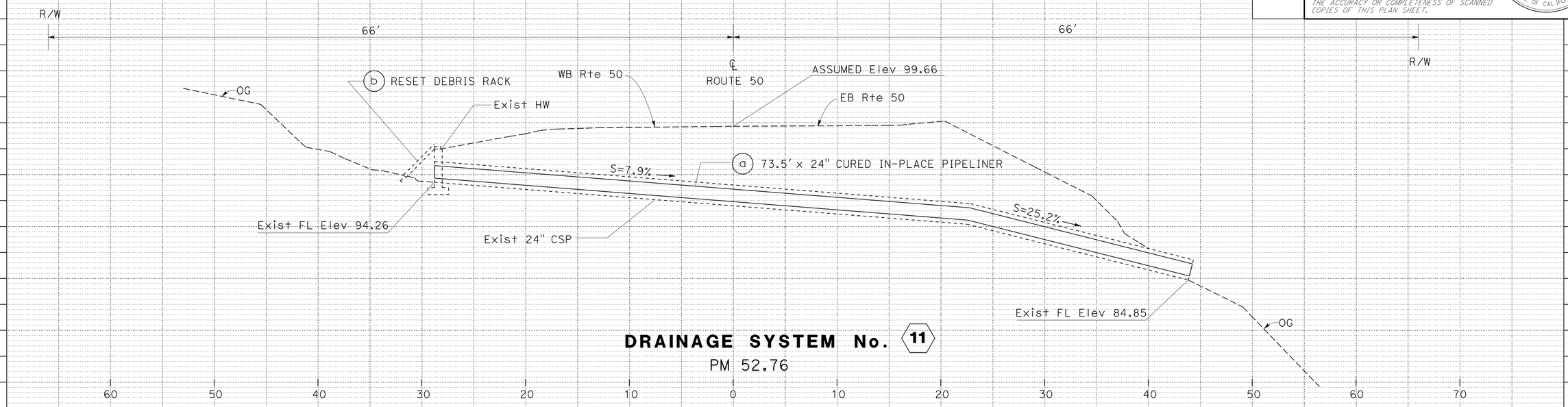

DRAINAGE SYSTEM No. 11
PM 52.76

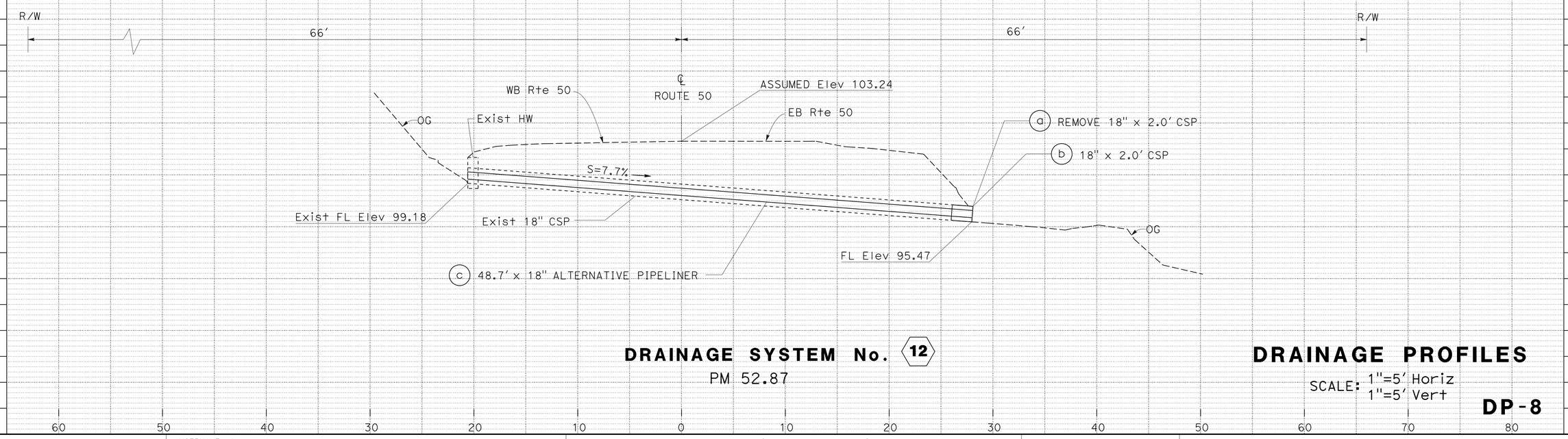

DRAINAGE SYSTEM No. 12
PM 52.87

DRAINAGE PROFILES

SCALE: 1"=5′ Horiz
1"=5′ Vert

DP-8

REVISED BY | DATE REVISED
NIK BEACH | RONALD S. SYKES
CALCULATED-DESIGNED BY | CHECKED BY
FUNCTIONAL SUPERVISOR | RONALD S. SYKES

STATE OF CALIFORNIA - DEPARTMENT OF TRANSPORTATION
Caltrans MAINTENANCE DESIGN

LAST REVISION 00-00-00 | DATE PLOTTED => 03-JAN-2013 | TIME PLOTTED => 16:43

Dist	COUNTY	ROUTE	POST MILES TOTAL PROJECT	SHEET No.	TOTAL SHEETS
03	ED	50	51.6/53.2	11	25

REGISTERED CIVIL ENGINEER 12-28-12 DATE

12-31-12
PLANS APPROVAL DATE

REGISTERED PROFESSIONAL ENGINEER RONALD S. SYKES No. C35526 Exp. 9-30-13 CIVIL STATE OF CALIFORNIA

THE STATE OF CALIFORNIA OR ITS OFFICERS OR AGENTS SHALL NOT BE RESPONSIBLE FOR THE ACCURACY OR COMPLETENESS OF SCANNED COPIES OF THIS PLAN SHEET.

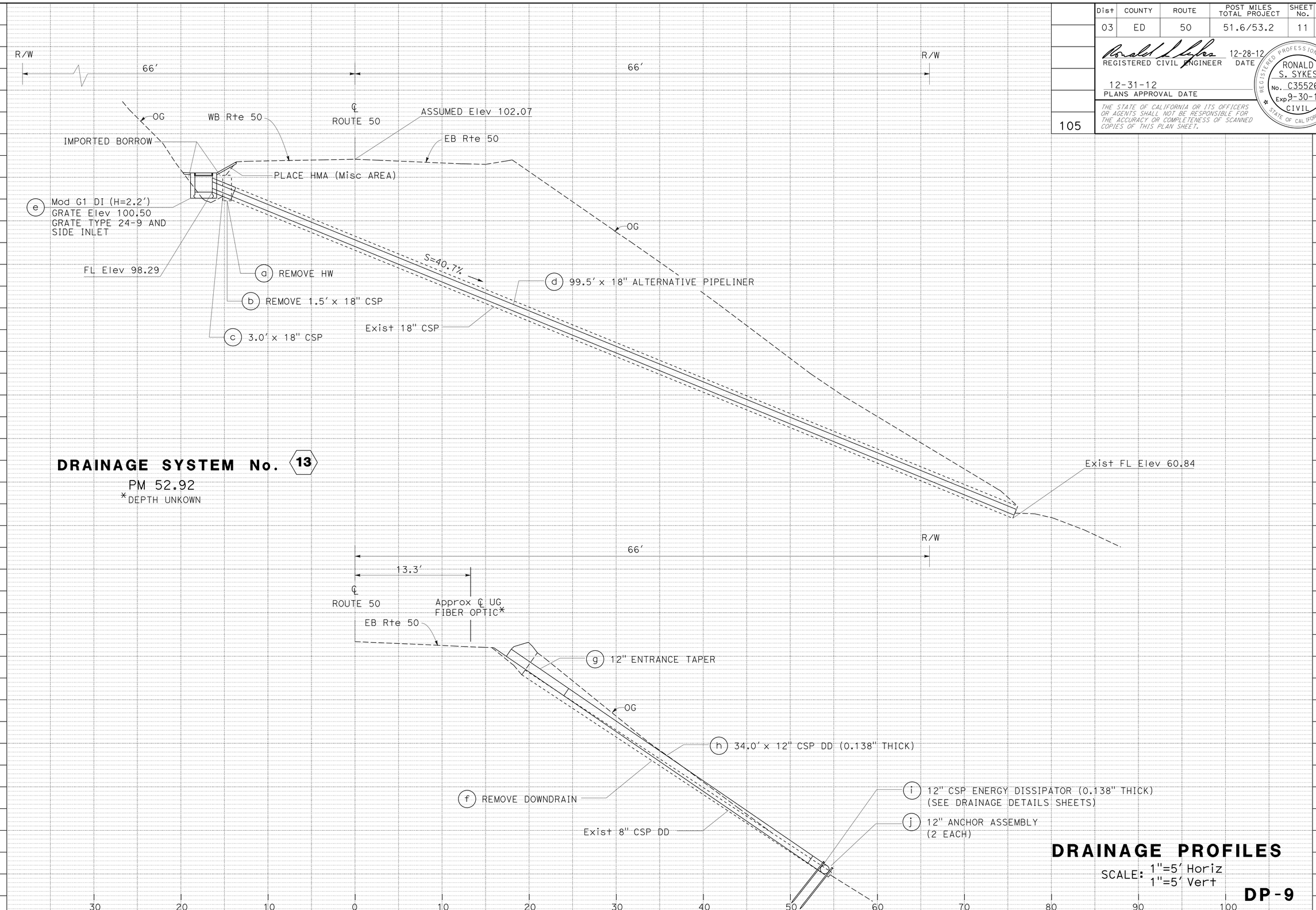

STATE OF CALIFORNIA - DEPARTMENT OF TRANSPORTATION
Caltrans MAINTENANCE DESIGN

FUNCTIONAL SUPERVISOR: RONALD S. SYKES
CALCULATED-DESIGNED BY: NIK BEACH
CHECKED BY: RONALD S. SYKES
REVISED BY
DATE REVISED

LAST REVISION 00-00-00
DATE PLOTTED => 03-JAN-2013
TIME PLOTTED => 16:43

Dist	COUNTY	ROUTE	POST MILES TOTAL PROJECT	SHEET No.	TOTAL SHEETS
03	ED	50	51.6/53.2	12	25

REGISTERED CIVIL ENGINEER 12-28-12 DATE

12-31-12
PLANS APPROVAL DATE

REGISTERED PROFESSIONAL ENGINEER RONALD S. SYKES No. C35526 Exp. 9-30-13 CIVIL STATE OF CALIFORNIA

THE STATE OF CALIFORNIA OR ITS OFFICERS OR AGENTS SHALL NOT BE RESPONSIBLE FOR THE ACCURACY OR COMPLETENESS OF SCANNED COPIES OF THIS PLAN SHEET.

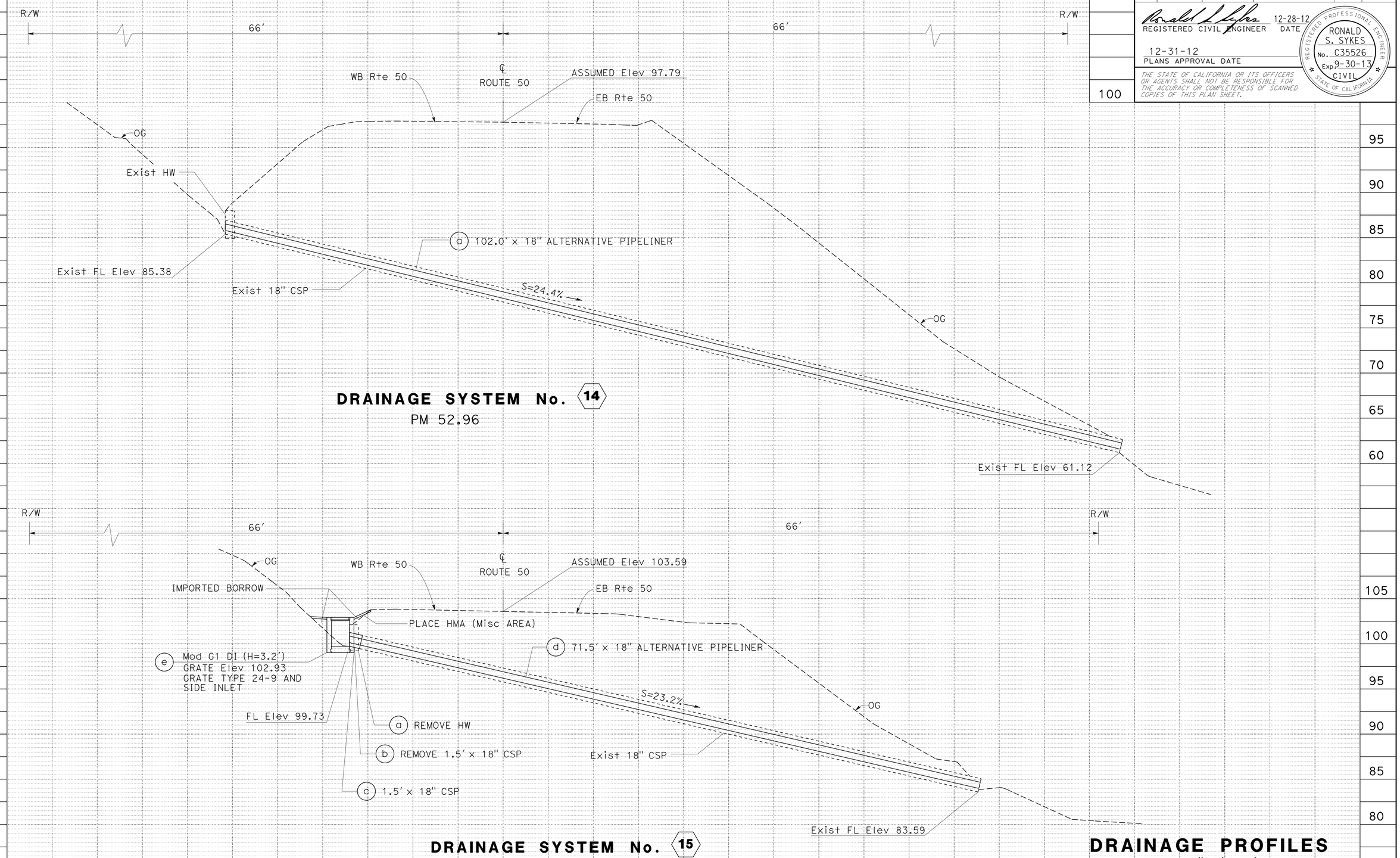

DRAINAGE SYSTEM No. 14
PM 52.96

DRAINAGE SYSTEM No. 15
PM 53.00

DRAINAGE PROFILES

SCALE: 1"=5' Horiz
1"=5' Vert

DP-10

STATE OF CALIFORNIA - DEPARTMENT OF TRANSPORTATION
Caltrans® MAINTENANCE DESIGN

FUNCTIONAL SUPERVISOR: RONALD S. SYKES
CALCULATED-DESIGNED BY: NIK BEACH
CHECKED BY: RONALD S. SYKES
REVISED BY
DATE REVISED

LAST REVISION 00-00-00 | DATE PLOTTED => 03-JAN-2013 | TIME PLOTTED => 16:43

Dist	COUNTY	ROUTE	POST MILES TOTAL PROJECT	SHEET No.	TOTAL SHEETS
03	ED	50	51.6/53.2	13	25

REGISTERED CIVIL ENGINEER 12-28-12 DATE

12-31-12
PLANS APPROVAL DATE

REGISTERED PROFESSIONAL ENGINEER RONALD S. SYKES No. C35526 Exp. 9-30-13 CIVIL STATE OF CALIFORNIA

THE STATE OF CALIFORNIA OR ITS OFFICERS OR AGENTS SHALL NOT BE RESPONSIBLE FOR THE ACCURACY OR COMPLETENESS OF SCANNED COPIES OF THIS PLAN SHEET.

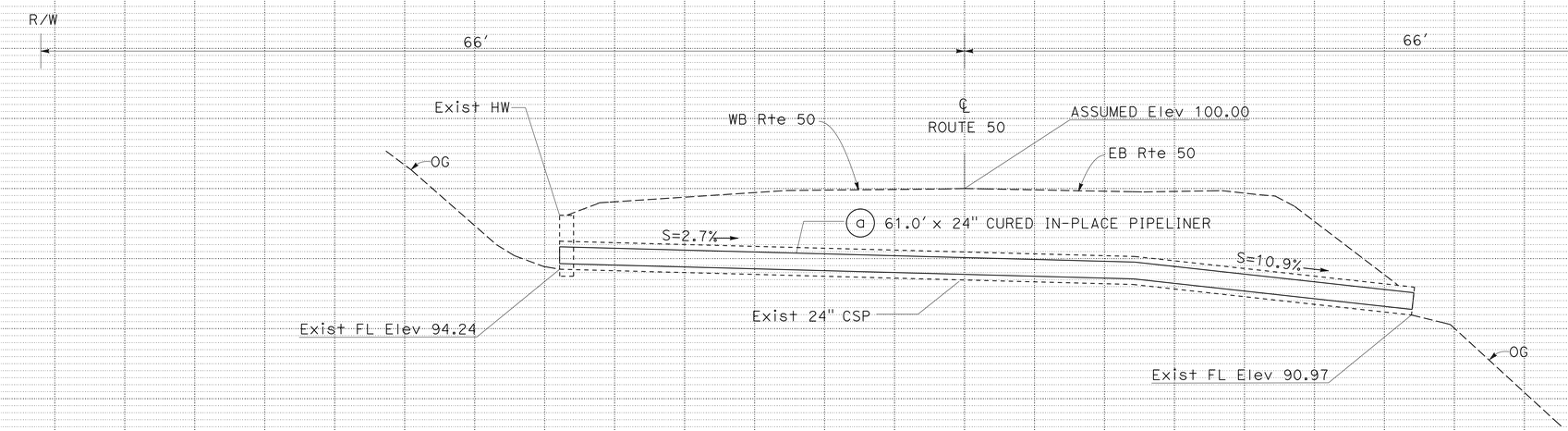

DRAINAGE SYSTEM No. 16
PM 53.09

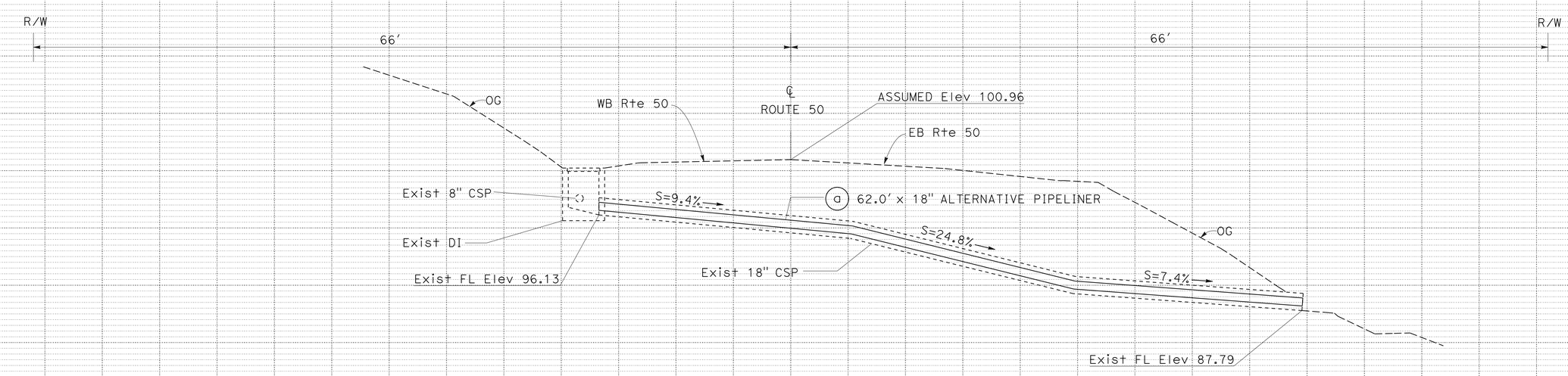

DRAINAGE SYSTEM No. 17
PM 53.12

DRAINAGE PROFILES

SCALE: 1"=5′ Horiz
1"=5′ Vert

DP-11

70 60 50 40 30 20 10 0 10 20 30 40 50 60 70

REVISED BY | DATE REVISED
NIK BEACH | RONALD S. SYKES
CALCULATED-DESIGNED BY | CHECKED BY
FUNCTIONAL SUPERVISOR | RONALD S. SYKES
STATE OF CALIFORNIA - DEPARTMENT OF TRANSPORTATION
Caltrans® MAINTENANCE DESIGN

LAST REVISION 00-00-00 | DATE PLOTTED => 03-JAN-2013 | TIME PLOTTED => 16:43

Dist	COUNTY	ROUTE	POST MILES TOTAL PROJECT	SHEET No.	TOTAL SHEETS
03	ED	50	51.6/53.2	14	25

REGISTERED CIVIL ENGINEER 12-28-12 DATE

12-31-12
PLANS APPROVAL DATE

REGISTERED PROFESSIONAL ENGINEER RONALD S. SYKES No. C35526 Exp. 9-30-13 CIVIL STATE OF CALIFORNIA

THE STATE OF CALIFORNIA OR ITS OFFICERS OR AGENTS SHALL NOT BE RESPONSIBLE FOR THE ACCURACY OR COMPLETENESS OF SCANNED COPIES OF THIS PLAN SHEET.

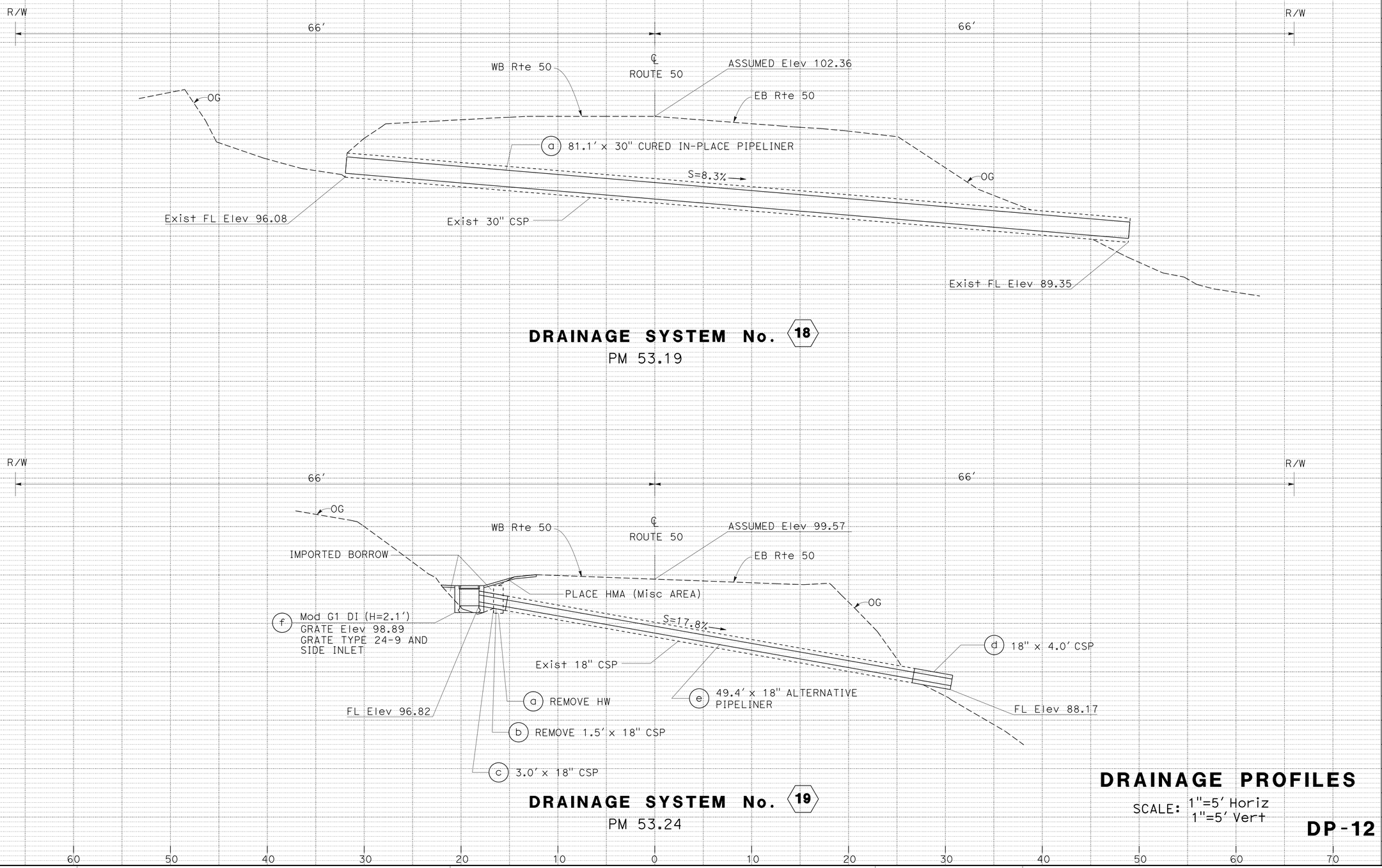

DRAINAGE PROFILES

SCALE: 1"=5′ Horiz
1"=5′ Vert

DP-12

REVISED BY | DATE REVISED

NIK BEACH | RONALD S. SYKES

CALCULATED-DESIGNED BY | CHECKED BY

FUNCTIONAL SUPERVISOR: RONALD S. SYKES

STATE OF CALIFORNIA - DEPARTMENT OF TRANSPORTATION
Caltrans® MAINTENANCE DESIGN

LAST REVISION 00-00-00 | DATE PLOTTED => 03-JAN-2013 | TIME PLOTTED => 16:43

Dist	COUNTY	ROUTE	POST MILES TOTAL PROJECT	SHEET No.	TOTAL SHEETS
03	ED	50	51.6/53.2	15	25

REGISTERED CIVIL ENGINEER 12-28-12 DATE

12-31-12
PLANS APPROVAL DATE

REGISTERED PROFESSIONAL ENGINEER RONALD S. SYKES No. C35526 Exp. 9-30-13 CIVIL STATE OF CALIFORNIA

THE STATE OF CALIFORNIA OR ITS OFFICERS OR AGENTS SHALL NOT BE RESPONSIBLE FOR THE ACCURACY OR COMPLETENESS OF SCANNED COPIES OF THIS PLAN SHEET.

NOTE:

FOR ACCURATE RIGHT OF WAY DATA, CONTACT RIGHT OF WAY ENGINEERING AT THE DISTRICT OFFICE.

LEGEND:

(No.) DRAINAGE SYSTEM No.

(X) DRAINAGE UNIT

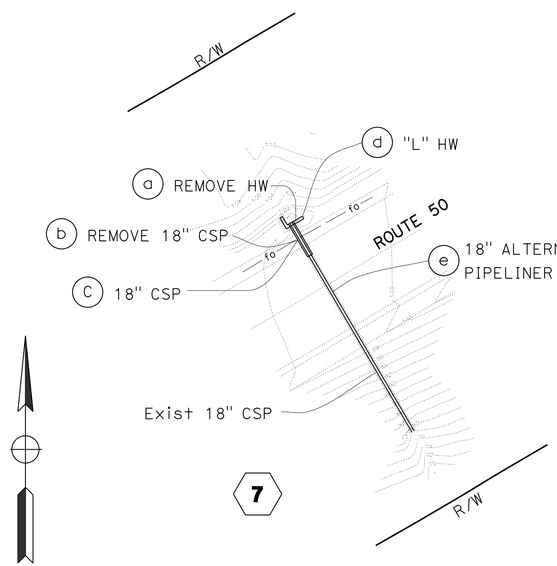

LOCATION 7 PLAN
ED 50 PM 52.24

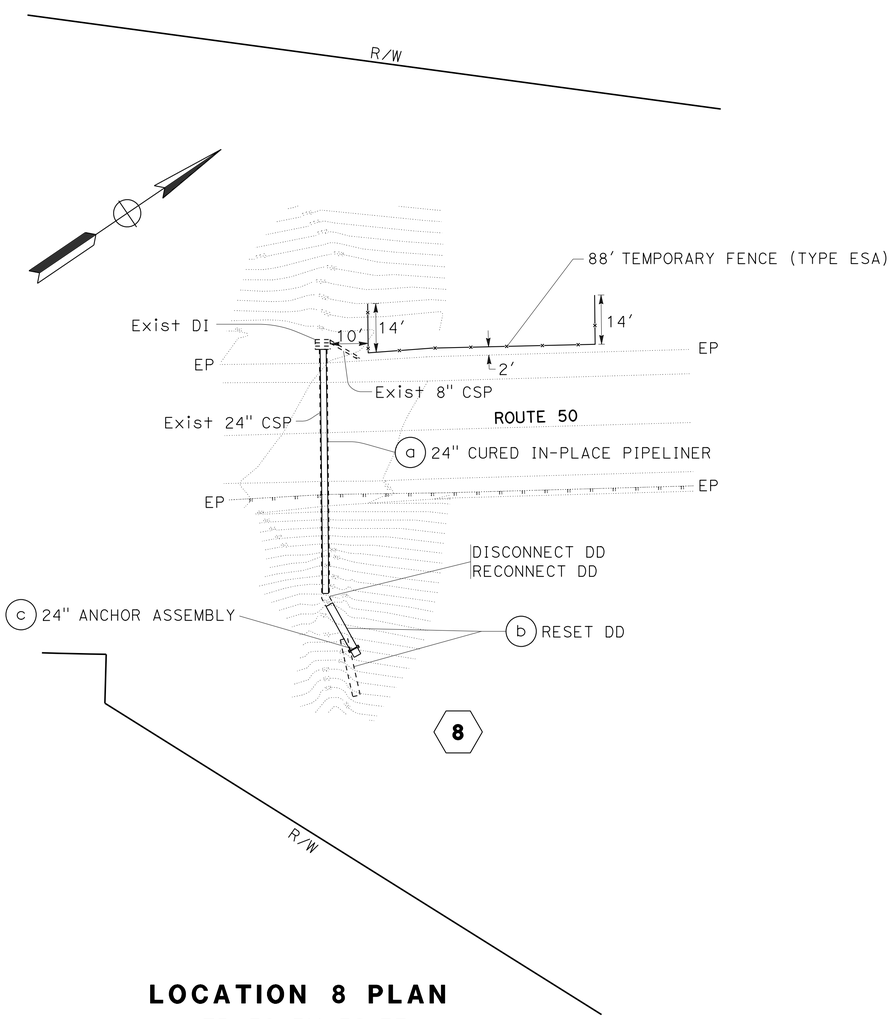

LOCATION 8 PLAN
ED 50 PM 52.33

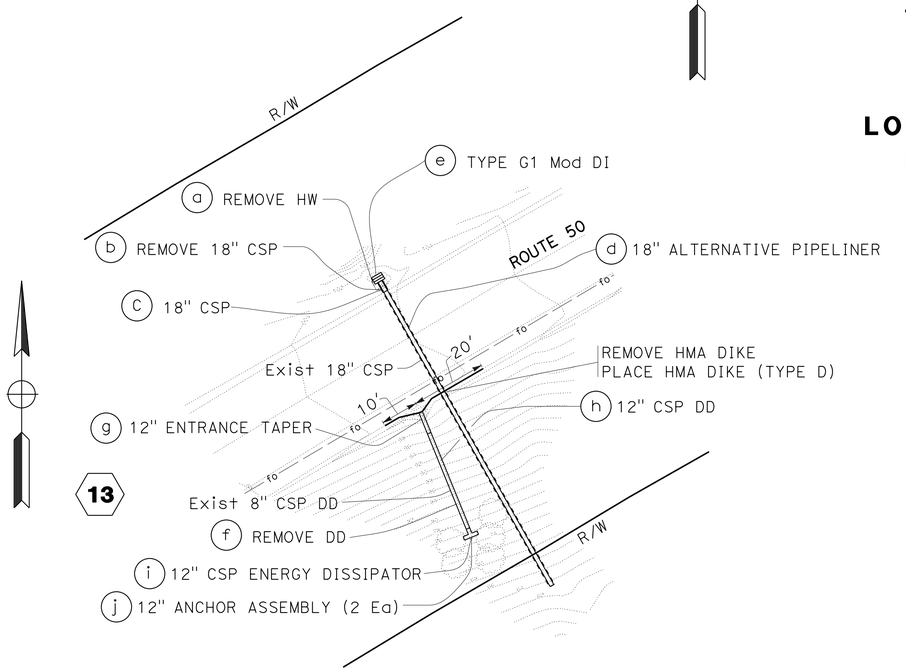

LOCATION 13 PLAN
ED 50 PM 52.92

DRAINAGE DETAILS

SCALE 1"=20'

DD-1

REVISED BY	DATE REVISED
NIK BEACH	RONALD S. SYKES
CALCULATED-DESIGNED BY	CHECKED BY
FUNCTIONAL SUPERVISOR	RONALD S. SYKES

STATE OF CALIFORNIA - DEPARTMENT OF TRANSPORTATION
Caltrans MAINTENANCE DESIGN

LAST REVISION 00-00-00 | DATE PLOTTED => 03-JAN-2013 | TIME PLOTTED => 16:43

Dist	COUNTY	ROUTE	POST MILES TOTAL PROJECT	SHEET No.	TOTAL SHEETS
03	ED	50	51.6/53.2	16	25

REGISTERED CIVIL ENGINEER 12-28-12 DATE

12-31-12
PLANS APPROVAL DATE

REGISTERED PROFESSIONAL ENGINEER RONALD S. SYKES No. C35526 Exp. 9-30-13 CIVIL STATE OF CALIFORNIA

THE STATE OF CALIFORNIA OR ITS OFFICERS OR AGENTS SHALL NOT BE RESPONSIBLE FOR THE ACCURACY OR COMPLETENESS OF SCANNED COPIES OF THIS PLAN SHEET.

NOTES:

1. FOR DETAILS NOT SHOWN, SEE STANDARD PLAN D73.
2. WALLS AND BOTTOM OF SIDE INLET SHALL BE REINFORCED WITH #5 BARS @ 9" CENTERS (BOTH WAYS) PLACED 1½" CLEAR TO INSIDE OF BOX.
3. DRILL AND BOND DOWELS (#5 BARS) @ 6" CENTERS TO ATTACH SIDE INLET TO G1 DI. USE 12" DOWELS ON SIDE WALLS AND BOTTOM, 6" DOWELS ELSEWHERE.
4. FOR SIDE INLET GRATE, USE 3" OD STEEL PIPE (0.500 IN THICK) CONFORMING TO: ASTM A 513 TYPE 5, (TOTAL GRATE WEIGHT 117 LBS.)
5. FOR SIDE INLET FRAME, USE 4" X 3" X ¼" STRUCTURAL STEEL ANGLE CONFORMING TO: ASTM A 36, (TOTAL FRAME WEIGHT 58 LBS.)
6. FOR ALL FRAMES, USE Alt ANCHOR. SEE STANDARD PLAN D77A.
7. PLACE DRAINAGE INLET SO THAT THE SIDE INLET WILL RECEIVE PREVAILING FLOW.

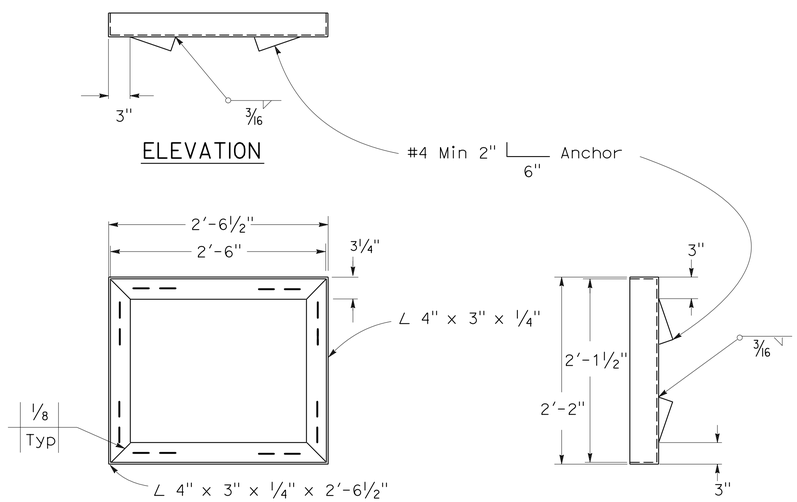

SIDE INLET FRAME

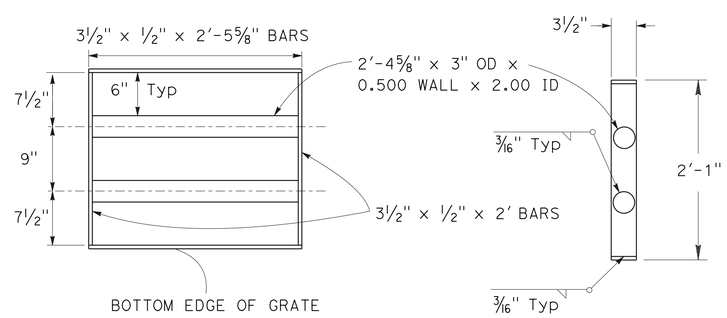

SIDE INLET GRATE

PLAN

RIGHT SIDE

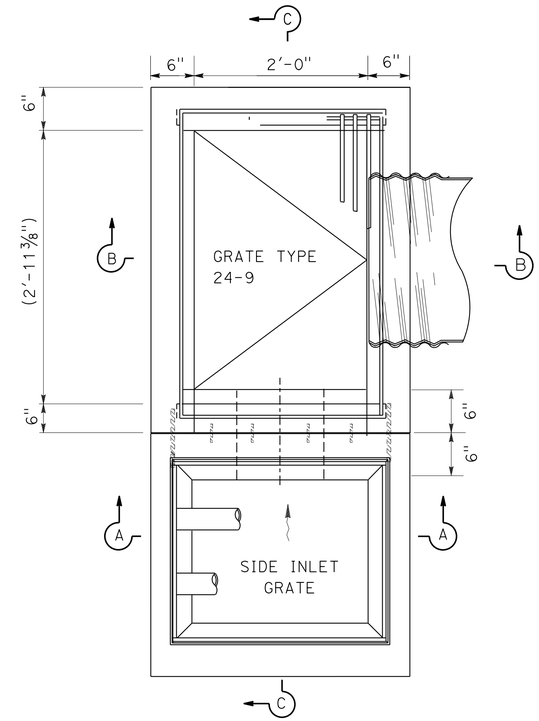

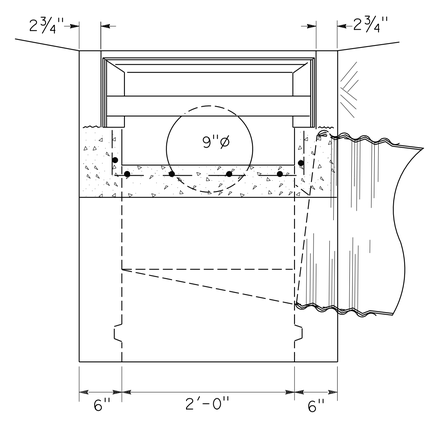

SECTION A-A

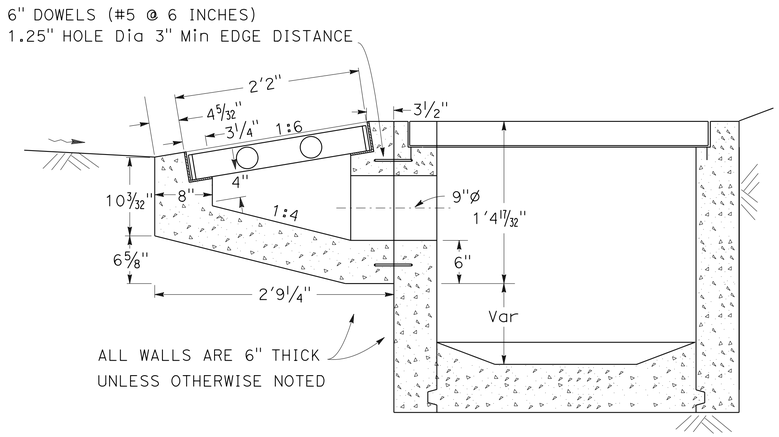

SECTION C-C

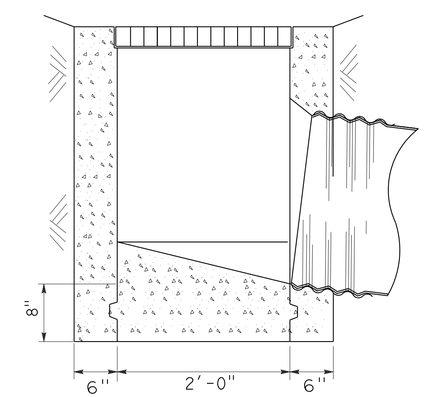

SECTION B-B

MODIFIED G1 DI WITH SIDE INLET

DRAINAGE DETAILS

NO SCALE

DD-2

STATE OF CALIFORNIA - DEPARTMENT OF TRANSPORTATION
Caltrans® MAINTENANCE DESIGN

FUNCTIONAL SUPERVISOR: RONALD S. SYKES
CALCULATED-DESIGNED BY: NIK BEACH
CHECKED BY: RONALD S. SYKES
REVISED BY
DATE REVISED

LAST REVISION 00-00-00
DATE PLOTTED => 03-JAN-2013
TIME PLOTTED => 16:43

Dist	COUNTY	ROUTE	POST MILES TOTAL PROJECT	SHEET No.	TOTAL SHEETS
03	ED	50	51.6/53.2	17	25

REGISTERED CIVIL ENGINEER 12-28-12 DATE

12-31-12
PLANS APPROVAL DATE

REGISTERED PROFESSIONAL ENGINEER RONALD S. SYKES No. C35526 Exp. 9-30-13 CIVIL STATE OF CALIFORNIA

THE STATE OF CALIFORNIA OR ITS OFFICERS OR AGENTS SHALL NOT BE RESPONSIBLE FOR THE ACCURACY OR COMPLETENESS OF SCANNED COPIES OF THIS PLAN SHEET.

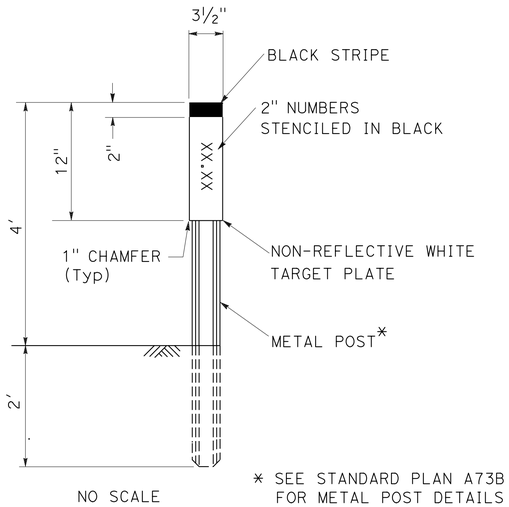

STENCILED NUMBERS

DRAINAGE SYSTEM No.	XX.XX
1	51.63
2	51.82
3	51.91
4	51.95
5	52.00
6	52.20
7	52.24
8	52.33
9	R52.55
10	R52.61
11	52.76
12	52.87
13	52.92
14	52.96
15	53.00
16	53.09
17	53.12
18	53.19
19	53.24

MARKER (CULVERT)

MARKER (CULVERT) NOTES:

1. PLACE TWO EACH PER LOCATION (LEFT AND RIGHT).
2. PLACE MINIMUM 2' AND MAXIMUM 12' FROM EDGE OF PAVEMENT.
3. EXACT LOCATION TO BE DETERMINED BY THE ENGINEER.

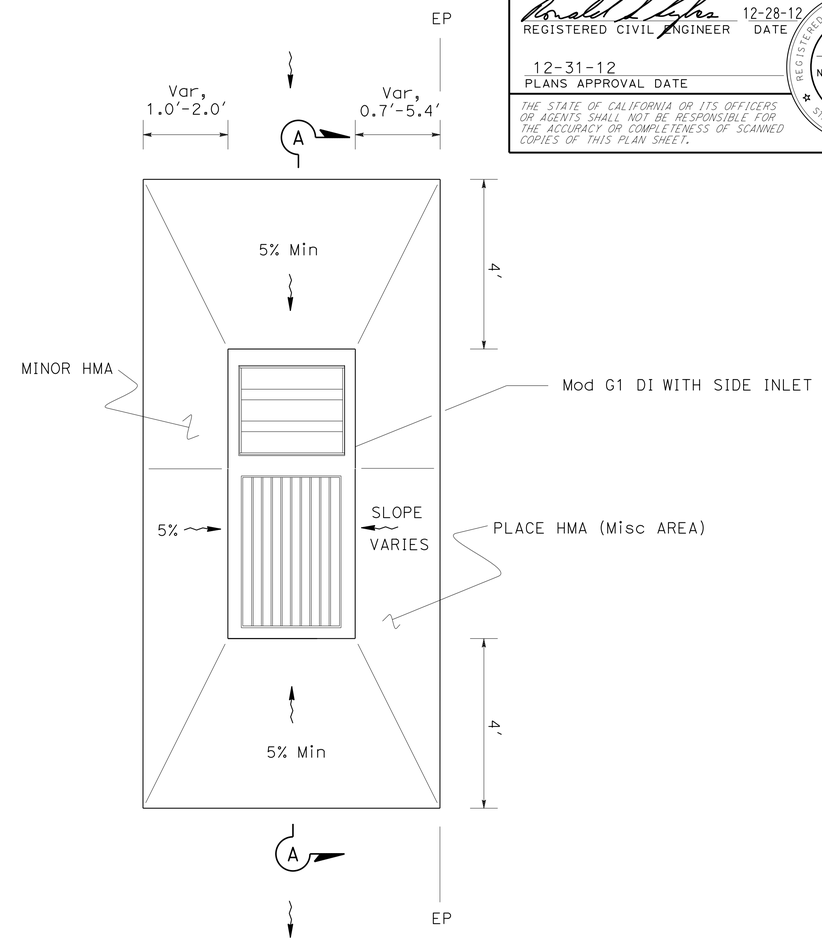

Misc HMA AT INLET

DRAINAGE SYSTEM No. 6 13 15 19

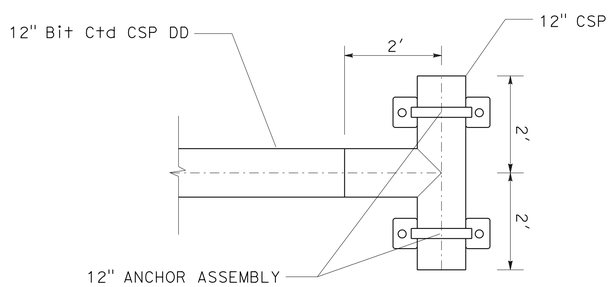

ENERGY DISSIPATOR

DRAINAGE SYSTEM No. 13

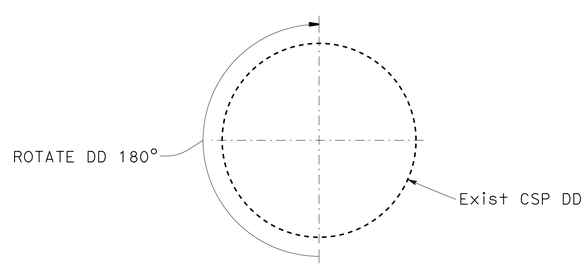

RESET DOWNDRAIN DETAIL - SECTION

DRAINAGE SYSTEM No. 2, 5, 8

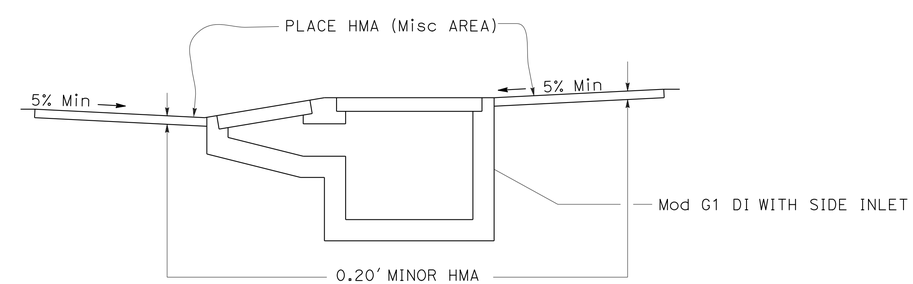

SECTION A-A

DRAINAGE DETAILS

NO SCALE

DD-3

STATE OF CALIFORNIA - DEPARTMENT OF TRANSPORTATION
Caltrans® MAINTENANCE DESIGN

FUNCTIONAL SUPERVISOR: RONALD S. SYKES
CALCULATED-DESIGNED BY: NIK BEACH
CHECKED BY: RONALD S. SYKES
REVISED BY
DATE REVISED

LAST REVISION 00-00-00
DATE PLOTTED => 03-JAN-2013
TIME PLOTTED => 16:43

Dist	COUNTY	ROUTE	POST MILES TOTAL PROJECT	SHEET No.	TOTAL SHEETS
03	ED	50	51.6/53.2	18	25

REGISTERED CIVIL ENGINEER 12-28-12 DATE

12-31-12
PLANS APPROVAL DATE

REGISTERED PROFESSIONAL ENGINEER RONALD S. SYKES No. C35526 Exp. 9-30-13 CIVIL STATE OF CALIFORNIA

THE STATE OF CALIFORNIA OR ITS OFFICERS OR AGENTS SHALL NOT BE RESPONSIBLE FOR THE ACCURACY OR COMPLETENESS OF SCANNED COPIES OF THIS PLAN SHEET.

ALTERNATIVE PIPELINERS

DESCRIPTION	DEFORMED/REFORMED HDPE PIPELINER	CURED-IN-PLACE PIPELINER	PLASTIC* PIPELINER
18" ALTERNATIVE PIPELINER	X	X	
30" ALTERNATIVE PIPELINER		X	X

*PLASTIC PIPELINER SHALL BE 26 INCH OUTSIDE DIAMETER, STANDARD DIMENSION RATIO 26, HDPE.

ABBREVIATION:
WT - WATER TIGHT

DRAINAGE QUANTITIES

CLEANING, INSPECTING, AND PREPARING CULVERT	18" ALTERNATIVE PIPELINER	30" ALTERNATIVE PIPELINER	24" CURED-IN-PLACE PIPELINER	30" CURED-IN-PLACE PIPELINER	REMOVE 18" CORRUGATED STEEL PIPE	18" CORRUGATED STEEL PIPE (.109" THICK)	12" ENTRANCE TAPER	12" CORRUGATED STEEL PIPE DOWNDRAIN (.138" THICK)	12" CORRUGATED STEEL PIPE ENERGY DISSIPATOR (.138" THICK)	24" STEEL FLARED END SECTION	RESET DOWNDRAIN	RESET DEBRIS RACK	REMOVE INLET	REMOVE DOWNDRAIN	REMOVE HEADWALL	MINOR CONCRETE (MINOR STRUCTURE)	MISCELLANEOUS IRON AND STEEL	12" ANCHOR ASSEMBLY	24" ANCHOR ASSEMBLY	IMPORTED BORROW	REMOVE ASPHALT CONCRETE DIKE	PLACE HOT MIX ASPHALT DIKE (TYPE D)	PLACE HOT MIX ASPHALT (MISCELLANEOUS AREA)	MINOR HOT MIX ASPHALT	REMOVE MARKER (CULVERT)	MARKER (CULVERT)	TEMPORARY FENCE (TYPE ESA)	(N) DISCONNECT DOWNDRAIN RECONNECT DOWNDRAIN	(N) PIPE JOINT CLASSIFICATION	(N) HEIGHT OF INLET	DESCRIPTION	DRAINAGE SHEET No.	DRAINAGE SYSTEM No. ⬡	DRAINAGE UNIT ○
LF	LF	LF	LF	LF	LF	LF	EA	LF	EA	EA	EA	EA	EA	EA	EA	CY	LB	EA	EA	CY	LF	LF	SQYD	TON	EA	EA	LF	EA		LF			
182.5			182.5																												24" CURED IN-PLACE PIPELINER	DP-1	1	a
										1															2	2					24" STEEL FES			b
115.7				115.7																								1			30" CURED IN-PLACE PIPELINER	DP-2	2	a
											1														2	2			WT		RESET DOWNDRAIN			b
86.9		86.9																							2	2					30" ALTERNATIVE PIPELINER	DP-3	3	a
75.0			75.0																						2	2					24" CURED IN-PLACE PIPELINER	DP-3	4	a
77.5			77.5																						2	2		1			24" CURED IN-PLACE PIPELINER	DP-4	5	a
											1																		WT		RESET DOWNDRAIN			b
					2.0																										REMOVE 18" CSP	DP-4	6	a
						2.0																							Std		18" CSP			b
													1												2	2					REMOVE 36" CSP INLET			c
107.1	107.1																														18" ALTERNATIVE PIPELINER			d
																1.22	438						5.7	0.8					2.9	TYPE G1 Mod DI			e
															1																REMOVE HW	DP-5	7	a
					10.0																										REMOVE 18" CSP			b
						10.0																		1.4	2	2			Std		18" CSP			c
																1.04															"L" HW (W=3'-4")			d
66.1	66.1																														18" ALTERNATIVE PIPELINER			e
710.8	173.2	86.9	335.0	115.7	12.0	12.0	0	0	0	1	2	0	1	0	1	2.26	438	0	0	0	0	0	5.7	2.2	14	14	0	2			SHEET DQ-1 TOTAL			

(N) - NOT A SEPARATE PAY ITEM, FOR INFORMATION ONLY.

DRAINAGE QUANTITIES
DQ-1

REVISED BY | DATE REVISED
NIK BEACH | RONALD S. SYKES
CALCULATED-DESIGNED BY | CHECKED BY
FUNCTIONAL SUPERVISOR: RONALD S. SYKES

STATE OF CALIFORNIA - DEPARTMENT OF TRANSPORTATION
Caltrans® MAINTENANCE DESIGN

LAST REVISION 00-00-00 | DATE PLOTTED => 03-JAN-2013 | TIME PLOTTED => 16:43

Dist	COUNTY	ROUTE	POST MILES TOTAL PROJECT	SHEET No.	TOTAL SHEETS
03	ED	50	51.6/53.2	19	25

REGISTERED CIVIL ENGINEER 12-28-12 DATE

12-31-12
PLANS APPROVAL DATE

REGISTERED PROFESSIONAL ENGINEER RONALD S. SYKES No. C35526 Exp. 9-30-13 CIVIL STATE OF CALIFORNIA

THE STATE OF CALIFORNIA OR ITS OFFICERS OR AGENTS SHALL NOT BE RESPONSIBLE FOR THE ACCURACY OR COMPLETENESS OF SCANNED COPIES OF THIS PLAN SHEET.

DRAINAGE QUANTITIES

CLEANING, INSPECTING, AND PREPARING CULVERT	18" ALTERNATIVE PIPELINER	30" ALTERNATIVE PIPELINER	24" CURED-IN-PLACE PIPELINER	30" CURED-IN-PLACE PIPELINER	REMOVE 18" CORRUGATED STEEL PIPE	18" CORRUGATED STEEL PIPE (.109" THICK)	12" ENTRANCE TAPER	12" CORRUGATED STEEL PIPE DOWNDRAIN (.138" THICK)	12" CORRUGATED STEEL PIPE ENERGY DISSIPATOR (.138" THICK)	24" STEEL FLARED END SECTION	RESET DOWNDRAIN	RESET DEBRIS RACK	REMOVE INLET	REMOVE DOWNDRAIN	REMOVE HEADWALL	MINOR CONCRETE (MINOR STRUCTURE)	MISCELLANEOUS IRON AND STEEL	12" ANCHOR ASSEMBLY	24" ANCHOR ASSEMBLY	IMPORTED BORROW	REMOVE ASPHALT CONCRETE DIKE	PLACE HOT MIX ASPHALT DIKE (TYPE D)	PLACE HOT MIX ASPHALT (MISCELLANEOUS AREA)	MINOR HOT MIX ASPHALT	REMOVE MARKER (CULVERT)	MARKER (CULVERT)	TEMPORARY FENCE (TYPE ESA)	(N) DISCONNECT DOWNDRAIN RECONNECT DOWNDRAIN	(N) PIPE JOINT CLASSIFICATION	(N) HEIGHT OF INLET	DESCRIPTION	DRAINAGE SHEET No.	DRAINAGE SYSTEM No. ⬡	DRAINAGE UNIT ○
LF	LF	LF	LF	LF	LF	LF	EA	LF	EA	EA	EA	EA	EA	EA	EA	CY	LB	EA	EA	CY	LF	LF	SQYD	TON	EA	EA	LF	EA		LF			
64.5			64.5																												24" CURED IN-PLACE PIPELINER	DP-5	8	a
											1														2	2	88	1	WT		RESET DOWNDRAIN			b
																			1												24" ANCHOR ASSEMBLY			c
109.5			109.5																						2	2					24" CURED IN-PLACE PIPELINER	DP-6	9	a
128.0			128.0																						2	2					24" CURED IN-PLACE PIPELINER	DP-7	10	a
73.5			73.5																						2	2					24" CURED IN-PLACE PIPELINER	DP-8	11	a
												1																			RESET DEBRIS RACK			b
					2.0																				2	2					REMOVE 18" CSP	DP-8	12	a
						2.0																							Std		18" CSP			b
48.7	48.7																														18" ALTERNATIVE PIPELINER			c
															1										2	2					REMOVE HW	DP-9	13	a
					1.5																										REMOVE 18" CSP			b
						3.0																							Std		18" CSP			c
99.5	99.5																														18" ALTERNATIVE PIPELINER			d
																1.11	438			2.1			8.0	1.1						2.2	TYPE G1 Mod DI			e
														1							30										REMOVE DD			f
							1															30	6.0	2.8							12" ENTRANCE TAPER			g
								34.0																					WT		12" CSP DD			h
									1																						12" CSP ENERGY DISSIPATOR			i
																		2													12" ANCHOR ASSEMBLY			j
523.7	148.2	0	375.5	0	3.5	5.0	1	34.0	1	0	1	1	0	1	1	1.11	438	2	1	2.1	30	30	14.0	3.9	12	12	88	1			SHEET DQ-2 TOTAL		

(N) - NOT A SEPARATE PAY ITEM, FOR INFORMATION ONLY.

DRAINAGE QUANTITIES

DQ-2

STATE OF CALIFORNIA - DEPARTMENT OF TRANSPORTATION
Caltrans MAINTENANCE DESIGN

FUNCTIONAL SUPERVISOR: RONALD S. SYKES
CALCULATED-DESIGNED BY: NIK BEACH
CHECKED BY: RONALD S. SYKES
REVISED BY
DATE REVISED

LAST REVISION 00-00-00
DATE PLOTTED => 03-JAN-2013
TIME PLOTTED => 16:43

Dist	COUNTY	ROUTE	POST MILES TOTAL PROJECT	SHEET No.	TOTAL SHEETS
03	ED	50	51.6/53.2	20	25

REGISTERED CIVIL ENGINEER 12-28-12 DATE

12-31-12
PLANS APPROVAL DATE

REGISTERED PROFESSIONAL ENGINEER RONALD S. SYKES No. C35526 Exp. 9-30-13 CIVIL STATE OF CALIFORNIA

THE STATE OF CALIFORNIA OR ITS OFFICERS OR AGENTS SHALL NOT BE RESPONSIBLE FOR THE ACCURACY OR COMPLETENESS OF SCANNED COPIES OF THIS PLAN SHEET.

DRAINAGE QUANTITIES

CLEANING, INSPECTING, AND PREPARING CULVERT	18" ALTERNATIVE PIPELINER	30" ALTERNATIVE PIPELINER	24" CURED-IN-PLACE PIPELINER	30" CURED-IN-PLACE PIPELINER	REMOVE 18" CORRUGATED STEEL PIPE	18" CORRUGATED STEEL PIPE (.109" THICK)	12" ENTRANCE TAPER	12" CORRUGATED STEEL PIPE DOWNDRAIN (.138" THICK)	12" CORRUGATED STEEL PIPE ENERGY DISSIPATOR (.138" THICK)	24" STEEL FLARED END SECTION	RESET DOWNDRAIN	RESET DEBRIS RACK	REMOVE INLET	REMOVE DOWNDRAIN	REMOVE HEADWALL	MINOR CONCRETE (MINOR STRUCTURE)	MISCELLANEOUS IRON AND STEEL	12" ANCHOR ASSEMBLY	24" ANCHOR ASSEMBLY	IMPORTED BORROW	REMOVE ASPHALT CONCRETE DIKE	PLACE HOT MIX ASPHALT DIKE (TYPE D)	PLACE HOT MIX ASPHALT (MISCELLANEOUS AREA)	MINOR HOT MIX ASPHALT	REMOVE MARKER (CULVERT)	MARKER (CULVERT)	TEMPORARY FENCE (TYPE ESA)	(N) DISCONNECT DOWNDRAIN RECONNECT DOWNDRAIN	(N) PIPE JOINT CLASSIFICATION	(N) HEIGHT OF INLET	DESCRIPTION	DRAINAGE SHEET No.	DRAINAGE SYSTEM No. ⬡	DRAINAGE UNIT ○
LF	LF	LF	LF	LF	LF	LF	EA	LF	EA	EA	EA	EA	EA	EA	EA	CY	LB	EA	EA	CY	LF	LF	SQYD	TON	EA	EA	LF	EA		LF			
102.0	102.0																								2	2					18" ALTERNATIVE PIPELINER	DP-10	14	a
															1																REMOVE HW	DP-10	15	a
					1.5																										REMOVE 18" CSP			b
						1.5																			2	2			Std		18" CSP			c
71.5	71.5																														18" ALTERNATIVE PIPELINER			d
																1.33	438			3.2			8.6	1.2						3.2	TYPE G1 Mod DI			e
61.0			61.0																						2	2					24" CURED IN-PLACE PIPELINER	DP-11	16	a
62.0	62.0																								2	2					18" ALTERNATIVE PIPELINER	DP-11	17	a
81.1				81.1																					2	2					30" CURED IN-PLACE PIPELINER	DP-12	18	a
															1																REMOVE HW	DP-12	19	a
					1.5																										REMOVE 18" CSP			b
						3.0																							Std		18" CSP			c
						4.0																			2	2			Std		18" CSP			d
49.4	49.4																														18" ALTERNATIVE PIPELINER			e
																1.09	438			3.0			13.3	1.8						2.1	TYPE G1 Mod DI			f
427.0	284.9	0	61.0	81.1	3.0	8.5	0	0	0	0	0	0	0	0	2	2.44	876	0	0	6.2	0	0	21.9	3.0	12	12	0	0			SHEET DQ-3 TOTAL			
710.8	173.2	86.9	335.0	115.7	12.0	12.0	0	0	0	1	2	0	1	0	1	2.26	438	0	0	0	0	0	5.7	2.2	14	14	0	2			SHEET DQ-1 TOTAL			
523.7	148.2	0	375.5	0	3.5	5.0	1	34.0	1	0	1	1	0	1	1	1.09	438	2	1	2.1	30	30	14.0	3.9	12	12	88	1			SHEET DQ-2 TOTAL			
1661.5	606.3	86.9	771.5	196.8	18.5	25.5	1	34.0	1	1	3	1	1	1	4	5.79	1752	2	1	8.3	30	30	41.6	9.1	38	38	88	3			TOTAL			

(N) - NOT A SEPARATE PAY ITEM, FOR INFORMATION ONLY.

DRAINAGE QUANTITIES
DQ-3

STATE OF CALIFORNIA - DEPARTMENT OF TRANSPORTATION
Caltrans® MAINTENANCE DESIGN

FUNCTIONAL SUPERVISOR: RONALD S. SYKES
CALCULATED-DESIGNED BY: NIK BEACH
CHECKED BY: RONALD S. SYKES
REVISED BY
DATE REVISED

LAST REVISION 00-00-00
DATE PLOTTED => 03-JAN-2013
TIME PLOTTED => 16:43

Dist	COUNTY	ROUTE	POST MILES TOTAL PROJECT	SHEET No.	TOTAL SHEETS
03	ED	50	51.6/53.2	21	25

REGISTERED CIVIL ENGINEER 12-7-12 DATE

12-31-12
PLANS APPROVAL DATE

REGISTERED PROFESSIONAL ENGINEER Gurinderpal Bhullar No. C48815 Exp. 9-30-14 CIVIL STATE OF CALIFORNIA

THE STATE OF CALIFORNIA OR ITS OFFICERS OR AGENTS SHALL NOT BE RESPONSIBLE FOR THE ACCURACY OR COMPLETENESS OF SCANNED COPIES OF THIS PLAN SHEET.

TYPICAL LANE CLOSURE

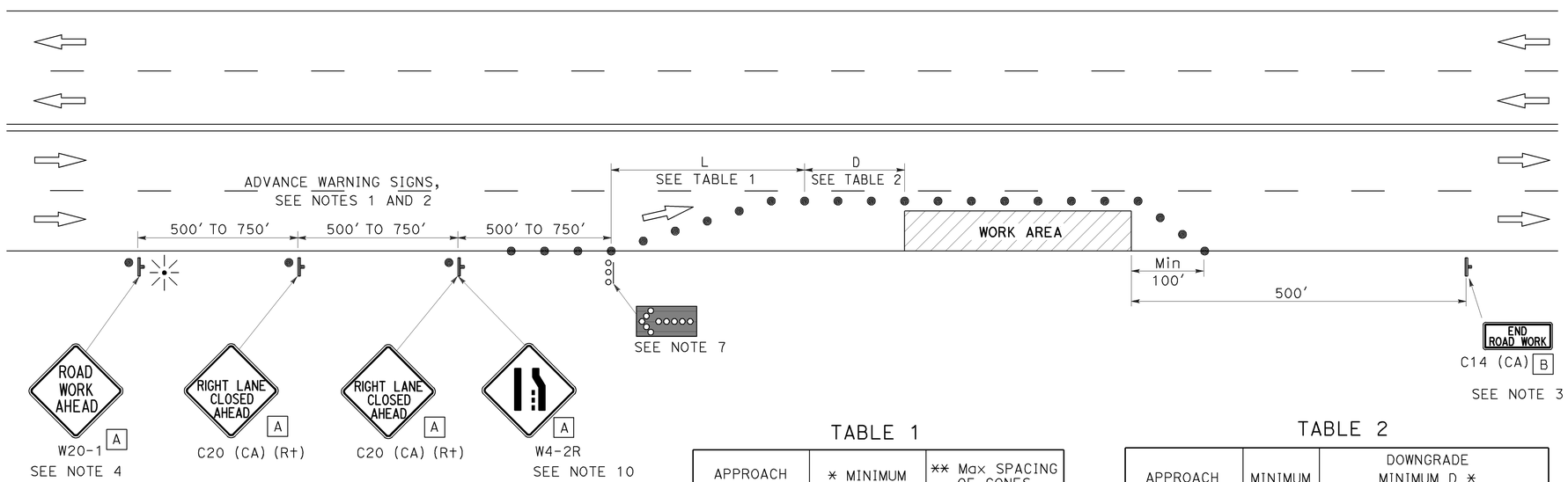

NOTES:

Unless otherwise specified in the special provisions, all temporary warning signs shall have black legend on orange background.

California code are designated by (CA). Otherwise, Federal (MUTCD) codes are shown.

LEGEND

- TRAFFIC CONE
- TEMPORARY SIGN
- FLASHING ARROW SIGN (FAS)
- FAS SUPPORT OR TRAILER
- PORTABLE FLASHING BEACON

SIGN PANEL SIZE (Min)

A 36" x 36"

B 36" x 18"

TABLE 1

APPROACH SPEED	* MINIMUM L	** Max SPACING OF CONES ALONG TAPER
mph	ft	ft
20 AND BELOW	80	20
25	125	25
30	180	30
35	245	35
40	320	40
45	540	45
50	600	50
Over 50	SEE NOTE 9	

* USE L FOR LANE WIDTHS LESS THAN OR EQUAL TO 12'.
** SEE NOTE 8.

TABLE 2

APPROACH SPEED	MINIMUM D	DOWNGRADE MINIMUM D *		
		-3%	-6%	-9%
mph	ft	ft	ft	ft
25 AND BELOW	155	158	165	173
30	200	205	215	227
35	250	257	271	287
40	305	315	333	354
45	360	378	400	427
50	425	446	474	507
OVER 50	SEE NOTE 9			

* USE ON SUSTAINED DOWNGRADE STEEPER THAN -3 PERCENT AND LONGER THAN 1 MILE.

NOTES:

1. Where approach speeds are low, advance warning signs may be placed at 300' spacing and placed closer in urban areas.
2. Each advance warning sign shall be equipped with at least two flags for daytime closure. Each flag shall be at least 16" x 16" in size and shall be orange or fluorescent red-orange in color. Flashing beacons shall be placed at the locations indicated for lane closure during hours of darkness.
3. A C14 (CA) "END ROAD WORK" sign, as appropriate, shall be placed at the end of the lane closure unless the end of work area is obvious, or ends within a larger project's limits.
4. If the W20-1 sign would follow within 2000' of a stationary W20-1 or C11 (CA) "ROAD WORK NEXT _____ MILES", use a C20 (CA) sign for the first advance warning sign.
5. All cones used for lane closures during the hours of darkness shall be fitted with retroreflective bands (or sleeves) as specified in the specifications.
6. Portable delineators, placed at one-half the spacing indicated for traffic cones, may be used instead of cones for daytime closures only.
7. Flashing arrow sign shall be either Type I or Type II.
8. The maximum spacing between cones along a tangent shall be 50' and along a taper shall be approximately as shown in Table 1.
9. For approach speeds over 50 mph, use the "Traffic Control System for Lane Closure On Freeways And Expressways" plan for lane closure details and requirements.
10. When specified in the special provisions, a W4-2 "LANE ENDS" symbol sign is to be used in place of the C20 (CA) "RIGHT LANE CLOSED AHEAD" sign.

STATE OF CALIFORNIA
DEPARTMENT OF TRANSPORTATION

TRAFFIC CONTROL SYSTEM FOR LANE CLOSURE ON MULTILANE CONVENTIONAL HIGHWAYS

NO SCALE

TCS-1

STATE OF CALIFORNIA - DEPARTMENT OF TRANSPORTATION

Caltrans

FUNCTIONAL SUPERVISOR | CALCULATED-DESIGNED BY | CHECKED BY | REVISED BY | DATE REVISED

LAST REVISION 00-00-00 | DATE PLOTTED => 10-DEC-2012 | TIME PLOTTED => 09:45

Dist	COUNTY	ROUTE	POST MILES TOTAL PROJECT	SHEET No.	TOTAL SHEETS
03	ED	50	51.6/53.2	22	25

REGISTERED CIVIL ENGINEER 12-7-12 DATE

12-31-12
PLANS APPROVAL DATE

REGISTERED PROFESSIONAL ENGINEER Gurinderpal Bhullar No. C48815 Exp. 9-30-14 CIVIL STATE OF CALIFORNIA

THE STATE OF CALIFORNIA OR ITS OFFICERS OR AGENTS SHALL NOT BE RESPONSIBLE FOR THE ACCURACY OR COMPLETENESS OF SCANNED COPIES OF THIS PLAN SHEET.

LEGEND

- TRAFFIC CONE
- TEMPORARY SIGN
- FLASHING ARROW SIGN (FAS)
- FAS SUPPORT OR TRAILER
- PORTABLE FLASHING BEACON

TABLE 1

APPROACH SPEED	* MINIMUM L	** Max SPACING OF CONES ALONG TAPER
mph	ft	ft
20 and below	80	20
25	125	25
30	180	30
35	245	35
40	320	40
45	540	45
50	600	50
OVER 50	SEE NOTE 11	

* USE L FOR LANE WIDTHS LESS THAN OR EQUAL TO 12'.
** SEE NOTE 10.

TABLE 2

APPROACH SPEED	MINIMUM D	DOWNGRADE MINIMUM D *		
		-3%	-6%	-9%
mph	ft	ft	ft	ft
25 AND BELOW	155	158	165	173
30	200	205	215	227
35	250	257	271	287
40	305	315	333	354
45	360	378	400	427
50	425	446	474	507
OVER 50	SEE NOTE 11			

* USE ON SUSTAINED DOWNGRADE STEEPER THAN -3 PERCENT AND LONGER THAN 1 MILE.

TYPICAL CLOSING OF HALF ROADWAY

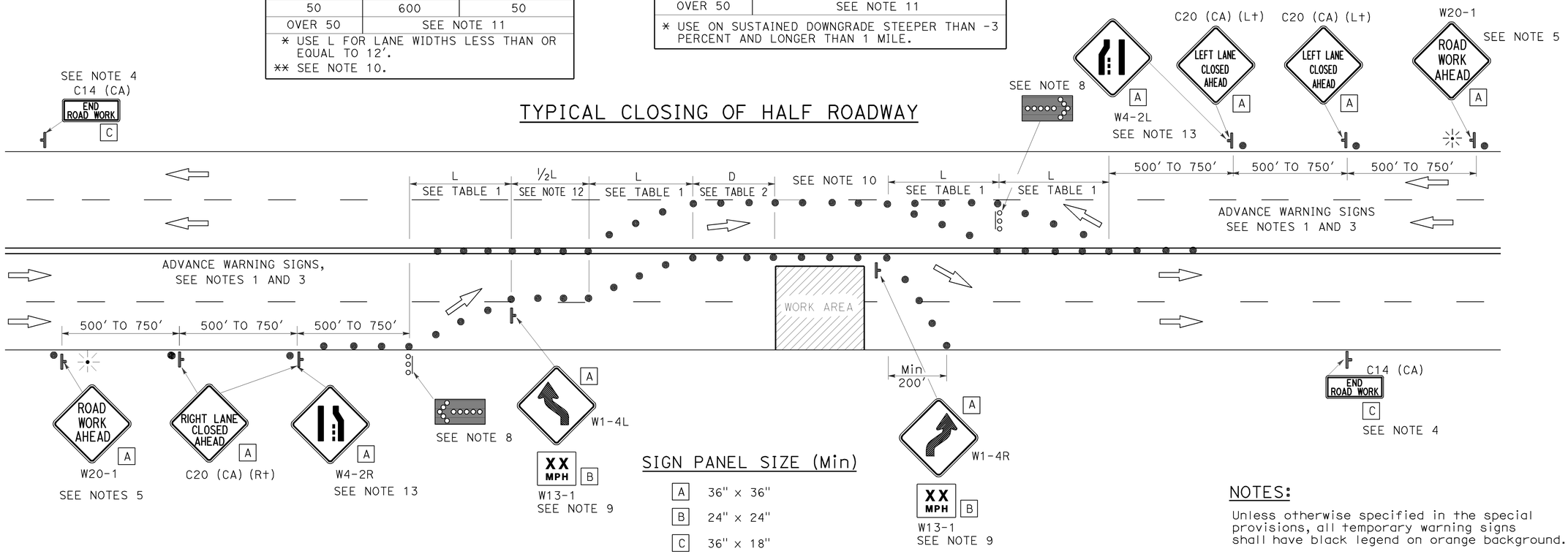

SIGN PANEL SIZE (Min)

A	36" x 36"
B	24" x 24"
C	36" x 18"

NOTES:

Unless otherwise specified in the special provisions, all temporary warning signs shall have black legend on orange background.

California code are designated by (CA). Otherwise, Federal (MUTCD) codes are shown.

NOTES:

1. Where Approach speeds are low, advance warning signs may be placed at 300' spacing and placed closer in urban areas.
2. At least one person shall be assigned to provide full time maintenance of traffic control devices for lane closure unless, otherwise directed by the Engineer.
3. Each advance warning sign in each direction of travel shall be equipped with at least two flags for daytime closure. Each flag shall be at least 16" x 16" in size and shall be orange or fluorescent red-orange in color. Flashing beacons shall be placed at the locations indicated for lane closure during hours of darkness.
4. A C14 (CA) "END ROAD WORK" sign, as appropriate, shall be placed at the end of the lane closure unless the end of work area is obvious, or ends within a larger project's limits.
5. If the W20-1 sign would follow within 2000' of a stationary W20-1 or C11 (CA) "ROAD WORK NEXT _____ MILES", use a C20 (CA) sign for the first advance warning sign.
6. All cones used for lane closures during the hours of darkness shall be fitted with retroreflective bands (or sleeves) as specified in the specifications.
7. Portable delineators, placed at one-half the spacing indicated for traffic cones, may be used instead of cones for daytime closures only.
8. Flashing arrow signs shall be either Type I or Type II.
9. Advisory speed will be determined by the Engineer. The W13-1 Sign will not be required when advisory speed is more than the posted or maximum speed limit.
10. The maximum spacing between cones along a tangent shall be 50' and along a taper shall be approximately as shown in Table 1.
11. For approach speeds over 50 mph, use the "Traffic Control System For Lane Closure On Freeways And Expressways" plan for lane closure details and requirements.
12. Unless otherwise specified in the special provisions, the (½ L) shown between the two (L) lane closure tapers shall be used.
13. When specified in the special provisions, a W4-2 "Lane Ends" symbol sign is to be used in place of the C20 (CA) "RIGHT (LEFT) LANE CLOSED AHEAD" sign.

STATE OF CALIFORNIA
DEPARTMENT OF TRANSPORTATION

TRAFFIC CONTROL SYSTEM FOR LANE CLOSURE ON MULTILANE CONVENTIONAL HIGHWAYS

NO SCALE

TCS-2

STATE OF CALIFORNIA - DEPARTMENT OF TRANSPORTATION
Caltrans

FUNCTIONAL SUPERVISOR | CALCULATED-DESIGNED BY | CHECKED BY | REVISED BY | DATE REVISED

LAST REVISION 00-00-00 | DATE PLOTTED => 10-DEC-2012 | TIME PLOTTED => 09:45

Dist	COUNTY	ROUTE	POST MILES TOTAL PROJECT	SHEET No.	TOTAL SHEETS
03	ED	50	51.6/53.2	23	25

REGISTERED CIVIL ENGINEER 12-7-12 DATE

12-31-12
PLANS APPROVAL DATE

REGISTERED PROFESSIONAL ENGINEER Gurinderpal Bhullar No. C48815 Exp. 9-30-14 CIVIL STATE OF CALIFORNIA

THE STATE OF CALIFORNIA OR ITS OFFICERS OR AGENTS SHALL NOT BE RESPONSIBLE FOR THE ACCURACY OR COMPLETENESS OF SCANNED COPIES OF THIS PLAN SHEET.

NOTES:

Unless otherwise specified in the special provisions, all temporary warning signs shall have black legend on orange background.

California code are designated by (CA). Otherwise, Federal (MUTCD) codes are shown.

TYPICAL LANE CLOSURE WITH REVERSIBLE CONTROL

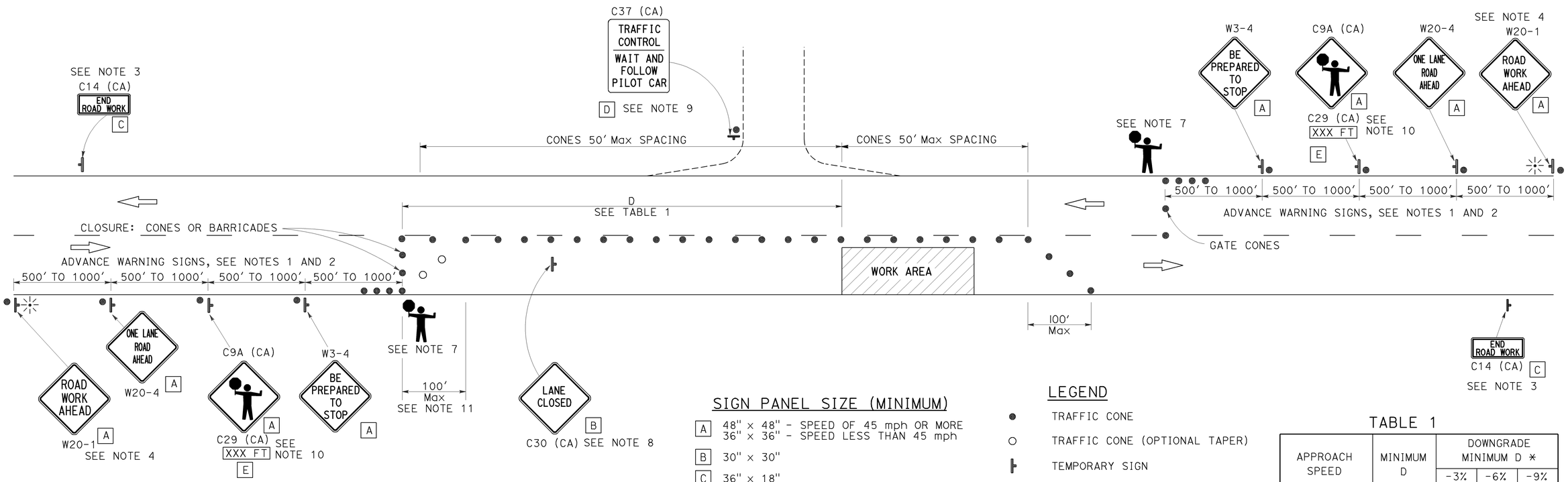

SIGN PANEL SIZE (MINIMUM)

- A: 48" x 48" - SPEED OF 45 mph OR MORE; 36" x 36" - SPEED LESS THAN 45 mph
- B: 30" x 30"
- C: 36" x 18"
- D: 36" x 42"
- E: 36" x 9"

LEGEND

- TRAFFIC CONE
- TRAFFIC CONE (OPTIONAL TAPER)
- TEMPORARY SIGN
- PORTABLE FLASHING BEACON
- FLAGGER

TABLE 1

APPROACH SPEED	MINIMUM D	DOWNGRADE MINIMUM D *		
		-3%	-6%	-9%
mph	ft	ft	ft	ft
25 AND BELOW	155	158	165	173
30	200	205	215	227
35	250	257	271	287
40	305	315	333	354
45	360	378	400	427
50	425	446	474	507
55	495	520	553	593
60	570	598	638	686
65	645	682	728	785

* USE ON SUSTAINED DOWNGRADE STEEPER THAN -3 PERCENT AND LONGER THAN 1 MILE.

NOTES:

1. Where approach speeds are low, advance warning signs may be placed at 300' spacing, and closer in urban areas.
2. Each advance warning sign in each direction of travel shall be equipped with at least two flags for daytime closure. Each flag shall be at least 16" x 16" in size and shall be orange or fluorescent red-orange in color. Flashing beacons shall be placed at the locations indicated for lane closure during hours of darkness.
3. A C14 (CA) "END ROAD WORK" sign, as appropriate, shall be placed at the end of the lane control unless the end of work area is obvious, or ends within a larger project's limits.
4. If the W20-1 sign would follow within 2000' of a stationary W20-1 or C11 (CA) "ROAD WORK NEXT _____MILES", use a W20-4 sign for the first advance warning sign.
5. All cones used for lane closures during the hours of darkness shall be fitted with retroreflective bands (or sleeves) as specified in the specifications.
6. Portable delineators, placed at one-half the spacing indicated for traffic cones, may be used instead of cones for daytime closures only.
7. Additional advance flaggers may be required. Flagger should stand in a conspicuous place, be visible to approaching traffic as well as approaching vehicles after the first vehicle has stopped. During the hours of darkness, the flagging-station and flagger shall be illuminated and clearly visible to approaching traffic. The illumination footprint of the lighting on the ground shall be at least 20' in diameter. Place a minimum of four cones at 50' intervals in advance of flagger station as shown.
8. Place C30 (CA) "LANE CLOSED" sign at 500' to 1000' intervals throughout extended work areas. They are optional if the work area is visible from the flagger station.
9. When a pilot car is used, place a C37 (CA) "TRAFFIC CONTROL-WAIT AND FOLLOW PILOT CAR" sign at all intersections within traffic control area. Signs shall be clean and visible at all times.
10. An optional C29 (CA) sign may be placed below the C9A (CA) sign.
11. Traffic cones or barricades may be placed on the optional taper as shown, barricades shall be Type I, II, or III.

STATE OF CALIFORNIA
DEPARTMENT OF TRANSPORTATION

TRAFFIC CONTROL SYSTEM FOR LANE CLOSURE ON TWO LANE CONVENTIONAL HIGHWAYS

NO SCALE

TCS-3

STATE OF CALIFORNIA - DEPARTMENT OF TRANSPORTATION

Caltrans

FUNCTIONAL SUPERVISOR | CALCULATED-DESIGNED BY | CHECKED BY | REVISED BY | DATE REVISED

LAST REVISION 00-00-00 | DATE PLOTTED => 10-DEC-2012 | TIME PLOTTED => 09:45

TO ACCOMPANY PLANS DATED 12-31-12

Dist	COUNTY	ROUTE	POST MILES TOTAL PROJECT	SHEET No.	TOTAL SHEETS
03	ED	50	51.6/53.2	24	25

REGISTERED CIVIL ENGINEER

October 19, 2012
PLANS APPROVAL DATE

REGISTERED PROFESSIONAL ENGINEER Glenn DeCou No. C34547 Exp. 9-30-13 CIVIL STATE OF CALIFORNIA

THE STATE OF CALIFORNIA OR ITS OFFICERS OR AGENTS SHALL NOT BE RESPONSIBLE FOR THE ACCURACY OR COMPLETENESS OF SCANNED COPIES OF THIS PLAN SHEET.

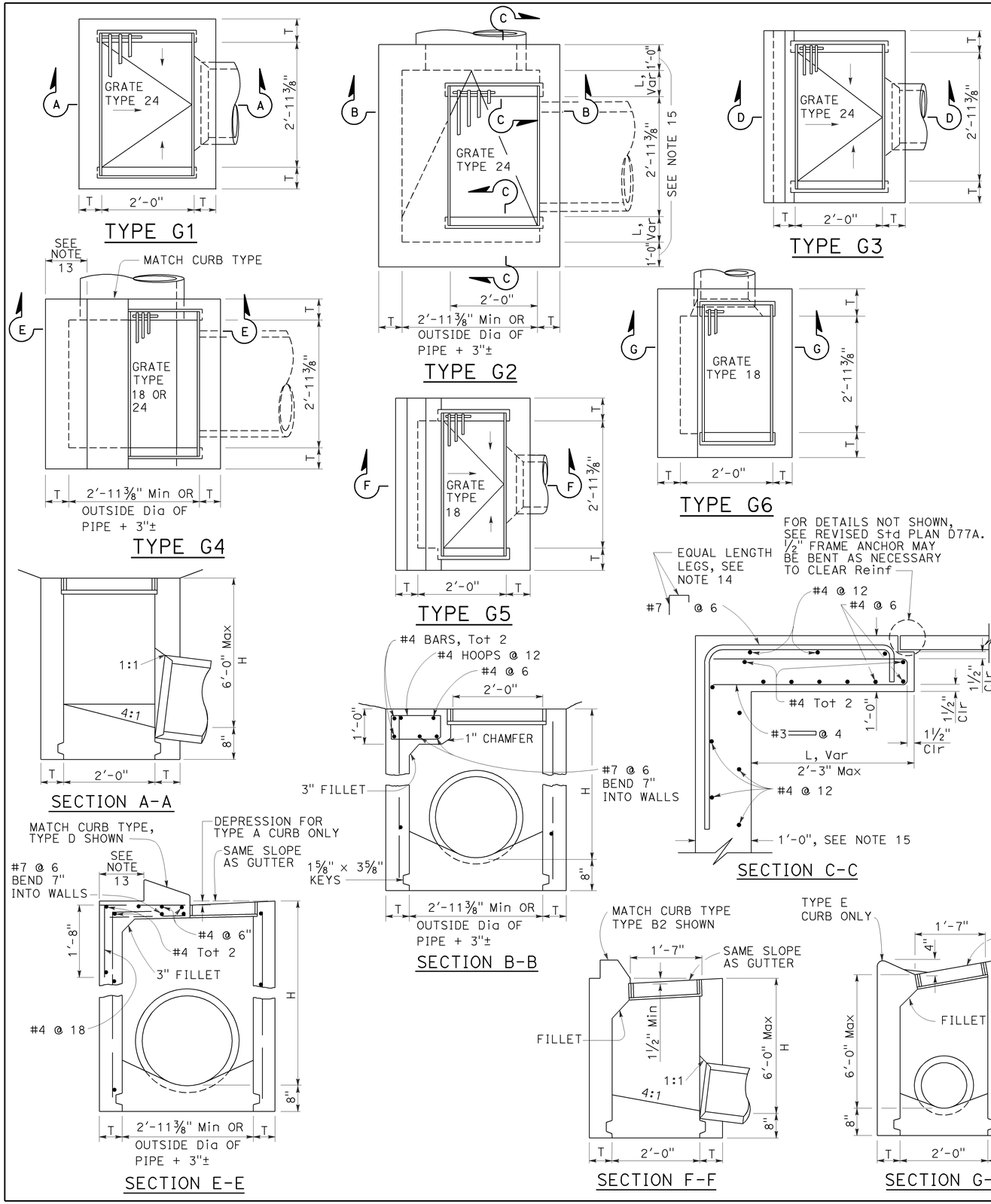

NOTES:

1. "H" is the difference in elevation between the outlet pipe flow line and the normal gutter grade line undepressed.
2. For "T" wall thickness, see Table A below.
3. Wall reinforcing not required when "H" is 8'-0" or less and the unsupported width or length is 7'-0" or less. Walls exceeding these limits shall be reinforced with #4 bars @ 1'-6" ± centers placed 1½" clear to inside of box unless otherwise shown.
4. Inlet bottom reinforcing not required. See Standard Plan D74C for alternative reinforced bottom and alternative half round bottom.
5. Steps-None required where "H" is less than 2'-6". Where "H" is 2'-6" or more, install steps with lowest rung 1'-0" above the floor and highest rung not more than 6" below top of inlet. The distance between steps shall not exceed 1'-0" and shall be uniform throughout the length of the wall. Place steps in the wall without an opening. Steps inserts may be substituted for the bar steps. Step inserts shall comply with State Industrial Safety requirements. See Standard Plan D74C for step details.
6. Details shown apply to both metal and concrete pipe.
7. Pipe(s) can be placed in any wall.
8. Curb section shall match adjacent curb.
9. Basin floors shall have wood trowel finish and a minimum slope of 12:3 from all directions toward outlet pipe.
10. Set inlet so that grate bars are parallel to direction of principal surface flow.
11. See Revised Standard Plans D77A and D77B for grate and frame details and weights of miscellaneous iron and steel.
12. See Standard Plan D78A for gutter depression details.
13. This dimenison will vary with different grates, curbs types, box width and wall thickness.
14. Bar may be rotated as necessary to clear opening. Where "L" is 6" or less, bar may be omitted.
15. Where "L" is 6" or less, wall thickness shall be as shown in Table A.
16. Cast-in-place inlets to be formed around all pipes/stubs intersecting the inlet, and concrete poured in one continuous operation. Precast inlets shall have mortared connections conforming to details for Type GCP Inlet shown on Standard Plan D75B. See Standard Specifications for mortar composition.

TABLE A

CONCRETE QUANTITIES				
TYPE	H=3'-0" TO 8'-0" (T=6")		H=8'-1" TO 20'-0" (T=8")	
	H=3'-0" (CY)	ADDITIONAL PCC PER FOOT (CY)	H=8'-1" (CY)	ADDITIONAL PCC PER FOOT (CY)
G-1	0.95	0.220	See Note A	SEE NOTE A
G-2*	1.31	0.255	3.50	0.357
G-3	1.03	0.220	See Note A	SEE NOTE A
G-4* (TYPE 24)	1.27	0.255	3.48	0.357
G-4* (TYPE 18)	1.30	0.255	3.50	0.357
G-5	1.02	0.220	SEE NOTE A	SEE NOTE A
G-6	1.04	0.220	SEE NOTE A	SEE NOTE A

TABLE BASED ON 8" FLOOR SLAB. NO DEDUCTIONS ARE TO BE MADE TO THESE QUANTITIES BECAUSE OF PIPE OPENINGS, DIFFERENT FLOOR ALTERNATIVES OR DIFFERENT CURB TYPES. * QUANTITIES FOR TYPE G-2 AND G-4 INLETS BASED ON THE MINIMUM INTERIOR DIMENSIONS.

NOTE A:

Maximum allowable height 6'-0".

STATE OF CALIFORNIA
DEPARTMENT OF TRANSPORTATION

DRAINAGE INLETS

NO SCALE

RSP D73 DATED OCTOBER 19, 2012 SUPERSEDES STANDARD PLAN D73 DATED MAY 20, 2011 - PAGE 156 OF THE STANDARD PLANS BOOK DATED 2010.

REVISED STANDARD PLAN RSP D73

2010 REVISED STANDARD PLAN RSP D73

7-19-12

Dist	COUNTY	ROUTE	POST MILES TOTAL PROJECT	SHEET No.	TOTAL SHEETS
03	ED	50	51.6/53.2	25	25

Raymond Don Tsztoo
REGISTERED CIVIL ENGINEER

July 20, 2012
PLANS APPROVAL DATE

REGISTERED PROFESSIONAL ENGINEER Raymond Don Tsztoo No. C37332 Exp. 6-30-14 CIVIL STATE OF CALIFORNIA

THE STATE OF CALIFORNIA OR ITS OFFICERS OR AGENTS SHALL NOT BE RESPONSIBLE FOR THE ACCURACY OR COMPLETENESS OF SCANNED COPIES OF THIS PLAN SHEET.

TO ACCOMPANY PLANS DATED 12-31-12

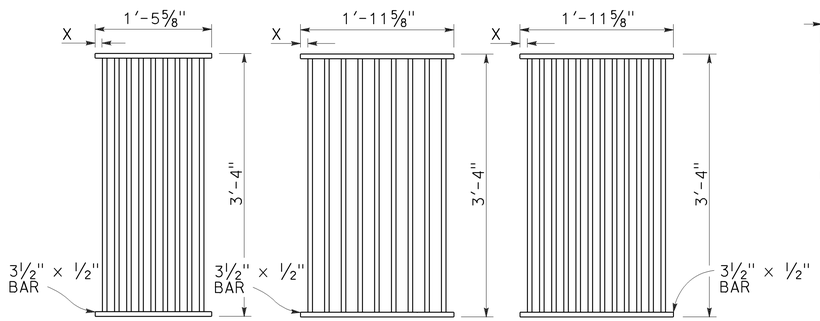

TYPE 18-9

1⅜" Clear spacing. Use within the roadbed on highways where bicycles and pedestrians are excluded.

TYPE 24-9

2" Clear spacing. Use in locations off the roadbed on all types of highways.

TYPE 24-12

1⅜" Clear spacing. Use within the roadbed on highways where bicycles and pedestrians are excluded.

RECTANGULAR GRATE DETAILS

(See table below)

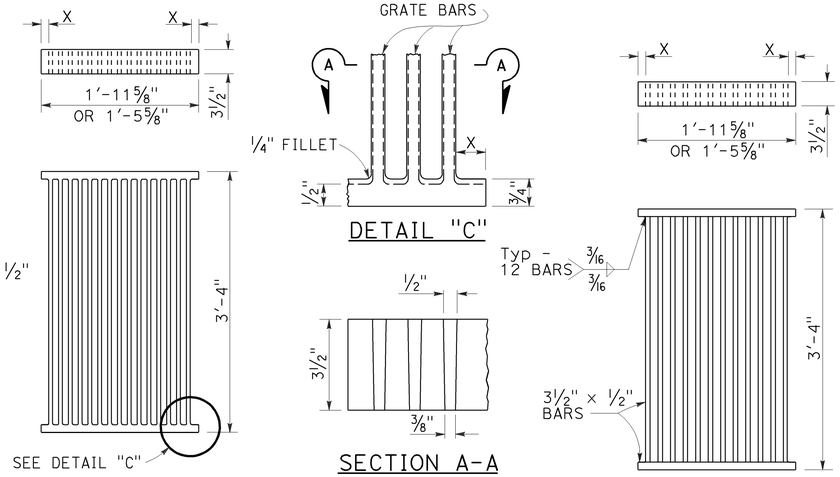

ALTERNATIVE CAST DUCTILE IRON GRATE OR CAST CARBON STEEL GRATE

ALTERNATIVE WELDED GRATE

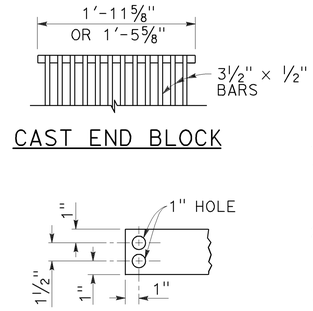

CAST END BLOCK

END OF BAR

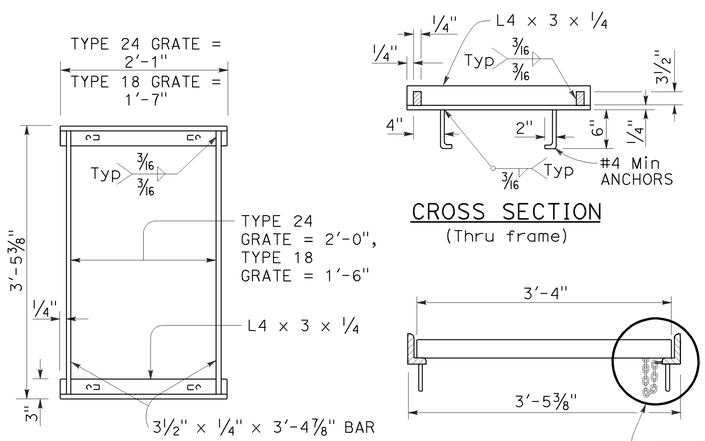

TYPICAL FRAME

CROSS SECTION
(Thru frame)

LONGITUDINAL SECTION
(Thru frame and grate)

RECTANGULAR FRAME DETAILS

(For all rectangular grates)

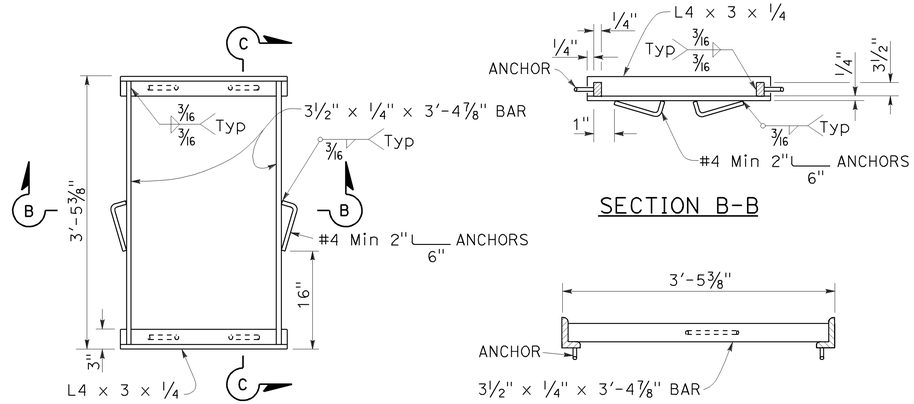

TYPICAL FRAME

SECTION B-B

SECTION C-C

ALTERNATIVE ANCHOR FOR RECTANGULAR FRAME

(For details not shown, See Rectangular Frame Details)

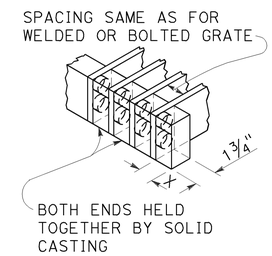

ALTERNATIVE CAST DUCTILE IRON OR CAST CARBON STEEL END BLOCK GRATE

NOTES:

1. Grate type numbers refer to approximate width of grate in inches and number of bars, respectively.
2. Contractor has the option of using cast ductile iron, cast carbon steel, welded, bolted, or cast end block grate.
3. Rounded top of bars optional on all grates.
4. Pipe inlets with a grate shall be placed so that bars parallel direction of principle surface flow.
5. Complete joint penetration butt welds may be substituted for the fillet welds on all anchors.
6. Standard square, hexagon, round or equivalent headed anchors may be substituted for the right angle hooks on the anchors shown on this plan.
7. Grate and frame weights are based on welded grates (weights of face angles, steps, protection bars, etc. are not included).
8. Connect chain to grate and frame only at locations shown on the plans. When chain is required, do not use cast ductile iron grates.

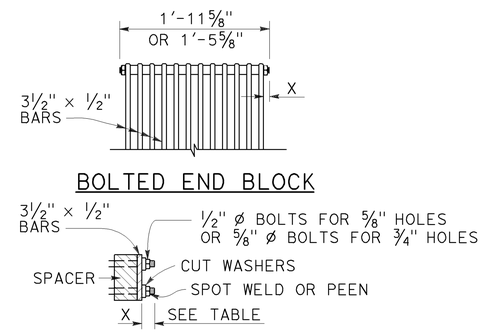

ALTERNATIVE BOLTED GRATE

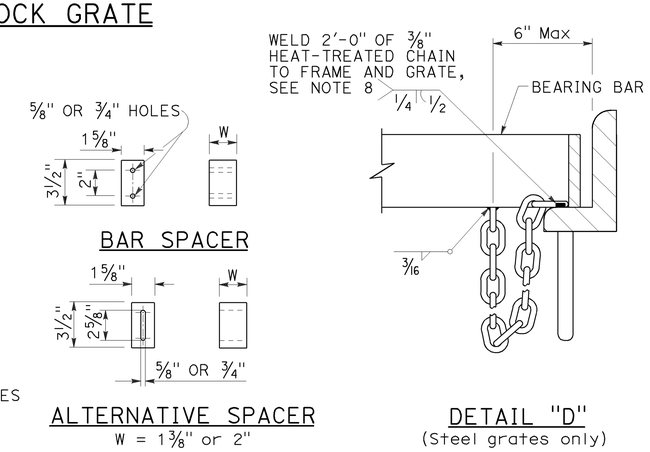

GRATE BAR SPACING TABLE

TYPE	No. OF BARS	CLEAR BAR SPACING	X
18-9	9	1⅜"	1 1/16"
24-9	9	2"	1 9/16"
24-12	12	1⅜"	1¼"

INLET TYPE	COVER TYPE	WEIGHT LB
OS	PLATE	174
OL-7	PLATE	170
OL-10	PLATE	170
OL-14	PLATE	170
OL-21	PLATE	170
OCP	PLATE	112
OCPI	PLATE	112
OCPI	REDWOOD	42
OMP	PLATE	177
OMPI	PLATE	177

INLET TYPE	GRATE TYPE	No. OF GRATES	WEIGHT LB
GDO	24-12	2	634
GOL-7	24-12	1	326
GOL-10	24-12	1	326
GO,G1,G2,G3,G4 (TYPE 24)	24-9	1	263
	24-12	1	326
G4 (TYPE 18),G5,G6	18-9	1	249
GT1	18-9	2	498
GT2	18-9	2	498
GT3	24-12	2	652
GT4	24-12	2	652
TRASH RACK			22
GRATE CHAIN			3

BASIS FOR Misc IRON & STEEL FINAL PAY WEIGHTS FOR DRAINAGE INLETS

(See Note 7)

STATE OF CALIFORNIA
DEPARTMENT OF TRANSPORTATION

GRATE DETAILS

NO SCALE

RSP D77A DATED JULY 20, 2012 SUPERSEDES STANDARD PLAN D77A DATED MAY 20, 2011 - PAGE 164 OF THE STANDARD PLANS BOOK DATED 2010.

REVISED STANDARD PLAN RSP D77A

2010 REVISED STANDARD PLAN RSP D77A

6-13-12