Dist	COUNTY	ROUTE	POST MILES TOTAL PROJECT	SHEET No.	TOTAL SHEETS
03	Col	5	R21.0/R34.4	1	28

INDEX OF PLANS

SHEET No.	DESCRIPTION
1	TITLE AND LOCATION MAP
2	TYPICAL CROSS SECTIONS
3-9	CONSTRUCTION DETAILS
10	CONSTRUCTION AREA SIGNS
11-12	PAVEMENT DELINEATION QUANTITIES
13-15	SUMMARY OF QUANTITIES
16-28	REVISED AND NEW STANDARD PLANS

THE STANDARD PLANS LIST APPLICABLE TO THIS CONTRACT IS INCLUDED IN THE NOTICE TO BIDDERS AND SPECIAL PROVISIONS BOOK.

STATE OF CALIFORNIA

DEPARTMENT OF TRANSPORTATION

PROJECT PLANS FOR CONSTRUCTION ON

STATE HIGHWAY

IN COLUSA COUNTY

NEAR WILLIAMS FROM 1.7 MILES NORTH OF FRESHWATER ROAD OVERCROSSING TO THE GLENN COUNTY LINE

TO BE SUPPLEMENTED BY STANDARD PLANS DATED MAY 2006

LOCATION MAP

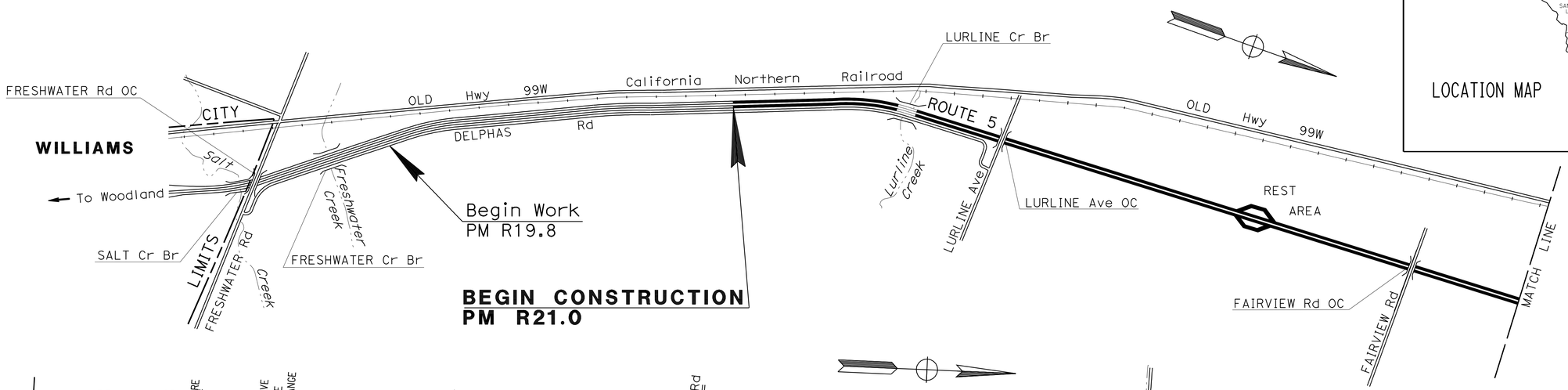

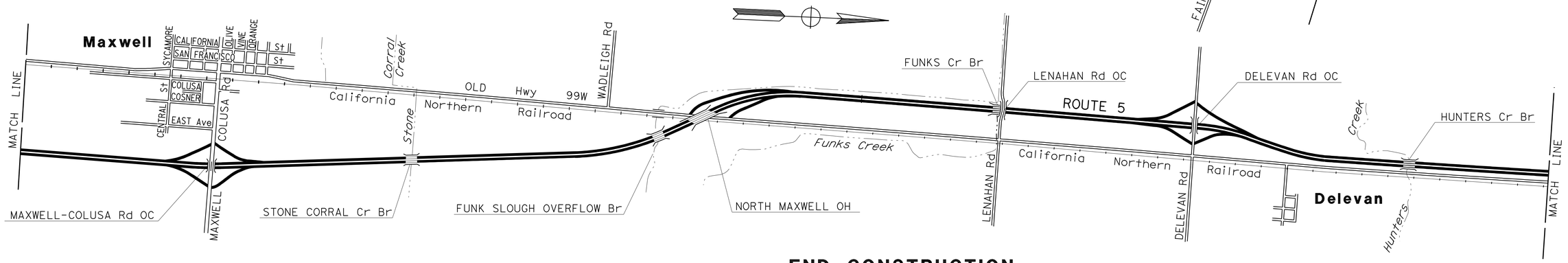

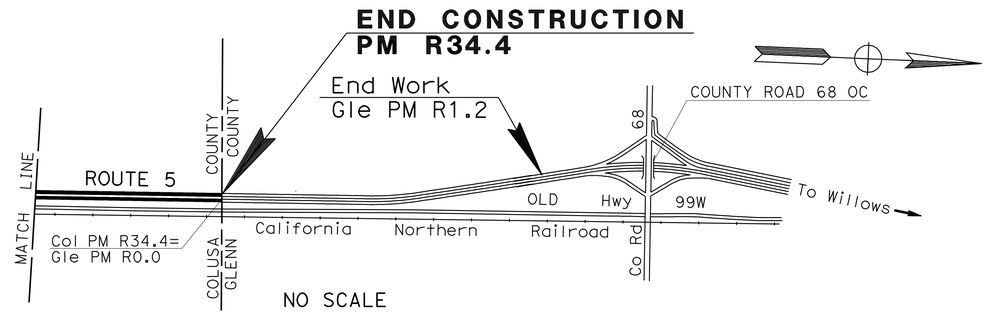

NO SCALE

THE CONTRACTOR SHALL POSSESS THE CLASS (OR CLASSES) OF LICENSE AS SPECIFIED IN THE "NOTICE TO BIDDERS."

PROJECT MANAGER: RONALD S SYKES

DESIGN ENGINEER: MIKE BAUER

PROJECT ENGINEER REGISTERED CIVIL ENGINEER — DATE: 1-25-2012

RONALD S. SYKES No. C35526 Exp. 9-30-13 CIVIL — REGISTERED PROFESSIONAL ENGINEER — STATE OF CALIFORNIA

January 30, 2012
PLANS APPROVAL DATE

THE STATE OF CALIFORNIA OR ITS OFFICERS OR AGENTS SHALL NOT BE RESPONSIBLE FOR THE ACCURACY OR COMPLETENESS OF SCANNED COPIES OF THIS PLAN SHEET.

CONTRACT No.	03-4M1204
PROJECT ID	0300020051

LAST REVISION 06-28-10 — DATE PLOTTED => 03-FEB-2012 — TIME PLOTTED => 14:20

Dist	COUNTY	ROUTE	POST MILES TOTAL PROJECT	SHEET No.	TOTAL SHEETS
03	Col	5	R21.0/R34.4	2	28

REGISTERED CIVIL ENGINEER 1-25-2012 DATE

January 30, 2012
PLANS APPROVAL DATE

REGISTERED PROFESSIONAL ENGINEER RONALD S. SYKES No. C35526 Exp. 9-30-13 CIVIL STATE OF CALIFORNIA

THE STATE OF CALIFORNIA OR ITS OFFICERS OR AGENTS SHALL NOT BE RESPONSIBLE FOR THE ACCURACY OR COMPLETENESS OF SCANNED COPIES OF THIS PLAN SHEET.

NOTES:

1. DIMENSIONS OF THE PAVEMENT STRUCTURES (STRUCTURAL SECTIONS) ARE SUBJECT TO TOLERANCES SPECIFIED IN THE STANDARD SPECIFICATIONS.
2. EXACT LOCATIONS AND TYPES OF DIKES AND GUARD RAILING ARE SHOWN ON THE SUMMARY OF QUANTITIES SHEETS.
3. FOR PAVEMENT TAPER DETAILS, SEE CONSTRUCTION DETAILS SHEETS.
4. EXISTING UTILITY FACILITIES HAVE NOT BEEN PLOTTED ON THESE PLANS.
5. FOR COLD PLANE ASPHALT CONCRETE LOCATIONS, SEE Q-1.
6. FOR SHOULDER BACKING DETAILS, SEE CONSTRUCTION DETAILS SHEETS.

ABBREVIATIONS:

RHMA-O-WMA - RUBBERIZED HOT MIX ASPHALT (OPEN GRADED WMA)
LT - LIME TREATED MATERIAL
WMA - WARM MIX ASPHALT

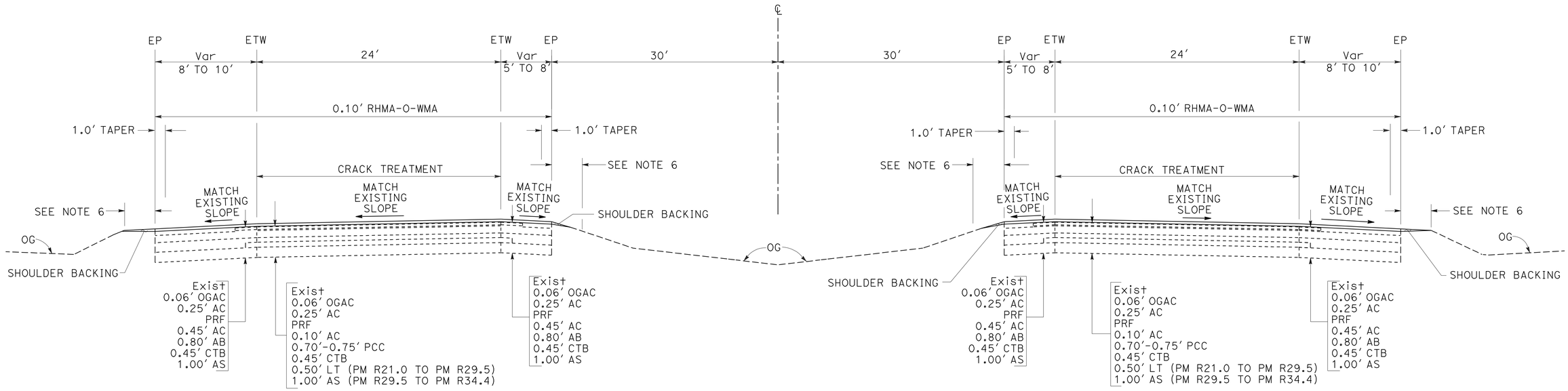

SOUTHBOUND

PM R21.0 TO PM R34.4

ROUTE 5

NORTHBOUND

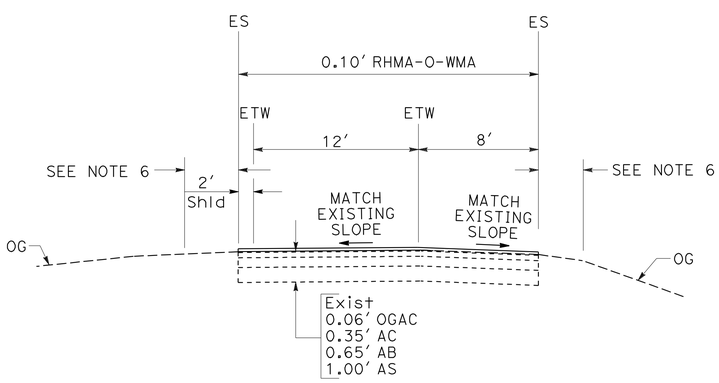

DELEVAN ROAD

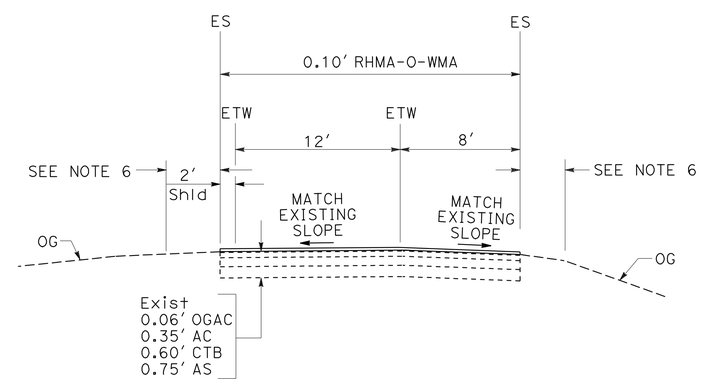

MAXWELL REST AREA
MAXWELL ROAD
NORTH MAXWELL ROAD

RAMPS

TYPICAL CROSS SECTIONS

NO SCALE

X-1

STATE OF CALIFORNIA - DEPARTMENT OF TRANSPORTATION
Caltrans®
MAINTENANCE DESIGN
FUNCTIONAL SUPERVISOR: RONALD S. SYKES
CALCULATED-DESIGNED BY: ROBERT M. FLOYD II
CHECKED BY: REX P. HERVEY
REVISED BY
DATE REVISED

LAST REVISION 00-00-00
DATE PLOTTED => 02-FEB-2012
TIME PLOTTED => 14:19

Dist	COUNTY	ROUTE	POST MILES TOTAL PROJECT	SHEET No.	TOTAL SHEETS
03	Col	5	R21.0/R34.4	3	28

REGISTERED CIVIL ENGINEER 1-25-2012 DATE

January 30, 2012
PLANS APPROVAL DATE

REGISTERED PROFESSIONAL ENGINEER RONALD S. SYKES No. C35526 Exp. 9-30-13 CIVIL STATE OF CALIFORNIA

THE STATE OF CALIFORNIA OR ITS OFFICERS OR AGENTS SHALL NOT BE RESPONSIBLE FOR THE ACCURACY OR COMPLETENESS OF SCANNED COPIES OF THIS PLAN SHEET.

NOTES:

1. EXISTING UTILITY FACILITIES HAVE NOT BEEN PLOTTED ON THESE PLANS.
2. FOR SECTIONS A-A AND B-B SEE SHEET C-3 AND C-4.

ABBREVIATIONS:

RWMA-O-WMA - RUBBERIZED HOT MIX ASPHALT (OPEN GRADED WMA)

LT - LIME TREATED MATERIAL

WMA - WARM MIX ASPHALT

LEGEND:

COLD PLANE AC Pvmt

HMA (TYPE A)

RHMA-O-WMA

DIRECTION OF TRAFFIC

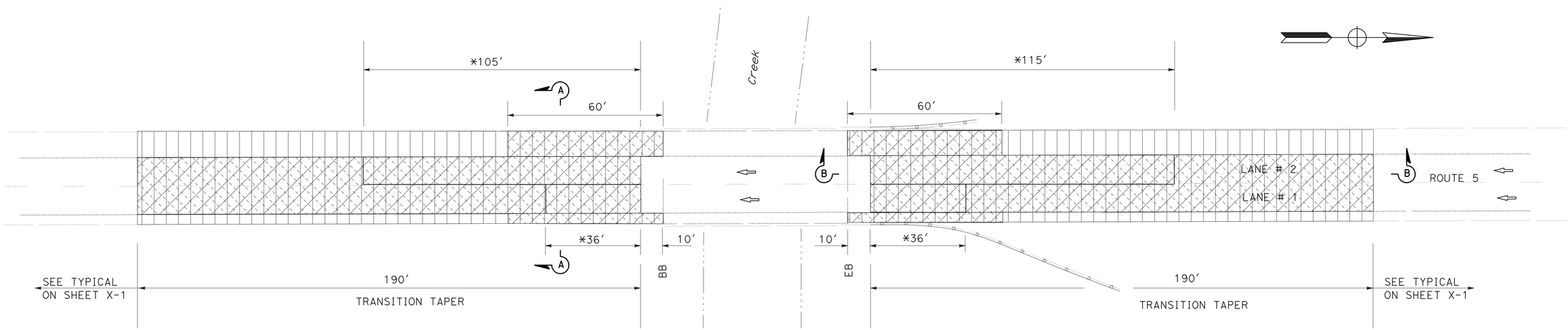

SOUTHBOUND

LURLINE CREEK, Br No. 15-0072 L
STONE CORRAL CREEK, Br No. 15-0069 L

NOTE: * - LENGTH OF REMOVE CONCRETE PAVEMENT (SEE SHEET C-3 FOR DETAILS)

CONSTRUCTION DETAILS

NO SCALE

C-1

STATE OF CALIFORNIA - DEPARTMENT OF TRANSPORTATION
MAINTENANCE DESIGN

FUNCTIONAL SUPERVISOR: RONALD S. SYKES
CALCULATED-DESIGNED BY: ROBERT M. FLOYD II
CHECKED BY: REX P. HERVEY
REVISED BY
DATE REVISED

LAST REVISION 00-00-00
DATE PLOTTED => 02-FEB-2012
TIME PLOTTED => 14:19

Dist	COUNTY	ROUTE	POST MILES TOTAL PROJECT	SHEET No.	TOTAL SHEETS
03	Col	5	R21.0/R34.4	4	28

REGISTERED CIVIL ENGINEER — DATE 1-25-2012

January 30, 2012
PLANS APPROVAL DATE

REGISTERED PROFESSIONAL ENGINEER — RONALD S. SYKES — No. C35526 — Exp. 9-30-13 — CIVIL — STATE OF CALIFORNIA

THE STATE OF CALIFORNIA OR ITS OFFICERS OR AGENTS SHALL NOT BE RESPONSIBLE FOR THE ACCURACY OR COMPLETENESS OF SCANNED COPIES OF THIS PLAN SHEET.

NOTES:

1. EXISTING UTILITY FACILITIES HAVE NOT BEEN PLOTTED ON THESE PLANS.
2. FOR SECTIONS A-A AND B-B SEE SHEET C-3 AND C-4.

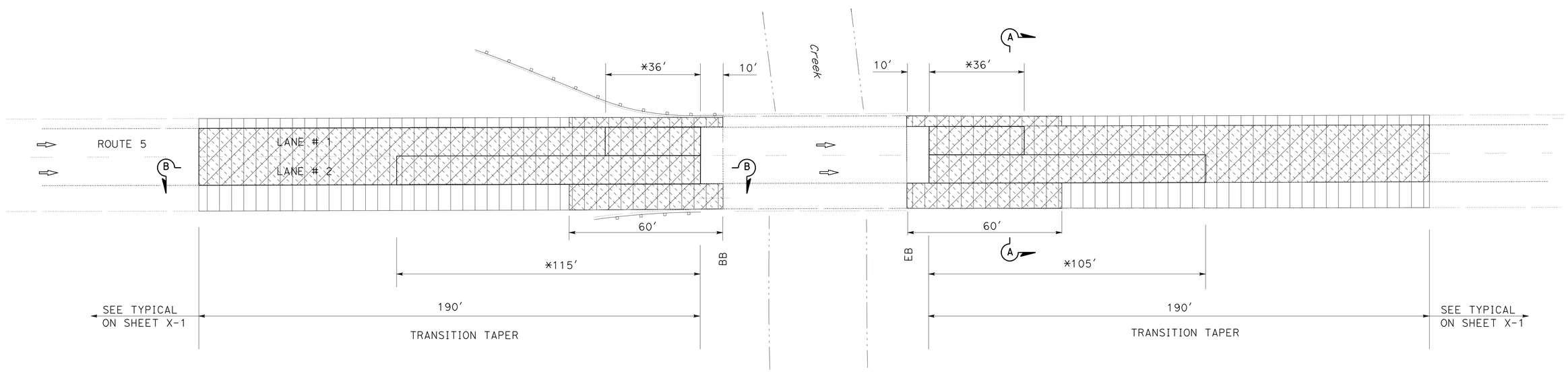

NORTHBOUND

LURLINE CREEK, Br No. 15-0072 R
STONE CORRAL CREEK, Br No. 15-0069 R

NOTE: * - LENGTH OF REMOVE CONCRETE PAVEMENT
(SEE SHEET C-3 FOR DETAILS)

CONSTRUCTION DETAILS

NO SCALE

C-2

STATE OF CALIFORNIA - DEPARTMENT OF TRANSPORTATION
Caltrans
MAINTENANCE DESIGN

FUNCTIONAL SUPERVISOR: RONALD S. SYKES
CALCULATED-DESIGNED BY: ROBERT M. FLOYD II
CHECKED BY: REX P. HERVEY
REVISED BY
DATE REVISED

LAST REVISION 00-00-00
DATE PLOTTED => 02-FEB-2012
TIME PLOTTED => 14:19

Dist	COUNTY	ROUTE	POST MILES TOTAL PROJECT	SHEET No.	TOTAL SHEETS
03	Col	5	R21.0/R34.4	5	28

REGISTERED CIVIL ENGINEER 1-25-2012 DATE

January 30, 2012
PLANS APPROVAL DATE

REGISTERED PROFESSIONAL ENGINEER RONALD S. SYKES No. C35526 Exp. 9-30-13 CIVIL STATE OF CALIFORNIA

THE STATE OF CALIFORNIA OR ITS OFFICERS OR AGENTS SHALL NOT BE RESPONSIBLE FOR THE ACCURACY OR COMPLETENESS OF SCANNED COPIES OF THIS PLAN SHEET.

NOTE:

EXISTING UTILITY FACILITIES HAVE NOT BEEN PLOTTED ON THESE PLANS.

LEGEND:

- REMOVE CONCRETE PAVEMENT
- COLD PLANE AC Pvmt
- HMA (TYPE A)
- RHMA-O-WMA

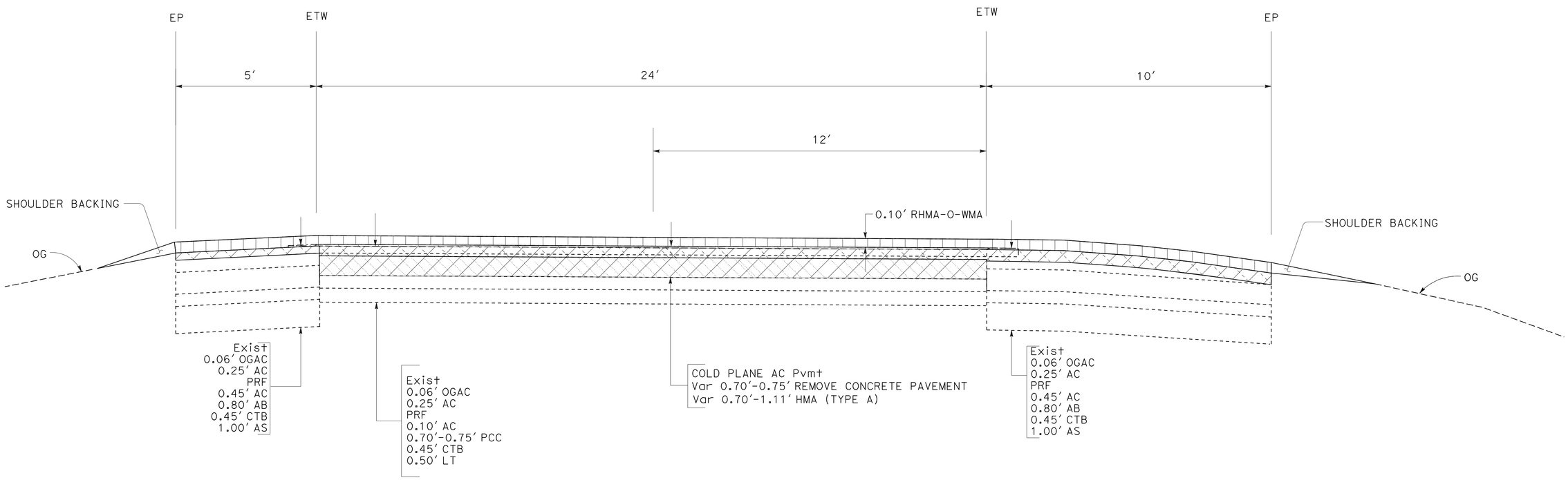

SECTION A-A

CONSTRUCTION DETAILS

NO SCALE

C-3

STATE OF CALIFORNIA - DEPARTMENT OF TRANSPORTATION
Caltrans
MAINTENANCE DESIGN

FUNCTIONAL SUPERVISOR: RONALD S. SYKES

CALCULATED-DESIGNED BY: ROBERT M. FLOYD II
CHECKED BY: REX P. HERVEY

REVISED BY | DATE REVISED

LAST REVISION 00-00-00 | DATE PLOTTED => 02-FEB-2012 | TIME PLOTTED => 14:19

Dist	COUNTY	ROUTE	POST MILES TOTAL PROJECT	SHEET No.	TOTAL SHEETS
03	Col	5	R21.0/R34.4	6	28

REGISTERED CIVIL ENGINEER — DATE 1-25-2012

January 30, 2012
PLANS APPROVAL DATE

REGISTERED PROFESSIONAL ENGINEER — RONALD S. SYKES — No. C35526 — Exp. 9-30-13 — CIVIL — STATE OF CALIFORNIA

THE STATE OF CALIFORNIA OR ITS OFFICERS OR AGENTS SHALL NOT BE RESPONSIBLE FOR THE ACCURACY OR COMPLETENESS OF SCANNED COPIES OF THIS PLAN SHEET.

NOTE:

EXISTING UTILITY FACILITIES HAVE NOT BEEN PLOTTED ON THESE PLANS.

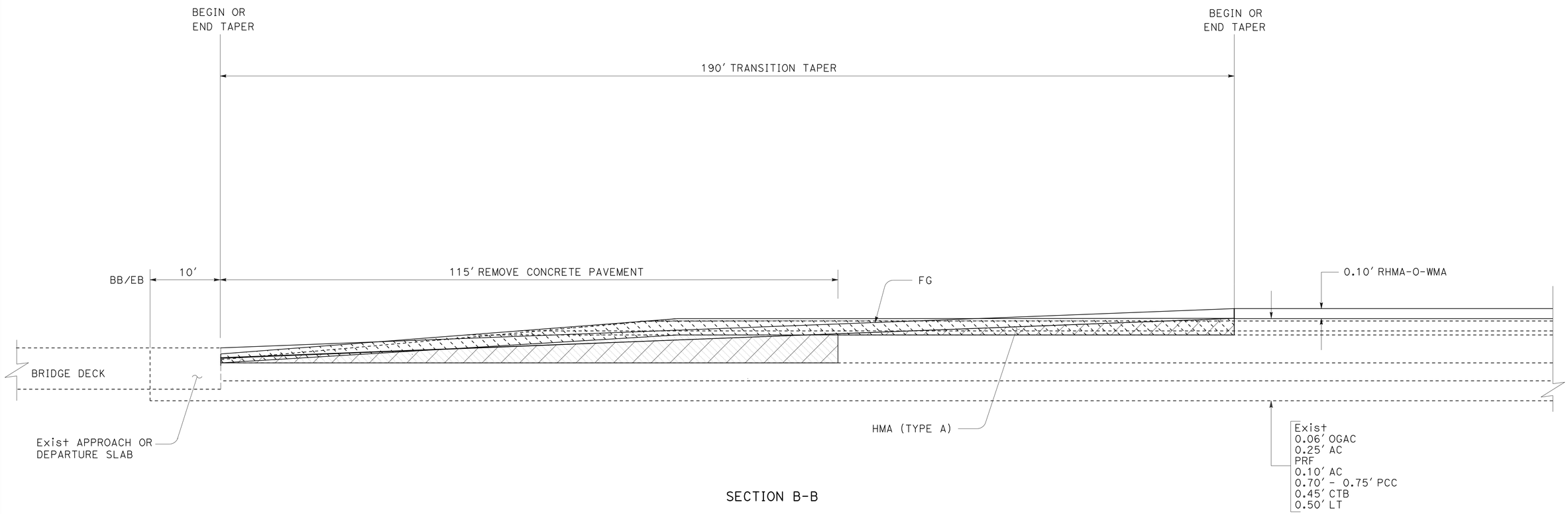

SECTION B-B

CONSTRUCTION DETAILS

NO SCALE

C-4

STATE OF CALIFORNIA - DEPARTMENT OF TRANSPORTATION
Caltrans
MAINTENANCE DESIGN

FUNCTIONAL SUPERVISOR: RONALD S. SYKES

CALCULATED-DESIGNED BY: ROBERT M. FLOYD II
CHECKED BY: REX P. HERVEY

REVISED BY
DATE REVISED

LAST REVISION 00-00-00
DATE PLOTTED => 02-FEB-2012
TIME PLOTTED => 14:19

Dist	COUNTY	ROUTE	POST MILES TOTAL PROJECT	SHEET No.	TOTAL SHEETS
03	Col	5	R21.0/R34.4	7	28

REGISTERED CIVIL ENGINEER 1-25-2012 DATE

January 30, 2012
PLANS APPROVAL DATE

REGISTERED PROFESSIONAL ENGINEER RONALD S. SYKES No. C35526 Exp. 9-30-13 CIVIL STATE OF CALIFORNIA

THE STATE OF CALIFORNIA OR ITS OFFICERS OR AGENTS SHALL NOT BE RESPONSIBLE FOR THE ACCURACY OR COMPLETENESS OF SCANNED COPIES OF THIS PLAN SHEET.

NOTE:

EXISTING UTILITY FACILITIES HAVE NOT BEEN PLOTTED ON THESE PLANS.

LEGEND:

COLD PLANE AC Pvmt

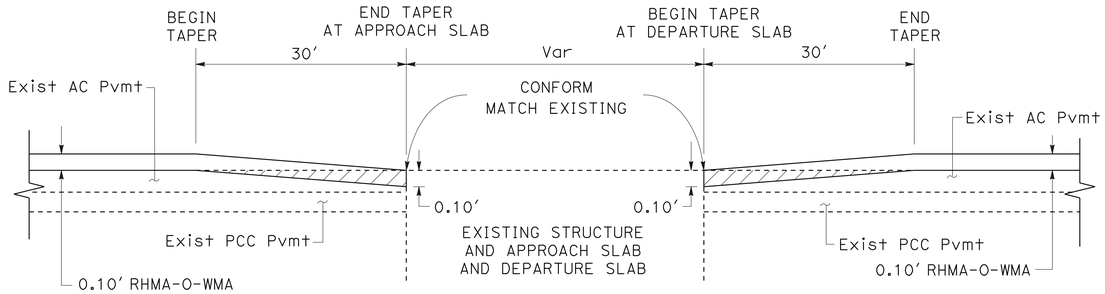

FUNK SLOUGH OVERFLOW, Br No. 15-0077 R/L
NORTH MAXWELL OH, Br No. 15-0065 R/L
FUNKS CREEK, Br No. 15-0056 R/L
HUNTERS CREEK, Br No. 15-0015 R/L

PAVING CONFORM AT BRIDGE STRUCTURES

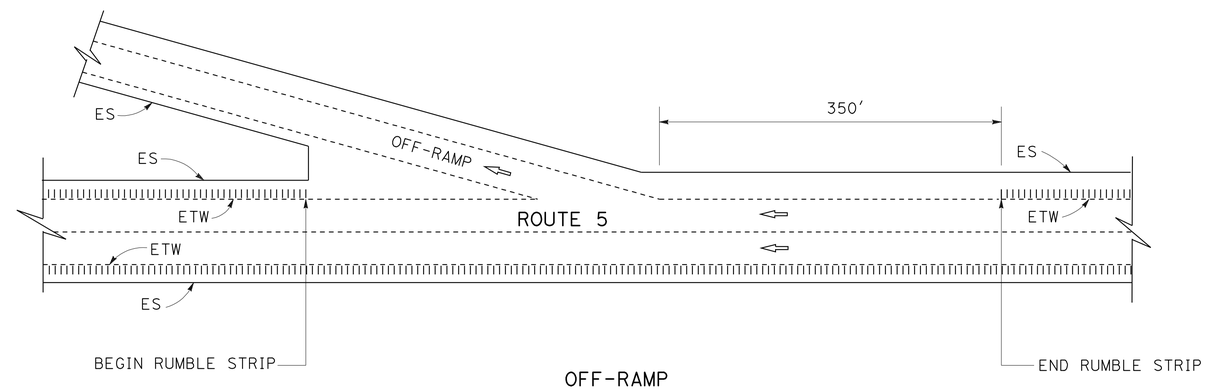

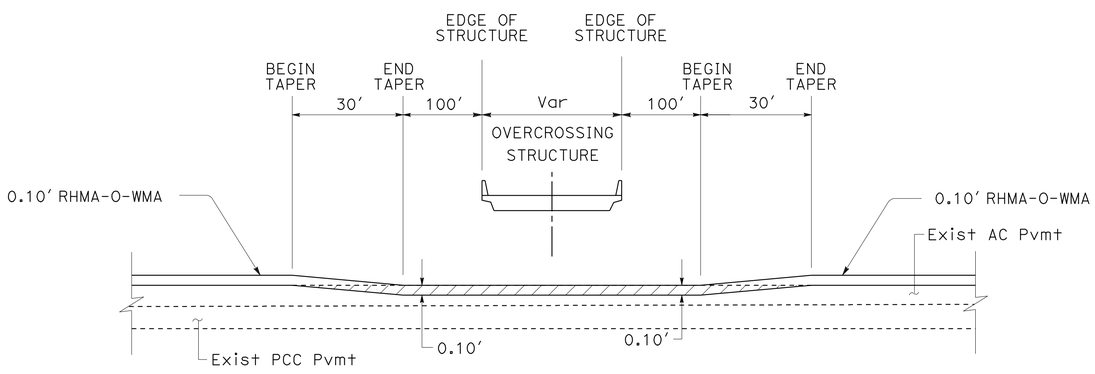

PROFILE

LURLINE AVENUE OC, Br No. 15-0075
FAIRVIEW ROAD OC, Br No. 15-0076
MAXWELL-COLUSA ROAD OC, Br No. 15-0070
LENAHAN ROAD OC, Br No. 15-0057
DELEVAN ROAD OC, Br No. 15-0058

PAVING CONFORM AT OVERCROSSING STRUCTURES

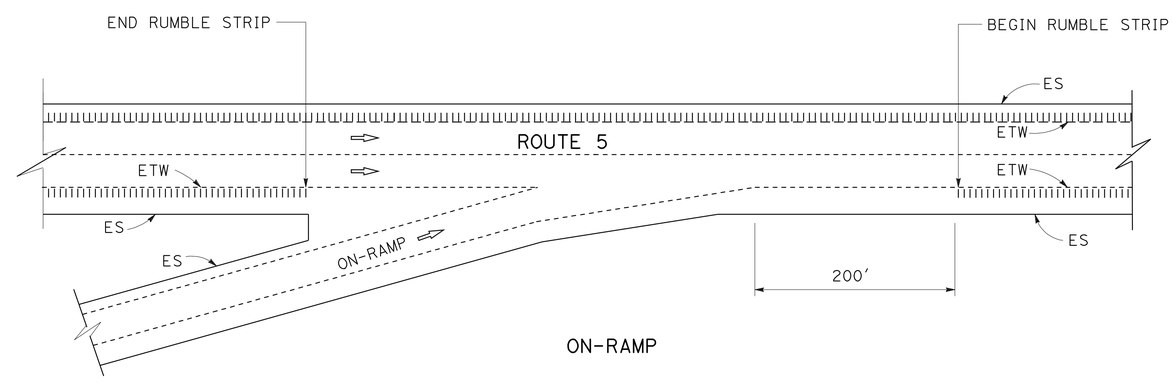

RUMBLE STRIP DETAIL AT RAMPS

CONSTRUCTION DETAILS

NO SCALE

C-5

STATE OF CALIFORNIA - DEPARTMENT OF TRANSPORTATION
Caltrans MAINTENANCE DESIGN

FUNCTIONAL SUPERVISOR: RONALD S. SYKES
CALCULATED-DESIGNED BY: ROBERT M. FLOYD II
CHECKED BY: REX P. HERVEY
REVISED BY
DATE REVISED

LAST REVISION 00-00-00
DATE PLOTTED => 02-FEB-2012
TIME PLOTTED => 14:19

Dist	COUNTY	ROUTE	POST MILES TOTAL PROJECT	SHEET No.	TOTAL SHEETS
03	Col	5	R21.0/R34.4	8	28

REGISTERED CIVIL ENGINEER 1-25-2012 DATE

January 30, 2012
PLANS APPROVAL DATE

REGISTERED PROFESSIONAL ENGINEER RONALD S. SYKES No. C35526 Exp. 9-30-13 CIVIL STATE OF CALIFORNIA

THE STATE OF CALIFORNIA OR ITS OFFICERS OR AGENTS SHALL NOT BE RESPONSIBLE FOR THE ACCURACY OR COMPLETENESS OF SCANNED COPIES OF THIS PLAN SHEET.

NOTES:

1. ADJUST PER STANDARD PLANS RSP A77A1 AND RSP A77C4.
2. REFER TO SHEET Q-2 FOR LOCATIONS.
3. EXISTING UTILITY FACILITIES HAVE NOT BEEN PLOTTED ON THESE PLANS.
4. REFER TO STANDARD PLANS RSP A77C3.

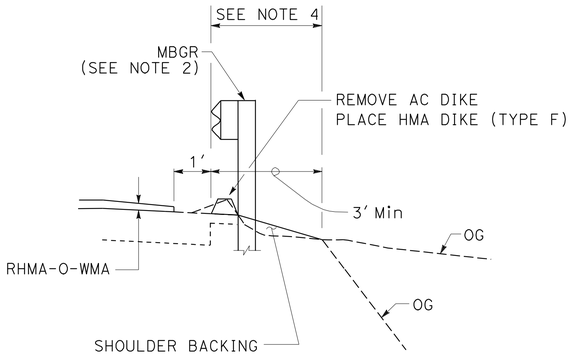

MBGR TYPICAL DETAIL

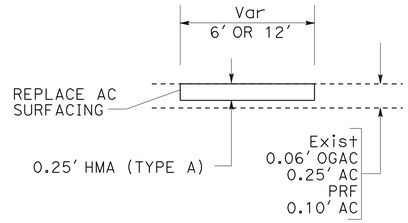

REPLACE ASPHALT CONCRETE SURFACING

RAMPS
TRAVELED WAY - SECTION VIEW

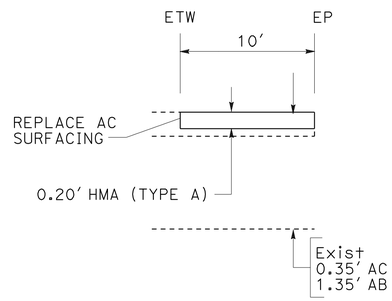

REPLACE ASPHALT CONCRETE SURFACING

MAINLINE
NORTHBOUND - Rt SHOULDER - SECTION VIEW
PM 29.33-29.52

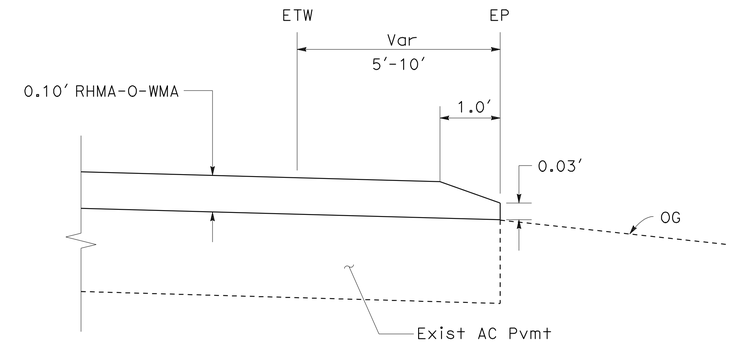

RHMA-O-WMA CONFORM AT MAINLINE EP

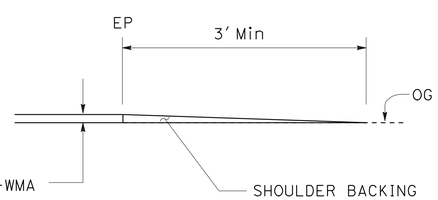

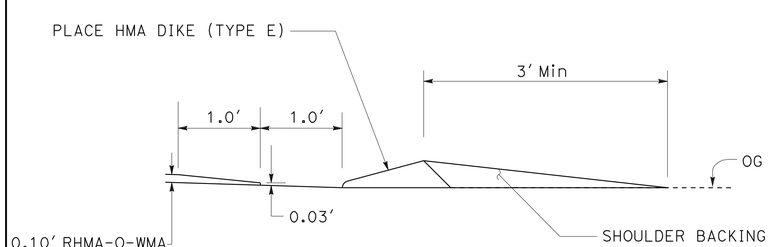

SHOULDER BACKING

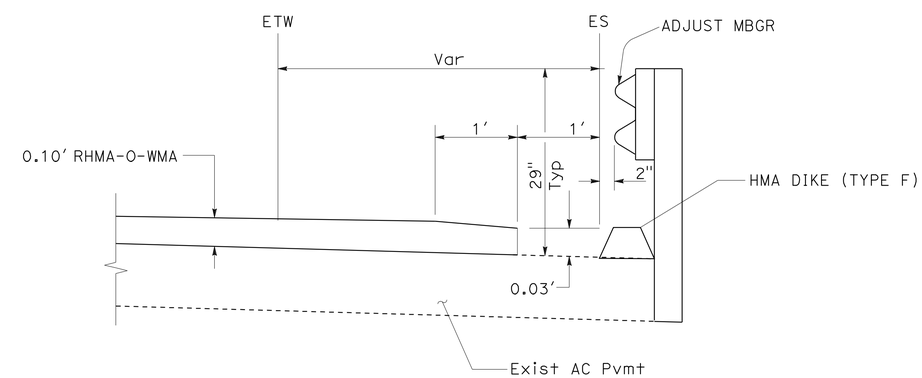

OVERLAY EDGE PAVING AT MBGR

(SEE NOTES 1 AND 2)

CONSTRUCTION DETAILS

NO SCALE

C-6

STATE OF CALIFORNIA - DEPARTMENT OF TRANSPORTATION
MAINTENANCE DESIGN
FUNCTIONAL SUPERVISOR: RONALD S. SYKES
CALCULATED-DESIGNED BY: ROBERT M. FLOYD II
CHECKED BY: REX P. HERVEY
REVISED BY / DATE REVISED

LAST REVISION 00-00-00
DATE PLOTTED => 02-FEB-2012
TIME PLOTTED => 14:19

Dist	COUNTY	ROUTE	POST MILES TOTAL PROJECT	SHEET No.	TOTAL SHEETS
03	Col	5	R21.0/R34.4	9	28

REGISTERED CIVIL ENGINEER 1-25-2012 DATE

January 30, 2012
PLANS APPROVAL DATE

REGISTERED PROFESSIONAL ENGINEER RONALD S. SYKES No. C35526 Exp. 9-30-13 CIVIL STATE OF CALIFORNIA

THE STATE OF CALIFORNIA OR ITS OFFICERS OR AGENTS SHALL NOT BE RESPONSIBLE FOR THE ACCURACY OR COMPLETENESS OF SCANNED COPIES OF THIS PLAN SHEET.

NOTES:

1. EXISTING UTILITY FACILITIES HAVE NOT BEEN PLOTTED ON THESE PLANS.
2. EXACT CONFORM LIMITS TO BE DETERMINED BY THE ENGINEER.
3. * - DISTANCE FROM GORE TO CONFORM.

LEGEND:

COLD PLANE AC Pvmt

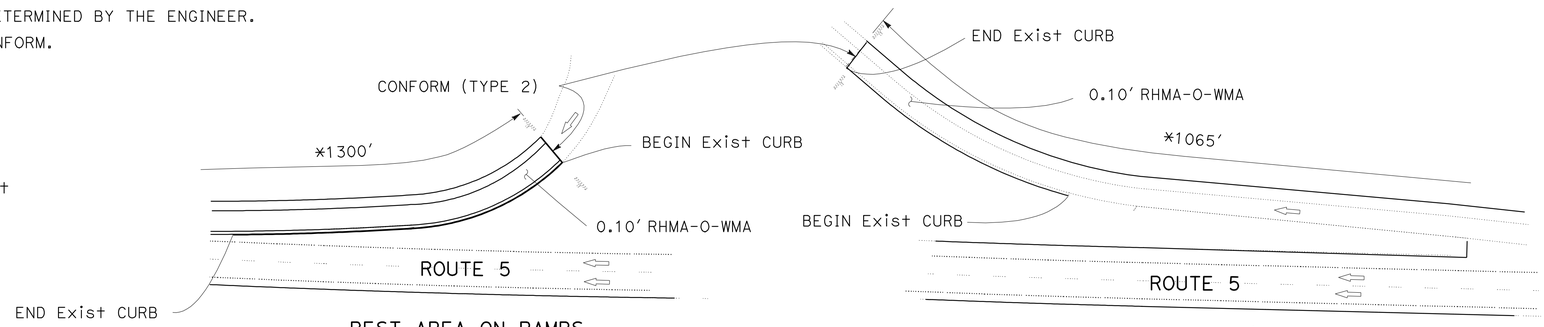

REST AREA ON RAMPS
NB AND SB

REST AREA OFF RAMPS (EXIT 583)
NB AND SB

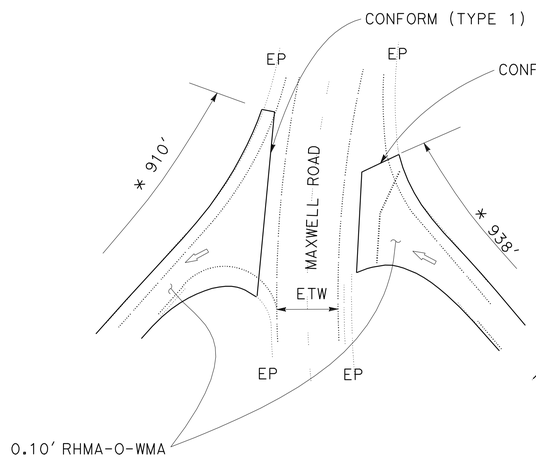

ON AND OFF RAMPS (EXIT 586)
NB AND SB
MAXWELL ROAD

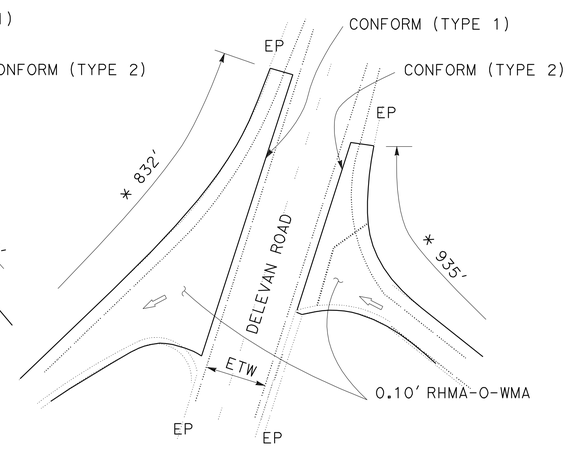

ON AND OFF RAMPS (EXIT 591)
NB AND SB
DELEVAN ROAD

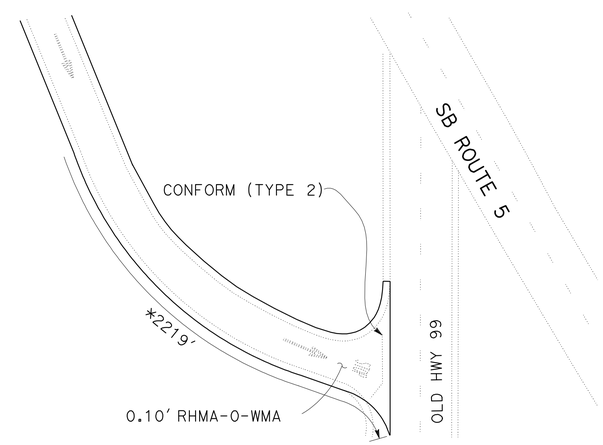

SB OFF RAMP
NORTH MAXWELL OH (EXIT 588)

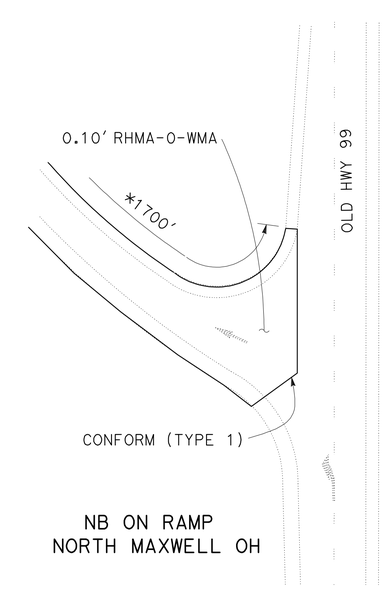

NB ON RAMP
NORTH MAXWELL OH

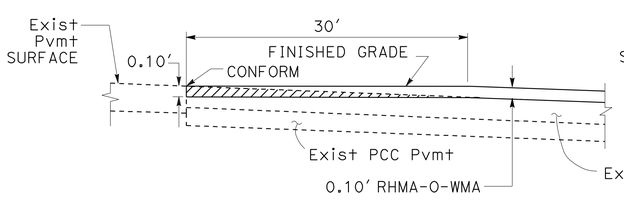

BEGIN AND END CONSTRUCTION
CONFORM MAINLINE - PROFILE

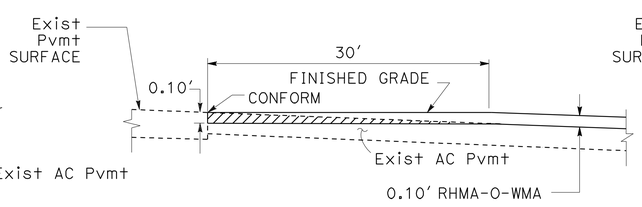

CONFORM (TYPE 1) - PROFILE

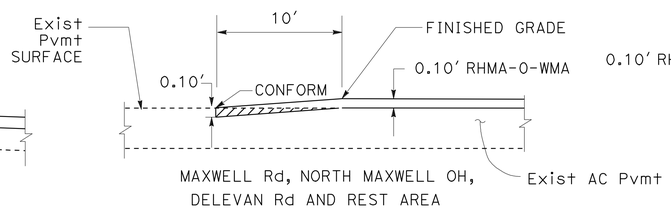

CONFORM (TYPE 2) - PROFILE

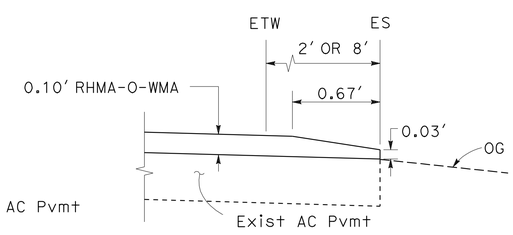

RHMA-O-WMA CONFORM AT ES
AT ON AND OFF RAMPS

PAVEMENT TAPERS

CONSTRUCTION DETAILS

NO SCALE

C-7

STATE OF CALIFORNIA - DEPARTMENT OF TRANSPORTATION
MAINTENANCE DESIGN

FUNCTIONAL SUPERVISOR: RONALD S. SYKES
CALCULATED-DESIGNED BY: ROBERT M. FLOYD II
CHECKED BY: REX P. HERVEY
REVISED BY / DATE REVISED

LAST REVISION 00-00-00
DATE PLOTTED => 02-FEB-2012
TIME PLOTTED => 14:19

Dist	COUNTY	ROUTE	POST MILES TOTAL PROJECT	SHEET No.	TOTAL SHEETS
03	Col	5	R21.0/R34.4	10	28

REGISTERED CIVIL ENGINEER 1-25-2012 DATE

January 30, 2012
PLANS APPROVAL DATE

REGISTERED PROFESSIONAL ENGINEER RONALD S. SYKES No. C35526 Exp. 9-30-13 CIVIL STATE OF CALIFORNIA

THE STATE OF CALIFORNIA OR ITS OFFICERS OR AGENTS SHALL NOT BE RESPONSIBLE FOR THE ACCURACY OR COMPLETENESS OF SCANNED COPIES OF THIS PLAN SHEET.

STATIONARY MOUNTED CONSTRUCTION AREA SIGNS

SIGN LETTER	SIGN CODE FEDERAL	SIGN CODE CALIFORNIA	PANEL SIZE	SIGN MESSAGE	NUMBER OF POST AND SIZE	NUMBER OF SIGNS
A	W20-1	C23	48" x 48"	ROAD WORK AHEAD	1 - 6" x 6"	6
B	G20-2	C14	36" x 18"	END ROAD WORK	1 - 4" x 4"	6
C		C14	48" x 24"	END ROAD WORK	1 - 4" x 6"	2
D	G20-1[Spec](14)		84" x 42"	ROAD WORK NEXT 14 MILES	2 - 4" x 6"	4
E		C40(Mod)	96" x 60"	TRAFFIC FINES DOUBLED IN WORK ZONES	2 - 6" x 6"	2

NOTE: EXACT SIGN LOCATIONS TO BE DETERMINED BY THE ENGINEER.

SIGN DETAILS

(D) G20-1[Spec](14)

ROAD WORK
NEXT 14 MILES

8" C SERIES LETTERS

84"x42"

RETROREFLECTIVE ORANGE BACKGROUND WITH BLACK LEGEND AND BORDER.

(E) C40(Mod)<CA>

TRAFFIC FINES
DOUBLED IN
WORK ZONES

8" D SERIES LETTERS

96"x60"

RETROREFLECTIVE WHITE BACKGROUND WITH BLACK LEGEND AND BORDER.

LEGEND:

(X) CONSTRUCTION AREA SIGN LETTER

SIGN - SINGLE POST

SIGN - TWO POSTS

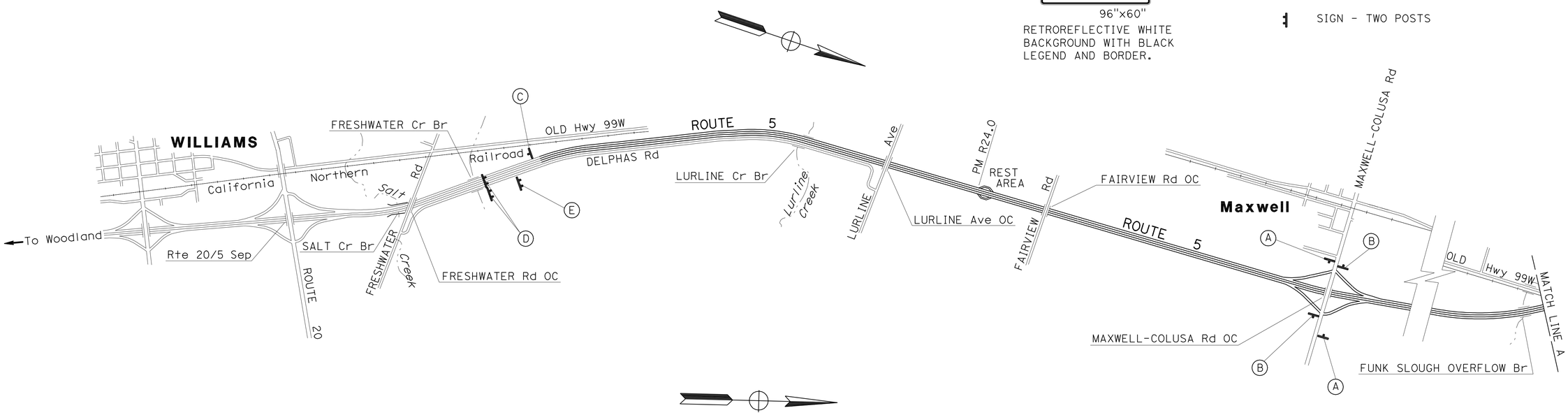

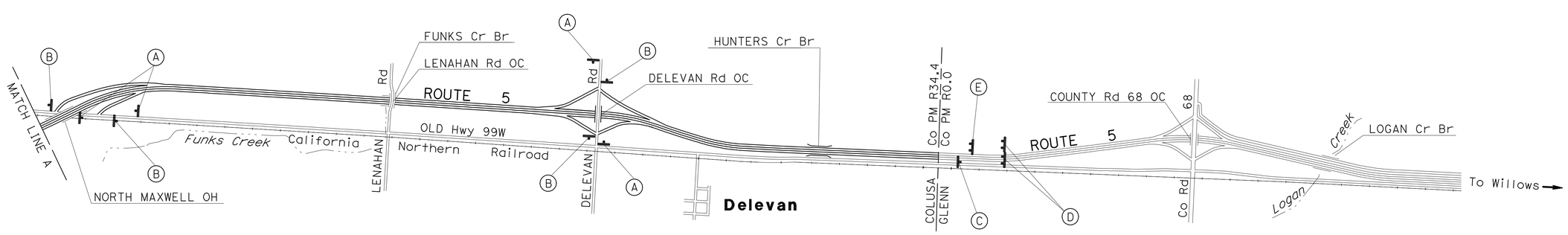

APPROVED FOR CONSTRUCTION AREA SIGN WORK ONLY

CONSTRUCTION AREA SIGNS

NO SCALE

CS-1

STATE OF CALIFORNIA - DEPARTMENT OF TRANSPORTATION
MAINTENANCE DESIGN

FUNCTIONAL SUPERVISOR: RONALD S. SYKES
CALCULATED-DESIGNED BY: ROBERT M. FLOYD II
CHECKED BY: REX P. HERVEY
REVISED BY
DATE REVISED

LAST REVISION 00-00-00
DATE PLOTTED => 02-FEB-2012
TIME PLOTTED => 14:19

Dist	COUNTY	ROUTE	POST MILES TOTAL PROJECT	SHEET No.	TOTAL SHEETS
03	Col	5	R21.0/R34.4	11	28

REGISTERED CIVIL ENGINEER 1-00-2012 DATE

January 30, 2012
PLANS APPROVAL DATE

REGISTERED PROFESSIONAL ENGINEER Jeffrey S Jewett No. 49233 Exp. 9-30-12 CIVIL STATE OF CALIFORNIA

THE STATE OF CALIFORNIA OR ITS OFFICERS OR AGENTS SHALL NOT BE RESPONSIBLE FOR THE ACCURACY OR COMPLETENESS OF SCANNED COPIES OF THIS PLAN SHEET.

THERMOPLASTIC PAVEMENT MARKING

LOCATION	DETAIL NUMBER	4" THERMOPLASTIC TRAFFIC STRIPE			8" THERMOPLASTIC TRAFFIC STRIPE		4" THERMOPLASTIC TRAFFIC STRIPE (BROKEN 17 - 7)	4" THERMOPLASTIC TRAFFIC STRIPE (BROKEN 36 - 12)		PAVEMENT MARKER (RETROREFLECTIVE)		
		DETAIL NUMBER			DETAIL NUMBER		DETAIL NUMBER	DETAIL NUMBER				
		25	25A	27B	36	36A	9	12	14A	TYPE C	TYPE G	TYPE H
		LF	LF	LF	LF	LF	LF	LF	LF	EA	EA	EA
NB MAINLINE	9,12,14A,25, 27B,36,36A	70,625		71,794	1,520	1,169	883	69,329	1,296	36	1,581	1,473
SB MAINLINE	9,12,14A,25, 27B,36,36A	69,854		70,594	1,904	740	750	68,558	1,296	36	1,560	1,457
NB OFF RAMP (EXIT 583) TO MAXWELL REST AREA	25A,27B		679	679								30
NB ON RAMP FROM MAXWELL REST AREA	25A,27B		476	476								21
SB OFF RAMP (EXIT 583) TO MAXWELL REST AREA	25A,27B		677	677								30
SB ON RAMP FROM MAXWELL REST AREA	25A,27B		476	476								21
NB OFF RAMP (EXIT 586) TO MAXWELL ROAD	25A,27B		1,188	1,188								51
NB ON RAMP FROM MAXWELL ROAD	25A,27B		1,115	1,115								48
SB OFF RAMP (EXIT 586) TO MAXWELL ROAD	25A,27B		1,102	1,102								47
SB ON RAMP FROM MAXWELL ROAD	25A,27B		1,152	1,152								49
NB ON RAMP FROM NORTH MAXWELL ROAD	25A,27B		935	935								40
SB OFF RAMP (EXIT 588) TO NORTH MAXWELL ROAD	25A,27B		1,749	1,749								74
NB OFF RAMP (EXIT 591) TO DELEVAN ROAD	25A,27B		1,201	1,201								51
NB ON RAMP FROM DELEVAN ROAD	25A,27B		968	968								42
SB OFF RAMP (EXIT 591) TO DELEVAN ROAD	25A,27B		1,129	1,129								48
SB ON RAMP FROM DELEVAN ROAD	25A,27B		951	951								41
SUBTOTAL		140,479	13,798	156,186	3,424	1,909	1,633	137,887	2,592	72	3,141	3,523
TOTAL		310,463			5,333		1,633	140,479		6,736		

PAVEMENT DELINEATION QUANTITIES

PDQ-1

REVISED BY | DATE REVISED
CHUCK COOK | JEFF JEWETT
CALCULATED-DESIGNED BY | CHECKED BY
FUNCTIONAL SUPERVISOR
SERGIO ACEVES

STATE OF CALIFORNIA - DEPARTMENT OF TRANSPORTATION
Caltrans
TRAFFIC

LAST REVISION 10-11-10 | DATE PLOTTED => 02-FEB-2012 | TIME PLOTTED => 14:19

Dist	COUNTY	ROUTE	POST MILES TOTAL PROJECT	SHEET No.	TOTAL SHEETS
03	Col	5	R21.0/R34.4	12	28

REGISTERED CIVIL ENGINEER 1-00-2012 DATE

January 30, 2012
PLANS APPROVAL DATE

REGISTERED PROFESSIONAL ENGINEER Jeffrey S Jewett No. 49233 Exp. 9-30-12 CIVIL STATE OF CALIFORNIA

THE STATE OF CALIFORNIA OR ITS OFFICERS OR AGENTS SHALL NOT BE RESPONSIBLE FOR THE ACCURACY OR COMPLETENESS OF SCANNED COPIES OF THIS PLAN SHEET.

THERMOPLASTIC PAVEMENT MARKING

LOCATION	REMOVE THERMOPLASTIC PAVEMENT MARKING				THERMOPLASTIC PAVEMENT MARKING				
	DESCRIPTION				DESCRIPTION				
	STOP	AHEAD	TYPE 1(24') ARROW	TYPE V ARROW	STOP	AHEAD	TYPE 1(24') ARROW	TYPE V ARROW	LIMIT LINE
	SQFT	SQFT	SQFT	SQFT	SQFT	SQFT	SQFT	SQFT	SQFT
NB OFF RAMP (EXIT 583) TO MAXWELL REST AREA				66				66	
SB OFF RAMP (EXIT 583) TO MAXWELL REST AREA				66				66	
NB OFF RAMP (EXIT 586) TO MAXWELL ROAD	22	31		66	66	31		66	50
NB ON RAMP FROM MAXWELL ROAD			31				31		
SB OFF RAMP (EXIT 586) TO MAXWELL ROAD	22	31		66	66	31		66	59
SB ON RAMP FROM MAXWELL ROAD			31				31		
NB ON RAMP FROM NORTH MAXWELL ROAD			31				31		
SB OFF RAMP (EXIT 588) TO NORTH MAXWELL	22	31		66	44	31		66	44
NB OFF RAMP (EXIT 591) TO DELEVAN ROAD	22	31		66	66	31		66	59
NB ON RAMP FROM DELEVAN ROAD			31				31		
SB OFF RAMP (EXIT 591) TO DELEVAN ROAD	66	31		66	66	31		66	59
SB ON RAMP FROM DELEVAN ROAD			31				31		
SUBTOTAL	154	155	155	462	308	155	155	462	271
TOTAL	926				1351				

OBJECT MARKER

DESCRIPTION	OBJECT MARKER (TYPE L-1)	
	FNBT	FSBT
	EA	EA
LURLINE CREEK Br	2	2
STONE CORRAL CREEK Br	2	2
FUNKS SLOUGH OVERFLOW Br	2	1
NORTH MAXWELL OH	1	2
FUNKS CREEK Br	2	2
HUNTERS CREEK Br	2	2
SUBTOTAL	11	11
TOTAL	22	

PAVEMENT DELINEATION QUANTITIES

PDQ-2

REVISED BY | DATE REVISED
CHUCK COOK | JEFF JEWETT
CALCULATED-DESIGNED BY | CHECKED BY
FUNCTIONAL SUPERVISOR
SERGIO ACEVES

STATE OF CALIFORNIA - DEPARTMENT OF TRANSPORTATION
Caltrans
TRAFFIC

LAST REVISION 10-11-10
DATE PLOTTED => 02-FEB-2012
TIME PLOTTED => 14:19

Dist	COUNTY	ROUTE	POST MILES TOTAL PROJECT	SHEET No.	TOTAL SHEETS
03	Col	5	R21.0/R34.4	13	28

REGISTERED CIVIL ENGINEER 1-25-2012 DATE

January 30, 2012
PLANS APPROVAL DATE

REGISTERED PROFESSIONAL ENGINEER RONALD S. SYKES No. C35526 Exp. 9-30-13 CIVIL STATE OF CALIFORNIA

THE STATE OF CALIFORNIA OR ITS OFFICERS OR AGENTS SHALL NOT BE RESPONSIBLE FOR THE ACCURACY OR COMPLETENESS OF SCANNED COPIES OF THIS PLAN SHEET.

ABBREVIATION:

WMA - WARM MIX ASPHALT

ROADWAY QUANTITIES

LOCATION				DIRECTION	RUBBERIZED HOT MIX ASPHALT (OPEN GRADED WMA)	TACK COAT	COLD PLANE ASPHALT CONCRETE PAVEMENT	REPLACE ASPHALT CONCRETE SURFACING	(N) HOT MIX ASPHALT (TYPE A)	REMOVE CONCRETE PAVEMENT	HOT MIX ASPHALT (TYPE A)
POST MILE LIMITS		DESCRIPTION									
BEGIN	END	BEGIN	END		TON	TON	SQYD	CY	TON	CY	TON
R21.00	R22.31	BEGIN PROJECT	BB LURLINE CREEK BRIDGE	NB	1,689	7.6	607			45	319.0
R22.33	R27.74	EB LURLINE CREEK BRIDGE	BB STONE CORRAL CREEK BRIDGE	NB	6,987	13.8	1,214			87	632.0
R27.75	R29.02	EB STONE CORRAL CREEK BRIDGE	BB FUNK SLOUGH OVERFLOW BRIDGE	NB	1,636	8.6	737			42	313.0
R29.05	R29.25	EB FUNK SLOUGH OVERFLOW BRIDGE	BB NORTH MAXWELL OH	NB	262	1.2	260				
R29.33	R30.82	EB NORTH MAXWELL OH	BB FUNKS CREEK BRIDGE	NB	1,973	9.0	1,115	75.0	153.0		
R30.83	R32.94	EB FUNKS CREEK BRIDGE	BB HUNTERS CREEK BRIDGE	NB	2,723	12.2	260				
R32.96	R34.37	EB HUNTERS CREEK BRIDGE	END PROJECT/ COUNTY LINE	NB	1,815	8.2	260				
R21.00	R22.30	BEGIN PROJECT	BB LURLINE CREEK BRIDGE	SB	1,689	7.6	607			42	313.0
R22.32	R27.73	EB LURLINE CREEK BRIDGE	BB STONE CORRAL CREEK BRIDGE	SB	6'987	31.0	1,214			87	632.0
R27.75	R29.01	EB STONE CORRAL CREEK BRIDGE	BB FUNK SLOUGH OVERFLOW BRIDGE	SB	1,631	7.5	607			45	319.0
R29.04	R29.23	EB FUNK SLOUGH OVERFLOW BRIDGE	BB NORTH MAXWELL OH	SB	263	1.2	260				
R29.30	R30.81	EB NORTH MAXWELL OH	BB FUNKS CREEK BRIDGE	SB	2,059	9.1	260				
R30.83	R32.93	EB FUNKS CREEK BRIDGE	BB HUNTERS CREEK BRIDGE	SB	2,720	12.2	260				
R32.96	R34.37	EB HUNTERS CREEK BRIDGE	END PROJECT/ COUNTY LINE	SB	1,837	8.1	260				
		NB ROUTE 5 OFF RAMP (EXIT 583)	REST AREA	NB	137	0.7	24	2.0	4.1		
		REST AREA	NB ROUTE 5 ON RAMP	NB	100	0.5	50	4.2	8.5		
		NB ROUTE 5 OFF RAMP (EXIT 586)	MAXWELL ROAD	NB	216	1.0	112	9.3	19.0		
		MAXWELL ROAD	NB ROUTE 5 ON RAMP	NB	243	1.1	112	9.3	19.0		
		NB ROUTE 5 ON RAMP	NORTH MAXWELL OH	NB	255	1.2	1,094	91.0	185.0		
		NB ROUTE 5 OFF RAMP (EXIT 591)	DELEVAN ROAD	NB	220	1.0	740	62.0	126.0		
		DELEVAN ROAD	NB ROUTE 5 ON RAMP	NB	261	1.2	740	62.0	126.0		
		REST AREA	SB ROUTE 5 ON RAMP	SB	211	1.0	36	3.0	6.1		
		SB ROUTE 5 OFF RAMP (EXIT 583)	REST AREA	SB	139	0.6	24	2.0	4.1		
		SB ROUTE 5 OFF RAMP (EXIT 586)	MAXWELL ROAD	SB	204	1.0	100	8.3	17.0		
		MAXWELL ROAD	SB ROUTE 5 ON RAMP	SB	262	1.2	334	24.0	49.0		
		SB ROUTE 5 OFF RAMP (EXIT 588)	NORTH MAXWELL OH	SB	355	1.5	743	62.0	126.0		
		DELEVAN ROAD	SB ROUTE 5 ON RAMP	SB	213	1.0	212	17.6	36.0		
		SB ROUTE 5 OFF RAMP (EXIT 591)	DELEVAN ROAD	SB	203	0.9	212	17.6	36.0		
HMA DIKE											207.2
TOTAL					37,290	151.2	12,454	449.3	914.8	348	2,735.2

(N) - NOT A SEPARATE PAY ITEM, FOR INFORMATION ONLY

CRACK TREATMENT

POST MILE LIMITS		DIRECTION	LNMI
BEGIN	END		
R26.90	R29.50	NB	4.96
R22.32	R29.50	SB	10.86
TOTAL			15.82

SHOULDER BACKING

POST MILE LIMITS		TON
BEGIN	END	
R21.00	R34.37	10,600
TOTAL		10,600

RUMBLE STRIP

COUNTY	ROUTE	POST MILE LIMITS			RUMBLE STRIP
		Beg	END	DIRECTION	R+/L+ STA
Col	5	R21.00	R22.31	NB	138
		R22.33	R27.74	NB	571
		R27.75	R29.02	NB	134
		R29.05	R29.25	NB	21
		R29.33	R30.82	NB	157
		R30.83	R32.94	NB	223
		R32.96	R34.37	NB	149
		R21.00	R22.30	SB	137
		R22.32	R27.73	SB	571
		R27.75	R29.01	SB	133
		R29.04	R29.23	SB	17
		R29.30	R30.81	SB	159
		R30.83	R32.93	SB	222
		R32.96	R34.37	SB	149
		TOTAL			2,781

SUMMARY OF QUANTITIES

Q-1

REVISED BY | DATE REVISED

ROBERT M. FLOYD II | REX P. HERVEY

CALCULATED-DESIGNED BY | CHECKED BY

FUNCTIONAL SUPERVISOR | RONALD S. SYKES

STATE OF CALIFORNIA - DEPARTMENT OF TRANSPORTATION
Caltrans
MAINTENANCE DESIGN

LAST REVISION 00-00-00 | DATE PLOTTED => 02-FEB-2012 | TIME PLOTTED => 14:19

Dist	COUNTY	ROUTE	POST MILES TOTAL PROJECT	SHEET No.	TOTAL SHEETS
03	Col	5	R21.0/R34.4	14	28

REGISTERED CIVIL ENGINEER 1-25-2012 DATE

January 30, 2012
PLANS APPROVAL DATE

REGISTERED PROFESSIONAL ENGINEER RONALD S. SYKES No. C35526 Exp. 9-30-13 CIVIL STATE OF CALIFORNIA

THE STATE OF CALIFORNIA OR ITS OFFICERS OR AGENTS SHALL NOT BE RESPONSIBLE FOR THE ACCURACY OR COMPLETENESS OF SCANNED COPIES OF THIS PLAN SHEET.

METAL BEAM GUARD RAIL QUANTITIES

LOCATION DESCRIPTION POST MILE			DIRECTION	(N) LAYOUT TYPE	ADJUST MBGR	RECONSTRUCT MBGR (WOOD POST)	TRANSITION RAILING (TYPE WB)	END ANCHOR Assy (TYPE SFT)	ALTERNATIVE FLARED TERMINAL SYSTEM	ALTERNATIVE IN-LINE TERMINAL SYSTEM	END CAP (TYPE TC)
BEGIN	END	R+/L+			LF	LF	EA	EA	EA	EA	EA
R22.28	R22.31	L+	NB	12E	159						
R22.30	R22.31	R+	NB	12B	53						
R22.72	R22.76	L+	NB	16E	211						
R24.71	R24.74	L+	NB	16E	159						
R26.71	R26.75	L+	NB	16E	211						
R27.71	R27.74	L+	NB	12E	159						
R27.73	R27.74	R+	NB	12B	53						
R28.93	R29.02	R+	NB	12B		475			1		
R29.05	R29.25	R+	NB	12D		1,109	2				1
R29.21	R29.25	L+	NB	12E		159					
R29.33	R29.49	R+	NB	12DD		740		1			1
R30.80	R30.82	L+	NB	12E	159						
R30.82	R30.83	R+	NB	12B	53						
R31.82	R31.85	L+	NB	14A	159						
R32.91	R32.94	L+	NB	12B	159						
R32.93	R32.94	R+	NB	12B	53						
R22.31	R22.35	L+	SB	12E	211						
R22.31	R22.32	R+	SB	12B	53						
R22.72	R22.75	L+	SB	16E	159						
R24.70	R24.72	L+	SB	16E	106						
R26.72	R26.74	L+	SB	16E	106						
R27.75	R27.77	R+	SB	12B	106						
R27.75	R27.78	L+	SB	12E	159						
R29.04	R29.19	R+	SB	12D		792	1				1
R29.29	R29.47	R+	SB	12B		951	1			1	
R30.84	R30.85	R+	SB	12B	106						
R30.84	R30.86	L+	SB	12E	159						
R31.83	R31.87	L+	SB	14A	211						
R32.96	R32.97	R+	SB	12B	106						
R32.96	R32.99	L+	SB	12E	159						
TOTAL					3,229	4,226	4	1	1	1	3

* (N) NOT A SEPARATE PAY ITEM, FOR INFORMATION ONLY

SUMMARY OF QUANTITIES

Q-2

STATE OF CALIFORNIA - DEPARTMENT OF TRANSPORTATION
Caltrans
MAINTENANCE DESIGN

FUNCTIONAL SUPERVISOR: RONALD S. SYKES
CALCULATED-DESIGNED BY: ROBERT M. FLOYD II
CHECKED BY: REX P. HERVEY
REVISED BY
DATE REVISED

LAST REVISION 00-00-00
DATE PLOTTED => 02-FEB-2012
TIME PLOTTED => 14:19

Dist	COUNTY	ROUTE	POST MILES TOTAL PROJECT	SHEET No.	TOTAL SHEETS
03	Col	5	R21.0/R34.4	15	28

REGISTERED CIVIL ENGINEER 1-25-2012 DATE

January 30, 2012
PLANS APPROVAL DATE

REGISTERED PROFESSIONAL ENGINEER RONALD S. SYKES No. C35526 Exp. 9-30-13 CIVIL STATE OF CALIFORNIA

THE STATE OF CALIFORNIA OR ITS OFFICERS OR AGENTS SHALL NOT BE RESPONSIBLE FOR THE ACCURACY OR COMPLETENESS OF SCANNED COPIES OF THIS PLAN SHEET.

HOT MIX ASPHALT DIKE

LOCATION/ DESCRIPTION		DIRECTION	REMOVE ASPHALT CONCRETE DIKE	PLACE HOT MIX ASPHALT DIKE (TYPE A)	PLACE HOT MIX ASPHALT DIKE (TYPE D)	PLACE HOT MIX ASPHALT DIKE (TYPE E)	PLACE HOT MIX ASPHALT DIKE (TYPE F)	HOT MIX ASPHALT (TYPE A)
BEGIN	END		LF	LF	LF	LF	LF	TON
R29.06	R29.27	NB	1,110				1,110	14.9
R29.37	R29.50	NB	687				687	9.2
R29.50	R29.55	NB	264			264		7.0
NB ROUTE 5 OFF RAMP (EXIT 591)	DELEVAN ROAD	NB	455	455				12.5
DELEVAN ROAD	NB ROUTE 5 ON-RAMP	NB	365	365				10.0
MAXWELL ROAD	SB ROUTE 5 ON-RAMP	SB	220	220				6.1
R28.88	R29.00	SB	634		634			37.7
R29.04	R29.19	SB	792			792		20.9
R29.28	R29.30	SB	106			106		2.8
R30.95	R31.19	SB	1,246			1,246		32.9
R31.80	R31.88	SB	430	430				11.8
R31.90	R32.00	SB	539	539				14.8
SB ROUTE 5 OFF RAMP (EXIT 591)	DELEVAN ROAD	SB	430	430				11.8
DELEVAN ROAD	SB ROUTE 5 ON-RAMP	SB	540	540				14.8
		TOTAL	7,818	2,979	634	2,408	1,797	207.2*

* QUANTITY INCLUDED IN ROADWAY QUANTITIES TABLE

SUMMARY OF QUANTITIES

Q-3

STATE OF CALIFORNIA - DEPARTMENT OF TRANSPORTATION
Caltrans
MAINTENANCE DESIGN

FUNCTIONAL SUPERVISOR: RONALD S. SYKES
CALCULATED-DESIGNED BY: ROBERT M. FLOYD II
CHECKED BY: REX P. HERVEY
REVISED BY
DATE REVISED

LAST REVISION 00-00-00
DATE PLOTTED => 02-FEB-2012
TIME PLOTTED => 14:19

Dist	COUNTY	ROUTE	POST MILES TOTAL PROJECT	SHEET No.	TOTAL SHEETS
03	Col	5	R21.0/R34.4	16	28

Randell D. Hiatt
REGISTERED CIVIL ENGINEER

May 20, 2011
PLANS APPROVAL DATE

REGISTERED PROFESSIONAL ENGINEER Randell D. Hiatt No. C50200 Exp. 6-30-11 CIVIL STATE OF CALIFORNIA

The State of California or its officers or agents shall not be responsible for the accuracy or completeness of electronic copies of this plan sheet.

To accompany plans dated 1-30-12

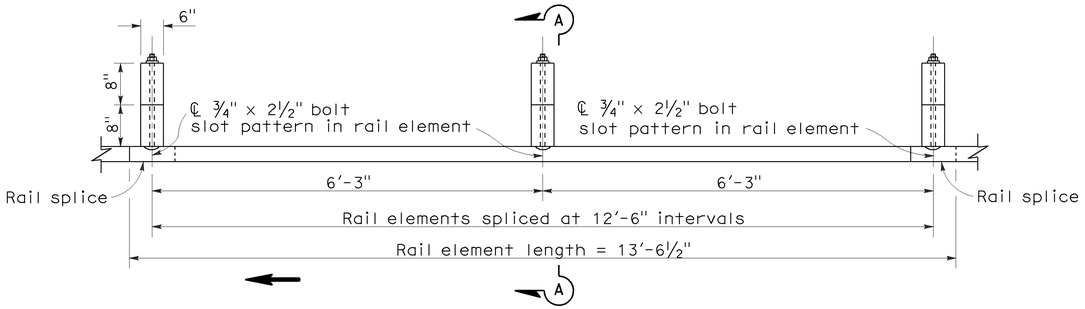

PLAN

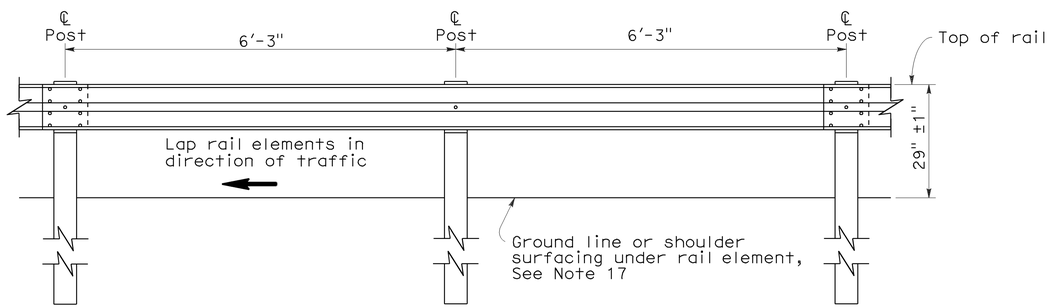

ELEVATION

METAL BEAM GUARD RAILING WITH WOOD POST AND BLOCKS

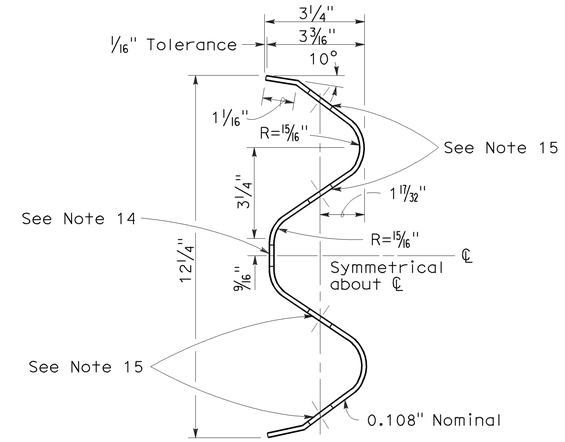

SECTION THRU RAIL ELEMENT

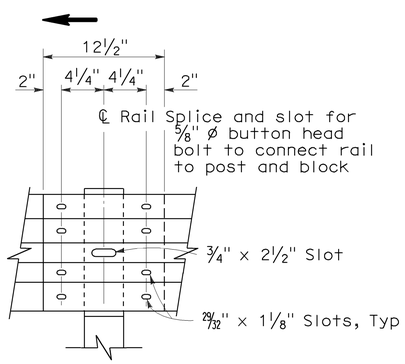

ELEVATION

RAIL ELEMENT SPLICE DETAIL

a) Connect the over lapped end of the rail elements with ⅝" ø x 1⅜" button head oval shoulder splice bolts inserted into the 29⁄32" x 1⅛" slots and bolted together with ⅝" ø recessed hex nuts. Recess of hex nut points toward rail element. A total of 8 bolts and nuts are to be used at each rail splice connection.

b) The ends of the rail elements are to be overlapped in the direction of traffic (see details).

c) Where end cap is to be attached to the end of a rail element, a total of 4 of the above described splice bolts and nuts are to be used.

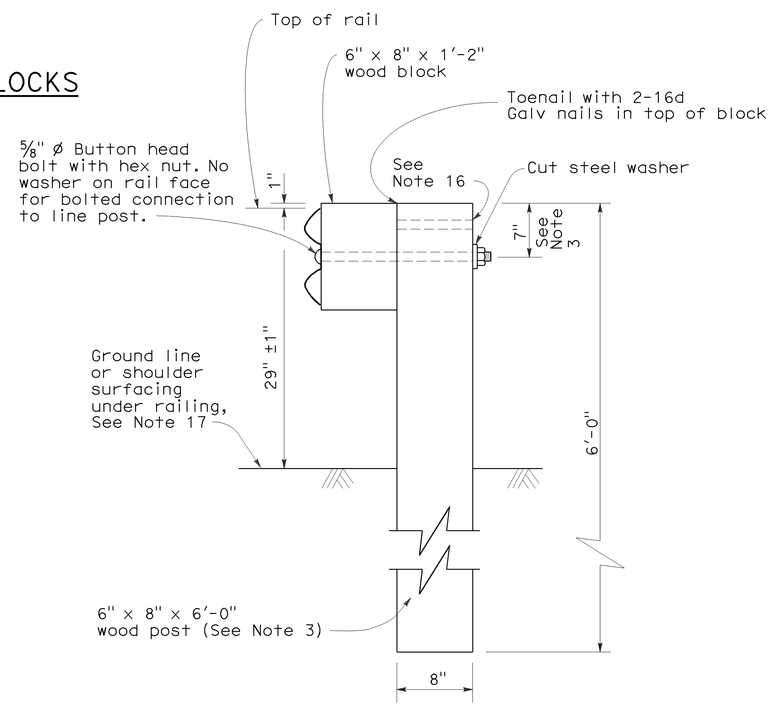

SECTION A-A

TYPICAL WOOD LINE POST INSTALLATION

See Note 4

NOTES:

1. For details of steel post installations, see Standard Plan A77A2.
2. For details of standard hardware used to construct guard railing, see Standard Plan A77B1.
3. For details of wood posts and wood blocks used to construct guard railing, see Standard Plan A77C1.
4. For additional installation details, see Standard Plan A77C3.
5. Guard railing post spacing to be 6'-3" center to center, except as otherwise noted.
6. For guard railing typical layouts, see the A77E, A77F and A77G Series of Standard Plans.
7. For terminal system end treatment details, see the A77L Series of Standard Plans. To connect railing to terminal system end treatment, transition the top of railing height at a ratio of 120:1 to terminal system end treatment height plus one 12'-6" standard railing section at the transitioned height for a horizontal connection to the end treatment.
8. For guard railing end anchor details, see Standard Plans A77H1 and A77I2.
9. For details of guard railing transition to bridge railing, see Standard Plan A77J4.
10. For additional details of guard railing connection to bridge railings, see Standard Plans A77J1, A77J2 and A77K1.
11. For guard railing connection details to abutments and walls, see Standard Plan A77J3.
12. Direction of adjacent traffic indicated by ➡.
13. For typical guard railing delineation and dike positioning details, see Standard Plan A77C4.
14. Slotted hole for bolted connection of rail element to block and post. See "Section Thru Rail Element".
15. Slotted holes for splice bolts to overlap ends of rail element. See "Section Thru Rail Element".
16. Additional hole in uppermost portion of line post is for potential future adjustments of railing height. See Standard Plan A77C1.
17. Install posts in soil.

STATE OF CALIFORNIA
DEPARTMENT OF TRANSPORTATION

METAL BEAM GUARD RAILING STANDARD RAILING SECTION (WOOD POST WITH WOOD BLOCK)

NO SCALE

RSP A77A1 DATED MAY 20, 2011 SUPERSEDES STANDARD PLAN A77A1 DATED MAY 1, 2006 - PAGE 41 OF THE STANDARD PLANS BOOK DATED MAY 2006.

REVISED STANDARD PLAN RSP A77A1

2006 REVISED STANDARD PLAN RSP A77A1

3-10-11

To accompany plans dated 1-30-12

Dist	COUNTY	ROUTE	POST MILES TOTAL PROJECT	SHEET No.	TOTAL SHEETS
03	Col	5	R21.0/R34.4	17	28

Randell D. Hiatt
REGISTERED CIVIL ENGINEER

May 20, 2011
PLANS APPROVAL DATE

REGISTERED PROFESSIONAL ENGINEER
Randell D. Hiatt
No. C50200
Exp. 6-30-11
CIVIL
STATE OF CALIFORNIA

The State of California or its officers or agents shall not be responsible for the accuracy or completeness of electronic copies of this plan sheet.

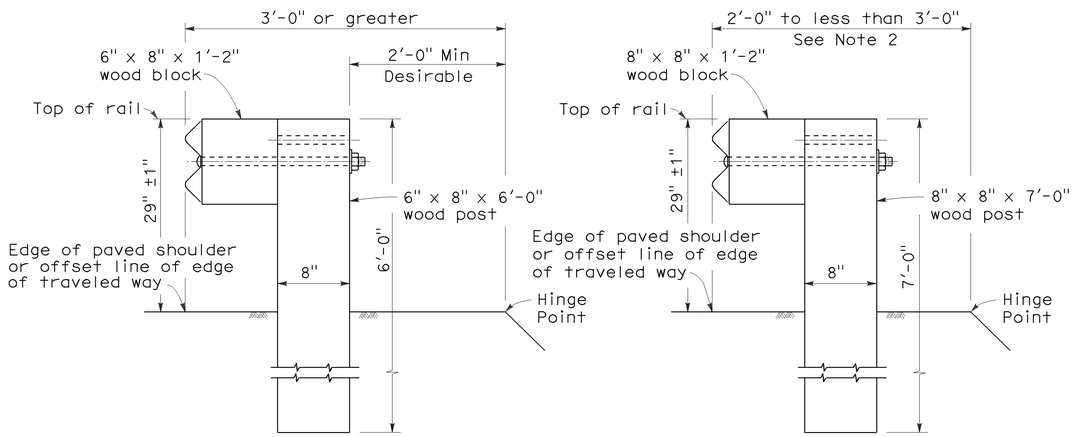

DETAIL A
TYPICAL ROADWAY INSTALLATION
See Note 1

DETAIL B
NARROW ROADWAY INSTALLATION
See Note 1

POST EMBEDMENT

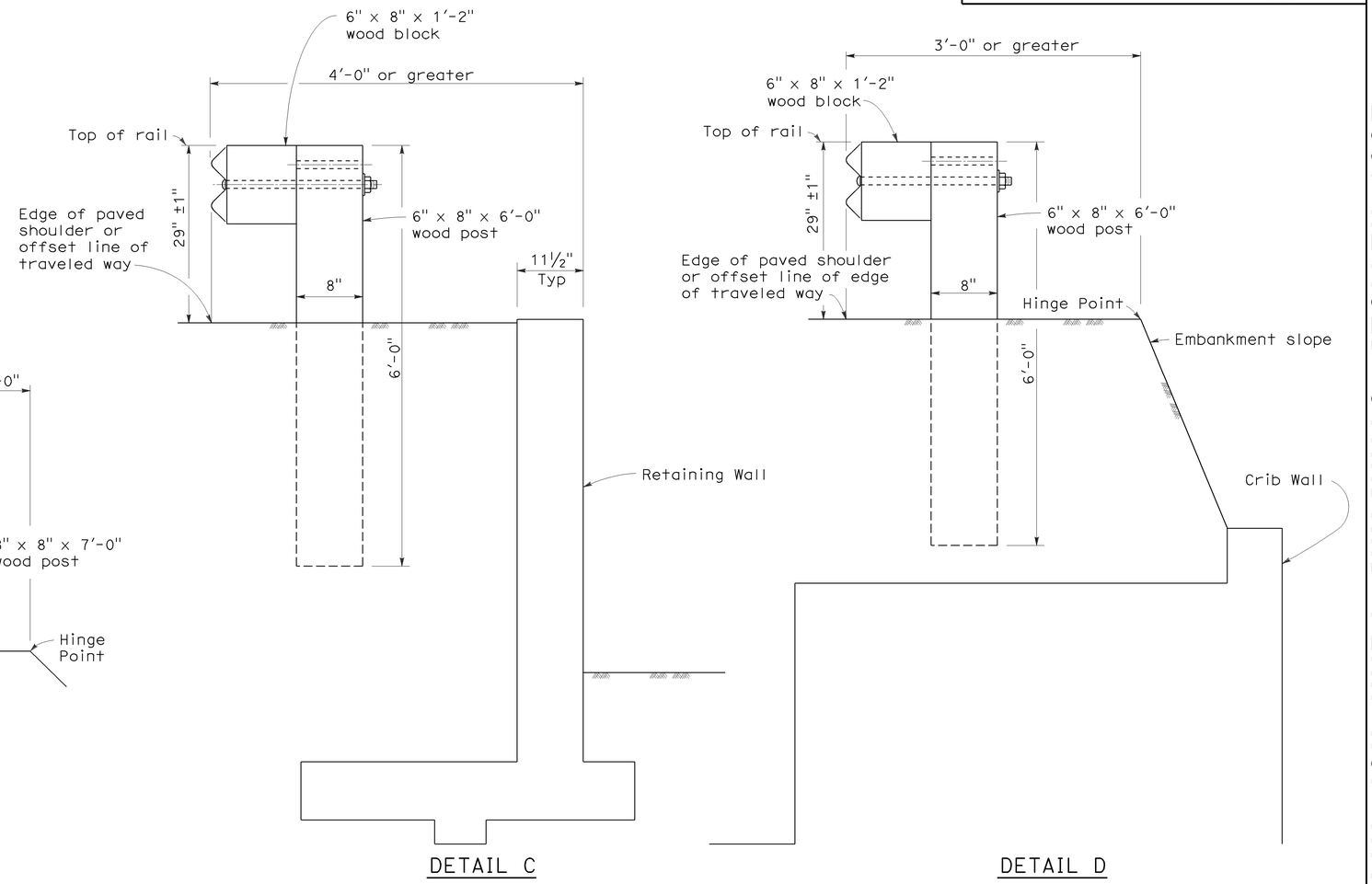

DETAIL C

DETAIL D

INSTALLATION AT EARTH RETAINING WALLS

NOTES:

1. These installation details also applicable to steel line post installations. For Detail A, C, and D, where steel line post installations are constructed, W6 x 9 steel post, 6'-0" in length, with 6" x 8" x 1'-2" notched wood blocks or notched recycled plastic blocks are to be used in place of the size of wood post and wood block shown. For Detail B, where steel line post installations are constructed, W6 x 9 steel post, 7'-0" in length, with 6" x 8" x 1'-2" notched wood blocks or notched recycled plastic blocks are to be used in place of the size of wood post and wood block shown. For additional installation details, see Standard Plans A77A1 and A77A2.
2. Where the distance between the face of the rail and the hinge point is less than 2'-0", see the Project Plans for special details.
3. For dike positioning with guard railing installations, see Standard Plan A77C4.

STATE OF CALIFORNIA
DEPARTMENT OF TRANSPORTATION

METAL BEAM GUARD RAILING TYPICAL LINE POST EMBEDMENT AND HINGE POINT OFFSET DETAILS

NO SCALE

RSP A77C3 DATED MAY 20, 2011 SUPERSEDES STANDARD PLAN A77C3
DATED MAY 1, 2006 - PAGE 46 OF THE STANDARD PLANS BOOK DATED MAY 2006.

REVISED STANDARD PLAN RSP A77C3

2006 REVISED STANDARD PLAN RSP A77C3

3-10-11

Dist	COUNTY	ROUTE	POST MILES TOTAL PROJECT	SHEET No.	TOTAL SHEETS
03	Col	5	R21.0/R34.4	18	28

Randell D. Hiatt
REGISTERED CIVIL ENGINEER

May 20, 2011
PLANS APPROVAL DATE

REGISTERED PROFESSIONAL ENGINEER
Randell D. Hiatt
No. C50200
Exp. 6-30-11
CIVIL
STATE OF CALIFORNIA

The State of California or its officers or agents shall not be responsible for the accuracy or completeness of electronic copies of this plan sheet.

To accompany plans dated 1-30-12

NOTES:

1. When necessary to place dike in front of face of guard railing, only Type C dike may be used. For dike details, see Standard Plan A87B.
2. For standard railing post embedment, see Standard Plans A77C3.
3. Guard railing delineation to be used where shown on the Project Plans.
4. When dike or curb is placed under guard railing, the maximum height of the dike or curb shall be 4". Mountable dike should not be used. For dike and curb details, see Standard Plans A87A and A87B.
5. For details of typical distance between the face of rail and hinge point, see Standard Plan A77C3.
6. For steel line posts, use 1/4 - 20 self-tapping screws in 0.22" diameter holes or 1/4" bolts in 9/32" diameter holes.

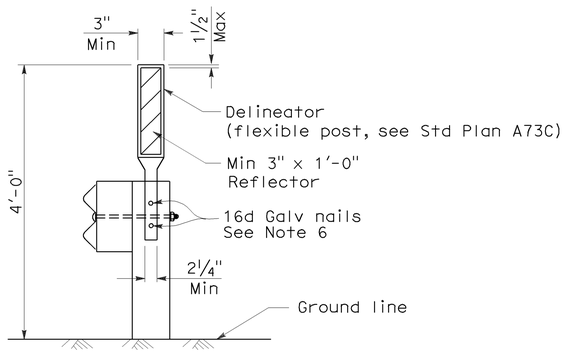

GUARD RAILING DELINEATION

See Note 3

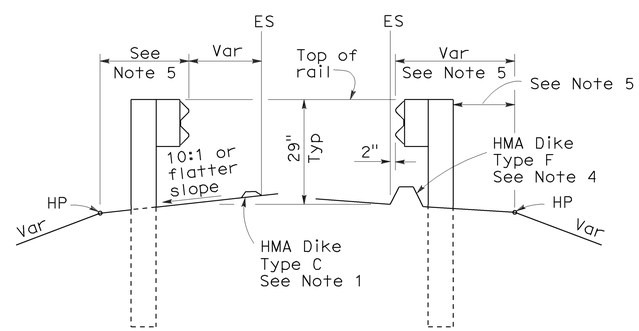

DIKE POSITIONING

See Note 1

STATE OF CALIFORNIA
DEPARTMENT OF TRANSPORTATION

METAL BEAM GUARD RAILING TYPICAL RAILING DELINEATION AND DIKE POSITIONING DETAILS

NO SCALE

RSP A77C4 DATED MAY 20, 2011 SUPERSEDES RSP A77C4 DATED JUNE 6, 2008 AND STANDARD PLAN A77C4 DATED MAY 1, 2006 - PAGE 47 OF THE STANDARD PLANS BOOK DATED MAY 2006.

REVISED STANDARD PLAN RSP A77C4

2006 REVISED STANDARD PLAN RSP A77C4

3-10-11

DIST	COUNTY	ROUTE	POST MILES TOTAL PROJECT	SHEET NO.	TOTAL SHEETS
03	Col	5	R21.0/R34.4	19	28

Randell D. Hiatt
REGISTERED CIVIL ENGINEER

June 6, 2008
PLANS APPROVAL DATE

REGISTERED PROFESSIONAL ENGINEER
Randell D. Hiatt
No. C50200
Exp. 6-30-09
CIVIL
STATE OF CALIFORNIA

The State of California or its officers or agents shall not be responsible for the accuracy or completeness of electronic copies of this plan sheet.

To accompany plans dated 1-30-12

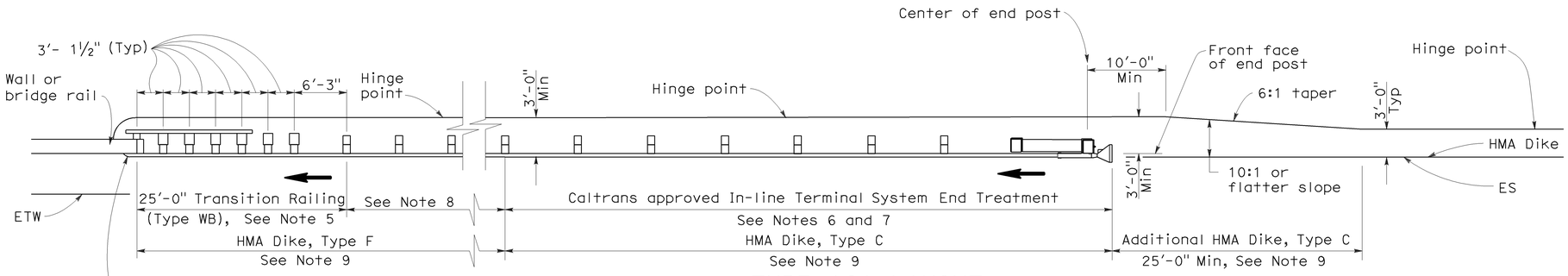

TYPE 12A LAYOUT

(GUARD RAILING INSTALLATION AT STRUCTURE APPROACH WITH AN IN-LINE END TREATMENT AT TRAFFIC APPROACH END OF RAILING)
See Notes 10

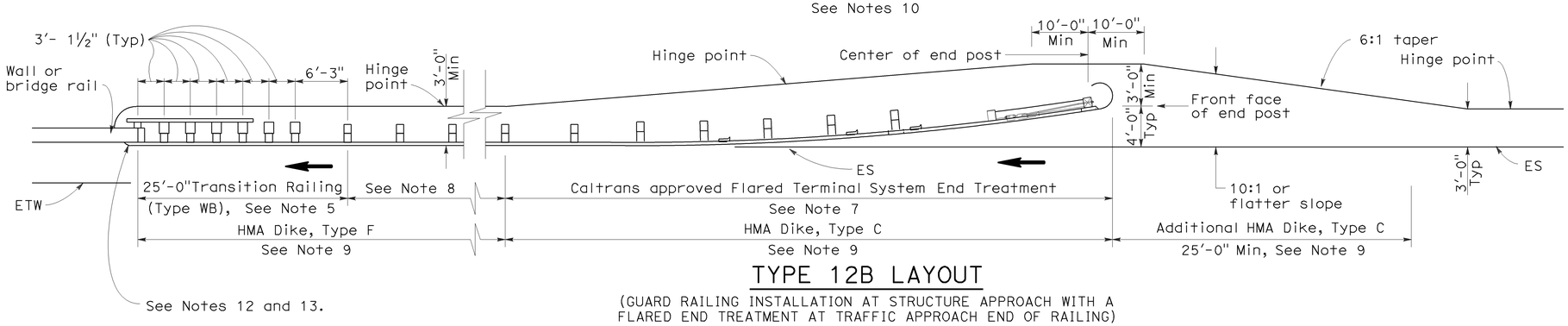

TYPE 12B LAYOUT

(GUARD RAILING INSTALLATION AT STRUCTURE APPROACH WITH A FLARED END TREATMENT AT TRAFFIC APPROACH END OF RAILING)
See Notes 10

NOTES:

1. Line post, blocks and hardware to be used are shown on Standard Plans A77A1, A77A2, A77B1, A77C1 and A77C2.
2. Guard rail post spacing to be 6'-3" center to center, except as otherwise noted.
3. Except as noted, line posts are 6" x 8" x 6'-0" wood with 6" x 8" x 1'-2" wood blocks. W6 x 9 steel posts, 6'-0" in length, with 6" x 8" x 1'-2" notched wood blocks or plastic blocks may be used for 6" x 8" x 6'-0" wood posts with 6" x 8" x 1'-2" wood blocks where applicable and when specified.
4. Direction of adjacent traffic indicated by ➡.
5. For Transition Railing (Type WB) details for Types 12A and 12B Layouts, see Standard Plan A77J4.
6. In-line Terminal System End Treatments are used where site conditions will not accommodate a flared end treatment.
7. The type of terminal system end treatment to be used will be shown on the Project Plans.
8. Dependent on site conditions (embankment height, side slopes, or other fixed objects), it may be advisable to construct additional guard railing (a length equal to multiples of 12'-6" with 6'-3" post spacing) between the transition railing and end treatment.
9. Where placement of dike is required with guard railing installations, see Revised Standard Plan RSP A77C4 for dike positioning details.
10. Type 12A or Type 12B Layouts are typically used:
    a. To the right of approaching traffic, at the end of a structure, on two-lane conventional highway where the roadbed width across the structure is less than 40 feet.
    b. To the left of approaching traffic, at the end of a structure, on two-lane conventional highway where the roadbed width across the structure is less than 40 feet.
    c. To the right of approaching traffic at the end of each structure on multilane freeways or expressways with separate adjacent or parallel bridges.
    d. To the right of approaching traffic at the end of the structure on multilane freeways or expressways with decked median on the bridge.
11. See Revised Standard Plan RSP A77F3 for typical layout used left of approaching traffic at the ends of each structure on multilane freeways or expressways with separate adjacent or parallel bridges.
12. For additional details of typical connections to bridge rail, see Connection Detail AA on Revised Standard Plans RSP A77J1 and RSP A77J2 and Connection Detail FF on Standard Plans A77K1 and A77K2.
13. For additional details of a typical connection to walls or abutments, see Standard Plan A77J3.

STATE OF CALIFORNIA
DEPARTMENT OF TRANSPORTATION

METAL BEAM GUARD RAILING TYPICAL LAYOUTS FOR STRUCTURE APPROACH

NO SCALE

RSP A77F1 DATED JUNE 6, 2008 SUPERSEDES STANDARD PLAN A77F1
DATED MAY 1, 2006 - PAGE 54 OF THE STANDARD PLANS BOOK DATED MAY 2006.

REVISED STANDARD PLAN RSP A77F1

2006 REVISED STANDARD PLAN RSP A77F1

Dist	COUNTY	ROUTE	POST MILES TOTAL PROJECT	SHEET No.	TOTAL SHEETS
03	Col	5	R21.0/R34.4	20	28

Randell D. Hiatt
REGISTERED CIVIL ENGINEER

May 20, 2011
PLANS APPROVAL DATE

REGISTERED PROFESSIONAL ENGINEER Randell D. Hiatt No. C50200 Exp. 6-30-11 CIVIL STATE OF CALIFORNIA

The State of California or its officers or agents shall not be responsible for the accuracy or completeness of electronic copies of this plan sheet.

To accompany plans dated 1-30-12

2006 REVISED STANDARD PLAN RSP A77F3

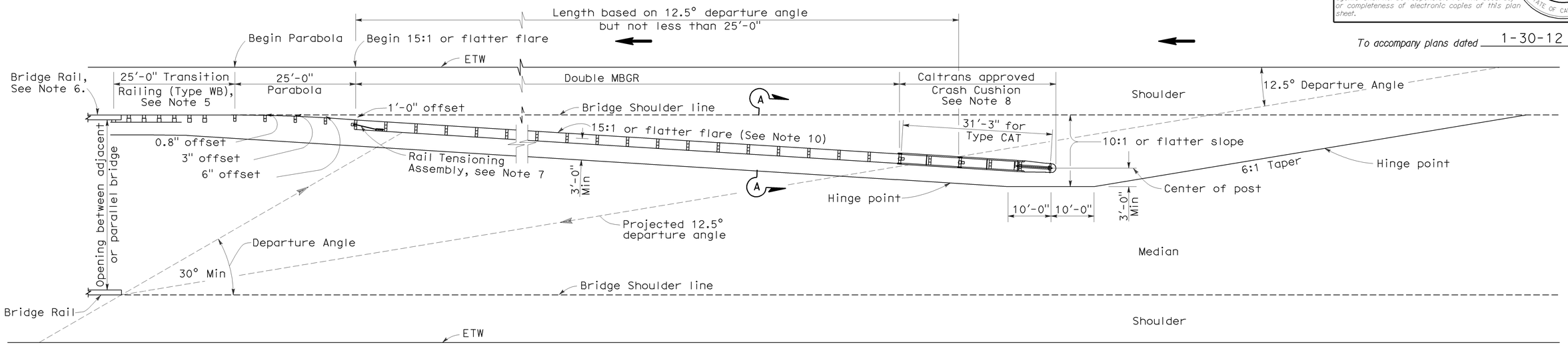

TYPE 12E LAYOUT

See Note 10

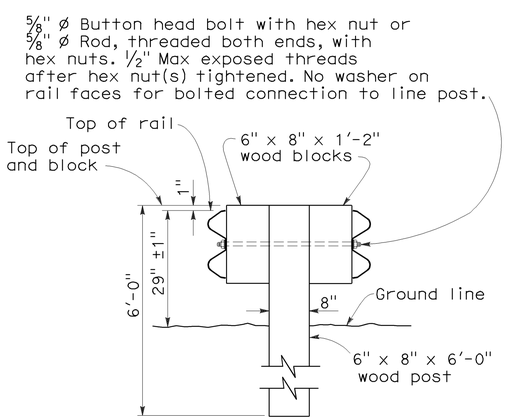

SECTION A-A

TYPICAL DOUBLE METAL BEAM GUARD RAILING

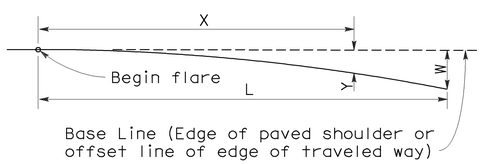

$$Y = \frac{WX^2}{L^2}$$

Y = Offset from base line
W = Maximum offset
X = Distance along base line
L = Length of flare

PARABOLIC FLARE OFFSETS

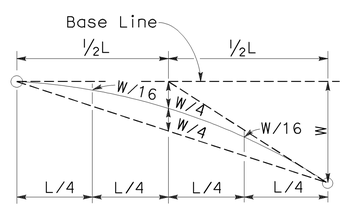

TYPICAL PARABOLIC LAYOUT

NOTES:

1. Line post, blocks and hardware to be used are shown on Standard Plans A77A1, A77A2, A77B1, A77C1 and A77C2.
2. Guard railing post spacing to be 6'-3" center to center, except as otherwise noted.
3. Except as noted, line posts are 6" x 8" x 6'-0" wood with 6" x 8" x 1'-2" wood blocks. W6 x 9 steel posts, 6'-0" in length, with 6" x 8" x 1'-2" notched wood blocks or notched recycled plastic blocks may be used for 6" x 8" x 6'-0" wood line posts with 6" x 8" x 1'-2" wood blocks where applicable and when specified.
4. Direction of adjacent traffic indicated by ⟶.
5. For Transition Railing (Type WB) details, see Standard Plan A77J4.
6. For additional details of a typical connection to bridge rail, see Connection Detail AA on Revised Standard Plan RSP A77J1.
7. For Rail Tensioning Assembly details, see Standard Plan A77H2.
8. The type of Crash Cushion to be used will be shown on the Project Plans.
9. Type 12E Layout is typically used left of approaching traffic at the end of each structure on multilane freeways or expressways where a median type barrier is not constructed between separated roadbeds.
10. The 15:1 or flatter flare is measured off of the edge of traveled way.

STATE OF CALIFORNIA
DEPARTMENT OF TRANSPORTATION

METAL BEAM GUARD RAILING TYPICAL LAYOUTS FOR STRUCTURE APPROACH

NO SCALE

RSP A77F3 DATED MAY 20, 2011 SUPERSEDES RSP A77F3 DATED JUNE 6, 2008 AND STANDARD PLAN A77F3 DATED MAY 1, 2006 - PAGE 56 OF THE STANDARD PLANS BOOK DATED MAY 2006.

REVISED STANDARD PLAN RSP A77F3

3-10-11

Dist	COUNTY	ROUTE	POST MILES TOTAL PROJECT	SHEET No.	TOTAL SHEETS
03	Col	5	R21.0/R34.4	21	28

Randell D. Hiatt
REGISTERED CIVIL ENGINEER

May 20, 2011
PLANS APPROVAL DATE

REGISTERED PROFESSIONAL ENGINEER
Randell D. Hiatt
No. C50200
Exp. 6-30-11
CIVIL
STATE OF CALIFORNIA

The State of California or its officers or agents shall not be responsible for the accuracy or completeness of electronic copies of this plan sheet.

To accompany plans dated 1-30-12

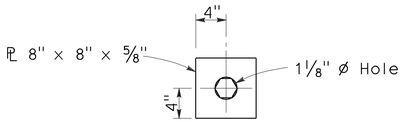

DETAIL A
CABLE CONNECTION
END PLATE

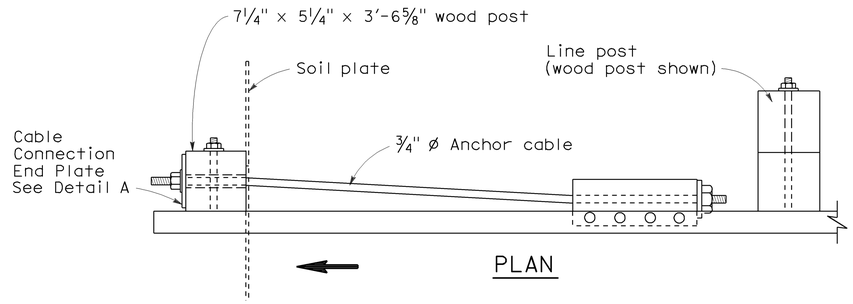

PLAN

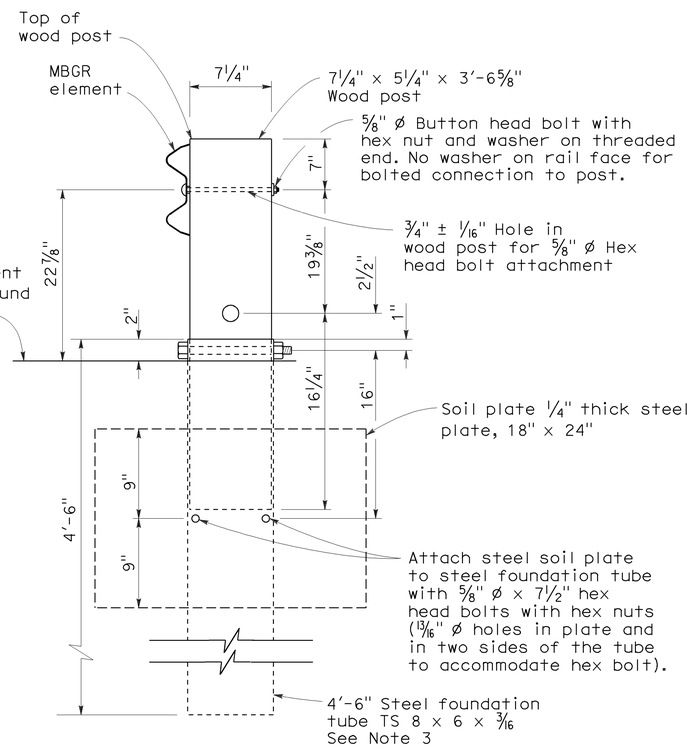

SECTION A-A

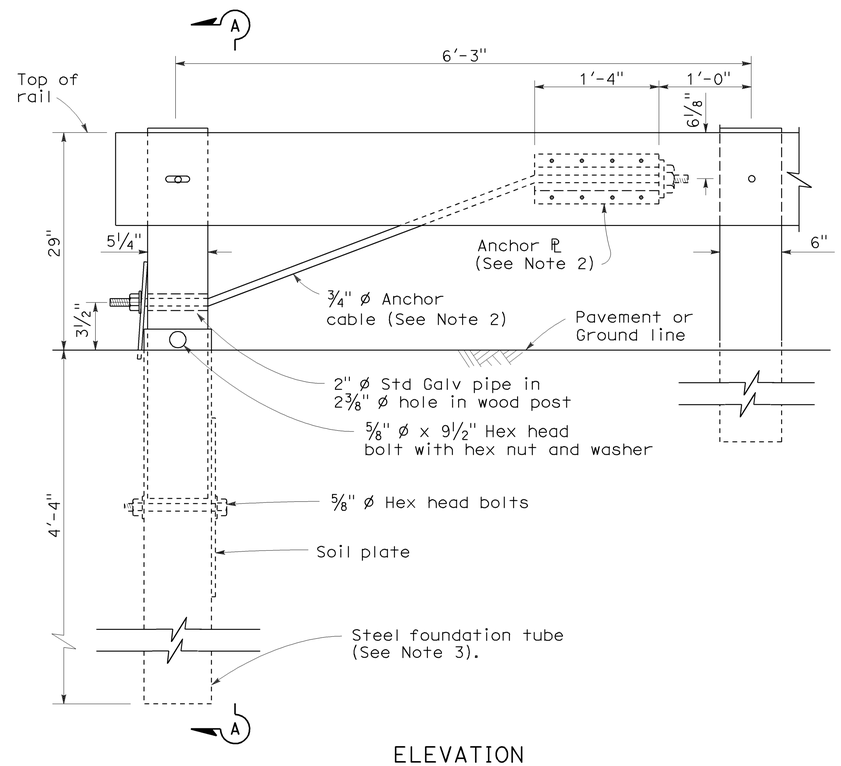

ELEVATION
END ANCHOR
ASSEMBLY (TYPE SFT)
See Note 1

NOTES:

1. See the A77E, A77F and A77G series of Standard Plans for typical use of End Anchor Assembly (Type SFT).
2. For details of the anchor plate and 3/4" cable, see Standard Plan A77H3.
3. A 6'-0" length steel foundation tube, TS 8 x 6 x 3/16, without a soil plate, may be furnished and installed in place of the 4'-6" length steel foundation tube and soil plate shown. Minimum embedment of the 6'-0" length tube shall be 5'-9". A 5/8" Ø hex head bolt and nut shall be installed in the hole in the 6'-0" length tube to keep the wood post from dropping into the tube.
4. Direction of traffic indicated by ⟹.
5. Install line post, steel foundation tube and soil plate in soil.

STATE OF CALIFORNIA
DEPARTMENT OF TRANSPORTATION

METAL RAILING END ANCHOR ASSEMBLY (TYPE SFT)

NO SCALE

RSP A77H1 DATED MAY 20, 2011 SUPERSEDES STANDARD PLAN A77H1
DATED MAY 1, 2006 - PAGE 67 OF THE STANDARD PLANS BOOK DATED MAY 2006.

REVISED STANDARD PLAN RSP A77H1

2006 REVISED STANDARD PLAN RSP A77H1

3-10-07

Dist	COUNTY	ROUTE	POST MILES TOTAL PROJECT	SHEET No.	TOTAL SHEETS
03	Col	5	R21.0/R34.4	22	28

Randell D. Hiatt
REGISTERED CIVIL ENGINEER

May 20, 2011
PLANS APPROVAL DATE

REGISTERED PROFESSIONAL ENGINEER
Randell D. Hiatt
No. C50200
Exp. 6-30-11
CIVIL
STATE OF CALIFORNIA

The State of California or its officers or agents shall not be responsible for the accuracy or completeness of electronic copies of this plan sheet.

To accompany plans dated 1-30-12

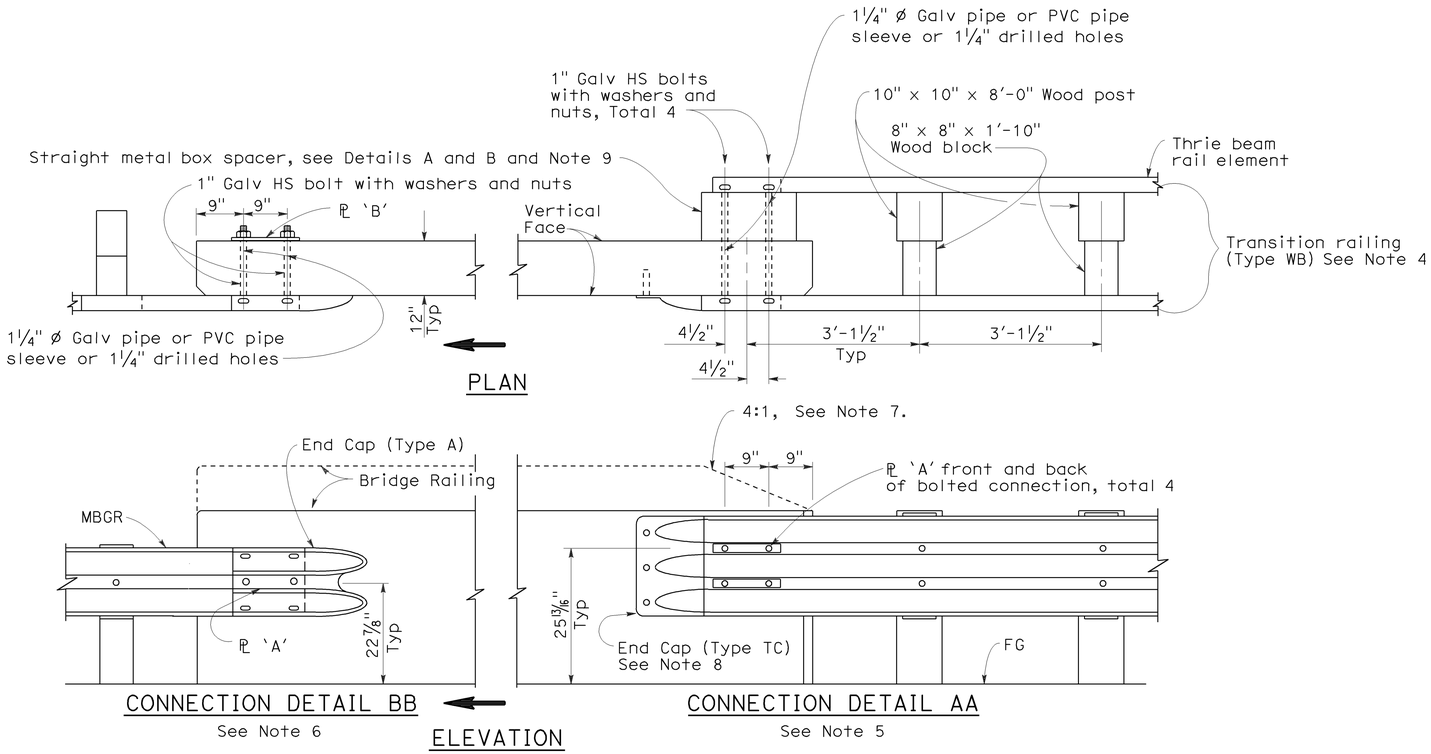

GUARD RAILING CONNECTION TO BRIDGE RAILING WITHOUT SIDEWALK

NOTES:

1. See Revised Standard Plan RSP A77J2 for additional connection details to bridges without sidewalks.
2. Additional details of posts, blocks and hardware are shown on Standard Plan A77B1, A77C1 and A77C2.
3. Direction of adjacent traffic indicated by ➡.
4. For additional details of Transition Railing (Type WB), see Standard Plan A77J4. Transition Railing (Type WB) transitions the 12 gage w-beam standard railing section of guard railing to a heavier gage nested thrie beam railing section which is connected to the concrete bridge railing.
5. For typical use of Connection Detail AA, see Layout Types 12A and 12B on Revised Standard Plan RSP A77F1, Layout Types 12C and 12D on Standard Plan A77F2, and Layout Type 12E on Revised Standard Plan RSP A77F3.
6. For typical use of Connection Detail BB, see Layout Type 12D (structure departure railing connection) on Standard Plan A77F2 and Layout Type 12DD on Standard Plan A77F5.
7. Where the height of the bridge railing exceeds the height of the thrie beam railing by more than 1" at Connection Detail AA, taper the top of the end of the bridge railing at 4:1 to match the top elevation of the thrie beam rail.
8. For details of End Cap (Type TC), see Standard Plan A77J4.
9. See Standard Plan A77J4 for additional details regarding depth dimension for straight metal box spacer.

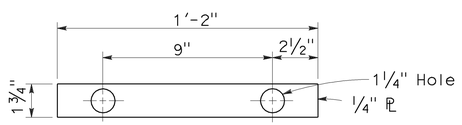

PLATE 'A'

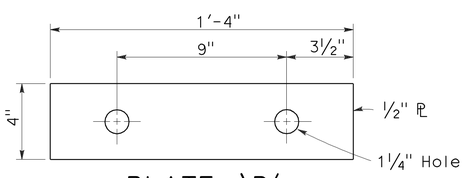

PLATE 'B'
(For backside of connection BB)

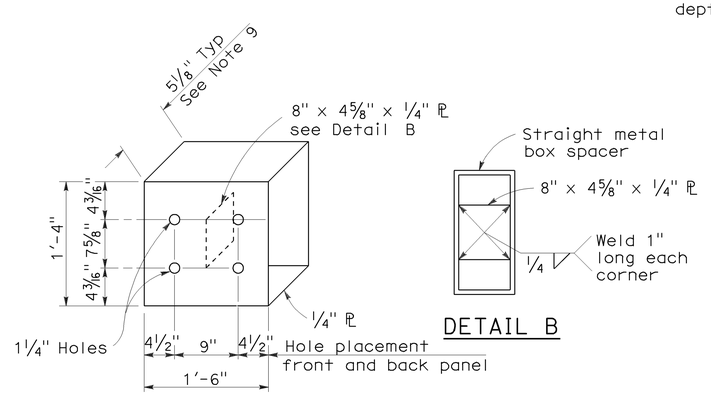

DETAIL A

DETAIL B

STRAIGHT METAL BOX SPACER

STATE OF CALIFORNIA
DEPARTMENT OF TRANSPORTATION

METAL BEAM GUARD RAILING CONNECTIONS TO BRIDGE RAILINGS WITHOUT SIDEWALKS DETAILS No.1

NO SCALE

RSP A77J1 DATED MAY 20, 2011 SUPERSEDES RSP A77J1 DATED JUNE 6, 2008 AND STANDARD PLAN A77J1 DATED MAY 1, 2006 - PAGE 72 OF THE STANDARD PLANS BOOK DATED MAY 2006.

REVISED STANDARD PLAN RSP A77J1

2006 REVISED STANDARD PLAN RSP A77J1

3-10-11

DIST	COUNTY	ROUTE	POST MILES TOTAL PROJECT	SHEET NO.	TOTAL SHEETS
03	Col	5	R21.0/R34.4	23	28

Randell D. Hiatt
REGISTERED CIVIL ENGINEER

June 6, 2008
PLANS APPROVAL DATE

REGISTERED PROFESSIONAL ENGINEER
Randell D. Hiatt
No. C50200
Exp. 6-30-09
CIVIL
STATE OF CALIFORNIA

The State of California or its officers or agents shall not be responsible for the accuracy or completeness of electronic copies of this plan sheet.

To accompany plans dated 1-30-12

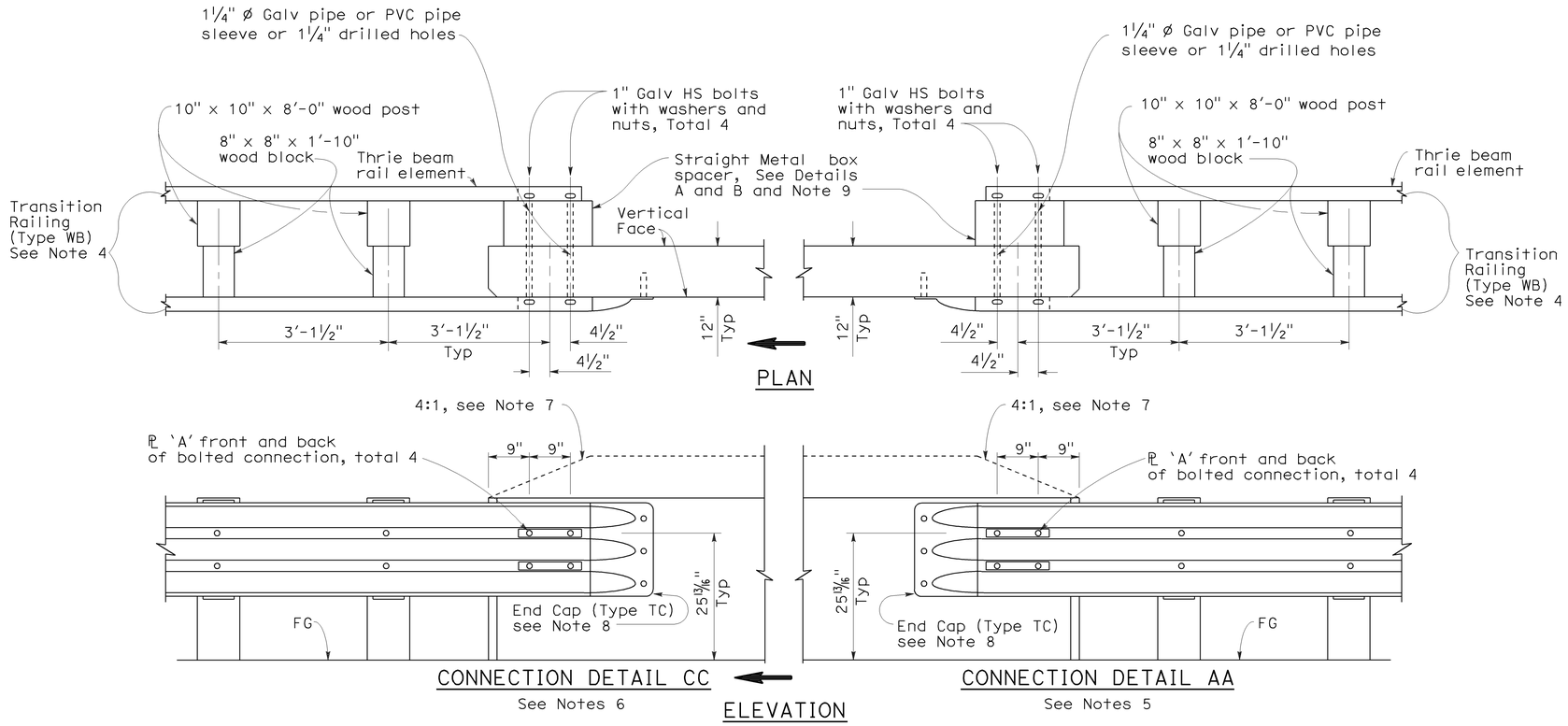

GUARD RAILING CONNECTION TO BRIDGE RAILING WITHOUT SIDEWALK

NOTES:

1. See Revised Standard Plan RSP A77J1 for additional connection details to bridges without sidewalks.
2. Additional details of posts, blocks and hardware are shown on Standard Plan A77B1, A77C1 and A77C2.
3. Direction of adjacent traffic indicated by ⟹.
4. For additional details of Transition Railing (Type WB), see Standard Plan A77J4. Transition Railing (Type WB) transitions the 12 gage w-beam standard railing section of guard railing to a heavier gage nested thrie beam railing section which is connected to the concrete bridge railing.
5. For typical use of Connection Detail AA, see Layout Types 12A and 12B on Revised Standard Plan RSP A77F1, Layout Types 12C and 12D on Standard Plan A77F2, and Layout Type 12E on Revised Standard Plan RSP A77F3.
6. For typical use of Connection Detail CC, see Layout Types 12AA and 12BB on Standard Plan A77F4 and Layout Type 12CC on Standard Plan A77F5.
7. Where the height of the bridge railing exceeds the height of the thrie beam railing by more than 1" at Connection Detail AA and connection Detail CC, taper the top of the end of the bridge railing at 4:1 to match the top elevation of the thrie beam railing.
8. For details of End Cap (Type TC), see Standard Plans A77J4.
9. See Standard Plans A77J4 for additional details regarding depth dimension for straight metal box spacer.

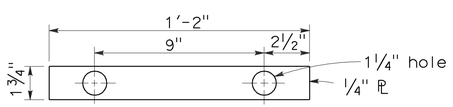

PLATE 'A'

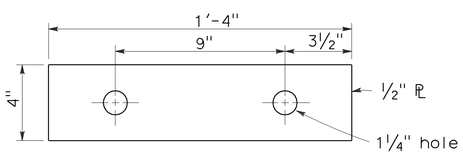

PLATE 'B'
(For backside of connection BB)

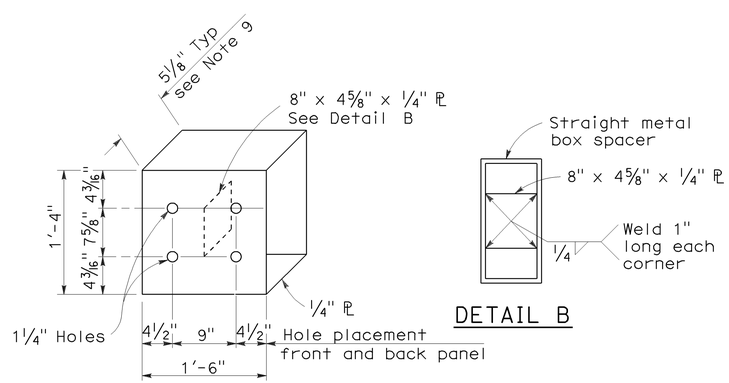

DETAIL A

DETAIL B

STRAIGHT METAL BOX SPACER

STATE OF CALIFORNIA
DEPARTMENT OF TRANSPORTATION

METAL BEAM GUARD RAILING CONNECTIONS TO BRIDGE RAILINGS WITHOUT SIDEWALKS DETAILS No.2

NO SCALE

RSP A77J2 DATED JUNE 6, 2008 SUPERSEDES STANDARD PLAN A77J2 DATED MAY 1, 2006 - PAGE 73 OF THE STANDARD PLANS BOOK DATED MAY 2006.

REVISED STANDARD PLAN RSP A77J2

2006 REVISED STANDARD PLAN RSP A77J2

12-10-07

Dist	COUNTY	ROUTE	POST MILES TOTAL PROJECT	SHEET No.	TOTAL SHEETS
03	Col	5	R21.0/R34.4	24	28

Randell D. Hiatt
REGISTERED CIVIL ENGINEER

May 20, 2011
PLANS APPROVAL DATE

REGISTERED PROFESSIONAL ENGINEER Randell D. Hiatt No. C50200 Exp. 6-30-11 CIVIL STATE OF CALIFORNIA

The State of California or its officers or agents shall not be responsible for the accuracy or completeness of electronic copies of this plan sheet.

To accompany plans dated 1-30-12

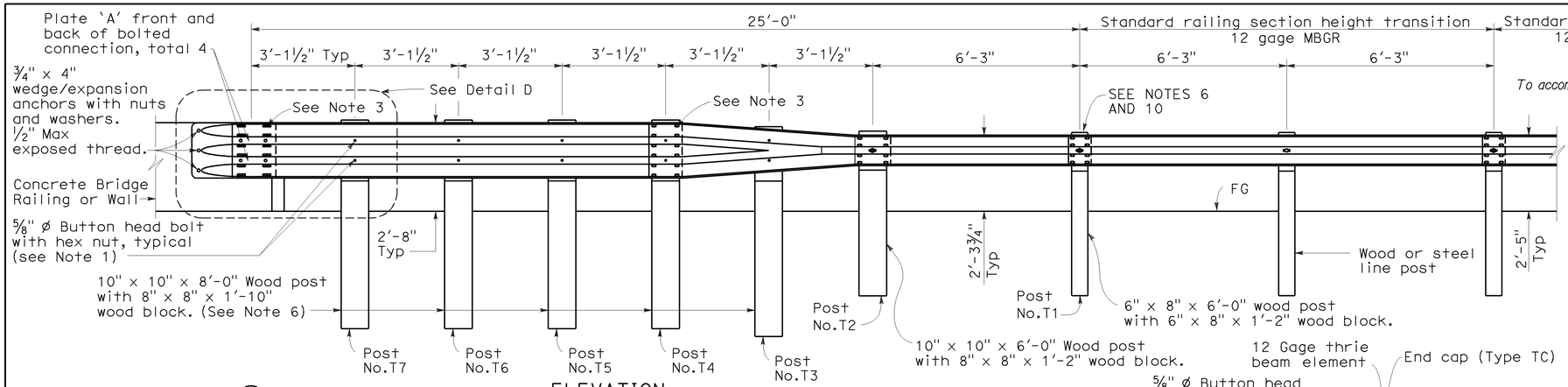

ELEVATION

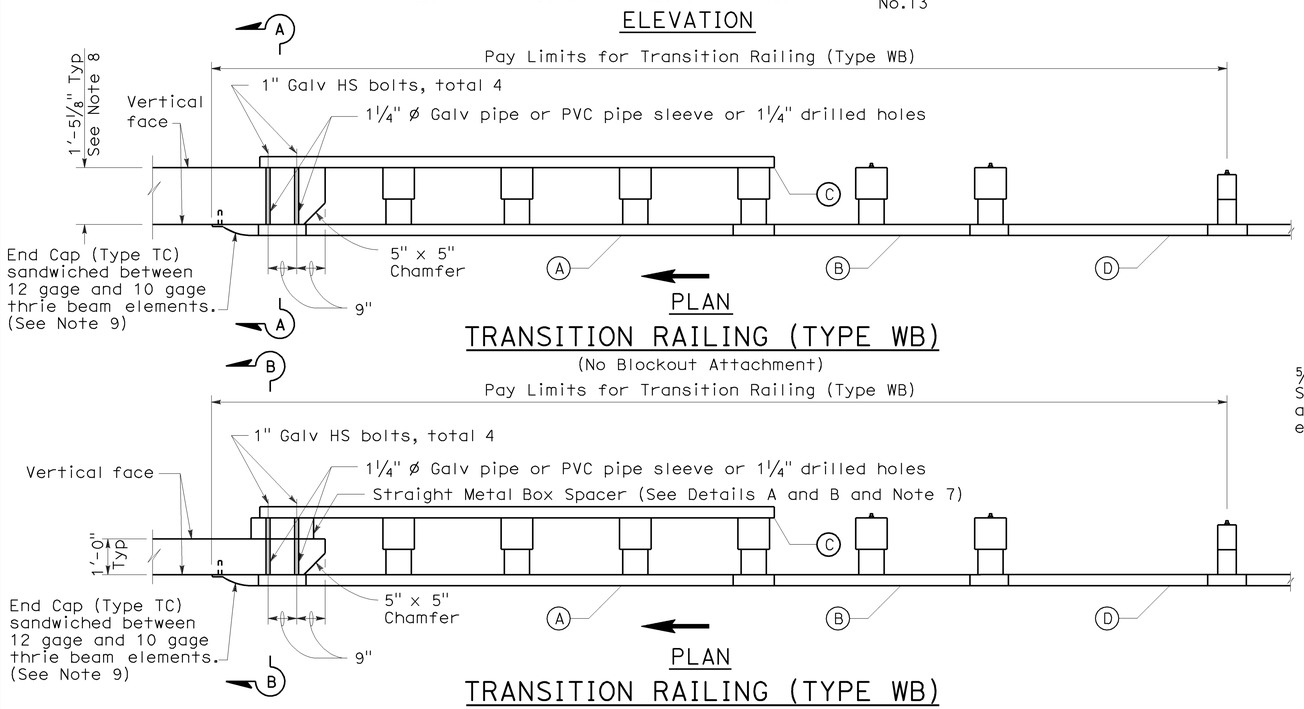

PLAN

TRANSITION RAILING (TYPE WB)

(No Blockout Attachment)

PLAN

TRANSITION RAILING (TYPE WB)

(Blockout Attachment)

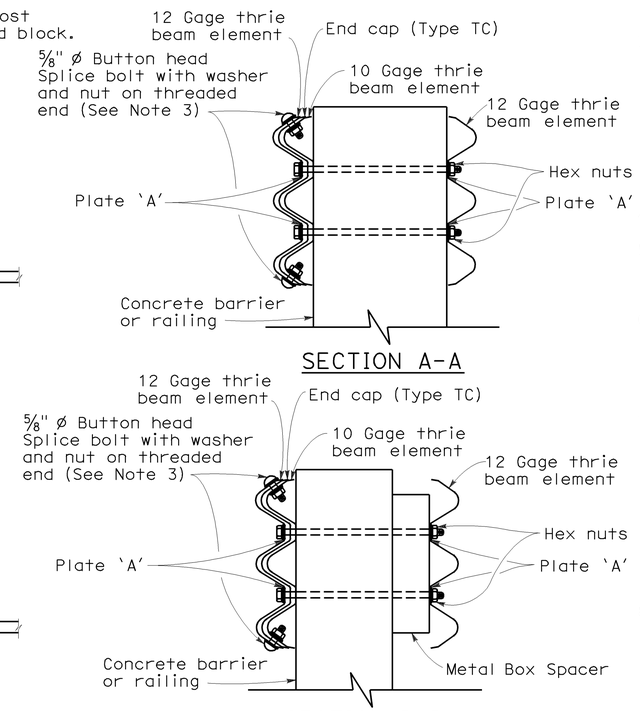

SECTION A-A

SECTION B-B

NOTES:

1. Use ⅝" ø Button head bolts and hex nuts for connections to posts. No washer on rail face for bolted connections to post.
2. The nested rail elements, end cap, and 'W' beam to thrie beam element may be spliced together prior to bolting the elements to the wood post and concrete barrier or railing.
3. Exterior splice bolt holes for rail element splices at Post No. T4 and the connection to the concrete barrier or railing shall be the standard 29/32" x 1⅛" slot size. Interior splice bolt holes at these locations may be increased up to 1¼" ø. Only the top 2 and the bottom 2 splice bolts with washers and nuts are required for rail splices at Post No. T4 and the connection to the concrete barrier or railing.
4. Direction of adjacent traffic indicated by ⟶ .
5. The top elevation of Posts No. T2 through No. T7 shall not project more than 1" above the top elevation of the rail element.
6. Typically, the railing connected to Transition Railing (Type WB) will be either standard railing section of metal beam guard railing with height transition ratio of 120:1 or an approved Caltrans end treatment attached to Post No. T1.
7. The depth of the metal box spacer varies from the 5⅛" to 1½" and is dependent on the width of the concrete railing or wall. The combined dimension for the depth of the metal box spacer plus the width of railing or wall is typically 17⅛". Where the space between the backside of the concrete railing or wall and the rear thrie beam element is less than 1½", metal plates similar to Plate 'A' are to be used as spacers.
8. Where the width of the concrete railing or wall is greater than 17⅛", wood blocks are to be used to fill the space created between the backside of Posts No. T4 through No. T7 and the rear thrie beam element. These wood blocks shall be 8" in width and 1'-2" in length. The dimension between the front thrie beam element and the rear thrie beam element is to match the width of the concrete railing or wall.
9. End cap may be installed over 12 gage and 10 gage thrie beam elements where transition railing is installed on the departure end of bridge railing.
10. Conform standard railing section height to 2'-3¾" at Post No. T1 using height transition ratio of 120:1.

LEGEND

(A) Nested thrie beam elements (one 12 gage element nested over one 10 gage element).

(B) One 10 gage "W" beam to thrie beam element.

(C) One 12 gage thrie beam element.

(D) One 10 gage "W" beam rail element (7'-3½" length)

10 gage = 0.135" thick

12 gage = 0.108" thick

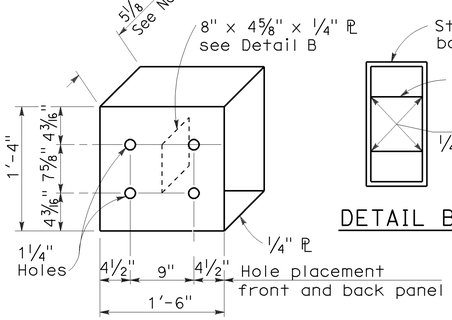

DETAIL A

STRAIGHT METAL BOX SPACER

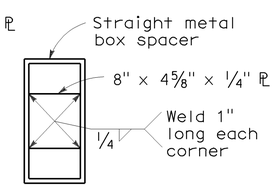

DETAIL B

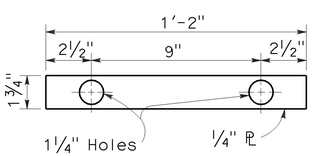

DETAIL C

PLATE 'A'

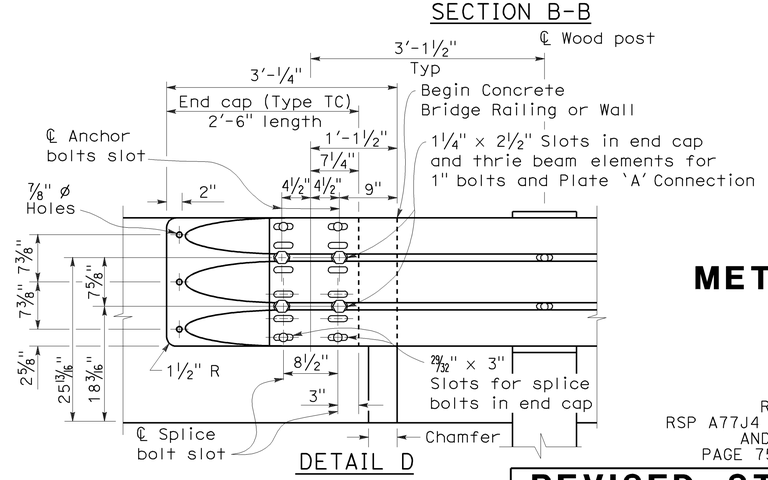

DETAIL D

STATE OF CALIFORNIA
DEPARTMENT OF TRANSPORTATION

METAL BEAM GUARD RAILING TRANSITION RAILING (TYPE WB)

NO SCALE

RSP A77J4 DATED MAY 20, 2011 SUPERSEDES
RSP A77J4 DATED JUNE 5, 2009, RSP A77J4 DATED JUNE 6, 2008
AND STANDARD PLAN A77J4 DATED MAY 1, 2006 -
PAGE 75 OF THE STANDARD PLANS BOOK DATED MAY 2006.

REVISED STANDARD PLAN RSP A77J4

2006 REVISED STANDARD PLAN RSP A77J4

5-14-09

DIST	COUNTY	ROUTE	POST MILES TOTAL PROJECT	SHEET NO.	TOTAL SHEETS
03	Col	5	R21.0/R34.4	25	28

Randell D. Hiatt
REGISTERED CIVIL ENGINEER

June 6, 2008
PLANS APPROVAL DATE

REGISTERED PROFESSIONAL ENGINEER
Randell D. Hiatt
No. C50200
Exp. 6-30-09
CIVIL
STATE OF CALIFORNIA

The State of California or its officers or agents shall not be responsible for the accuracy or completeness of electronic copies of this plan sheet.

To accompany plans dated 1-30-12

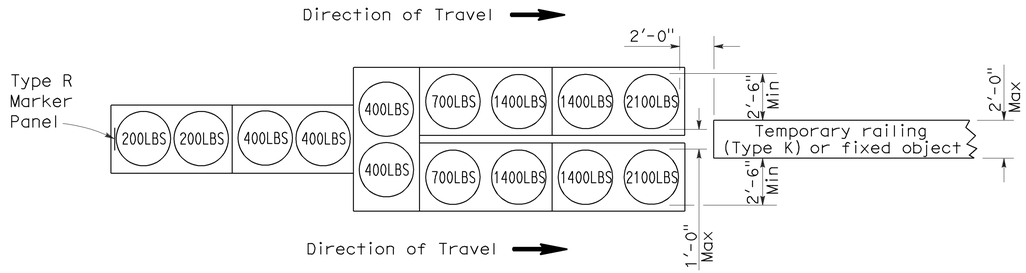

ARRAY 'TU14'

Approach speed 45 mph or more

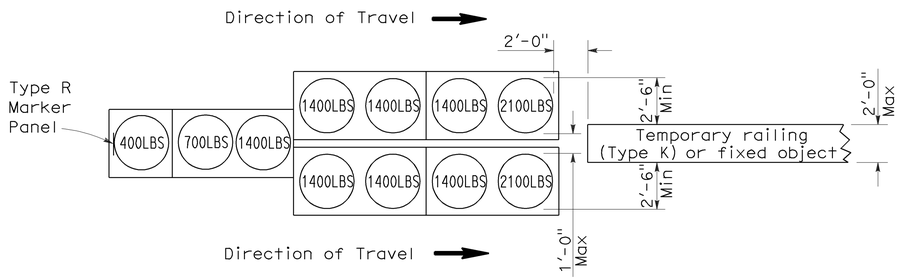

ARRAY 'TU11'

Approach speed less than 45 mph

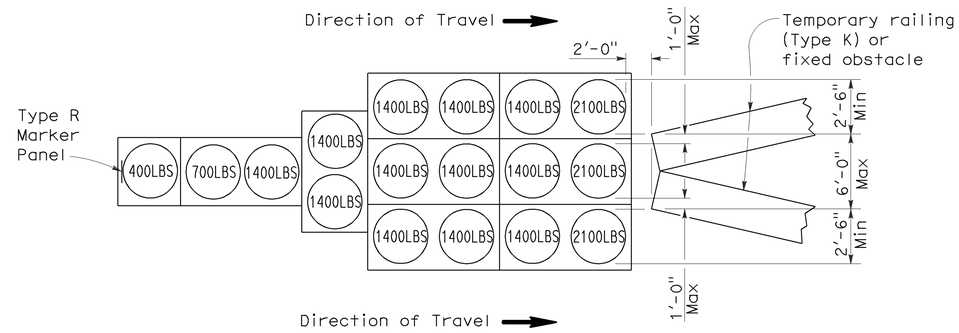

ARRAY 'TU17'

Approach speed less than 45 mph

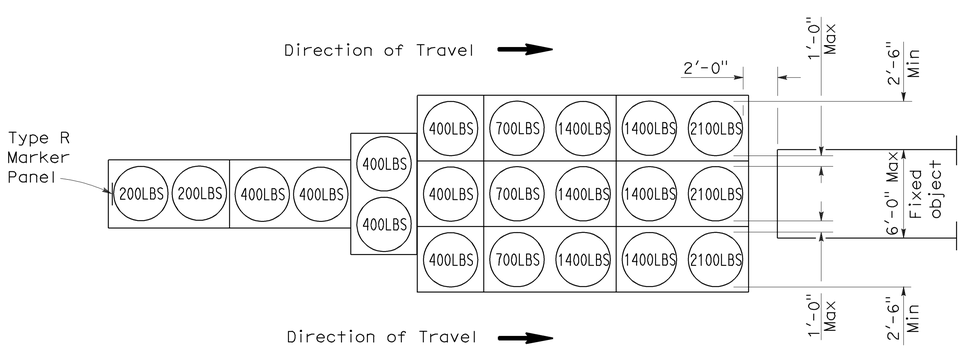

ARRAY 'TU21'

Approach speed 45 mph or more

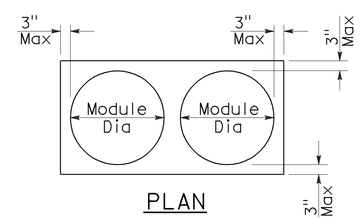

PLAN

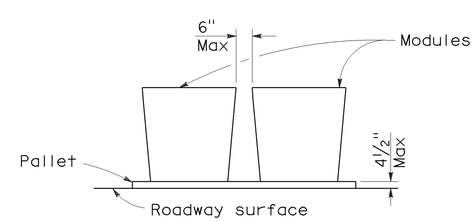

ELEVATION

CRASH CUSHION PALLET DETAIL

See Note 7

NOTES:

1. (XXX) Indicates sand filled module location and weight of sand in pounds for each module. Module spacing is based on the greater diameter of the module.
2. All sand weights are nominal.
3. Temporary crash cushion arrays shall not encroach on the traveled way.
4. Place the top of Type R marker panel 1" below the module lid.
5. Refer to Standard Plan A73B for marker details.
6. Approach speeds indicated conform to NCHRP 350 Report criteria.
7. Use of pallets is optional.

STATE OF CALIFORNIA
DEPARTMENT OF TRANSPORTATION

TEMPORARY CRASH CUSHION, SAND FILLED (UNIDIRECTIONAL)

NO SCALE

RSP T1A DATED JUNE 6, 2008 SUPERSEDES STANDARD PLAN T1A
DATED MAY 1, 2006 - PAGE 211 OF THE STANDARD PLANS BOOK DATED MAY 2006.

REVISED STANDARD PLAN RSP T1A

2006 REVISED STANDARD PLAN RSP T1A

DIST	COUNTY	ROUTE	POST MILES TOTAL PROJECT	SHEET NO.	TOTAL SHEETS
03	Col	5	R21.0/R34.4	26	28

Randell D. Hiatt
REGISTERED CIVIL ENGINEER

June 6, 2008
PLANS APPROVAL DATE

REGISTERED PROFESSIONAL ENGINEER
Randell D. Hiatt
No. C50200
Exp. 6-30-09
CIVIL
STATE OF CALIFORNIA

The State of California or its officers or agents shall not be responsible for the accuracy or completeness of electronic copies of this plan sheet.

To accompany plans dated 1-30-12

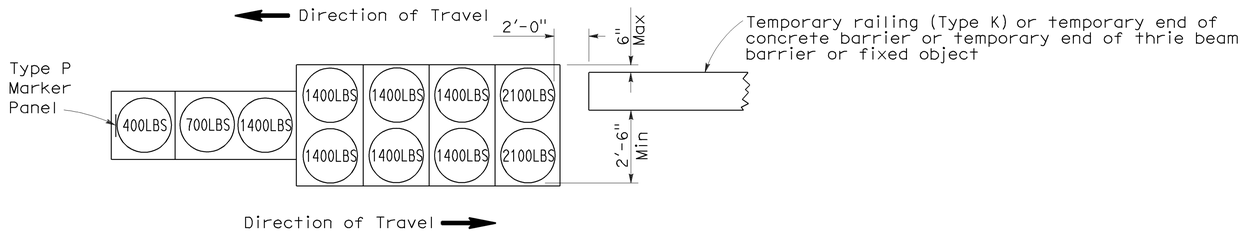

ARRAY 'TB11'

Approach speed less than 45 mph

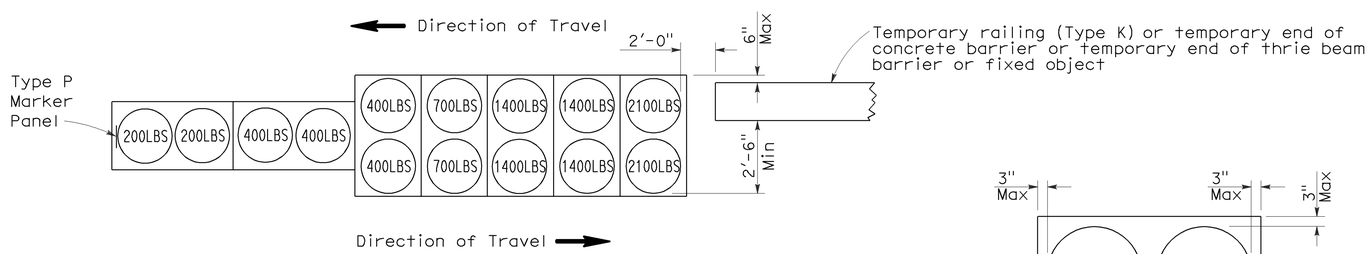

ARRAY 'TB14'

Approach speed 45 mph or more

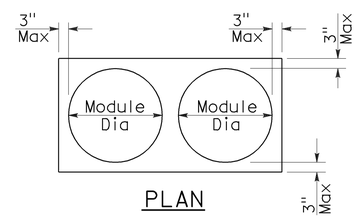

PLAN

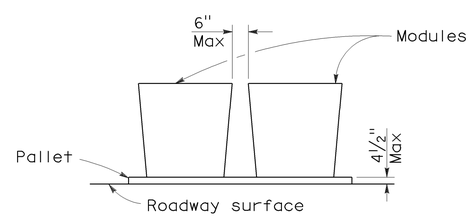

ELEVATION

CRASH CUSHION PALLET DETAIL

See Note 7

NOTES:

1. (XXX) Indicates sand filled module location and weight of sand in pounds for each module. Module spacing is based on the greater diameter of the module.
2. All sand weights are nominal.
3. Temporary crash cushion arrays shall not encroach on the traveled way.
4. Place the Type P marker panel so that the bottom of the panel rests upon the pallet.
5. Refer to Standard Plan A73B for marker details.
6. Approach speeds indicated conform to NCHRP 350 Report criteria.
7. Use of pallets is optional.

STATE OF CALIFORNIA
DEPARTMENT OF TRANSPORTATION

TEMPORARY CRASH CUSHION, SAND FILLED (BIDIRECTIONAL)

NO SCALE

RSP T1B DATED JUNE 6, 2008 SUPERSEDES STANDARD PLAN T1B
DATED MAY 1, 2006 - PAGE 212 OF THE STANDARD PLANS BOOK DATED MAY 2006.

REVISED STANDARD PLAN RSP T1B

2006 REVISED STANDARD PLAN RSP T1B

5-15-08

DIST	COUNTY	ROUTE	POST MILES TOTAL PROJECT	SHEET NO.	TOTAL SHEETS
03	Col	5	R21.0/R34.4	27	28

Randell D. Hiatt
REGISTERED CIVIL ENGINEER

June 6, 2008
PLANS APPROVAL DATE

REGISTERED PROFESSIONAL ENGINEER
Randell D. Hiatt
No. C50200
Exp. 6-30-09
CIVIL
STATE OF CALIFORNIA

The State of California or its officers or agents shall not be responsible for the accuracy or completeness of electronic copies of this plan sheet.

To accompany plans dated 1-30-12

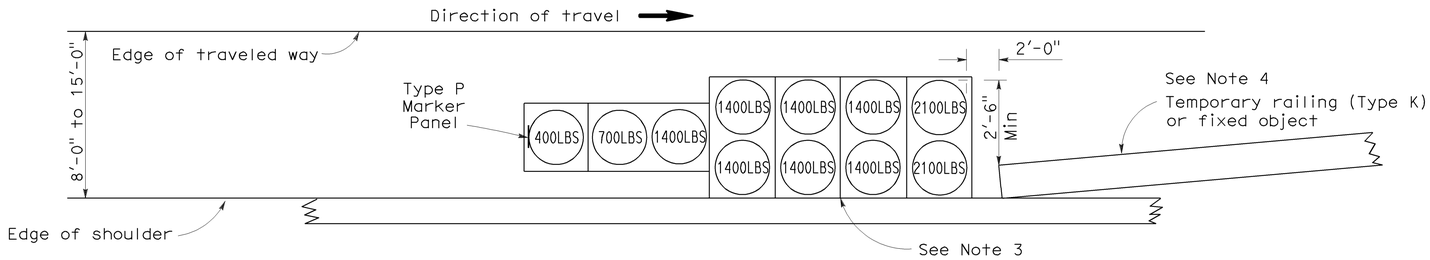

ARRAY 'TS11'

Approach speed less than 45 mph
See Note 9

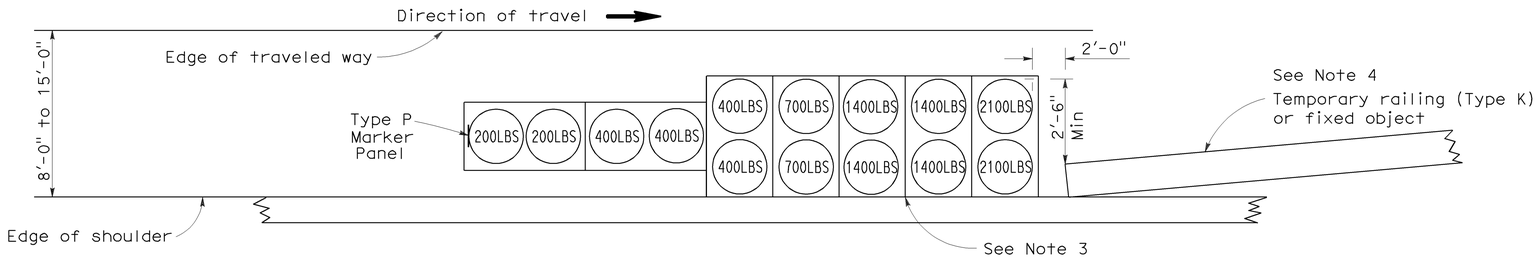

ARRAY 'TS14'

Approach speed 45 mph or more
See Note 9

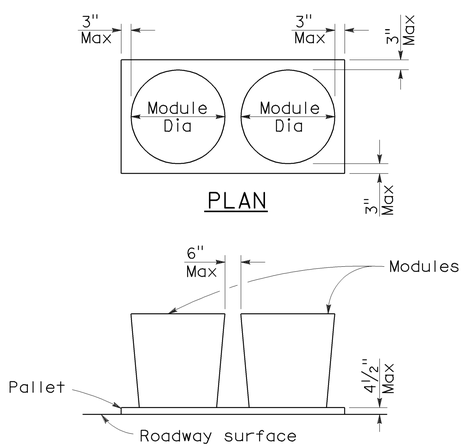

CRASH CUSHION PALLET DETAIL

See Note 11

NOTES:

1. (XXX) Indicates sand filled module location and weight of sand in pounds for each module. Module spacing is based on the greater diameter of the module.
2. All sand weights are nominal.
3. The temporary crash cushion arrays shown on this plan shall be used only in locations where there will be traffic on one side of the temporary crash cushion array.
4. If the fixed object or approach end of the temporary railing is less than 15'-0" from the edge of traveled way, a temporary crash cushion is required in a construction or work zone.
5. Temporary crash cushion arrays shall not encroach on the traveled way.
6. Arrays for median shoulders shall conform to details shown on this plan for outside shoulders.
7. Place the Type P marker panel so that the bottom of the panel rests upon the pallet and faces traffic.
8. Refer to Standard Plan A73B for marker details.
9. For shoulder widths less than 8'-0", appropriate approved crash cushion protection, other than sand filled modules, shall be provided at fixed objects and at approach ends of temporary railing. The specific type of crash cushion shall be as shown on the project plans or as specified in the Special Provisions, or if not shown on the project plans or specified in the Special Provisions, shall be as approved by the Engineer.
10. Approach speeds indicated conform to NCHRP 350 Report criteria.
11. Use of pallets is optional.

STATE OF CALIFORNIA
DEPARTMENT OF TRANSPORTATION

TEMPORARY CRASH CUSHION, SAND FILLED (SHOULDER INSTALLATIONS)

NO SCALE

RSP T2 DATED JUNE 6, 2008 SUPERSEDES STANDARD PLAN T2
DATED MAY 1, 2006 - PAGE 213 OF THE STANDARD PLANS BOOK DATED MAY 2006.

REVISED STANDARD PLAN RSP T2

2006 REVISED STANDARD PLAN RSP T2

5-15-08

Dist	COUNTY	ROUTE	POST MILES TOTAL PROJECT	SHEET No.	TOTAL SHEETS
03	Col	5	R21.0/R34.4	28	28

Randell D. Hiatt
REGISTERED CIVIL ENGINEER

May 20, 2011
PLANS APPROVAL DATE

REGISTERED PROFESSIONAL ENGINEER
Randell D. Hiatt
No. C50200
Exp. 6-30-11
CIVIL
STATE OF CALIFORNIA

The State of California or its officers or agents shall not be responsible for the accuracy or completeness of electronic copies of this plan sheet.

To accompany plans dated 1-30-12

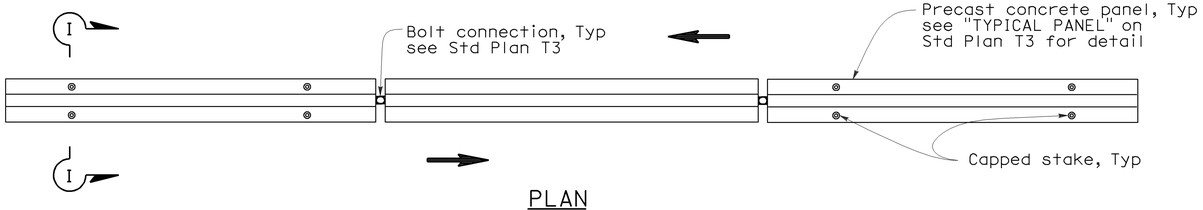

PLAN

RAILING STAKING CONFIGURATION FOR TWO-WAY TRAFFIC

See Note 1

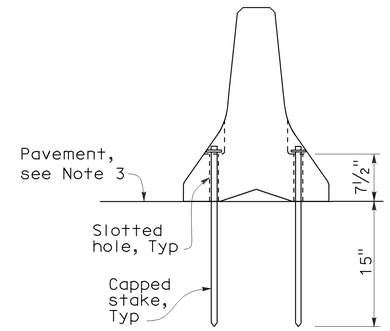

SECTION I-I

NOTES:

1. Where Type K Temporary Railing is placed as a temporary or long term barrier in two-way traffic on highways with less than 24" from the edge of traveled way, use four capped stakes per every other panel with end panels staked.
2. Where Type K Temporary Railing is placed 3" to 24" from the edge of an excavation on highways, use two capped stakes per panel along the traffic side.
3. Staked Type K Temporary Railing must be supported by at least 4" thick concrete, hot mix asphalt or existing asphalt concrete pavement.
4. The minimum yield strength for the washer must be 60,000 psi.
5. Direction of adjacent traffic indicated by ⟹.

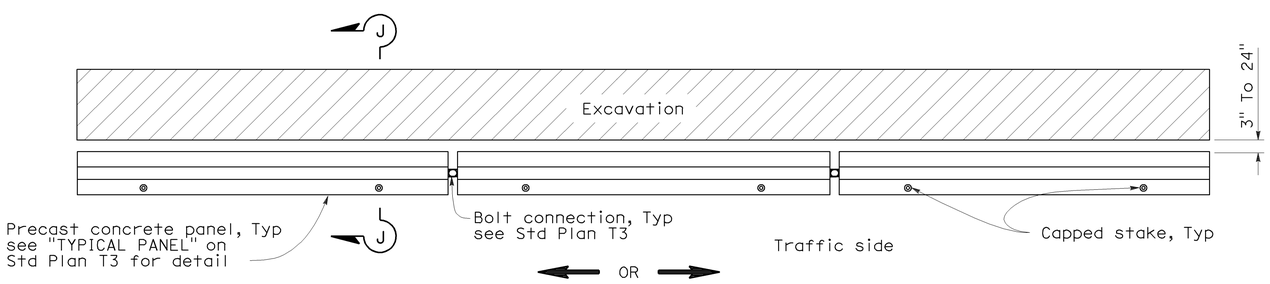

PLAN

RAILING STAKING CONFIGURATION ADJACENT TO AN EXCAVATION

See Note 2

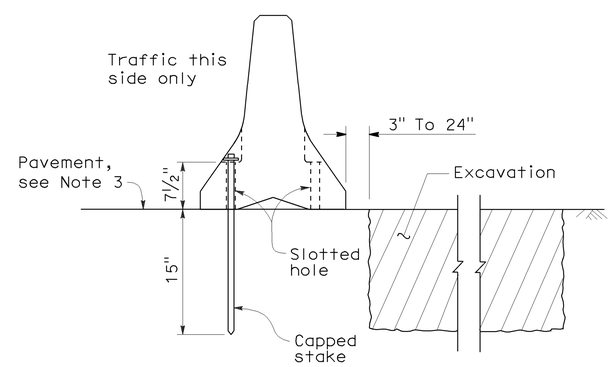

SECTION J-J

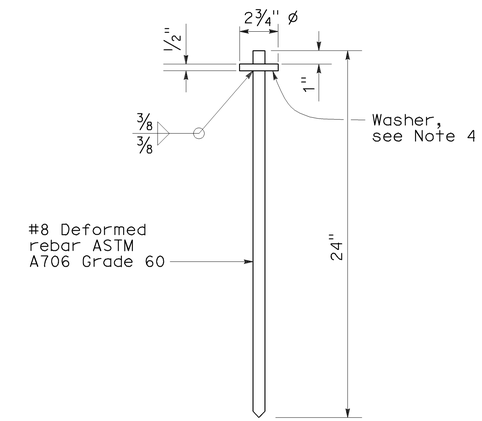

CAPPED STAKE DETAIL

STATE OF CALIFORNIA
DEPARTMENT OF TRANSPORTATION

TEMPORARY RAILING (TYPE K)

NO SCALE

NSP T3A DATED MAY 20, 2011 SUPPLEMENTS
THE STANDARD PLANS BOOK DATED MAY 2006.

NEW STANDARD PLAN NSP T3A

2006 NEW STANDARD PLAN NSP T3A