Dist	COUNTY	ROUTE	POST MILES TOTAL PROJECT	SHEET No.	TOTAL SHEETS
03	But	32	11.3/R15.5	1	23

INDEX OF PLANS

SHEET No.	DESCRIPTION
1	TITLE AND LOCATION MAP
2	TYPICAL CROSS SECTIONS
3-4	CONSTRUCTION DETAILS
5	CONSTRUCTION AREA SIGNS
6-8	SUMMARY OF QUANTITIES
9-14	ELECTRICAL PLANS
15-17	TRAFFIC CONTROL SYSTEMS
18-23	REVISED STANDARD PLANS

THE STANDARD PLANS LIST APPLICABLE TO THIS CONTRACT IS INCLUDED IN THE NOTICE TO BIDDERS AND SPECIAL PROVISIONS BOOK.

STATE OF CALIFORNIA

DEPARTMENT OF TRANSPORTATION

PROJECT PLANS FOR CONSTRUCTION ON

STATE HIGHWAY

IN BUTTE COUNTY
IN AND NEAR CHICO
FROM EL MONTE AVENUE TO 0.3 MILE EAST OF HUMBOLDT ROAD

TO BE SUPPLEMENTED BY STANDARD PLANS DATED 2010

LOCATION MAP

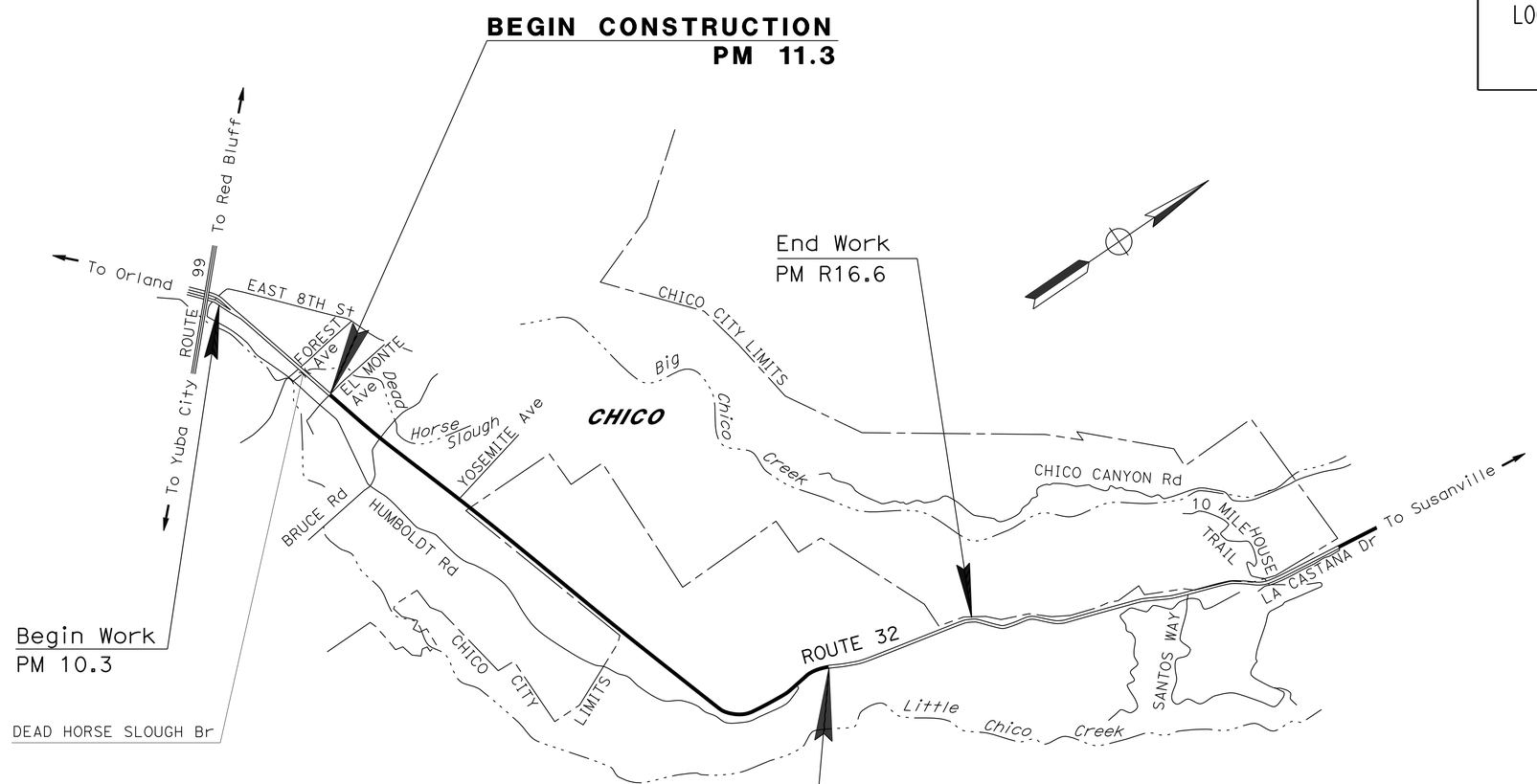

NO SCALE

THE CONTRACTOR SHALL POSSESS THE CLASS (OR CLASSES) OF LICENSE AS SPECIFIED IN THE "NOTICE TO BIDDERS."

Darlene Wulff 2-26-13
PROJECT ENGINEER DATE
REGISTERED CIVIL ENGINEER

March 4, 2013
PLANS APPROVAL DATE

REGISTERED PROFESSIONAL ENGINEER
DARLENE WULFF
No. C77879
Exp. 6-30-13
CIVIL
STATE OF CALIFORNIA

THE STATE OF CALIFORNIA OR ITS OFFICERS OR AGENTS SHALL NOT BE RESPONSIBLE FOR THE ACCURACY OR COMPLETENESS OF SCANNED COPIES OF THIS PLAN SHEET.

CONTRACT No.	03-4M1604
PROJECT ID	0300020056

LAST REVISION 02-21-13
DATE PLOTTED => 28-FEB-2013
TIME PLOTTED => 10:50

PROJECT MANAGER DARLENE WULFF
DESIGN ENGINEER NIK BEACH

Dist	COUNTY	ROUTE	POST MILES TOTAL PROJECT	SHEET No.	TOTAL SHEETS
03	But	32	11.3/R15.5	2	23

Darlene Wulff 2-26-13
REGISTERED CIVIL ENGINEER DATE

3-4-13
PLANS APPROVAL DATE

REGISTERED PROFESSIONAL ENGINEER DARLENE WULFF No. C77879 Exp. 6-30-13 CIVIL STATE OF CALIFORNIA

THE STATE OF CALIFORNIA OR ITS OFFICERS OR AGENTS SHALL NOT BE RESPONSIBLE FOR THE ACCURACY OR COMPLETENESS OF SCANNED COPIES OF THIS PLAN SHEET.

NOTES:

1. DIMENSIONS OF THE PAVEMENT STRUCTURES (STRUCTURAL SECTIONS) ARE SUBJECT TO TOLERANCES SPECIFIED IN THE STANDARD SPECIFICATIONS.
2. SEE CONSTRUCTION DETAILS AND SUMMARY OF QUANTITIES FOR DIMENSIONS AND LIMITS OF SHOULDER BACKING.
3. *REPLACE ASPHALT CONCRETE SURFACING WORK NOT CONTINUOUS. LOCATIONS AND DIMENSIONS VARY. SEE SUMMARY OF QUANTITIES FOR LOCATIONS AND DIMENSIONS.
4. SEE SUMMARY OF QUANTITIES FOR TYPE AND LIMITS OF HOT MIX ASPHALT DIKE WORK.
5. EXISTING UTILITY FACILITIES HAVE NOT BEEN PLOTTED ON THESE PLANS.

ABBREVIATIONS:

CIR - COLD IN-PLACE RECYCLING
ISM - IMPORTED SUBBASE MATERIAL

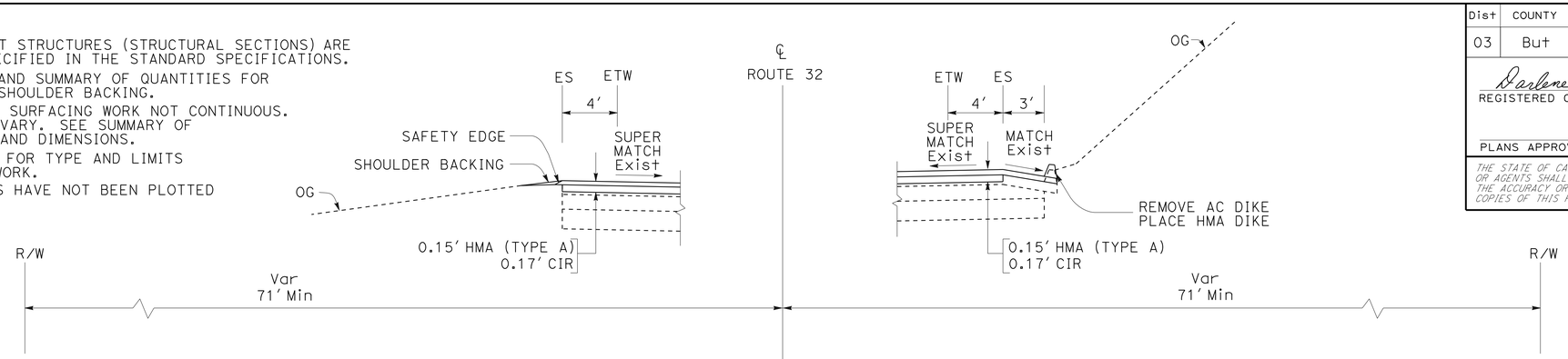

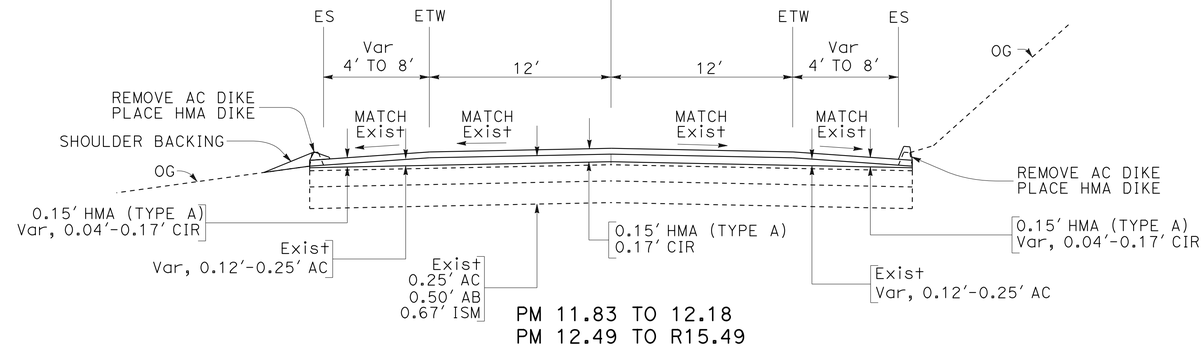

PM 11.83 TO 12.18
PM 12.49 TO R15.49

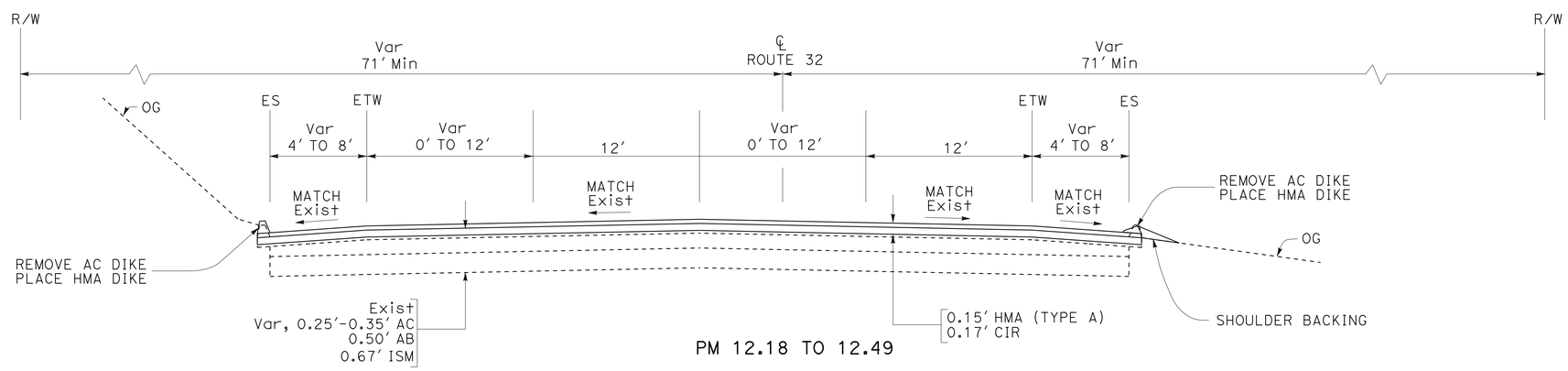

PM 12.18 TO 12.49

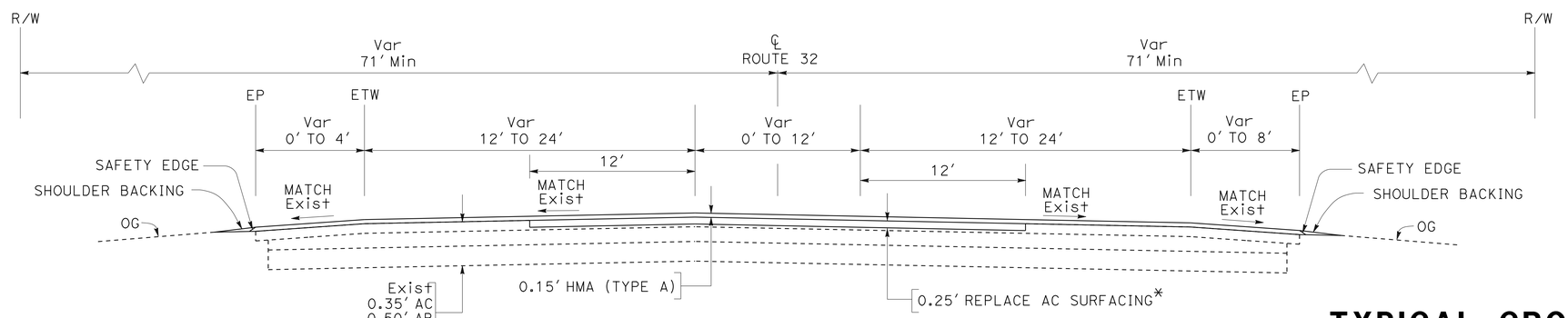

PM 11.27 TO 11.83

TYPICAL CROSS SECTIONS

NO SCALE

X-1

REVISED BY	DATE REVISED
NIK BEACH	DARLENE WULFF
CALCULATED-DESIGNED BY	CHECKED BY
FUNCTIONAL SUPERVISOR	DARLENE WULFF

STATE OF CALIFORNIA - DEPARTMENT OF TRANSPORTATION
Caltrans® MAINTENANCE DESIGN

LAST REVISION 02-27-13 | DATE PLOTTED => 28-FEB-2013 | TIME PLOTTED => 10:50

Dist	COUNTY	ROUTE	POST MILES TOTAL PROJECT	SHEET No.	TOTAL SHEETS
03	But	32	11.3/R15.5	3	23

Darlene Wulff 2-26-13
REGISTERED CIVIL ENGINEER DATE

3-4-13
PLANS APPROVAL DATE

REGISTERED PROFESSIONAL ENGINEER DARLENE WULFF No. C77879 Exp. 6-30-13 CIVIL STATE OF CALIFORNIA

THE STATE OF CALIFORNIA OR ITS OFFICERS OR AGENTS SHALL NOT BE RESPONSIBLE FOR THE ACCURACY OR COMPLETENESS OF SCANNED COPIES OF THIS PLAN SHEET.

LEGEND:

E - DELINEATOR (CLASS 1) - TYPE E

F - DELINEATOR (CLASS 1) - TYPE F

- COLD PLANE AC Pvmt (0.15')

- COLD PLANE AC Pvmt (CONFORM, 0' TO 0.15')

ABBREVIATION:

CIR - COLD IN-PLACE RECYCLING

NOTE:

1. EXISTING UTILITY FACILITIES HAVE NOT BEEN PLOTTED ON THESE PLANS.

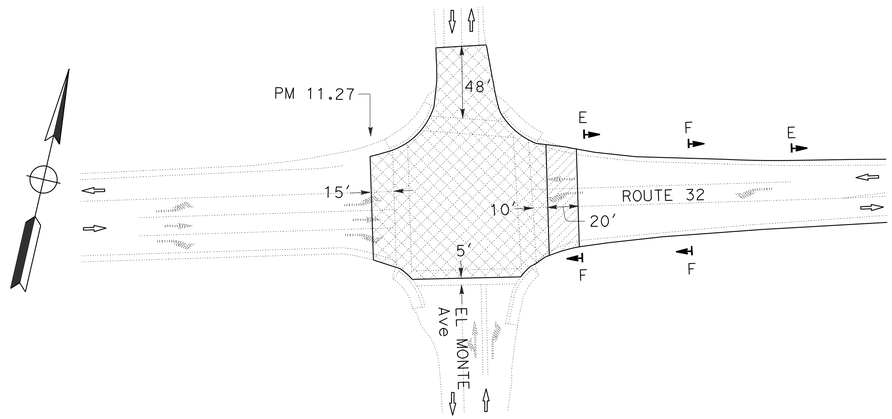

HMA PAVING CONFORM AND DELINEATORS

BEGIN CONSTRUCTION

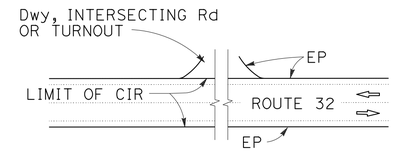

CIR LIMITS

AT INTERSECTING ROADS, DRIVEWAYS AND TURNOUTS

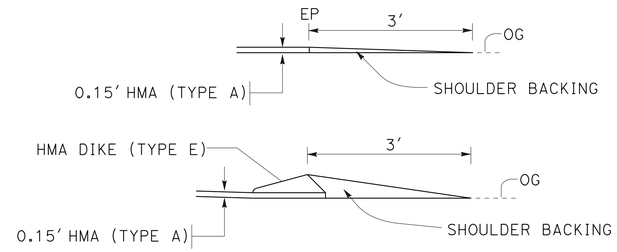

SHOULDER BACKING CONSTRUCTION

SECTION VIEW

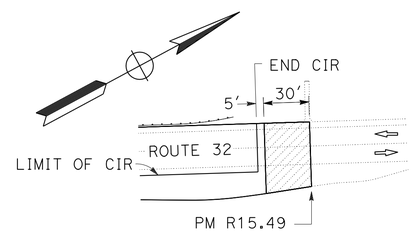

HMA PAVING CONFORM

END CONSTRUCTION

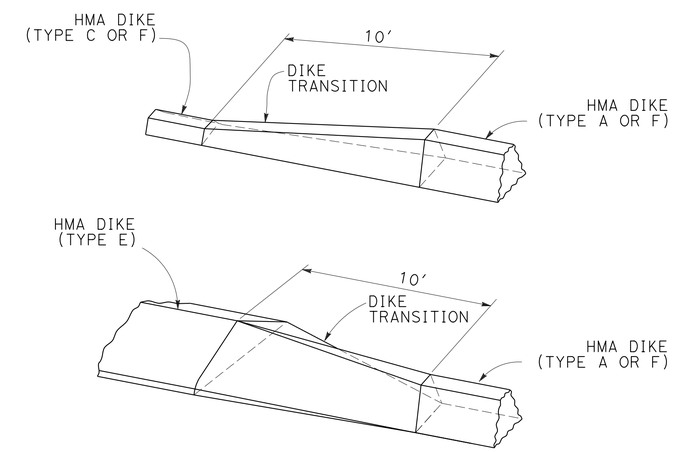

DIKE TRANSITIONS

ISOMETRIC VIEW

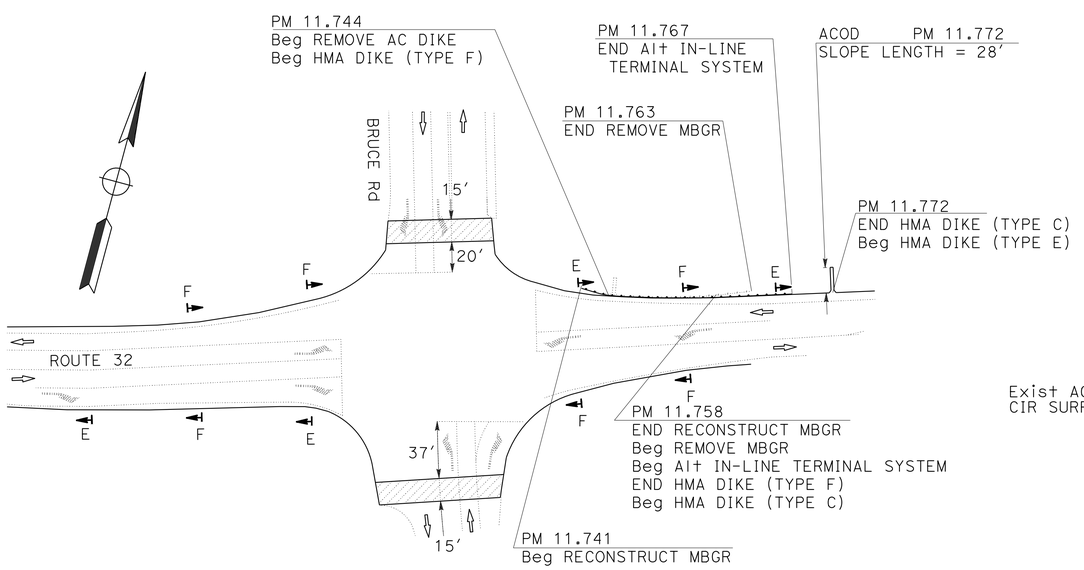

HMA PAVING CONFORMS, DELINEATORS, MBGR, ACOD AND DIKE *

BRUCE ROAD

*SEE SUMMARY OF QUANTITIES FOR OTHER AC DIKE REMOVAL AND HMA DIKE PLACEMENT NOT SHOWN WITHIN THE LIMITS OF THIS DETAIL.

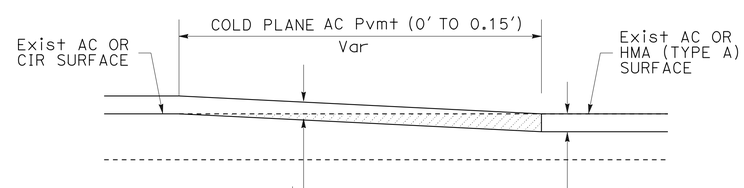

HMA PAVING CONFORM

PROFILE VIEW

CONSTRUCTION DETAILS

NO SCALE

C-1

STATE OF CALIFORNIA - DEPARTMENT OF TRANSPORTATION
Caltrans MAINTENANCE DESIGN

FUNCTIONAL SUPERVISOR: DARLENE WULFF
CALCULATED-DESIGNED BY: NIK BEACH
CHECKED BY: DARLENE WULFF
REVISED BY
DATE REVISED

LAST REVISION 02-27-13 | DATE PLOTTED => 28-FEB-2013 | TIME PLOTTED => 10:50

Dist	COUNTY	ROUTE	POST MILES TOTAL PROJECT	SHEET No.	TOTAL SHEETS
03	But	32	11.3/R15.5	4	23

Darlene Wulff 2-26-13
REGISTERED CIVIL ENGINEER DATE

3-4-13
PLANS APPROVAL DATE

REGISTERED PROFESSIONAL ENGINEER
DARLENE WULFF
No. C77879
Exp. 6-30-13
CIVIL
STATE OF CALIFORNIA

THE STATE OF CALIFORNIA OR ITS OFFICERS OR AGENTS SHALL NOT BE RESPONSIBLE FOR THE ACCURACY OR COMPLETENESS OF SCANNED COPIES OF THIS PLAN SHEET.

NOTE:

1. EXISTING UTILITY FACILITIES HAVE NOT BEEN PLOTTED ON THESE PLANS.

LOCATION/DESCRIPTION	a =	b =
PM 12.39 Lt, YOSEMITE Ave	40′	15′
PM 13.68 Lt, Dwy	100′	0′
PM 15.21 Rt, HUMBOLDT Rd	100′	15′

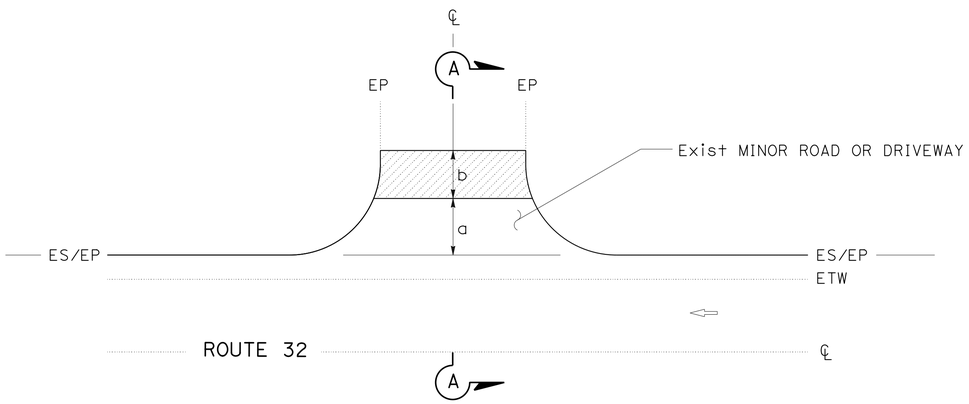

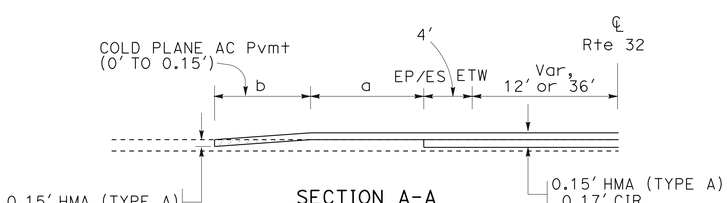

SECTION A-A
(IF b > 0′)

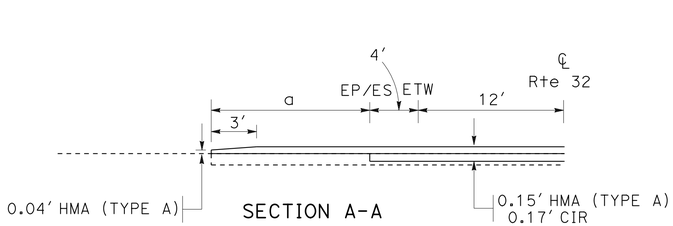

SECTION A-A
(IF b = 0′)

MINOR ROAD AND DRIVEWAY PAVING LIMITS

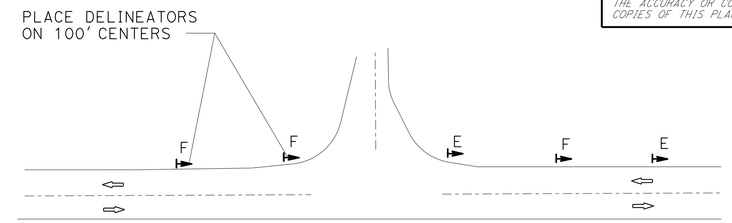

DELINEATOR PLACEMENT

PM 12.39 Lt - YOSEMITE Ave

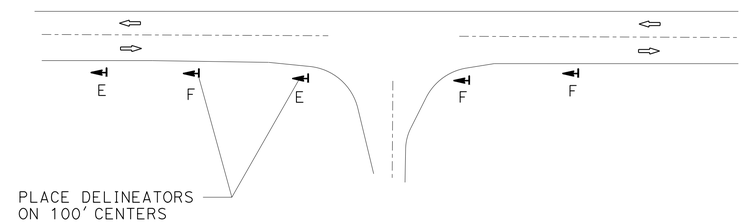

DELINEATOR PLACEMENT

PM 15.21 Rt - HUMBOLDT Rd

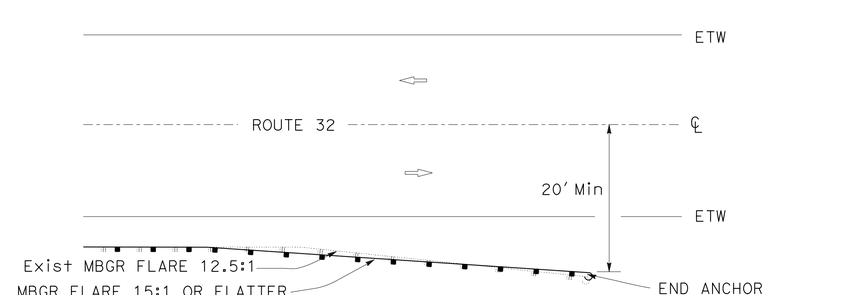

METAL BEAM GUARD RAILING FLARE - TYPICAL

CONSTRUCTION DETAILS

NO SCALE

C-2

STATE OF CALIFORNIA - DEPARTMENT OF TRANSPORTATION
Caltrans®
MAINTENANCE DESIGN

FUNCTIONAL SUPERVISOR: DARLENE WULFF
CALCULATED-DESIGNED BY: NIK BEACH
CHECKED BY: DARLENE WULFF
REVISED BY
DATE REVISED

LAST REVISION 02-27-13
DATE PLOTTED => 28-FEB-2013
TIME PLOTTED => 10:50

Dist	COUNTY	ROUTE	POST MILES TOTAL PROJECT	SHEET No.	TOTAL SHEETS
03	But	32	11.3/R15.5	5	23

Darlene Wulff 2-26-13
REGISTERED CIVIL ENGINEER DATE

3-4-13
PLANS APPROVAL DATE

REGISTERED PROFESSIONAL ENGINEER
DARLENE WULFF
No. C77879
Exp. 6-30-13
CIVIL
STATE OF CALIFORNIA

THE STATE OF CALIFORNIA OR ITS OFFICERS OR AGENTS SHALL NOT BE RESPONSIBLE FOR THE ACCURACY OR COMPLETENESS OF SCANNED COPIES OF THIS PLAN SHEET.

STATIONARY MOUNTED CONSTRUCTION AREA SIGNS

SIGN LETTER	SIGN CODE FEDERAL	SIGN CODE CALIFORNIA	PANEL SIZE	SIGN MESSAGE	NUMBER OF POST AND SIZE	NUMBER OF SIGNS
A	G20-1[Spec](4)		60" x 30"	ROAD WORK NEXT 4 MILES	2 - 4" x 6"	2
B		C40(Mod)	48" x 36"	TRAFFIC FINES DOUBLED IN WORK ZONES	1 - 4" x 6"	2
C	W20-1	C23	48" x 48"	ROAD WORK AHEAD	1 - 6" x 6"	6
D	G20-2	C14	36" x 18"	END ROAD WORK	1 - 4" x 4"	8

NOTES:
1. EXACT SIGN LOCATIONS TO BE DETERMINED BY THE ENGINEER.
2. EXISTING UTILITY FACILITIES HAVE NOT BEEN PLOTTED ON THESE PLANS.

LEGEND

<CA> CALIFORNIA SIGN CODE

SIGN DETAILS

A G20-1[Spec](4)

ROAD WORK
NEXT 4 MILES

6" C SERIES LETTERS

60"X30"

RETROREFLECTIVE ORANGE BACKGROUND WITH BLACK LEGEND AND BORDER.

B C40(Mod)<CA>

TRAFFIC FINES
DOUBLED IN
WORK ZONES

4" D SERIES LETTERS

48"X36"

RETROREFLECTIVE WHITE BACKGROUND WITH BLACK LEGEND AND BORDER.

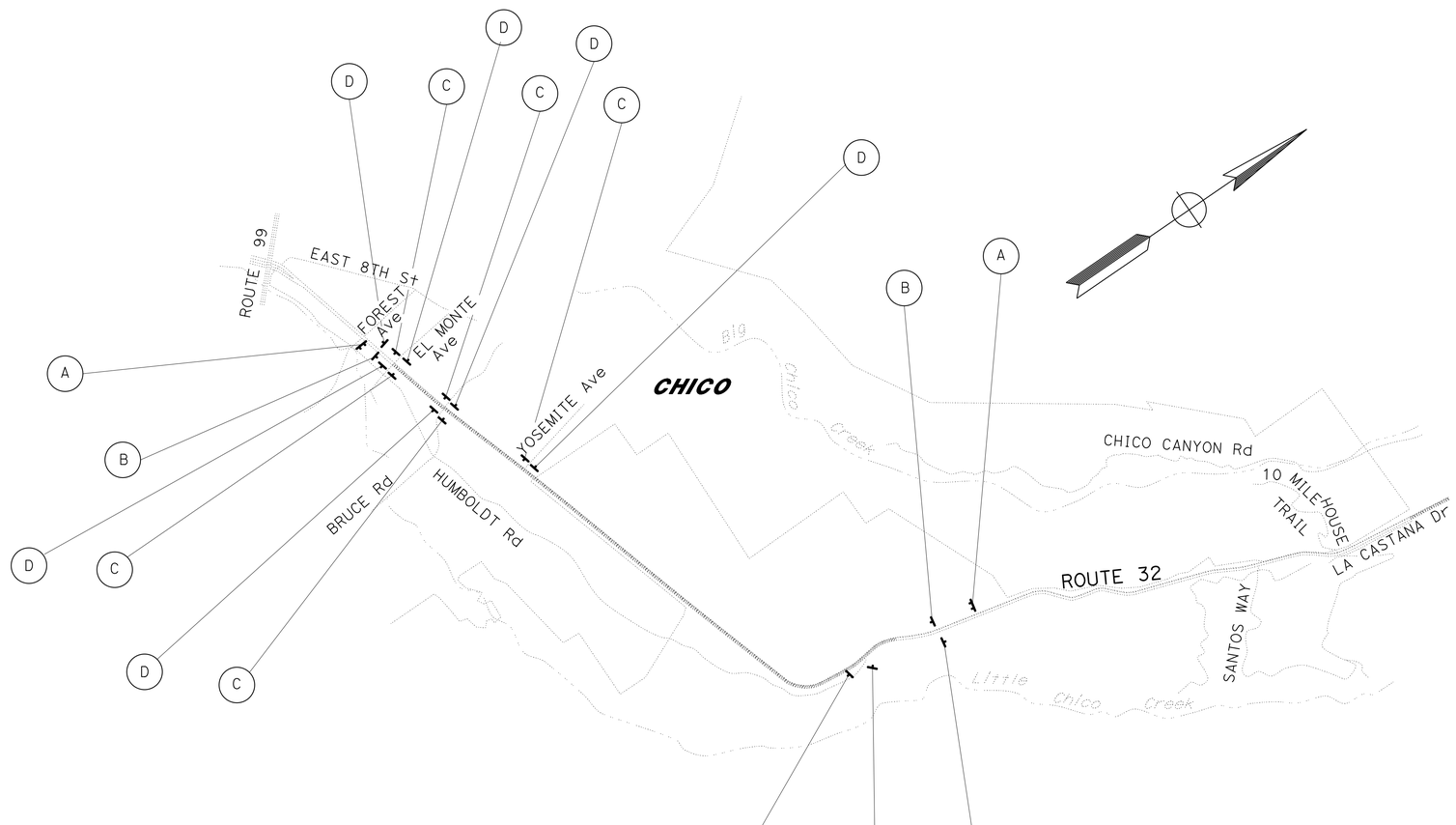

CONSTRUCTION AREA SIGNS

NO SCALE

CS-1

STATE OF CALIFORNIA - DEPARTMENT OF TRANSPORTATION
Caltrans
MAINTENANCE DESIGN

FUNCTIONAL SUPERVISOR: DARLENE WULFF
CALCULATED-DESIGNED BY: NIK BEACH
CHECKED BY: DARLENE WULFF
REVISED BY
DATE REVISED

LAST REVISION 02-12-13
DATE PLOTTED => 28-FEB-2013
TIME PLOTTED => 10:50

Dist	COUNTY	ROUTE	POST MILES TOTAL PROJECT	SHEET No.	TOTAL SHEETS
03	But	32	11.3/R15.5	6	23

Darlene Wulff 2-26-13
REGISTERED CIVIL ENGINEER DATE

3-4-13
PLANS APPROVAL DATE

REGISTERED PROFESSIONAL ENGINEER
DARLENE WULFF
No. C77879
Exp. 6-30-13
CIVIL
STATE OF CALIFORNIA

THE STATE OF CALIFORNIA OR ITS OFFICERS OR AGENTS SHALL NOT BE RESPONSIBLE FOR THE ACCURACY OR COMPLETENESS OF SCANNED COPIES OF THIS PLAN SHEET.

TRAFFIC LINE AND PAVEMENT MARKING REMOVAL

LOCATION/ DESCRIPTION	REMOVE THERMOPLASTIC PAVEMENT MARKING						REMOVE THERMOPLASTIC TRAFFIC STRIPE	NOTES
	WORDS			ARROWS		LIMIT LINE	DETAIL 38	
	"STOP"	"SIGNAL"	"AHEAD"	TYPE I 24'-0"	TYPE III	1'-0" WHITE LINE	8" WHITE LINE	
	SQFT						LF	
EL MONTE Ave				31	84		340	1-TYPE I ARROW, 2-TYPE III (L) ARROWS, 170' DETAIL 38
BRUCE Rd		32	31		252	164	866	1 - "SIGNAL", 1 - "AHEAD", 3-TYPE III (L) ARROWS, 3-TYPE III (R) ARROWS, 164' LIMIT LINE, 433' DETAIL 38
YOSEMITE Ave	44				168	40	96	2 - "STOP", 2-TYPE III (L) ARROWS, 2-TYPE III (R) ARROWS, 40' LIMIT LINE, 48' DETAIL 38
HUMBOLDT Rd	22					42		1 - "STOP", 42' LIMIT LINE
SUBTOTAL	66	32	31	31	504	246	1302	
TOTAL	910						1302	

PAVEMENT MARKING

LOCATION/ DESCRIPTION	THERMOPLASTIC PAVEMENT MARKING							NOTES
	WORDS			ARROWS		CROSSWALK* AND LIMIT LINE		
	"STOP"	"SIGNAL"	"AHEAD"	TYPE I 24'-0"	TYPE III	1'-0" WHITE LINE	1'-0" YELLOW LINE	
	SQFT							
EL MONTE Ave				62	168		580	2-TYPE I ARROWS, 3-TYPE III (L) ARROWS, 1-TYPE III (R) ARROW, 580' CROSSWALK LINE
BRUCE Rd		64	62		546	200		2 - "SIGNAL", 2 - "AHEAD", 8-TYPE III (L) ARROWS, 5-TYPE III (R) ARROWS, 200' LIMIT LINE
YOSEMITE Ave	44				168	40		2 - "STOP", 2-TYPE III (L) ARROWS, 2-TYPE III (R) ARROWS, 40' LIMIT LINE
HUMBOLDT Rd	44		31			42		2 - "STOP", 1 - "AHEAD", 42' LIMIT LINE
SUBTOTAL	88	64	93	62	882	282	580	
TOTAL	2,051							

*ALL CROSSWALKS ARE BASIC TYPE.

TRAFFIC LINES, PAVEMENT MARKERS, AND DELINEATORS

LOCATION/ DESCRIPTION	4" THERMOPLASTIC TRAFFIC STRIPE			4" THERMOPLASTIC TRAFFIC STRIPE BROKEN (36-12)		4" THERMOPLASTIC TRAFFIC STRIPE (BROKEN 12-3)	8" THERMOPLASTIC TRAFFIC STRIPE	PAVEMENT MARKER (RETROREFLECTIVE)			DELINEATOR** (CLASS 1)	
DETAIL/TYPE	19	22	27B	6	19	27C	38	D	G	H	E	F
UNITS	LF							EA			EA	
PM 11.27 TO R15.49	3,411	18,707	43,835	11,933	3,411	475	1,692	1,138	78	148	43	15
TOTAL	65,953			15,344		475	1,692	1,364			58	

**EXACT DELINEATOR LOCATIONS TO BE DETERMINED BY THE ENGINEER.

SUMMARY OF QUANTITIES

Q-1

REVISED BY | DATE REVISED
NIK BEACH | DARLENE WULFF
CALCULATED-DESIGNED BY | CHECKED BY
FUNCTIONAL SUPERVISOR | DARLENE WULFF
STATE OF CALIFORNIA - DEPARTMENT OF TRANSPORTATION
Caltrans® MAINTENANCE DESIGN

LAST REVISION 02-27-13 | DATE PLOTTED => 28-FEB-2013 | TIME PLOTTED => 10:50

Dist	COUNTY	ROUTE	POST MILES TOTAL PROJECT	SHEET No.	TOTAL SHEETS
03	But	32	11.3/R15.5	7	23

Darlene Wulff 2-26-13
REGISTERED CIVIL ENGINEER DATE

3-4-13
PLANS APPROVAL DATE

REGISTERED PROFESSIONAL ENGINEER
DARLENE WULFF
No. C77879
Exp. 6-30-13
CIVIL
STATE OF CALIFORNIA

THE STATE OF CALIFORNIA OR ITS OFFICERS OR AGENTS SHALL NOT BE RESPONSIBLE FOR THE ACCURACY OR COMPLETENESS OF SCANNED COPIES OF THIS PLAN SHEET.

REPLACE ASPHALT CONCRETE SURFACING

LOCATION/ DESCRIPTION	L × W	(N) HOT MIX ASPHALT (TYPE A)	REPLACE ASPHALT CONCRETE SURFACING
		TON	CY
PM 11.35-11.38 EB THRU LANE	137′ × 12′	31	15.3
PM 11.64-11.71 EB THRU LANE	354′ × 12′	80	39.3
PM 11.66-11.77 EB L+ TURN LANE	74′ × 12′	17	8.2
PM 11.79-11.83 EB THRU LANE	211′ × 12′	48	23.5
PM 11.81-11.72 WB THRU LANE	465′ × 12′	105	51.6
PM 11.77-11.72 WB L+ TURN LANE	253′ × 12′	57	28.2
PM 11.46-11.35 WB THRU LANE	570′ × 12′	129	63.4
TOTAL		467	229.5

(N) - NOT A SEPARATE PAY ITEM, FOR INFORMATION ONLY.

SHOULDER BACKING

LOCATION/ DESCRIPTION	SHOULDER BACKING
	TON
PM 11.27 -11.63 R+	52
PM 11.77 -13.28 R+	395
PM 13.69 -14.73 R+	158
PM 15.00 - R15.49 R+	90
PM R15.49 -14.55 L+	236
PM 14.16 -13.71 L+	66
PM 13.31 -11.27 L+	437
TOTAL	1,434

COLD PLANE ASPHALT CONCRETE PAVEMENT

LOCATION/ DESCRIPTION	COLD PLANE ASPHALT CONCRETE PAVEMENT
	SQYD
PM 11.27 - Beg Const/EL MONTE Ave	1,570
PM 11.72 - BRUCE Rd	254
PM 12.39 - YOSEMITE Ave	79
PM 15.21 - HUMBOLDT Rd	63
PM R15.49 - END Const	143
TOTAL	2,109

METAL BEAM GUARD RAILING AND OBJECT MARKERS

LOCATION/ DESCRIPTION	RECONSTRUCT METAL BEAM GUARD RAILING	REMOVE METAL BEAM GUARD RAILING	TREATED WOOD WASTE	ALTERNATIVE IN-LINE TERMINAL SYSTEM	ALTERNATIVE FLARED TERMINAL SYSTEM	END ANCHOR ASSEMBLY (TYPE SFT)	RESET END SECTION	(N) REMOVE CABLE ANCHOR ASSEMBLY	(N) REMOVE CONCRETE POST FOOTING	(N) REMOVE CONCRETE ANCHOR	(N) REMOVE END SECTION	OBJECT MARKER (TYPE L-1)
	LF		LB	EA								
PM 11.741 - 11.758 L+	87.5		1,748			1	1	1	2			
PM 11.758 - 11.763 L+		25.0		1				1	2		1	
PM 11.763 - 11.767 L+												
PM R15.346 - R15.480 L+	712.5		11,129			1	1	1		1		
PM R15.480 - R15.488 L+		37.5			1			1		1		1
TOTAL	800.0	62.5	12,877	1	1	2	2	4	4	2	1	1

(N) - NOT A SEPARATE PAY ITEM, FOR INFORMATION ONLY.

SUMMARY OF QUANTITIES

Q-2

REVISED BY | DATE REVISED
NIK BEACH | DARLENE WULFF
CALCULATED-DESIGNED BY | CHECKED BY
FUNCTIONAL SUPERVISOR: DARLENE WULFF
STATE OF CALIFORNIA - DEPARTMENT OF TRANSPORTATION
Caltrans® MAINTENANCE DESIGN

LAST REVISION 02-27-13 | DATE PLOTTED => 28-FEB-2013 | TIME PLOTTED => 10:50

Dist	COUNTY	ROUTE	POST MILES TOTAL PROJECT	SHEET No.	TOTAL SHEETS
03	But	32	11.3/R15.5	8	23

Darlene Wulff 2-26-13
REGISTERED CIVIL ENGINEER DATE

3-4-13
PLANS APPROVAL DATE

REGISTERED PROFESSIONAL ENGINEER
DARLENE WULFF
No. C77879
Exp. 6-30-13
CIVIL
STATE OF CALIFORNIA

THE STATE OF CALIFORNIA OR ITS OFFICERS OR AGENTS SHALL NOT BE RESPONSIBLE FOR THE ACCURACY OR COMPLETENESS OF SCANNED COPIES OF THIS PLAN SHEET.

HOT MIX ASPHALT DIKE

LOCATION/ DESCRIPTION	REMOVE ASPHALT CONCRETE DIKE	PLACE HOT MIX ASPHALT DIKE (TYPE A)	PLACE HOT MIX ASPHALT DIKE (TYPE C)	PLACE HOT MIX ASPHALT DIKE (TYPE E)	PLACE HOT MIX ASPHALT DIKE (TYPE F)	HOT MIX ASPHALT (TYPE A)
	LF					TON
PM 11.60 - 11.72 R+	651	651				17.8
PM 11.73 - 11.75 R+	139	139				3.8
PM 11.75 - 11.85 R+	549			549		14.5
PM 11.85 - 11.93 R+	385			385		10.2
PM 12.13 - 12.39 R+	1,357			1,357		35.8
PM 12.65 - 13.16 R+	2,693			2,693		71.1
PM 13.25 - 13.65 R+	2,107	2,107				57.7
PM 13.70 - 14.06 R+	1,869			1,869		49.3
PM 14.12 - 14.53 R+	2,144	2,144				58.8
PM R15.36 - R15.47 R+	586			586		15.5
PM 15.25 - 14.98 L+	1,399			1,399		36.9
PM 14.77 - 14.50 L+	1,426			1,426		37.6
PM 14.14 - 14.13 L+	63	63				1.7
PM 13.68 - 13.28 L+	2,102	2,102				57.6
PM 13.28 - 13.14 L+	750			750		19.8
PM 12.80 - 12.70 L+	512			512		13.5
PM 12.66 - 12.39 L+	1,443			1,443		38.1
PM 12.38 - 12.37 L+	63			63		1.7
PM 12.10 - 12.01 L+	486			486		12.8
PM 11.93 - 11.77 L+	818			818		21.6
PM 11.77 - 11.76 L+	75		75			0.6
PM 11.76 - 11.75 L+	63				63	0.8
TOTAL	21,680	7,206	75	14,336	63	577.2*

*PROJECT SUBTOTAL. SEE COLD IN-PLACE RECYCLING AND HOT MIX ASPHALT PAVING TABLE FOR PROJECT TOTAL.

COLD IN-PLACE RECYCLING AND HOT MIX ASPHALT PAVING

LOCATION/ DESCRIPTION	COLD IN-PLACE RECYCLING	EMULSIFIED RECYCLING AGENT (COLD IN-PLACE RECYCLING)	CEMENT (COLD IN-PLACE RECYCLING)	ASPHALTIC EMULSION (COLD IN-PLACE RECYCLING)	SAND COVER (COLD IN-PLACE RECYCLING)	TACK COAT	HOT MIX ASPHALT (TYPE A)
	SQYD	TON					
PM 11.27 - 11.83						7.8	1,835
PM 11.83 - 12.49	15,151	70	17.4	5.0	30	7.1	1,658
PM 12.49 - 13.49	19,321	89	22.2	6.4	39	8.8	2,059
PM 13.49 - 14.49	19,360	89	22.3	6.4	39	8.9	2,080
PM 14.49 - R15.49	19,360	89	22.3	6.4	39	9.5	2,230
SUBTOTAL	73,192	337	84.2	24.2	147	42.1	9,862
TOTAL FROM Misc HMA TABLE							1.7
TOTAL FROM HMA DIKE TABLE							577.2
TOTAL FROM SAFETY EDGE TABLE							25.6
TOTAL	73,192	337	84.2	24.2	147	42.1	10,466.5

SAFETY EDGE

LOCATION/ DESCRIPTION	SAFETY EDGE (N)	HOT MIX ASPHALT (TYPE A)
	LF	TON
PM 11.29-11.60 R+	1,632	2.3
PM 11.93-12.13 R+	1,088	1.5
PM 12.39-12.65 R+	1,362	1.9
PM 13.16-13.25 R+	486	0.7
PM 13.65-13.70 R+	280	0.4
PM 14.06-14.12 R+	359	0.5
PM 14.53-14.65 R+	649	0.9
PM 14.68-14.75 R+	333	0.5
PM 15.01-15.21 R+	1,035	1.5
PM 15.24-R15.36 R+	628	0.9
PM R15.47-R15.49 R+	148	0.2
PM R15.49-R15.49 L+	42	0.1
PM R15.35-15.25 L+	523	0.7
PM 14.98-14.77 L+	1,119	1.6
PM 14.13-13.69 L+	2,339	3.3
PM 13.14-12.80 L+	1,800	2.6
PM 12.70-12.66 L+	227	0.3
PM 12.37-12.10 L+	1,420	2.0
PM 12.01-11.93 L+	444	0.6
PM 11.71-11.29 L+	2,212	3.1
TOTAL	18,126	25.6*

(N) - NOT A SEPARATE PAY ITEM, FOR INFORMATION ONLY.
*PROJECT SUBTOTAL. SEE COLD IN-PLACE RECYCLING AND HOT MIX ASPHALT PAVING TABLE FOR PROJECT TOTAL.

MISCELLANEOUS HOT MIX ASPHALT

LOCATION/ DESCRIPTION	PLACE HOT MIX ASPHALT (MISCELLANEOUS AREA)	HOT MIX ASPHALT (TYPE A)
	SQYD	TON
PM 11.772 L+	10	1.7
TOTAL	10	1.7*

*PROJECT SUBTOTAL. SEE COLD IN-PLACE RECYCLING AND HOT MIX ASPHALT PAVING TABLE FOR PROJECT TOTAL.

SUMMARY OF QUANTITIES

Q-3

REVISED BY | DATE REVISED
NIK BEACH | DARLENE WULFF
CALCULATED-DESIGNED BY | CHECKED BY
FUNCTIONAL SUPERVISOR: DARLENE WULFF
STATE OF CALIFORNIA - DEPARTMENT OF TRANSPORTATION
Caltrans® MAINTENANCE DESIGN

LAST REVISION 02-27-13 | DATE PLOTTED => 28-FEB-2013 | TIME PLOTTED => 10:50

Dist	COUNTY	ROUTE	POST MILES TOTAL PROJECT	SHEET No.	TOTAL SHEETS
	But	32	11.3/R15.5	9	23

H. Golban 2-19-13
REGISTERED ELECTRICAL ENGINEER DATE

3-4-13
PLANS APPROVAL DATE

REGISTERED PROFESSIONAL ENGINEER HABBIB GOLBAN No. E17928 Exp. 09-30-14 ELECTRICAL STATE OF CALIFORNIA

THE STATE OF CALIFORNIA OR ITS OFFICERS OR AGENTS SHALL NOT BE RESPONSIBLE FOR THE ACCURACY OR COMPLETENESS OF SCANNED COPIES OF THIS PLAN SHEET.

LEGEND (THIS SHEET ONLY)

1. Exist TYPE III-AF SERVICE EQUIPMENT ENCLOSURE CTID No. 03120320011704. FOR SERVICE WIRING DIAGRAM SEE SHEET E-3.
2. Exist TYPE 332 CONTROLLER CABINET.
3. sp, PG&E.
4. RC 1 dlc, ADD 1 DLC
5. RC 8 dlc, ADD 9 DLC
6. RC 12 dlc, ADD 15 DLC
7. RC 14 dlc, ADD 18 DLC
8. RC 22 dlc, ADD 27 DLC
9. RC 2 dlc, ADD 1 DLC
10. RC 2 dlc, ADD 3 DLC

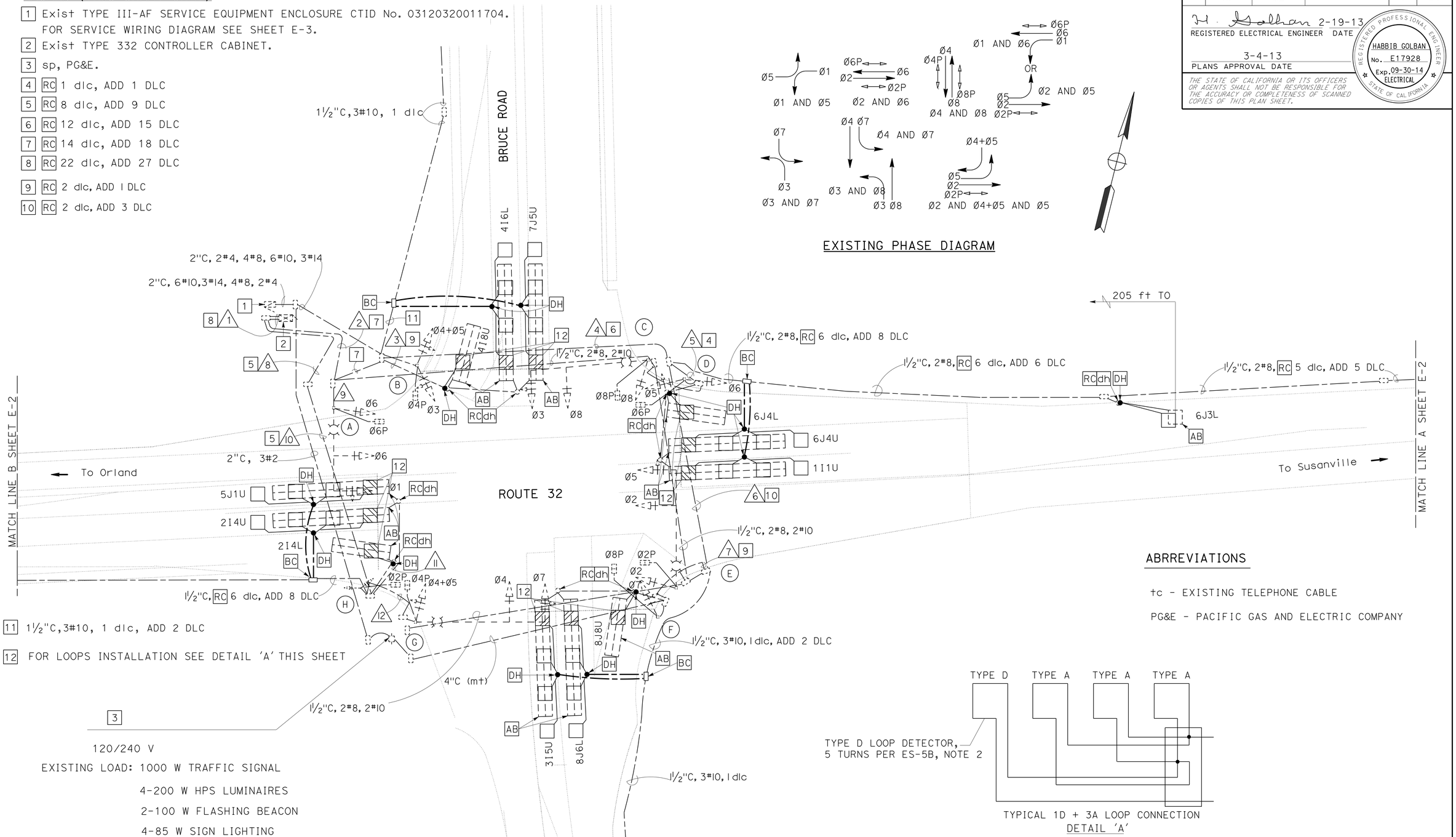

EXISTING PHASE DIAGRAM

11 1½"C,3#10, 1 dlc, ADD 2 DLC

12 FOR LOOPS INSTALLATION SEE DETAIL 'A' THIS SHEET

3

120/240 V

EXISTING LOAD: 1000 W TRAFFIC SIGNAL

4-200 W HPS LUMINAIRES

2-100 W FLASHING BEACON

4-85 W SIGN LIGHTING

ABRREVIATIONS

tc - EXISTING TELEPHONE CABLE

PG&E - PACIFIC GAS AND ELECTRIC COMPANY

TYPICAL 1D + 3A LOOP CONNECTION
DETAIL 'A'

MODIFY SIGNAL AND LIGHTING

SCALE: 1"=20'

APPROVED FOR ELECTRICAL WORK ONLY

E-1

REVISED BY	DATE REVISED

CALCULATED-DESIGNED BY: OANH DUC NGUYEN
CHECKED BY: HABBIB GOLBAN
FUNCTIONAL SUPERVISOR: NELSON LEE

STATE OF CALIFORNIA - DEPARTMENT OF TRANSPORTATION
Caltrans
ELECTRICAL DESIGN

LAST REVISION 02-21-13 | DATE PLOTTED => 28-FEB-2013 | TIME PLOTTED => 10:50

Dist	COUNTY	ROUTE	POST MILES TOTAL PROJECT	SHEET No.	TOTAL SHEETS
03	But	32	11.3/R15.5	10	23

H. Golban 2-19-13
REGISTERED ELECTRICAL ENGINEER DATE

3-4-13
PLANS APPROVAL DATE

REGISTERED PROFESSIONAL ENGINEER
HABBIB GOLBAN
No. E17928
Exp. 09-30-14
ELECTRICAL
STATE OF CALIFORNIA

THE STATE OF CALIFORNIA OR ITS OFFICERS OR AGENTS SHALL NOT BE RESPONSIBLE FOR THE ACCURACY OR COMPLETENESS OF SCANNED COPIES OF THIS PLAN SHEET.

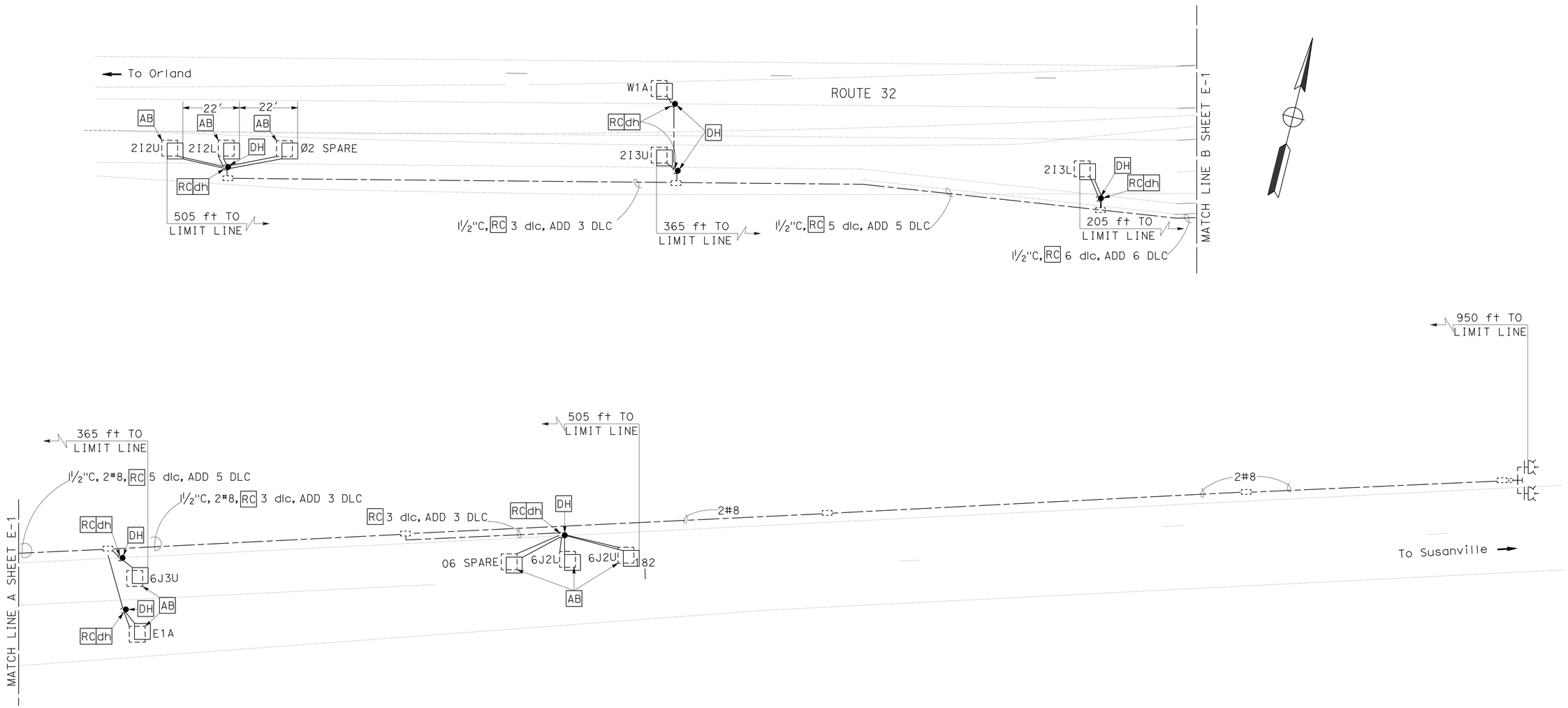

APPROVED FOR ELECTRICAL WORK ONLY

MODIFY SIGNAL AND LIGHTING

SCALE: 1"=20'

E-2

STATE OF CALIFORNIA - DEPARTMENT OF TRANSPORTATION
Caltrans® **ELECTRICAL DESIGN**

FUNCTIONAL SUPERVISOR: NELSON LEE
CALCULATED-DESIGNED BY: OANH DUC NGUYEN
CHECKED BY: HABBIB GOLBAN
REVISED BY
DATE REVISED

LAST REVISION 02-21-13
DATE PLOTTED => 20-FEB-2013
TIME PLOTTED => 10:50

Dist	COUNTY	ROUTE	POST MILES TOTAL PROJECT	SHEET No.	TOTAL SHEETS
03	But	32	11.3/R15.5	11	23

H. Golban 2-19-13
REGISTERED ELECTRICAL ENGINEER DATE

3-4-13
PLANS APPROVAL DATE

REGISTERED PROFESSIONAL ENGINEER
HABBIB GOLBAN
No. E17928
Exp. 09-30-14
ELECTRICAL
STATE OF CALIFORNIA

THE STATE OF CALIFORNIA OR ITS OFFICERS OR AGENTS SHALL NOT BE RESPONSIBLE FOR THE ACCURACY OR COMPLETENESS OF SCANNED COPIES OF THIS PLAN SHEET.

EXISTING CONDUIT AND CONDUCTOR SCHEDULE

AWG OR CABLE	CONDUCTOR RUN	1 [e]	2 [d]	3 [g]	4 [c]	5 [a]	6 [g]	7 [f]	8 [b]	9	10 [b]	11	12
#14	Ø1	6							6	3	3	3	
	Ø2	6	3		3		3		3		3		
	Ø3	6	6	3	3								
	Ø4	3							3		3		3
	Ø4+05	6	3	3					3		3		3
	Ø5	6	6		6	3	3						
	Ø6	6	3		3	3			3	3			
	Ø7	6	3		3		3	3	3		3		3
	Ø8	3	3		3								
	Ø2P	4	2		2		2		2		2	2	
	Ø4P	4	2	2					2		2		2
	Ø6P	4	2		2	2			2	2			
	Ø8P	4	4		4		2	2					
	Ø2PPB	1	1		1		1	1	1		1		1
	Ø4PPB	1							1	1	1	1	
	Ø6PPB	1	1	1	1								
	Ø8PPB	1	1		1	1	1						
	PPB COMMON	1	1	1	1	1	1	1	1	1	1	1	1
	SPARES	3	3	3	3	3	3	3	3	3	3	3	3
	PEU		3						3	3			
	TOTAL #14	72	47	13	36	13	19	10	36	16	25	10	16
#10	SIGNAL COMMON	1	1	1	1	1	1	1	1	1	1	1	1
#4	CONTROLLER	2	2										
#8	LUMINAIRES		2		2		2		2	2	2		2
DLC	Ø1 DET	1	1		1	1							
	Ø2 DET	7							7		7	2	
	Ø3 DET	1	1		1		1						
	Ø4 DET	3	3	2									
	Ø5 DET	1							1		1	1	
	Ø6 DET	7	7		7	2							
	Ø7 DET	1	1	1									
	Ø8 DET	3	3		3		3	2					
	E1A	1	1		1								
	W1A	1							1		1		
	TOTAL DLC	26	17	3	13	3	4	2	9		9	3	
CONDUIT SIZE		2-3"	4"	2"	4"	2"	4"	2"	3"	2"	3"	2"	2"

a RC 1 dlc, ADD 1 DLC

b RC 8 dlc, ADD 9 DLC

c RC 12 dlc, ADD 15 DLC

d RC 14 dlc, ADD 18 DLC

e RC 22 dlc, ADD 27 DLC

f RC 2 dlc, ADD 1 DLC

g RC 2 dlc, ADD 3 DLC

EXISTING POLE AND EQUIPMENT SCHEDULE

No.	STANDARD TYPE	STANDARD SMA	STANDARD LMA	VEH SIGNAL Ø	VEH SIGNAL TYPE	VEH SIGNAL MTG	PED SIGNAL Ø	PED SIGNAL TYPE	PED SIGNAL MTG	PPB Ø	PPB ARROW	HPS LUMINAIRE
A	24-3-80	35	15	1 6 6	A 12 12	MAT MAS-4A SV-1-T	6	A	SP-1-T	4	←	200 W
B	1-B (12'-6")			3 4+5	A A	TV-2-T	4	A	SP-1-T	6	→	
C	29-5-80	50	15	3 8 8	A 12 8	MAT MAS SV-1-T	8	A	SP-1-T	6	←	200 W
D	1-B			5 6	A 8	TV-2-T	6	A	SP-1-T	8	→	
E	29-5-80	50	15	5 2 2	A 12 12	MAT MAS-4A SV-1-T	2	A	SP-1-T	8	←	200 W
F	1-B			7	12	TV-1-T	8	A	SP-1-T	2	→	
G	29-5-80	50	15	7 4 4+5	A 12 A	MAT MAS SV-1-T	4	A	SP-1-T	2	←	200 W
H	1-B			1 2	A 8	TV-2-T	2	A	SP-1-T	4	→	

A = All 12" Arrows
8 = All 8" Heads
12 = All 12" Heads

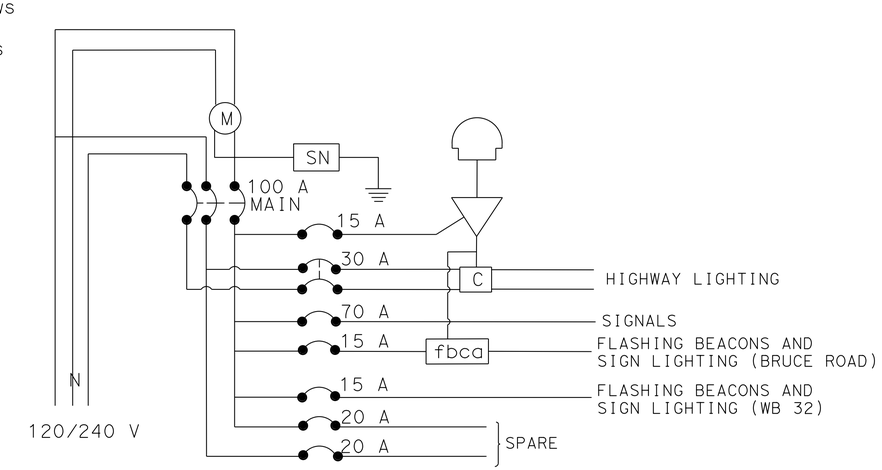

EXISTING SERVICE WIRING DIAGRAM

CTID No. 03120320011704.

WIRING DIAGRAM LEGEND:

- fbca — FLASHING BEACON CONTROL ASSEMBLY
- M — METER SOCKET AND SUPPORT
- C — CONTACTOR
- SN — SOLID NEUTRAL BUS
- AUTO TEST SWITCH
- PHOTOELECTRIC UNIT

MODIFY SIGNAL AND LIGHTING (CONDUCTOR, POLE AND EQUIPMENT SCHEDULES)

NO SCALE

APPROVED FOR ELECTRICAL WORK ONLY

E-3

STATE OF CALIFORNIA - DEPARTMENT OF TRANSPORTATION
Caltrans® ELECTRICAL DESIGN
FUNCTIONAL SUPERVISOR: NELSON LEE
CALCULATED-DESIGNED BY: OANH DUC NGUYEN
CHECKED BY: HABBIB GOLBAN
REVISED BY / DATE REVISED

LAST REVISION 02-21-13
DATE PLOTTED => 28-FEB-2013
TIME PLOTTED => 10:50

Dist	COUNTY	ROUTE	POST MILES TOTAL PROJECT	SHEET No.	TOTAL SHEETS
03	But	32	11.3/R15.5	12	23

H. Golban 2-19-13
REGISTERED ELECTRICAL ENGINEER DATE

3-4-13
PLANS APPROVAL DATE

REGISTERED PROFESSIONAL ENGINEER HABBIB GOLBAN No. E17928 Exp. 09-30-14 ELECTRICAL STATE OF CALIFORNIA

THE STATE OF CALIFORNIA OR ITS OFFICERS OR AGENTS SHALL NOT BE RESPONSIBLE FOR THE ACCURACY OR COMPLETENESS OF SCANNED COPIES OF THIS PLAN SHEET.

LEGEND (THIS SHEET ONLY)

1. Exist TYPE III-AF SERVICE EQUIPMENT ENCLOSURE CTID No. 03120320011270. FOR SERVICE WIRING DIAGRAM SEE SHEET E-5.
2. Exist TYPE 332 CONTROLLER CABINET.
3. Exist TELEPHONE DEMARCATION CABINET.
4. 2"C, 1 dlc 1 sic
5. 2"C, 2 dlc 1 sic
6. 2"C, 3 dlc 1 sic
7. 2"C, 8#8, 2#14, 3#10
8. 1-tc
9. sp, PG&E
10. ADD 1 DLC
11. ADD 2 DLC
12. ADD 3 DLC
13. FOR LOOPS INSTALLATION SEE DETAIL 'A' THIS SHEET

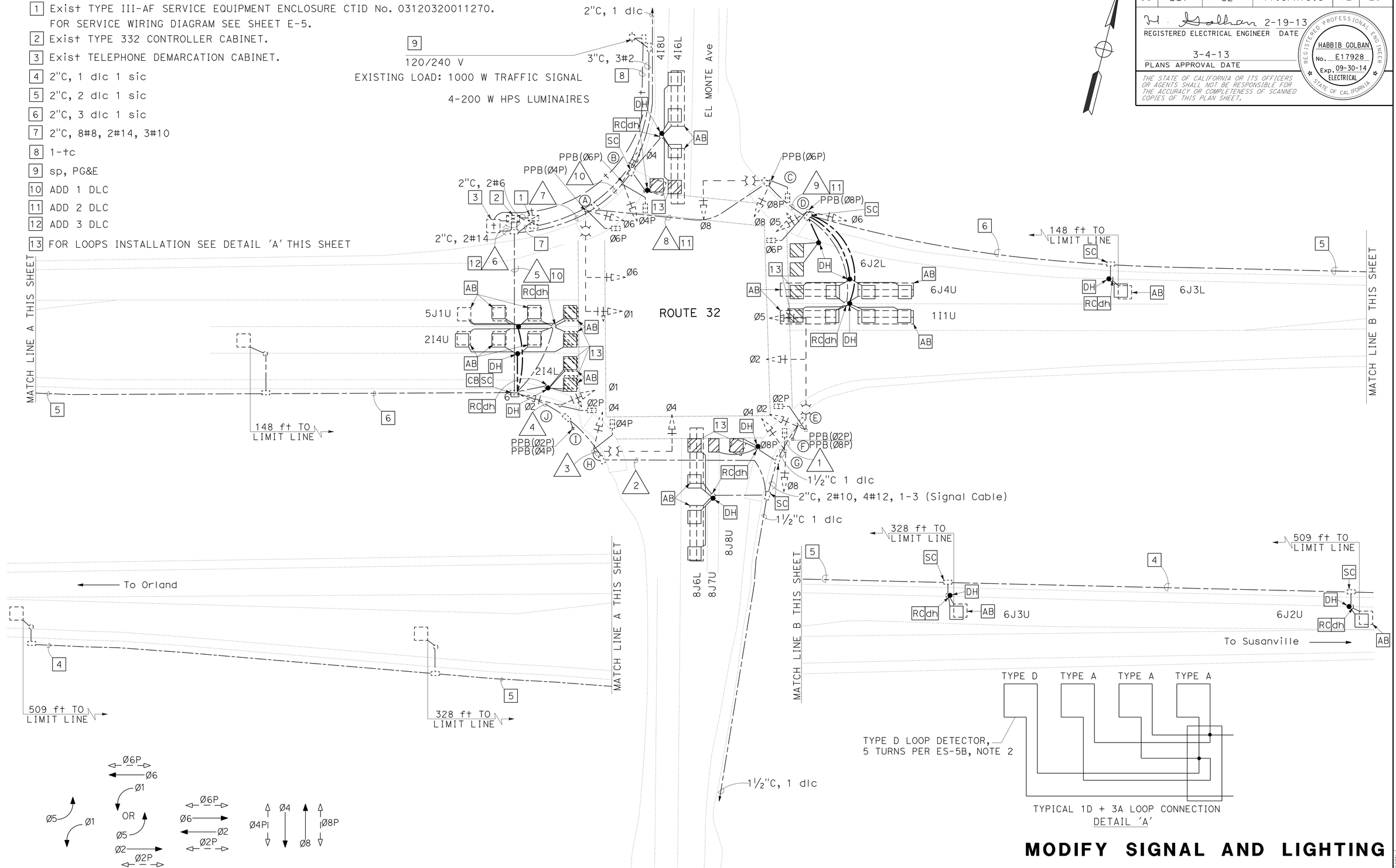

EXISTING PHASE DIAGRAM

APPROVED FOR ELECTRICAL WORK ONLY

MODIFY SIGNAL AND LIGHTING

SCALE : 1"=20'

E-4

STATE OF CALIFORNIA - DEPARTMENT OF TRANSPORTATION
Caltrans
ELECTRICAL DESIGN

FUNCTIONAL SUPERVISOR: NELSON LEE
CALCULATED-DESIGNED BY: HABBIB GOLBAN
CHECKED BY: OANH DUC NGUYEN
REVISED BY
DATE REVISED

LAST REVISION 02-21-13
DATE PLOTTED => 28-FEB-2013
TIME PLOTTED => 10:51

Dist	COUNTY	ROUTE	POST MILES TOTAL PROJECT	SHEET No.	TOTAL SHEETS
03	But	32	11.3/R15.5	13	23

H. Golban 2-19-13
REGISTERED ELECTRICAL ENGINEER DATE

3-4-13
PLANS APPROVAL DATE

REGISTERED PROFESSIONAL ENGINEER HABBIB GOLBAN No. E17928 Exp. 09-30-14 ELECTRICAL STATE OF CALIFORNIA

THE STATE OF CALIFORNIA OR ITS OFFICERS OR AGENTS SHALL NOT BE RESPONSIBLE FOR THE ACCURACY OR COMPLETENESS OF SCANNED COPIES OF THIS PLAN SHEET.

EXISTING CONDUIT AND CONDUCTOR SCHEDULE

CONDUCTOR DESIGNATION			CONDUIT RUN NUMBER AND SIZE									
CABLE TYPE	STD	PHASE	1	2	3	4	5*	6***	7	8**	9**	10
			2"	3"	3"	3"	2-3"	2-4"	4"	3"	3"	2"
VEH-PED 12 CSC	A	1,6,6P / 4						1 / 1	1 / 1			
	B	4,8,4P / 6						1 / 1	1 / 1			1 / 1
	C	8,8P / 6						1 / 1	1 / 1	1	1	
	D	5,6,6P / 8						1 / 1	1 / 1	1 / 1	1 / 1	
	E	2,5,2P	1	1	1	1	1	1				
	F	2,8	1	1	1	1	1	1				
	G	4,8,4P		1	1	1	1	1				
	H	4,4P			1	1	1	1				
PPB 3 CSC	I	2,4				1 / 1	1					
	J	1,2,2P				1	1	1				
TOTAL CABLES			1 / 1	2 / 1	3 / 1	4 / 2	4 / 2	8 / 6	4 / 4	2 / 2	1 / 1	1 / 1
AWG		CIRCUIT										
#8		SIGNAL	2	2	2	2	2		2	2		
#8		LIGHTING						2				
PHASE												
Ø1								1	1	1	1	
Ø2							5	5				
Ø4								3	3			3
Ø5							1	1				
Ø6								4	4	4	4	
Ø8				4	4	4	4	4				
TOTAL DLC				4	4	4	10	18	8	5	5	3

EXISTING POLE AND EQUIPMENT SCHEDULE

No.	STANDARDS			VEH SIG MTG				PEDESTRIAN SIGNAL		PPB		HPS LUMINAIRE	SPECIAL REQUIREMENT
	TYPE	SMA (ft)	LMA (ft)	Ø	MAST ARM	Ø	POLE	Ø	MTG	Ø	ARROW		
A	26-4-80	45	15	1 6	MAT MAS	6	SV-2-T	6	SP-1-T	4	←	200 W	Exist TO REMAIN
B	1-B					4 8	TV-2-T	4	SP-1-T	6	→		
C	19-3-80	30	15	8	MAS	8	SV-1-T	8	SP-1-T	6	←		Exist TO REMAIN
D	1-B					6 5	TV-2-T	6	SP-1-T	8	→		
E	29-5-80	50	15	5 2	MAT MAS	2	SV-1-T	2	SP-1-T			200 W	Exist TO REMAIN
F	PPB POST									2 8	→ ←		
G	1-B					8	TV-2-T	4 8	SP-1-T				
H	24-4-80	35	15	4	MAT	4	SV-1-T		SP-1-T			200 W	Exist TO REMAIN
I	PPB POST									2 4	→ →		
J	1-B					2	TV-2-T	2	SP-1-T				

* ADD 1 DLC
** ADD 2 DLC
*** ADD 3 DLC

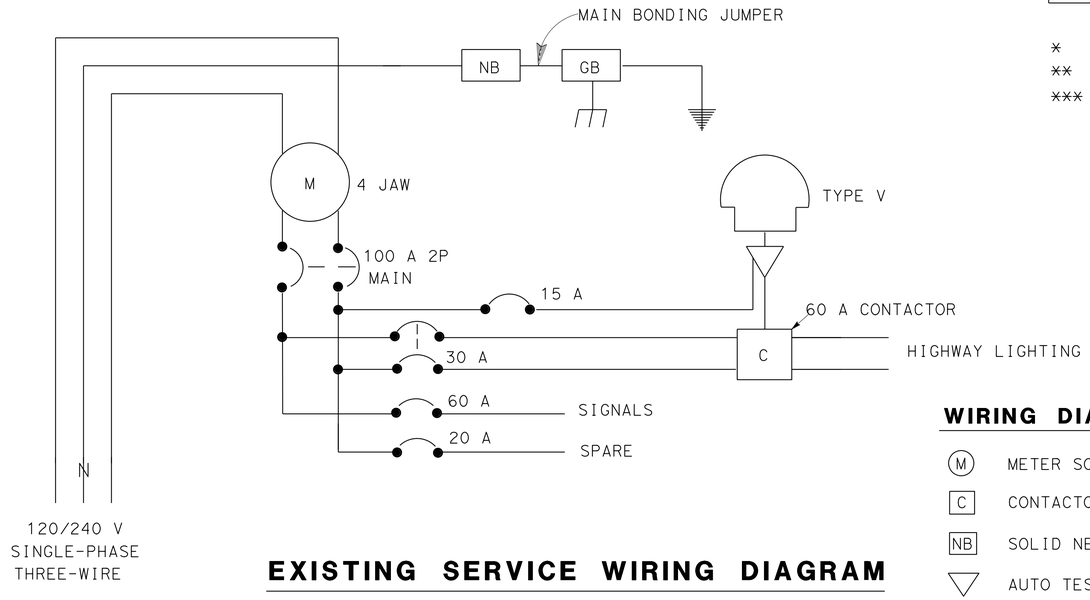

EXISTING SERVICE WIRING DIAGRAM

CTID No. 03120320011270.

WIRING DIAGRAM LEGEND:

- (M) METER SOCKET AND SUPPORT
- [C] CONTACTOR
- [NB] SOLID NEUTRAL BUS
- ▽ AUTO TEST SWITCH
- ⌒ PHOTOELECTRIC UNIT

MODIFY SIGNAL AND LIGHTING (CONDUCTOR, POLE AND EQUIPMENT SCHEDULES)

NO SCALE

APPROVED FOR ELECTRICAL WORK ONLY

E-5

LAST REVISION 02-21-13 | DATE PLOTTED => 28-FEB-2013 | TIME PLOTTED => 10:51

STATE OF CALIFORNIA - DEPARTMENT OF TRANSPORTATION
Caltrans® ELECTRICAL DESIGN
FUNCTIONAL SUPERVISOR: NELSON LEE
CALCULATED-DESIGNED BY: OANH DUC NGUYEN | CHECKED BY: HABBIB GOLBAN
REVISED BY | DATE REVISED

Dist	COUNTY	ROUTE	POST MILES TOTAL PROJECT	SHEET No.	TOTAL SHEETS
03	But	32	11.3/R15.5	14	23

H. Golban 2-19-13
REGISTERED ELECTRICAL ENGINEER DATE

3-4-13
PLANS APPROVAL DATE

REGISTERED PROFESSIONAL ENGINEER
HABBIB GOLBAN
No. E17928
Exp. 09-30-14
ELECTRICAL
STATE OF CALIFORNIA

THE STATE OF CALIFORNIA OR ITS OFFICERS OR AGENTS SHALL NOT BE RESPONSIBLE FOR THE ACCURACY OR COMPLETENESS OF SCANNED COPIES OF THIS PLAN SHEET.

MODIFY SIGNAL AND LIGHTING

Sheet No.	(N) Type D Loop	(N) Type A Loop	(N) Length of DLC	(N) RC Detector Handhole	(N) Detector Handhole Type A	(N) RC dlc	(N) No. 6 Pull Box	(N) No. 5 Pull Box	(N) SC
	EA	EA	LF	EA	EA	LF	EA	EA	EA
E-1	12	25	4400	9	13	4000		4	
E-2		11	1600	5	7				
E-4	12	21	1000	9	13		1		7

(N) - NOT A SEPARATE PAY ITEM, FOR INFORMATION ONLY

ELECTRICAL QUANTITIES

NO SCALE

E-6

APPROVED FOR ELECTRICAL WORK ONLY

STATE OF CALIFORNIA - DEPARTMENT OF TRANSPORTATION
Caltrans ELECTRICAL DESIGN

FUNCTIONAL SUPERVISOR: NELSON LEE
CALCULATED-DESIGNED BY: OANH DUC NGUYEN
CHECKED BY: HABBIB GOLBAN
REVISED BY
DATE REVISED

LAST REVISION 02-21-13
DATE PLOTTED => 28-FEB-2013
TIME PLOTTED => 10:51

Dist	COUNTY	ROUTE	POST MILES TOTAL PROJECT	SHEET No.	TOTAL SHEETS
03	But	32	11.3/R15.5	15	23

REGISTERED CIVIL ENGINEER 12-7-12 DATE

3-4-13
PLANS APPROVAL DATE

REGISTERED PROFESSIONAL ENGINEER Gurinderpal Bhullar No. C48815 Exp. 9-30-14 CIVIL STATE OF CALIFORNIA

THE STATE OF CALIFORNIA OR ITS OFFICERS OR AGENTS SHALL NOT BE RESPONSIBLE FOR THE ACCURACY OR COMPLETENESS OF SCANNED COPIES OF THIS PLAN SHEET.

NOTES:

Unless otherwise specified in the special provisions, all temporary warning signs shall have black legend on orange background.

California code are designated by (CA). Otherwise, Federal (MUTCD) codes are shown.

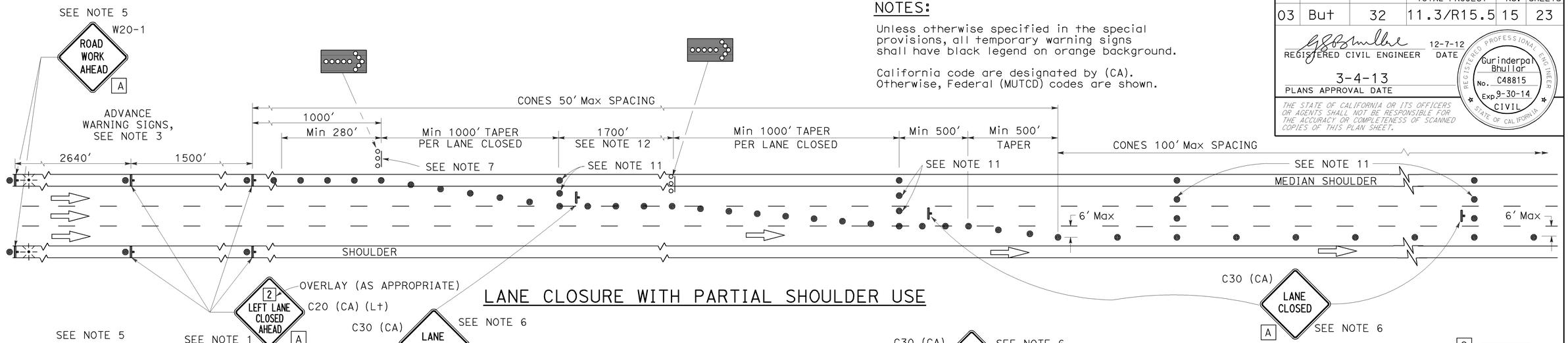

LANE CLOSURE WITH PARTIAL SHOULDER USE

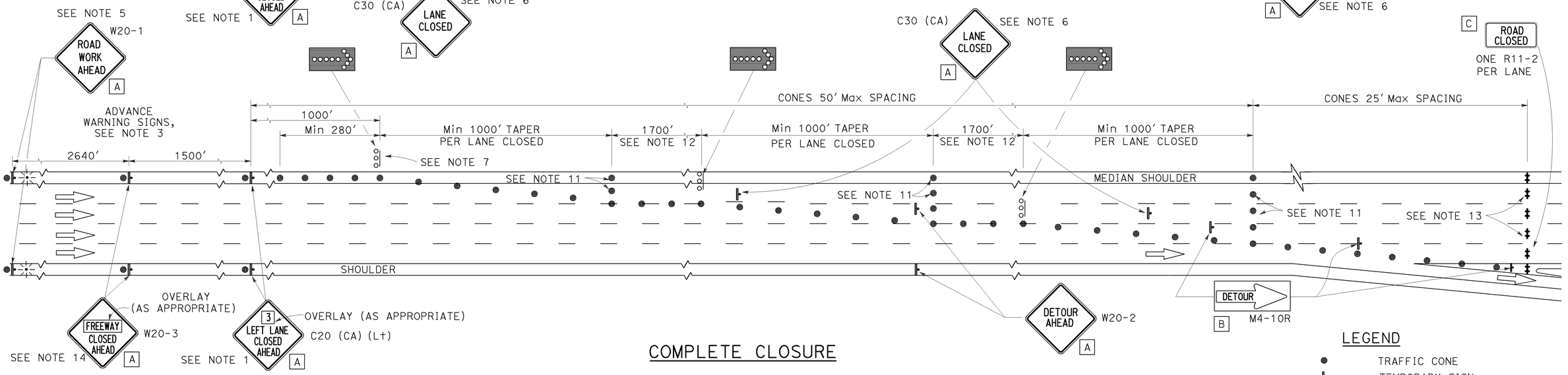

COMPLETE CLOSURE

LEGEND

- TRAFFIC CONE
- TEMPORARY SIGN
- BARRICADE
- FLASHING ARROW SIGN (FAS)
- FAS SUPPORT OR TRAILER
- PORTABLE FLASHING BEACON

NOTES:

1. Lane closures on the right side using partial median shoulder as a traffic lane shall conform to the details for inside lane closure except that C20 (CA) (Rt) signs shall be used.
2. At least one person shall be assigned to provide full time maintenance of traffic control devices for lane closures.
3. Each advance warning sign on each side of the roadway shall be equipped with at least two flags for daytime closure. Each flag shall be at least 16" X 16" in size and shall be orange or fluorescent red-orange in color. Flashing beacons shall be placed at the locations indicated for lane closure during hours of darkness.
4. A C14 (CA) "END ROAD WORK" sign, as appropriate, shall be placed at the end of the lane closure unless the end of work area is obvious or ends within a larger project's limits.
5. If the W20-1 sign would follow within 2000′ of a stationary W20-1 or C11 (CA) "ROAD WORK NEXT ___ MILES", use a C20 (CA) sign for the first advance warning sign.
6. Place a C30 (CA) sign every 2000′ throughout length of lane closure.
7. One flashing arrow sign for each lane closed. The first flashing arrow sign shall be Type I. All others may be either Type I or Type II.
8. A minimum 1500′ of sight distance shall be provided where possible for vehicles approaching the first flashing arrow sign. Lane closures shall not begin at the top of crest vertical curve or on a horizontal curve.
9. All cones used for lane closures during the hours of darkness shall be fitted with retroreflective bands (or sleeves) as specified in the specifications.
10. Portable delineators, placed at one-half the spacing indicated for traffic cones, may be used instead of cones for daytime closures only.
11. Unless otherwise specified in the special provisions, a minimum of 3 cones shall be placed transversely across each closed lane and shoulder at each location where a taper across a traffic lane ends and every 2000′ as shown on the "Lane Closure With Partial Shoulder Use" detail. Two Type II barricades may be used instead of the 3 cones. The transverse alignment of the cones or barricades on the closed shoulder may be shifted from the transverse alignment to provide access to the work.
12. Unless otherwise specified in the special provisions, the 1700′ tangent shown along lane lines shall be used between the 1000′ tapers required for each closed traffic lane.
13. A minimum of Two Type II barricades shall be placed across each closed lane and shoulder at the location shown and every 2000′ within the complete closure area. Within the complete closure area, the transverse alignment of the barricades on the closed shoulder may be shifted from the transverse alignment to provide access to the work.
14. When specified in the special provisions, a W20-2 "DETOUR AHEAD" sign is to be used in place of the W20-3 "FREEWAY CLOSED AHEAD" sign.

SIGN PANEL SIZE (Min)

A	48" × 48"
B	48" × 18"
C	48" × 30"

STATE OF CALIFORNIA
DEPARTMENT OF TRANSPORTATION

TRAFFIC CONTROL SYSTEM FOR LANE AND COMPLETE CLOSURES ON FREEWAYS AND EXPRESSWAYS

NO SCALE

TCS-1

STATE OF CALIFORNIA - DEPARTMENT OF TRANSPORTATION

Caltrans

REVISED BY | DATE REVISED | CALCULATED-DESIGNED BY | CHECKED BY | FUNCTIONAL SUPERVISOR

LAST REVISION 00-00-00 | DATE PLOTTED => 10-DEC-2012 | TIME PLOTTED => 09:45

Dist	COUNTY	ROUTE	POST MILES TOTAL PROJECT	SHEET No.	TOTAL SHEETS
03	But	32	11.3/R15.5	16	23

REGISTERED CIVIL ENGINEER 12-7-12 DATE

3-4-13
PLANS APPROVAL DATE

REGISTERED PROFESSIONAL ENGINEER Gurinderpal Bhullar No. C48815 Exp. 9-30-14 CIVIL STATE OF CALIFORNIA

THE STATE OF CALIFORNIA OR ITS OFFICERS OR AGENTS SHALL NOT BE RESPONSIBLE FOR THE ACCURACY OR COMPLETENESS OF SCANNED COPIES OF THIS PLAN SHEET.

NOTES:

Unless otherwise specified in the special provisions, all temporary warning signs shall have black legend on orange background.

California code are designated by (CA). Otherwise, Federal (MUTCD) codes are shown.

TYPICAL LANE CLOSURE WITH REVERSIBLE CONTROL

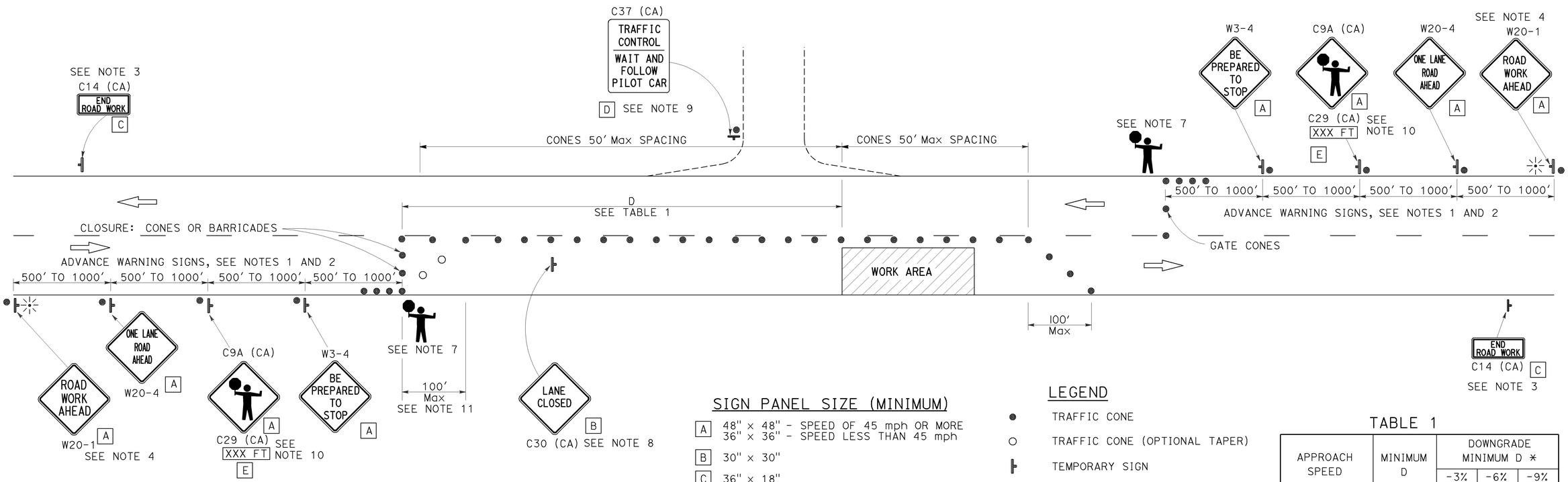

SIGN PANEL SIZE (MINIMUM)

- A — 48" x 48" - SPEED OF 45 mph OR MORE; 36" x 36" - SPEED LESS THAN 45 mph
- B — 30" x 30"
- C — 36" x 18"
- D — 36" x 42"
- E — 36" x 9"

LEGEND

- TRAFFIC CONE
- TRAFFIC CONE (OPTIONAL TAPER)
- TEMPORARY SIGN
- PORTABLE FLASHING BEACON
- FLAGGER

TABLE 1

APPROACH SPEED	MINIMUM D	DOWNGRADE MINIMUM D *		
		-3%	-6%	-9%
mph	ft	ft	ft	ft
25 AND BELOW	155	158	165	173
30	200	205	215	227
35	250	257	271	287
40	305	315	333	354
45	360	378	400	427
50	425	446	474	507
55	495	520	553	593
60	570	598	638	686
65	645	682	728	785

* USE ON SUSTAINED DOWNGRADE STEEPER THAN -3 PERCENT AND LONGER THAN 1 MILE.

NOTES:

1. Where approach speeds are low, advance warning signs may be placed at 300' spacing, and closer in urban areas.
2. Each advance warning sign in each direction of travel shall be equipped with at least two flags for daytime closure. Each flag shall be at least 16" x 16" in size and shall be orange or fluorescent red-orange in color. Flashing beacons shall be placed at the locations indicated for lane closure during hours of darkness.
3. A C14 (CA) "END ROAD WORK" sign, as appropriate, shall be placed at the end of the lane control unless the end of work area is obvious, or ends within a larger project's limits.
4. If the W20-1 sign would follow within 2000' of a stationary W20-1 or C11 (CA) "ROAD WORK NEXT _____MILES", use a W20-4 sign for the first advance warning sign.
5. All cones used for lane closures during the hours of darkness shall be fitted with retroreflective bands (or sleeves) as specified in the specifications.
6. Portable delineators, placed at one-half the spacing indicated for traffic cones, may be used instead of cones for daytime closures only.
7. Additional advance flaggers may be required. Flagger should stand in a conspicuous place, be visible to approaching traffic as well as approaching vehicles after the first vehicle has stopped. During the hours of darkness, the flagging-station and flagger shall be illuminated and clearly visible to approaching traffic. The illumination footprint of the lighting on the ground shall be at least 20' in diameter. Place a minimum of four cones at 50' intervals in advance of flagger station as shown.
8. Place C30 (CA) "LANE CLOSED" sign at 500' to 1000' intervals throughout extended work areas. They are optional if the work area is visible from the flagger station.
9. When a pilot car is used, place a C37 (CA) "TRAFFIC CONTROL-WAIT AND FOLLOW PILOT CAR" sign at all intersections within traffic control area. Signs shall be clean and visible at all times.
10. An optional C29 (CA) sign may be placed below the C9A (CA) sign.
11. Traffic cones or barricades may be placed on the optional taper as shown, barricades shall be Type I, II, or III.

STATE OF CALIFORNIA
DEPARTMENT OF TRANSPORTATION

TRAFFIC CONTROL SYSTEM FOR LANE CLOSURE ON TWO LANE CONVENTIONAL HIGHWAYS

NO SCALE

TCS-2

STATE OF CALIFORNIA - DEPARTMENT OF TRANSPORTATION

FUNCTIONAL SUPERVISOR | CALCULATED-DESIGNED BY | CHECKED BY | REVISED BY | DATE REVISED

LAST REVISION 00-00-00 | DATE PLOTTED => 10-DEC-2012 | TIME PLOTTED => 09:45

Dist	COUNTY	ROUTE	POST MILES TOTAL PROJECT	SHEET No.	TOTAL SHEETS
03	But	32	11.3/R15.5	17	23

REGISTERED CIVIL ENGINEER 12-7-12 DATE

3-4-13
PLANS APPROVAL DATE

REGISTERED PROFESSIONAL ENGINEER Gurinderpal Bhullar No. C48815 Exp. 9-30-14 CIVIL STATE OF CALIFORNIA

THE STATE OF CALIFORNIA OR ITS OFFICERS OR AGENTS SHALL NOT BE RESPONSIBLE FOR THE ACCURACY OR COMPLETENESS OF SCANNED COPIES OF THIS PLAN SHEET.

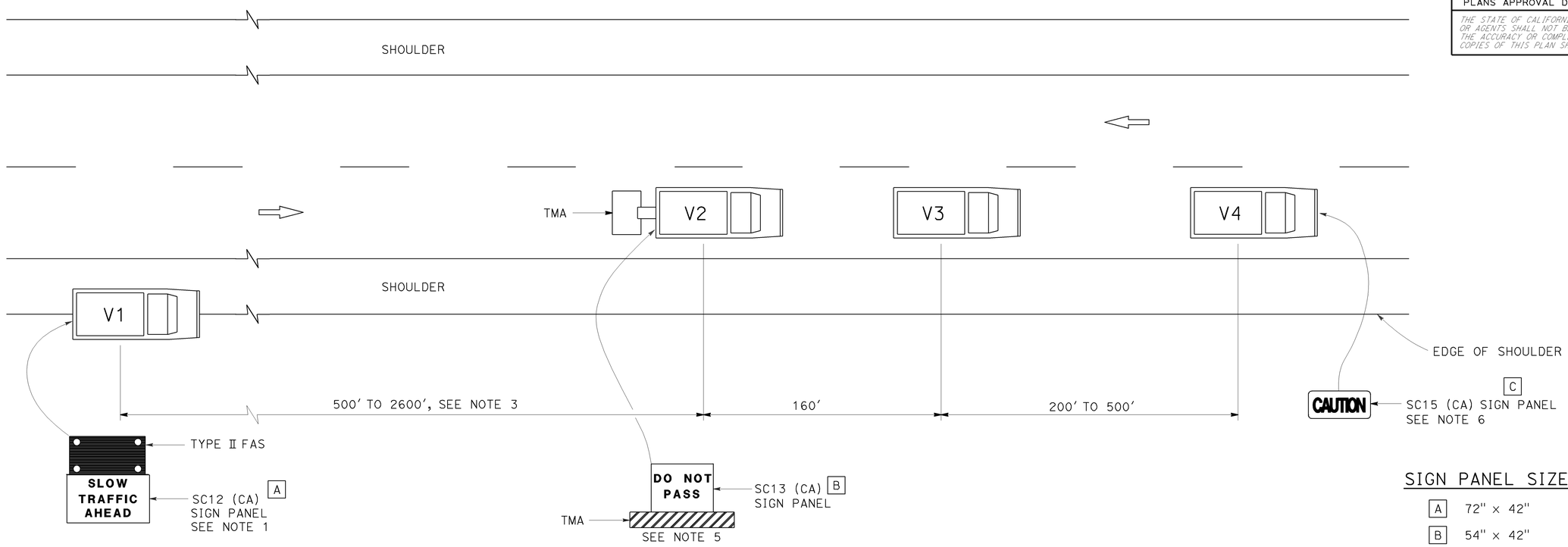

SIGN PANEL SIZE (Min)

A	72" x 42"
B	54" x 42"
C	54" x 24"

LEGEND

V1	SIGN VEHICLE
V2	SHADOW VEHICLE
V3	WORK/APPLICATION VEHICLE
V4	SIGN VEHICLE
TMA	TRUCK-MOUNTED ATTENUATOR
	FLASHING ARROW SIGN (FAS) IN FLASHING CAUTION MODE

NOTES:

1. Either a changeable message sign or a SC12 (CA) "SLOW TRAFFIC AHEAD" sign shall be mounted on the rear of sign vehicle V1. A Type II flashing arrow sign may be used with the SC12 (CA) sign panel.
2. Sign vehicle V1 should be positioned where highly visible when shoulders are not available.
3. If traffic queues develop, sign vehicle V1 should be positioned upstream from the end of queue.
4. Vehicle-mounted sign panels shall be Type III, IV VII, VIII or IX retroreflective sheeting, black on white, black on orange, or black on fluorescent orange, with 6" minimum series D letters per Caltrans sign specifications.
5. Gross Vehicle Weight of shadow vehicle shall be a minimum of 20,000 pounds and shall be equipped with a truck-mounted attenuator. The sign panel shown shall be mounted on the rear of shadow vehicle V2. The message "LANE CLOSED" may be used in place of the "DO NOT PASS" message.
6. The sign panel shown shall be mounted on the front of sign vehicle V4, facing opposing traffic.
7. All vehicles shall be equipped with flashing or rotating amber lights.
8. Sign vehicle V4 will not be required when the work and vehicles V2 and V3 are 2' or more from the centerline of the highway during the work or application operations.
9. All vehicles used for lane closures shall be equipped with two-way radios and the vehicle operators shall maintain communication during the work or application operation.
10. When multiple work vehicles are used in close proximity to each other, only one shadow vehicle is required and spacing between work vehicles shall be minimized in order to deter traffic from entering the closed lane.

STATE OF CALIFORNIA
DEPARTMENT OF TRANSPORTATION

TRAFFIC CONTROL SYSTEM FOR MOVING LANE CLOSURE ON TWO LANE HIGHWAYS

NO SCALE

TCS-3

STATE OF CALIFORNIA - DEPARTMENT OF TRANSPORTATION
Caltrans

FUNCTIONAL SUPERVISOR
CALCULATED-DESIGNED BY
CHECKED BY
REVISED BY
DATE REVISED

LAST REVISION 00-00-00 DATE PLOTTED => 10-DEC-2012 TIME PLOTTED => 09:45

Dist	COUNTY	ROUTE	POST MILES TOTAL PROJECT	SHEET No.	TOTAL SHEETS
03	But	32	11.3/R15.5	18	23

REGISTERED CIVIL ENGINEER

April 20, 2012
PLANS APPROVAL DATE

REGISTERED PROFESSIONAL ENGINEER
Roberta L. McLaughlin
No. C40375
Exp. 3-31-13
CIVIL
STATE OF CALIFORNIA

THE STATE OF CALIFORNIA OR ITS OFFICERS OR AGENTS SHALL NOT BE RESPONSIBLE FOR THE ACCURACY OR COMPLETENESS OF SCANNED COPIES OF THIS PLAN SHEET.

TO ACCOMPANY PLANS DATED 3-4-13

2010 REVISED STANDARD PLAN RSP A24A

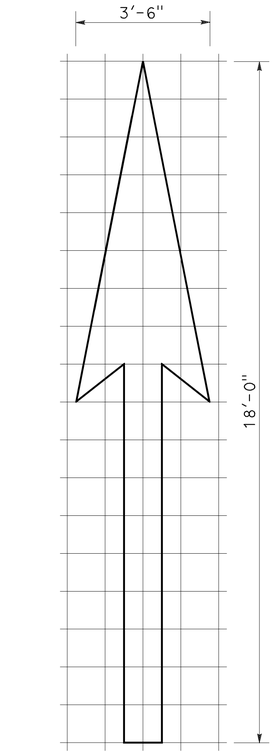

A=25 ft^2

TYPE I 18'-0" ARROW

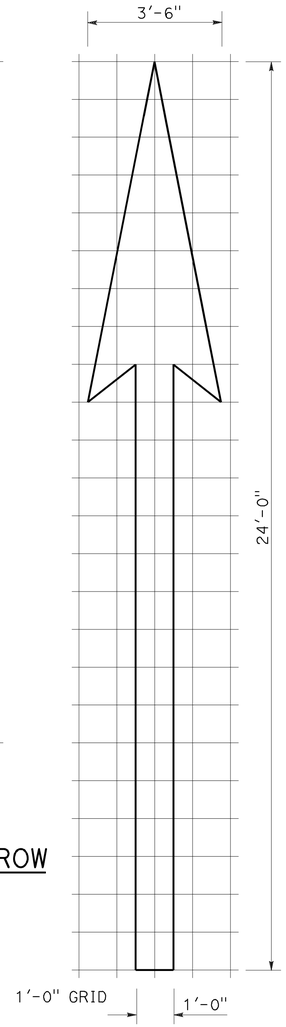

A=31 ft^2

TYPE I 24'-0" ARROW

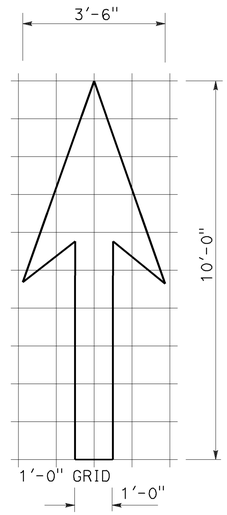

A=14 ft^2

TYPE I 10'-0" ARROW

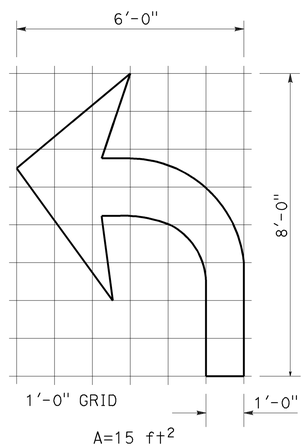

A=15 ft^2

TYPE IV (L) ARROW

(For Type IV (R) arrow, use mirror image)

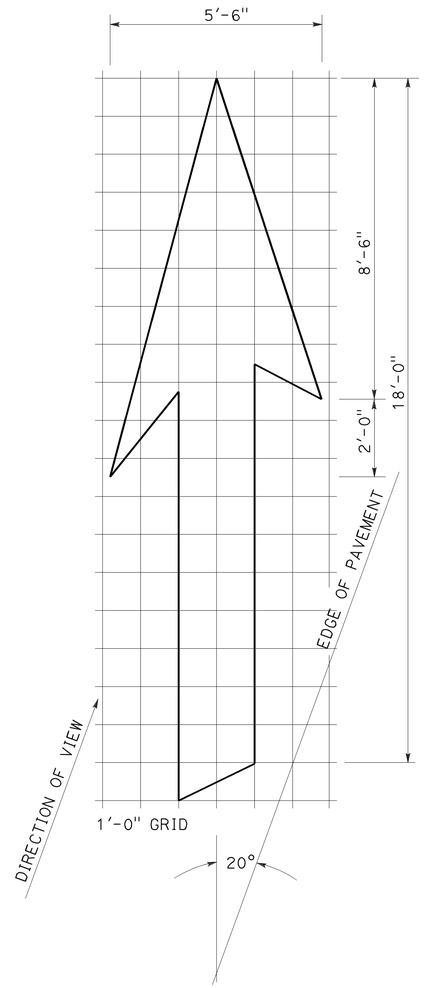

A=42 ft^2

TYPE VI ARROW

Right lane drop arrow
(For left lane, use mirror image)

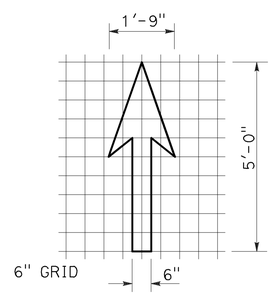

A=3.5 ft^2

BIKE LANE ARROW

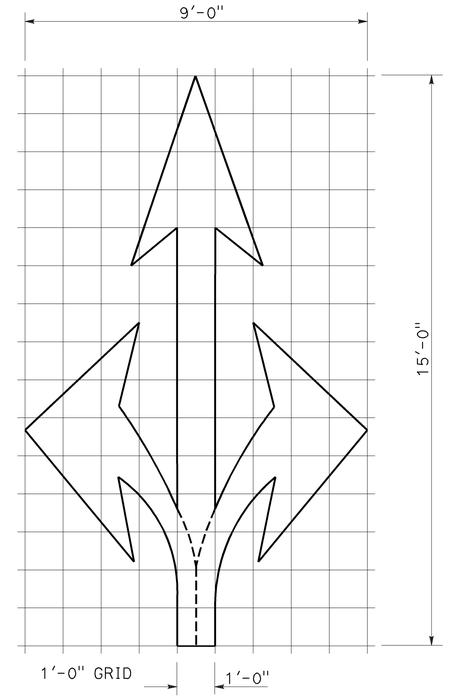

A=36 ft^2

TYPE VIII ARROW

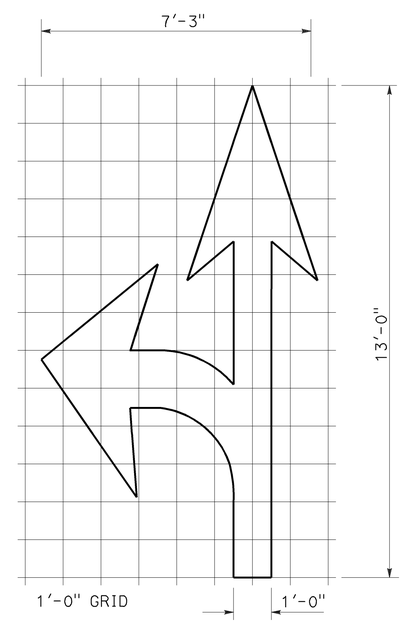

A=27 ft^2

TYPE VII (L) ARROW

(For Type VII (R) arrow, use mirror image)

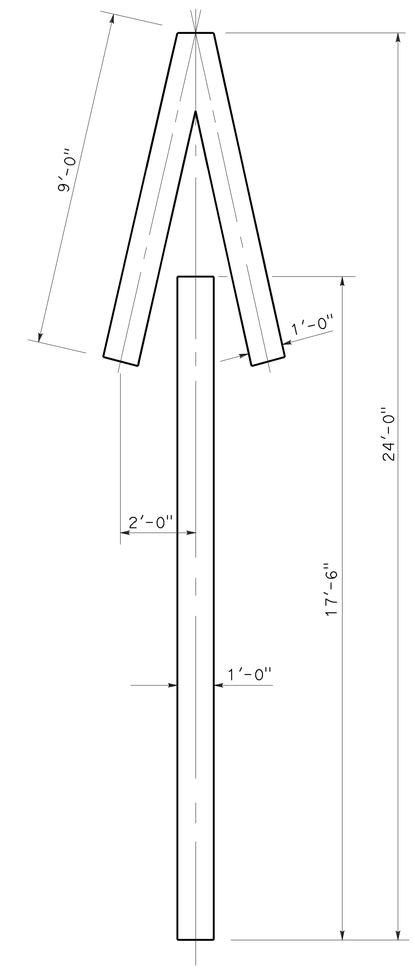

A=33 ft^2

TYPE V ARROW

NOTE:
Minor variations in dimensions may be accepted by the Engineer.

STATE OF CALIFORNIA
DEPARTMENT OF TRANSPORTATION

PAVEMENT MARKINGS ARROWS

NO SCALE

RSP A24A DATED APRIL 20, 2012 SUPERSEDES STANDARD PLAN A24A DATED MAY 20, 2011 - PAGE 13 OF THE STANDARD PLANS BOOK DATED 2010.

REVISED STANDARD PLAN RSP A24A

3-14-12

Dist	COUNTY	ROUTE	POST MILES TOTAL PROJECT	SHEET No.	TOTAL SHEETS
03	But	32	11.3/R15.5	19	23

REGISTERED CIVIL ENGINEER

July 20, 2012
PLANS APPROVAL DATE

REGISTERED PROFESSIONAL ENGINEER
Roberta L. McLaughlin
No. C40375
Exp. 3-31-13
CIVIL
STATE OF CALIFORNIA

THE STATE OF CALIFORNIA OR ITS OFFICERS OR AGENTS SHALL NOT BE RESPONSIBLE FOR THE ACCURACY OR COMPLETENESS OF SCANNED COPIES OF THIS PLAN SHEET.

TO ACCOMPANY PLANS DATED 3-4-13

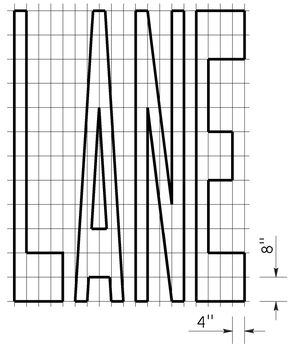

A=24 ft²

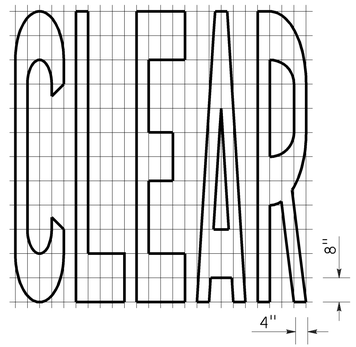

A=27 ft²

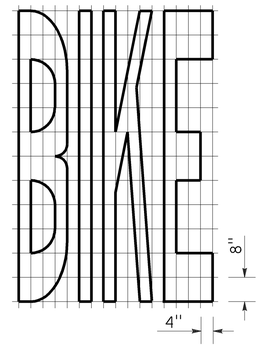

A=21 ft²

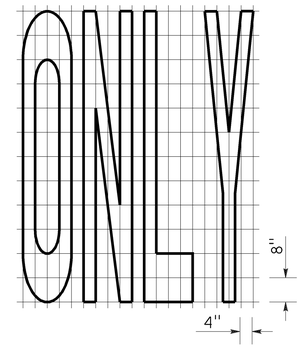

A=22 ft²

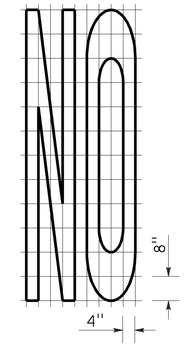

A=14 ft²

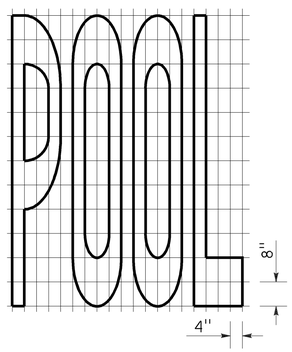

A=23 ft²

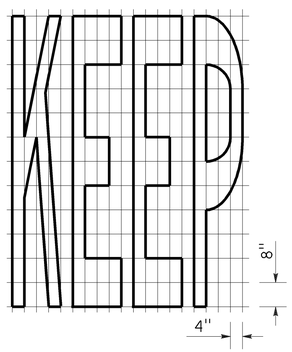

A=24 ft²

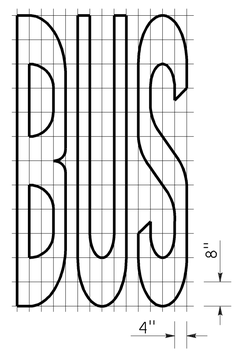

A=20 ft²

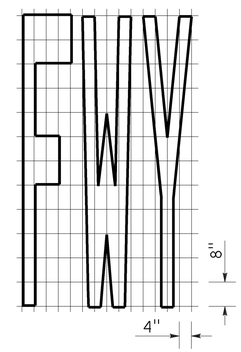

A=16 ft²

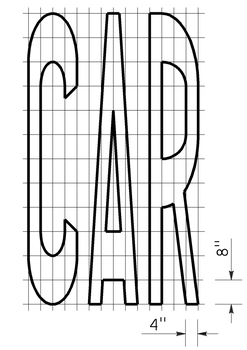

A=17 ft²

WORD MARKINGS			
ITEM	ft²	ITEM	ft²
LANE	24	NO	14
POOL	23	BIKE	21
CAR	17	BUS	20
CLEAR	27	ONLY	22
KEEP	24	FWY	16

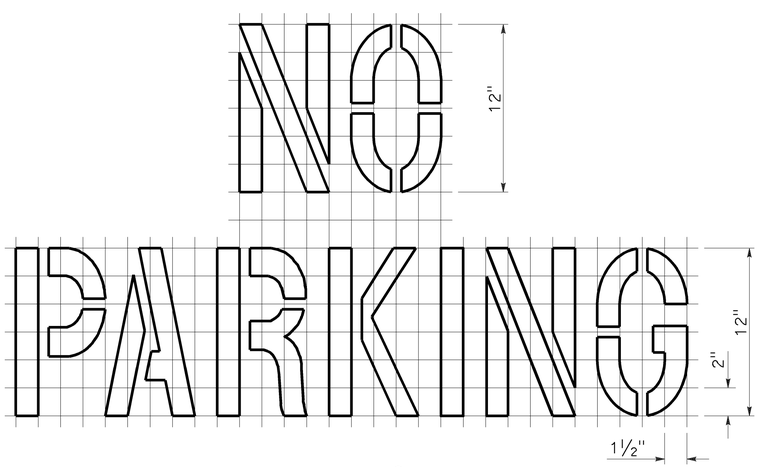

A=2 ft²
See Notes 6 and 7

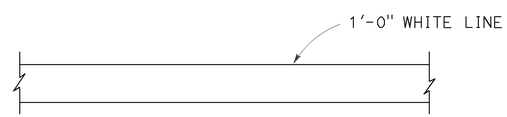

LIMIT LINE (STOP LINE)

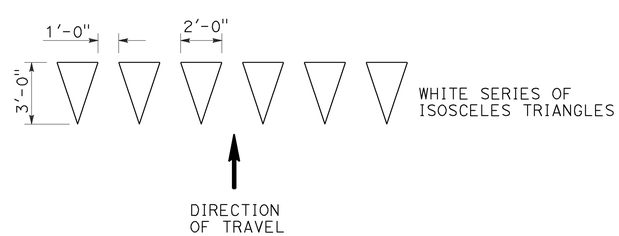

YIELD LINE

NOTES:

1. If a message consists of more than one word, it should read "UP", i.e., the first word should be nearest the driver.
2. The space between words should be at least four times the height of the characters for low speed roads, but not more than ten times the height of the characters. The space may be reduced appropriately where there is limited space because of local conditions.
3. Minor variations in dimensions may be accepted by the Engineer.
4. Portions of a letter, number or symbol may be separated by connecting segments not to exceed 2" in width.
5. The words "NO PARKING" pavement marking is to be used for parking facilities. For typical locations of markings, see Standard Plans A90A and A90B.
6. The words "NO PARKING", shall be painted in white letters no less than 1'-0" high on a contrasting background and located so that it is visible to traffic enforcement officials.

STATE OF CALIFORNIA
DEPARTMENT OF TRANSPORTATION

PAVEMENT MARKINGS WORDS, LIMIT AND YIELD LINES

NO SCALE

RSP A24E DATED JULY 20, 2012 SUPERSEDES STANDARD PLAN A24E
DATED MAY 20, 2011 - PAGE 17 OF THE STANDARD PLANS BOOK DATED 2010.

REVISED STANDARD PLAN RSP A24E

2010 REVISED STANDARD PLAN RSP A24E

6-12-12

Dist	COUNTY	ROUTE	POST MILES TOTAL PROJECT	SHEET No.	TOTAL SHEETS
03	But	32	11.3/R15.5	20	23

REGISTERED CIVIL ENGINEER

July 20, 2012
PLANS APPROVAL DATE

REGISTERED PROFESSIONAL ENGINEER
Roberta L. McLaughlin
No. C40375
Exp. 3-31-13
CIVIL
STATE OF CALIFORNIA

THE STATE OF CALIFORNIA OR ITS OFFICERS OR AGENTS SHALL NOT BE RESPONSIBLE FOR THE ACCURACY OR COMPLETENESS OF SCANNED COPIES OF THIS PLAN SHEET.

TO ACCOMPANY PLANS DATED 3-4-13

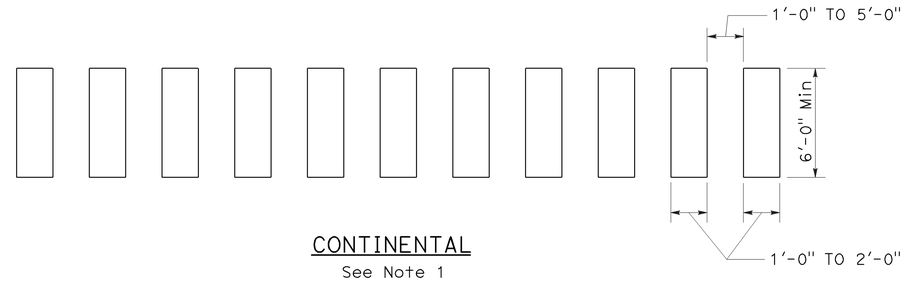

CONTINENTAL
See Note 1

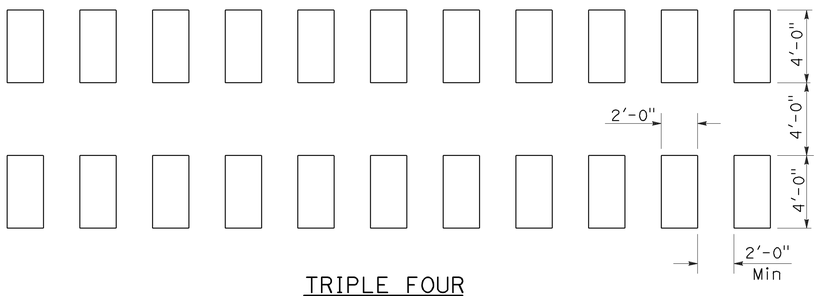

TRIPLE FOUR
See Note 1

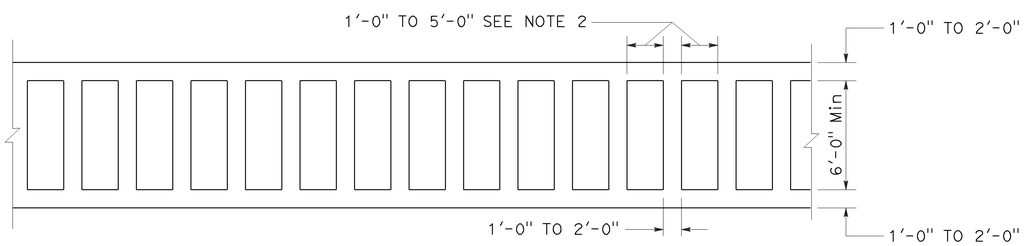

LADDER

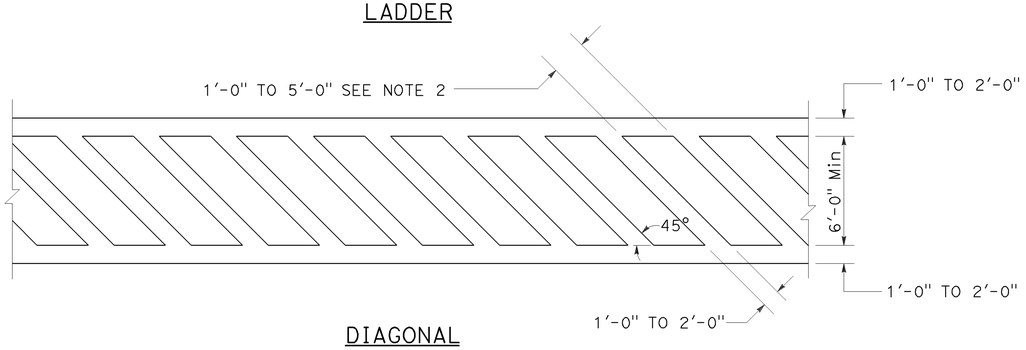

DIAGONAL

HIGHER VISIBILITY CROSSWALKS

NOTES:

1. Spaces between markings should be placed in wheel tracks of each lane.
2. Spacings not to exceed 2.5 times width of longitudinal line.
3. All crosswalk markings must be white except for those near schools must be yellow.

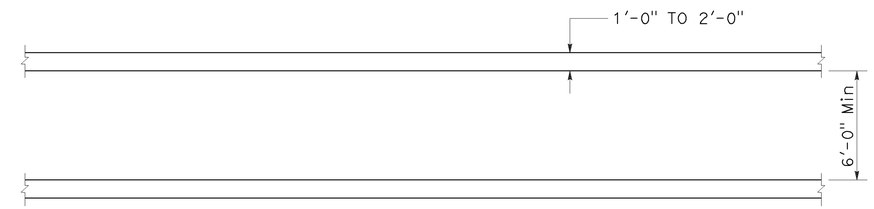

BASIC

STATE OF CALIFORNIA
DEPARTMENT OF TRANSPORTATION

PAVEMENT MARKINGS CROSSWALKS

NO SCALE

RSP A24F DATED JULY 20, 2012 SUPPLEMENTS THE STANDARD PLANS BOOK DATED 2010.

REVISED STANDARD PLAN RSP A24F

2010 REVISED STANDARD PLAN RSP A24F

6-28-12

DIST	COUNTY	ROUTE	POST MILES TOTAL PROJECT	SHEET No.	TOTAL SHEETS
03	But	32	11.3/R15.5	21	23

REGISTERED CIVIL ENGINEER

January 20, 2012
PLANS APPROVAL DATE

REGISTERED PROFESSIONAL ENGINEER Cornelis M. Hakim No. C55610 Exp. 12-31-12 CIVIL STATE OF CALIFORNIA

THE STATE OF CALIFORNIA OR ITS OFFICERS OR AGENTS SHALL NOT BE RESPONSIBLE FOR THE ACCURACY OR COMPLETENESS OF SCANNED COPIES OF THIS PLAN SHEET.

TO ACCOMPANY PLANS DATED 3-4-13

2010 REVISED STANDARD PLAN RSP P75

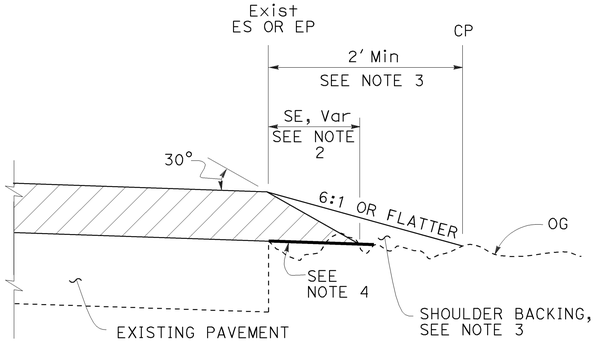

CASE A
Safety Edge

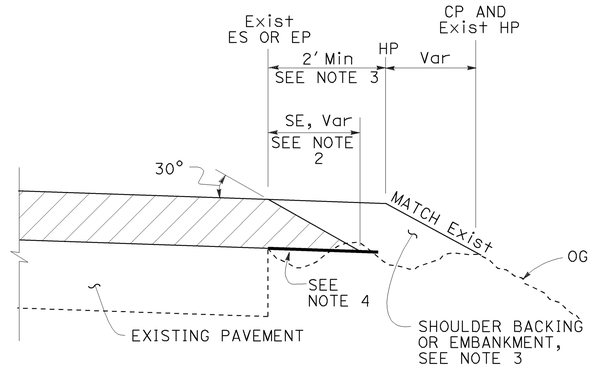

CASE B
Safety Edge

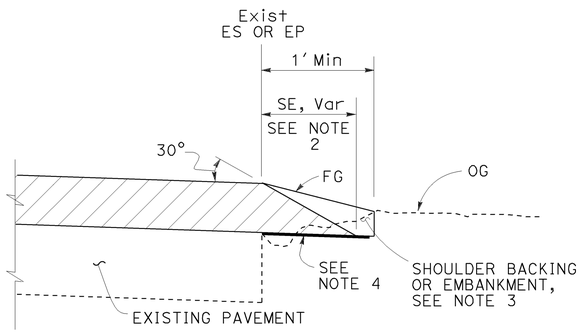

CASE C
Safety Edge

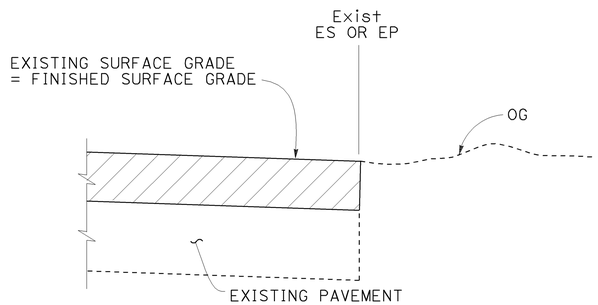

CASE D
Vertical Edge

LEGEND:

- HMA OVERLAY
- HMA OR CONCRETE OVERLAY
- CONCRETE OVERLAY

ABBREVIATIONS:

SE SAFETY EDGE
TT TOTAL THICKNESS OF SE

TABLE A
EDGE TREATMENT FOR VARIOUS OVERLAY THICKNESS AND CONDITIONS

	OVERLAY THICKNESS	
FIELD CONDITION	LESS THAN 0.15'	0.15' OR MORE
Exist SLOPE 6:1 OR FLATTER	CASE E	CASE A
Exist SLOPE 3:1 TO 6:1	CASE E	CASE B
Exist SLOPE STEEPER THAN 3:1	CASE F	CASE F
CUT SECTION (REPLACE, COLD PLANE, MILL PAVEMENT)	CASE D	CASE C

ADDITIONAL HMA OR CONCRETE QUANTITIES FOR SE/SIDE/MILE

TYPICAL CROSS SECTION	TT	TOTAL ADDITIONAL MATERIAL FOR SE/SIDE/MILE		
		HMA (TON)	CONCRETE (CY)*	CONCRETE (CY)**
TT	0.15'	NA	NA	NA
	0.20'	13.7	NA	NA
	0.30'	30.9	NA	NA
	0.40'	54.9	NA	NA
	0.45'	69.4	NA	NA
TT 0.43'	0.50'	84.2	NA	NA
	0.60'	113.9	NA	NA
	0.70'	143.6	70.9	94.2
	0.80'	173.3	85.6	112.2
	0.90'	203.0	100.3	130.2
	1.00'	232.7	114.9	148.2
	1.10'	262.4	129.6	166.2
	1.20'	292.1	144.3	184.2

* For Detail "A"
** For Optional Detail "A"

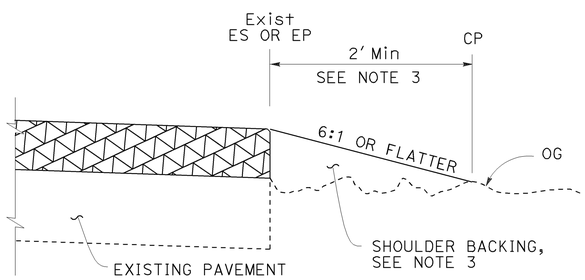

CASE E
Vertical Edge

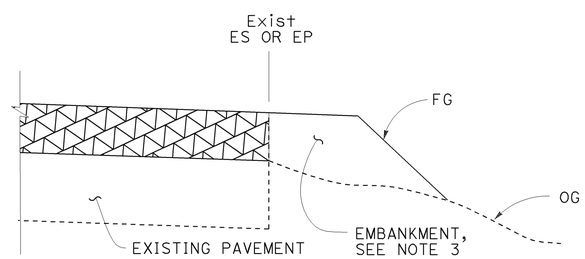

CASE F
Vertical Edge
* See Table A and Revised Std Plan RSP P74

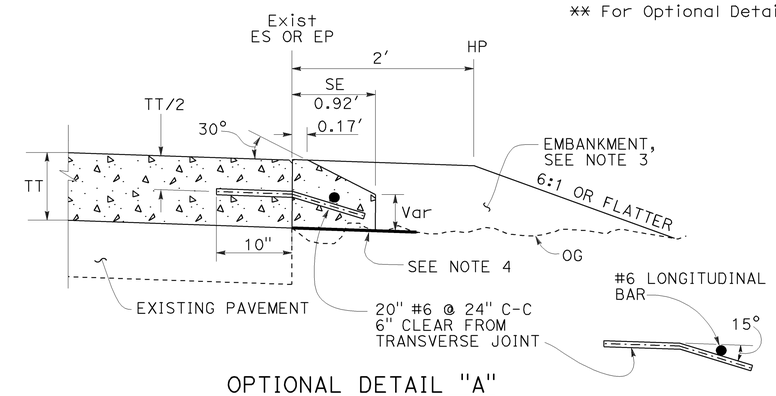

OPTIONAL DETAIL "A"
For concrete overlay
See Note 5

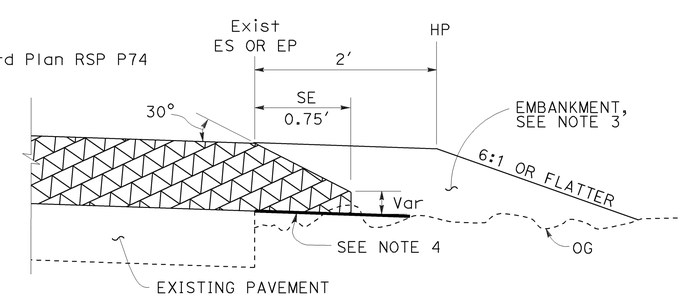

DETAIL "A"
For HMA overlay thickness more than 0.43' or concrete overlay

NOTES:

1. For limits of safety edge and vertical edge treatments, see Revised Standard Plan RSP P74.
2. Details shown for HMA overlay thickness less than 0.43'. See Detail "A" for HMA overlay thickness more than 0.43' or concrete overlay.
3. For locations and limits of shoulder backing or embankment see project plans.
4. Grade existing ground to place safety edge. 1' minimum width
5. Safety edge transverse joint must match overlay transverse joint. End of #6 longitudinal bar must be 2" ±½" clear from transverse joint.
6. Safety edge is not needed in the area of MBGR, barrier, right turn lane and acceleration lane. See Revised Standard Plan RSP P74.

STATE OF CALIFORNIA
DEPARTMENT OF TRANSPORTATION

PAVEMENT EDGE TREATMENTS-OVERLAYS

NO SCALE

RSP P75 DATED JANUARY 20, 2012 SUPPLEMENTS THE STANDARD PLANS BOOK DATED 2010.

REVISED STANDARD PLAN RSP P75

01-09-12

DIST	COUNTY	ROUTE	POST MILES TOTAL PROJECT	SHEET No.	TOTAL SHEETS
03	But	32	11.3/R15.5	22	23

REGISTERED CIVIL ENGINEER

January 20, 2012
PLANS APPROVAL DATE

REGISTERED PROFESSIONAL ENGINEER Cornelis M. Hakim No. C55610 Exp. 12-31-12 CIVIL STATE OF CALIFORNIA

THE STATE OF CALIFORNIA OR ITS OFFICERS OR AGENTS SHALL NOT BE RESPONSIBLE FOR THE ACCURACY OR COMPLETENESS OF SCANNED COPIES OF THIS PLAN SHEET.

TO ACCOMPANY PLANS DATED 3-4-13

2010 REVISED STANDARD PLAN RSP P74

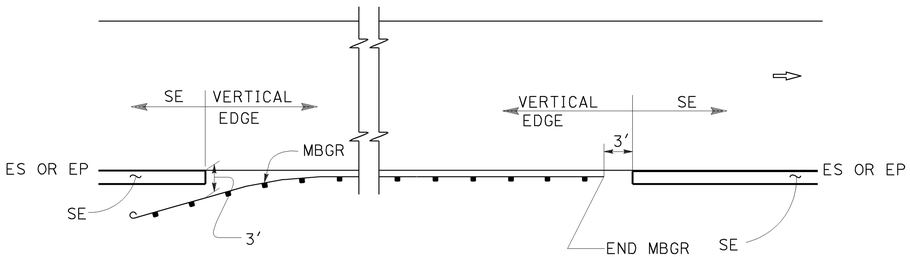

MBGR

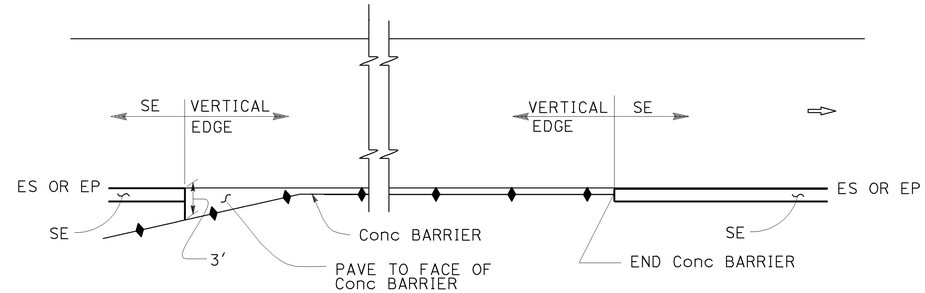

CONCRETE BARRIER

ABBREVIATIONS:

SE SAFETY EDGE

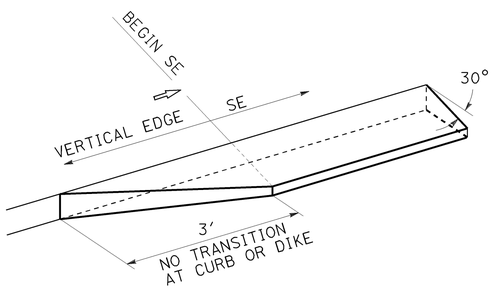

TRANSITION DETAIL FOR CONCRETE ONLY

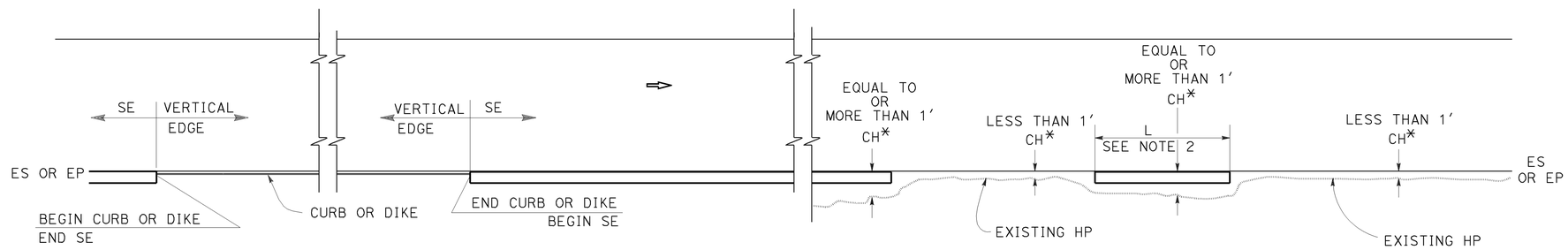

CURB OR DIKE

NARROW SIDE SLOPE

* CH = Distance from ES or EP to existing HP.

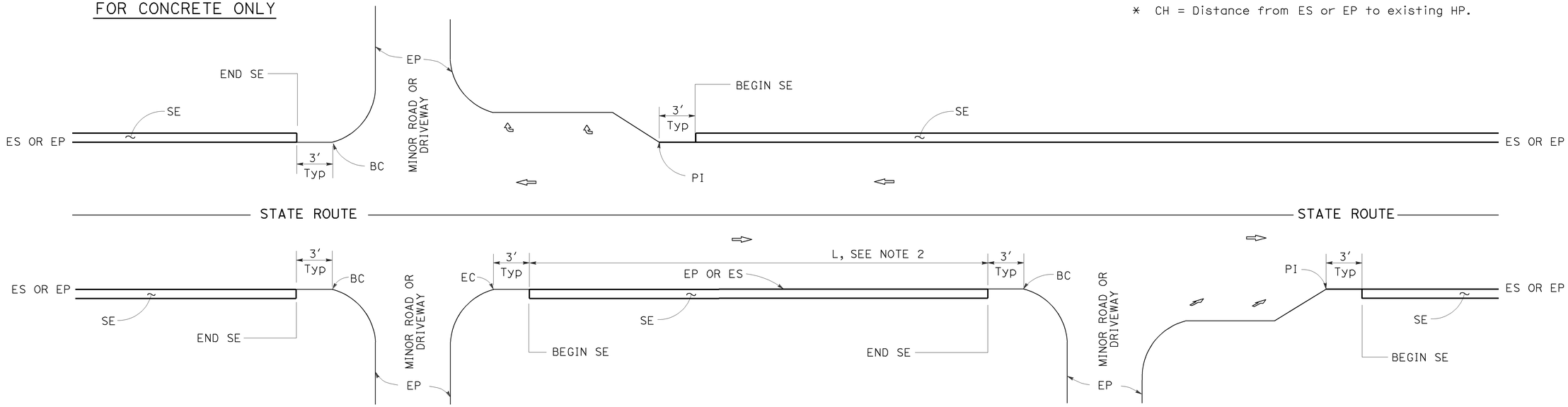

INTERSECTION

DRIVEWAY AND INTERSECTION

MINOR ROADWAY OR DRIVEWAY

NOTES:

1. For details not shown, see Revised Standard Plans RSP P75 and RSP P76.
2. Safety edge is optional when L is less than 30′.

STATE OF CALIFORNIA
DEPARTMENT OF TRANSPORTATION

PAVEMENT EDGE TREATMENTS

NO SCALE

RSP P74 DATED JANUARY 20, 2012 SUPPLEMENTS THE STANDARD PLANS BOOK DATED 2010.

REVISED STANDARD PLAN RSP P74

01-05-12

DIST	COUNTY	ROUTE	POST MILES TOTAL PROJECT	SHEET NO.	TOTAL SHEETS
03	But	32	11.3/R15.5	23	23

REGISTERED ELECTRICAL ENGINEER

January 20, 2012
PLANS APPROVAL DATE

REGISTERED PROFESSIONAL ENGINEER Jeffery G. McRae No. E14512 Exp. 6-30-12 ELECTRICAL STATE OF CALIFORNIA

THE STATE OF CALIFORNIA OR ITS OFFICERS OR AGENTS SHALL NOT BE RESPONSIBLE FOR THE ACCURACY OR COMPLETENESS OF SCANNED COPIES OF THIS PLAN SHEET.

TO ACCOMPANY PLANS DATED 3-4-13

2010 REVISED STANDARD PLAN RSP ES-8A

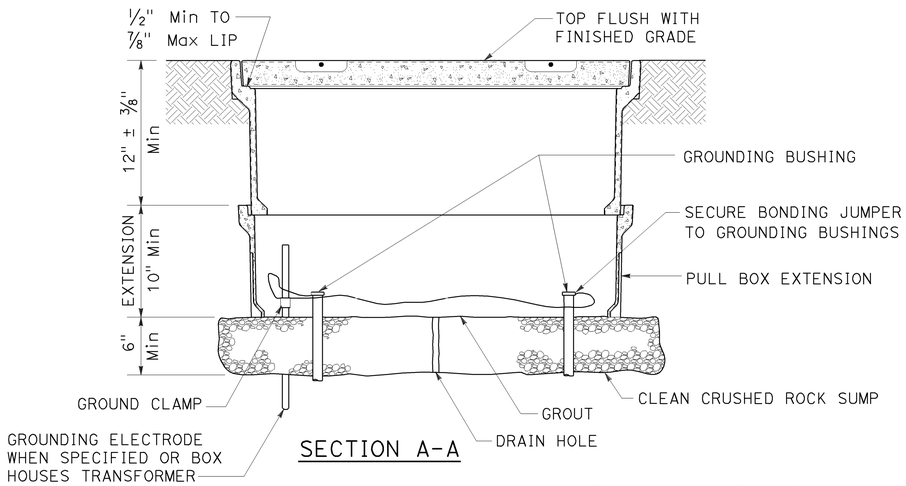

SECTION A-A

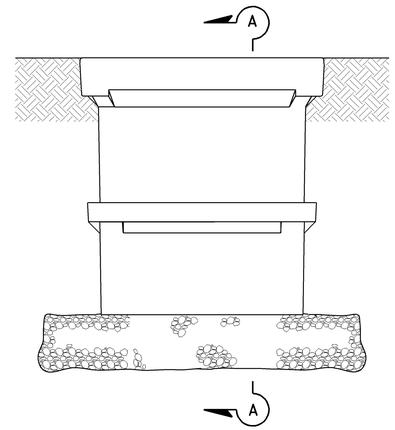

SIDE VIEW

INSTALLATION DETAILS

DETAIL A

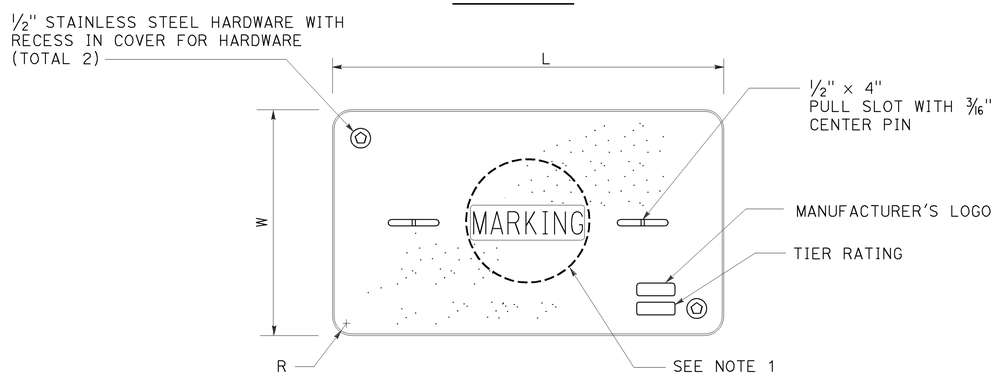

COVER TOP VIEW

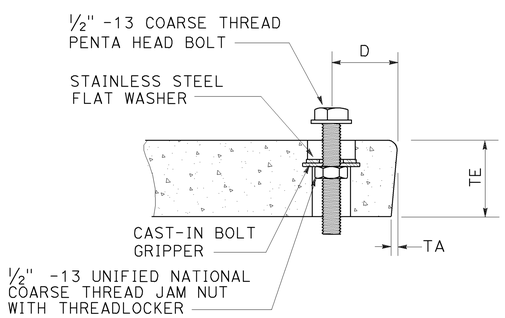

TYPICAL COVER CAPTIVE BOLT

OR SIMILAR

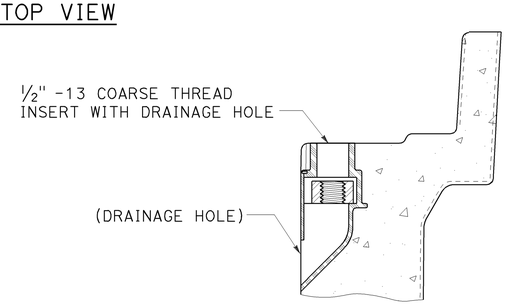

TYPICAL THREADED INSERT

OR SIMILAR

DIMENSION TABLE										
PULL BOX	PULL BOX			COVER						
	MINIMUM DEPTH BOX	MINIMUM DEPTH EXTENSION	MAXIMUM WEIGHT	L	W	R	TE	TA	D	MAXIMUM WEIGHT
No. 3½	12"	N/A	40 lb	1' - 3⅜"	10⅛"	1⅜"	2"	⅛"	1¾"	30 lb
No. 5	12"	10"	55 lb	1' - 11¼"	1' - 1¾"	1⅜"	2"	⅛"	1¾"	60 lb
No. 6	12"	10"	70 lb	2' - 6½"	1' - 5½"	1⅜"	2"	⅛"	2"	85 lb

NOTES ON PULL BOXES:

1. Pull box covers must be marked as follows: "SERVICE" Service circuits between service point and service disconnect; "SPRINKLER-CONTROL" sprinkler control circuits, 50 V or less; "CALTRANS" on all pull boxes, except pull boxes marked "SPRINKLER-CONTROL"; and "TELEPHONE" Telephone service;

   A) No. 3½ pull box.
      1) "SIGNAL" - Traffic signal circuits with or without street or sign lighting circuits.
      2) "ST LIGHTING" - Street or sign lighting circuits where voltage is under 600 V.

   B) No. 5, 6, 9 or 9A pull box.
      1) "TRAFFIC SIGNAL" - Traffic signal circuits with or without street or sign lighting circuits.
      2) "STREET LIGHTING" - Street or sign lighting circuits where voltage is under 600 V.
      3) "STREET LIGHTING-HIGH VOLTAGE" - Street or sign lighting circuits where voltage is above 600 V.
      4) "IRRIGATION" - Circuits to irrigation controller 120 V or more.
      5) "RAMP METER" - Ramp meter circuits.
      6) "COUNT STATION" - Count or speed monitor circuits.
      7) "COMMUNICATIONS" - Communication circuits.
      8) "TOS COMMUNICATIONS" - TOS communication line.
      9) "TOS POWER" - TOS power.
      10) "TDC POWER" - Telephone demarcation cabinet power.
      11) "CCTV" - Closed circuit television circuits.
      12) "TMS" - Traffic monitoring station circuits.
      13) "CMS" - Changeable message sign circuits.
      14) "HAR" - Highway advisory radio circuits.

2. The nominal dimensions of the opening in which the cover sets must be the same as the cover dimensions (L and W) plus ⅛" or greater.

3. Covers and boxes must be interchangeable with California Standard. When interchanged with a standard, the top surfaces must be flush within ⅛". Top outside radius of covers and pull boxes must have a ⅛" radius.

4. Pull box extension may be another pull box as long as the bottom edge of the pull box can fit into the cover opening.

STATE OF CALIFORNIA
DEPARTMENT OF TRANSPORTATION

ELECTRICAL SYSTEMS (PULL BOX)

NO SCALE

RSP ES-8A DATED JANUARY 20, 2012 SUPPLEMENTS THE STANDARD PLANS BOOK DATED 2010.

REVISED STANDARD PLAN RSP ES-8A