Dist	COUNTY	ROUTE	POST MILES TOTAL PROJECT	SHEET No.	TOTAL SHEETS
03	Sie	89	27.2/29.6	1	18

INDEX OF PLANS

SHEET No.	DESCRIPTION
1	TITLE AND LOCATION MAP
2-10	DRAINAGE PROFILES
11	DRAINAGE DETAILS
12-13	DRAINAGE QUANTITIES
14-18	REVISED STANDARD PLANS

THE STANDARD PLANS LIST APPLICABLE TO THIS CONTRACT IS INCLUDED IN THE NOTICE TO BIDDERS AND SPECIAL PROVISIONS BOOK.

STATE OF CALIFORNIA

DEPARTMENT OF TRANSPORTATION

PROJECT PLANS FOR CONSTRUCTION ON

STATE HIGHWAY

IN SIERRA COUNTY
NEAR GRAEAGLE
FROM SULPHER CREEK ROAD
TO PLUMAS COUNTY LINE

TO BE SUPPLEMENTED BY STANDARD PLANS DATED 2010

LOCATION MAP

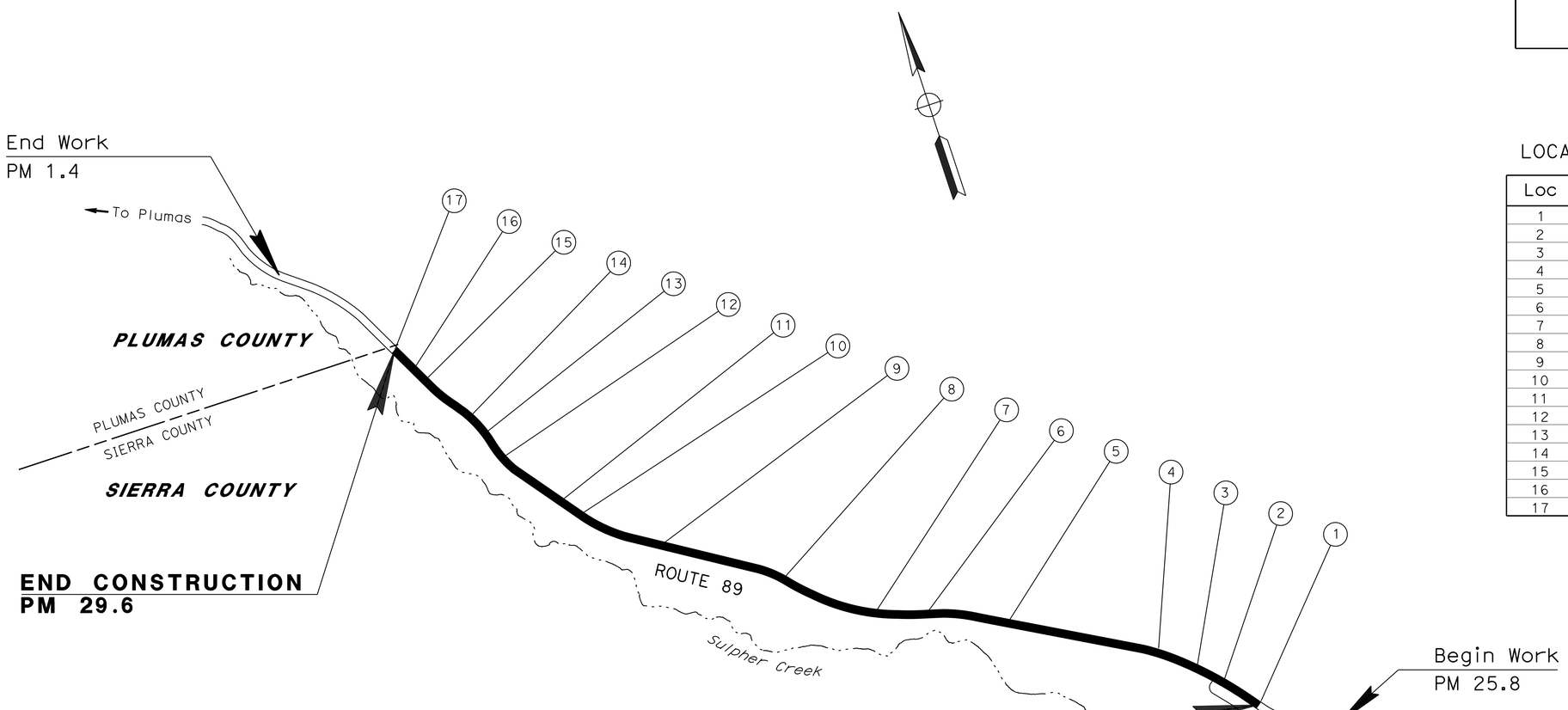

NO SCALE

LOCATIONS OF CONSTRUCTION

Loc	Co	ROUTE	POST MILE
1	Sie	89	27.40
2	Sie	89	27.60
3	Sie	89	27.65
4	Sie	89	27.72
5	Sie	89	28.26
6	Sie	89	28.42
7	Sie	89	28.50
8	Sie	89	28.68
9	Sie	89	28.92
10	Sie	89	29.09
11	Sie	89	29.10
12	Sie	89	29.26
13	Sie	89	29.31
14	Sie	89	29.36
15	Sie	89	29.46
16	Sie	89	29.49
17	Sie	89	29.54

PROJECT MANAGER RONALD S. SYKES

DESIGN ENGINEER JIM FERREIRA

James M Ferreira 2-20-14
PROJECT ENGINEER DATE
REGISTERED CIVIL ENGINEER

March 3, 2014
PLANS APPROVAL DATE

REGISTERED PROFESSIONAL ENGINEER JIM FERREIRA No. C48257 Exp. 6-30-14 CIVIL STATE OF CALIFORNIA

THE STATE OF CALIFORNIA OR ITS OFFICERS OR AGENTS SHALL NOT BE RESPONSIBLE FOR THE ACCURACY OR COMPLETENESS OF SCANNED COPIES OF THIS PLAN SHEET.

THE CONTRACTOR SHALL POSSESS THE CLASS (OR CLASSES) OF LICENSE AS SPECIFIED IN THE "NOTICE TO BIDDERS."

CONTRACT No.	03-4M2604
PROJECT ID	0300020466

LAST REVISION 01-30-13 DATE PLOTTED => 03-MAR-2014 TIME PLOTTED => 09:59

Dist	COUNTY	ROUTE	POST MILES TOTAL PROJECT	SHEET No.	TOTAL SHEETS
03	Sie	89	27.2/29.6	2	18

James M. Ferreira 2-20-14
REGISTERED CIVIL ENGINEER DATE

3-3-14
PLANS APPROVAL DATE

REGISTERED PROFESSIONAL ENGINEER
JIM FERREIRA
No. C48257
Exp. 6-30-14
CIVIL
STATE OF CALIFORNIA

THE STATE OF CALIFORNIA OR ITS OFFICERS OR AGENTS SHALL NOT BE RESPONSIBLE FOR THE ACCURACY OR COMPLETENESS OF SCANNED COPIES OF THIS PLAN SHEET.

NOTES:

1. SURVEY ELEVATIONS ARE ACCURATE RELATIVE TO AN ASSUMED SETUP ELEVATION OF 100.00.
2. FOR ACCURATE RIGHT OF WAY DATA, CONTACT RIGHT OF WAY ENGINEERING AT THE DISTRICT OFFICE.

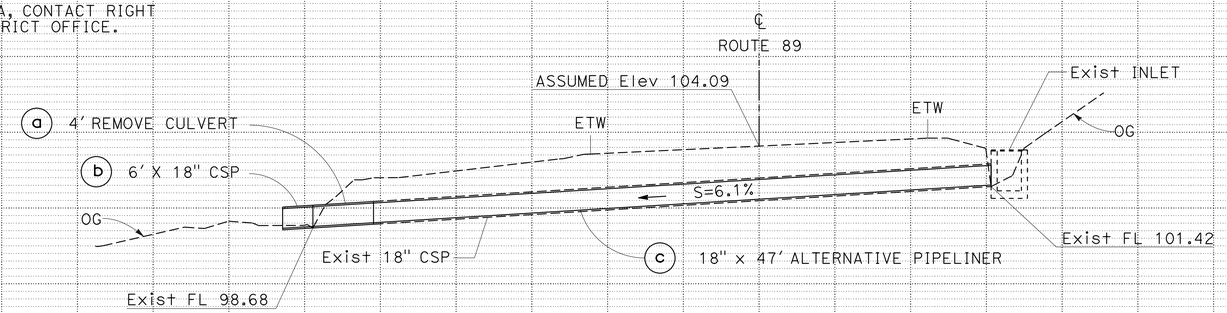

DRAINAGE SYSTEM No. 1

PM 27.40

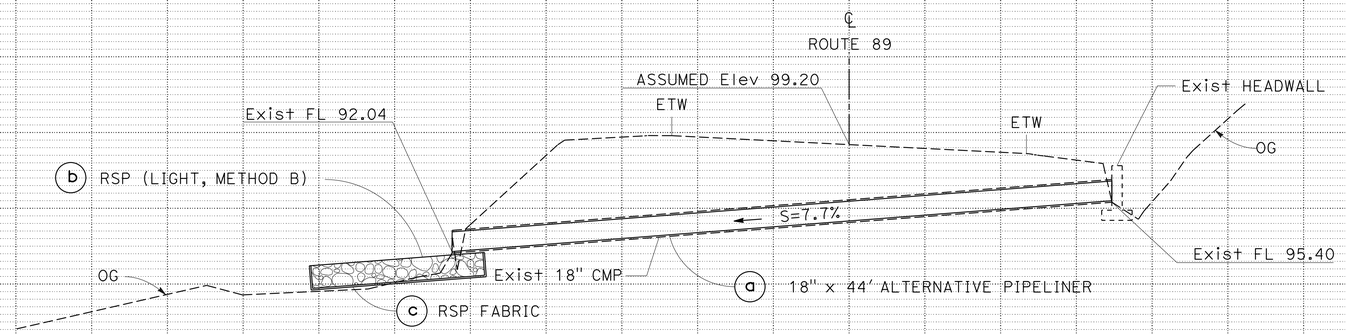

DRAINAGE SYSTEM No. 2

PM 27.60

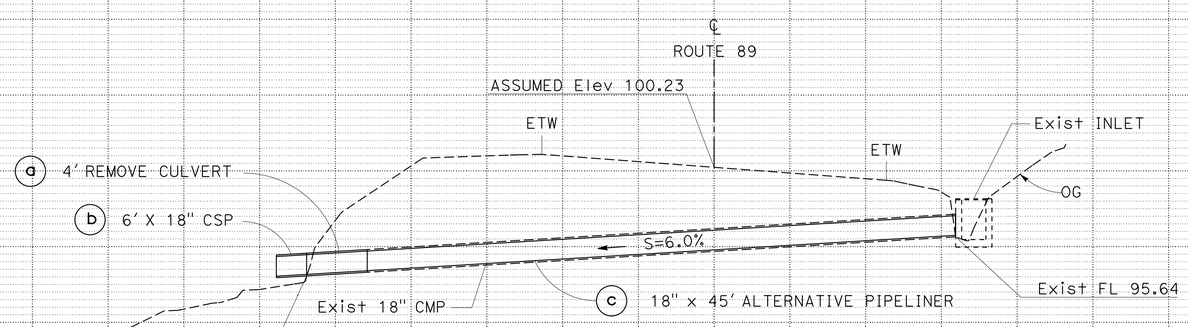

DRAINAGE SYSTEM No. 3

PM 27.65

40 30 20 10 0 10 20 30

DRAINAGE PROFILES

SCALE: Horiz 1" = 5'
Vert 1" = 5'

DP-1

REVISED BY | DATE REVISED
JIM FERREIRA | RONALD S. SYKES
CALCULATED-DESIGNED BY | CHECKED BY
FUNCTIONAL SUPERVISOR | RONALD S. SYKES

STATE OF CALIFORNIA - DEPARTMENT OF TRANSPORTATION
Caltrans® MAINTENANCE DESIGN

LAST REVISION 00-00-00 | DATE PLOTTED => 03-MAR-2014 | TIME PLOTTED => 09:59

Dist	COUNTY	ROUTE	POST MILES TOTAL PROJECT	SHEET No.	TOTAL SHEETS
03	Sie	89	27.2/29.6	3	18

James M. Ferreira 2-20-14
REGISTERED CIVIL ENGINEER DATE

3-3-14
PLANS APPROVAL DATE

REGISTERED PROFESSIONAL ENGINEER
JIM FERREIRA
No. C48257
Exp. 6-30-14
CIVIL
STATE OF CALIFORNIA

THE STATE OF CALIFORNIA OR ITS OFFICERS OR AGENTS SHALL NOT BE RESPONSIBLE FOR THE ACCURACY OR COMPLETENESS OF SCANNED COPIES OF THIS PLAN SHEET.

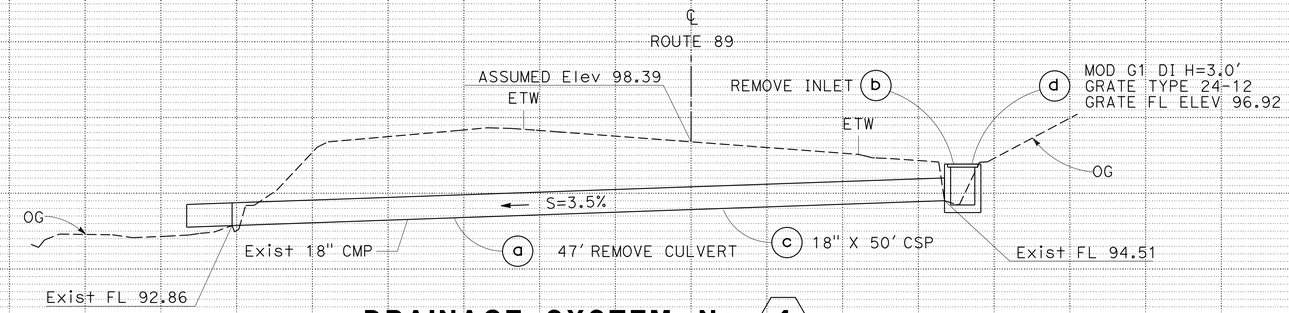

DRAINAGE SYSTEM No. 4

PM 27.72

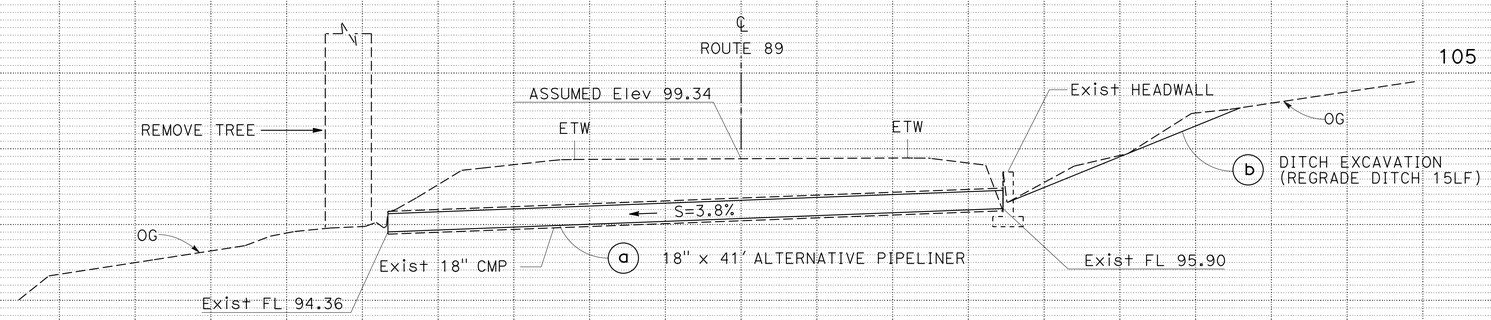

DRAINAGE SYSTEM No. 5

PM 28.26

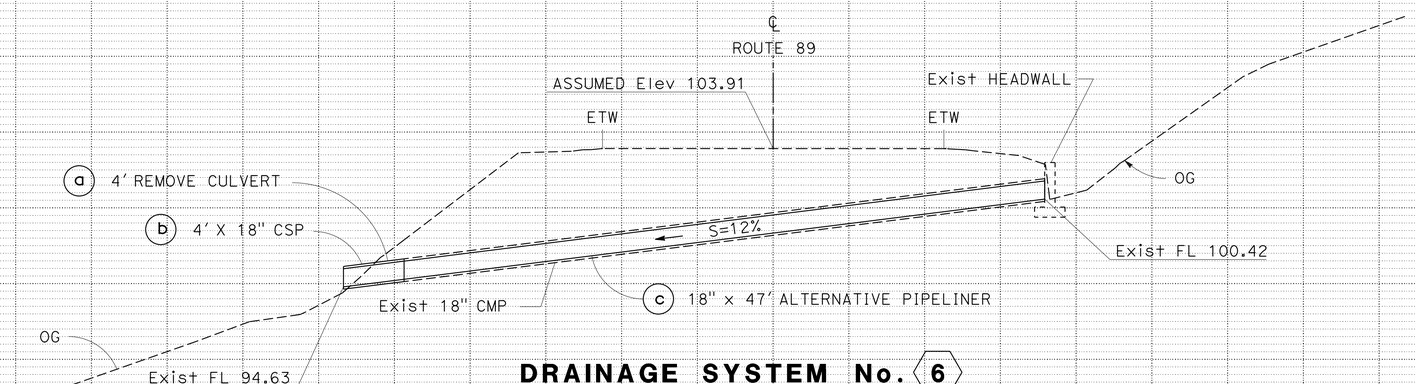

DRAINAGE SYSTEM No. 6

PM 28.42

DRAINAGE PROFILES

SCALE: Horiz 1" = 5'
Vert 1" = 5'

DP-2

REVISED BY | DATE REVISED
JIM FERREIRA | RONALD S. SYKES
CALCULATED-DESIGNED BY | CHECKED BY
FUNCTIONAL SUPERVISOR | RONALD S. SYKES

STATE OF CALIFORNIA - DEPARTMENT OF TRANSPORTATION
Caltrans® MAINTENANCE DESIGN

LAST REVISION 00-00-00 | DATE PLOTTED => 03-MAR-2014 | TIME PLOTTED => 09:59

Dist	COUNTY	ROUTE	POST MILES TOTAL PROJECT	SHEET No.	TOTAL SHEETS
03	Sie	89	27.2/29.6	4	18

James M. Ferreira 2-20-14
REGISTERED CIVIL ENGINEER DATE

3-3-14
PLANS APPROVAL DATE

REGISTERED PROFESSIONAL ENGINEER
JIM FERREIRA
No. C48257
Exp. 6-30-14
CIVIL
STATE OF CALIFORNIA

THE STATE OF CALIFORNIA OR ITS OFFICERS OR AGENTS SHALL NOT BE RESPONSIBLE FOR THE ACCURACY OR COMPLETENESS OF SCANNED COPIES OF THIS PLAN SHEET.

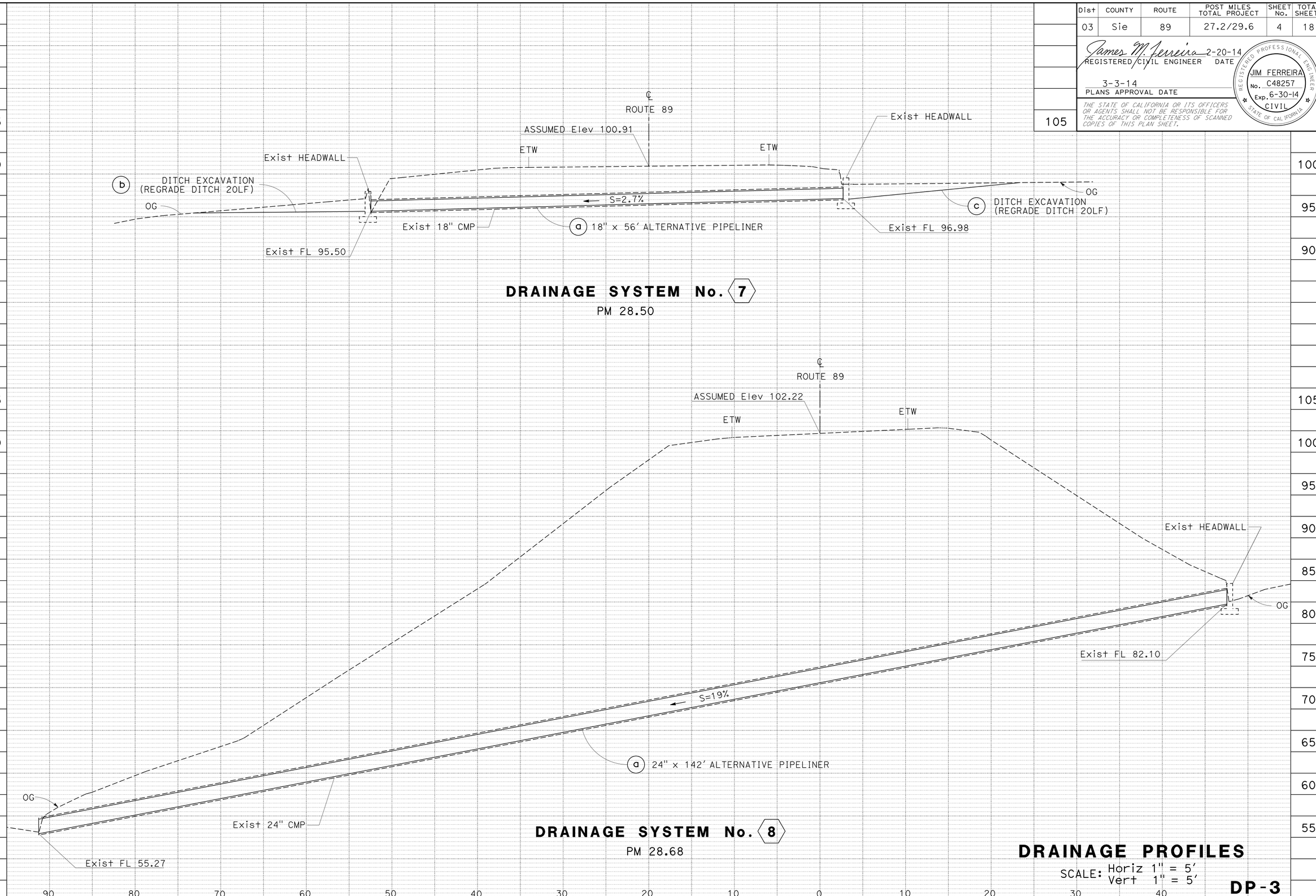

DRAINAGE PROFILES

SCALE: Horiz 1" = 5'
Vert 1" = 5'

DP-3

STATE OF CALIFORNIA - DEPARTMENT OF TRANSPORTATION
Caltrans® MAINTENANCE DESIGN

FUNCTIONAL SUPERVISOR: RONALD S. SYKES
CALCULATED-DESIGNED BY: JIM FERREIRA
CHECKED BY: RONALD S. SYKES
REVISED BY / DATE REVISED

LAST REVISION 00-00-00
DATE PLOTTED => 03-MAR-2014
TIME PLOTTED => 09:59

Dist	COUNTY	ROUTE	POST MILES TOTAL PROJECT	SHEET No.	TOTAL SHEETS
03	Sie	89	27.2/29.6	5	18

James M. Ferreira 2-20-14
REGISTERED CIVIL ENGINEER DATE

3-3-14
PLANS APPROVAL DATE

REGISTERED PROFESSIONAL ENGINEER
JIM FERREIRA
No. C48257
Exp. 6-30-14
CIVIL
STATE OF CALIFORNIA

THE STATE OF CALIFORNIA OR ITS OFFICERS OR AGENTS SHALL NOT BE RESPONSIBLE FOR THE ACCURACY OR COMPLETENESS OF SCANNED COPIES OF THIS PLAN SHEET.

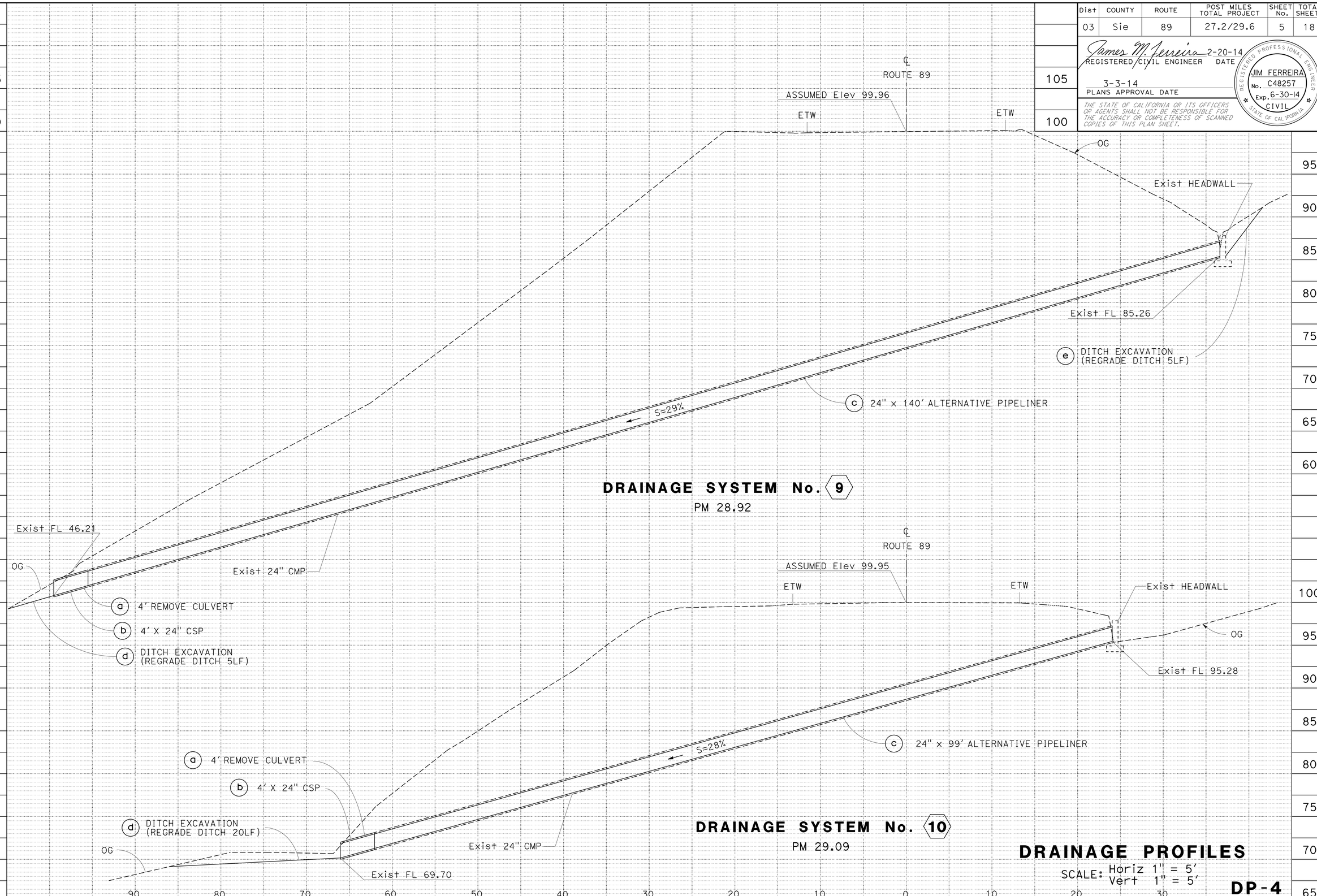

DRAINAGE PROFILES

SCALE: Horiz 1" = 5'
Vert 1" = 5'

DP-4

STATE OF CALIFORNIA - DEPARTMENT OF TRANSPORTATION
Caltrans® MAINTENANCE DESIGN

FUNCTIONAL SUPERVISOR: RONALD S. SYKES
CALCULATED-DESIGNED BY: JIM FERREIRA
CHECKED BY: RONALD S. SYKES
REVISED BY
DATE REVISED

LAST REVISION 00-00-00
DATE PLOTTED => 03-MAR-2014
TIME PLOTTED => 09:59

Dist	COUNTY	ROUTE	POST MILES TOTAL PROJECT	SHEET No.	TOTAL SHEETS
03	Sie	89	27.2/29.6	6	18

James M. Ferreira 2-20-14
REGISTERED CIVIL ENGINEER DATE

3-3-14
PLANS APPROVAL DATE

REGISTERED PROFESSIONAL ENGINEER
JIM FERREIRA
No. C48257
Exp. 6-30-14
CIVIL
STATE OF CALIFORNIA

THE STATE OF CALIFORNIA OR ITS OFFICERS OR AGENTS SHALL NOT BE RESPONSIBLE FOR THE ACCURACY OR COMPLETENESS OF SCANNED COPIES OF THIS PLAN SHEET.

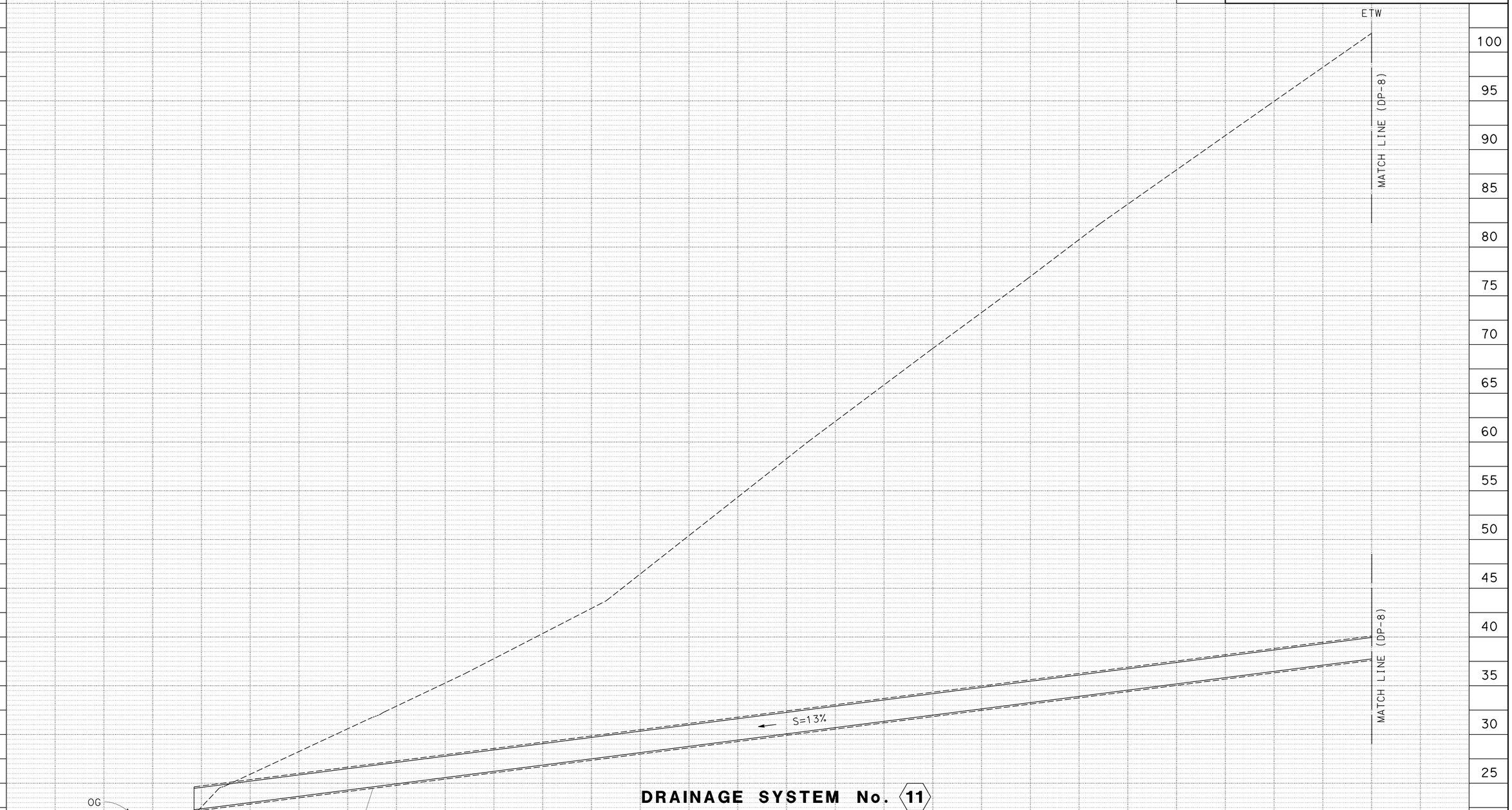

DRAINAGE SYSTEM No. 11

PM 29.10

DRAINAGE PROFILES

SCALE: Horiz 1" = 5'
Vert 1" = 5'

DP-5

STATE OF CALIFORNIA - DEPARTMENT OF TRANSPORTATION
Caltrans® **MAINTENANCE DESIGN**

FUNCTIONAL SUPERVISOR: RONALD S. SYKES

CALCULATED-DESIGNED BY: JIM FERREIRA
CHECKED BY: RONALD S. SYKES

REVISED BY
DATE REVISED

LAST REVISION 00-00-00 DATE PLOTTED => 03-MAR-2014 TIME PLOTTED => 10:00

Dist	COUNTY	ROUTE	POST MILES TOTAL PROJECT	SHEET No.	TOTAL SHEETS
03	Sie	89	27.2/29.6	7	18

James M. Ferreira 2-20-14
REGISTERED CIVIL ENGINEER DATE

3-3-14
PLANS APPROVAL DATE

REGISTERED PROFESSIONAL ENGINEER
JIM FERREIRA
No. C48257
Exp. 6-30-14
CIVIL
STATE OF CALIFORNIA

THE STATE OF CALIFORNIA OR ITS OFFICERS OR AGENTS SHALL NOT BE RESPONSIBLE FOR THE ACCURACY OR COMPLETENESS OF SCANNED COPIES OF THIS PLAN SHEET.

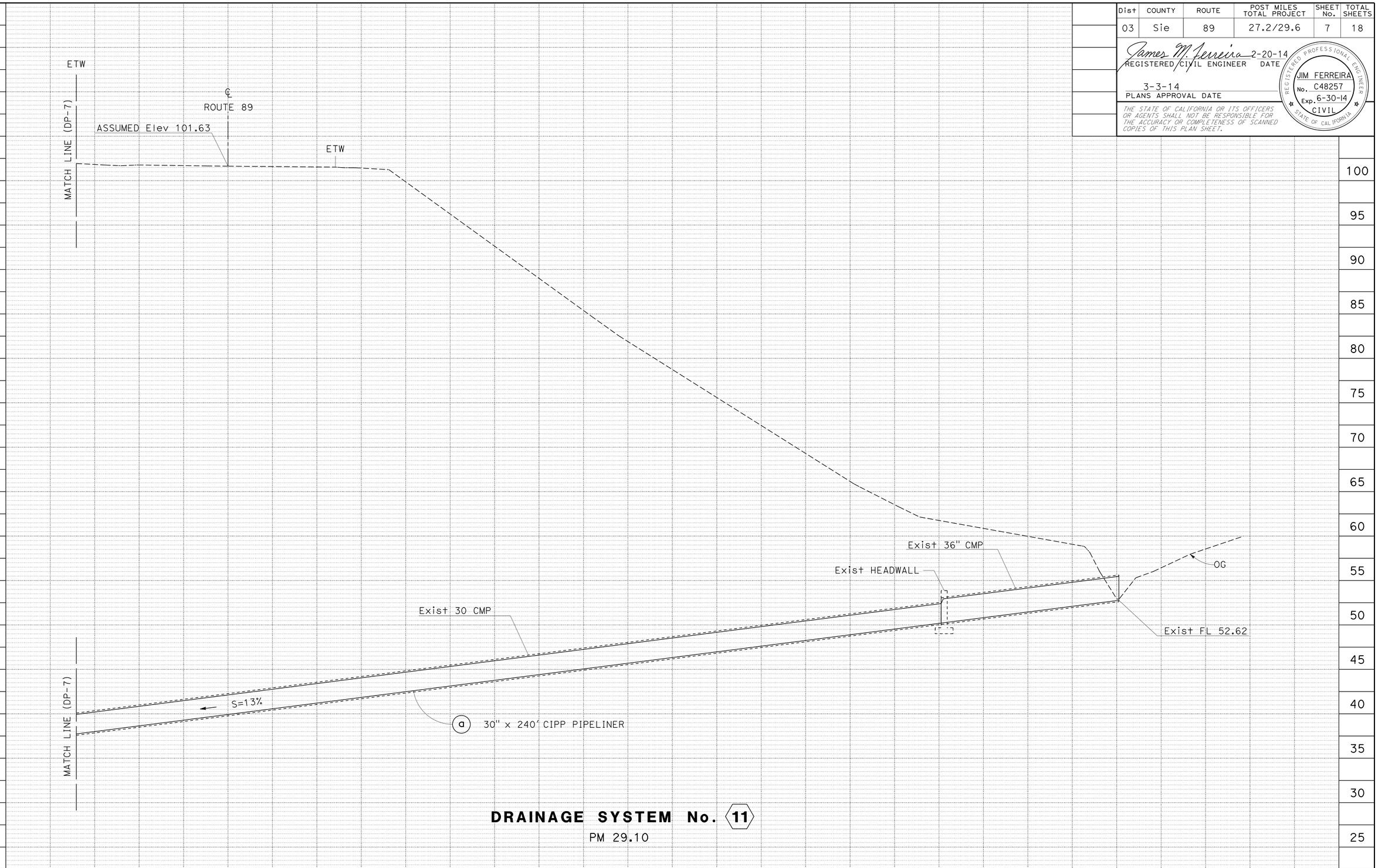

DRAINAGE SYSTEM No. 11

PM 29.10

DRAINAGE PROFILES

SCALE: Horiz 1" = 5'
Vert 1" = 5'

DP-6

REVISED BY | DATE REVISED

JIM FERREIRA | RONALD S. SYKES

CALCULATED-DESIGNED BY | CHECKED BY

FUNCTIONAL SUPERVISOR | RONALD S. SYKES

STATE OF CALIFORNIA - DEPARTMENT OF TRANSPORTATION

Caltrans® MAINTENANCE DESIGN

LAST REVISION 00-00-00 | DATE PLOTTED => 03-MAR-2014 | TIME PLOTTED => 10:00

Dist	COUNTY	ROUTE	POST MILES TOTAL PROJECT	SHEET No.	TOTAL SHEETS
03	Sie	89	27.2/29.6	8	18

James M. Ferreira 2-20-14
REGISTERED CIVIL ENGINEER DATE

3-3-14
PLANS APPROVAL DATE

REGISTERED PROFESSIONAL ENGINEER
JIM FERREIRA
No. C48257
Exp. 6-30-14
CIVIL
STATE OF CALIFORNIA

THE STATE OF CALIFORNIA OR ITS OFFICERS OR AGENTS SHALL NOT BE RESPONSIBLE FOR THE ACCURACY OR COMPLETENESS OF SCANNED COPIES OF THIS PLAN SHEET.

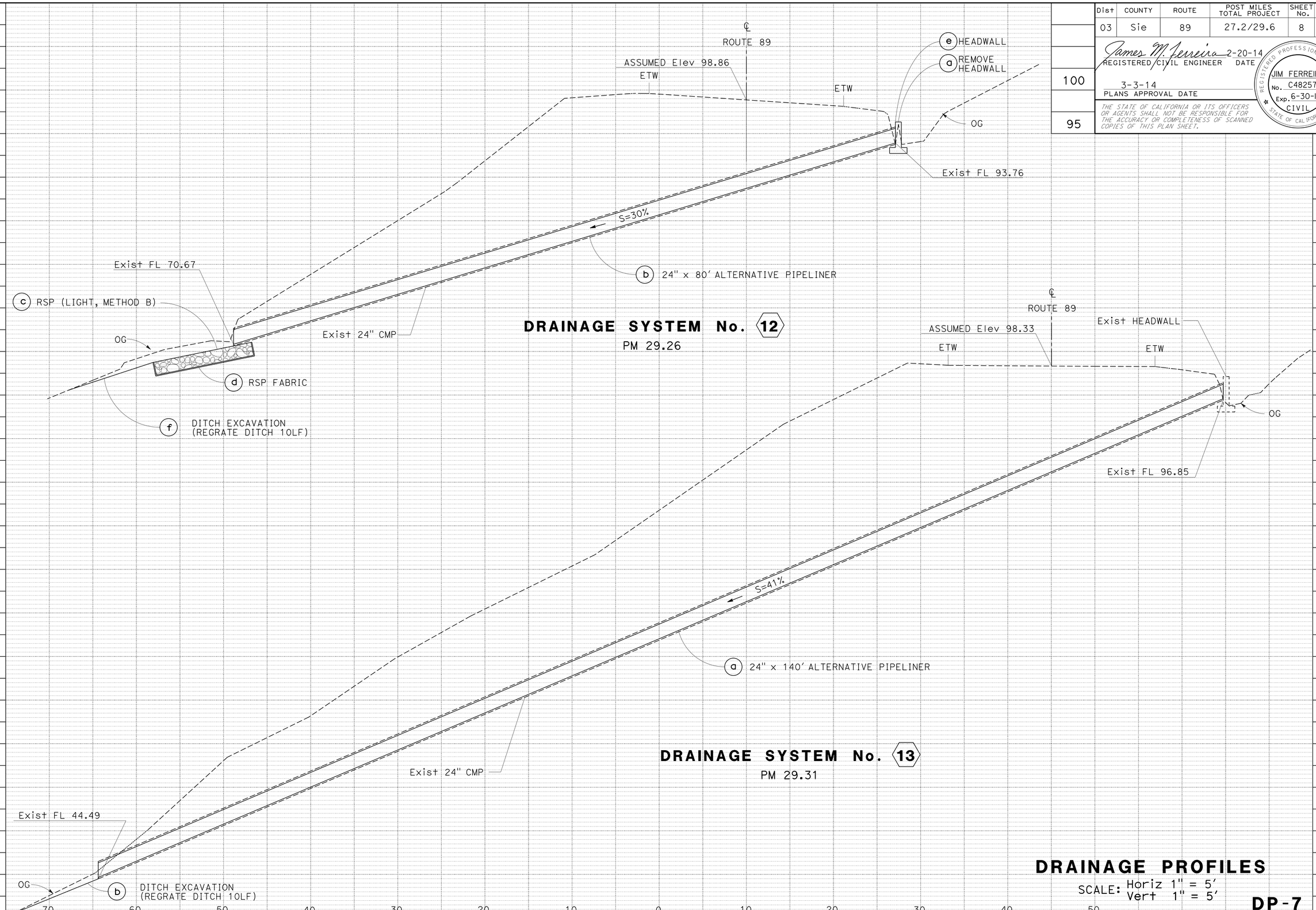

DRAINAGE PROFILES

SCALE: Horiz 1" = 5'
Vert 1" = 5'

DP-7

STATE OF CALIFORNIA - DEPARTMENT OF TRANSPORTATION
Caltrans® MAINTENANCE DESIGN

FUNCTIONAL SUPERVISOR: RONALD S. SYKES

CALCULATED-DESIGNED BY: JIM FERREIRA
CHECKED BY: RONALD S. SYKES

REVISED BY | DATE REVISED

LAST REVISION 00-00-00
DATE PLOTTED => 03-MAR-2014
TIME PLOTTED => 10:00

Dist	COUNTY	ROUTE	POST MILES TOTAL PROJECT	SHEET No.	TOTAL SHEETS
03	Sie	89	27.2/29.6	9	18

James M. Ferreira 2-20-14
REGISTERED CIVIL ENGINEER DATE

3-3-14
PLANS APPROVAL DATE

REGISTERED PROFESSIONAL ENGINEER
JIM FERREIRA
No. C48257
Exp. 6-30-14
CIVIL
STATE OF CALIFORNIA

THE STATE OF CALIFORNIA OR ITS OFFICERS OR AGENTS SHALL NOT BE RESPONSIBLE FOR THE ACCURACY OR COMPLETENESS OF SCANNED COPIES OF THIS PLAN SHEET.

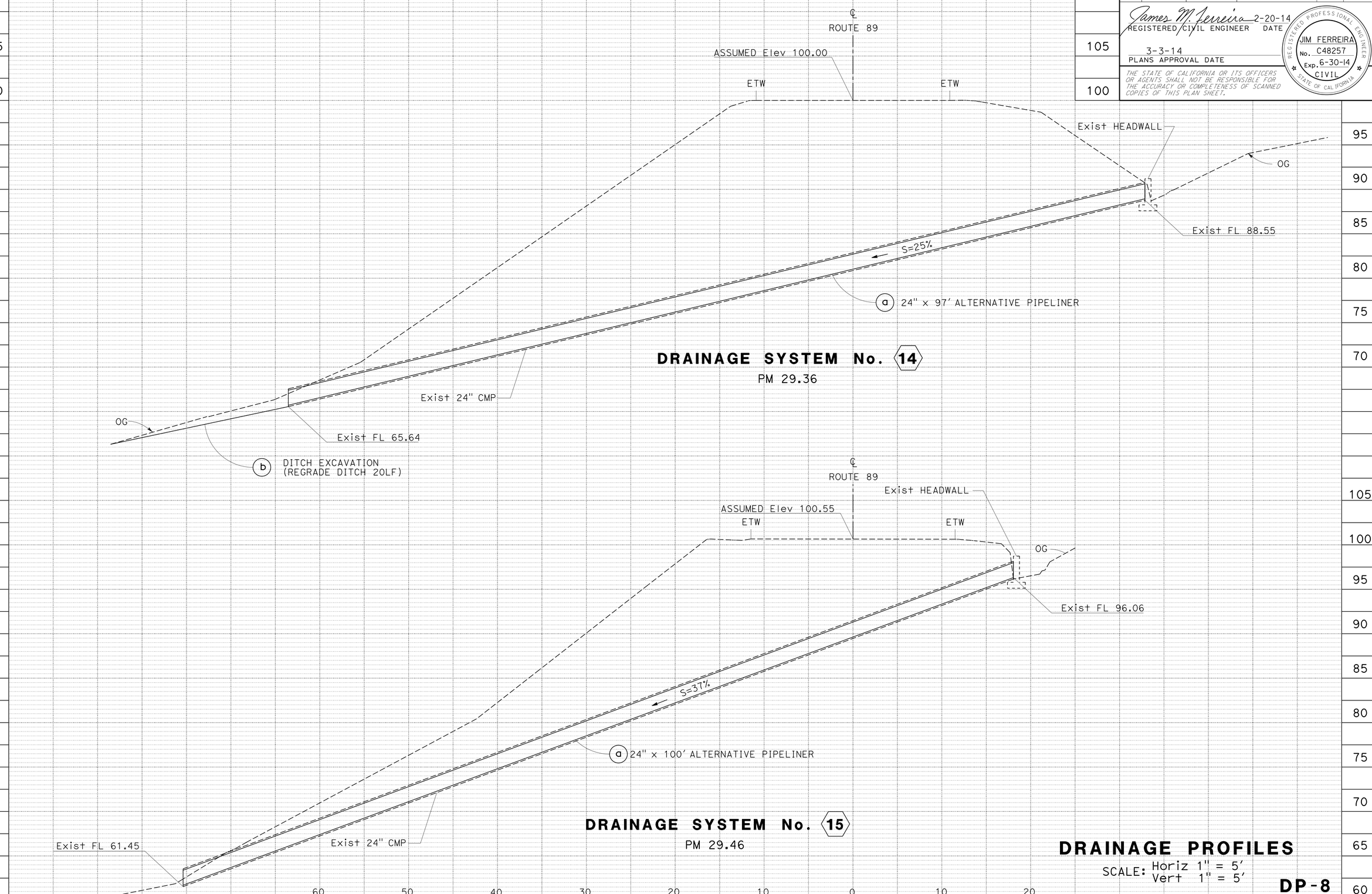

DRAINAGE SYSTEM No. 14
PM 29.36

DRAINAGE SYSTEM No. 15
PM 29.46

DRAINAGE PROFILES

SCALE: Horiz 1" = 5'
Vert 1" = 5'

DP-8

REVISED BY | DATE REVISED
JIM FERREIRA | RONALD S. SYKES
CALCULATED-DESIGNED BY | CHECKED BY
FUNCTIONAL SUPERVISOR | RONALD S. SYKES

STATE OF CALIFORNIA - DEPARTMENT OF TRANSPORTATION
Caltrans® MAINTENANCE DESIGN

LAST REVISION 00-00-00 | DATE PLOTTED => 03-MAR-2014 | TIME PLOTTED => 10:00

Dist	COUNTY	ROUTE	POST MILES TOTAL PROJECT	SHEET No.	TOTAL SHEETS
03	Sie	89	27.2/29.6	10	18

James M. Ferreira 2-20-14
REGISTERED CIVIL ENGINEER DATE

3-3-14
PLANS APPROVAL DATE

REGISTERED PROFESSIONAL ENGINEER
JIM FERREIRA
No. C48257
Exp. 6-30-14
CIVIL
STATE OF CALIFORNIA

THE STATE OF CALIFORNIA OR ITS OFFICERS OR AGENTS SHALL NOT BE RESPONSIBLE FOR THE ACCURACY OR COMPLETENESS OF SCANNED COPIES OF THIS PLAN SHEET.

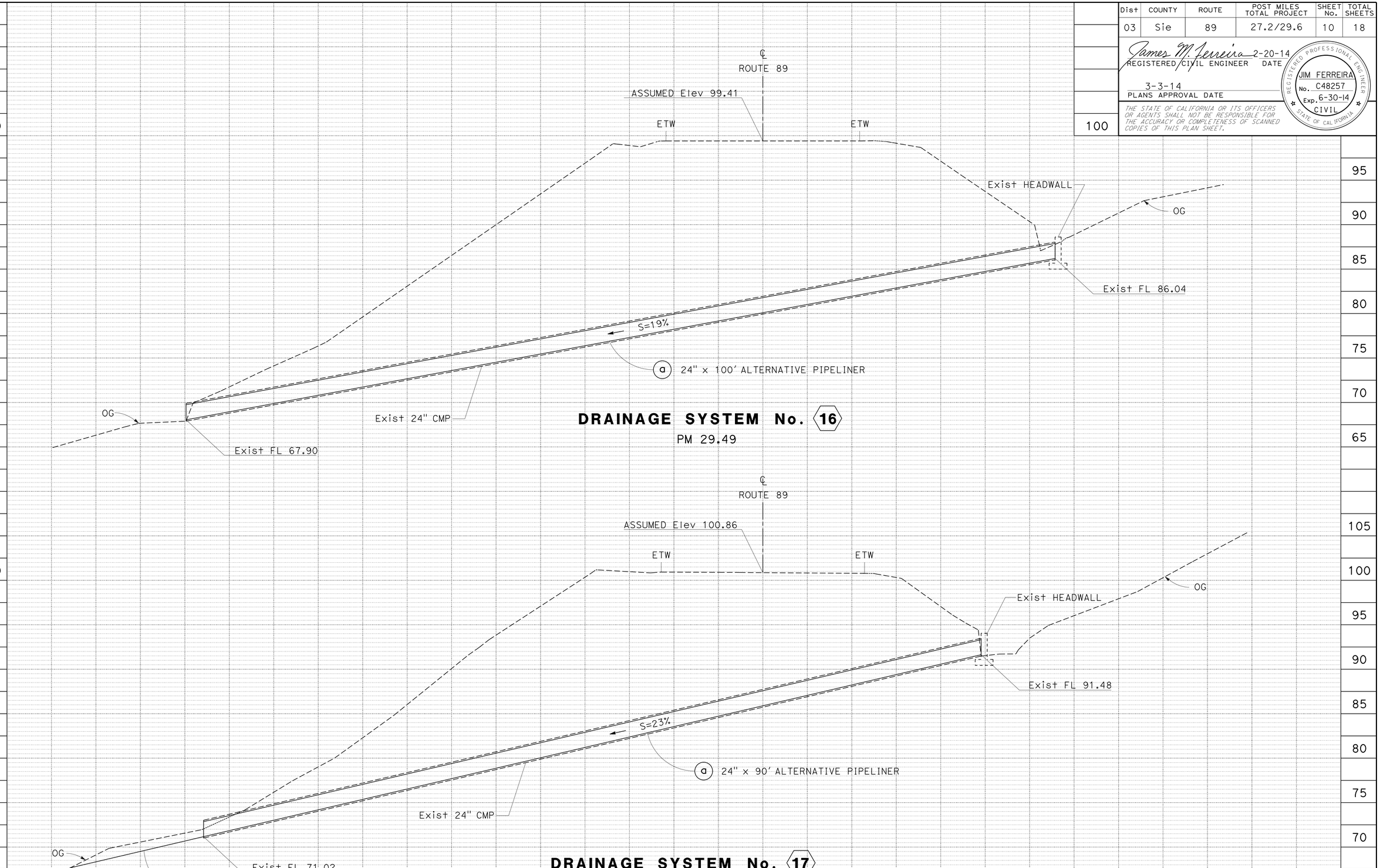

DRAINAGE PROFILES

SCALE: Horiz 1" = 5'
Vert 1" = 5'

DP-9

STATE OF CALIFORNIA - DEPARTMENT OF TRANSPORTATION
Caltrans MAINTENANCE DESIGN

FUNCTIONAL SUPERVISOR: RONALD S. SYKES
CALCULATED-DESIGNED BY: JIM FERREIRA
CHECKED BY: RONALD S. SYKES
REVISED BY
DATE REVISED

LAST REVISION 00-00-00
DATE PLOTTED => 03-MAR-2014
TIME PLOTTED => 10:00

Dist	COUNTY	ROUTE	POST MILES TOTAL PROJECT	SHEET No.	TOTAL SHEETS
03	Sie	89	27.2/29.6	11	18

REGISTERED CIVIL ENGINEER James M. Ferreira 2-20-14 DATE

PLANS APPROVAL DATE 3-3-14

REGISTERED PROFESSIONAL ENGINEER JIM FERREIRA No. 48257 Exp. 6-30-14 CIVIL STATE OF CALIFORNIA

THE STATE OF CALIFORNIA OR ITS OFFICERS OR AGENTS SHALL NOT BE RESPONSIBLE FOR THE ACCURACY OR COMPLETENESS OF SCANNED COPIES OF THIS PLAN SHEET.

LEGEND:

(N) - NOT A PAY ITEM

ROCK SLOPE PROTECTION

DRAINAGE SYSTEM No.	LOCATION PM	L FT	W FT	T FT	X FT
2	27.60	12.0	4.5	1.5	2.0
16	29.20	12.0	4.5	1.5	2.0
17	29.26	12.0	4.5	1.5	2.0

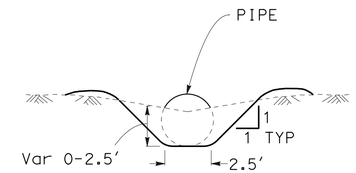

DITCH EXCAVATON (REGRADE DITCH)

REGRADE DITCH USING HAND TOOLS.
ALIGNMENT SHALL FOLLOW EXISTING DITCH FLOWLINE.
DEPOSIT EXCAVATED MATERIAL ALONGSIDE DITCH.
GRADE TO DRAIN.

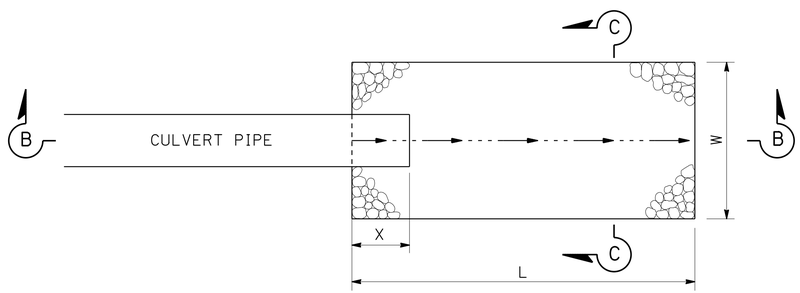

PLAN

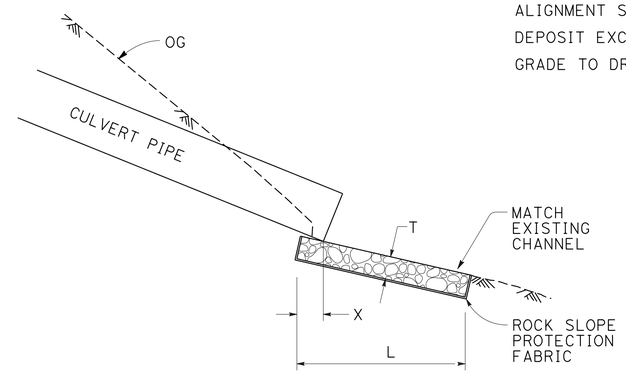

SECTION B-B

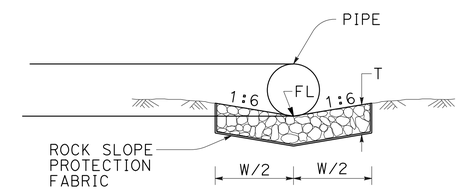

SECTION C-C

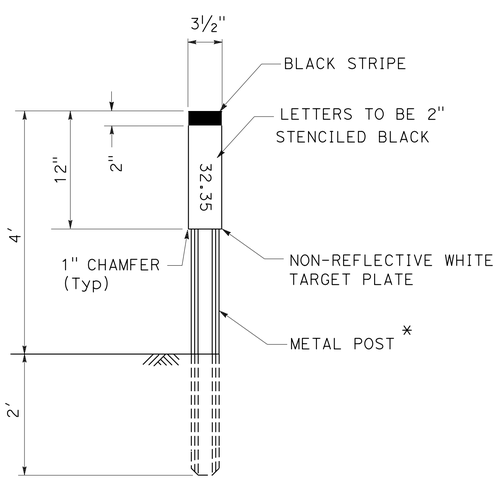

MARKER (CULVERT)

* SEE STD PLAN A73B FOR METAL POST DETAILS

PLACE MARKER (CULVERT) Min 2' AND Max 12' FROM EP

MARKER STENCIL DETAILS

DRAINAGE SYSTEM No.	LETTERING
1	27.40
2	27.60
3	27.65
4	27.72
5	27.77
6	28.15
7	28.26
8	28.34
9	28.42
10	28.50
11	28.58
12	28.68
13	28.92
14	29.09
15	29.10
16	29.20
17	29.26
18	29.31
19	29.36
20	29.42
21	29.46
22	29.49
23	29.54

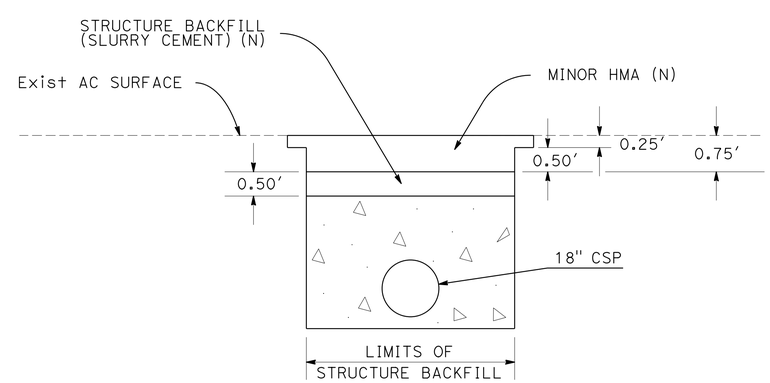

PM 27.72 TRENCH FOR REMOVE CULVERT/18"x50' CSP
SECTION VIEW

DRAINAGE DETAILS

NO SCALE

DD-1

STATE OF CALIFORNIA - DEPARTMENT OF TRANSPORTATION
Caltrans MAINTENANCE

FUNCTIONAL SUPERVISOR: RONALD S. SYKES
CALCULATED-DESIGNED BY: JIM FERREIRA
CHECKED BY: RONALD S. SYKES
REVISED BY
DATE REVISED

LAST REVISION 07-19-10
DATE PLOTTED => 03-MAR-2014
TIME PLOTTED => 10:00

Dist	COUNTY	ROUTE	POST MILES TOTAL PROJECT	SHEET No.	TOTAL SHEETS
03	Sie	89	27.2/29.6	12	18

James M. Ferreira 2-20-14
REGISTERED CIVIL ENGINEER DATE

3-3-14
PLANS APPROVAL DATE

REGISTERED PROFESSIONAL ENGINEER
JIM FERREIRA
No. C48257
Exp. 6-30-14
CIVIL
STATE OF CALIFORNIA

THE STATE OF CALIFORNIA OR ITS OFFICERS OR AGENTS SHALL NOT BE RESPONSIBLE FOR THE ACCURACY OR COMPLETENESS OF SCANNED COPIES OF THIS PLAN SHEET.

NOTES:

ABBREVIATIONS:
CIPP - CURED-IN-PLACE PIPELINER
WT - WATER TIGHT JOINT

DRAINAGE SYSTEM No. ⬡	DRAINAGE UNIT No. ◯	POST MILE	REMOVE MARKER	REMOVE CULVERT	REMOVE INLET	REMOVE HEADWALL	18" ALTERNATIVE PIPELINER	24" ALTERNATIVE PIPELINER	30" CURED-IN-PLACE PIPELINER	CLEANING, INSPECTING AND PREPARING CULVERT	REMOVE TREE	DITCH EXCAVATION	STRUCUTRE BACKFILL (SLURRY CEMENT)	STRUCTURAL CONCRETE, HEADWALL	MINOR CONCRETE MINOR STRUCTURE	REINFORCING STEEL	18" CORRUGATED STEEL PIPE (.109" THICK)	24" CORRUGATED STEEL PIPE (.109" THICK)	RSP (LIGHT, METHOD B)	RSP FABRIC (CLASS 8)	MARKER (CULVERT)	PIPE JOINT CLASSIFICATION	MISCELLANEOUS IRON AND STEEL	DESCRIPTION	DRAINAGE UNIT No. ◯	DRAINAGE SYSTEM No. ⬡
			EA	LF	EA	EA	LF	LF	LF	LF	EA	CY	CY	CY	CY	LB	LF	LF	CY	SQYD	EA		EA			
1	a	27.40		4																				REMOVE 18" CMP (OUTLET)	1	a
	b																6					WT		18" CSP (OUTLET)		b
	c		2				47			45											2			18" ALTERNATIVE PIPELINER		c
2	a	27.60	2				44			44											2			18" ALTERNATIVE PIPELINER	2	a
	b																		3					RSP (LIGHT, METHOD B)		b
	c																			11.5				RSP FABRIC		c
3	a	27.65		4																				REMOVE 18" CMP (OUTLET)	3	a
	b																6					WT		18" CSP (OUTLET)		b
	c		2				45			43											2			18" ALTERNATIVE PIPELINER		c
4	a	27.72		47																				REMOVE 18" CMP	4	a
	b				1																			REMOVE DRAINAGE INLET		b
	c		2										5				50				2	WT		18" CORRUGATED STEEL PIPE		c
	d														0.95									Mod G1 DI (H=3')		d
	d																						239	GRATE TYPE 24-12		d
5	a	28.26	2				41			41	1										2			18" ALTERNATIVE PIPELINER	5	a
	b											1.0												DITCH EXCAVATION (INLET)		b
6	a	28.42		4																				REMOVE 18" CMP (OUTLET)	6	a
	b																4					WT		18" CSP (OUTLET)		b
	c		2				47			47											2			18" ALTERNATIVE PIPELINER		c
7	a	28.50	2				56			56											2			18" ALTERNATIVE PIPELINER	7	a
	b											1.5												DITCH EXCAVATION (OUTLET)		b
	c											1.5												DITCH EXCAVATION (INLET)		c
8	a	28.68	2					142		142											2			24" ALTERNATIVE PIPELINER	8	a
9	a	28.92		4																				REMOVE 24" CMP (OUTLET)	9	a
	b																	4				WT		24" CSP (OUTLET)		b
	c		2					140		140											2			24" ALTERNATIVE PIPELINER		c
	d											0.5												DITCH EXCAVATION (OUTLET)		d
	e											0.5												DITCH EXCAVATION (INLET)		e
SUBTOTAL (DQ-1)			18	63	1	0	280	282	0	558	1	5.0	5	0	0.95	0	66	4	3	11.5	18		239			

(N) - NOT A SEPARATE PAY ITEM, FOR INFORMATION ONLY

ALLOWABLE ALTERNATIVE PIPELINER

DESCRIPTION	DEFORMED/RE-FORMED HDPE	PLASTIC PIPELINER	CIPP
18" APL	X		X
24" APL	X	X	X
30" APL			X

DRAINAGE QUANTITIES

DQ-1

STATE OF CALIFORNIA - DEPARTMENT OF TRANSPORTATION
Caltrans MAINTENANCE DESIGN

FUNCTIONAL SUPERVISOR: RONALD S. SYKES
CALCULATED-DESIGNED BY: JIM FERREIRA
CHECKED BY: RONALD S. SYKES
REVISED BY / DATE REVISED

LAST REVISION 00-00-00 | DATE PLOTTED => 03-MAR-2014 | TIME PLOTTED => 10:00

Dist	COUNTY	ROUTE	POST MILES TOTAL PROJECT	SHEET No.	TOTAL SHEETS
03	Sie	89	27.2/29.6	13	18

James M. Ferreira 2-20-14
REGISTERED CIVIL ENGINEER DATE

3-3-14
PLANS APPROVAL DATE

REGISTERED PROFESSIONAL ENGINEER
JIM FERREIRA
No. C48257
Exp. 6-30-14
CIVIL
STATE OF CALIFORNIA

THE STATE OF CALIFORNIA OR ITS OFFICERS OR AGENTS SHALL NOT BE RESPONSIBLE FOR THE ACCURACY OR COMPLETENESS OF SCANNED COPIES OF THIS PLAN SHEET.

NOTES:

ABBREVIATIONS:

CIPP - CURED-IN-PLACE PIPELINER
HDPE - HIGH DENSITY POLYETHYLENE

DRAINAGE SYSTEM No. ⬡	DRAINAGE UNIT No. ◯	POST MILE	REMOVE MARKER	REMOVE CULVERT	REMOVE INLET	REMOVE HEADWALL	18" ALTERNATIVE PIPELINER	24" ALTERNATIVE PIPELINER	30" CURED-IN-PLACE PIPELINER	CLEANING, INSPECTING, AND PREPARING CULVERT	REMOVE TREE	DITCH EXCAVATION	STRUCTURAL BACKFILL (SLURRY CEMENT)	STRUCTURAL CONCRETE HEADWALL	MINOR CONCRETE MINOR STRUCTURE	REINFORCING STEEL	18" CORRUGATED STEEL PIPE (.109" THICK)	24" CORRUGATED STEEL PIPE (.109" THICK)	RSP (LIGHT, METHOD B)	RSP FABRIC (CLASS 8)	MARKER (CULVERT)	PIPE JOINT CLASSIFICATION	MISCELLANEOUS IRON AND STEEL	DESCRIPTION	DRAINAGE UNIT No. ◯	DRAINAGE SYSTEM No. ⬡
			EA	LF	EA	EA	LF	LF	LF	LF	EA	LF	CY	CY	CY	LB	LF	LF	CY	SQYD	EA		LB			
10	a	29.09		4																				REMOVE 24" CMP (OUTLET)	10	a
	b																	4				WT		24" CSP (OUTLET)		b
	c		2					99		95											2			24" ALTERNATIVE PIPELINER		c
	d											1.5												DITCH EXCAVATION (OUTLET)		d
11	a	29.10	2						240	240											2			30" ALTERNATIVE PIPELINER	11	a
12	a	29.26				1																		REMOVE HEADWALL	12	a
	b		2					80		80											2			24" ALTERNATIVE PIPELINER		b
	c																		3					RSP (LIGHT, METHOD B)		c
	d																			11.5				RSP FABRIC		d
	e													1.51		100								HEADWALL		e
	f											1.0												DITCH EXCAVATION (OUTLET)		f
13	a	29.31	2					140		140											2			24" ALTERNATIVE PIPELINER	13	a
	b											1.0												DITCH EXCAVATION (OUTLET)		b
14	a	29.36	2					97		97											2			24" ALTERNATIVE PIPELINER	14	a
	b											0.5												DITCH EXCAVATION (OUTLET)		b
15	a	29.46	2					100		100											2			24" ALTERNATIVE PIPELINER	15	a
16	a	29.49	2					100		100											2			24" ALTERNATIVE PIPLINER	16	a
17	a	29.54	2					90		90											2			24" ALTERNATIVE PIPELINER	17	a
	b											1.0												DITCH EXCAVATION (OUTLET)		b
SUBTOTAL (DQ-2)			16	4	0	1	0	706	240	942	0	5.0	0	1.51	0	100	0	4	3	11.5	16		0			
SUBTOTAL (DQ-1)			18	63	1	0	280	282	0	558	1	5.0	5	0	0.95	0	66	4	3	11.5	18		239			
TOTAL			34	67	1	1	280	988	240	1500	1	10.0	5	1.51	0.95	100	66	8	6	23.0	34		239			

(N) - NOT A SEPARATE PAY ITEM, FOR INFORMATION ONLY

ALLOWABLE ALTERNATIVE PIPELINER

DESCRIPTION	DEFORMED/RE-FORMED HDPE	PLASTIC PIPELINER	CIPP
18" APL	X		X
24" APL	X	X	X
30" APL			X

DRAINAGE QUANTITIES

DQ-2

STATE OF CALIFORNIA - DEPARTMENT OF TRANSPORTATION
Caltrans® MAINTENANCE DESIGN

JIM FERREIRA — CALCULATED-DESIGNED BY
RONALD S. SYKES — CHECKED BY
RONALD S. SYKES — FUNCTIONAL SUPERVISOR
REVISED BY — DATE REVISED

LAST REVISION 00-00-00 | DATE PLOTTED => 03-MAR-2014 | TIME PLOTTED => 10:00

M

Maint	MAINTENANCE
Max	MAXIMUM
MB	METAL BEAM
MBB	METAL BEAM BARRIER
MBGR	METAL BEAM GUARD RAILING
Med	MEDIAN
MGS	MIDWEST GUARDRAIL SYSTEM
MH	MANHOLE
Min	MINIMUM
Misc	MISCELLANEOUS
Misc I & S	MISCELLANEOUS IRON AND STEEL
Mkr	MARKER
Mod	MODIFIED, MODIFY
Mon	MONUMENT
MP	METAL PLATE
MPGR	METAL PLATE GUARD RAILING
MR	MOVEMENT RATING
MSE	MECHANICALLY STABILIZED EMBANKMENT
Mt	MOUNTAIN, MOUNT
Mtl	MATERIAL
MVP	MAINTENANCE VEHICLE PULLOUT

N

N	NORTH
NB	NORTHBOUND
No.	NUMBER (MUST HAVE PERIOD)
Nos.	NUMBERS (MUST HAVE PERIOD)
NPS	NOMINAL PIPE SIZE
NS	NEAR SIDE
NSP	NEW STANDARD PLAN
NTS	NOT TO SCALE

O

Oblr	OBLITERATE
OC	OVERCROSSING
OD	OUTSIDE DIAMETER
OF	OUTSIDE FACE
OG	ORIGINAL GROUND
OGAC	OPEN GRADED ASPHALT CONCRETE
OGFC	OPEN GRADED FRICTION COURSE
OH	OVERHEAD
OHWM	ORDINARY HIGH WATER MARK
O-O	OUT TO OUT
Opp	OPPOSITE
OSD	OVERSIDE DRAIN

P

p	PAGE
PAP	PERFORATED ALUMINUM PIPE
PB	PULL BOX
PC	POINT OF CURVATURE, PRECAST
PCC	POINT OF COMPOUND CURVE, PORTLAND CEMENT CONCRETE
PCMS	PORTABLE CHANGEABLE MESSAGE SIGN
PCP	PERFORATED CONCRETE PIPE, PRESTRESSED CONCRETE PIPE
PCVC	POINT OF COMPOUND VERTICAL CURVE
PEC	PERMIT TO ENTER AND CONSTRUCT
Ped	PEDESTRIAN
Ped OC	PEDESTRIAN OVERCROSSING
Ped UC	PEDESTRIAN UNDERCROSSING
Perm Mtl	PERMEABLE MATERIAL

P continued

PG	PROFILE GRADE
PI	POINT OF INTERSECTION
PJP	PARTIAL JOINT PENETRATION
Pkwy	PARKWAY
ℙ,PL	PLATE
P/L	PROPERTY LINE
PM	POST MILE, TIME FROM NOON TO MIDNIGHT
PN	PAVING NOTCH
POC	POINT OF HORIZONTAL CURVE
POT	POINT OF TANGENT
POVC	POINT OF VERTICAL CURVE
PP	PIPE PILE, PLASTIC PIPE, POWER POLE
PPL	PREFORMED PERMEABLE LINER
PPP	PERFORATED PLASTIC PIPE
PRC	POINT OF REVERSE CURVE
PRF	PAVEMENT REINFORCING FABRIC
PRVC	POINT OF REVERSE VERTICAL CURVE
PS&E	PLANS, SPECIFICATIONS AND ESTIMATES
PS, P/S	PRESTRESSED
PSP	PERFORATED STEEL PIPE
PT	POINT OF TANGENCY
PVC	POLYVINYL CHLORIDE
Pvmt	PAVEMENT

Q

Qty	QUANTITY

R

R	RADIUS
R & D	REMOVE AND DISPOSE
R & S	REMOVE AND SALVAGE
R/C	RATE OF CHANGE
RCA	REINFORCED CONCRETE ARCH
RCB	REINFORCED CONCRETE BOX
RCP	REINFORCED CONCRETE PIPE
RCPA	REINFORCED CONCRETE PIPE ARCH
Rd	ROAD
Reinf	REINFORCED, REINFORCEMENT, REINFORCING
Rel	RELOCATE
Repl	REPLACEMENT
Ret	RETAINING
Rev	REVISED, REVISION
Rdwy	ROADWAY
RHMA	RUBBERIZED HOT MIX ASPHALT
Riv	RIVER
RM	ROAD-MIXED
RP	RADIUS POINT, REFERENCE POINT
RR	RAILROAD
RSP	ROCK SLOPE PROTECTION, REVISED STANDARD PLAN
Rt	RIGHT
Rte	ROUTE
RW	REDWOOD, RETAINING WALL
R/W	RIGHT OF WAY
Rwy	RAILWAY

S

S	SOUTH, SUPPLEMENT
SAE	STRUCTURE APPROACH EMBANKMENT
Salv	SALVAGE
SAPP	STRUCTURAL ALUMINUM PLATE PIPE
SB	SOUTHBOUND
SC	SAND CUSHION
SCSP	SLOTTED CORRUGATED STEEL PIPE
SD	STORM DRAIN
Sec	SECOND, SECTION
Sep	SEPARATION
SG	SUBGRADE
Shld	SHOULDER
Sht	SHEET
Sim	SIMILAR
℄	STATION LINE
SM	SELECTED MATERIAL
Spec	SPECIAL, SPECIFICATIONS
SPP	SLOTTED PLASTIC PIPE
SS	SLOPE STAKE
SSBM	STRAP AND SADDLE BRACKET METHOD
SSD	STRUCTURAL SECTION DRAIN
SSPA	STRUCTURAL STEEL PLATE ARCH
SSPP	STRUCTURAL STEEL PLATE PIPE
SSPPA	STRUCTURAL STEEL PLATE PIPE ARCH
SSRP	STEEL SPIRAL RIB PIPE
St	STREET
Sta	STATION
STBB	SINGLE THRIE BEAM BARRIER
Std	STANDARD
Str	STRUCTURE
Surf	SURFACING
SW	SIDEWALK, SOUND WALL
Swr	SEWER
Sym	SYMMETRICAL
S4S	SURFACE 4 SIDES

T

T	SEMI-TANGENT
Tan	TANGENT
TBB	THRIE BEAM BARRIER
Tbr	TIMBER
TC	TOP OF CURB
TCB	TRAFFIC CONTROL BOX
TCE	TEMPORARY CONSTRUCTION EASEMENT
Tel	TELEPHONE
Temp	TEMPORARY
TG	TOP OF GRADE
Tot	TOTAL
TP	TELEPHONE POLE
TPB	TREATED PERMEABLE BASE
TPM	TREATED PERMEABLE MATERIAL
Trans	TRANSITION

T continued

TS	TRANSVERSE, TRAFFIC SIGNAL, TUBULAR STEEL
Typ	TYPICAL

U

UC	UNDERCROSSING
UD	UNDERDRAIN
UG	UNDERGROUND
UON	UNLESS OTHERWISE NOTED
UP	UNDERPASS

V

V	VALVE, DESIGN SPEED
Var	VARIABLE, VARIES
VC	VERTICAL CURVE
VCP	VITRIFIED CLAY PIPE
Vert	VERTICAL
Via	VIADUCT
Vol	VOLUME

W

W	WEST, WIDTH
WB	WESTBOUND
WH	WEEP HOLE
WM	WIRE MESH
WS	WATER SURFACE
WSP	WELDED STEEL PIPE
Wt	WEIGHT
WV	WATER VALVE
WW	WINGWALL
WWLOL	WINGWALL LAYOUT LINE

X

X Sec	CROSS SECTION
Xing	CROSSING

Y

Yr	YEAR
Yrs	YEARS

Dist	COUNTY	ROUTE	POST MILES TOTAL PROJECT	SHEET No.	TOTAL SHEETS
03	Sie	89	27.2/29.6	14	18

Grace M. Tsushima
REGISTERED CIVIL ENGINEER

July 19, 2013
PLANS APPROVAL DATE

REGISTERED PROFESSIONAL ENGINEER Grace M. Tsushima No. C49814 Exp. 9-30-14 CIVIL STATE OF CALIFORNIA

THE STATE OF CALIFORNIA OR ITS OFFICERS OR AGENTS SHALL NOT BE RESPONSIBLE FOR THE ACCURACY OR COMPLETENESS OF SCANNED COPIES OF THIS PLAN SHEET.

TO ACCOMPANY PLANS DATED 3-3-14

UNIT OF MEASUREMENT SYMBOLS:

Some of the symbols used in the project plan quantity tables and in the Bid Item List are:

TABLE A

SYMBOL USED	DEFINITIONS
ACRE	ACRE
CF	CUBIC FOOT
CY	CUBIC YARD
EA	EACH
GAL	GALLON
LB	POUND
LF	LINEAR FOOT
SQFT	SQUARE FOOT
SQYD	SQUARE YARD
STA	100 FEET
TAB	TABLET
TON	2,000 POUNDS

Some of the symbols used in the plans other than in the project plan quantity tables are:

TABLE B

SYMBOL USED	DEFINITIONS
ksi	KIPS PER SQUARE INCH
ksf	KIPS PER SQUARE FOOT
psi	POUNDS PER SQUARE INCH
psf	POUNDS PER SQUARE FOOT
lb/ft^3, pcf	POUNDS PER CUBIC FOOT
tsf	TONS PER SQUARE FOOT
mph, MPH *	MILES PER HOUR
ø	NOMINAL DIAMETER
oz	OUNCE
lb	POUND
kip	1,000 POUNDS
cal	CALORIE
ft	FOOT OR FEET
gal	GALLON

* For use on a sign panel only

STATE OF CALIFORNIA
DEPARTMENT OF TRANSPORTATION

ABBREVIATIONS (SHEET 2 OF 2)

NO SCALE

RSP A10B DATED JULY 19, 2013 SUPERSEDES STANDARD PLAN A10B DATED MAY 20, 2011 - PAGE 2 OF THE STANDARD PLANS BOOK DATED 2010.

REVISED STANDARD PLAN RSP A10B

2010 REVISED STANDARD PLAN RSP A10B

6-7-13

TO ACCOMPANY PLANS DATED 3-3-14

Dist	COUNTY	ROUTE	POST MILES TOTAL PROJECT	SHEET No.	TOTAL SHEETS
03	Sie	89	27.2/29.6	15	18

Glenn DeCou
REGISTERED CIVIL ENGINEER

October 19, 2012
PLANS APPROVAL DATE

REGISTERED PROFESSIONAL ENGINEER Glenn DeCou No. C34547 Exp. 9-30-13 CIVIL STATE OF CALIFORNIA

THE STATE OF CALIFORNIA OR ITS OFFICERS OR AGENTS SHALL NOT BE RESPONSIBLE FOR THE ACCURACY OR COMPLETENESS OF SCANNED COPIES OF THIS PLAN SHEET.

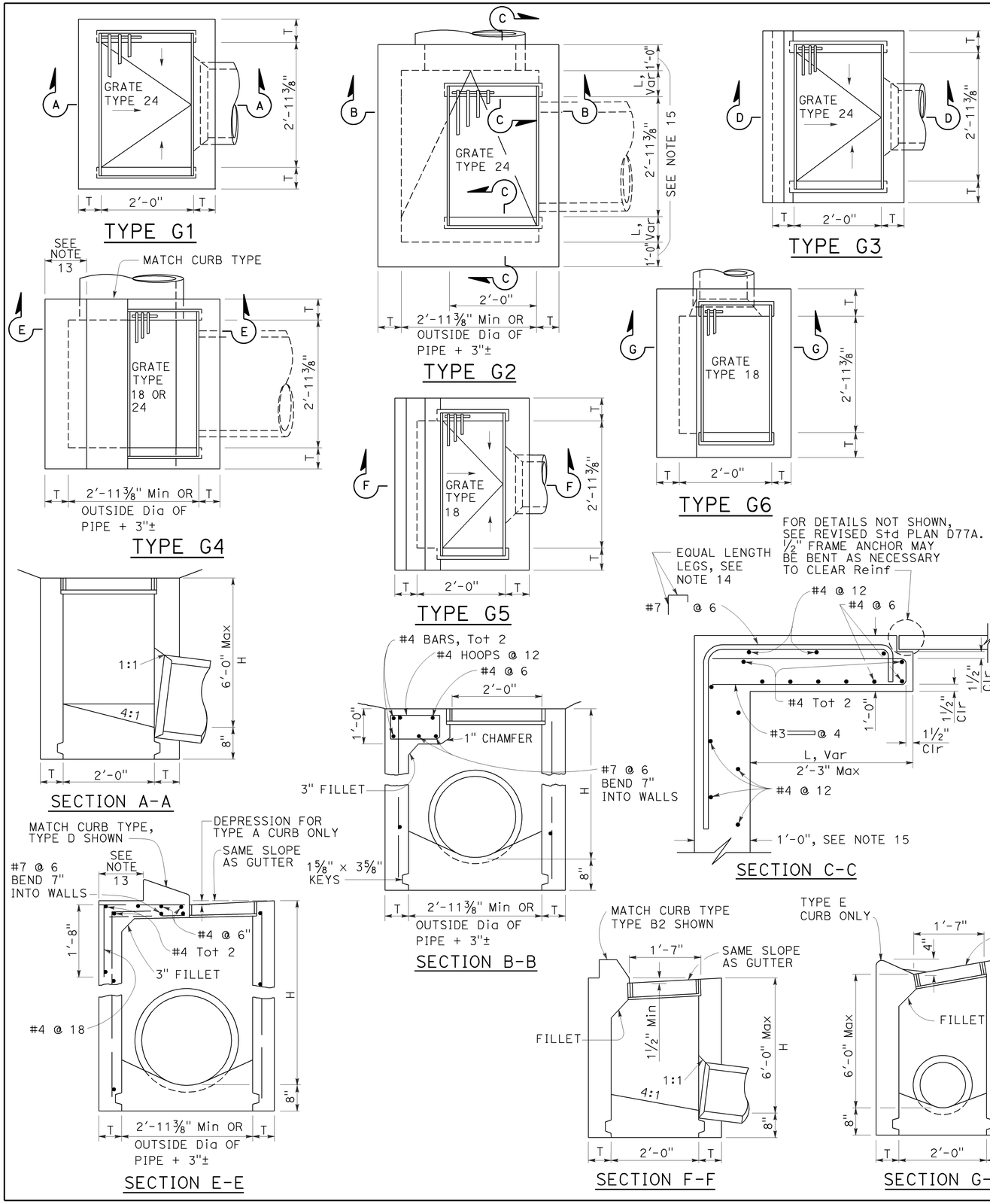

NOTES:

1. "H" is the difference in elevation between the outlet pipe flow line and the normal gutter grade line undepressed.
2. For "T" wall thickness, see Table A below.
3. Wall reinforcing not required when "H" is 8'-0" or less and the unsupported width or length is 7'-0" or less. Walls exceeding these limits shall be reinforced with #4 bars @ 1'-6" ± centers placed 1½" clear to inside of box unless otherwise shown.
4. Inlet bottom reinforcing not required. See Standard Plan D74C for alternative reinforced bottom and alternative half round bottom.
5. Steps-None required where "H" is less than 2'-6". Where "H" is 2'-6" or more, install steps with lowest rung 1'-0" above the floor and highest rung not more than 6" below top of inlet. The distance between steps shall not exceed 1'-0" and shall be uniform throughout the length of the wall. Place steps in the wall without an opening. Steps inserts may be substituted for the bar steps. Step inserts shall comply with State Industrial Safety requirements. See Standard Plan D74C for step details.
6. Details shown apply to both metal and concrete pipe.
7. Pipe(s) can be placed in any wall.
8. Curb section shall match adjacent curb.
9. Basin floors shall have wood trowel finish and a minimum slope of 12:3 from all directions toward outlet pipe.
10. Set inlet so that grate bars are parallel to direction of principal surface flow.
11. See Revised Standard Plans D77A and D77B for grate and frame details and weights of miscellaneous iron and steel.
12. See Standard Plan D78A for gutter depression details.
13. This dimenison will vary with different grates, curbs types, box width and wall thickness.
14. Bar may be rotated as necessary to clear opening. Where "L" is 6" or less, bar may be omitted.
15. Where "L" is 6" or less, wall thickness shall be as shown in Table A.
16. Cast-in-place inlets to be formed around all pipes/stubs intersecting the inlet, and concrete poured in one continuous operation. Precast inlets shall have mortared connections conforming to details for Type GCP Inlet shown on Standard Plan D75B. See Standard Specifications for mortar composition.

TABLE A

CONCRETE QUANTITIES				
TYPE	H=3'-0" TO 8'-0" (T=6")		H=8'-1" TO 20'-0" (T=8")	
	H=3'-0" (CY)	ADDITIONAL PCC PER FOOT (CY)	H=8'-1" (CY)	ADDITIONAL PCC PER FOOT (CY)
G-1	0.95	0.220	See Note A	SEE NOTE A
G-2*	1.31	0.255	3.50	0.357
G-3	1.03	0.220	See Note A	SEE NOTE A
G-4* (TYPE 24)	1.27	0.255	3.48	0.357
G-4* (TYPE 18)	1.30	0.255	3.50	0.357
G-5	1.02	0.220	SEE NOTE A	SEE NOTE A
G-6	1.04	0.220	SEE NOTE A	SEE NOTE A

TABLE BASED ON 8" FLOOR SLAB. NO DEDUCTIONS ARE TO BE MADE TO THESE QUANTITIES BECAUSE OF PIPE OPENINGS, DIFFERENT FLOOR ALTERNATIVES OR DIFFERENT CURB TYPES. * QUANTITIES FOR TYPE G-2 AND G-4 INLETS BASED ON THE MINIMUM INTERIOR DIMENSIONS.

NOTE A:

Maximum allowable height 6'-0".

STATE OF CALIFORNIA
DEPARTMENT OF TRANSPORTATION

DRAINAGE INLETS

NO SCALE

RSP D73 DATED OCTOBER 19, 2012 SUPERSEDES STANDARD PLAN D73 DATED MAY 20, 2011 - PAGE 156 OF THE STANDARD PLANS BOOK DATED 2010.

REVISED STANDARD PLAN RSP D73

2010 REVISED STANDARD PLAN RSP D73

7-19-12

Dist	COUNTY	ROUTE	POST MILES TOTAL PROJECT	SHEET No.	TOTAL SHEETS
03	Sie	89	27.2/29.6	16	18

Raymond Don Tsztoo
REGISTERED CIVIL ENGINEER

April 19, 2013
PLANS APPROVAL DATE

REGISTERED PROFESSIONAL ENGINEER Raymond Don Tsztoo No. C37332 Exp. 6-30-14 CIVIL STATE OF CALIFORNIA

THE STATE OF CALIFORNIA OR ITS OFFICERS OR AGENTS SHALL NOT BE RESPONSIBLE FOR THE ACCURACY OR COMPLETENESS OF SCANNED COPIES OF THIS PLAN SHEET.

TO ACCOMPANY PLANS DATED 3-3-14

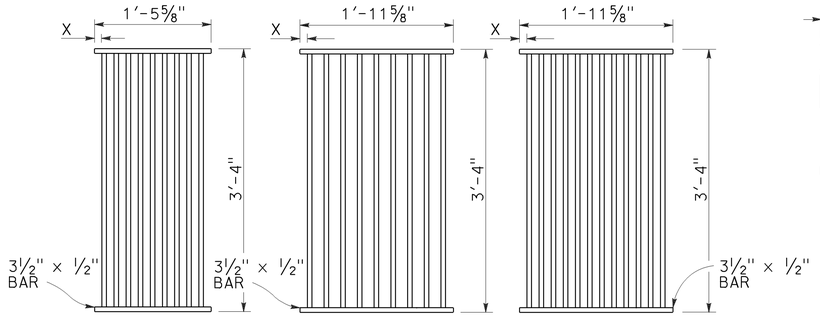

TYPE 18-9

1⅜" Clear spacing. Use within the roadbed on highways where bicycles and pedestrians are excluded.

TYPE 24-9

2" Clear spacing. Use in locations off the roadbed on all types of highways.

TYPE 24-12

1⅜" Clear spacing. Use within the roadbed on highways where bicycles and pedestrians are excluded.

RECTANGULAR GRATE DETAILS

(See table below)

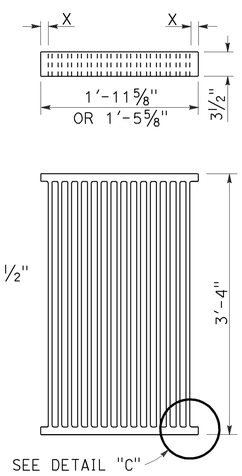

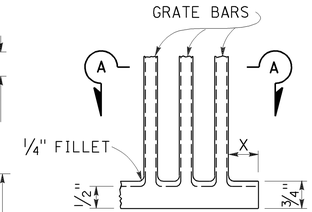

DETAIL "C"

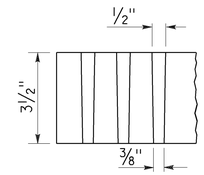

SECTION A-A

ALTERNATIVE CAST DUCTILE IRON GRATE OR CAST CARBON STEEL GRATE

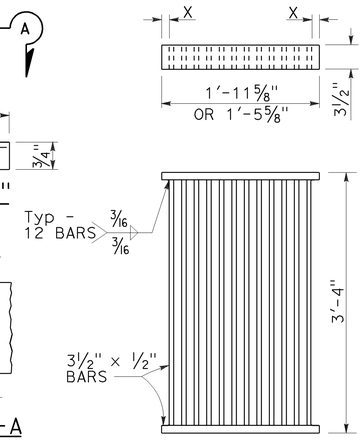

ALTERNATIVE WELDED GRATE

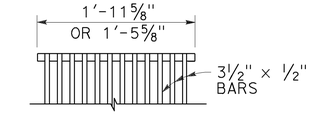

CAST END BLOCK

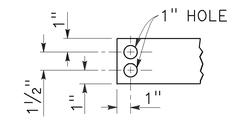

END OF BAR

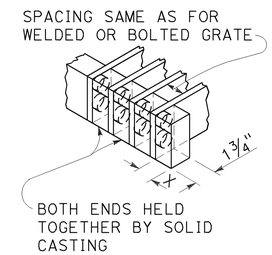

ALTERNATIVE CAST DUCTILE IRON OR CAST CARBON STEEL END BLOCK GRATE

NOTES:

1. Grate type numbers refer to approximate width of grate in inches and number of bars, respectively.
2. Contractor has the option of using cast ductile iron, cast carbon steel, welded, bolted, or cast end block grate.
3. Rounded top of bars optional on all grates.
4. Pipe inlets with a grate shall be placed so that bars parallel direction of principle surface flow.
5. Complete joint penetration butt welds may be substituted for the fillet welds on all anchors.
6. Standard square, hexagon, round or equivalent headed anchors may be substituted for the right angle hooks on the anchors shown on this plan.
7. Grate and frame weights are based on welded grates (weights of face angles, steps, protection bars, etc. are not included).
8. Connect chain to grate and frame only at locations shown on the plans. When chain is required, do not use cast ductile iron grates.

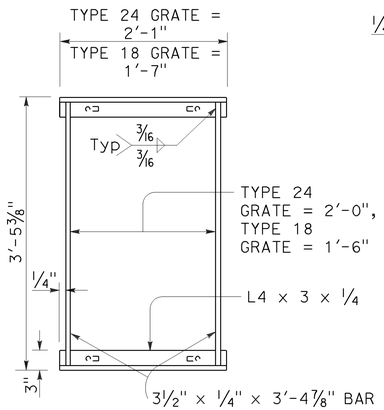

TYPICAL FRAME

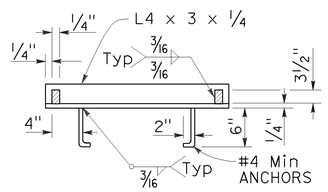

CROSS SECTION

(Thru frame)

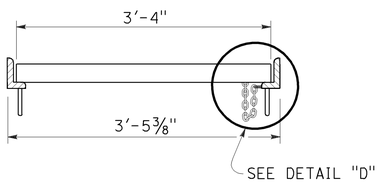

LONGITUDINAL SECTION

(Thru frame and grate)

RECTANGULAR FRAME DETAILS

(For all rectangular grates)

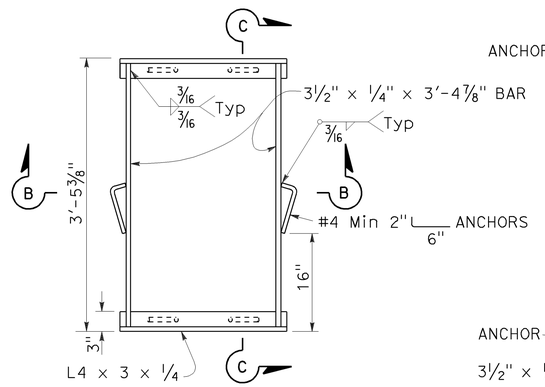

TYPICAL FRAME

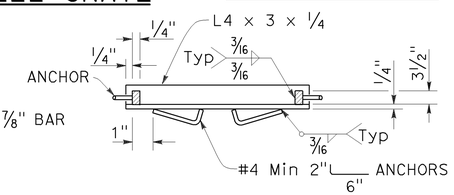

SECTION B-B

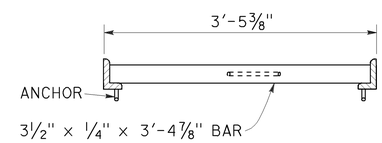

SECTION C-C

ALTERNATIVE ANCHOR FOR RECTANGULAR FRAME

(For details not shown, See Rectangular Frame Details)

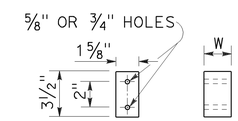

BAR SPACER

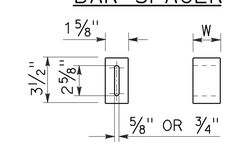

ALTERNATIVE SPACER

W = 1⅜" or 2"

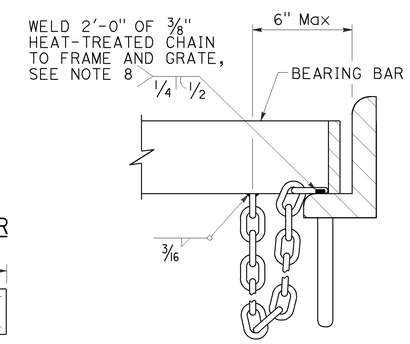

DETAIL "D"

(Steel grates only)

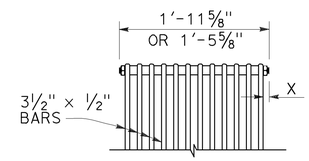

BOLTED END BLOCK

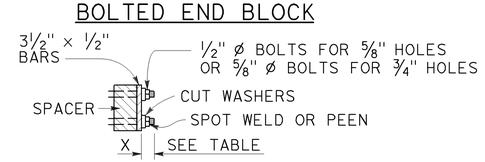

BOLTING DETAIL

ALTERNATIVE BOLTED GRATE

GRATE BAR SPACING TABLE

TYPE	No. OF BARS	CLEAR BAR SPACING	X
18-9	9	1⅜"	1 1/16"
24-9	9	2"	1 9/16"
24-12	12	1⅜"	1¼"

INLET TYPE	COVER TYPE	WEIGHT LB
OS	PLATE	174
OL-7	PLATE	170
OL-10	PLATE	170
OL-14	PLATE	170
OL-21	PLATE	170
OCP	PLATE	112
OCPI	PLATE	112
OCPI	REDWOOD	42
OMP	PLATE	177
OMPI	PLATE	177

INLET TYPE	GRATE TYPE	No. OF GRATES	WEIGHT LB
GDO	24-12	2	634
GOL-7	24-12	1	326
GOL-10	24-12	1	326
GO,G1,G2,G3,G4 (TYPE 24)	24-9	1	263
	24-12	1	326
G4 (TYPE 18),G5,G6	18-9	1	249
GT1	18-9	2	498
GT2	18-9	2	498
GT3	24-12	2	652
GT4	24-12	2	652
TRASH RACK			22
GRATE CHAIN			3

BASIS FOR Misc IRON & STEEL FINAL PAY WEIGHTS FOR DRAINAGE INLETS

(See Note 7)

STATE OF CALIFORNIA
DEPARTMENT OF TRANSPORTATION

GRATE DETAILS No. 1

NO SCALE

RSP D77A DATED APRIL 19, 2013 SUPERSEDES RSP D77A DATED JULY 20, 2012 AND STANDARD PLAN D77A DATED MAY 20, 2011 - PAGE 164 OF THE STANDARD PLANS BOOK DATED 2010.

REVISED STANDARD PLAN RSP D77A

2010 REVISED STANDARD PLAN RSP D77A

4-4-13

Dist	COUNTY	ROUTE	POST MILES TOTAL PROJECT	SHEET No.	TOTAL SHEETS
03	Sie	89	27.2/29.6	17	18

REGISTERED CIVIL ENGINEER

July 19, 2013
PLANS APPROVAL DATE

REGISTERED PROFESSIONAL ENGINEER
Gurinderpal Bhullar
No. C48815
Exp. 9-30-14
CIVIL
STATE OF CALIFORNIA

THE STATE OF CALIFORNIA OR ITS OFFICERS OR AGENTS SHALL NOT BE RESPONSIBLE FOR THE ACCURACY OR COMPLETENESS OF SCANNED COPIES OF THIS PLAN SHEET.

TO ACCOMPANY PLANS DATED 3-3-14

2010 REVISED STANDARD PLAN RSP T9

TABLE 1

TAPER LENGTH CRITERIA AND CHANNELIZING DEVICE SPACING

SPEED (S)	MINIMUM TAPER LENGTH * FOR WIDTH OF OFFSET 12 FEET (W)				MAXIMUM CHANNELIZING DEVICE SPACING		
					X	Y	Z **
	TANGENT 2L	MERGING L	SHIFTING L/2	SHOULDER L/3	TAPER	TANGENT	CONFLICT
mph	ft	ft	ft	ft	ft	ft	ft
20	160	80	40	27	20	40	10
25	250	125	63	42	25	50	12
30	360	180	90	60	30	60	15
35	490	245	123	82	35	70	17
40	640	320	160	107	40	80	20
45	1080	540	270	180	45	90	22
50	1200	600	300	200	50	100	25
55	1320	660	330	220	55	110	27
60	1440	720	360	240	60	120	30
65	1560	780	390	260	65	130	32
70	1680	840	420	280	70	140	35

* - For other offsets, use the following merging taper length formula for L:
For speed of 40 mph or less, $L = WS^2/60$
For speed of 45 mph or more, $L = WS$

Where: L = Taper length in feet
W = Width of offset in feet
S = Posted speed limit, off-peak 85th-percentile speed prior to work starting, or the anticipated operating speed in mph

** - Use for taper and tangent sections where there are no pavement markings or where there is a conflict between existing pavement markings and channelizers (CA).

TABLE 2

LONGITUDINAL BUFFER SPACE AND FLAGGER STATION SPACING

SPEED *	Min D **	DOWNGRADE Min D ***		
		-3%	-6%	-9%
mph	ft	ft	ft	ft
20	115	116	120	126
25	155	158	165	173
30	200	205	215	227
35	250	257	271	287
40	305	315	333	354
45	360	378	400	427
50	425	446	474	507
55	495	520	553	593
60	570	598	638	686
65	645	682	728	785
70	730	771	825	891

* - Speed is posted speed limit, off-peak 85th-percentile speed prior to work starting, or the anticipated operating speed in mph

** - Longitudinal buffer space or flagger station spacing

*** - Use on sustained downgrade steeper than -3 percent and longer than 1 mile.

TABLE 3

ADVANCE WARNING SIGN SPACING

ROAD TYPE	DISTANCE BETWEEN SIGNS *		
	A	B	C
	ft	ft	ft
URBAN - 25 mph OR LESS	100	100	100
URBAN - MORE THAN 25 mph TO 40 mph	250	250	250
URBAN - MORE THAN 40 mph	350	350	350
RURAL	500	500	500
EXPRESSWAY / FREEWAY	1000	1500	2640

* - The distances are approximate, are intended for guidance purposes only, and should be applied with engineering judgment. These distances should be adjusted by the Engineer for field conditions, if necessary, by increasing or decreasing the recommmended distances.

STATE OF CALIFORNIA
DEPARTMENT OF TRANSPORTATION

TRAFFIC CONTROL SYSTEM TABLES FOR LANE AND RAMP CLOSURES

NO SCALE

RSP T9 DATED JULY 19, 2013 SUPERSEDES RSP T9 DATED APRIL 19, 2013 THAT SUPPLEMENTS THE STANDARD PLANS BOOK DATED 2010.

REVISED STANDARD PLAN RSP T9

Dist	COUNTY	ROUTE	POST MILES TOTAL PROJECT	SHEET No.	TOTAL SHEETS
03	Sie	89	27.2/29.6	18	18

REGISTERED CIVIL ENGINEER

April 19, 2013
PLANS APPROVAL DATE

REGISTERED PROFESSIONAL ENGINEER Gurinderpal Bhullar No. C48815 Exp. 9-30-14 CIVIL STATE OF CALIFORNIA

THE STATE OF CALIFORNIA OR ITS OFFICERS OR AGENTS SHALL NOT BE RESPONSIBLE FOR THE ACCURACY OR COMPLETENESS OF SCANNED COPIES OF THIS PLAN SHEET.

TO ACCOMPANY PLANS DATED 3-3-14

2010 REVISED STANDARD PLAN RSP T13

NOTES:

See Revised Standard Plan RSP T9 for tables.

Use cone spacing X for taper segment, Y for tangent segment or Z for conflict situations, as approriate, per Table 1, unless X, Y, or Z cone spacing is shown on this sheet.

Unless otherwise specified in the special provisions, all temporary warning signs shall have black legend on fluorescent orange background.

California codes are designated by (CA). Otherwise, Federal (MUTCD) codes are shown.

TYPICAL LANE CLOSURE WITH REVERSIBLE CONTROL

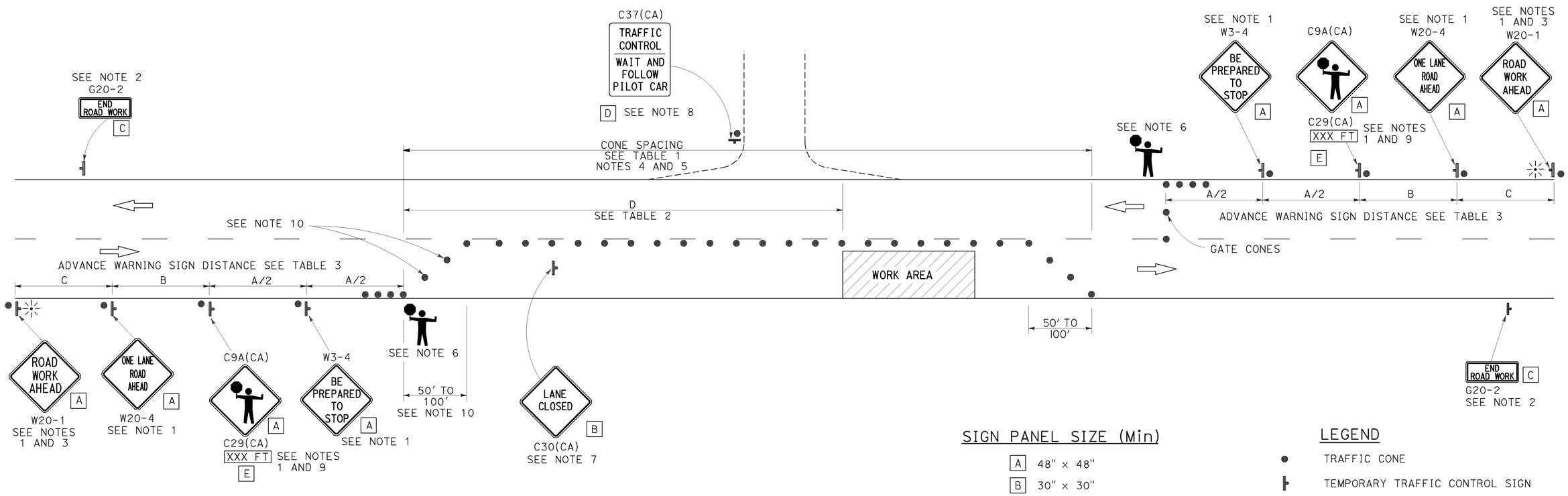

SIGN PANEL SIZE (Min)

A	48" × 48"
B	30" × 30"
C	36" × 18"
D	36" × 42"
E	20" × 7"

LEGEND

- TRAFFIC CONE
- TEMPORARY TRAFFIC CONTROL SIGN
- PORTABLE FLASHING BEACON
- FLAGGER

NOTES:

1. Each advance warning sign in each direction of travel shall be equipped with at least two flags for daytime closure. Each flag shall be at least 16" x 16" in size and shall be orange or fluorescent red-orange in color. Flashing beacons shall be placed at the locations indicated for lane closure during hours of darkness.
2. A G20-2 "END ROAD WORK" sign, as appropriate, shall be placed at the end of the lane control unless the end of work area is obvious, or ends within a larger project's limits.
3. If the W20-1 sign would follow within 2000' of a stationary W20-1 or G20-1 "ROAD WORK NEXT _____ MILES", use a W20-4 sign for the first advance warning sign.
4. All cones used for lane closures during the hours of darkness shall be fitted with retroreflective bands (or sleeves) as specified in the specifications.
5. Portable delineators, placed at one-half the spacing indicated for traffic cones, may be used instead of cones for daytime closures only.
6. Additional advance flaggers may be required. Flagger should stand in a conspicuous place, be visible to approaching traffic as well as approaching vehicles after the first vehicle has stopped. During the hours of darkness, the flagging-station and flagger shall be illuminated and clearly visible to approaching traffic. The illumination footprint of the lighting on the ground shall be at least 20' in diameter. Place a minimum of four cones at 50' intervals in advance of flagger station as shown.
7. Place C30(CA) "LANE CLOSED" sign at 500' to 1000' intervals throughout extended work areas. They are optional if the work area is visible from the flagger station.
8. When a pilot car is used, place a C37(CA) "TRAFFIC CONTROL-WAIT AND FOLLOW PILOT CAR" sign with black legend on white background at all intersections, driveways and alleys without a flagger within traffic control area. Signs shall be clean and visible at all times. Where traffic can not be effectively self-regulated, at least one flagger shall be used at each intersection within traffic control area.
9. An optional C29(CA) sign may be placed below the C9A(CA) sign.
10. Either traffic cones or barricades shall be placed on the taper. Barricades shall be Type I, II, or III.

STATE OF CALIFORNIA
DEPARTMENT OF TRANSPORTATION

TRAFFIC CONTROL SYSTEM FOR LANE CLOSURE ON TWO LANE CONVENTIONAL HIGHWAYS

NO SCALE

RSP T13 DATED APRIL 19, 2013 SUPERSEDES STANDARD PLAN T13 DATED MAY 20, 2011 - PAGE 241 OF THE STANDARD PLANS BOOK DATED 2010.

REVISED STANDARD PLAN RSP T13