ACSTP-P191(005)E

Dist	COUNTY	ROUTE	POST MILES TOTAL PROJECT	SHEET No.	TOTAL SHEETS
03	But	191	0.2/11.4	1	26

STATE OF CALIFORNIA

DEPARTMENT OF TRANSPORTATION

PROJECT PLANS FOR CONSTRUCTION ON

STATE HIGHWAY

IN BUTTE COUNTY
IN AND NEAR PARADISE
FROM 0.2 MILE NORTH OF ROUTE 70 TO PEARSON ROAD

TO BE SUPPLEMENTED BY STANDARD PLANS DATED 2010

INDEX OF PLANS

SHEET No.	DESCRIPTION
1	TITLE AND LOCATION MAP
2-7	CONSTRUCTION DETAILS
8-9	CONSTRUCTION AREA SIGNS
10	PAVEMENT DELINEATION QUANTITIES
11	SUMMARY OF QUANTITIES
12-15	ELECTRICAL PLANS
16-18	TRAFFIC CONTROL SYSTEMS
19-26	REVISED STANDARD PLANS

THE STANDARD PLANS LIST APPLICABLE TO THIS CONTRACT IS INCLUDED IN THE NOTICE TO BIDDERS AND SPECIAL PROVISIONS BOOK.

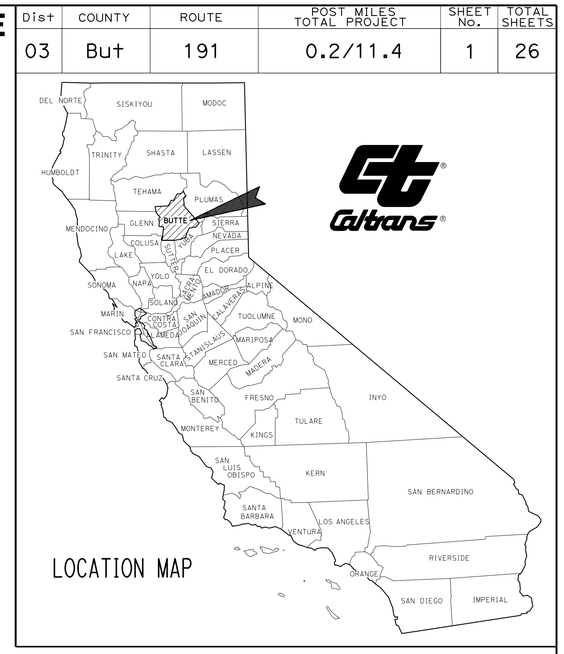

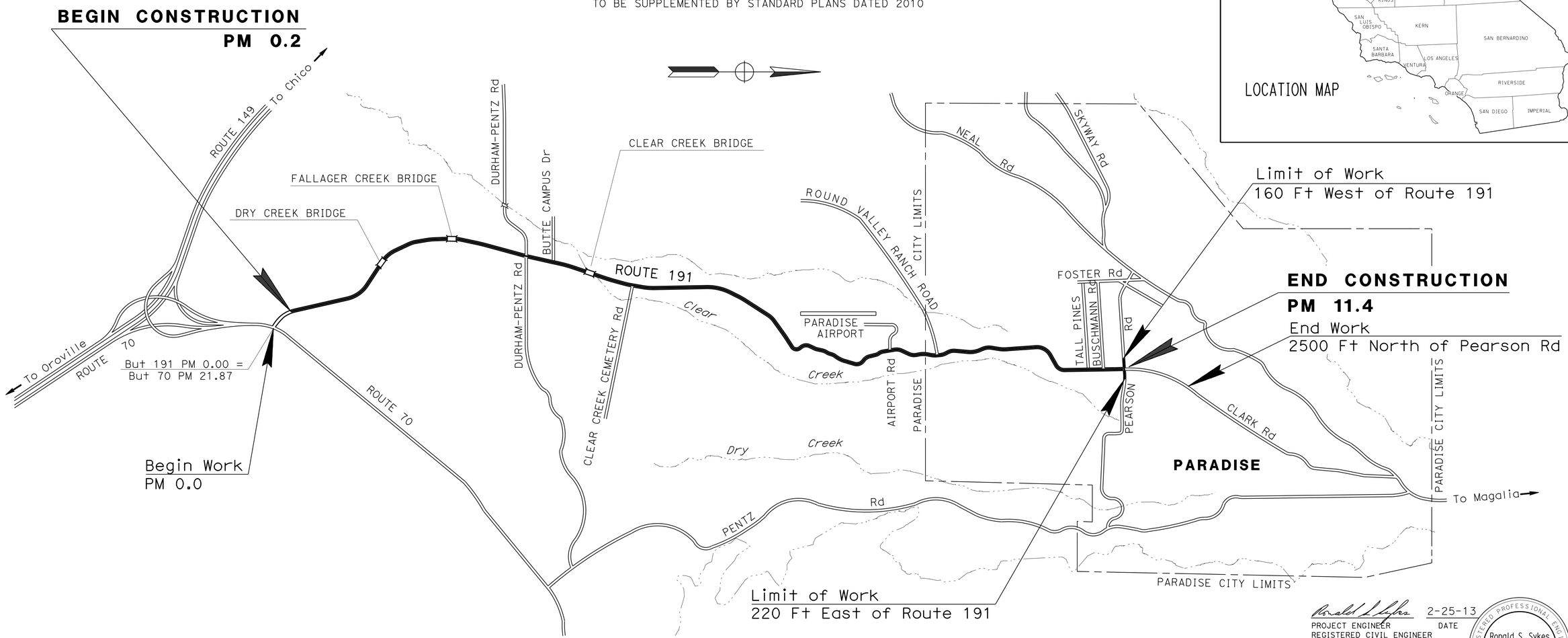

NO SCALE

THE CONTRACTOR SHALL POSSESS THE CLASS (OR CLASSES) OF LICENSE AS SPECIFIED IN THE "NOTICE TO BIDDERS."

PROJECT MANAGER: RONALD S. SYKES

DESIGN ENGINEER: RONALD S. SYKES

Ronald S. Sykes 2-25-13
PROJECT ENGINEER DATE
REGISTERED CIVIL ENGINEER

February 25, 2013
PLANS APPROVAL DATE

REGISTERED PROFESSIONAL ENGINEER
Ronald S. Sykes
No. C35526
Exp. 9-30-13
CIVIL
STATE OF CALIFORNIA

THE STATE OF CALIFORNIA OR ITS OFFICERS OR AGENTS SHALL NOT BE RESPONSIBLE FOR THE ACCURACY OR COMPLETENESS OF SCANNED COPIES OF THIS PLAN SHEET.

CONTRACT No.	03-4M2704
PROJECT ID	0300020517

LAST REVISION 11-01-12 DATE PLOTTED => 19-MAR-2013 TIME PLOTTED => 08:21

Dist	COUNTY	ROUTE	POST MILES TOTAL PROJECT	SHEET No.	TOTAL SHEETS
03	But	191	0.2/11.4	2	26

REGISTERED CIVIL ENGINEER 2-25-13 DATE

2-25-13
PLANS APPROVAL DATE

REGISTERED PROFESSIONAL ENGINEER RONALD S. SYKES No. C35526 Exp. 9-30-13 CIVIL STATE OF CALIFORNIA

THE STATE OF CALIFORNIA OR ITS OFFICERS OR AGENTS SHALL NOT BE RESPONSIBLE FOR THE ACCURACY OR COMPLETENESS OF SCANNED COPIES OF THIS PLAN SHEET.

NOTES:

1. DIMENSIONS OF THE PAVEMENT STRUCTURES (STRUCTURAL SECTIONS) ARE SUBJECT TO TOLERANCES SPECIFIED IN THE STANDARD SPECIFICATIONS.
2. SUPERELEVATION AS SHOWN OR AS DIRECTED BY THE ENGINEER.
3. IN AREAS WHERE THE WIDTH OF THE EXISTING SURFACING VARIES FROM THAT SHOWN ON THE PLANS, THE CONTRACTOR SHALL VARY THE WIDTH OF SURFACING OPERATION, AS DIRECTED BY THE ENGINEER.
4. FOR LOCATIONS OF MBGR, AND HMA DIKE SEE SHEET Q-1.
5. EXISTING UTILITY FACILITIES HAVE NOT BEEN PLOTTED ON THESE PLANS.
6. FOR LOCATIONS OF REPLACE AC SURFACING AND COLD PLANE AC Pvmt, SEE CONSTRUCTION DETAILS SHEETS AND SUMMARY OF QUANTITIES SHEET.
7. FOR PAVEMENT CONFORMS TO EXISTING SEE CONSTRUCTION DETAIL SHEETS.

ABBREVIATION:

RHMA-G - RUBBERIZED HOT MIX ASPHALT (GAP GRADED)

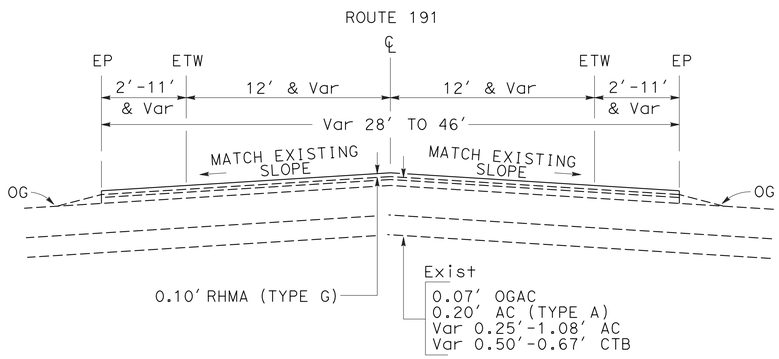

PM 9.07 TO PM 9.10
PM 4.02 TO PM 7.04
PM 7.22 TO PM 7.45
PM 8.65 TO PM 8.69

PM 9.07 TO PM 9.10
PM 9.19 TO PM 9.88
PM 10.17 TO PM 11.28

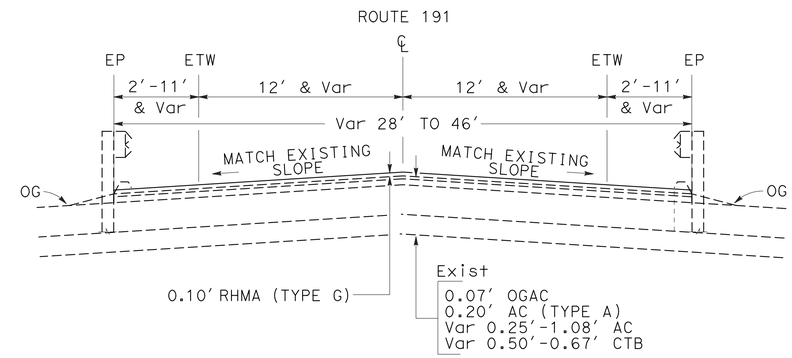

PM 7.04 TO PM 7.22 LT
PM 7.16 TO PM 7.22 RT
PM 8.69 TO PM 9.07 RT
PM 9.10 TO PM 9.19 RT

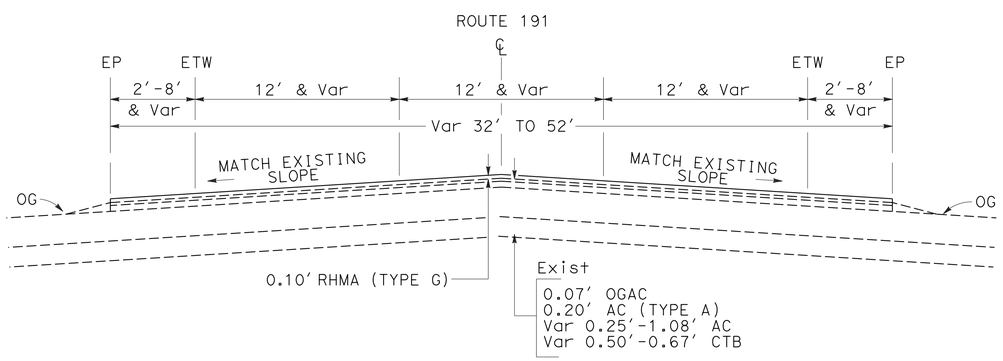

PM 3.80 TO PM 4.02
PM 9.88 TO PM 10.17

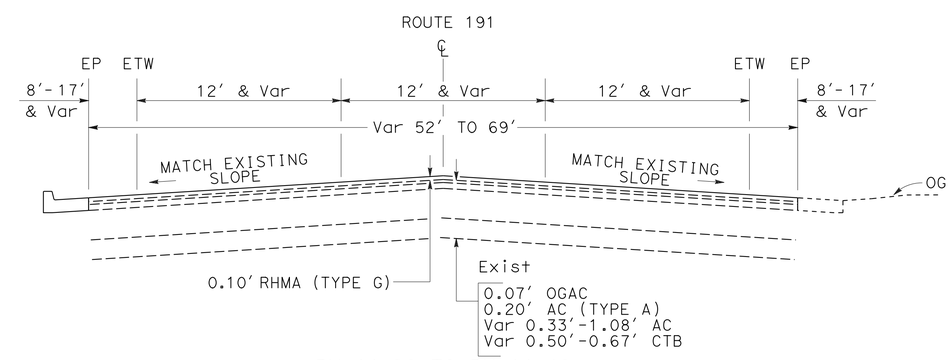

PM 11.28 TO PM 11.40
SEE NOTE 6

ROUTE 191

CONSTRUCTION DETAILS

NO SCALE

C-1

STATE OF CALIFORNIA - DEPARTMENT OF TRANSPORTATION
Caltrans® MAINTENANCE DESIGN

FUNCTIONAL SUPERVISOR: RONALD S. SYKES
CALCULATED-DESIGNED BY: JIM FERREIRA
CHECKED BY: RONALD S. SYKES
REVISED BY
DATE REVISED

LAST REVISION 07-19-12
DATE PLOTTED => 19-MAR-2013
TIME PLOTTED => 08:21

Dist	COUNTY	ROUTE	POST MILES TOTAL PROJECT	SHEET No.	TOTAL SHEETS
03	But	191	0.2/11.4	3	26

REGISTERED CIVIL ENGINEER 2-25-13 DATE

2-25-13
PLANS APPROVAL DATE

REGISTERED PROFESSIONAL ENGINEER RONALD S. SYKES No. C35526 Exp. 9-30-13 CIVIL STATE OF CALIFORNIA

THE STATE OF CALIFORNIA OR ITS OFFICERS OR AGENTS SHALL NOT BE RESPONSIBLE FOR THE ACCURACY OR COMPLETENESS OF SCANNED COPIES OF THIS PLAN SHEET.

NOTES:

1. EXISTING UTILITY FACILITIES HAVE NOT BEEN PLOTTED ON THESE PLANS.
2. FOR COMPLETE RIGHT OF WAY AND ACCURATE ACCESS DATA, SEE RIGHT OF WAY RECORD MAPS AT DISTRICT OFFICE.
3. SEE SHEET Q-1 FOR ADJUST UTILITY COVER TO GRADE LOCATIONS.

LEGEND:

- COLD PLANE ASPHALT CONCRETE PAVEMENT
- RHMA TYPE-G
- SAND

ABBREVIATIONS:

RHMA-G - RUBBERIZED HOT MIX ASPHALT (GAP GRADED)

REBAR - REINFORCEMENT BAR

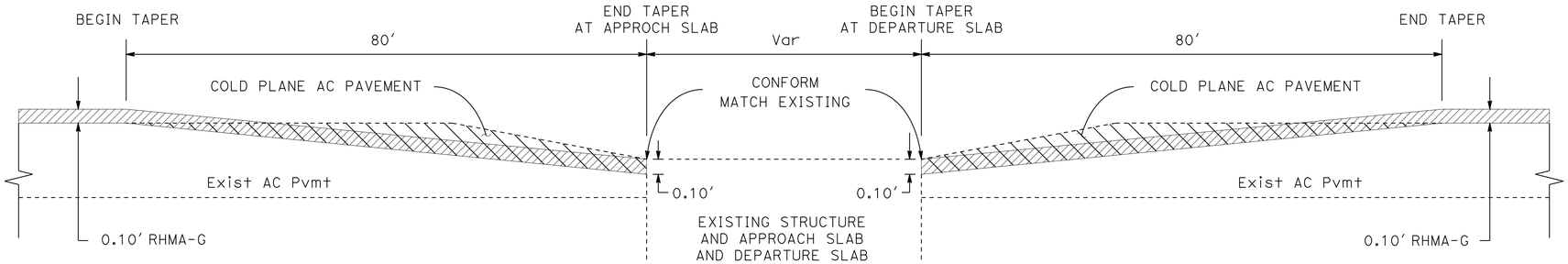

PAVING CONFORM AT BRIDGE STRUCTURES

DRY CREEK BRIDGE	PM 1.68
FALLAGER CREEK BRIDGE	PM 2.61
CLEAR CREEK BRIDGE	PM 4.67

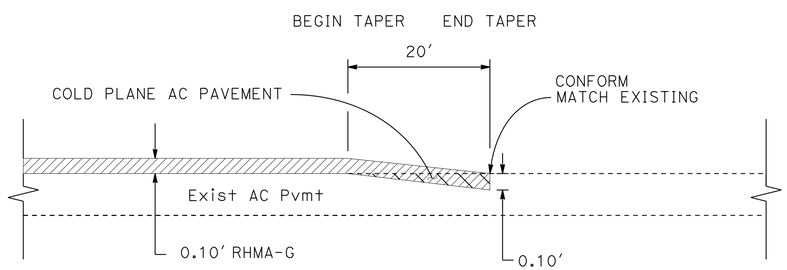

MAINLINE PAVING CONFORM

PM 0.20
PM 7.45
PM 8.65

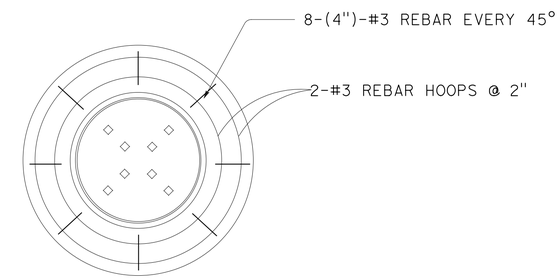

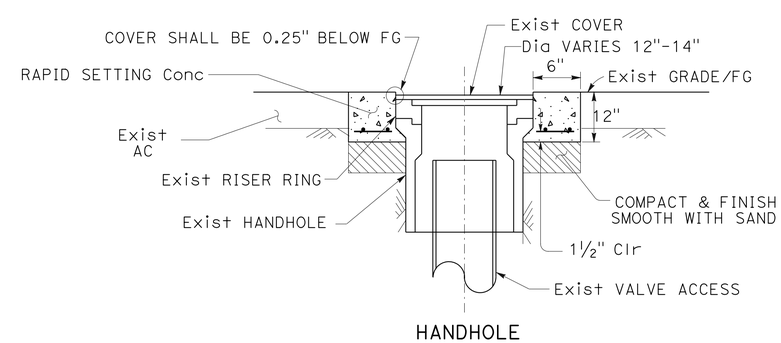

ADJUST UTILITY COVER TO GRADE

SEE NOTE 3

CONSTRUCTION DETAILS

NO SCALE

C-2

STATE OF CALIFORNIA - DEPARTMENT OF TRANSPORTATION
Caltrans® MAINTENANCE DESIGN

FUNCTIONAL SUPERVISOR: RONALD S. SYKES
CALCULATED-DESIGNED BY: JIM FERREIRA
CHECKED BY: RONALD S. SYKES
REVISED BY
DATE REVISED

LAST REVISION 07-19-12
DATE PLOTTED => 19-MAR-2013
TIME PLOTTED => 08:21

Dist	COUNTY	ROUTE	POST MILES TOTAL PROJECT	SHEET No.	TOTAL SHEETS
03	But	191	0.2/11.4	4	26

REGISTERED CIVIL ENGINEER 2-25-13 DATE

2-25-13
PLANS APPROVAL DATE

REGISTERED PROFESSIONAL ENGINEER RONALD S. SYKES No. C35526 Exp. 9-30-13 CIVIL STATE OF CALIFORNIA

THE STATE OF CALIFORNIA OR ITS OFFICERS OR AGENTS SHALL NOT BE RESPONSIBLE FOR THE ACCURACY OR COMPLETENESS OF SCANNED COPIES OF THIS PLAN SHEET.

NOTE:

1. EXISTING UTILITY FACILITIES HAVE NOT BEEN PLOTTED ON THESE PLANS.

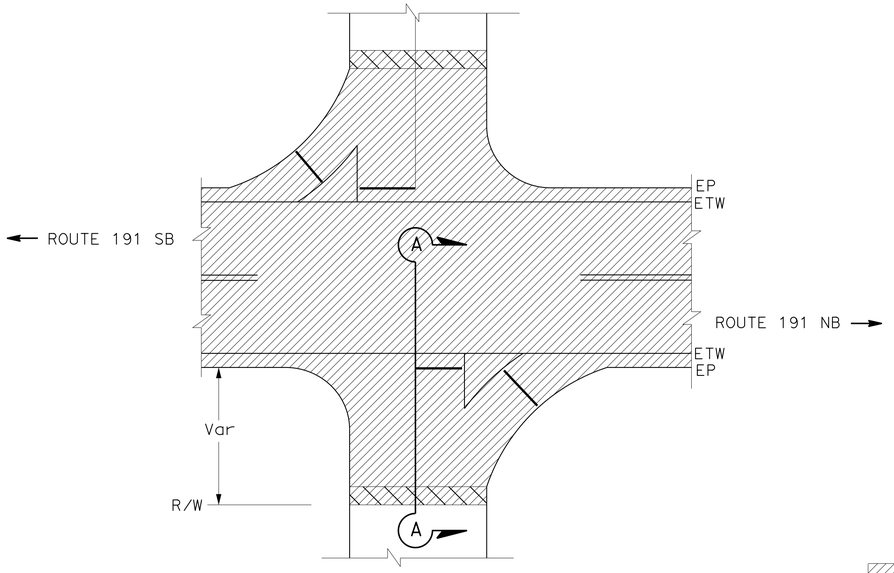

DURHAM PENTZ ROAD
PM 3.53

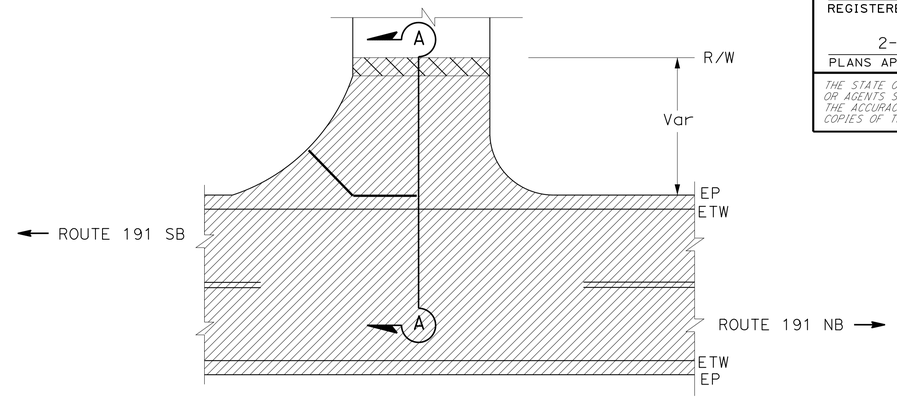

BUTTE CAMPUS DRIVE PM 3.93

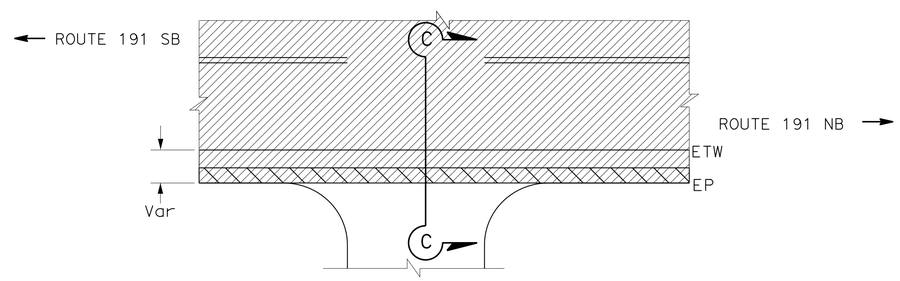

PRIVATE ROADS AND DRIVEWAYS (Typ)

EASY STREET	PM 10.06	EWALD COURT	PM 10.85
McKALE ROAD	PM 10.13	TALL PINES	PM 10.98
AMERICAN WAY	PM 10.19	NOFFSINGER LANE	PM 11.00
PALMER HILL ROAD	PM 10.19	BUSCHMANN ROAD	PM 11.15

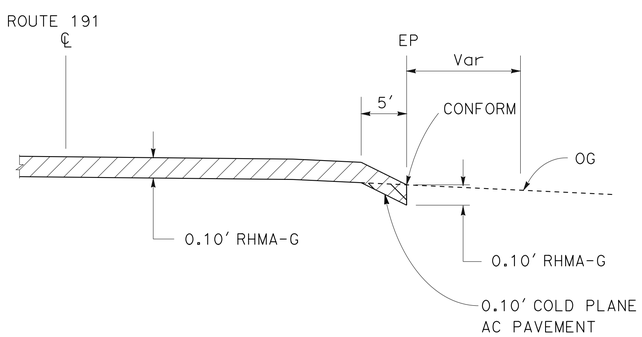

SECTION C-C

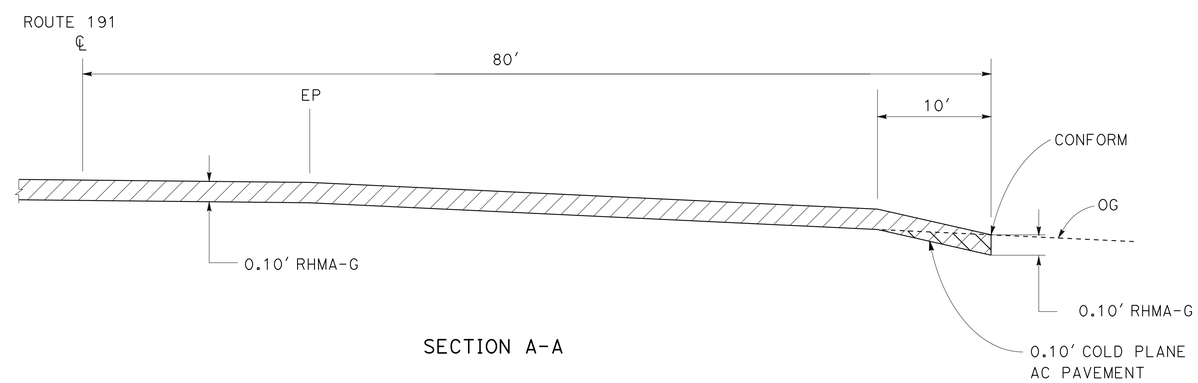

SECTION A-A

CONSTRUCTION DETAILS

NO SCALE

C-3

STATE OF CALIFORNIA - DEPARTMENT OF TRANSPORTATION
Caltrans® MAINTENANCE DESIGN

FUNCTIONAL SUPERVISOR: RONALD S. SYKES
CALCULATED-DESIGNED BY: JIM FERREIRA
CHECKED BY: RONALD S. SYKES
REVISED BY
DATE REVISED

LAST REVISION 07-19-12
DATE PLOTTED => 19-MAR-2013
TIME PLOTTED => 08:21

Dist	COUNTY	ROUTE	POST MILES TOTAL PROJECT	SHEET No.	TOTAL SHEETS
03	But	191	0.2/11.4	5	26

REGISTERED CIVIL ENGINEER 2-25-13 DATE

2-25-13
PLANS APPROVAL DATE

REGISTERED PROFESSIONAL ENGINEER RONALD S. SYKES No. C35526 Exp. 9-30-13 CIVIL STATE OF CALIFORNIA

THE STATE OF CALIFORNIA OR ITS OFFICERS OR AGENTS SHALL NOT BE RESPONSIBLE FOR THE ACCURACY OR COMPLETENESS OF SCANNED COPIES OF THIS PLAN SHEET.

LEGEND:(THIS SHEET ONLY)

- COLD PLANE AC Pvmt
- COLD PLANE AC Pvmt - CONFORM GRIND AT CURB AND GUTTER AND AT DRIVEWAYS
- PLACE MISC AC AREA
- ADJUST UTILITY COVER TO GRADE

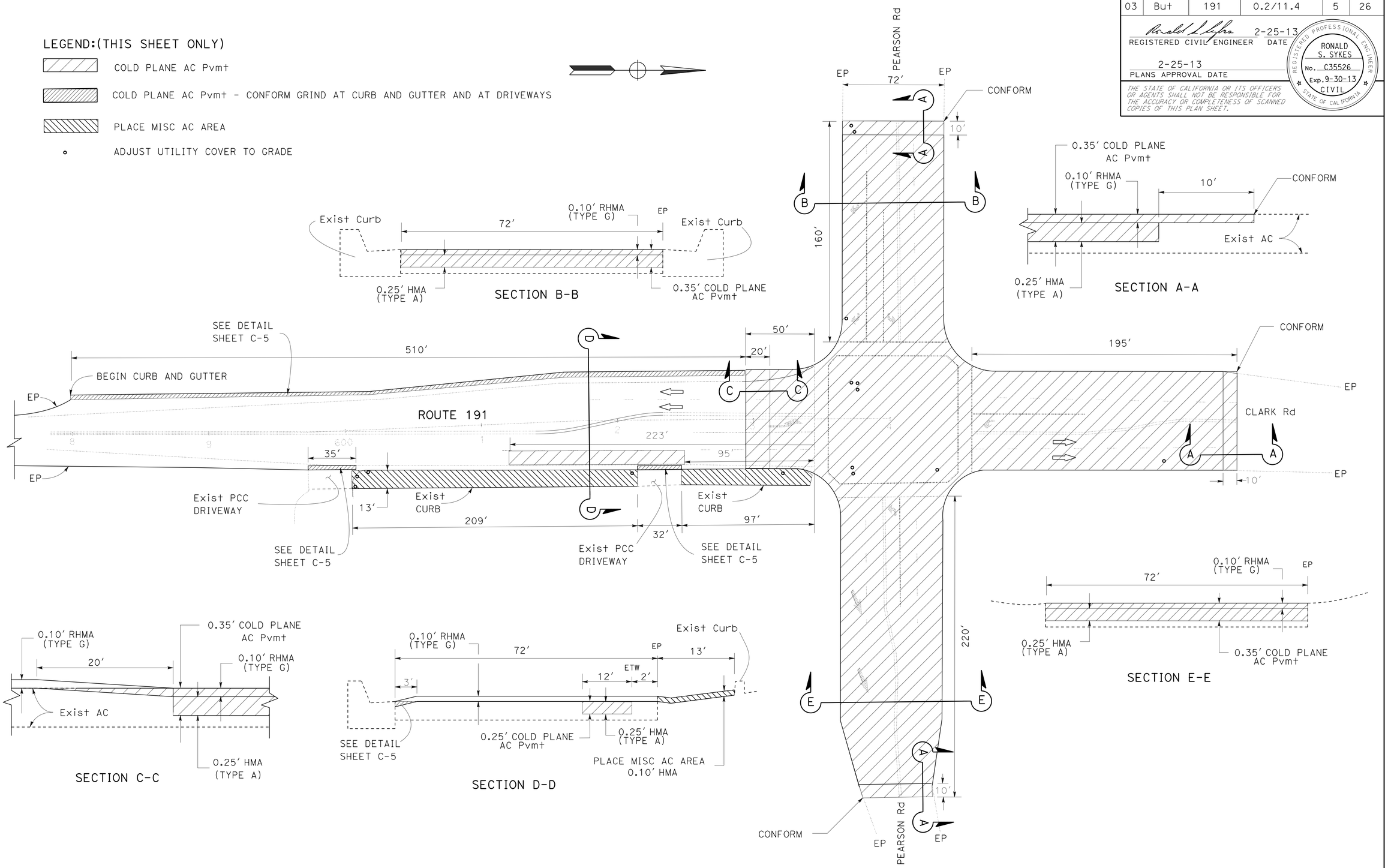

GRINDING AND PAVING AT ROUTE 191/CLARK Rd/ PEARSON Rd

PM 11.28 TO 11.38
PEARSON Rd
CLARK Rd

CONSTRUCTION DETAILS

NO SCALE

C-4

STATE OF CALIFORNIA - DEPARTMENT OF TRANSPORTATION
Caltrans®
MAINTENANCE DESIGN

FUNCTIONAL SUPERVISOR: RONALD S. SYKES
CALCULATED-DESIGNED BY: JOSEPH SAAVEDRA
CHECKED BY: RONALD S. SYKES
REVISED BY
DATE REVISED

LAST REVISION 02-07-13
DATE PLOTTED => 19-MAR-2013
TIME PLOTTED => 08:21

Dist	COUNTY	ROUTE	POST MILES TOTAL PROJECT	SHEET No.	TOTAL SHEETS
03	But	191	0.2/11.4	6	26

REGISTERED CIVIL ENGINEER 2-25-13 DATE

2-25-13
PLANS APPROVAL DATE

REGISTERED PROFESSIONAL ENGINEER RONALD S. SYKES No. C35526 Exp. 9-30-13 CIVIL STATE OF CALIFORNIA

THE STATE OF CALIFORNIA OR ITS OFFICERS OR AGENTS SHALL NOT BE RESPONSIBLE FOR THE ACCURACY OR COMPLETENESS OF SCANNED COPIES OF THIS PLAN SHEET.

NOTES:

1. EXISTING UTILITY FACILITIES HAVE NOT BEEN PLOTTED ON THESE PLANS.
2. SEE SHEET Q-1 FOR ADJUST UTILITY COVER TO GRADE LOCATIONS.

COLD PLANE ASPHALT CONCRETE PAVEMENT

POST MILE	INTERSECTION/ LOCATION DESCRIPTION	R+/L+	LENGTH OF CONFORM (N) LF	ROADWAY WIDTH (N) LF	COLD PLANE AC Pvmt SQYD
0.22	MAIN LINE CONFORM		20	32	77.1
1.68	BRIDGE CONFORM (BB)		80	40	355.6
1.68	BRIDGE CONFORM (EB)		80	40	355.6
2.61	BRIDGE CONFORM (BB)		80	40	355.6
2.61	BRIDGE CONFORM (EB)		80	40	355.6
3.53	DURHAM PENTZ	L+	10	45	50.0
3.53	DURHAM PENTZ	R+	10	41	45.6
3.93	BUTTE COLLEGE Dr	L+	10	35	38.9
4.68	BRIDGE CONFORM (BB)		80	40	355.6
4.68	BRIDGE CONFORM (EB)		80	40	355.6
6.72 TO 6.78	DIKE CONFORM	L+	390	3	130.0
6.78 TO 6.81	DIKE CONFORM	R+	330	3	110.0
7.45	MAIN LINE CONFORM		20	32	77.1
8.66	MAIN LINE CONFORM		20	40	88.9
8.75 TO 9.08	DIKE CONFORM	R+	1640	3	546.7
9.12 TO 9.18	DIKE CONFORM	R+	380	3	126.7
9.12 TO 9.18	DIKE CONFORM	R+	1670	3	556.7
10.06	EASY St	R+	177	5	98.3
10.13	MCKALE Rd	R+	200	5	111.1
10.19	AMERICAN WAY	R+	200	5	111.1
10.19	PALMER HILL Rd	L+	220	5	122.2
10.85	EWALD CT	L+	500	5	277.8
10.98	TALL PINES	L+	360	5	200.0
11.00	NOFFSINGER LANE	R+	210	5	116.7
11.15	BUSCHMANN Rd	L+	570	5	316.7
11.29 TO 11.39	GUTTER CONFORM	R+/L+	577	3	192.3
11.40	PEARSON Rd	R+	10	53	58.9
11.40	PEARSON Rd	L+	10	72	80.0
	CLARK Rd		10	72	80.0
				SUBTOTAL	5,746.4

(N) - NOT A SEPARATE PAY ITEM, FOR INFORMATION ONLY

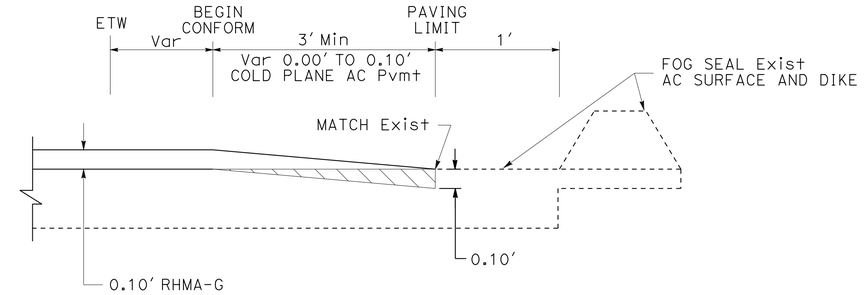

DIKE CONFORM COLD PLANE

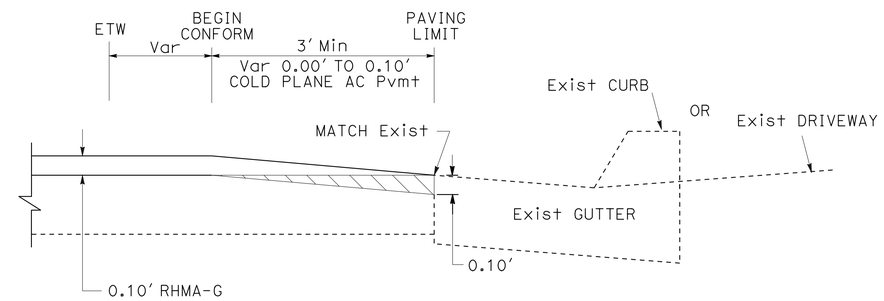

COLD PLANE AC PAVEMENT - CONFORM GRIND AT CURB AND GUTTER AND AT DRIVEWAYS

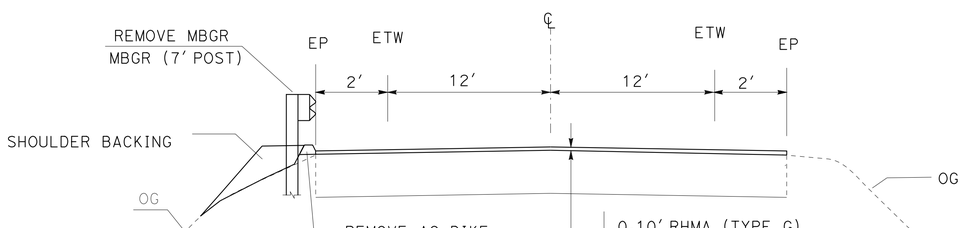

SHOULDER BACKING

ROUTE 191

PM 7.06 To 7.22

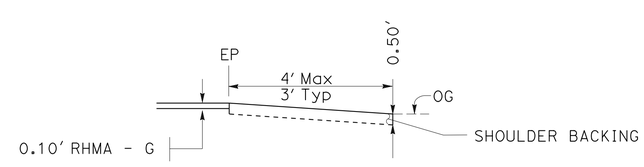

SHOULDER BACKING CONSTRUCTION

CONSTRUCTION DETAILS

NO SCALE

C-5

STATE OF CALIFORNIA - DEPARTMENT OF TRANSPORTATION
Caltrans® MAINTENANCE DESIGN

FUNCTIONAL SUPERVISOR: RONALD S. SYKES
CALCULATED-DESIGNED BY: CHARLES WOOTEN
CHECKED BY: RONALD S. SYKES
REVISED BY
DATE REVISED

LAST REVISION 09-18-12
DATE PLOTTED => 19-MAR-2013
TIME PLOTTED => 08:21

Dist	COUNTY	ROUTE	POST MILES TOTAL PROJECT	SHEET No.	TOTAL SHEETS
03	But	191	0.2/11.4	7	26

REGISTERED CIVIL ENGINEER 2-25-13 DATE

2-25-13
PLANS APPROVAL DATE

REGISTERED PROFESSIONAL ENGINEER RONALD S. SYKES No. C35526 Exp. 9-30-13 CIVIL STATE OF CALIFORNIA

THE STATE OF CALIFORNIA OR ITS OFFICERS OR AGENTS SHALL NOT BE RESPONSIBLE FOR THE ACCURACY OR COMPLETENESS OF SCANNED COPIES OF THIS PLAN SHEET.

NOTE:

1. EXISTING UTILITY FACILITIES HAVE NOT BEEN PLOTTED ON THESE PLANS.

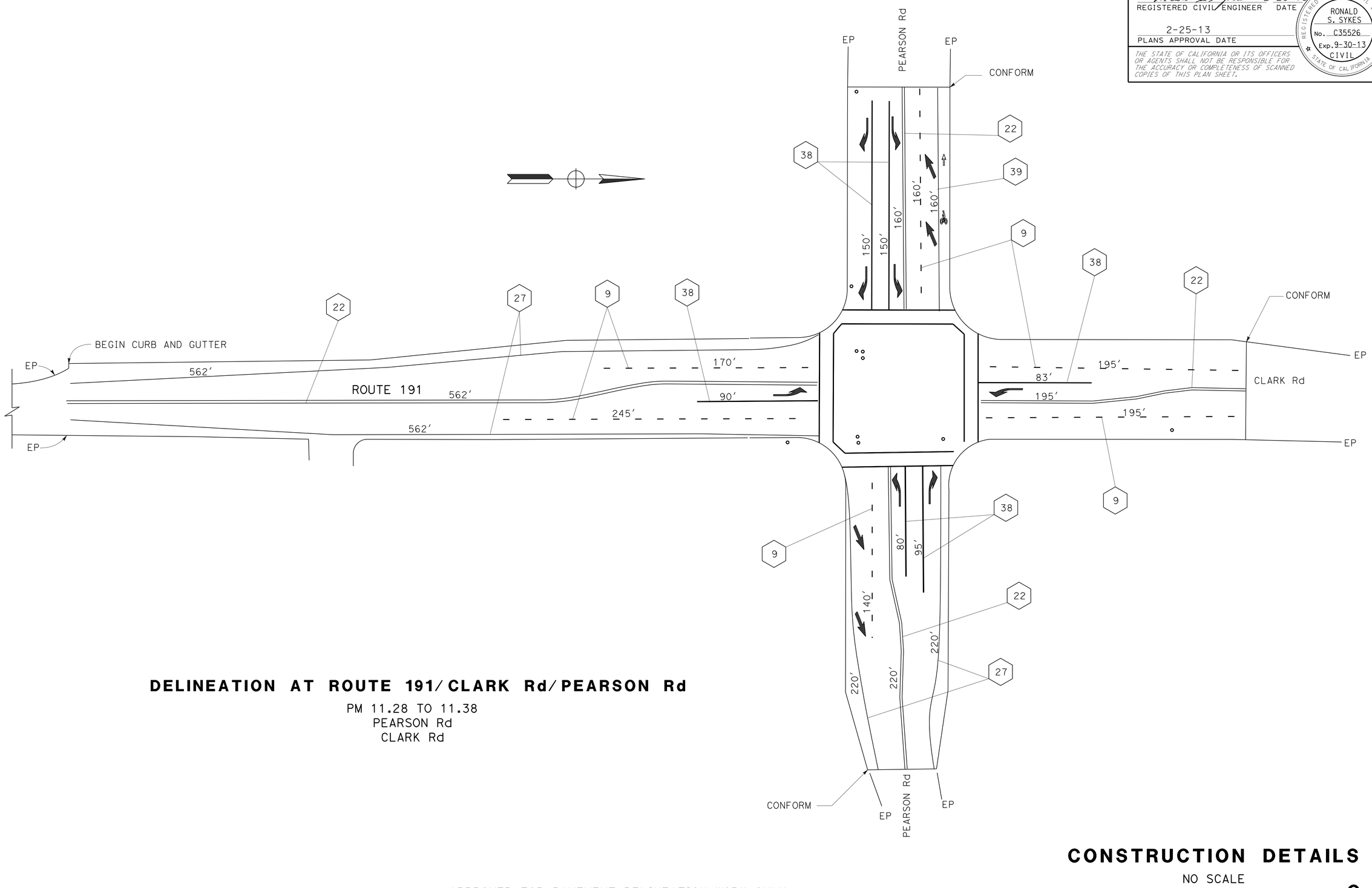

DELINEATION AT ROUTE 191/CLARK Rd/PEARSON Rd

PM 11.28 TO 11.38
PEARSON Rd
CLARK Rd

APPROVED FOR PAVEMENT DELINEATION WORK ONLY

CONSTRUCTION DETAILS

NO SCALE

C-6

STATE OF CALIFORNIA - DEPARTMENT OF TRANSPORTATION
Caltrans® MAINTENANCE DESIGN

FUNCTIONAL SUPERVISOR: RONALD S. SYKES
CALCULATED-DESIGNED BY: ROBERT M. FLOYD II
CHECKED BY: RONALD S. SYKES
REVISED BY
DATE REVISED

LAST REVISION 02-08-13
DATE PLOTTED => 19-MAR-2013
TIME PLOTTED => 08:21

Dist	COUNTY	ROUTE	POST MILES TOTAL PROJECT	SHEET No.	TOTAL SHEETS
03	But	191	0.2/11.4	8	26

REGISTERED CIVIL ENGINEER 2-25-13 DATE

2-25-13
PLANS APPROVAL DATE

REGISTERED PROFESSIONAL ENGINEER RONALD S. SYKES No. C35526 Exp. 9-30-13 CIVIL STATE OF CALIFORNIA

THE STATE OF CALIFORNIA OR ITS OFFICERS OR AGENTS SHALL NOT BE RESPONSIBLE FOR THE ACCURACY OR COMPLETENESS OF SCANNED COPIES OF THIS PLAN SHEET.

STATIONARY MOUNTED CONSTRUCTION AREA SIGNS

SIGN LETTER	SIGN CODE FEDERAL	SIGN CODE CALIFORNIA	PANEL SIZE	SIGN MESSAGE	NUMBER OF POST AND SIZE	NUMBER OF SIGNS
A	G20-1[Spec](11)		60" x 30"	ROAD WORK NEXT 11 MILES	2 - 4" x 4"	2
B		C40(Mod)	48" x 36"	TRAFFIC FINES DOUBLED IN WORK ZONES	1 - 4" x 6"	2
C	G20-2	C14	48" x 24"	END ROAD WORK	1 - 4" x 6"	4
D	W20-1	C23	48" x 48"	ROAD WORK AHEAD	1 - 6" x 6"	13
E	G20-2	C14	36" x 18"	END ROAD WORK	1 - 4" x 4"	10

SIGN DETAILS

A G20-1[Spec](11)

ROAD WORK
NEXT 11 MILES

6" C SERIES LETTERS

60"x30"

RETROREFLECTIVE ORANGE BACKGROUND WITH BLACK LEGEND AND BORDER.

B C40(Mod)<CA>

TRAFFIC FINES
DOUBLED IN
WORK ZONES

4" D SERIES LETTERS

48"x36"

RETROREFLECTIVE WHITE BACKGROUND WITH BLACK LEGEND AND BORDER.

NOTES:

1. POST DIMENSIONS ARE NOMINAL.
2. EXACT SIGN LOCATIONS TO BE DETERMINED BY THE ENGINEER.
3. EXISTING UTILITY FACILITIES HAVE NOT BEEN PLOTTED ON THESE PLANS.

LEGEND

(X) CONSTRUCTION AREA SIGN LETTER

<CA> CALIFORNIA SIGN CODE

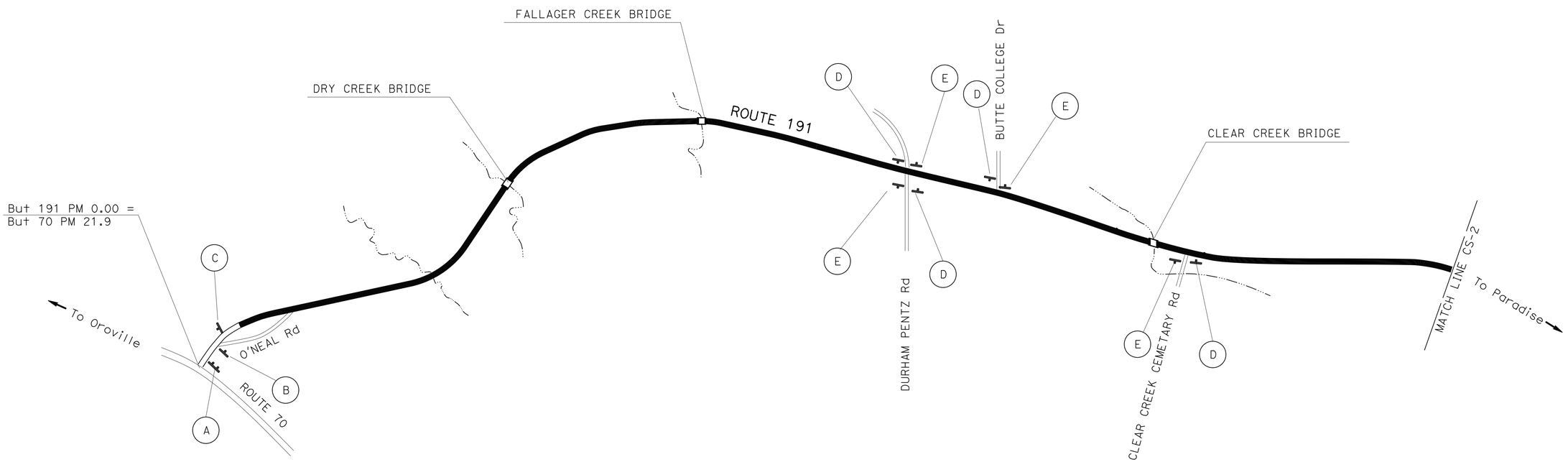

APPROVED FOR CONSTRUCTION AREA SIGN WORK ONLY

CONSTRUCTION AREA SIGNS

NO SCALE

CS-1

STATE OF CALIFORNIA - DEPARTMENT OF TRANSPORTATION
Caltrans MAINTENANCE DESIGN

FUNCTIONAL SUPERVISOR: RONALD S. SYKES

CALCULATED-DESIGNED BY: JOSEPH SAAVEDRA
CHECKED BY: ROBERT FLOYD

REVISED BY | DATE REVISED

LAST REVISION 11-02-12 | DATE PLOTTED => 19-MAR-2013 | TIME PLOTTED => 08:21

Dist	COUNTY	ROUTE	POST MILES TOTAL PROJECT	SHEET No.	TOTAL SHEETS
03	But	191	0.2/11.4	9	26

REGISTERED CIVIL ENGINEER 2-25-13 DATE

2-25-13
PLANS APPROVAL DATE

REGISTERED PROFESSIONAL ENGINEER
RONALD S. SYKES
No. C35526
Exp. 9-30-13
CIVIL
STATE OF CALIFORNIA

THE STATE OF CALIFORNIA OR ITS OFFICERS OR AGENTS SHALL NOT BE RESPONSIBLE FOR THE ACCURACY OR COMPLETENESS OF SCANNED COPIES OF THIS PLAN SHEET.

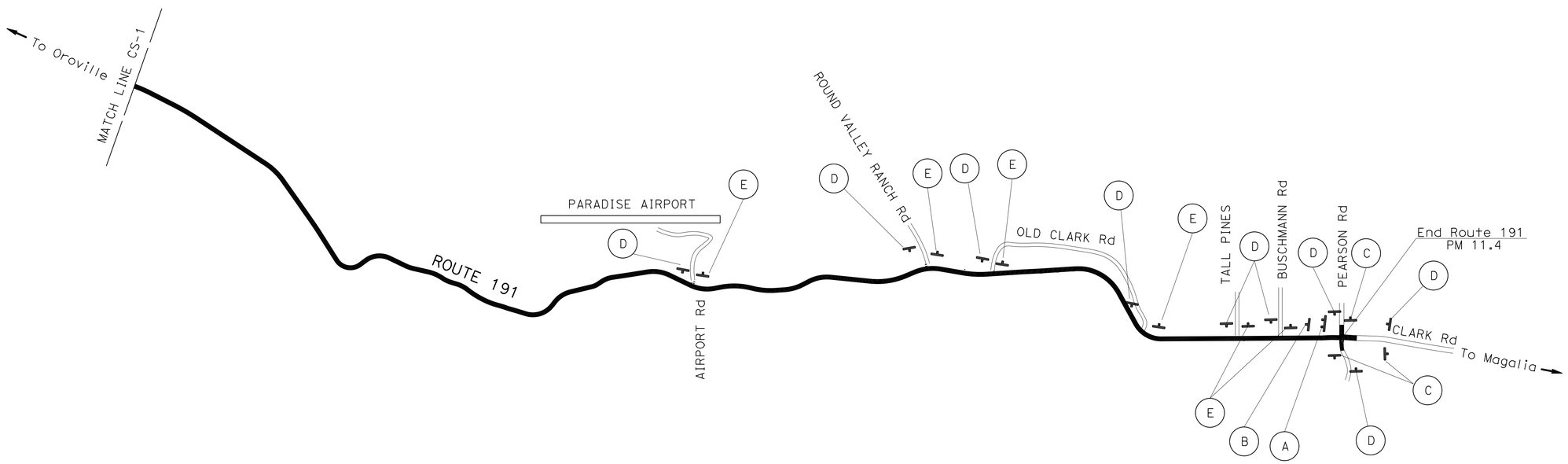

CONSTRUCTION AREA SIGNS

NO SCALE

CS-2

APPROVED FOR CONSTRUCTION AREA SIGN WORK ONLY

STATE OF CALIFORNIA - DEPARTMENT OF TRANSPORTATION
Caltrans® MAINTENANCE DESIGN

FUNCTIONAL SUPERVISOR: RONALD S. SYKES
CALCULATED-DESIGNED BY: JOSEPH SAAVEDRA
CHECKED BY: ROBERT FLOYD
REVISED BY
DATE REVISED

LAST REVISION 11-02-12
DATE PLOTTED => 19-MAR-2013
TIME PLOTTED => 08:21

Dist	COUNTY	ROUTE	POST MILES TOTAL PROJECT	SHEET No.	TOTAL SHEETS
03	But	191	0.2/11.4	10	26

REGISTERED CIVIL ENGINEER 2-25-13 DATE

2-25-13
PLANS APPROVAL DATE

REGISTERED PROFESSIONAL ENGINEER RONALD S. SYKES No. C35526 Exp. 9-30-13 CIVIL STATE OF CALIFORNIA

THE STATE OF CALIFORNIA OR ITS OFFICERS OR AGENTS SHALL NOT BE RESPONSIBLE FOR THE ACCURACY OR COMPLETENESS OF SCANNED COPIES OF THIS PLAN SHEET.

NOTE:
EWNV= ENHANCED WET NIGHT VISIBILITY
* BLSWP= BIKE LANE SYMBOL WITH PERSON

REMOVE THERMOPLASTIC PAVEMENT MARKING

LOCATION/DESCRIPTION	REMOVE THERMOPLASTIC PAVEMENT MARKING						
	"STOP"	"AHEAD"	LIMIT LINE	DETAIL 38	DETAIL 38A	TYPE III ARROW	"SIGNAL"
	SQ FT						
RTE 191 PM 3.4 To 3.7	176	62	107		210		
RTE 191 PM 3.9 TO 4.0	44		56	131		84	
RTE 191 PM 10.1 TO 10.3				174		168	
RTE 191 PM 11.1 TO 11.2		31		39		42	32
SUBTOTAL	220	93	163	344	210	294	32
TOTAL	1,356						

PAVEMENT MARKINGS

LOCATION/DESCRIPTION		THERMOPLASTIC PAVEMENT MARKING (EWNV)								
		"STOP"	"AHEAD"	"SIGNAL"	TYPE III ARROW	TYPE VI ARROW	BIKE LANE ARROW	* BLSWP	LIMIT LINE	CROSS WALK
		SQ FT								
ROUTE 191	DURHAM PENTZ Rd (PM 3.4 TO 3.7)	176	62						107	
	BUTTE CAMPUS DRIVE (PM 3.92)	44			84				56	
	EASY STREET (PM 10.10)				42					
	MCKALE Rd (PM 10.18)				42					
	AMERICAN WAY (PM 10.22)				84					
	BUSCHMANN Rd (PM 11.19)				42					
	END OF ROUTE (PM 11.39)		31	32	42					168
CITY STREET	PEARSON Rd (Lt)				168	84				174
	PEARSON Rd (Rt)				84	84	7	7		172
	CLARK Rd				42					167
SUBTOTAL		220	93	32	630	168	7	7	163	681
TOTAL		2,001								

PAVEMENT STRIPING AND PAVEMENT MARKERS

LOCATION/ DESCRIPTION	4" THERMOPLASTIC TRAFFIC STRIPE (EWNV)				4" THERMOPLASTIC TRAFFIC STRIPE (EWNV) (BROKEN 17-7)	4" THERMOPLASTIC TRAFFIC STRIPE (EWNV) (BROKEN 36-12)			4" THERMOPLASTIC TRAFFIC STRIPE (EWNV) (BROKEN 12-3)	6" THERMOPLASTIC TRAFFIC STRIPE (EWNV)	8" THERMOPLASTIC TRAFFIC STRIPE (EWNV)		PAVEMENT MARKER (RETROREFLECTIVE)			PAVEMENT MARKER (RETROREFLECTIVE RECESSED)		
DETAIL/TYPE	19	22	27B	32	9	6	19	32	27C	39	38	38A	D	H	G	D	H	G
UNITS	LF												EA					
PM 0.22 TO 6.45	11,724	24,044	65,724				11,724		2,457				1,443	450	18			
DURHAM PENTZ Rd		210	210									315	14					
BUTTE COLLEGE DRIVE		120	95						250		196		8		9			
PM 6.45 TO 11.38	466	38,196	39,076	760	415	10,740	466	760	943		409					1,598	19	
PEARSON Rd		760	440		300					160	475					34		32
CLARK Rd		390			390						82					16		14
SUBTOTAL	12,190	63,720	105,545	760	1,105	10,740	12,190	760	3,650	160	1,162	315	1465	450	27	1648	19	46
TOTAL	182,215				1,105	23,690			3,650	160	1,477		1,942			1,713		

PAVEMENT DELINEATION QUANTITIES
PDQ-1

STATE OF CALIFORNIA - DEPARTMENT OF TRANSPORTATION
Caltrans® MAINTENANCE DESIGN

FUNCTIONAL SUPERVISOR: RONALD S. SYKES
CALCULATED-DESIGNED BY: JOSEPH SAAVEDRA
CHECKED BY: ROBERT FLOYD
REVISED BY
DATE REVISED

LAST REVISION 02-12-13
DATE PLOTTED => 19-MAR-2013
TIME PLOTTED => 08:21

Dist	COUNTY	ROUTE	POST MILES TOTAL PROJECT	SHEET No.	TOTAL SHEETS
03	But	191	0.2/11.4	11	26

REGISTERED CIVIL ENGINEER 2-25-13 DATE

2-25-13
PLANS APPROVAL DATE

REGISTERED PROFESSIONAL ENGINEER RONALD S. SYKES No. C35526 Exp. 9-30-13 CIVIL STATE OF CALIFORNIA

THE STATE OF CALIFORNIA OR ITS OFFICERS OR AGENTS SHALL NOT BE RESPONSIBLE FOR THE ACCURACY OR COMPLETENESS OF SCANNED COPIES OF THIS PLAN SHEET.

METAL BEAM GUARDRAIL QUANTITIES

LOCATION DESCRIPTION PM BEGIN	END	DIRECTION R+/L+	LAYOUT TYPE	REMOVE METAL BEAM GUARD RAILING LF	METAL BEAM GUARD RAILING (WOOD POST) LF	METAL BEAM GUARD RAILING (7' WOOD POST) LF	ALTERNATIVE FLARED TERMINAL SYSTEM EA	TRANSITION RAILING (TYPE WB) EA	OBJECT MARKER (TYPE L-1) EA	END ANCHOR ASSEMBLY (TYPE SFT) EA	BURIED END POST (N) EA
0.48	0.51	R+	11B	150.0	1,12.5		1		1	1	
0.48	0.51	L+	11E	162.5	87.5		2		1		
1.66	1.67	R+	12B	62.5			1	1	1		
1.66	1.67	L+	12BB	62.5			1	1	1		
1.70	1.72	R+	12BB	62.5			1	1	1		
1.70	1.72	L+	12B	62.5			1	1	1		
2.60	2.61	R+	12B	62.5			1	1	1		
2.60	2.61	L+	12BB	62.5			1	1	1		
2.62	2.63	R+	12BB	62.5			1	1	1		
2.62	2.63	L+	12B	62.5			1	1	1		
3.89	3.92	R+	11B	162.5	125		1		1	1	
3.89	3.92	L+	11B	162.5	125		1		1	1	
4.66	4.67	R+	12C	62.5				1	1		1
4.66	4.67	L+	12BB	62.5			1	1	1		
4.69	4.70	R+	12BB	62.5			1	1	1		
4.69	4.70	L+	12B	62.5			1	1	1		
7.06	7.22	L+	11L	812.5		775	1		1		1
7.16	7.22	R+	11C	400.0	400				1	1	1
8.69	9.07	R+	11L	2,000.0	1,962.5		1		1		1
9.10	9.19	R+	11L	475.5	437.5		1		1		1
SUBTOTAL				5,075.0	3,250	775	19	14	20	4	5
TOTAL				5,075.0	3,250	775	19	14	20	4	

(N) - NOT A SEPARATE PAY ITEM, FOR INFORMATION ONLY

DIKE

PM BEGIN	END	DIRECTION L/R	REMOVE ASPHALT CONCRETE DIKE LF	PLACE HMA DIKE (TYPE C) LF	PLACE HMA DIKE (TYPE F) LF	MINOR HMA TON
7.05	7.06	L	25	25		0.2
7.22	7.23	L	25	25		0.2
7.06	7.22	L	750		750	10.4
SUBTOTAL			800	50	750	10.8
TOTAL			800	50	750	*

*-SEE ROADWAY QUANTITIES FOR TOTAL QUANTITY

ROADWAY QUANTITIES

LOCATION DESCRIPTION (PM) BEGIN END	RUBBERIZED HOT MIX ASPHALT (GAP GRADED) TON	TACK COAT TON	ASPHALTIC EMULSION (FOG SEAL COAT) TON	HMA (TYPE A) TON	PLACE HMA (MISCELLANEOUS AREA) SQYD	COLD PLANE ASPHALT CONCRETE PAVEMENT SQYD	SHOULDER BACKING TON	MINOR HMA TON
PM 0.2 TO 7.4	9,996	10.9	0.1			2,662	2,800	
PM 7.4 TO 8.6							250	
PM 8.6 TO 11.4	4,478	13.4	0.7			3,062	600	
DURHAM PENTZ Rd	85							
BUTTE COLLEGE DRIVE	41							
PEARSON/CLARK Rd	470			1,132	442	6,500		
FROM DIKE TABLE								10.8
TOTAL	15,081	24.3	0.8	1,132	442	12,224	3,650	10.8

ADJUST UTILITY COVER

POST MILE	INTERSECTION/ LOCATION DESCRIPTION	R+/L+	(N) LID DIAMETER/ BOX DIMENSIONS INCH	(N) RAPID SETTING CONCRETE CY	(N) BAR REINFORCEMENT STEEL LB	ADJUST UTILITY COVER TO GRADE EA	COMMENT
10.09	EASY St	R+	12	0.30	15.03	3	PID
10.18	MCKALE ROAD	R+	12	0.10	5.01	1	PID
10.23	AMERICAN WAY	R+	12	0.20	10.02	2	PID
11.32	340' SOUTH OF PEARSON Rd	R+	12	0.30	15.03	3	PID
11.35	150' SOUTH OF PEARSON Rd	R+	12	0.10	5.01	1	PID
11.37	35' SOUTH OF PEARSON Rd	R+	12	0.10	5.01	1	PGE
11.40	PEARSON Rd	R+	12	0.20	10.02	2	PID
11.40	PEARSON Rd	L+	12	0.30	15.03	3	PID
11.40	70' WEST of CLARK Rd CENTERLINE	L+	12	0.10	5.01	1	PID
11.40	200' WEST OF CLARK Rd CENTERLINE	L+	12	0.10	5.01	2	PID
11.42	PEARSON ROAD	L+	12	0.20	10.02	1	PGE
11.45	150' NORTH OF PEARSON Rd	R+	12	0.10	5.01	1	PID
SUBTOTAL				2.10	105.21	21	
TOTAL						21	

(N) NOT A SEPARATE PAY ITEM, FOR INFORMATION ONLY

SUMMARY OF QUANTITIES

Q-1

STATE OF CALIFORNIA - DEPARTMENT OF TRANSPORTATION
Caltrans® MAINTENANCE DESIGN

FUNCTIONAL SUPERVISOR: RONALD S. SYKES
CALCULATED-DESIGNED BY / CHECKED BY
ROBERT M. FLOYD II / RONALD S. SYKES
REVISED BY / DATE REVISED

LAST REVISION 09-18-12 | DATE PLOTTED => 19-MAR-2013 | TIME PLOTTED => 08:21

Dist	COUNTY	ROUTE	POST MILES TOTAL PROJECT	SHEET No.	TOTAL SHEETS
03	But	191	0.2/11.4	12	26

REGISTERED ELECTRICAL ENGINEER 2-22-13 DATE

2-25-13
PLANS APPROVAL DATE

REGISTERED PROFESSIONAL ENGINEER JASKARAN BOPARAI No. E15056 Exp. 12/31/13 ELECTRICAL STATE OF CALIFORNIA

THE STATE OF CALIFORNIA OR ITS OFFICERS OR AGENTS SHALL NOT BE RESPONSIBLE FOR THE ACCURACY OR COMPLETENESS OF SCANNED COPIES OF THIS PLAN SHEET.

NOTE:

1. FOR ACCURATE RIGHT OF WAY, CONTACT RIGHT OF WAY ENGINEERING AT THE DISTRICT OFFICE.

LEGEND (THIS SHEET ONLY)

1 FOR INSTALLATION SEE DETAIL 'D' IN STANDARD PLANS SHEET ES-7R. VIVDS CABLE SHALL BE ROUTED THROUGH SIGNAL MAST ARMS END CAP.

2 RC 200 W HPS LUMINAIRE.
INSTALL 165 W LED LUMINAIRE ON EXISTING MAST ARM. SEE POLE SCHEDULE SHEET E-2.

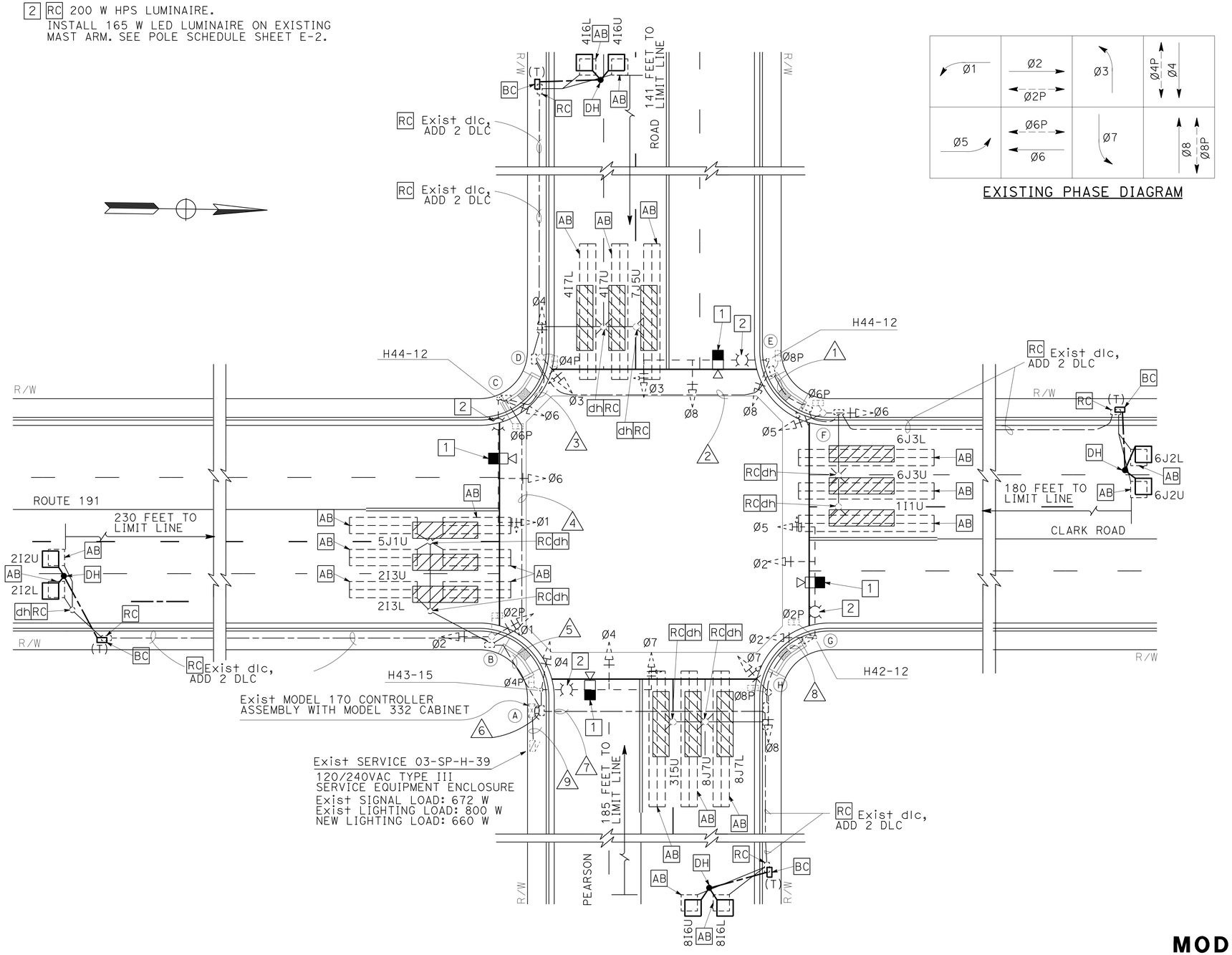

APPROVED FOR ELECTRICAL WORK ONLY

MODIFY SIGNAL AND LIGHTING

SCALE: 1" = 20'

E-1

STATE OF CALIFORNIA - DEPARTMENT OF TRANSPORTATION
Caltrans® ELECTRICAL DESIGN

FUNCTIONAL SUPERVISOR: NELSON LEE
CALCULATED-DESIGNED BY: NATHAN DEKENS
CHECKED BY: JASKARAN S. BOPARAI
REVISED BY
DATE REVISED

LAST REVISION 02-19-13
DATE PLOTTED => 19-MAR-2013
TIME PLOTTED => 08:21

Dist	COUNTY	ROUTE	POST MILES TOTAL PROJECT	SHEET No.	TOTAL SHEETS
03	But	191	0.2/11.4	13	26

REGISTERED ELECTRICAL ENGINEER 2-22-13 DATE

2-25-13
PLANS APPROVAL DATE

REGISTERED PROFESSIONAL ENGINEER JASKARAN BOPARAI No. E15056 Exp. 12/31/13 ELECTRICAL STATE OF CALIFORNIA

THE STATE OF CALIFORNIA OR ITS OFFICERS OR AGENTS SHALL NOT BE RESPONSIBLE FOR THE ACCURACY OR COMPLETENESS OF SCANNED COPIES OF THIS PLAN SHEET.

EXISTING CONDUIT AND CONDUCTOR SCHEDULE

CONDUCTOR DESIGNATION		RUN NUMBER AND SIZE								
CABLE TYPE	PHASE	1	2	3	4	5	6	7	8	9
		2"	2½"	3"	3"	3½"	2-3"	2"	2"	1½"
#14 AWG	1				3	3	3			
	2					3	6	3	3	
	3		3	3	3	3	3			
	4			3	3	3	6			
	5	3	3	3	3	3	6	3	3	
	6	3	3	3	3	3	3			
	7						6	3		
	8		3	3	3	3	6	3		
	2P					2	4	2	2	
	4P			2	2	2	2			
	6P	2	2	2	2	2	2			
	8P		2	2	2	2	4	2		
	2PPB					1	2	1	1	
	4PPB				1	1	1			
	6PPB		1	1	1	1	1			
	8PPB	1	1	1	1	1	2	1	1	
	PPB Com	1	1	1	1	1	2	1	1	
	SPARES	3	3	3	3	3	3	3	3	
	PEU						3			3
	TOTAL	13	22	27	31	37	65	22	14	3
#10 AWG	SIGNAL NEUTRAL	1	1	1	1	1	2	1	1	
	LUMINAIRES		2	2	2	2	2	2	2	2
	TOTAL	1	3	3	3	3	4	3	3	2
**INSTALL VIVDS		**1	**2	**2	**3	**3	**4			
DLC	DETECTORS									
	Ø1									
	Ø2					*2	*2			
	Ø3									
	Ø4			*2	*2	*2	*2			
	Ø5									
	Ø6	*2	*2	*2	*2	*2	*2			
	Ø7									
	Ø8						*2	*2		
	TOTAL DLC	*2	*2	*4	*4	*6	*8	*2		

* INSTALL NEW DLC

** INSTALL NEW VIVDS

EXISTING POLE AND EQUIPMENT SCHEDULE

No.	STANDARDS			VEH SIG MTG				PEDESTRIAN SIGNAL		PPB		HPS LIGHTING
	TYPE	SMA (ft)	LMA (ft)	Ø	MAST ARM	Ø	POLE	Ø	MTG	Ø	ARROW	
Ⓐ	26-3-70		15			4	SV-1-T	4	SP-1-CSL	2	←	*** 165 W LED
				4	MAS							
				7	MAT							
Ⓑ	1-B					1	TV-2-T	2	SP-1-T	4	→	
						2						
Ⓒ	26-3-70	45	12			6	SV-1-T	6	SP-1-CSL	4	←	*** 165 W LED
				6	MAS							
				1	MAT							
Ⓓ	1-B					3	TV-2-T	4	SP-1-T	6	→	
						4						
Ⓔ	26-3-70	45	12			8	SV-1-T	8	SP-1-CSL	6	←	*** 165 W LED
				8	MAS							
				3	MAT							
Ⓕ	1-B					5	TV-2-T	6	SP-1-T	8	→	
						6						
Ⓖ	26-3-70	45	12			2	SV-1-T	2	SP-1-CSL	8	←	*** 165 W LED
				2	MAS							
				5	MAT							
Ⓗ	1-B					7	TV-2-T	8	SP-1-T	2	→	
						8						

*** INSTALL NEW 165 W LED LUMINARE

APPROVED FOR ELECTRICAL WORK ONLY

MODIFY SIGNAL AND LIGHTING

NO SCALE

E-2

REVISED BY | DATE REVISED
NATHAN DEKENS | JASKARAN S. BOPARAI
CALCULATED-DESIGNED BY | CHECKED BY
FUNCTIONAL SUPERVISOR
NELSON LEE

STATE OF CALIFORNIA - DEPARTMENT OF TRANSPORTATION
Caltrans
ELECTRICAL DESIGN

LAST REVISION 02-19-13 | DATE PLOTTED => 19-MAR-2013 | TIME PLOTTED => 08:21

Dist	COUNTY	ROUTE	POST MILES TOTAL PROJECT	SHEET No.	TOTAL SHEETS
03	But	191	0.2/11.4	14	26

REGISTERED ELECTRICAL ENGINEER 2-22-13 DATE

2-25-13
PLANS APPROVAL DATE

REGISTERED PROFESSIONAL ENGINEER JASKARAN BOPARAI No. E15056 Exp. 12/31/13 ELECTRICAL STATE OF CALIFORNIA

THE STATE OF CALIFORNIA OR ITS OFFICERS OR AGENTS SHALL NOT BE RESPONSIBLE FOR THE ACCURACY OR COMPLETENESS OF SCANNED COPIES OF THIS PLAN SHEET.

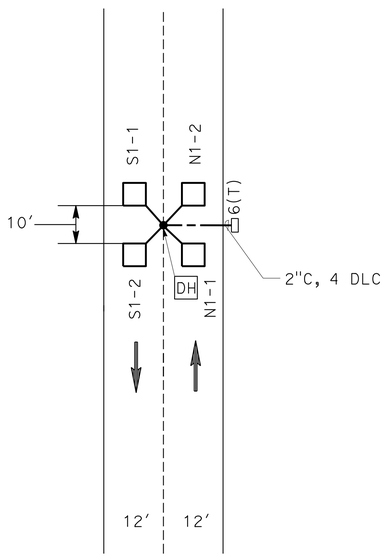

DETAIL

TRAFFIC MONITORING STATION (COUNT)
(TYPICAL)

COUNT STATION LOCATIONS

APPROXIMATE LOCATION	APPROXIMATE POST MILE	SIDE OF FREEWAY	NUMBER OF LANES EACH DIRECTION	REMARKS
				EXACT LOCATION TO BE DETERMINED BY ENGINEER.
BUT 191 AND DURHAM-PENTZ ROAD	3.773	W	1	INSTALL COUNT STATION AS SHOWN ON TYPICAL DETAIL. LOCATE PULL BOX ON WEST SIDE OF HIGHWAY.
CLARK AND PEARSON ROAD	11.284	W	1	INSTALL COUNT STATION AS SHOWN ON TYPICAL DETAIL. LOCATE PULL BOX ON WEST SIDE OF HIGHWAY.

N1-2

- 1 = ENTERING DETECTOR
- 2 = LEAVING DETECTOR
- LANE NUMBER
  - 1 = 1ST LANE FROM LEFT
  - 2 = 2ND LANE FROM LEFT
  - 3 = 3RD LANE FROM LEFT
  - 4 = 4TH LANE FROM LEFT
- N = NORTHBOUND
- S = SOUTHBOUND
- E = EASTBOUND
- W = WESTBOUND

FREEWAY DETECTOR IDENTIFICATION

APPROVED FOR ELECTRICAL WORK ONLY

TRAFFIC MONITORING STATION (COUNT)

NO SCALE

E-3

STATE OF CALIFORNIA - DEPARTMENT OF TRANSPORTATION
Caltrans® ELECTRICAL DESIGN

FUNCTIONAL SUPERVISOR: NELSON LEE
CALCULATED-DESIGNED BY: NATHAN DEKENS
CHECKED BY: JASKARAN S. BOPARAI
REVISED BY
DATE REVISED

LAST REVISION 02-19-13 | DATE PLOTTED => 19-MAR-2013 | TIME PLOTTED => 08:22

Dist	COUNTY	ROUTE	POST MILES TOTAL PROJECT	SHEET No.	TOTAL SHEETS
03	But	191	0.2/11.4	15	26

REGISTERED ELECTRICAL ENGINEER 2-22-13 DATE

2-25-13
PLANS APPROVAL DATE

REGISTERED PROFESSIONAL ENGINEER
JASKARAN BOPARAI
No. E15056
Exp. 12/31/13
ELECTRICAL
STATE OF CALIFORNIA

THE STATE OF CALIFORNIA OR ITS OFFICERS OR AGENTS SHALL NOT BE RESPONSIBLE FOR THE ACCURACY OR COMPLETENESS OF SCANNED COPIES OF THIS PLAN SHEET.

MODIFY SIGNAL AND LIGHTING

SHEET No.	(N) No. 5 (T) PB	(N) DETECTOR HANDHOLE	(N) DLC CABLE	(N) TYPE A LOOP	(N) 165 W LED LUMINARE
	EA	EA	FT	EA	EA
E-1	4	4	4000	8	4

TRAFFIC MONITORING STATION (COUNT)

SHEET No.	(N) No. 6 (T) PB	(N) DETECTOR HANDHOLE	(N) DLC CABLE	(N) 2" TYPE 3 CONDUIT	(N) TYPE A LOOP
	EA	EA	FT	FT	EA
E-3	2	2	100	48	8

(N) - NOT A SEPARATE PAY ITEM, FOR INFORMATION ONLY

APPROVED FOR ELECTRICAL WORK ONLY

ELECTRICAL QUANTITIES

E-4

STATE OF CALIFORNIA - DEPARTMENT OF TRANSPORTATION
Caltrans® ELECTRICAL DESIGN

FUNCTIONAL SUPERVISOR: NELSON LEE
CALCULATED-DESIGNED BY: NATHAN DEKENS
CHECKED BY: JASKARAN S. BOPARAI
REVISED BY
DATE REVISED

LAST REVISION 02-19-13
DATE PLOTTED => 19-MAR-2013
TIME PLOTTED => 08:22

Dist	COUNTY	ROUTE	POST MILES TOTAL PROJECT	SHEET No.	TOTAL SHEETS
03	But	191	0.2/11.4	16	26

REGISTERED CIVIL ENGINEER 12-7-12 DATE

2-25-13
PLANS APPROVAL DATE

REGISTERED PROFESSIONAL ENGINEER Gurinderpal Bhullar No. C48815 Exp. 9-30-14 CIVIL STATE OF CALIFORNIA

THE STATE OF CALIFORNIA OR ITS OFFICERS OR AGENTS SHALL NOT BE RESPONSIBLE FOR THE ACCURACY OR COMPLETENESS OF SCANNED COPIES OF THIS PLAN SHEET.

TYPICAL LANE CLOSURE

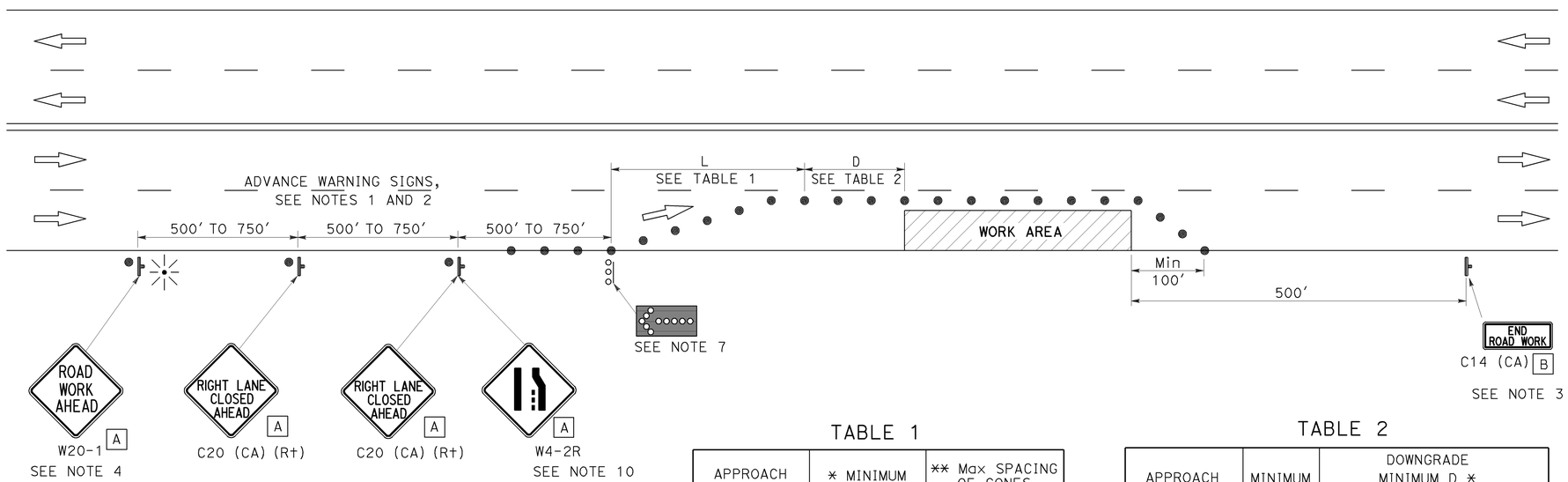

NOTES:

Unless otherwise specified in the special provisions, all temporary warning signs shall have black legend on orange background.

California code are designated by (CA). Otherwise, Federal (MUTCD) codes are shown.

TABLE 1

APPROACH SPEED	* MINIMUM L	** Max SPACING OF CONES ALONG TAPER
mph	ft	ft
20 AND BELOW	80	20
25	125	25
30	180	30
35	245	35
40	320	40
45	540	45
50	600	50
Over 50	SEE NOTE 9	

* USE L FOR LANE WIDTHS LESS THAN OR EQUAL TO 12'.
** SEE NOTE 8.

TABLE 2

APPROACH SPEED	MINIMUM D	DOWNGRADE MINIMUM D *		
		-3%	-6%	-9%
mph	ft	ft	ft	ft
25 AND BELOW	155	158	165	173
30	200	205	215	227
35	250	257	271	287
40	305	315	333	354
45	360	378	400	427
50	425	446	474	507
OVER 50	SEE NOTE 9			

* USE ON SUSTAINED DOWNGRADE STEEPER THAN -3 PERCENT AND LONGER THAN 1 MILE.

LEGEND

- TRAFFIC CONE
- TEMPORARY SIGN
- FLASHING ARROW SIGN (FAS)
- FAS SUPPORT OR TRAILER
- PORTABLE FLASHING BEACON

SIGN PANEL SIZE (Min)

A 36" x 36"

B 36" x 18"

NOTES:

1. Where approach speeds are low, advance warning signs may be placed at 300' spacing and placed closer in urban areas.
2. Each advance warning sign shall be equipped with at least two flags for daytime closure. Each flag shall be at least 16" x 16" in size and shall be orange or fluorescent red-orange in color. Flashing beacons shall be placed at the locations indicated for lane closure during hours of darkness.
3. A C14 (CA) "END ROAD WORK" sign, as appropriate, shall be placed at the end of the lane closure unless the end of work area is obvious, or ends within a larger project's limits.
4. If the W20-1 sign would follow within 2000' of a stationary W20-1 or C11 (CA) "ROAD WORK NEXT _____ MILES", use a C20 (CA) sign for the first advance warning sign.
5. All cones used for lane closures during the hours of darkness shall be fitted with retroreflective bands (or sleeves) as specified in the specifications.
6. Portable delineators, placed at one-half the spacing indicated for traffic cones, may be used instead of cones for daytime closures only.
7. Flashing arrow sign shall be either Type I or Type II.
8. The maximum spacing between cones along a tangent shall be 50' and along a taper shall be approximately as shown in Table 1.
9. For approach speeds over 50 mph, use the "Traffic Control System for Lane Closure On Freeways And Expressways" plan for lane closure details and requirements.
10. When specified in the special provisions, a W4-2 "LANE ENDS" symbol sign is to be used in place of the C20 (CA) "RIGHT LANE CLOSED AHEAD" sign.

STATE OF CALIFORNIA
DEPARTMENT OF TRANSPORTATION

TRAFFIC CONTROL SYSTEM FOR LANE CLOSURE ON MULTILANE CONVENTIONAL HIGHWAYS

NO SCALE

TCS-1

STATE OF CALIFORNIA - DEPARTMENT OF TRANSPORTATION

Caltrans

FUNCTIONAL SUPERVISOR | CALCULATED-DESIGNED BY | CHECKED BY | REVISED BY | DATE REVISED

LAST REVISION 00-00-00 | DATE PLOTTED => 10-DEC-2012 | TIME PLOTTED => 09:45

Dist	COUNTY	ROUTE	POST MILES TOTAL PROJECT	SHEET No.	TOTAL SHEETS
03	But	191	0.2/11.4	17	26

REGISTERED CIVIL ENGINEER 12-7-12 DATE

2-25-13
PLANS APPROVAL DATE

REGISTERED PROFESSIONAL ENGINEER Gurinderpal Bhullar No. C48815 Exp. 9-30-14 CIVIL STATE OF CALIFORNIA

THE STATE OF CALIFORNIA OR ITS OFFICERS OR AGENTS SHALL NOT BE RESPONSIBLE FOR THE ACCURACY OR COMPLETENESS OF SCANNED COPIES OF THIS PLAN SHEET.

NOTES:

Unless otherwise specified in the special provisions, all temporary warning signs shall have black legend on orange background.

California code are designated by (CA). Otherwise, Federal (MUTCD) codes are shown.

TYPICAL LANE CLOSURE WITH REVERSIBLE CONTROL

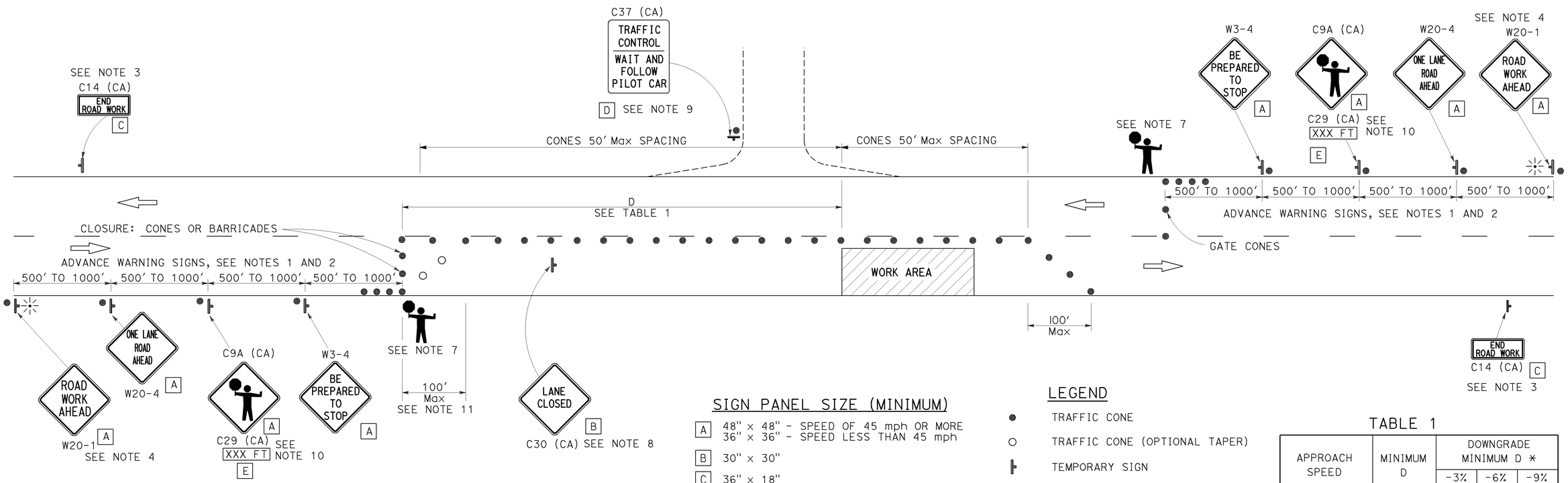

SIGN PANEL SIZE (MINIMUM)

- A: 48" x 48" - SPEED OF 45 mph OR MORE; 36" x 36" - SPEED LESS THAN 45 mph
- B: 30" x 30"
- C: 36" x 18"
- D: 36" x 42"
- E: 36" x 9"

LEGEND

- TRAFFIC CONE
- TRAFFIC CONE (OPTIONAL TAPER)
- TEMPORARY SIGN
- PORTABLE FLASHING BEACON
- FLAGGER

TABLE 1

APPROACH SPEED	MINIMUM D	DOWNGRADE MINIMUM D *		
		-3%	-6%	-9%
mph	ft	ft	ft	ft
25 AND BELOW	155	158	165	173
30	200	205	215	227
35	250	257	271	287
40	305	315	333	354
45	360	378	400	427
50	425	446	474	507
55	495	520	553	593
60	570	598	638	686
65	645	682	728	785

* USE ON SUSTAINED DOWNGRADE STEEPER THAN -3 PERCENT AND LONGER THAN 1 MILE.

NOTES:

1. Where approach speeds are low, advance warning signs may be placed at 300' spacing, and closer in urban areas.
2. Each advance warning sign in each direction of travel shall be equipped with at least two flags for daytime closure. Each flag shall be at least 16" x 16" in size and shall be orange or fluorescent red-orange in color. Flashing beacons shall be placed at the locations indicated for lane closure during hours of darkness.
3. A C14 (CA) "END ROAD WORK" sign, as appropriate, shall be placed at the end of the lane control unless the end of work area is obvious, or ends within a larger project's limits.
4. If the W20-1 sign would follow within 2000' of a stationary W20-1 or C11 (CA) "ROAD WORK NEXT _____MILES", use a W20-4 sign for the first advance warning sign.
5. All cones used for lane closures during the hours of darkness shall be fitted with retroreflective bands (or sleeves) as specified in the specifications.
6. Portable delineators, placed at one-half the spacing indicated for traffic cones, may be used instead of cones for daytime closures only.
7. Additional advance flaggers may be required. Flagger should stand in a conspicuous place, be visible to approaching traffic as well as approaching vehicles after the first vehicle has stopped. During the hours of darkness, the flagging-station and flagger shall be illuminated and clearly visible to approaching traffic. The illumination footprint of the lighting on the ground shall be at least 20' in diameter. Place a minimum of four cones at 50' intervals in advance of flagger station as shown.
8. Place C30 (CA) "LANE CLOSED" sign at 500' to 1000' intervals throughout extended work areas. They are optional if the work area is visible from the flagger station.
9. When a pilot car is used, place a C37 (CA) "TRAFFIC CONTROL-WAIT AND FOLLOW PILOT CAR" sign at all intersections within traffic control area. Signs shall be clean and visible at all times.
10. An optional C29 (CA) sign may be placed below the C9A (CA) sign.
11. Traffic cones or barricades may be placed on the optional taper as shown, barricades shall be Type I, II, or III.

STATE OF CALIFORNIA
DEPARTMENT OF TRANSPORTATION

TRAFFIC CONTROL SYSTEM FOR LANE CLOSURE ON TWO LANE CONVENTIONAL HIGHWAYS

NO SCALE

TCS-2

STATE OF CALIFORNIA - DEPARTMENT OF TRANSPORTATION

Caltrans

FUNCTIONAL SUPERVISOR | CALCULATED-DESIGNED BY | CHECKED BY | REVISED BY | DATE REVISED

LAST REVISION 00-00-00 | DATE PLOTTED => 10-DEC-2012 | TIME PLOTTED => 09:45

Dist	COUNTY	ROUTE	POST MILES TOTAL PROJECT	SHEET No.	TOTAL SHEETS
03	But	191	0.2/11.4	18	26

REGISTERED CIVIL ENGINEER 12-7-12 DATE

2-25-13
PLANS APPROVAL DATE

REGISTERED PROFESSIONAL ENGINEER Gurinderpal Bhullar No. C48815 Exp. 9-30-14 CIVIL STATE OF CALIFORNIA

THE STATE OF CALIFORNIA OR ITS OFFICERS OR AGENTS SHALL NOT BE RESPONSIBLE FOR THE ACCURACY OR COMPLETENESS OF SCANNED COPIES OF THIS PLAN SHEET.

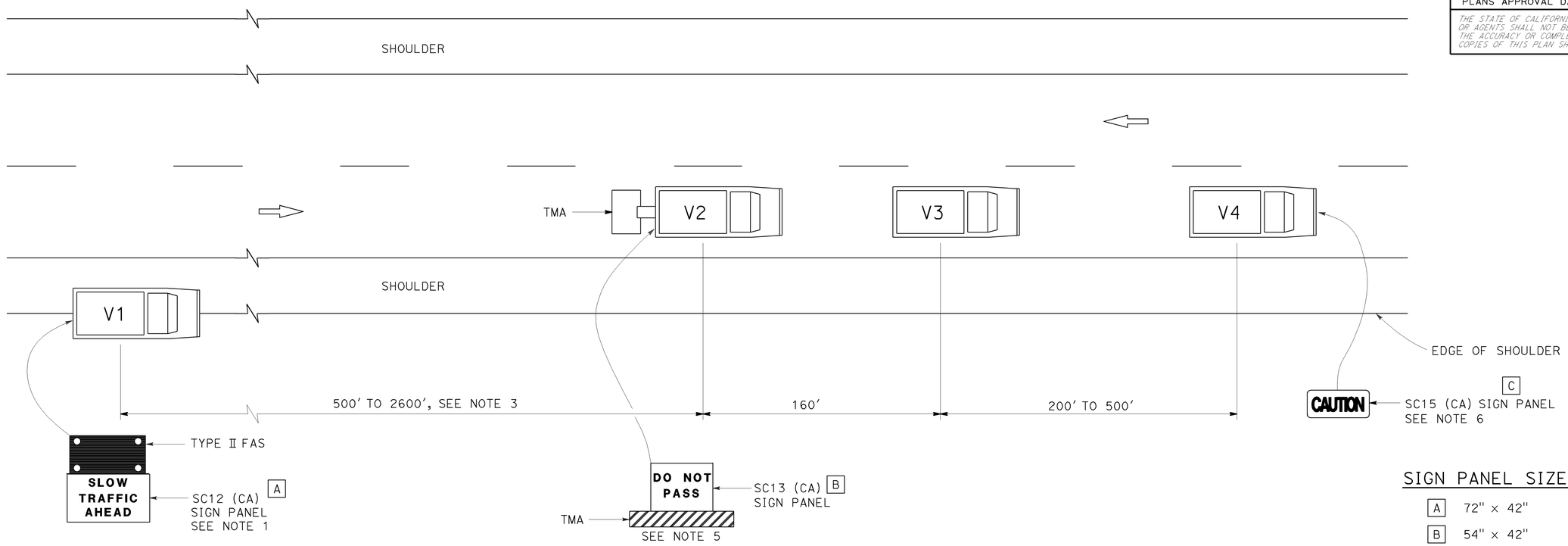

SIGN PANEL SIZE (Min)

A	72" × 42"
B	54" × 42"
C	54" × 24"

LEGEND

V1	SIGN VEHICLE
V2	SHADOW VEHICLE
V3	WORK/APPLICATION VEHICLE
V4	SIGN VEHICLE
TMA	TRUCK-MOUNTED ATTENUATOR
	FLASHING ARROW SIGN (FAS) IN FLASHING CAUTION MODE

NOTES:

1. Either a changeable message sign or a SC12 (CA) "SLOW TRAFFIC AHEAD" sign shall be mounted on the rear of sign vehicle V1. A Type II flashing arrow sign may be used with the SC12 (CA) sign panel.
2. Sign vehicle V1 should be positioned where highly visible when shoulders are not available.
3. If traffic queues develop, sign vehicle V1 should be positioned upstream from the end of queue.
4. Vehicle-mounted sign panels shall be Type III, IV VII, VIII or IX retroreflective sheeting, black on white, black on orange, or black on fluorescent orange, with 6" minimum series D letters per Caltrans sign specifications.
5. Gross Vehicle Weight of shadow vehicle shall be a minimum of 20,000 pounds and shall be equipped with a truck-mounted attenuator. The sign panel shown shall be mounted on the rear of shadow vehicle V2. The message "LANE CLOSED" may be used in place of the "DO NOT PASS" message.
6. The sign panel shown shall be mounted on the front of sign vehicle V4, facing opposing traffic.
7. All vehicles shall be equipped with flashing or rotating amber lights.
8. Sign vehicle V4 will not be required when the work and vehicles V2 and V3 are 2' or more from the centerline of the highway during the work or application operations.
9. All vehicles used for lane closures shall be equipped with two-way radios and the vehicle operators shall maintain communication during the work or application operation.
10. When multiple work vehicles are used in close proximity to each other, only one shadow vehicle is required and spacing between work vehicles shall be minimized in order to deter traffic from entering the closed lane.

STATE OF CALIFORNIA
DEPARTMENT OF TRANSPORTATION

TRAFFIC CONTROL SYSTEM FOR MOVING LANE CLOSURE ON TWO LANE HIGHWAYS

NO SCALE

TCS-3

STATE OF CALIFORNIA - DEPARTMENT OF TRANSPORTATION
Caltrans
FUNCTIONAL SUPERVISOR
CALCULATED-DESIGNED BY
CHECKED BY
REVISED BY
DATE REVISED

LAST REVISION 00-00-00
DATE PLOTTED => 10-DEC-2012
TIME PLOTTED => 09:45

Dist	COUNTY	ROUTE	POST MILES TOTAL PROJECT	SHEET No.	TOTAL SHEETS
03	But	191	0.2/11.4	19	26

REGISTERED CIVIL ENGINEER

April 20, 2012
PLANS APPROVAL DATE

REGISTERED PROFESSIONAL ENGINEER
Roberta L. McLaughlin
No. C40375
Exp. 3-31-13
CIVIL
STATE OF CALIFORNIA

THE STATE OF CALIFORNIA OR ITS OFFICERS OR AGENTS SHALL NOT BE RESPONSIBLE FOR THE ACCURACY OR COMPLETENESS OF SCANNED COPIES OF THIS PLAN SHEET.

TO ACCOMPANY PLANS DATED 2-25-13

2010 REVISED STANDARD PLAN RSP A24A

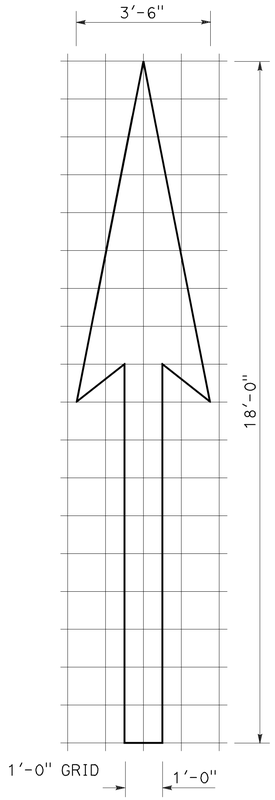

A=25 ft^2

TYPE I 18'-0" ARROW

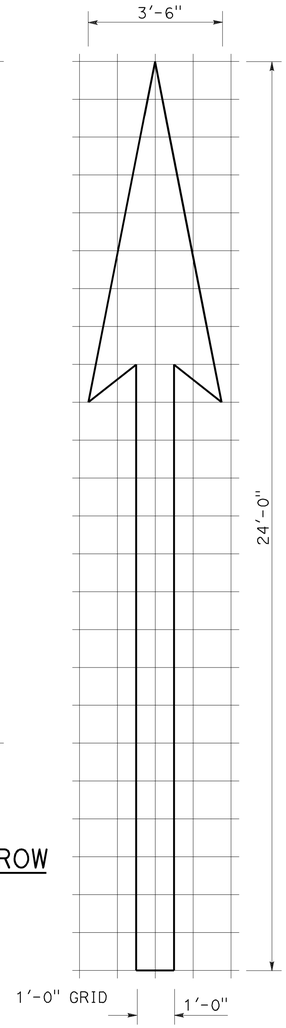

A=31 ft^2

TYPE I 24'-0" ARROW

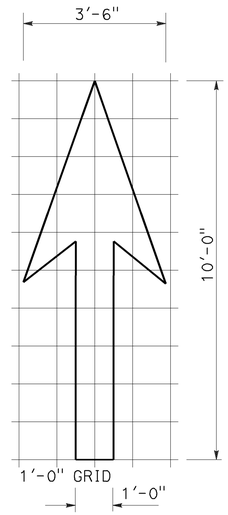

A=14 ft^2

TYPE I 10'-0" ARROW

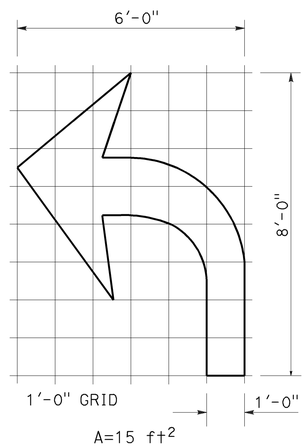

A=15 ft^2

TYPE IV (L) ARROW

(For Type IV (R) arrow, use mirror image)

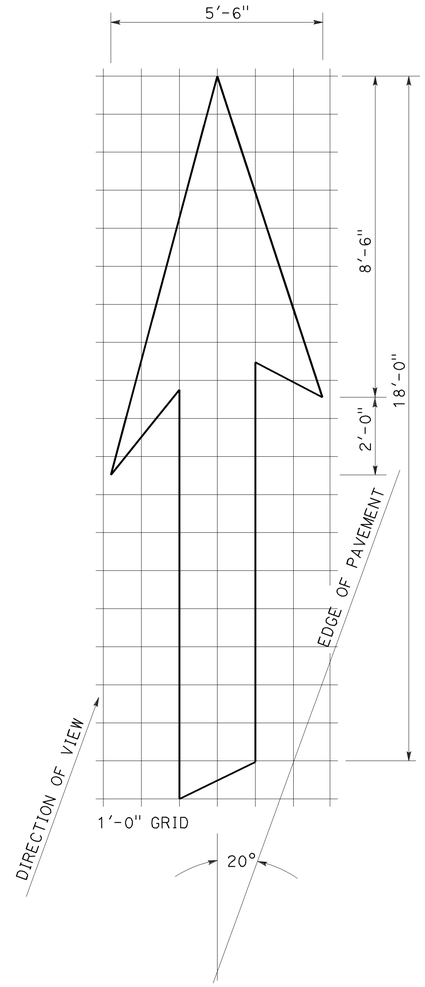

A=42 ft^2

TYPE VI ARROW

Right lane drop arrow
(For left lane, use mirror image)

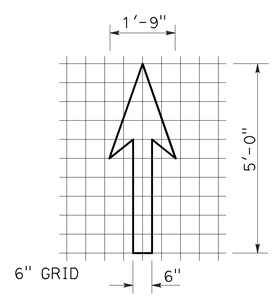

A=3.5 ft^2

BIKE LANE ARROW

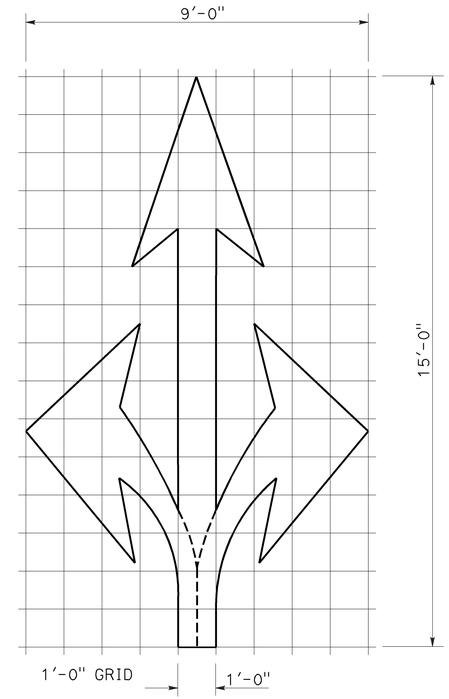

A=36 ft^2

TYPE VIII ARROW

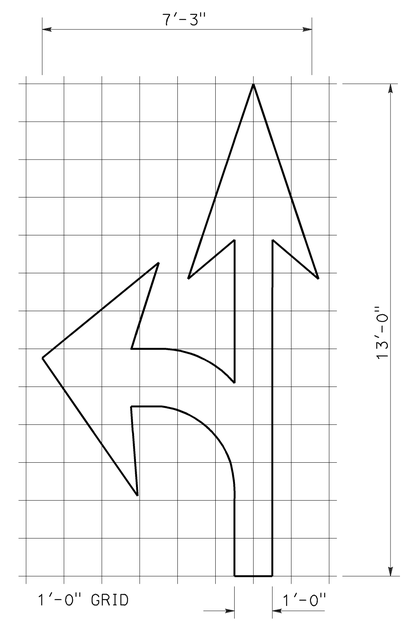

A=27 ft^2

TYPE VII (L) ARROW

(For Type VII (R) arrow, use mirror image)

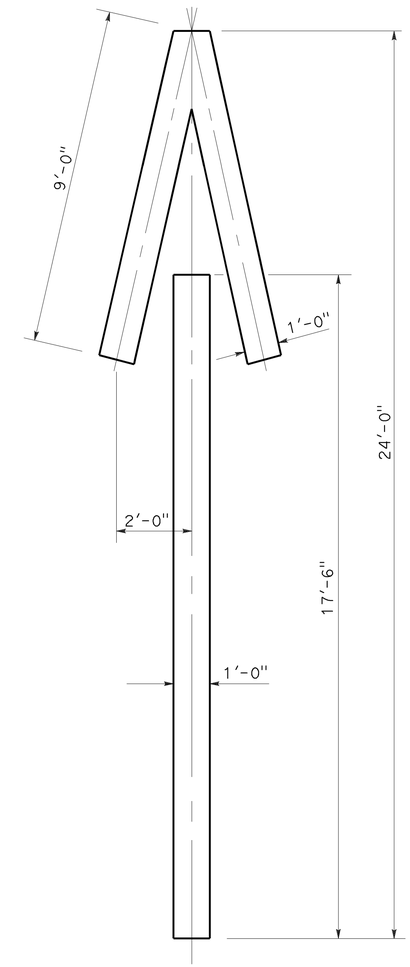

A=33 ft^2

TYPE V ARROW

NOTE:
Minor variations in dimensions may be accepted by the Engineer.

STATE OF CALIFORNIA
DEPARTMENT OF TRANSPORTATION

PAVEMENT MARKINGS ARROWS

NO SCALE

RSP A24A DATED APRIL 20, 2012 SUPERSEDES STANDARD PLAN A24A DATED MAY 20, 2011 - PAGE 13 OF THE STANDARD PLANS BOOK DATED 2010.

REVISED STANDARD PLAN RSP A24A

3-14-12

Dist	COUNTY	ROUTE	POST MILES TOTAL PROJECT	SHEET No.	TOTAL SHEETS
03	But	191	0.2/11.4	20	26

REGISTERED CIVIL ENGINEER

October 19, 2012
PLANS APPROVAL DATE

REGISTERED PROFESSIONAL ENGINEER
Roberta L. McLaughlin
No. C40375
Exp. 3-31-13
CIVIL
STATE OF CALIFORNIA

THE STATE OF CALIFORNIA OR ITS OFFICERS OR AGENTS SHALL NOT BE RESPONSIBLE FOR THE ACCURACY OR COMPLETENESS OF SCANNED COPIES OF THIS PLAN SHEET.

NOTE: TO ACCOMPANY PLANS DATED 2-25-13

Minor variations in dimensions may be accepted by the Engineer.

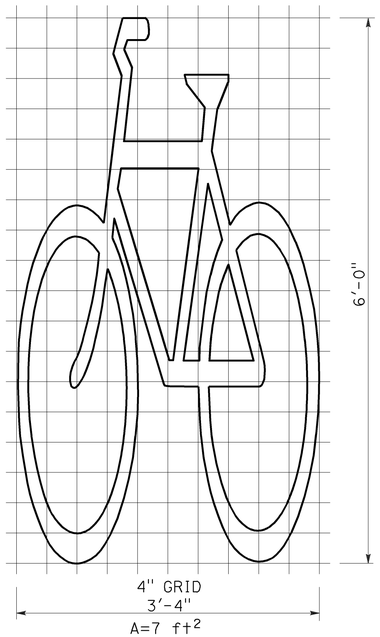

BIKE LANE SYMBOL WITHOUT PERSON

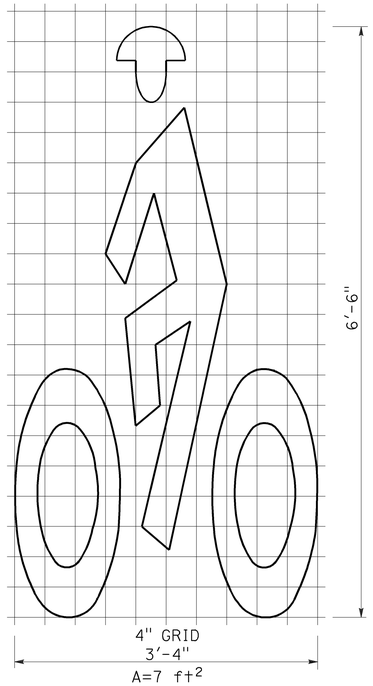

BIKE LANE SYMBOL WITH PERSON

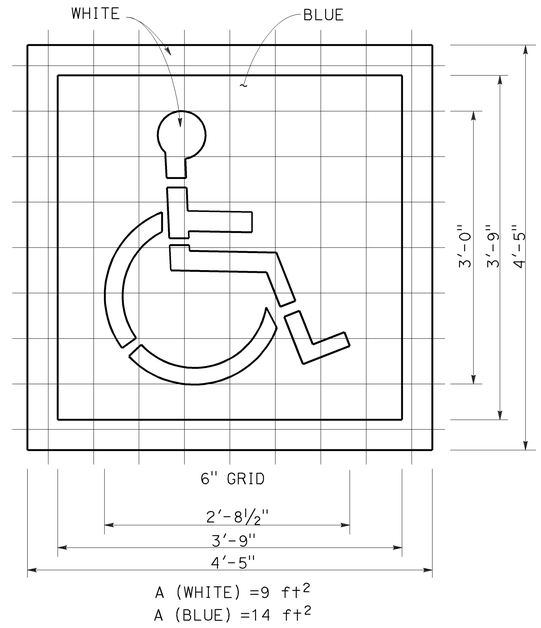

INTERNATIONAL SYMBOL OF ACCESSIBILITY (ISA) MARKING

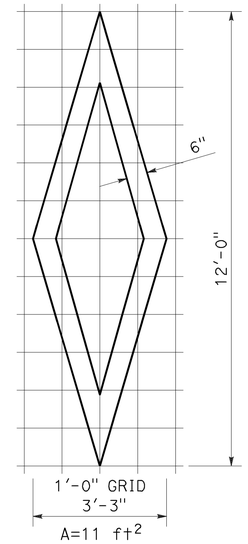

DIAMOND SYMBOL

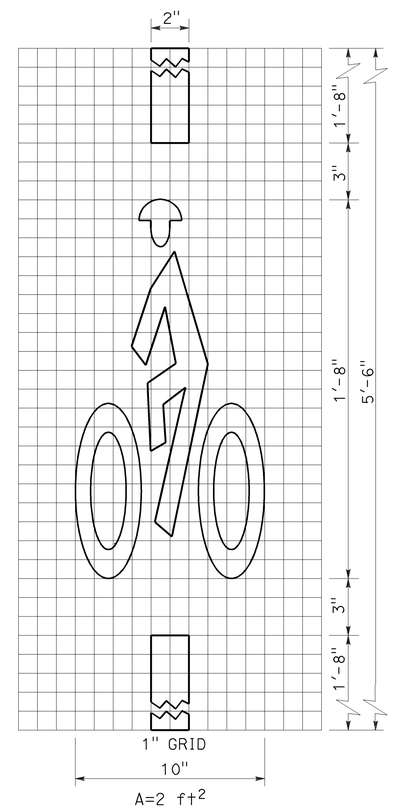

BICYCLE LOOP DETECTOR SYMBOL

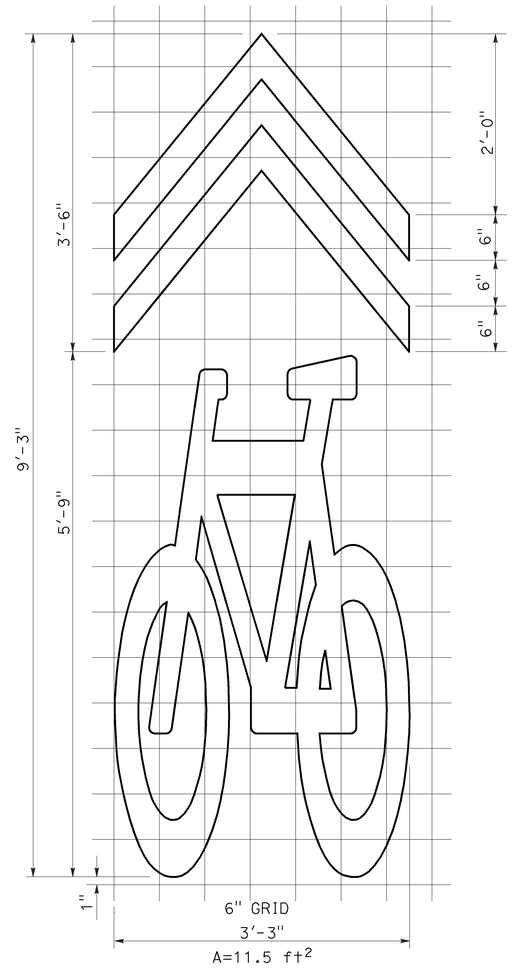

SHARED ROADWAY BICYCLE MARKING

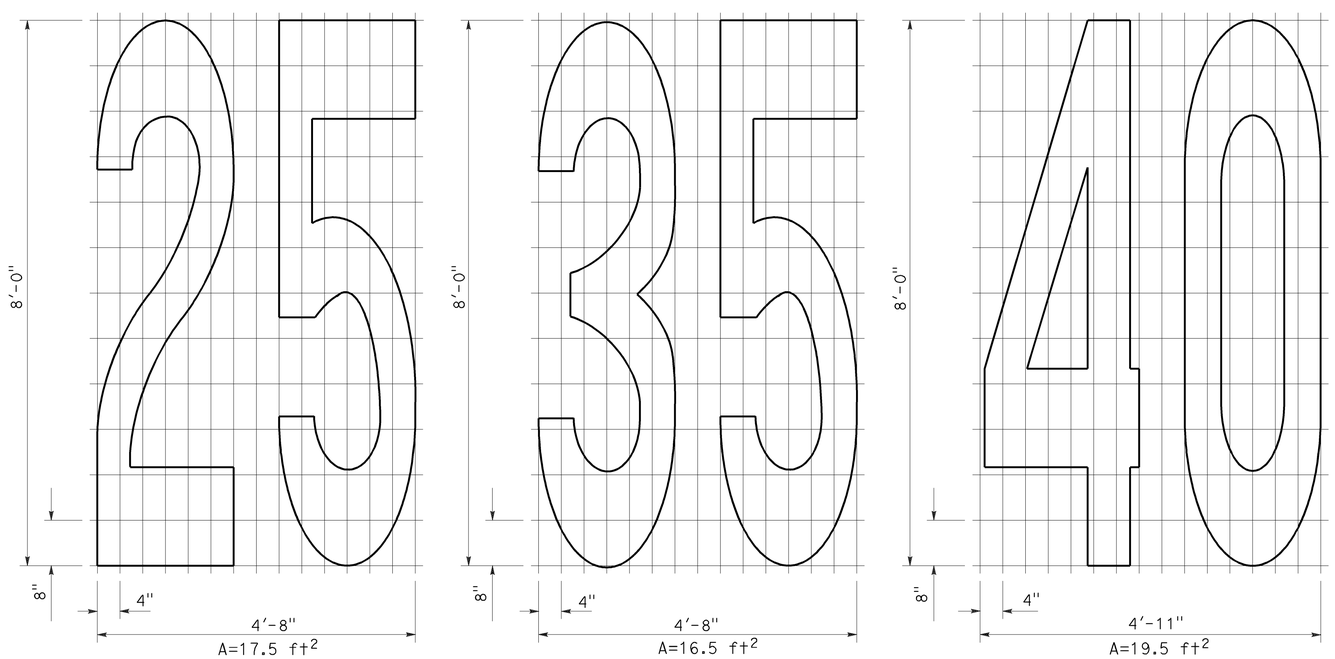

NUMERALS

STATE OF CALIFORNIA
DEPARTMENT OF TRANSPORTATION

PAVEMENT MARKINGS SYMBOLS AND NUMERALS

NO SCALE

RSP A24C DATED OCTOBER 19, 2012 SUPERSEDES STANDARD PLAN A24C DATED MAY 20, 2011 - PAGE 15 OF THE STANDARD PLANS BOOK DATED 2010.

REVISED STANDARD PLAN RSP A24C

2010 REVISED STANDARD PLAN RSP A24C

6-28-12

Dist	COUNTY	ROUTE	POST MILES TOTAL PROJECT	SHEET No.	TOTAL SHEETS
03	But	191	0.2/11.4	21	26

REGISTERED CIVIL ENGINEER

July 20, 2012
PLANS APPROVAL DATE

REGISTERED PROFESSIONAL ENGINEER
Roberta L. McLaughlin
No. C40375
Exp. 3-31-13
CIVIL
STATE OF CALIFORNIA

THE STATE OF CALIFORNIA OR ITS OFFICERS OR AGENTS SHALL NOT BE RESPONSIBLE FOR THE ACCURACY OR COMPLETENESS OF SCANNED COPIES OF THIS PLAN SHEET.

TO ACCOMPANY PLANS DATED 2-25-13

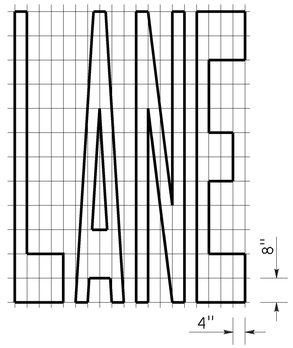

A=24 ft²

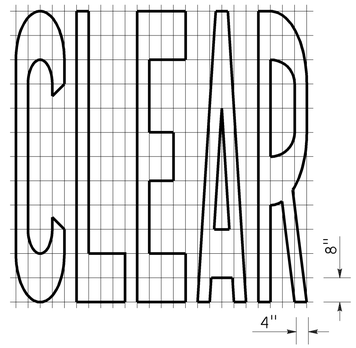

A=27 ft²

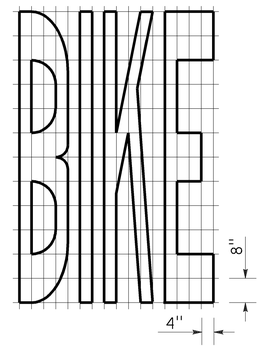

A=21 ft²

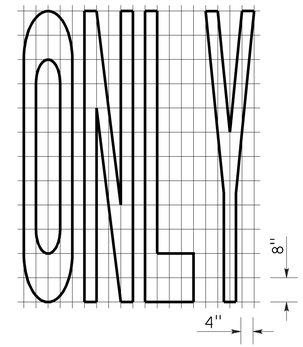

A=22 ft²

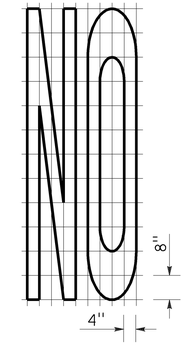

A=14 ft²

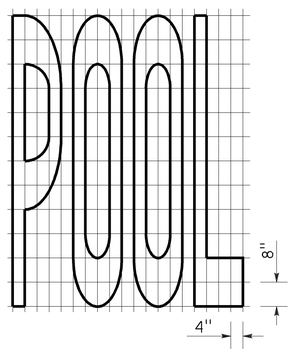

A=23 ft²

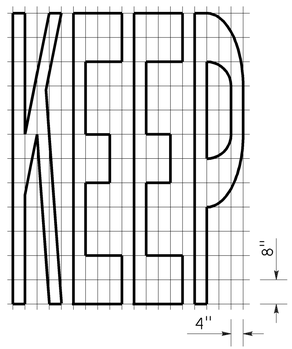

A=24 ft²

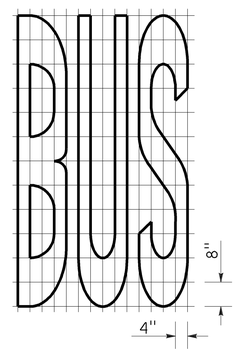

A=20 ft²

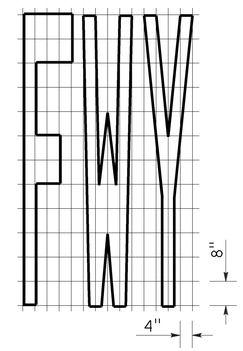

A=16 ft²

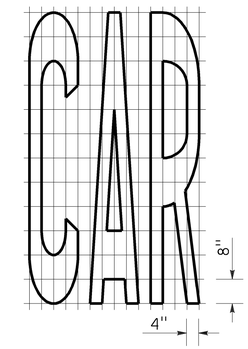

A=17 ft²

WORD MARKINGS			
ITEM	ft²	ITEM	ft²
LANE	24	NO	14
POOL	23	BIKE	21
CAR	17	BUS	20
CLEAR	27	ONLY	22
KEEP	24	FWY	16

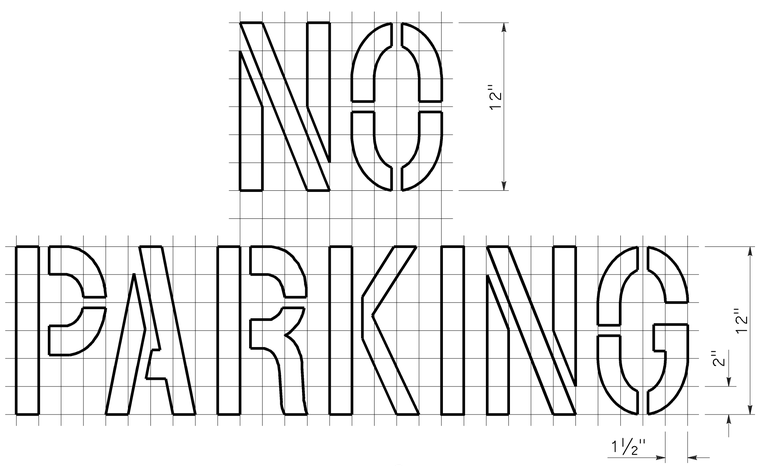

A=2 ft²
See Notes 6 and 7

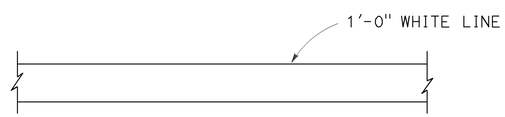

LIMIT LINE (STOP LINE)

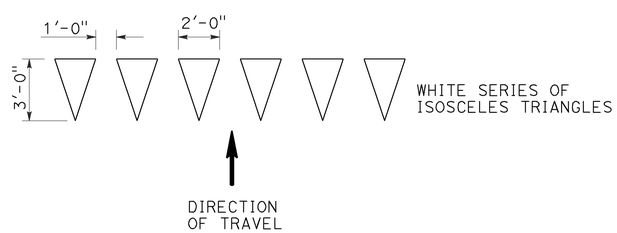

YIELD LINE

NOTES:

1. If a message consists of more than one word, it should read "UP", i.e., the first word should be nearest the driver.
2. The space between words should be at least four times the height of the characters for low speed roads, but not more than ten times the height of the characters. The space may be reduced appropriately where there is limited space because of local conditions.
3. Minor variations in dimensions may be accepted by the Engineer.
4. Portions of a letter, number or symbol may be separated by connecting segments not to exceed 2" in width.
5. The words "NO PARKING" pavement marking is to be used for parking facilities. For typical locations of markings, see Standard Plans A90A and A90B.
6. The words "NO PARKING", shall be painted in white letters no less than 1'-0" high on a contrasting background and located so that it is visible to traffic enforcement officials.

STATE OF CALIFORNIA
DEPARTMENT OF TRANSPORTATION

PAVEMENT MARKINGS WORDS, LIMIT AND YIELD LINES

NO SCALE

RSP A24E DATED JULY 20, 2012 SUPERSEDES STANDARD PLAN A24E
DATED MAY 20, 2011 - PAGE 17 OF THE STANDARD PLANS BOOK DATED 2010.

REVISED STANDARD PLAN RSP A24E

2010 REVISED STANDARD PLAN RSP A24E

Dist	COUNTY	ROUTE	POST MILES TOTAL PROJECT	SHEET No.	TOTAL SHEETS
03	But	191	0.2/11.4	22	26

REGISTERED CIVIL ENGINEER

July 20, 2012
PLANS APPROVAL DATE

REGISTERED PROFESSIONAL ENGINEER
Roberta L. McLaughlin
No. C40375
Exp. 3-31-13
CIVIL
STATE OF CALIFORNIA

THE STATE OF CALIFORNIA OR ITS OFFICERS OR AGENTS SHALL NOT BE RESPONSIBLE FOR THE ACCURACY OR COMPLETENESS OF SCANNED COPIES OF THIS PLAN SHEET.

TO ACCOMPANY PLANS DATED 2-25-13

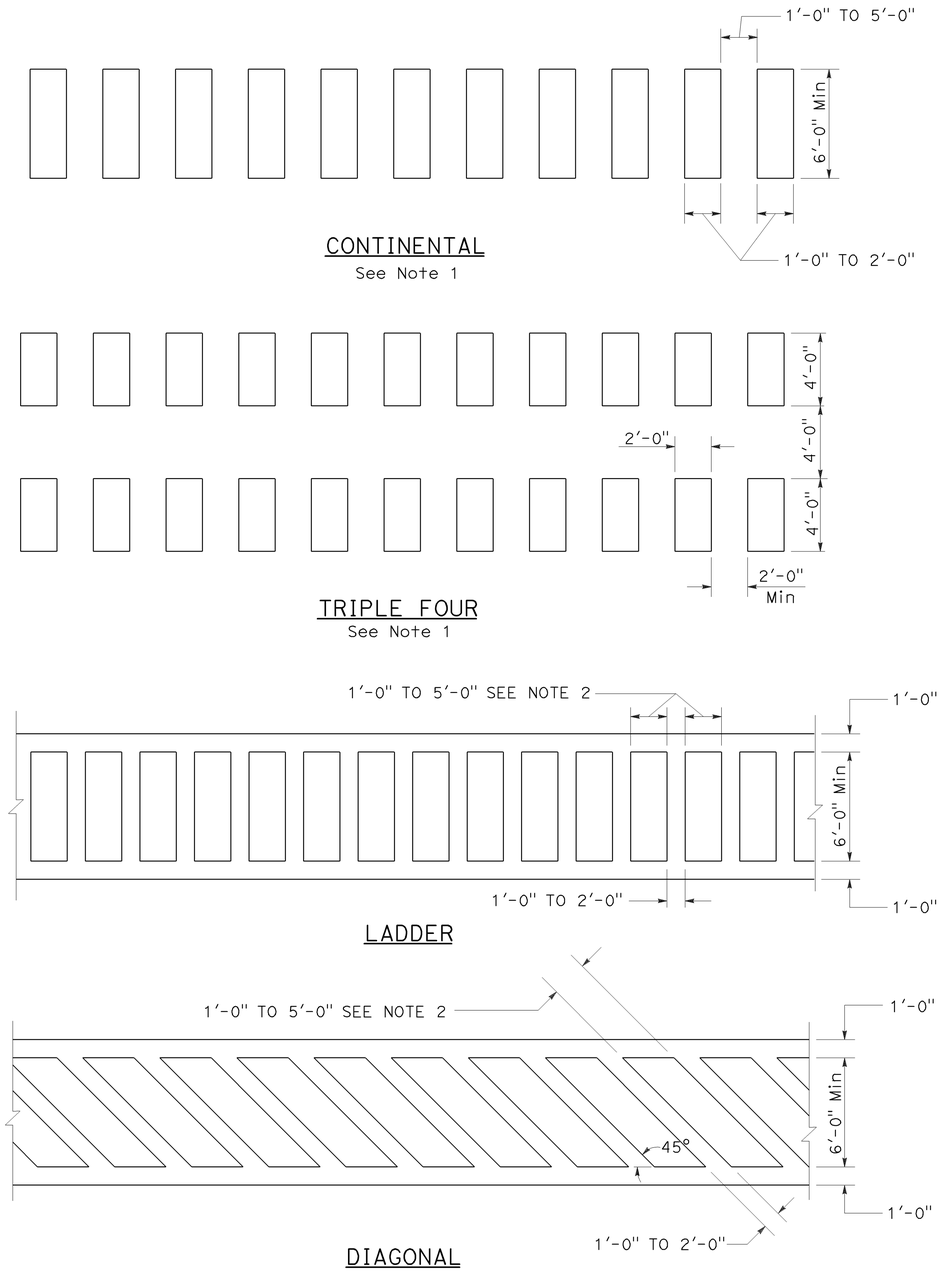

HIGHER VISIBILITY CROSSWALKS

NOTES:

1. Spaces between markings should be placed in wheel tracks of each lane.
2. Spacings not to exceed 2.5 times width of longitudinal line.
3. All crosswalk markings must be white except for those near schools must be yellow.

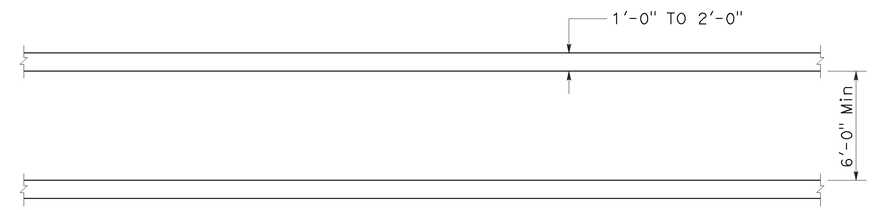

BASIC

STATE OF CALIFORNIA
DEPARTMENT OF TRANSPORTATION

PAVEMENT MARKINGS CROSSWALKS

NO SCALE

RSP A24F DATED JULY 20, 2012 SUPPLEMENTS THE STANDARD PLANS BOOK DATED 2010.

REVISED STANDARD PLAN RSP A24F

2010 REVISED STANDARD PLAN RSP A24F

6-28-12

DIST	COUNTY	ROUTE	POST MILES TOTAL PROJECT	SHEET No.	TOTAL SHEETS
03	But	191	0.2/11.4	23	26

REGISTERED CIVIL ENGINEER

January 20, 2012
PLANS APPROVAL DATE

REGISTERED PROFESSIONAL ENGINEER
Cornelis M. Hakim
No. C55610
Exp. 12-31-12
CIVIL
STATE OF CALIFORNIA

THE STATE OF CALIFORNIA OR ITS OFFICERS OR AGENTS SHALL NOT BE RESPONSIBLE FOR THE ACCURACY OR COMPLETENESS OF SCANNED COPIES OF THIS PLAN SHEET.

TO ACCOMPANY PLANS DATED 2-25-13

2010 REVISED STANDARD PLAN RSP P74

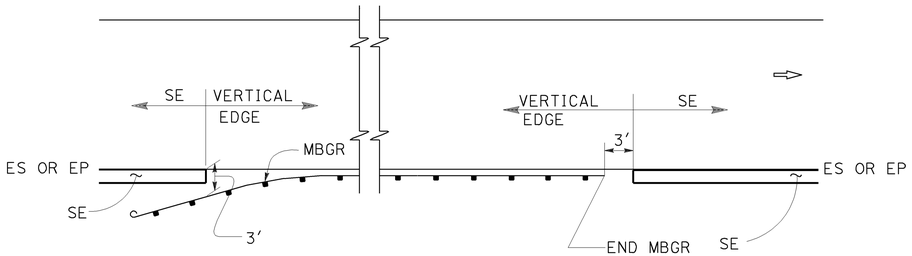

MBGR

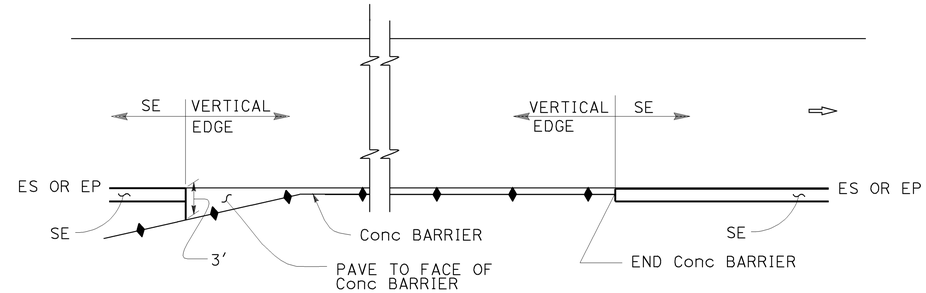

CONCRETE BARRIER

ABBREVIATIONS:

SE SAFETY EDGE

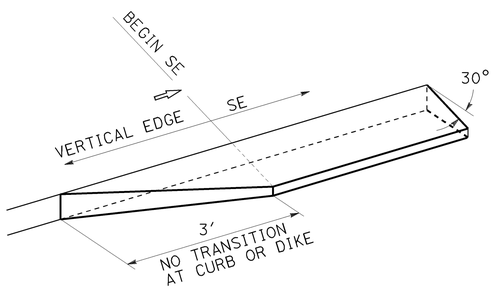

TRANSITION DETAIL FOR CONCRETE ONLY

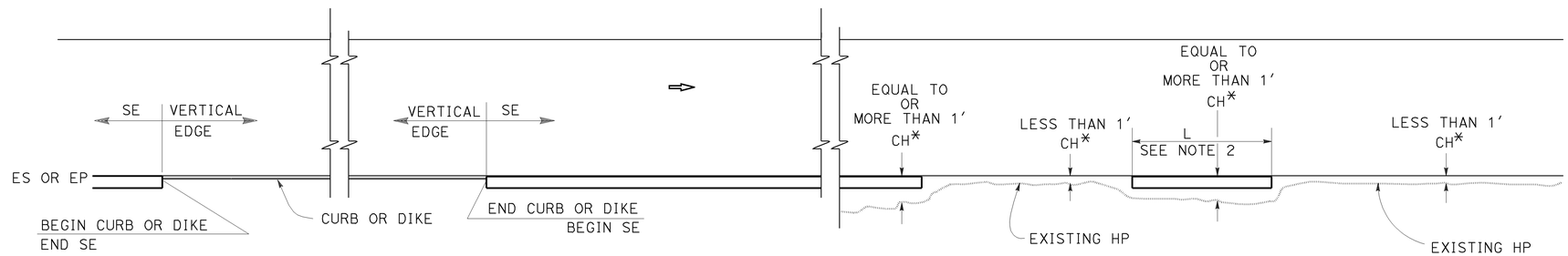

CURB OR DIKE

NARROW SIDE SLOPE

* CH = Distance from ES or EP to existing HP.

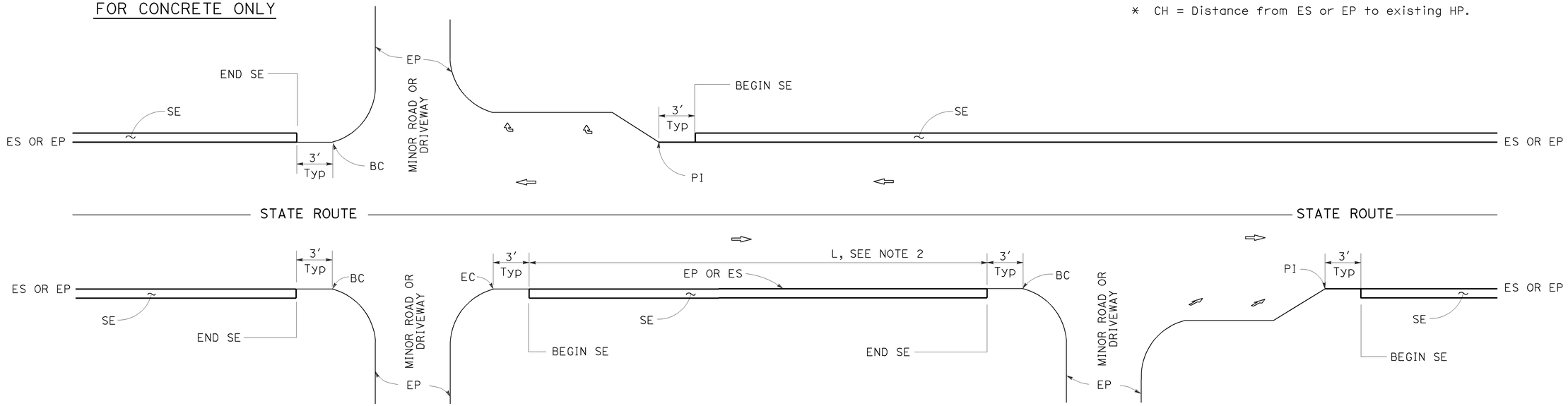

INTERSECTION

MINOR ROADWAY OR DRIVEWAY

DRIVEWAY AND INTERSECTION

NOTES:

1. For details not shown, see Revised Standard Plans RSP P75 and RSP P76.
2. Safety edge is optional when L is less than 30′.

STATE OF CALIFORNIA
DEPARTMENT OF TRANSPORTATION

PAVEMENT EDGE TREATMENTS

NO SCALE

RSP P74 DATED JANUARY 20, 2012 SUPPLEMENTS THE STANDARD PLANS BOOK DATED 2010.

REVISED STANDARD PLAN RSP P74

01-05-12

DIST	COUNTY	ROUTE	POST MILES TOTAL PROJECT	SHEET No.	TOTAL SHEETS
03	But	191	0.2/11.4	24	26

REGISTERED CIVIL ENGINEER

January 20, 2012
PLANS APPROVAL DATE

REGISTERED PROFESSIONAL ENGINEER
Cornelis M. Hakim
No. C55610
Exp. 12-31-12
CIVIL
STATE OF CALIFORNIA

THE STATE OF CALIFORNIA OR ITS OFFICERS OR AGENTS SHALL NOT BE RESPONSIBLE FOR THE ACCURACY OR COMPLETENESS OF SCANNED COPIES OF THIS PLAN SHEET.

TO ACCOMPANY PLANS DATED 2-25-13

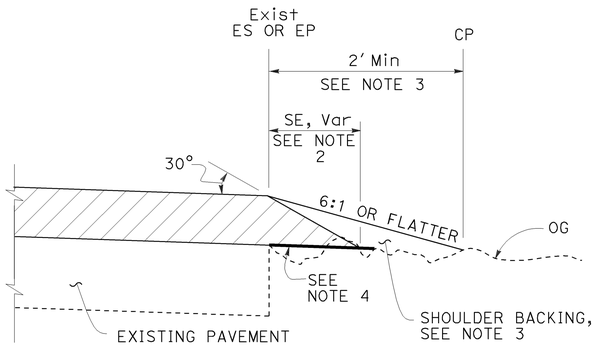

CASE A
Safety Edge

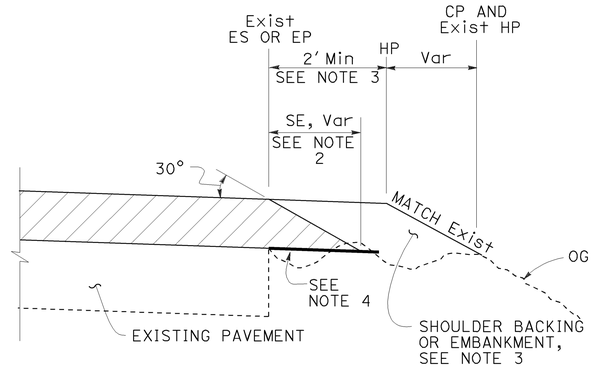

CASE B
Safety Edge

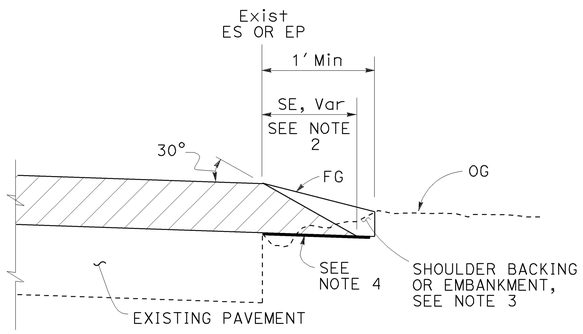

CASE C
Safety Edge

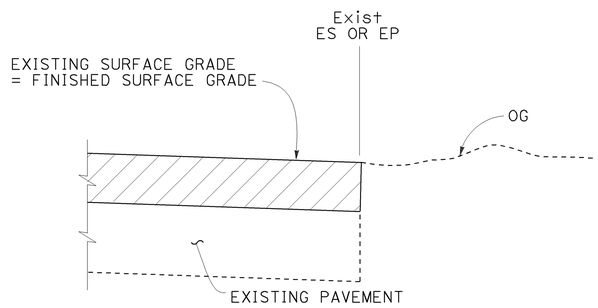

CASE D
Vertical Edge

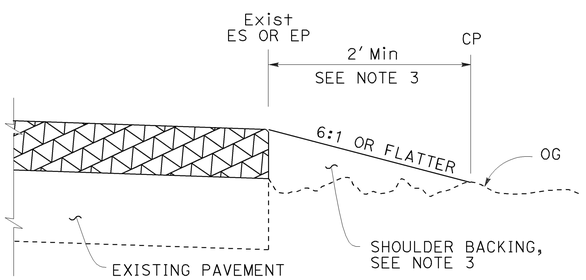

CASE E
Vertical Edge

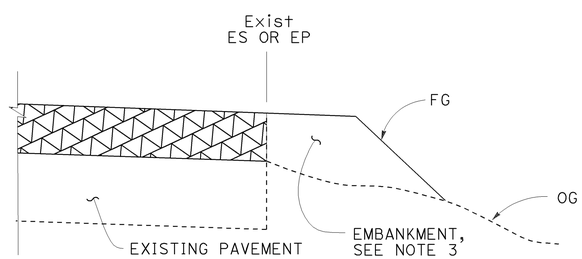

CASE F
Vertical Edge
* See Table A and Revised Std Plan RSP P74

LEGEND:

- HMA OVERLAY
- HMA OR CONCRETE OVERLAY
- CONCRETE OVERLAY

ABBREVIATIONS:

SE SAFETY EDGE
TT TOTAL THICKNESS OF SE

TABLE A
EDGE TREATMENT FOR VARIOUS OVERLAY THICKNESS AND CONDITIONS

	OVERLAY THICKNESS	
FIELD CONDITION	LESS THAN 0.15'	0.15' OR MORE
Exist SLOPE 6:1 OR FLATTER	CASE E	CASE A
Exist SLOPE 3:1 TO 6:1	CASE E	CASE B
Exist SLOPE STEEPER THAN 3:1	CASE F	CASE F
CUT SECTION (REPLACE, COLD PLANE, MILL PAVEMENT)	CASE D	CASE C

ADDITIONAL HMA OR CONCRETE QUANTITIES FOR SE/SIDE/MILE

TYPICAL CROSS SECTION	TT	TOTAL ADDITIONAL MATERIAL FOR SE/SIDE/MILE		
		HMA (TON)	CONCRETE (CY)*	CONCRETE (CY)**
TT	0.15'	NA	NA	NA
	0.20'	13.7	NA	NA
	0.30'	30.9	NA	NA
	0.40'	54.9	NA	NA
	0.45'	69.4	NA	NA
TT 0.43'	0.50'	84.2	NA	NA
	0.60'	113.9	NA	NA
	0.70'	143.6	70.9	94.2
	0.80'	173.3	85.6	112.2
	0.90'	203.0	100.3	130.2
	1.00'	232.7	114.9	148.2
	1.10'	262.4	129.6	166.2
	1.20'	292.1	144.3	184.2

* For Detail "A"
** For Optional Detail "A"

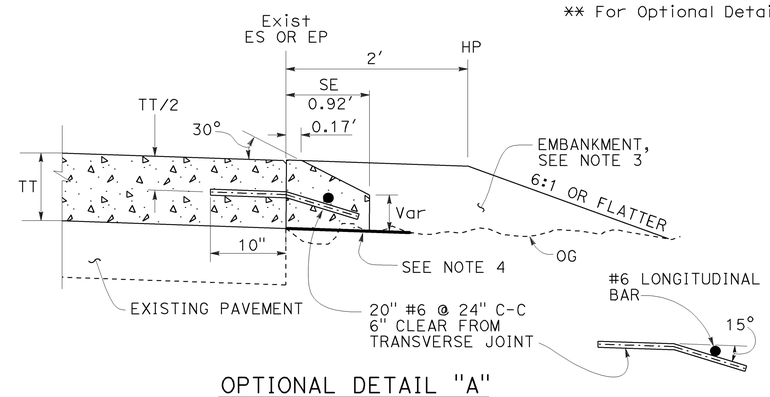

OPTIONAL DETAIL "A"
For concrete overlay
See Note 5

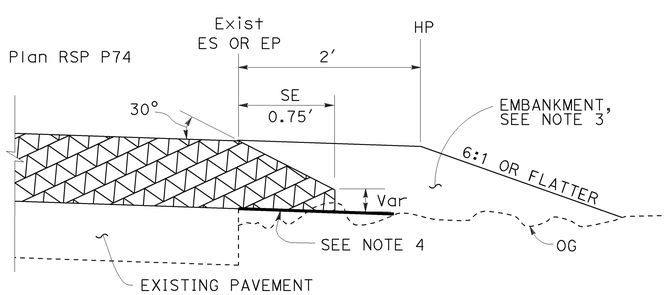

DETAIL "A"
For HMA overlay thickness more than 0.43' or concrete overlay

NOTES:

1. For limits of safety edge and vertical edge treatments, see Revised Standard Plan RSP P74.
2. Details shown for HMA overlay thickness less than 0.43'. See Detail "A" for HMA overlay thickness more than 0.43' or concrete overlay.
3. For locations and limits of shoulder backing or embankment see project plans.
4. Grade existing ground to place safety edge. 1' minimum width
5. Safety edge transverse joint must match overlay transverse joint. End of #6 longitudinal bar must be 2" ±½" clear from transverse joint.
6. Safety edge is not needed in the area of MBGR, barrier, right turn lane and acceleration lane. See Revised Standard Plan RSP P74.

STATE OF CALIFORNIA
DEPARTMENT OF TRANSPORTATION

PAVEMENT EDGE TREATMENTS-OVERLAYS

NO SCALE

RSP P75 DATED JANUARY 20, 2012 SUPPLEMENTS THE STANDARD PLANS BOOK DATED 2010.

REVISED STANDARD PLAN RSP P75

2010 REVISED STANDARD PLAN RSP P75

01-09-12

DIST	COUNTY	ROUTE	POST MILES TOTAL PROJECT	SHEET NO.	TOTAL SHEETS
03	But	191	0.2/11.4	25	26

REGISTERED ELECTRICAL ENGINEER

January 20, 2012
PLANS APPROVAL DATE

REGISTERED PROFESSIONAL ENGINEER
Jeffery G. McRae
No. E14512
Exp. 6-30-12
ELECTRICAL
STATE OF CALIFORNIA

THE STATE OF CALIFORNIA OR ITS OFFICERS OR AGENTS SHALL NOT BE RESPONSIBLE FOR THE ACCURACY OR COMPLETENESS OF SCANNED COPIES OF THIS PLAN SHEET.

TO ACCOMPANY PLANS DATED 2-25-13

2010 REVISED STANDARD PLAN RSP ES-8A

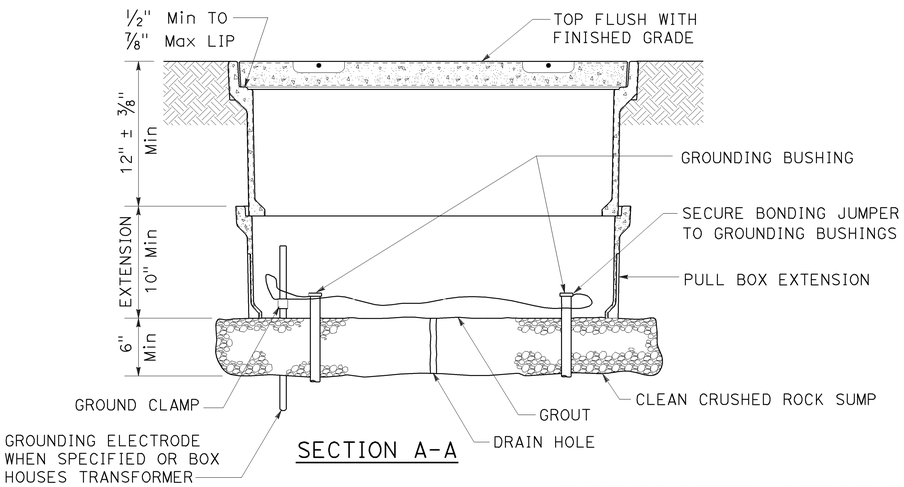

SECTION A-A

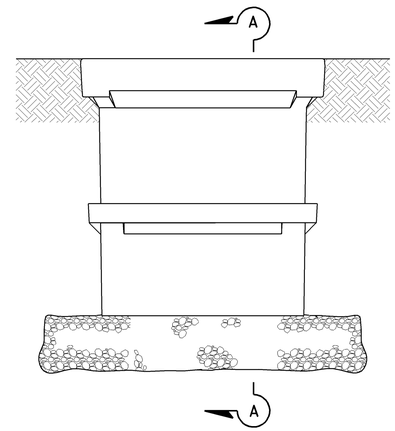

SIDE VIEW

INSTALLATION DETAILS

DETAIL A

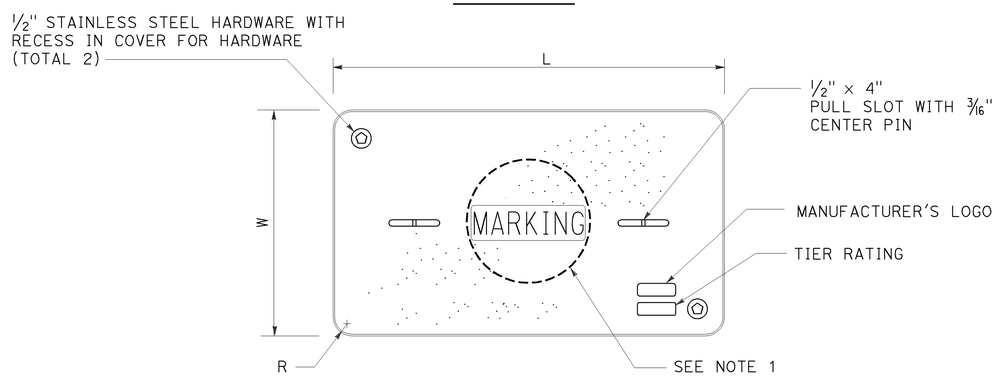

COVER TOP VIEW

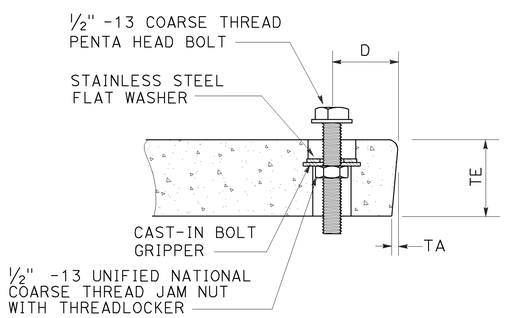

TYPICAL COVER CAPTIVE BOLT

OR SIMILAR

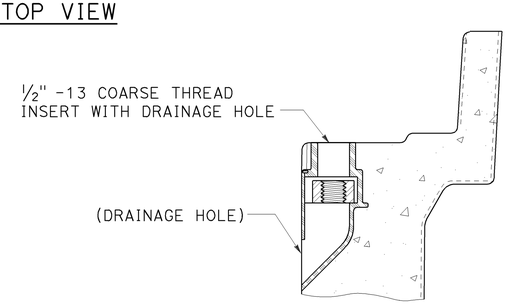

TYPICAL THREADED INSERT

OR SIMILAR

DIMENSION TABLE										
PULL BOX	PULL BOX			COVER						
	MINIMUM DEPTH BOX	MINIMUM DEPTH EXTENSION	MAXIMUM WEIGHT	L	W	R	TE	TA	D	MAXIMUM WEIGHT
No. 3½	12"	N/A	40 lb	1' - 3⅜"	10⅛"	1⅜"	2"	⅛"	1¾"	30 lb
No. 5	12"	10"	55 lb	1' - 11¼"	1' - 1¾"	1⅜"	2"	⅛"	1¾"	60 lb
No. 6	12"	10"	70 lb	2' - 6½"	1' - 5½"	1⅜"	2"	⅛"	2"	85 lb

NOTES ON PULL BOXES:

1. Pull box covers must be marked as follows: "SERVICE" Service circuits between service point and service disconnect; "SPRINKLER-CONTROL" sprinkler control circuits, 50 V or less; "CALTRANS" on all pull boxes, except pull boxes marked "SPRINKLER-CONTROL"; and "TELEPHONE" Telephone service;

   A) No. 3½ pull box.
      1) "SIGNAL" - Traffic signal circuits with or without street or sign lighting circuits.
      2) "ST LIGHTING" - Street or sign lighting circuits where voltage is under 600 V.

   B) No. 5, 6, 9 or 9A pull box.
      1) "TRAFFIC SIGNAL" - Traffic signal circuits with or without street or sign lighting circuits.
      2) "STREET LIGHTING" - Street or sign lighting circuits where voltage is under 600 V.
      3) "STREET LIGHTING-HIGH VOLTAGE" - Street or sign lighting circuits where voltage is above 600 V.
      4) "IRRIGATION" - Circuits to irrigation controller 120 V or more.
      5) "RAMP METER" - Ramp meter circuits.
      6) "COUNT STATION" - Count or speed monitor circuits.
      7) "COMMUNICATIONS" - Communication circuits.
      8) "TOS COMMUNICATIONS" - TOS communication line.
      9) "TOS POWER" - TOS power.
      10) "TDC POWER" - Telephone demarcation cabinet power.
      11) "CCTV" - Closed circuit television circuits.
      12) "TMS" - Traffic monitoring station circuits.
      13) "CMS" - Changeable message sign circuits.
      14) "HAR" - Highway advisory radio circuits.

2. The nominal dimensions of the opening in which the cover sets must be the same as the cover dimensions (L and W) plus ⅛" or greater.
3. Covers and boxes must be interchangeable with California Standard. When interchanged with a standard, the top surfaces must be flush within ⅛". Top outside radius of covers and pull boxes must have a ⅛" radius.
4. Pull box extension may be another pull box as long as the bottom edge of the pull box can fit into the cover opening.

STATE OF CALIFORNIA
DEPARTMENT OF TRANSPORTATION

ELECTRICAL SYSTEMS (PULL BOX)

NO SCALE

RSP ES-8A DATED JANUARY 20, 2012 SUPPLEMENTS THE STANDARD PLANS BOOK DATED 2010.

REVISED STANDARD PLAN RSP ES-8A

DIST	COUNTY	ROUTE	POST MILES TOTAL PROJECT	SHEET NO.	TOTAL SHEETS
03	But	191	0.2/11.4	26	26

REGISTERED ELECTRICAL ENGINEER

January 20, 2012
PLANS APPROVAL DATE

REGISTERED PROFESSIONAL ENGINEER
Jeffery G. McRae
No. E14512
Exp. 6-30-12
ELECTRICAL
STATE OF CALIFORNIA

THE STATE OF CALIFORNIA OR ITS OFFICERS OR AGENTS SHALL NOT BE RESPONSIBLE FOR THE ACCURACY OR COMPLETENESS OF SCANNED COPIES OF THIS PLAN SHEET.

TO ACCOMPANY PLANS DATED 2-25-13

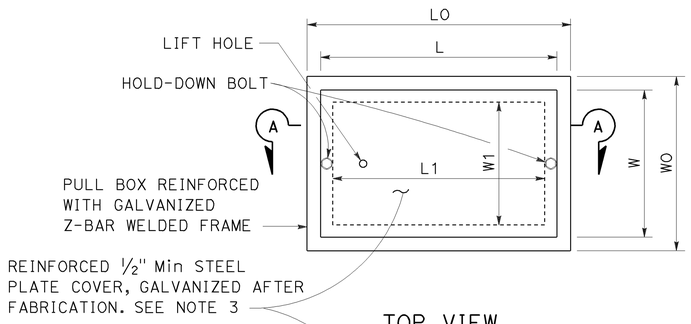

TOP VIEW

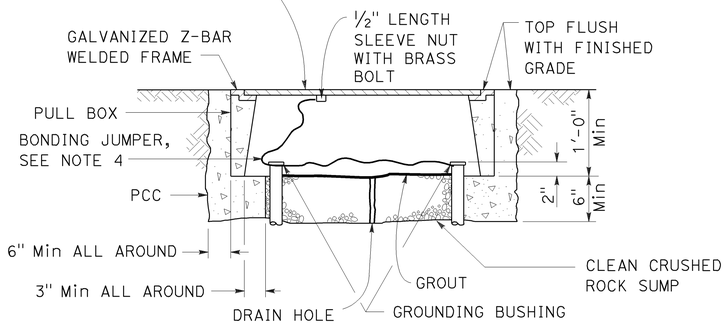

SECTION A-A

No. 3½(T), No. 5(T) AND No. 6(T) TRAFFIC PULL BOX

NOTES ON PULL BOXES:

1. Traffic pull box shall be provided with steel cover and special concrete footing. Steel cover shall have embossed non-skid pattern.
2. Steel reinforcing shall be as regularly used in the standard products of the respective manufacturer.
3. Pull box covers must be marked as follows: "SERVICE" Service circuits between service point and service disconnect; "SPRINKLER-CONTROL" Sprinkler control circuits, 50 V or less; "CALTRANS" On all pull boxes, except pull boxes marked "SPRINKLER-CONTROL"; and "TELEPHONE" Telephone service.
   A) No. 3½(T) pull box.
      1) "SIGNAL" - Traffic signal circuits with or without street or sign lighting circuits.
      2) "ST LIGHTING" - Street or sign lighting circuits where voltage is under 600 V.
   B) No. 5(T) or 6(T) pull box.
      1) "TRAFFIC SIGNAL" - Traffic signal circuits with or without street or sign lighting circuits.
      2) "STREET LIGHTING" - Street or sign lighting circuits where voltage is under 600 V.
      3) "STREET LIGHTING-HIGH VOLTAGE" - Street or sign lighting circuits where voltage is above 600 V.
      4) "IRRIGATION" - Circuits to irrigation controller 120 V or more.
      5) "RAMP METER" - Ramp meter circuits.
      6) "COUNT STATION" - Count or speed monitor circuits.
      7) "COMMUNICATION" - Communication circuits.
      8) "TOS COMMUNICATIONS" - TOS communications line.
      9) "TOS POWER" - TOS power.
      10) "TDC POWER" - Telephone demarcation cabinet power.
      11) "CCTV" - Closed circuit television circuits.
      12) "TMS" - Traffic monitoring station circuits.
      13) "CMS" - Changeable message sign circuits.
      14) "HAR" - Highway advisory radio circuits.
4. Bonding jumper for metal covers shall be 3' long, minimum.
5. The nominal dimensions of the opening in which the cover sets must be the same as the cover dimensions except the length and width dimensions shall be ⅛" greater.
6. Covers and boxes must be interchangeable with California standard male and female gages. When interchanged with a standard male or female gage, the top surfaces must be flush within ⅛".

DIMENSION TABLE

PULL BOX	BOX						COVER				
	MINIMUM * THICKNESS	MINIMUM DEPTH BOX AND EXTENSION	WO	LO	L1	W1	L **	W **	R	EDGE THICKNESS	EDGE TAPER
No. 3½(T)	1½"	1'-0"	1'-5"± 1"	1'-8⅞"±	1'-2½"±	10⅝"± 1"	1'-8"±	1'-1¾"±	0"	½"	NONE
No. 5(T)	1¾"	1'-0"	1'-11½"± 1"	2'-5½"±	1'-7"±	1'-1"± 1"	2'-3"±	1'-4"±	0"	½"	NONE
No. 6(T)	2"	1'-0"	2'-6"± 1"	2'-11½"±	1'-11½"±	1'-5"± 1"	2'-9"±	1'-8"±	0"	½"	NONE

* EXCLUDING CONDUIT WEB ** TOP DIMENSION

STATE OF CALIFORNIA
DEPARTMENT OF TRANSPORTATION

ELECTRICAL SYSTEMS (TRAFFIC RATED PULL BOX)

NO SCALE

RSP ES-8B DATED JANUARY 20, 2012 SUPPLEMENTS THE STANDARD PLANS BOOK DATED 2010.

REVISED STANDARD PLAN RSP ES-8B

REVISED STANDARD PLAN RSP ES-8B