| Dist | COUNTY | ROUTE | POST MILES TOTAL PROJECT | SHEET No. | TOTAL SHEETS |
|---|---|---|---|---|---|
| 03 | Nev | 174 | 0.0/10.2 | 1 | 26 |

INDEX OF PLANS


| SHEET No. | DESCRIPTION |
|---|---|
| 1 | TITLE AND LOCATION MAP |
| 2 | TYPICAL CROSS SECTIONS |
| 3-6 | CONSTRUCTION DETAILS |
| 7-8 | CONSTRUCTION AREA SIGNS |
| 9-10 | PAVEMENT DELINEATION QUANTITIES |
| 11-13 | SUMMARY OF QUANTITIES |
| 14-16 | ELECTRICAL PLANS |
| 17-26 | REVISED AND NEW STANDARD PLANS |


THE STANDARD PLANS LIST APPLICABLE TO THIS CONTRACT IS INCLUDED IN THE NOTICE TO BIDDERS AND SPECIAL PROVISIONS BOOK.

STATE OF CALIFORNIA

# DEPARTMENT OF TRANSPORTATION

# PROJECT PLANS FOR CONSTRUCTION ON

# STATE HIGHWAY

## IN NEVADA COUNTY
## IN AND NEAR GRASS VALLEY
## FROM PLACER COUNTY LINE
## TO SOUTH AUBURN STREET

TO BE SUPPLEMENTED BY STANDARD PLANS DATED MAY 2006

LOCATION MAP

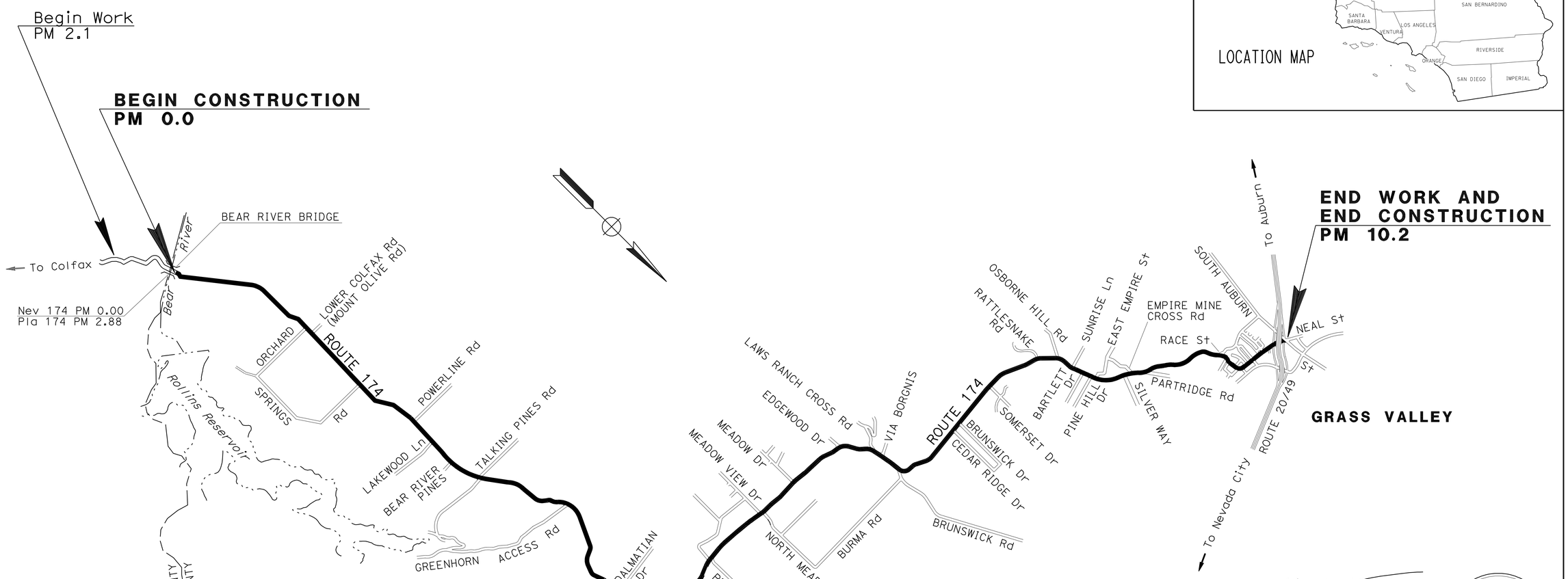


NO SCALE

THE CONTRACTOR SHALL POSSESS THE CLASS (OR CLASSES) OF LICENSE AS SPECIFIED IN THE "NOTICE TO BIDDERS."

PROJECT MANAGER: RONALD S. SYKES

DESIGN ENGINEER: RONALD S. SYKES

Charles Wooten 3-19-12
PROJECT ENGINEER DATE
REGISTERED CIVIL ENGINEER

March 26, 2012
PLANS APPROVAL DATE

REGISTERED PROFESSIONAL ENGINEER CHARLES T. WOOTEN No. 77905 Exp. 6-30-13 CIVIL STATE OF CALIFORNIA

*THE STATE OF CALIFORNIA OR ITS OFFICERS OR AGENTS SHALL NOT BE RESPONSIBLE FOR THE ACCURACY OR COMPLETENESS OF SCANNED COPIES OF THIS PLAN SHEET.*

| CONTRACT No. | 03-4M3104 |
|---|---|
| PROJECT ID | 0300020521 |

LAST REVISION 00-00-00 | DATE PLOTTED => 20-MAR-2012 | TIME PLOTTED => 14:41

| Dist | COUNTY | ROUTE | POST MILES TOTAL PROJECT | SHEET No. | TOTAL SHEETS |
|---|---|---|---|---|---|
| 03 | Nev | 174 | 0.0/10.2 | 2 | 26 |

Charles Wooten 3-19-12
REGISTERED CIVIL ENGINEER DATE

3-26-12
PLANS APPROVAL DATE

REGISTERED PROFESSIONAL ENGINEER
CHARLES T. WOOTEN
No. 77905
Exp. 6-30-13
CIVIL
STATE OF CALIFORNIA

*THE STATE OF CALIFORNIA OR ITS OFFICERS OR AGENTS SHALL NOT BE RESPONSIBLE FOR THE ACCURACY OR COMPLETENESS OF SCANNED COPIES OF THIS PLAN SHEET.*

## NOTES:

1. DIMENSIONS OF THE PAVEMENT STRUCTURES (STRUCTURAL SECTIONS) ARE SUBJECT TO TOLERANCES SPECIFIED IN THE STANDARD SPECIFICATIONS.
2. THE LIMITS OF OVERLAY AND COLD PLANE ARE EP TO EP, OR AS SHOWN ON THE CONSTRUCTION DETAILS SHEETS OR AS DIRECTED BY THE ENGINEER.
3. EXISTING UTILITY FACILITIES HAVE NOT BEEN PLOTTED ON THESE PLANS.

## ABBREVIATIONS:

LL - LANE LINE
HMA-A - HOT MIX ASPHALT (TYPE A)
HMA-BWC - HOT MIX ASPHALT (BONDED WEARING COURSE - GAP GRADED)
TWLTL - TWO WAY LEFT TURN LANE

1 — Exist
0.08' OGAC
0.40' AC
0.95' AB

2 — Exist
0.40' AC
0.95' AB

3 — 0.10' COLD PLANE AC Pvmt
0.10' HMA-BWC

4 — 0.10' HMA-BWC

5 — 0.25' COLD PLANE AC Pvmt
0.25' HMA-A

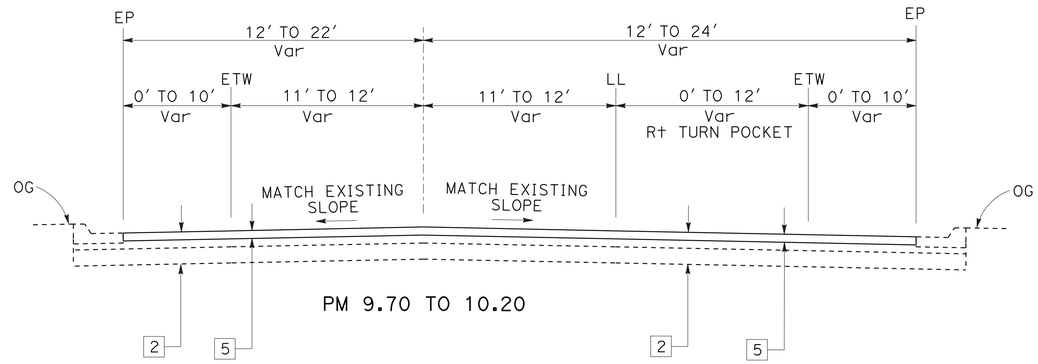


PM 9.70 TO 10.20

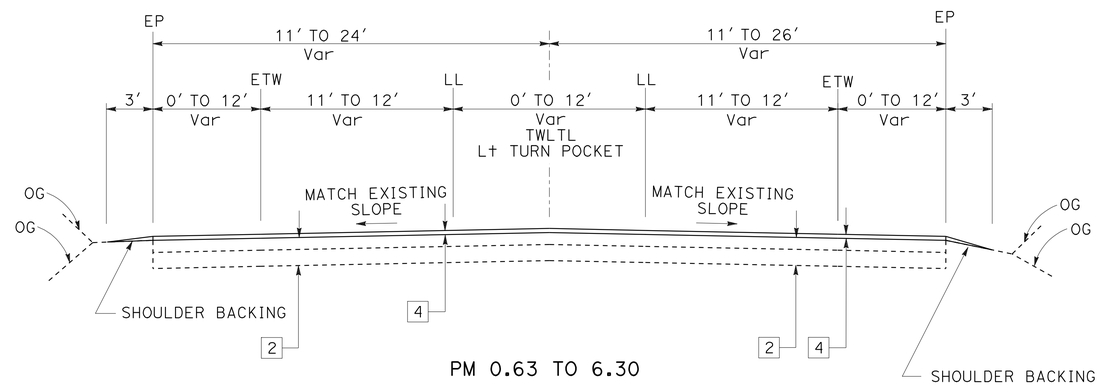


PM 0.63 TO 6.30

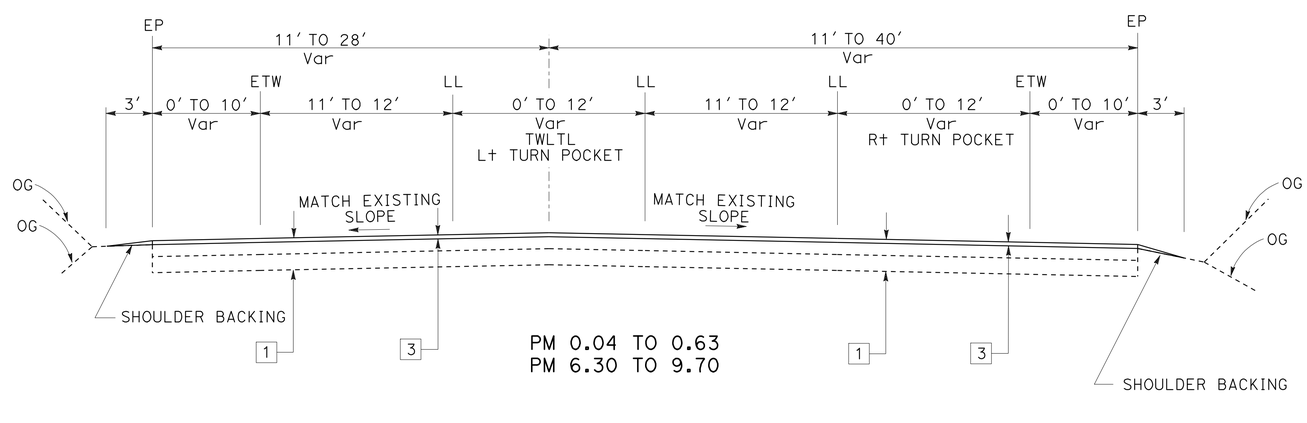


PM 0.04 TO 0.63
PM 6.30 TO 9.70

**ROUTE 174**

# TYPICAL CROSS SECTIONS

NO SCALE

**X-1**

STATE OF CALIFORNIA - DEPARTMENT OF TRANSPORTATION
Caltrans® **MAINTENANCE DESIGN**

FUNCTIONAL SUPERVISOR: RONALD S. SYKES
CALCULATED-DESIGNED BY: CHARLES WOOTEN
CHECKED BY: RONALD S. SYKES
REVISED BY
DATE REVISED

LAST REVISION 00-00-00
DATE PLOTTED => 29-MAR-2012
TIME PLOTTED => 06:31

| Dist | COUNTY | ROUTE | POST MILES TOTAL PROJECT | SHEET No. | TOTAL SHEETS |
|---|---|---|---|---|---|
| 03 | Nev | 174 | 0.0/10.2 | 3 | 26 |

REGISTERED CIVIL ENGINEER 3-19-12 DATE

3-26-12
PLANS APPROVAL DATE

REGISTERED PROFESSIONAL ENGINEER CHARLES T. WOOTEN No. 77905 Exp. 6-30-13 CIVIL STATE OF CALIFORNIA

*THE STATE OF CALIFORNIA OR ITS OFFICERS OR AGENTS SHALL NOT BE RESPONSIBLE FOR THE ACCURACY OR COMPLETENESS OF SCANNED COPIES OF THIS PLAN SHEET.*

## NOTE:

1. EXISTING UTILITY FACILITIES HAVE NOT BEEN PLOTTED ON THESE PLANS.

## ABBREVIATIONS:

HMA-A - HOT MIX ASPHALT (TYPE A)

HMA-BWC - HOT MIX ASPHALT (BONDED WEARING COURSE - GAP GRADED)

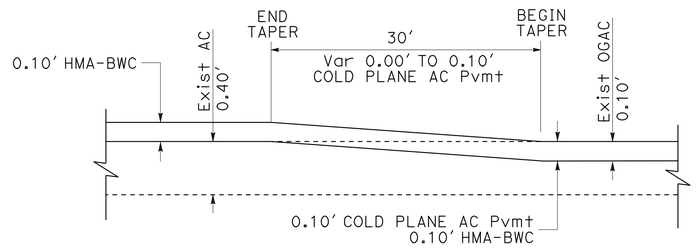


**PAVING CONFORM**

PM 6.30

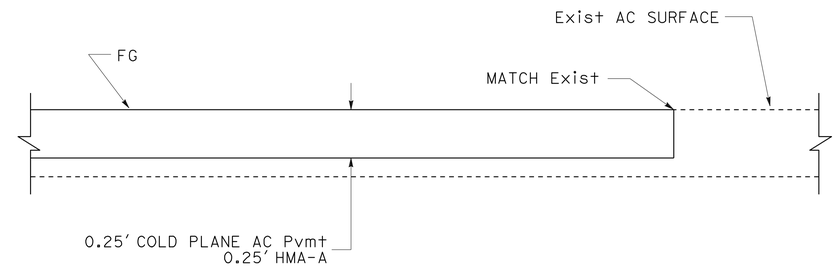


**PAVING CONFORM AT END CONSTRUCTION**

INTERSECTION OF NEAL STREET AND SOUTH AUBURN STREET
PM 10.20

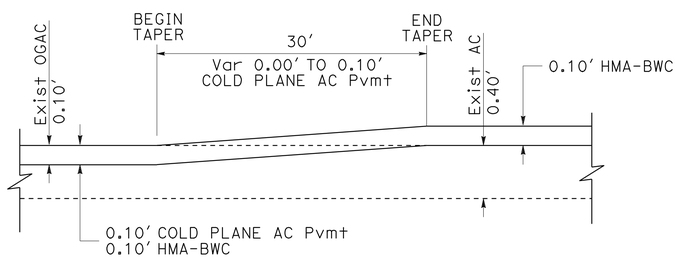


**PAVING CONFORM**

PM 0.63

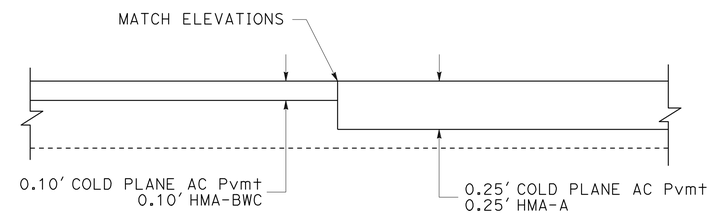


**PAVING CONFORM**

PM 9.70

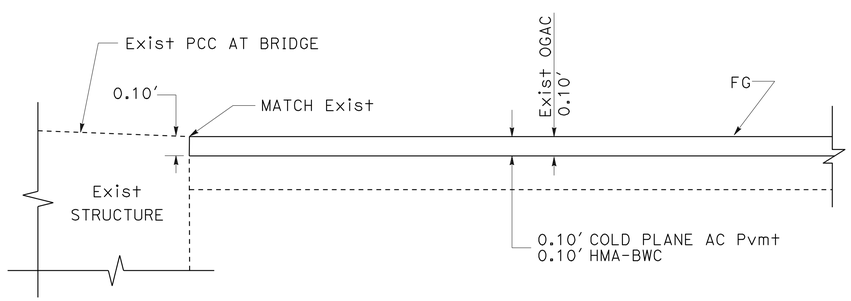


**PAVING CONFORM AT BEGIN CONSTRUCTION**

BEAR RIVER (BRIDGE NUMBER 19-0065), PM 0.04

# CONSTRUCTION DETAILS

NO SCALE

C-1

STATE OF CALIFORNIA - DEPARTMENT OF TRANSPORTATION
Caltrans MAINTENANCE DESIGN

FUNCTIONAL SUPERVISOR: RONALD S. SYKES

CALCULATED-DESIGNED BY: CHARLES WOOTEN
CHECKED BY: RONALD S. SYKES
REVISED BY
DATE REVISED

LAST REVISION 00-00-00 | DATE PLOTTED => 27-MAR-2012 | TIME PLOTTED => 13:11

| Dist | COUNTY | ROUTE | POST MILES TOTAL PROJECT | SHEET No. | TOTAL SHEETS |
|---|---|---|---|---|---|
| 03 | Nev | 174 | 0.0/10.2 | 4 | 26 |

Charles Wooten 3-19-12
REGISTERED CIVIL ENGINEER DATE

3-26-12
PLANS APPROVAL DATE

REGISTERED PROFESSIONAL ENGINEER CHARLES T. WOOTEN No. 77905 Exp. 6-30-13 CIVIL STATE OF CALIFORNIA

*THE STATE OF CALIFORNIA OR ITS OFFICERS OR AGENTS SHALL NOT BE RESPONSIBLE FOR THE ACCURACY OR COMPLETENESS OF SCANNED COPIES OF THIS PLAN SHEET.*

## PUBLIC ROAD CONNECTIONS

| POST MILE | SIDE | L | STREET NAME |
|---|---|---|---|
| 0.985 | R+ | 10 | ORCHARD SPRINGS Rd |
| 1.555 | R+ | 12 | ORCHARD SPRINGS Rd |
| 2.370 | R+ | 16 | LAKEWOOD Ln |
| 2.756 | R+ | 10 | BEAR RIVER PINES |
| 3.400 | R+ | 15 | GREENHORN ACCESS Rd |
| 4.630 | R+ | 22 | YOU BET Rd |
| 5.073 | R+ | 16 | PEARDALE Rd |
| 5.613 | R+ | 20 | N MEADOW VIEW Dr |
| 6.830 | R+ | 60 | BRUNSWICK Rd (SEE SHEET C-4) |
| 7.370 | R+ | 20 | CEDAR RIDGE Dr |
| 7.435 | R+ | 22 | BRUNSWICK Dr |
| 7.700 | R+ | 12 | SOMERSET Dr |
| 8.675 | R+ | 18 | BARTLETT Dr |
| 8.710 | R+ | 25 | PINE HILL Dr |
| 9.170 | R+ | 22 | SILVER WAY |
| 9.360 | R+ | 26 | PARTRIDGE Rd |
| 9.705 | R+ | 26 | GOLD HILL Dr |
| 9.710 | R+ | 28 | PARK St |
| 9.790 | R+ | 25 | EAST COLFAX Ave |
| 9.810 | R+ | 15 | OPHIR St |
| 9.930 | R+ | 27 | HENDERSON St |
| 10.065 | R+ | 30 | BIGGS Ave |
| 10.143 | R+ | 20 | HANSEN WAY* |
| 10.185 | R+ | 20 | TINLOY St* |
| 1.125 | L+ | 15 | LOWER COLFAX Rd (MOUNT OLIVE Rd) |
| 1.900 | L+ | 17 | POWERLINE Rd |
| 4.290 | L+ | 18 | DALMATIAN Dr |
| 5.073 | L+ | 2 | PEARDALE Rd |
| 5.580 | L+ | 18 | MEADOW VIEW Dr |
| 5.920 | L+ | 10 | MEADOW Dr |
| 6.645 | L+ | 30 | LAWS RANCH CROSS ROAD |
| 6.723 | L+ | 24 | VIA BORGNIS |
| 8.171 | L+ | 30 | RATTLESNAKE Rd |
| 8.355 | L+ | 20 | OSBORNE HILL Rd |
| 8.560 | L+ | 22 | SUNRISE Ln |
| 8.940 | L+ | 28 | E EMPIRE St |
| 9.225 | L+ | 23 | EMPIRE MINE CROSS Rd |
| 9.634 | L+ | 20 | RACE St |
| 9.765 | L+ | 27 | OAK St |
| 9.865 | L+ | 26 | CENTRAL Ave |
| 9.880 | L+ | 24 | MEMORIAL Ln |
| 9.930 | L+ | 30 | HENDERSON St |
| 10.040 | L+ | 28 | CLARK St |
| 10.143 | L+ | 34 | HANSEN WAY |
| 10.185 | L+ | 20 | TINLOY St* |

* CROSS STREETS DO NOT HAVE "STOP" MARKING AS SHOWN IN DETAIL. EXTEND PAVING JUST BEYOND CROSSWALK OR LIMIT LINE, WHICHEVER IS FARTHEST FROM MAINLINE.

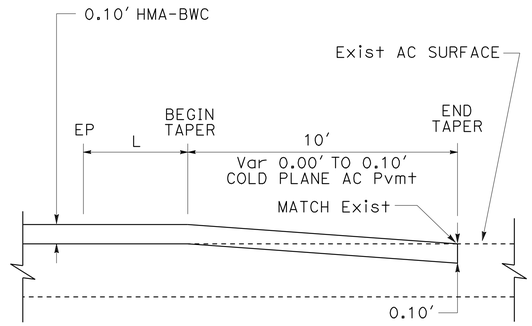


SECTION B - B
PM 0.63 TO 6.30

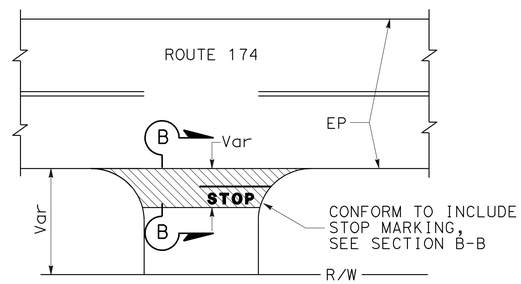


PLAN

## AC PAVEMENT DETAIL

PUBLIC ROAD CONNECTIONS

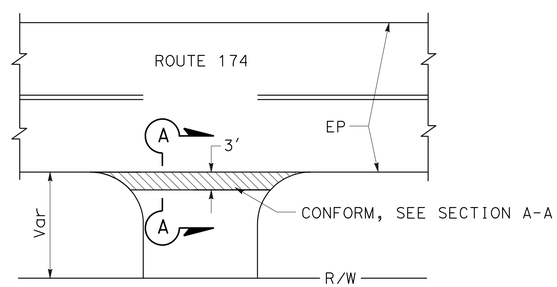


PLAN

## AC PAVEMENT DETAIL

PRIVATE ROADS AND DRIVEWAYS

NOTES:

1. EXISTING UTILITY FACILITIES HAVE NOT BEEN PLOTTED ON THESE PLANS.
2. DIMENSION "L" IS AS SHOWN IN TABLE OR AS DIRECTED BY ENGINEER.

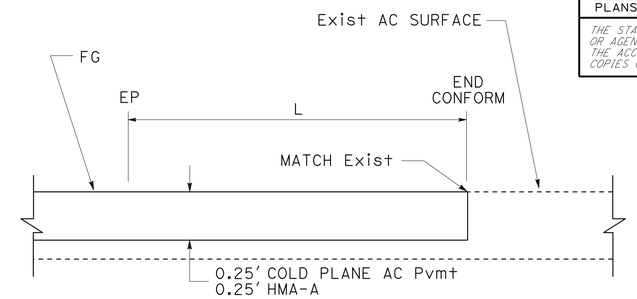


SECTION B - B
PM 9.70 TO 10.20

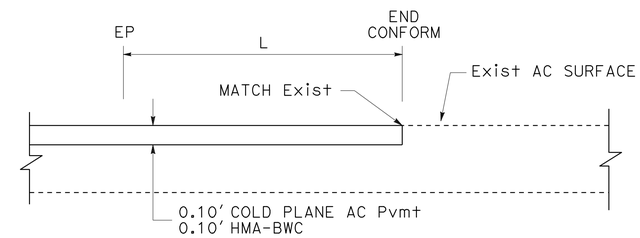


SECTION B - B
PM 0.04 TO 0.63
PM 6.30 TO 9.70

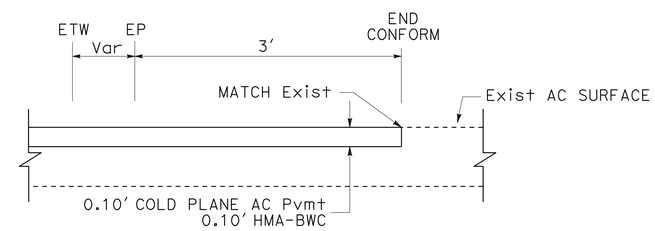


SECTION A - A
PM 0.04 TO 0.63
PM 6.30 TO 9.70

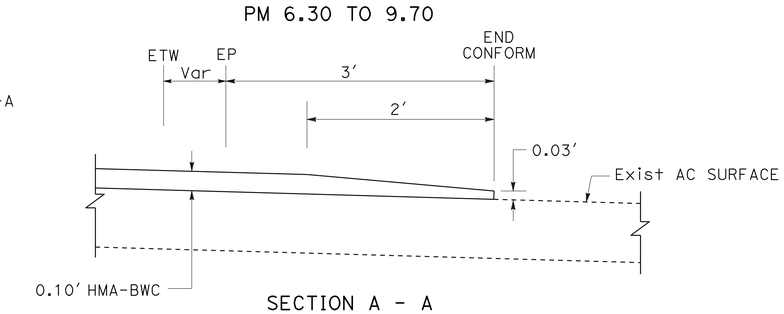


SECTION A - A
PM 0.63 TO 6.30

## CONSTRUCTION DETAILS

NO SCALE

C-2

STATE OF CALIFORNIA - DEPARTMENT OF TRANSPORTATION
Caltrans MAINTENANCE DESIGN

FUNCTIONAL SUPERVISOR: RONALD S. SYKES
CALCULATED-DESIGNED BY: CHARLES WOOTEN
CHECKED BY: RONALD S. SYKES
REVISED BY
DATE REVISED

LAST REVISION 00-00-00
DATE PLOTTED => 27-MAR-2012
TIME PLOTTED => 13:11

| Dist | COUNTY | ROUTE | POST MILES TOTAL PROJECT | SHEET No. | TOTAL SHEETS |
|---|---|---|---|---|---|
| 03 | Nev | 174 | 0.0/10.2 | 5 | 26 |

REGISTERED CIVIL ENGINEER 3-19-12 DATE

3-26-12
PLANS APPROVAL DATE

REGISTERED PROFESSIONAL ENGINEER CHARLES T. WOOTEN No. 77905 Exp. 6-30-13 CIVIL STATE OF CALIFORNIA

*THE STATE OF CALIFORNIA OR ITS OFFICERS OR AGENTS SHALL NOT BE RESPONSIBLE FOR THE ACCURACY OR COMPLETENESS OF SCANNED COPIES OF THIS PLAN SHEET.*

NOTES:

1. EXISTING UTILITY FACILITIES HAVE NOT BEEN PLOTTED ON THESE PLANS.
2. SEE SHEET Q-2 FOR ADJUST FRAME AND COVER TO GRADE LOCATIONS.

LEGEND:

REBAR - REINFORCEMENT BAR

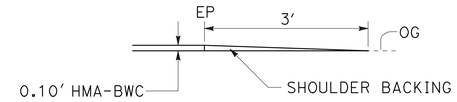


## SHOULDER BACKING CONSTRUCTION

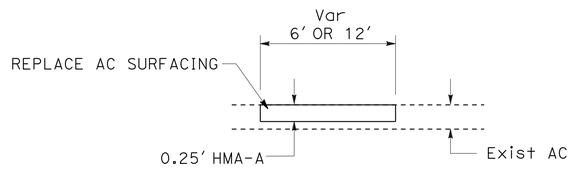


## REPLACE ASPHALT CONCRETE SURFACING

TRAVELED WAY - SECTION VIEW

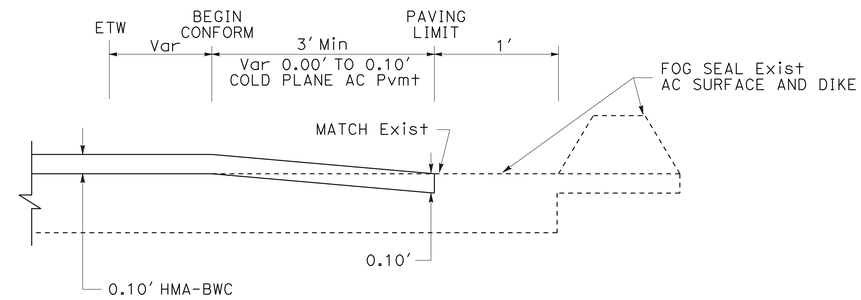


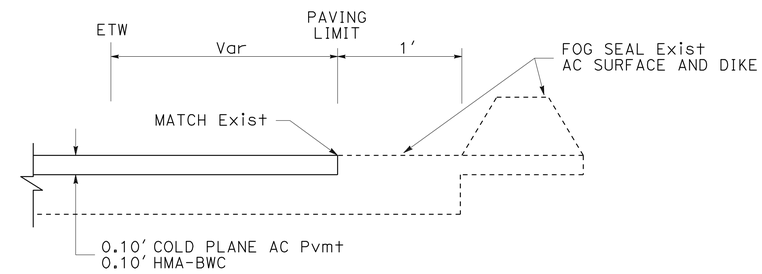


## AC PAVEMENT DETAIL

EXISTING DIKE LOCATIONS

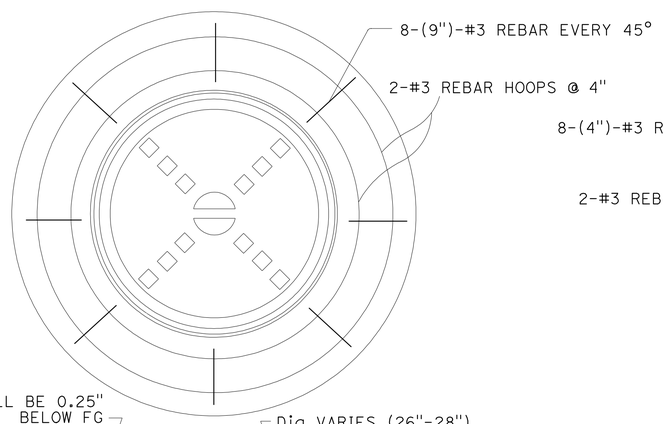


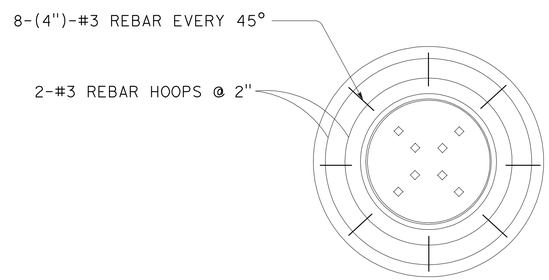


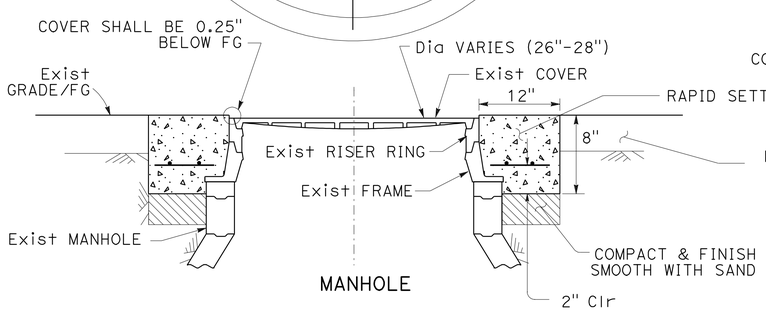


MANHOLE

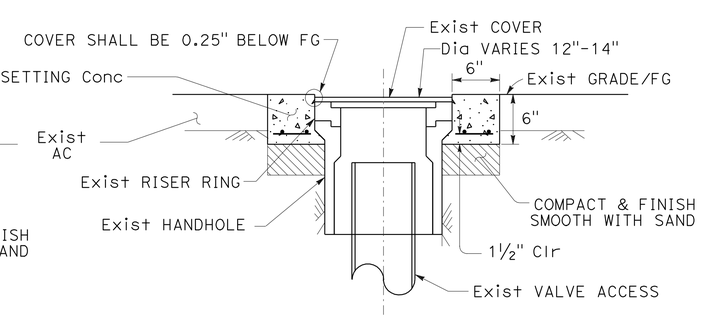


HANDHOLE

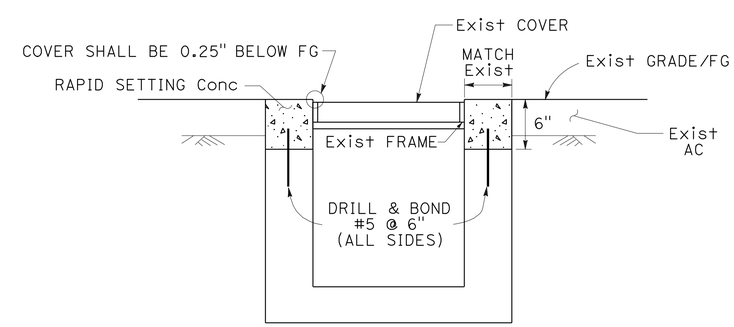


BOX

## ADJUST FRAME AND COVER TO GRADE

SEE NOTE 2

## CONSTRUCTION DETAILS

NO SCALE

C-3

STATE OF CALIFORNIA - DEPARTMENT OF TRANSPORTATION
Caltrans® MAINTENANCE DESIGN

FUNCTIONAL SUPERVISOR: RONALD S. SYKES
CALCULATED-DESIGNED BY: CHARLES WOOTEN
CHECKED BY: RONALD S. SYKES
REVISED BY
DATE REVISED

LAST REVISION 00-00-00 DATE PLOTTED => 27-MAR-2012 TIME PLOTTED => 13:11

| Dist | COUNTY | ROUTE | POST MILES TOTAL PROJECT | SHEET No. | TOTAL SHEETS |
|---|---|---|---|---|---|
| 03 | Nev | 174 | 0.0/10.2 | 6 | 26 |

REGISTERED CIVIL ENGINEER 3-19-12 DATE

3-26-12
PLANS APPROVAL DATE

REGISTERED PROFESSIONAL ENGINEER CHARLES T. WOOTEN No. 77905 Exp. 6-30-13 CIVIL STATE OF CALIFORNIA

*THE STATE OF CALIFORNIA OR ITS OFFICERS OR AGENTS SHALL NOT BE RESPONSIBLE FOR THE ACCURACY OR COMPLETENESS OF SCANNED COPIES OF THIS PLAN SHEET.*

## NOTES:

1. EXISTING UTILITY FACILITIES HAVE NOT BEEN PLOTTED ON THESE PLANS.
2. PAVING LIMITS ARE LOCATED AS SHOWN OR AS DIRECTED BY ENGINEER.

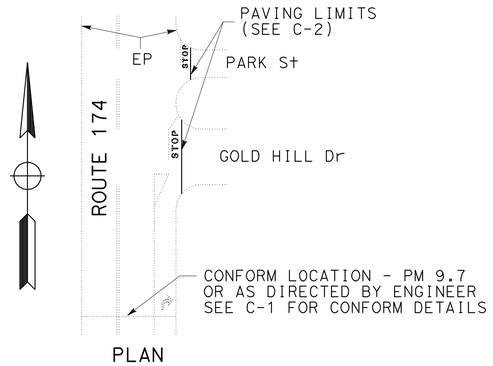


PLAN

## AC PAVEMENT DETAIL

PM 9.7 CONFORM LOCATION

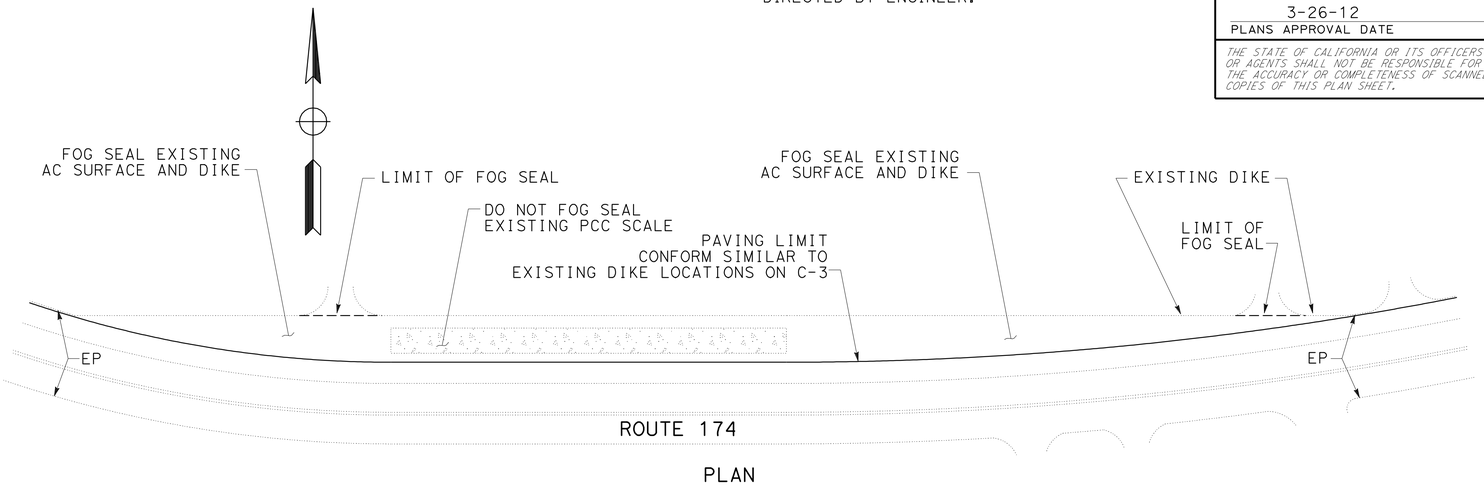


PLAN

## AC PAVEMENT DETAIL

PAVING LIMITS AT EXISTING SCALE
PM 5.25

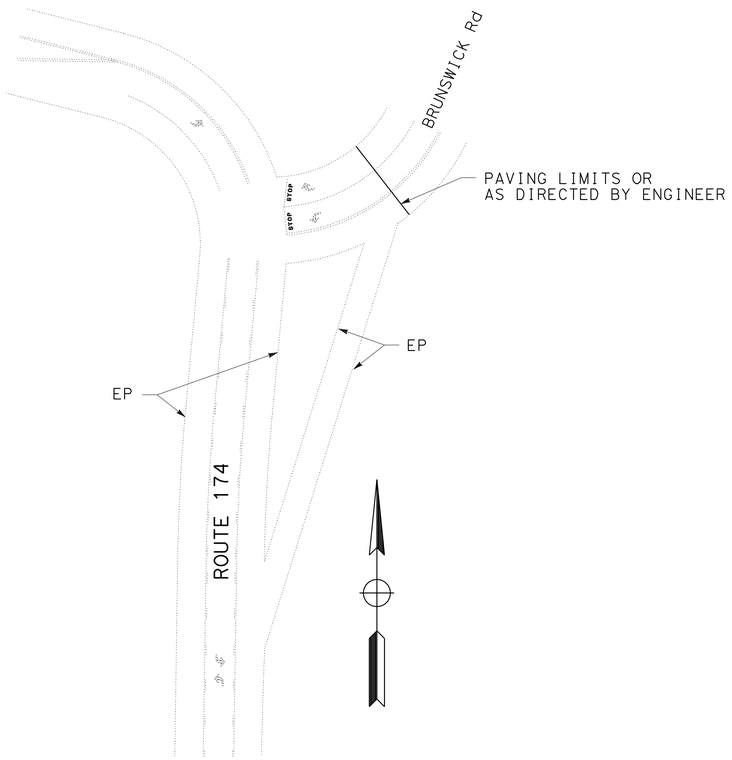


PLAN

## AC PAVEMENT DETAIL

PAVING LIMITS AT BRUNSWICK ROAD
PM 6.830

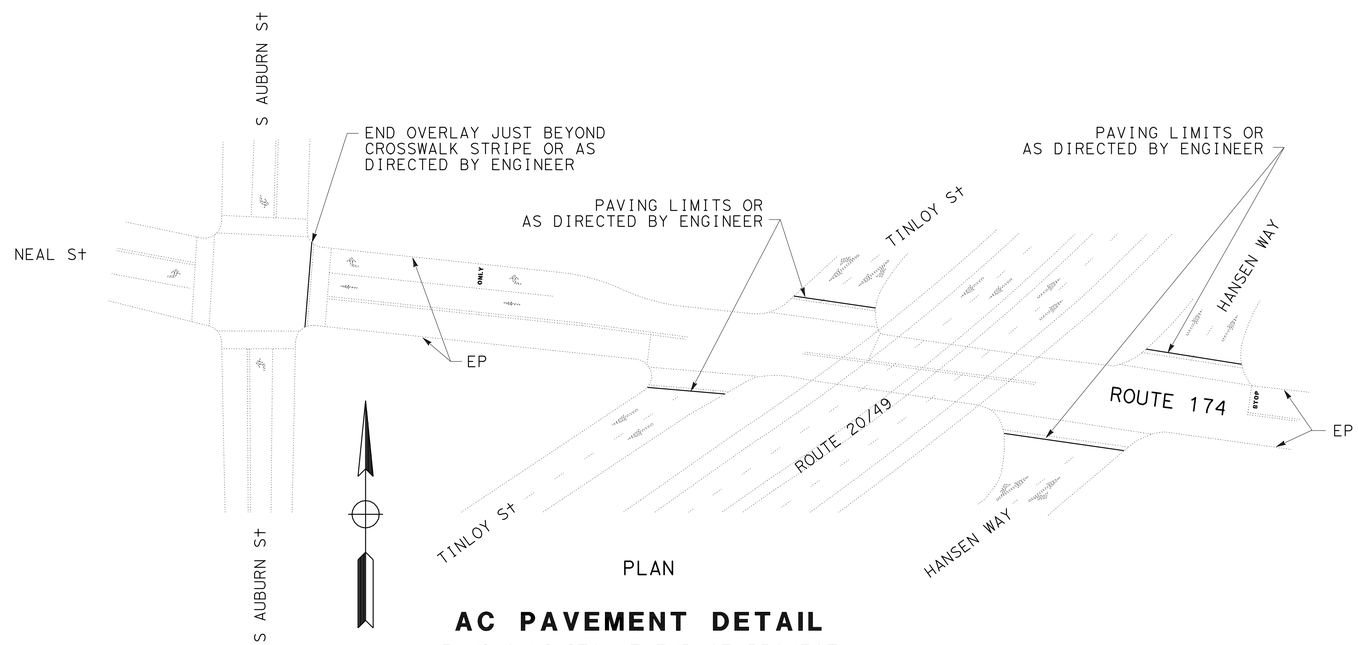


PLAN

## AC PAVEMENT DETAIL

PAVING LIMITS AT END OF PROJECT
PM 10.2

# CONSTRUCTION DETAILS

NO SCALE

C-4

STATE OF CALIFORNIA - DEPARTMENT OF TRANSPORTATION
Caltrans® MAINTENANCE DESIGN

FUNCTIONAL SUPERVISOR: RONALD S. SYKES
CALCULATED-DESIGNED BY: CHARLES WOOTEN
CHECKED BY: RONALD S. SYKES
REVISED BY
DATE REVISED

LAST REVISION 00-00-00
DATE PLOTTED => 20-MAR-2012
TIME PLOTTED => 14:42

| Dist | COUNTY | ROUTE | POST MILES TOTAL PROJECT | SHEET No. | TOTAL SHEETS |
|---|---|---|---|---|---|
| 03 | Nev | 174 | 0.0/10.2 | 7 | 26 |

REGISTERED CIVIL ENGINEER 03-19-12 DATE

3-26-12
PLANS APPROVAL DATE

REGISTERED PROFESSIONAL ENGINEER Jeffrey S Jewett No. 49233 Exp. 9-30-12 CIVIL STATE OF CALIFORNIA

*THE STATE OF CALIFORNIA OR ITS OFFICERS OR AGENTS SHALL NOT BE RESPONSIBLE FOR THE ACCURACY OR COMPLETENESS OF SCANNED COPIES OF THIS PLAN SHEET.*

# STATIONARY MOUNTED CONSTRUCTION AREA SIGNS

| SIGN LETTER | SIGN CODE FEDERAL | SIGN CODE CALIFORNIA | PANEL SIZE | SIGN MESSAGE | NUMBER OF POST AND SIZE | NUMBER OF SIGNS |
|---|---|---|---|---|---|---|
| A | G20-1[Spec](11) | | 60" x 30" | ROAD WORK NEXT 11 MILES | 2 - 4" x 6" | 3 |
| B | | C40(Mod) | 48" x 36" | TRAFFIC FINES DOUBLED IN WORK ZONES | 1 - 4" x 6" | 3 |
| C | G20-1 | | 36" x 18" | ROAD WORK NEXT 10 MILES | SEE NOTE 2 | 2 |
| D | | C40(Mod) | 48" x 36" | TRAFFIC FINES DOUBLED IN WORK ZONES | SEE NOTE 2 | 2 |
| E | W20-1 | C23 | 36" x 36" | ROAD WORK AHEAD | 1 - 4" x 6" | 36 |
| F | G20-2 | C14 | 48" x 24" | END ROAD WORK | 1 - 4" x 6" | 3 |

## LEGEND

| | |
|---|---|
| (X) | CONSTRUCTION AREA SIGN NUMBER |
| <CA> | CALIFORNIA SIGN CODE |
| | SIGN - SINGLE POST |
| | SIGN - TWO POSTS |
| | SIGN - SSBM |

(A) G20-1[Spec](11)

ROAD WORK
NEXT 11 MILES

6" D SERIES LETTERS

60"X30"

ORANGE BACKGROUND WITH BLACK LEGEND AND BORDER.

(B) (D) C40(Mod)<CA>

TRAFFIC FINES
DOUBLED IN
WORK ZONES

4" D SERIES LETTERS

48"X36"

WHITE BACKGROUND WITH BLACK LEGEND AND BORDER.

## NOTES:

1. EXACT SIGN LOCATION TO BE DETERMINED BY THE ENGINEER.
2. ATTACH STRAP AND SADDLE SIGN PANELS TO EXISTING LUMINAIRES.
3. ALL SIGN CODES SHOWN ARE FEDERAL SIGN CODES UNLESS OTHERWISE DESIGNATED AS CALIFORNIA SIGN CODES.

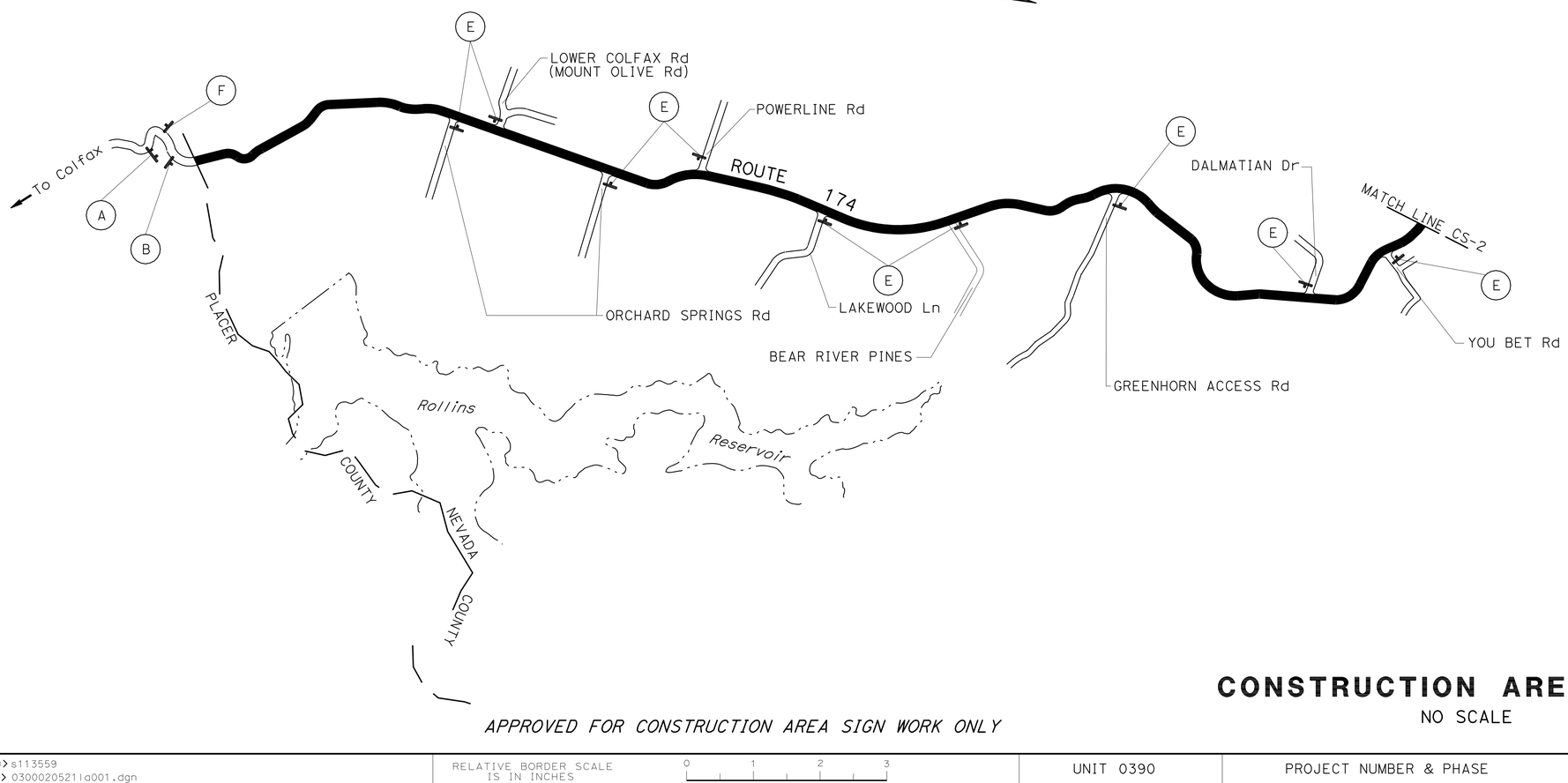


*APPROVED FOR CONSTRUCTION AREA SIGN WORK ONLY*

# CONSTRUCTION AREA SIGNS

NO SCALE

CS-1

STATE OF CALIFORNIA - DEPARTMENT OF TRANSPORTATION

TRAFFIC

FUNCTIONAL SUPERVISOR: SERGIO ACEVES

CALCULATED-DESIGNED BY: JEFF JEWETT

CHECKED BY: JOHN KEBER

REVISED BY

DATE REVISED

LAST REVISION 09-29-11

DATE PLOTTED => 20-MAR-2012
TIME PLOTTED => 14:42

| Dist | COUNTY | ROUTE | POST MILES TOTAL PROJECT | SHEET No. | TOTAL SHEETS |
|---|---|---|---|---|---|
| 03 | Nev | 174 | 0.0/10.2 | 8 | 26 |

REGISTERED CIVIL ENGINEER 03-19-12 DATE

3-26-12
PLANS APPROVAL DATE

REGISTERED PROFESSIONAL ENGINEER Jeffrey S Jewett No. 49233 Exp. 9-30-12 CIVIL STATE OF CALIFORNIA

*THE STATE OF CALIFORNIA OR ITS OFFICERS OR AGENTS SHALL NOT BE RESPONSIBLE FOR THE ACCURACY OR COMPLETENESS OF SCANNED COPIES OF THIS PLAN SHEET.*

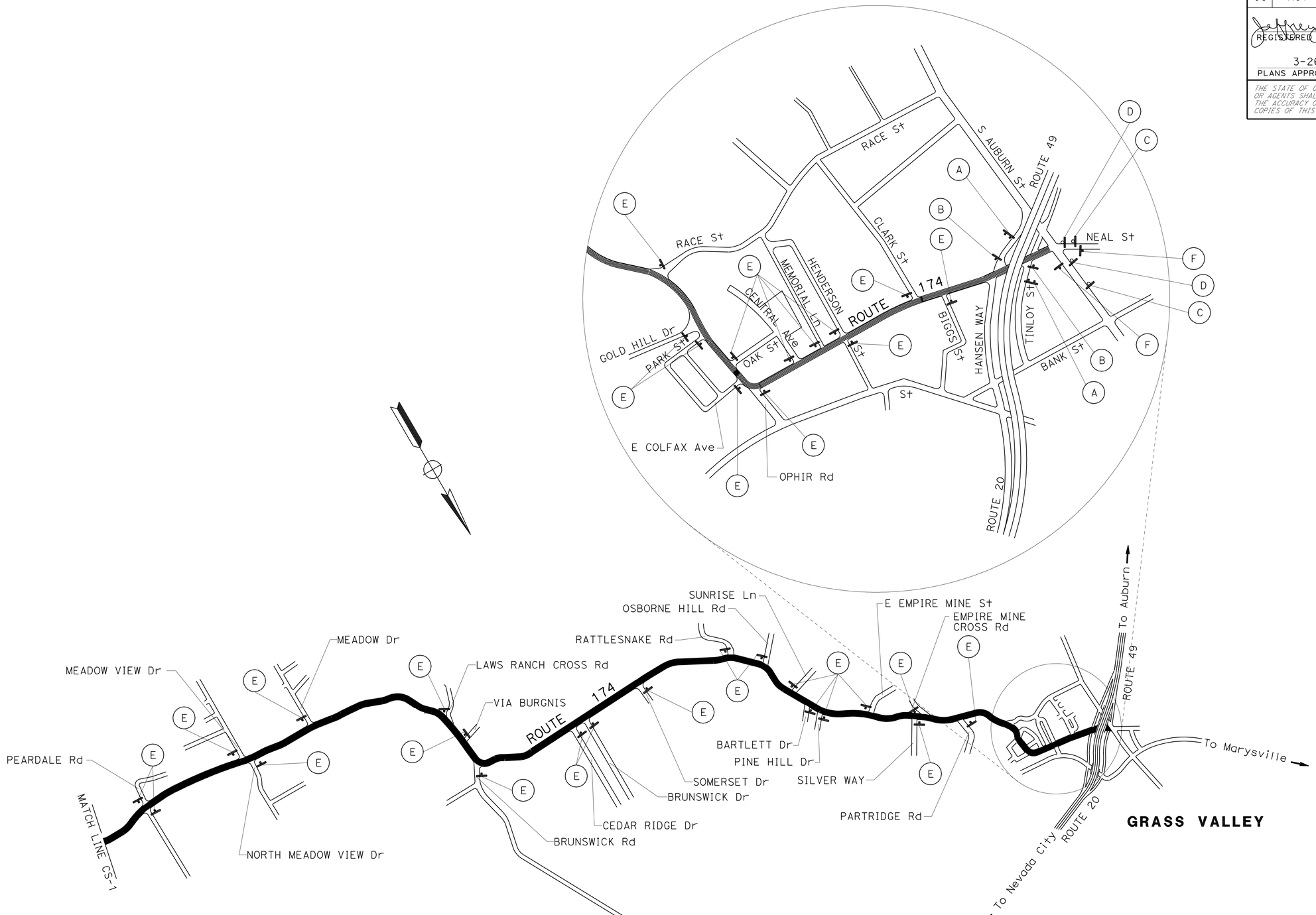


# CONSTRUCTION AREA SIGNS

NO SCALE

**CS-2**

*APPROVED FOR CONSTRUCTION AREA SIGN WORK ONLY*

STATE OF CALIFORNIA - DEPARTMENT OF TRANSPORTATION
Caltrans
**TRAFFIC**

FUNCTIONAL SUPERVISOR: SERGIO ACEVES
CALCULATED-DESIGNED BY: JEFF JEWETT
CHECKED BY: JOHN KEBER
REVISED BY
DATE REVISED

LAST REVISION 09-28-11
DATE PLOTTED => 20-MAR-2012
TIME PLOTTED => 14:42

| Dist | COUNTY | ROUTE | POST MILES TOTAL PROJECT | SHEET No. | TOTAL SHEETS |
|---|---|---|---|---|---|
| 03 | NEV | 174 | 0.0/10.2 | 9 | 26 |

REGISTERED CIVIL ENGINEER 03-19-12 DATE

3-26-12
PLANS APPROVAL DATE

REGISTERED PROFESSIONAL ENGINEER Jeffrey S. Jewett No. 49233 Exp. 9-30-12 CIVIL STATE OF CALIFORNIA

*THE STATE OF CALIFORNIA OR ITS OFFICERS OR AGENTS SHALL NOT BE RESPONSIBLE FOR THE ACCURACY OR COMPLETENESS OF SCANNED COPIES OF THIS PLAN SHEET.*

# PAVEMENT DELINEATION QUANTITIES

| POST MILE | LENGTH | 4" THERMOPLASTIC TRAFFIC STRIPE (BROKEN 36-12) | | | 4" THERMOPLASTIC TRAFFIC STRIPE (BROKEN 12-3) | 4" THERMOPLASTIC TRAFFIC STRIPE (BROKEN 6-1) | 4" THERMOPLASTIC TRAFFIC STRIPE | | | | | 8" THERMOPLASTIC TRAFFIC STRIPE | | PAVEMENT MARKER (RETROREFLECTIVE-RECESSED) | | | OBJECT MARKER (L-1) | DELINEATOR (CLASS 2) | | |
|---|---|---|---|---|---|---|---|---|---|---|---|---|---|---|---|---|---|---|---|---|
| | | DETAIL 6 | DETAIL 19 | DETAIL 32 | DETAIL 27C | DETAIL 40 | DETAIL 19 | DETAIL 21 | DETAIL 22 | DETAIL 27B | DETAIL 32 | DETAIL 38 | DETAIL 38A | TYPE D | TYPE G | TYPE H | | TYPE E | TYPE F | TYPE G |
| | LF | LF | LF | LF | LF | LF | LF | LF | LF | LF | LF | LF | LF | EA | EA | EA | EA | EA | EA | EA |
| 0.04 TO 1.00 | 3,432 | | | | 40 | | | | 10,085 | 10,125 | | | | 422 | | | | 46 | 4 | |
| 1.00 TO 1.97 | 5,121 | | | | 180 | | | | 12,132 | 10,261 | | 100 | | 505 | | | | 21 | 7 | |
| 1.97 TO 3.40 | 7,550 | 739 | 528 | | 80 | | 528 | | 12,354 | 14,969 | | | | 530 | 16 | 24 | | 61 | | 2 |
| 3.40 TO 4.29 | 4,699 | | 898 | | 40 | | 898 | | 7,498 | 9,332 | | | | 338 | | 38 | | 37 | 2 | |
| 4.29 TO 5.07 | 4,118 | | | | 420 | | | | 8,548 | 8,126 | | 100 | | 362 | 5 | | | 47 | | |
| 5.07 TO 5.95 | 4,646 | | | | 200 | | | | 9,438 | 9,598 | | | | 396 | | | | 7 | 8 | |
| 5.95 TO 6.65 | 3,696 | | | | 160 | | | | 7,180 | 7,347 | | | | 302 | | | 1 | 18 | | |
| 6.65 TO 6.84 | 1,003 | | | 1,373 | | | | | 1,268 | 2,007 | 1,373 | | | 128 | | | | 5 | 1 | |
| 6.84 TO 7.48 | 3,379 | | | 100 | 80 | | | | 6,379 | 6,629 | 100 | 100 | | 278 | 5 | | | 25 | 5 | |
| 7.48 TO 7.71 | 1,214 | | | 739 | 100 | | | | 2,534 | 2,423 | 739 | | | 150 | | | | 3 | 1 | |
| 7.71 TO 8.52 | 4,276 | | | | 60 | | | | 10,454 | 8,402 | | 250 | | 444 | 12 | | | 23 | 2 | |
| 8.52 TO 8.62 | 528 | | | 819 | 40 | | | | 212 | 990 | 819 | | | 58 | | | | 4 | | |
| 8.62 TO 9.64 | 5,386 | | | | 380 | | | | 10,402 | 10,518 | | 422 | | 444 | 20 | | | 27 | 5 | |
| 9.64 TO 9.71 | 370 | | | | | 95 | | 708 | | 708 | | | 153 | | | | | | | |
| 9.71 TO 10.2 | 2,587 | | | | 120 | | | 5,143 | | 5,023 | | | | | | | | | | |
| SUBTOTAL | | 739 | 1,426 | 3,031 | 1,900 | 95 | 1,426 | 2,925 | 98,484 | 106,458 | 3,031 | 972 | 153 | 4,357 | 58 | 62 | 1 | 324 | 39 | 2 |
| TOTAL | | 5,196 | | | 1,900 | 95 | 212,324 | | | | | 1,125 | | 4,477 | | | 1 | 365 | | |

NOTE: EXACT DELINEATOR AND OBJECT MARKER LOCATIONS TO BE DETERMINED BY THE ENGINEER.

REVISED BY | DATE REVISED
JEFF JEWETT | JOHN KEBER
CALCULATED-DESIGNED BY | CHECKED BY
FUNCTIONAL SUPERVISOR: SERGIO ACEVES
STATE OF CALIFORNIA - DEPARTMENT OF TRANSPORTATION
Caltrans
TRAFFIC

**PAVEMENT DELINEATION QUANTITIES**

**PDQ-1**

LAST REVISION 10-11-11 | DATE PLOTTED => 27-MAR-2012 | TIME PLOTTED => 13:11

| Dist | COUNTY | ROUTE | POST MILES TOTAL PROJECT | SHEET No. | TOTAL SHEETS |
|---|---|---|---|---|---|
| 03 | NEV | 174 | 0.0/10.2 | 10 | 26 |

REGISTERED CIVIL ENGINEER 03-19-12 DATE

3-26-12
PLANS APPROVAL DATE

REGISTERED PROFESSIONAL ENGINEER Jeffrey S Jewett No. 49233 Exp. 9-30-12 CIVIL STATE OF CALIFORNIA

*THE STATE OF CALIFORNIA OR ITS OFFICERS OR AGENTS SHALL NOT BE RESPONSIBLE FOR THE ACCURACY OR COMPLETENESS OF SCANNED COPIES OF THIS PLAN SHEET.*

# PAVEMENT DELINEATION QUANTITIES

| POST MILE | THERMOPLASTIC PAVEMENT MARKING | | | | | | | | | | | | REMOVE THERMOPLASTIC PAVEMENT MARKING |
|---|---|---|---|---|---|---|---|---|---|---|---|---|---|
| | LIMIT LINE | STOP | AHEAD | SLOW | SCHOOL | XING | XW WHITE | XW YELLOW | XW WHITE INTERNATIONAL | XW YELLOW INTERNATIONAL | TYPE I ARROW | TYPE III ARROW | |
| | SQFT | SQFT | SQFT | SQFT | SQFT | SQFT | SQFT | SQFT | SQFT | SQFT | SQFT | SQFT | SQFT |
| 0.04 TO 1.00 | 20 | 22 | | | | | | | | | | | 42 |
| 1.00 TO 1.97 | 60 | 66 | | 46 | 70 | 42 | | 60 | 100 | 100 | | 42 | 446 |
| 1.97 TO 3.40 | 40 | 44 | | | | | | | | | | | 84 |
| 3.40 TO 4.29 | 20 | 22 | | | | | | | | | | | 42 |
| 4.29 TO 5.07 | 90 | 110 | | | | | | | | | | 42 | 200 |
| 5.07 TO 5.95 | 40 | 66 | | | | | | | | | | | 106 |
| 5.95 TO 6.65 | 40 | 44 | | | | | | | | | | | 42 |
| 6.65 TO 6.84 | | | | | | | | | | | | 168 | |
| 6.84 TO 7.48 | 60 | 88 | | | | | | | | | | 126 | |
| 7.48 TO 7.71 | 20 | 44 | | | | | | | | | | 84 | |
| 7.71 TO 8.52 | 20 | 22 | | | | | | | | | | 126 | |
| 8.52 TO 8.62 | 20 | 22 | | 23 | 35 | 21 | | 80 | | | | 84 | |
| 8.62 TO 9.64 | 150 | 153 | | 23 | 35 | 21 | | | | | 31 | 84 | |
| 9.64 TO 9.71 | | | | | | | | | | | | 42 | |
| 9.71 TO 10.2 | 90 | 286 | 31 | 46 | 70 | 42 | 720 | | 400 | 133 | 31 | 42 | |
| SUBTOTAL | 670 | 989 | 31 | 138 | 210 | 126 | 720 | 140 | 500 | 233 | 62 | 840 | 962 |
| TOTAL | 4,659 | | | | | | | | | | | | 962 |

ABBREVIATION

XW - CROSSWALK

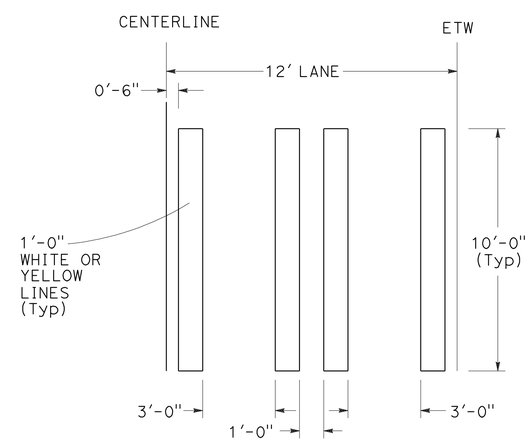


INTERNATIONAL CROSSWALK DETAIL

NO SCALE

# PAVEMENT DELINEATION QUANTITIES

PDQ-2

STATE OF CALIFORNIA - DEPARTMENT OF TRANSPORTATION
Caltrans
TRAFFIC

FUNCTIONAL SUPERVISOR: SERGIO ACEVES
CALCULATED-DESIGNED BY: JEFF JEWETT
CHECKED BY: JOHN KEBER
REVISED BY
DATE REVISED

LAST REVISION 03-15-12
DATE PLOTTED => 20-MAR-2012
TIME PLOTTED => 14:42

| Dist | COUNTY | ROUTE | POST MILES TOTAL PROJECT | SHEET No. | TOTAL SHEETS |
|---|---|---|---|---|---|
| 03 | Nev | 174 | 0.0/10.2 | 11 | 26 |

Charles Wooten 3-19-12
REGISTERED CIVIL ENGINEER DATE

3-26-12
PLANS APPROVAL DATE

REGISTERED PROFESSIONAL ENGINEER CHARLES T. WOOTEN No. 77905 Exp. 6-30-13 CIVIL STATE OF CALIFORNIA

*THE STATE OF CALIFORNIA OR ITS OFFICERS OR AGENTS SHALL NOT BE RESPONSIBLE FOR THE ACCURACY OR COMPLETENESS OF SCANNED COPIES OF THIS PLAN SHEET.*

## ROADWAY QUANTITIES

| WESTBOUND POST MILE | | HMA (BONDED WEARING COURSE-GAP GRADED) | ASPHALTIC EMULSION MEMBRANE (BONDED WEARING COURSE) | HOT MIX ASPHALT (TYPE A) | TACK COAT | COLD PLANE ASPHALT CONCRETE PAVEMENT | SHOULDER BACKING |
|---|---|---|---|---|---|---|---|
| BEGIN | END | TON | TON | TON | TON | SQYD | TON |
| 0.040 | 0.121 | 50.30 | 0.24 | | | 760.32 | 4.43 |
| 0.121 | 0.630 | 261.20 | 1.24 | | | 3,881.97 | 33.26 |
| 0.630 | 0.956 | 168.88 | 0.80 | | | | 21.30 |
| 0.956 | 1.250 | 233.86 | 1.11 | | | 29.00 | 6.83 |
| 1.250 | 1.278 | 17.94 | 0.07 | | | | 1.83 |
| 1.278 | 1.670 | 191.44 | 0.89 | | | 31.00 | 25.61 |
| 1.670 | 1.770 | 85.32 | 0.38 | | | | 6.53 |
| 1.770 | 1.780 | 5.43 | 0.03 | | | | 0.65 |
| 1.780 | 2.314 | 272.77 | 1.30 | | | | 34.89 |
| 2.314 | 2.376 | 53.11 | 0.22 | | | 37.00 | 4.05 |
| 2.376 | 3.712 | 706.50 | 3.27 | | | 45.00 | 87.29 |
| 3.712 | 3.732 | 12.34 | 0.05 | | | | 1.31 |
| 3.732 | 4.386 | 338.84 | 1.60 | | | | 42.73 |
| 4.386 | 4.617 | 143.43 | 0.69 | | | | 15.09 |
| 4.617 | 4.688 | 91.16 | 0.29 | | | 72.00 | 4.64 |
| 4.688 | 5.060 | 228.31 | 1.05 | | | | 24.31 |
| 5.060 | 5.201 | 125.12 | 0.54 | | | 29.00 | 7.36 |
| 5.201 | 5.311 | 105.32 | 0.50 | | | | 4.71 |
| 5.311 | 5.623 | 259.31 | 1.18 | | | 39.00 | 5.54 |
| 5.623 | 5.653 | 17.46 | 0.08 | | | | 1.96 |
| 5.653 | 5.935 | 223.43 | 1.06 | | | | 6.05 |
| 5.935 | 6.005 | 38.52 | 0.18 | | | | 4.57 |
| 6.005 | 6.106 | 87.63 | 0.42 | | | | 0.66 |
| 6.106 | 6.300 | 151.07 | 0.73 | | | | |
| 6.300 | 6.800 | 403.41 | 1.93 | | | 6,043.67 | |
| 6.800 | 6.850 | 62.68 | 0.31 | | | 965.67 | 2.03 |
| 6.850 | 7.112 | 183.02 | 0.89 | | | 2,766.72 | 2.64 |
| 7.112 | 7.293 | 126.44 | 0.61 | | | 1,911.36 | |
| 7.293 | 7.504 | 179.66 | 0.84 | | | 2,621.73 | 4.26 |
| 7.504 | 7.645 | 104.30 | 0.51 | | | 1,580.96 | 6.74 |
| 7.645 | 7.685 | 21.73 | 0.11 | | | 328.53 | 2.61 |
| 7.685 | 7.786 | 76.50 | 0.33 | | | 1,029.55 | 6.60 |
| 7.786 | 8.098 | 244.47 | 1.18 | | | 3,696.80 | |
| 8.098 | 8.188 | 71.04 | 0.34 | | | 1,074.00 | 0.93 |
| 8.188 | 8.299 | 61.50 | 0.30 | | | 929.68 | 7.25 |
| 8.299 | 8.550 | 201.19 | 0.97 | | | 3,025.07 | 5.88 |
| 8.550 | 8.711 | 106.25 | 0.50 | | | 1,549.80 | 10.52 |
| 8.711 | 9.586 | 467.55 | 2.22 | | | 6,947.33 | 57.17 |
| 9.586 | 9.700 | 88.48 | 0.43 | | | 1,337.60 | 0.27 |
| 9.700 | 9.717 | | | 45.95 | 0.08 | 259.31 | |
| 9.717 | 10.162 | | | 971.45 | 1.72 | 5,369.61 | |
| 10.162 | 10.200 | | | 141.75 | 0.25 | 779.80 | |
| SUBTOTAL (WB ONLY) | | 6,266.91 | 29.39 | 1,159.15 | 2.05 | 47,141.48 | 452.50 |

## ROADWAY QUANTITIES

| EASTBOUND POST MILE | | HMA (BONDED WEARING COURSE-GAP GRADED) | ASPHALTIC EMULSION MEMBRANE (BONDED WEARING COURSE) | HOT MIX ASPHALT (TYPE A) | TACK COAT | COLD PLANE ASPHALT CONCRETE PAVEMENT | SHOULDER BACKING |
|---|---|---|---|---|---|---|---|
| BEGIN | END | TON | TON | TON | TON | SQYD | TON |
| 0.040 | 0.121 | 50.30 | 0.24 | | | 760.32 | 4.43 |
| 0.121 | 0.630 | 260.08 | 1.24 | | | 3,881.97 | 33.26 |
| 0.630 | 1.038 | 211.30 | 1.00 | | | | 26.66 |
| 1.038 | 1.139 | 75.45 | 0.32 | | | 40.00 | 1.65 |
| 1.139 | 1.199 | 41.91 | 0.20 | | | | 3.92 |
| 1.199 | 1.255 | 34.77 | 0.17 | | | | 3.66 |
| 1.255 | 1.905 | 342.27 | 1.54 | | | 56.00 | 42.47 |
| 1.905 | 1.955 | 27.17 | 0.13 | | | | 3.27 |
| 1.955 | 4.485 | 1,317.56 | 6.19 | | | 36.00 | 165.31 |
| 4.485 | 4.667 | 101.05 | 0.48 | | | | 11.89 |
| 4.667 | 4.919 | 158.64 | 0.76 | | | | 0.38 |
| 4.919 | 5.019 | 54.33 | 0.26 | | | | 6.53 |
| 5.019 | 5.211 | 187.51 | 0.88 | | | 52.00 | 12.55 |
| 5.211 | 5.241 | 28.41 | 0.12 | | | | 1.96 |
| 5.241 | 5.574 | 185.12 | 0.88 | | | | 21.76 |
| 5.574 | 5.725 | 133.58 | 0.58 | | | 38.00 | 2.69 |
| 5.725 | 5.745 | 10.87 | 0.05 | | | | 1.31 |
| 5.745 | 5.785 | 33.22 | 0.15 | | | | 1.38 |
| 5.785 | 6.259 | 282.94 | 1.26 | | | 46.00 | 30.97 |
| 6.259 | 6.370 | 87.97 | 0.43 | | | 28.00 | 7.25 |
| 6.370 | 6.450 | 43.46 | 0.21 | | | 657.07 | 5.23 |
| 6.450 | 6.531 | 50.30 | 0.24 | | | 760.32 | |
| 6.531 | 6.692 | 102.31 | 0.47 | | | 1,462.35 | 10.52 |
| 6.692 | 6.944 | 208.96 | 1.00 | | | 3,132.80 | 5.95 |
| 6.944 | 7.005 | 33.14 | 0.16 | | | 501.01 | 3.99 |
| 7.005 | 7.166 | 99.97 | 0.48 | | | 1,511.25 | 4.95 |
| 7.166 | 7.186 | 10.87 | 0.05 | | | 164.27 | 1.31 |
| 7.186 | 7.287 | 70.55 | 0.34 | | | 1,066.56 | |
| 7.287 | 7.468 | 147.51 | 0.71 | | | 2,229.92 | 3.41 |
| 7.468 | 7.670 | 145.66 | 0.71 | | | 2,205.12 | 4.66 |
| 7.670 | 8.073 | 226.93 | 1.10 | | | 3,436.97 | 23.86 |
| 8.073 | 8.224 | 151.50 | 0.72 | | | 2,242.73 | 3.80 |
| 8.224 | 8.345 | 61.04 | 0.30 | | | 922.83 | 7.91 |
| 8.345 | 8.416 | 78.89 | 0.37 | | | 1,166.37 | 4.64 |
| 8.416 | 8.446 | 18.96 | 0.09 | | | 288.40 | 1.96 |
| 8.446 | 8.507 | 30.77 | 0.15 | | | 465.23 | 3.99 |
| 8.507 | 8.728 | 139.15 | 0.66 | | | 2,075.80 | 14.44 |
| 8.728 | 9.700 | 538.40 | 2.51 | | | 7,840.12 | 63.51 |
| 9.700 | 9.726 | | | 37.84 | 0.07 | 213.55 | |
| 9.726 | 10.200 | | | 1,113.62 | 1.91 | 5,979.52 | |
| SUBTOTAL (EB ONLY) | | 5,782.83 | 27.16 | 1,151.46 | 1.98 | 43,260.48 | 547.43 |

# SUMMARY OF QUANTITIES

Q-1

STATE OF CALIFORNIA - DEPARTMENT OF TRANSPORTATION
Caltrans® MAINTENANCE DESIGN

FUNCTIONAL SUPERVISOR: RONALD S. SYKES
CALCULATED-DESIGNED BY: CHARLES WOOTEN
CHECKED BY: RONALD S. SYKES
REVISED BY
DATE REVISED

LAST REVISION 00-00-00
DATE PLOTTED => 20-MAR-2012
TIME PLOTTED => 14:42

| Dist | COUNTY | ROUTE | POST MILES TOTAL PROJECT | SHEET No. | TOTAL SHEETS |
|---|---|---|---|---|---|
| 03 | Nev | 174 | 0.0/10.2 | 12 | 26 |

Charles Wooten 3-19-12
REGISTERED CIVIL ENGINEER DATE

3-26-12
PLANS APPROVAL DATE

REGISTERED PROFESSIONAL ENGINEER CHARLES T. WOOTEN No. 77905 Exp. 6-30-13 CIVIL STATE OF CALIFORNIA

*THE STATE OF CALIFORNIA OR ITS OFFICERS OR AGENTS SHALL NOT BE RESPONSIBLE FOR THE ACCURACY OR COMPLETENESS OF SCANNED COPIES OF THIS PLAN SHEET.*

## ROADWAY QUANTITIES

| LEFT TURN LANE POST MILE | | HMA (BONDED WEARING COURSE-GAP GRADED) | ASPHALTIC EMULSION MEMBRANE (BONDED WEARING COURSE) | HOT MIX ASPHALT (TYPE A) | TACK COAT | COLD PLANE ASPHALT CONCRETE PAVEMENT | SHOULDER BACKING |
|---|---|---|---|---|---|---|---|
| BEGIN | END | TON | TON | TON | TON | SQYD | TON |
| 1.026 | 1.237 | 98.26 | 0.48 | | | | |
| 4.596 | 4.697 | 47.04 | 0.23 | | | | |
| 6.649 | 6.850 | 93.60 | 0.45 | | | 1,415.04 | |
| 6.850 | 6.904 | 25.15 | 0.12 | | | 380.16 | |
| 7.464 | 7.585 | 56.35 | 0.27 | | | 851.84 | |
| 7.630 | 7.841 | 98.26 | 0.48 | | | 1,485.44 | |
| 8.098 | 8.228 | 60.54 | 0.29 | | | 915.20 | |
| 8.507 | 8.615 | 50.30 | 0.24 | | | 760.32 | |
| 8.912 | 9.003 | 42.38 | 0.21 | | | 640.64 | |
| 9.303 | 9.404 | 47.04 | 0.23 | | | 711.04 | |
| SUBTOTAL (LEFT TURN LANES ONLY) | | 618.91 | 3.00 | 0.00 | 0.00 | 7,159.68 | 0.00 |
| SUBTOTAL (WB ONLY) | | 6,266.91 | 29.39 | 1,159.15 | 2.05 | 47,141.48 | 452.50 |
| SUBTOTAL (EB ONLY) | | 5,782.83 | 27.16 | 1,151.46 | 1.98 | 43,260.48 | 547.43 |
| SUBTOTAL (ADDITIONAL ROADWAY QUANTITIES) | | | | | | 2,711.00 | |
| TOTAL | | 12,668.65 | 59.55 | 2,310.61 | 4.03 | 100,272.64 | 999.93 |

## ADJUST FRAME AND COVER TO GRADE

| POST MILE | INTERSECTION/ LOCATION DESCRIPTION | DESCRIPTION | (N) LID DIAMETER/ BOX DIMENSIONS | (N) RAPID SETTING Conc | (N) BAR REINFORCEMENT STEEL | ADJUST FRAME AND COVER TO GRADE |
|---|---|---|---|---|---|---|
| | | | INCH | CY | LB | EA |
| 5.600 | N MEADOW VIEW Dr | HH | 14 | 0.05 | 5.01 | 1 |
| 9.652 | RACE St | HH | 14 | 0.05 | 5.01 | 1 |
| 9.652 | RACE St | HH | 14 | 0.05 | 5.01 | 1 |
| 9.652 | RACE St | BOX | 24x24 | 0.09 | | 1 |
| 9.733 | -- | HH | 14 | 0.05 | 5.01 | 1 |
| 9.880 | MEMORIAL Ln | HH | 14 | 0.05 | 5.01 | 1 |
| 9.923 | HENDERSON St | MH | 31 | 0.29 | 11.23 | 1 |
| 9.930 | HENDERSON St | HH | 12 | 0.05 | 5.01 | 1 |
| 9.930 | HENDERSON St | HH | 14 | 0.05 | 5.01 | 1 |
| 9.930 | HENDERSON St | MH | 34 | 0.29 | 11.23 | 1 |
| 10.040 | CLARK St | BOX | 13x19 | 0.07 | | 1 |
| 10.040 | CLARK St | HH | 13 | 0.05 | 5.01 | 1 |
| 10.065 | BIGGS Ave | HH | 14 | 0.05 | 5.01 | 1 |
| 10.065 | BIGGS Ave | HH | 14 | 0.05 | 5.01 | 1 |
| 10.069 | JUST WEST OF BIGGS Ave | HH | 13 | 0.05 | 5.01 | 1 |
| 10.099 | -- | BOX | 13x19 | 0.07 | | 1 |
| 10.102 | -- | HH | 14 | 0.05 | 5.01 | 1 |
| 10.102 | -- | MH | 29 | 0.29 | 11.23 | 1 |
| 10.131 | HANSEN | HH | 12 | 0.05 | 5.01 | 1 |
| | | | EB SUBTOTAL | 1.75 | 98.82 | 19 |

(N) NOT A SEPARATE PAY ITEM, FOR INFORMATION ONLY

## ADDITIONAL ROADWAY QUANTITIES

| POST MILE | | SIDE | ASPHALTIC EMULSION (FOG SEAL COAT) | COLD PLANE ASPHALT CONCRETE PAVEMENT |
|---|---|---|---|---|
| BEGIN | END | | TON | SQYD |
| 0.0 | 6.3 | R† | 0.98 | 1,872.33 |
| 6.3 | 10.2 | R† | 1.21 | 0.00 |
| 0.0 | 6.3 | L† | 0.34 | 838.67 |
| 6.3 | 10.2 | L† | 0.58 | 0.00 |
| SUBTOTAL | | | 3.11 | 2,711.00* |
| TOTAL | | | 3.11 | |

* SEE ROADWAY QUANTITIES, THIS PAGE

**ABBREVIATION:**

HH - HANDHOLE

## ADJUST FRAME AND COVER TO GRADE

| POST MILE | INTERSECTION/ LOCATION DESCRIPTION | DESCRIPTION | (N) LID DIAMETER/ BOX DIMENSIONS | (N) RAPID SETTING Conc | (N) BAR REINFORCEMENT STEEL | ADJUST FRAME AND COVER TO GRADE |
|---|---|---|---|---|---|---|
| | | | INCH | CY | LB | EA |
| 5.613 | N MEADOW VIEW Dr | HH | 12 | 0.05 | 5.01 | 1 |
| 5.613 | N MEADOW VIEW Dr | HH | 14 | 0.05 | 5.01 | 1 |
| 5.613 | N MEADOW VIEW Dr | HH | 14 | 0.05 | 5.01 | 1 |
| 5.613 | N MEADOW VIEW Dr | BOX | 16x36 | 0.10 | | 1 |
| 9.790 | EAST COLFAX Ave | MH | 28 | 0.29 | 11.23 | 1 |
| 9.803 | JUST EAST OF OPHIR St | MH | 31 | 0.29 | 11.23 | 1 |
| 9.810 | OPHIR St | HH | 14 | 0.05 | 5.01 | 1 |
| 9.843 | -- | HH | 14 | 0.05 | 5.01 | 1 |
| 9.865 | CENTRAL Ave | MH | 29 | 0.29 | 11.23 | 1 |
| 9.865 | CENTRAL Ave | HH | 14 | 0.05 | 5.01 | 1 |
| 9.880 | MEMORIAL Ln | HH | 14 | 0.05 | 5.01 | 1 |
| 9.880 | MEMORIAL Ln | MH | 31 | 0.29 | 11.23 | 1 |
| 9.930 | HENDERSON St | MH | 25 | 0.29 | 11.23 | 1 |
| 9.930 | HENDERSON St | HH | 14 | 0.05 | 5.01 | 1 |
| 9.930 | HENDERSON St | HH | 14 | 0.05 | 5.01 | 1 |
| 9.930 | HENDERSON St | MH | 28 | 0.29 | 11.23 | 1 |
| 9.930 | HENDERSON St | HH | 14 | 0.05 | 5.01 | 1 |
| 10.009 | -- | MH | 28 | 0.29 | 11.23 | 1 |
| 10.040 | CLARK St | HH | 12 | 0.05 | 5.01 | 1 |
| 10.040 | CLARK St | HH | 12 | 0.05 | 5.01 | 1 |
| 10.055 | JUST EAST OF BIGGS Ave | MH | 28 | 0.29 | 11.23 | 1 |
| 10.072 | JUST WEST OF BIGGS Ave | MH | 29 | 0.29 | 11.23 | 1 |
| 10.102 | JUST EAST OF HANSEN Ave | MH | 29 | 0.29 | 11.23 | 1 |
| 10.134 | HANSEN Ave | MH | 28 | 0.29 | 11.23 | 1 |
| 10.169 | UNDER Rte 20 OVERCROSSING | MH | 31 | 0.29 | 11.23 | 1 |
| 10.190 | JUST EAST OF S AUBURN St | MH | 28 | 0.29 | 11.23 | 1 |
| 10.200 | IN CROSS WALK | HH | 14 | 0.05 | 5.01 | 1 |
| | | WB SUBTOTAL | | 4.52 | 211.12 | 27 |
| | | EB SUBTOTAL | | 1.75 | 98.82 | 19 |
| | | SHEET SUBTOTAL | | 6.27 | 309.94 | 46 |
| | | | | TOTAL | | 46 |

(N) NOT A SEPARATE PAY ITEM, FOR INFORMATION ONLY

# SUMMARY OF QUANTITIES
## Q-2

STATE OF CALIFORNIA - DEPARTMENT OF TRANSPORTATION
Caltrans® MAINTENANCE DESIGN

FUNCTIONAL SUPERVISOR: RONALD S. SYKES
CALCULATED-DESIGNED BY: CHARLES WOOTEN
CHECKED BY: RONALD S. SYKES
REVISED BY
DATE REVISED

LAST REVISION 00-00-00
DATE PLOTTED => 27-MAR-2012
TIME PLOTTED => 13:11

| Dist | COUNTY | ROUTE | POST MILES TOTAL PROJECT | SHEET No. | TOTAL SHEETS |
|---|---|---|---|---|---|
| 03 | Nev | 174 | 0.0/10.2 | 13 | 26 |

Charles Wooten 3-19-12
REGISTERED CIVIL ENGINEER DATE

3-26-12
PLANS APPROVAL DATE

REGISTERED PROFESSIONAL ENGINEER CHARLES T. WOOTEN No. 77905 Exp. 6-30-13 CIVIL STATE OF CALIFORNIA

*THE STATE OF CALIFORNIA OR ITS OFFICERS OR AGENTS SHALL NOT BE RESPONSIBLE FOR THE ACCURACY OR COMPLETENESS OF SCANNED COPIES OF THIS PLAN SHEET.*

## REPLACE ASPHALT CONCRETE SURFACING

| | POST MILE | LENGTH (LF) | WIDTH (LF) | LEFT/RIGHT WHEEL PATH | REPLACE ASPHALT CONCRETE SURFACING (CY) | NOTES |
|---|---|---|---|---|---|---|
| EB | 0.231 | 718.1 | 6 | L+ | 39.9 | |
| | 0.640 | 79.2 | 6 | L+ | 4.4 | |
| | 0.782 | 195.4 | 6 | L+ | 10.9 | |
| | 0.807 | 73.9 | 12 | | 8.2 | |
| | 0.829 | 110.9 | 6 | L+ | 6.2 | |
| | 0.886 | 21.1 | 6 | R+ | 1.2 | |
| | 0.895 | 26.4 | 6 | L+ | 1.5 | |
| | 0.903 | 58.1 | 6 | R+ | 3.2 | |
| | 0.938 | 63.4 | 6 | L+ | 3.5 | |
| | 0.948 | 37.0 | 6 | R+ | 2.1 | |
| | 0.978 | 95.0 | 6 | L+ | 5.3 | |
| | 1.001 | 15.8 | 6 | R+ | 0.9 | |
| | 1.005 | 31.7 | 6 | L+ | 1.8 | |
| | 1.156 | 15.8 | 6 | R+ | 0.9 | |
| | 1.213 | 37.0 | 12 | | 4.1 | |
| | 1.304 | 485.8 | 12 | | 54.0 | |
| | 1.447 | 37.0 | 6 | L+ | 2.1 | |
| | 1.498 | 343.2 | 12 | | 38.1 | |
| | 1.593 | 100.3 | 12 | | 11.1 | |
| | 1.614 | 121.4 | 6 | L+ | 6.7 | |
| | 1.678 | 63.4 | 6 | L+ | 3.5 | |
| | 1.711 | 116.2 | 12 | | 12.9 | |
| | 1.738 | 169.0 | 6 | L+ | 9.4 | |
| | 1.767 | 95.0 | 6 | L+ | 5.3 | |
| | 2.513 | 52.8 | 6 | L+ | 2.9 | |
| | 2.676 | 47.5 | 12 | | 5.3 | |
| | 3.195 | 37.0 | 6 | L+ | 2.1 | |
| | 3.207 | 68.6 | 6 | R+ | 3.8 | |
| | 3.827 | 68.6 | 6 | L+ | 3.8 | SHOULDER |
| | 3.869 | 110.9 | 6 | L+ | 6.2 | |
| | 3.964 | 765.6 | 6 | L+ | 42.5 | |
| | 4.347 | 95.0 | 6 | L+ | 5.3 | |
| | 4.386 | 47.5 | 6 | R+ | 2.6 | |
| | 4.392 | 15.8 | 6 | L+ | 0.9 | |
| | 4.408 | 42.2 | 6 | L+ | 2.3 | |
| | 4.422 | 26.4 | 6 | L+ | 1.5 | |
| | 4.550 | 169.0 | 12 | | 18.8 | |
| | 4.719 | 47.5 | 12 | | 5.3 | |
| | 4.728 | 52.8 | 6 | R+ | 2.9 | |
| | 4.736 | 31.7 | 12 | | 3.5 | |
| | 4.923 | 79.2 | 6 | R+ | 4.4 | |
| | 4.962 | 15.8 | 12 | | 1.8 | |
| | 5.016 | 52.8 | 12 | | 5.9 | |
| | 5.025 | 42.2 | 6 | R+ | 2.3 | |
| | 5.031 | 21.1 | 12 | | 2.3 | |
| | 5.041 | 79.2 | 6 | R+ | 4.4 | |
| | 5.054 | 63.4 | 6 | L+ | 3.5 | |
| | 5.072 | 31.7 | 12 | | 3.5 | |
| | 5.115 | 264.0 | 12 | | 29.3 | |
| | 5.151 | 110.9 | 6 | L+ | 6.2 | |
| | 5.284 | 15.8 | 6 | L+ | 0.9 | |
| | 5.332 | 258.7 | 6 | L+ | 14.4 | |
| | 5.392 | 42.2 | 6 | L+ | 2.3 | |
| | 5.596 | 58.1 | 12 | | 6.5 | |
| | 5.621 | 147.8 | 6 | L+ | 8.2 | |
| | 5.832 | 26.4 | 6 | R+ | 1.5 | |
| | | | | SUBTOTAL | 444.1 | |

## REPLACE ASPHALT CONCRETE SURFACING

| | POST MILE | LENGTH (LF) | WIDTH (LF) | LEFT/RIGHT WHEEL PATH | REPLACE ASPHALT CONCRETE SURFACING (CY) | NOTES |
|---|---|---|---|---|---|---|
| EB (CONTINUED) | 5.995 | 52.8 | 6 | L+ | 2.9 | |
| | 6.043 | 116.2 | 6 | R+ | 6.5 | |
| | 6.121 | 142.6 | 12 | | 15.8 | |
| | 6.146 | 84.5 | 12 | | 9.4 | |
| | 6.238 | 105.6 | 6 | R+ | 5.9 | |
| | 6.274 | 274.6 | 12 | | 30.5 | |
| | 6.331 | 42.2 | 6 | R+ | 2.3 | |
| | 6.810 | 26.4 | 6 | R+ | 1.5 | |
| | 9.059 | 37.0 | 6 | R+ | 2.1 | |
| | 9.159 | 63.4 | 6 | L+ | 3.5 | |
| | 9.316 | 158.4 | 6 | R+ | 8.8 | |
| WB | 0.344 | 132.0 | 6 | R+ | 7.3 | |
| | 0.640 | 190.1 | 6 | L+ | 10.6 | |
| | 0.689 | 31.7 | 12 | | 3.5 | |
| | 0.716 | 100.3 | 6 | L+ | 5.6 | |
| | 0.833 | 37.0 | 6 | R+ | 2.1 | |
| | 0.851 | 89.8 | 6 | R+ | 5.0 | |
| | 0.894 | 63.4 | 6 | R+ | 3.5 | |
| | 1.000 | 37.0 | 6 | R+ | 2.1 | |
| | 1.002 | 63.4 | 12 | | 7.0 | SHOULDER |
| | 1.097 | 89.8 | 12 | | 10.0 | SHOULDER |
| | 1.142 | 26.4 | 6 | R+ | 1.5 | |
| | 1.522 | 89.8 | 6 | R+ | 5.0 | |
| | 1.562 | 89.8 | 6 | R+ | 5.0 | |
| | 1.616 | 184.8 | 6 | R+ | 10.3 | |
| | 1.693 | 290.4 | 12 | | 32.3 | SHOULDER |
| | 2.796 | 42.2 | 12 | | 4.7 | |
| | 3.297 | 31.7 | 6 | R+ | 1.8 | |
| | 3.592 | 42.2 | 6 | R+ | 2.3 | |
| | 3.793 | 68.6 | 6 | R+ | 3.8 | |
| | 4.573 | 31.7 | 6 | L+ | 1.8 | |
| | 4.717 | 31.7 | 6 | L+ | 1.8 | |
| | 4.737 | 79.2 | 12 | | 8.8 | |
| | 4.752 | 79.2 | 6 | R+ | 4.4 | |
| | 4.857 | 95.0 | 6 | R+ | 5.3 | |
| | 4.948 | 221.8 | 12 | | 24.6 | |
| | 4.989 | 37.0 | 6 | L+ | 2.1 | |
| | 4.993 | 10.6 | 12 | | 1.2 | |
| | 4.995 | 10.6 | 6 | L+ | 0.6 | |
| | 5.024 | 169.0 | 12 | | 18.8 | |
| | 5.087 | 47.5 | 6 | L+ | 2.6 | |
| | 5.200 | 47.5 | 12 | | 5.3 | |
| | 5.206 | 21.1 | 6 | R+ | 1.2 | |
| | 5.263 | 132.0 | 6 | R+ | 7.3 | |
| | 5.304 | 15.8 | 12 | | 1.8 | |
| | 5.473 | 52.8 | 6 | L+ | 2.9 | |
| | 5.696 | 31.7 | 12 | | 3.5 | |
| | 5.707 | 21.1 | 6 | L+ | 1.2 | |
| | | | | SUBTOTAL | 307.4 | |

## REPLACE ASPHALT CONCRETE SURFACING

| | POST MILE | LENGTH (LF) | WIDTH (LF) | LEFT/RIGHT WHEEL PATH | REPLACE ASPHALT CONCRETE SURFACING (CY) | NOTES |
|---|---|---|---|---|---|---|
| WB (CONTINUED) | 6.277 | 58.1 | 6 | R+ | 3.2 | |
| | 6.287 | 52.8 | 12 | | 5.9 | |
| | 6.737 | 116.2 | 12 | | 12.9 | |
| | 6.754 | 58.1 | 6 | R+ | 3.2 | |
| | 8.241 | 163.7 | 6 | L+ | 9.1 | |
| | 8.387 | 26.4 | 6 | L+ | 1.5 | |
| | 9.157 | 31.7 | 6 | R+ | 1.8 | |
| | 9.187 | 52.8 | 6 | R+ | 2.9 | |
| | | | | SUBTOTAL | 40.5 | |
| | | | | SUBTOTAL | 444.1 | |
| | | | | SUBTOTAL | 307.4 | |
| | | | | TOTAL | 792.0 | |

## CRACK TREATMENT

| POST MILE BEGIN | POST MILE END | SIDE | CRACK TREATMENT (LNMI) |
|---|---|---|---|
| 0.0 | 9.7 | R+ | 9.7 |
| 0.0 | 9.7 | L+ | 9.7 |
| | | TOTAL | 19.4 |

## SUMMARY OF QUANTITIES

Q-3

STATE OF CALIFORNIA - DEPARTMENT OF TRANSPORTATION
Caltrans MAINTENANCE DESIGN

FUNCTIONAL SUPERVISOR: RONALD S. SYKES
CALCULATED-DESIGNED BY: CHARLES WOOTEN
CHECKED BY: RONALD S. SYKES
REVISED BY
DATE REVISED

LAST REVISION 00-00-00
DATE PLOTTED => 20-MAR-2012
TIME PLOTTED => 14:42

| Dist | COUNTY | ROUTE | POST MILES TOTAL PROJECT | SHEET No. | TOTAL SHEETS |
|---|---|---|---|---|---|
| 03 | Nev | 174 | 0.0/10.2 | 14 | 26 |

H. Golban 3-19-12
REGISTERED ELECTRICAL ENGINEER DATE

3-26-12
PLANS APPROVAL DATE

REGISTERED PROFESSIONAL ENGINEER H. GOLBAN No. E17928 Exp 9-30-12 ELECTRICAL STATE OF CALIFORNIA

*THE STATE OF CALIFORNIA OR ITS OFFICERS OR AGENTS SHALL NOT BE RESPONSIBLE FOR THE ACCURACY OR COMPLETENESS OF SCANNED COPIES OF THIS PLAN SHEET.*

## LOCATIONS OF CONSTRUCTION

| Loc | Co | ROUTE | POST MILES (PM) | LOOPS (TYPE A) | PULL BOX (No. 6) | LOCATION DESCRIPTION |
|---|---|---|---|---|---|---|
| 1 | Nev | 174 | 0.04 | 2 | 1 | COUNT STATION ( CS 870) |
| 2 | Nev | 174 | 6.66 | 2 | 1 | COUNT STATION ( CS 873) |

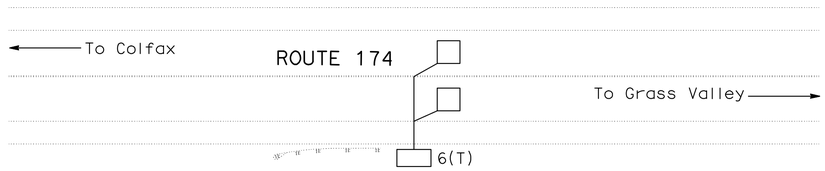


LOCATION 1

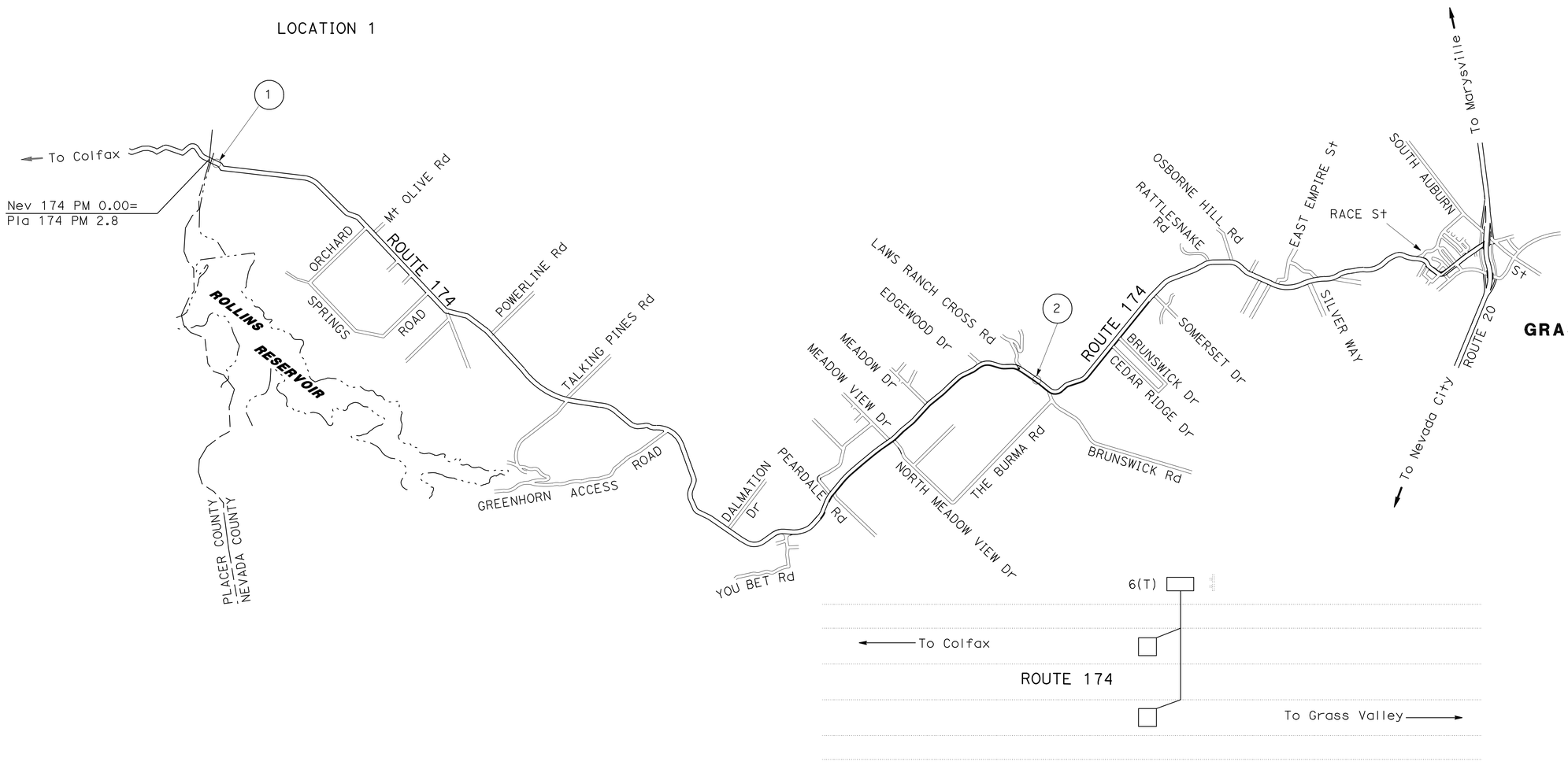


LOCATION 2

# TRAFFIC MONITORING STATION (COUNT)

NO SCALE

*APPROVED FOR ELECTRICAL WORK ONLY*

**E-1**

STATE OF CALIFORNIA - DEPARTMENT OF TRANSPORTATION
Caltrans® **ELECTRICAL DESIGN**

FUNCTIONAL SUPERVISOR: NELSON LEE
CALCULATED-DESIGNED BY: HABBIB GOLBAN
CHECKED BY: OANH D. NGUYEN
REVISED BY
DATE REVISED

LAST REVISION 03-19-12
DATE PLOTTED => 20-MAR-2012
TIME PLOTTED => 14:42

| Dist | COUNTY | ROUTE | POST MILES TOTAL PROJECT | SHEET No. | TOTAL SHEETS |
|---|---|---|---|---|---|
| 03 | Nev | 174 | 0.0/10.2 | 15 | 26 |

H. Golban 3-19-12
REGISTERED ELECTRICAL ENGINEER DATE

3-26-12
PLANS APPROVAL DATE

REGISTERED PROFESSIONAL ENGINEER H. GOLBAN No. E17928 Exp 9-30-12 ELECTRICAL STATE OF CALIFORNIA

*THE STATE OF CALIFORNIA OR ITS OFFICERS OR AGENTS SHALL NOT BE RESPONSIBLE FOR THE ACCURACY OR COMPLETENESS OF SCANNED COPIES OF THIS PLAN SHEET.*

**NOTE:**

1. FOR INSTALLATION TYPE A AND TYPE D LOOPS SEE DETAIL A AND DETAIL B

## PROJECT NOTES (THIS SHEET ONLY)

1 EXIST PG&E SERVICE PULL BOX

2 EXIST TYPE 332 CONTROLLER CABINET

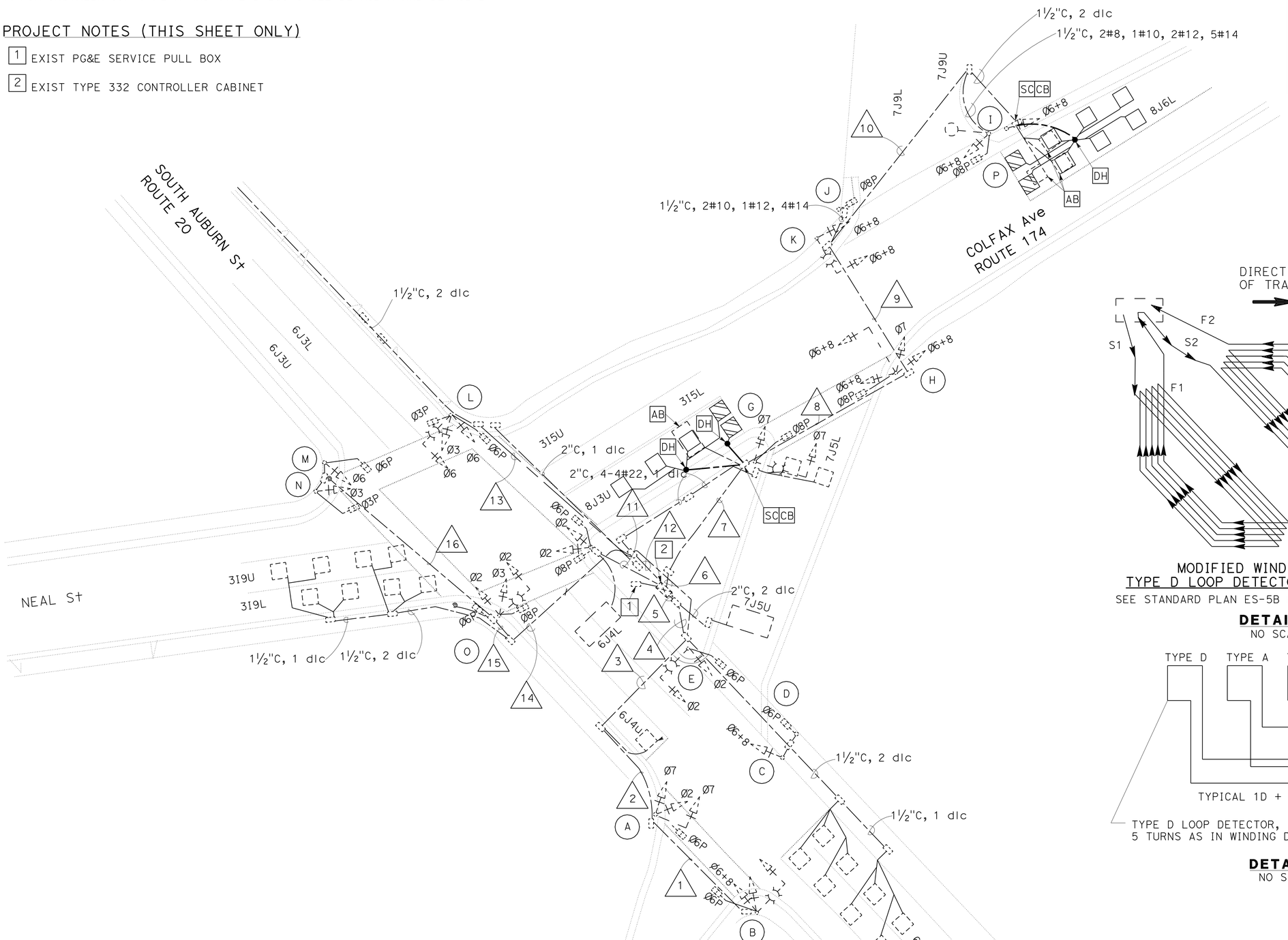


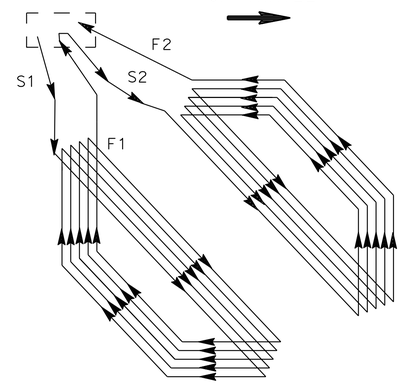


MODIFIED WINDING DETAIL
TYPE D LOOP DETECTOR CONFIGURATION
SEE STANDARD PLAN ES-5B FOR NOTES AND DETAILS

**DETAIL A**
NO SCALE

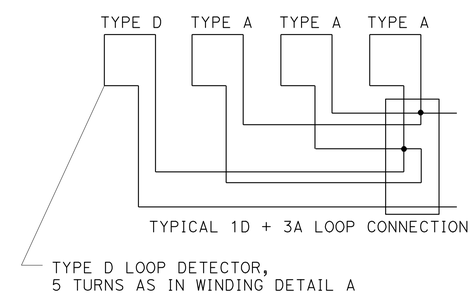


**DETAIL B**
NO SCALE

*APPROVED FOR ELECTRICAL WORK ONLY*

# MODIFY SIGNAL AND LIGHTING

SCALE: 1" = 20'

**E-2**

| REVISED BY | DATE REVISED |
|---|---|
| | |

| CALCULATED-DESIGNED BY | OANH D. NGUYEN |
|---|---|
| CHECKED BY | HABBIB GOLBAN |
| FUNCTIONAL SUPERVISOR | NELSON LEE |

STATE OF CALIFORNIA - DEPARTMENT OF TRANSPORTATION
Caltrans® ELECTRICAL DESIGN

LAST REVISION 03-19-12 | DATE PLOTTED => 20-MAR-2012 | TIME PLOTTED => 14:42

| Dist | COUNTY | ROUTE | POST MILES TOTAL PROJECT | SHEET No. | TOTAL SHEETS |
|---|---|---|---|---|---|
| 03 | Nev | 174 | 0.0/10.2 | 16 | 26 |

H. Golban 3-19-12
REGISTERED ELECTRICAL ENGINEER DATE

3-26-12
PLANS APPROVAL DATE

REGISTERED PROFESSIONAL ENGINEER — H. GOLBAN — No. E17928 — Exp. 9-30-12 — ELECTRICAL — STATE OF CALIFORNIA

THE STATE OF CALIFORNIA OR ITS OFFICERS OR AGENTS SHALL NOT BE RESPONSIBLE FOR THE ACCURACY OR COMPLETENESS OF SCANNED COPIES OF THIS PLAN SHEET.

# EXISTING CONDUCTOR SCHEDULE

| CONDUCTOR RUN | 1 (2"C) | | | | | | 2 (1½"C) | | | | | | 3 (2"C) | | | | | | 4 (2"C) | | | | | |
|---|---|---|---|---|---|---|---|---|---|---|---|---|---|---|---|---|---|---|---|---|---|---|---|---|
| CONDUCTORS | 8 | 10 | 12 | 14 | DLC | 4/22 | 8 | 10 | 12 | 14 | DLC | 4/22 | 8 | 10 | 12 | 14 | DLC | 4/22 | 8 | 10 | 12 | 14 | DLC | 4/22 |
| Ø2 SIGNAL | | | | | | | | | | 3 | | | | | | 3 | | | | | | 3 | | |
| Ø3 | | | | | | | | | | | | | | | | | | | | | | | | |
| Ø6 | | | | | | | | | | | | | | | | | | | | | | | | |
| Ø7 | | | | 3 | | | | | | 3 | | | | | | 3 | | | | | | 3 | | |
| Ø6+8 | | | | 3 | | | | | | 3 | | | | | | 3 | | | | | | 6 | | |
| Ø8 | | | | | | | | | | | | | | | | | | | | | | | | |
| Ø3P | | | | | | | | | | | | | | | | | | | | | | | | |
| Ø6P | | | | 2 | | | | | | 2 | | | | | | 2 | | | | | | 4 | | |
| Ø8P | | | | | | | | | | | | | | | | | | | | | | | | |
| SIGNAL NEUTRAL | | 1 | | | | | | 1 | | | | | | 1 | | | | | | 1 | | | | |
| Ø3 PPB | | | | | | | | | | | | | | | | | | | | | | | | |
| Ø6 PPB | | | 1 | | | | | | 1 | | | | | | 1 | | | | | | 1 | | | |
| Ø8 PPB | | | | | | | | | | | | | | | | | | | | | | | | |
| PPB NEUTRAL | | | 1 | | | | | | 1 | | | | | | 1 | | | | | | 1 | | | |
| Ø2 DETECTOR | | | | | | | | | | | | | | | | | | | | | | | | |
| Ø3 | | | | | | | | | | | | | | | | | | | | | | | | |
| Ø6 | | | | | | | | | | | | | | | | | 1 | | | | | | 1 | |
| Ø7 | | | | | | | | | | | | | | | | | | | | | | | | |
| Ø6+8 | | | | | | | | | | | | | | | | | | | | | | | | |
| Ø8 | | | | | | | | | | | | | | | | | | | | | | | | |
| PEC | | | | | | | | | | | | | | | | | | | | | | 3 | | |
| LIGHTING | 2 | | | | | | 2 | | | | | | 2 | | | | | | 2 | | | | | |
| SPARES | | | | 3 | | | | | | 3 | | | | | | 3 | | | | | | 3 | | |
| SERVICE | | | | | | | | | | | | | | | | | | | | | | | | |
| TOTAL | 2 | 1 | 2 | 11 | | | 2 | 1 | 2 | 14 | | | 2 | 1 | 2 | 14 | 1 | | 2 | 1 | 2 | 22 | 1 | |

| CONDUCTOR RUN | 5 (2"C) | | | | | | 6 (1½"C) | | | | | | 7 (1½"C) | | | | | | 8 (2"C) | | | | | |
|---|---|---|---|---|---|---|---|---|---|---|---|---|---|---|---|---|---|---|---|---|---|---|---|---|
| CONDUCTORS | 8 | 10 | 12 | 14 | DLC | 4/22 | 8 | 10 | 12 | 14 | DLC | 4/22 | 8 | 10 | 12 | 14 | DLC | 4/22 | 8 | 10 | 12 | 14 | DLC | 4/22 |
| Ø2 SIGNAL | | | | 3 | | | | | | | | | | | | | | | | | | | | |
| Ø3 | | | | | | | | | | | | | | | | | | | | | | | | |
| Ø6 | | | | | | | | | | | | | | | | | | | | | | | | |
| Ø7 | | | | 3 | | | | | | 3 | | | | | | 3 | | | | | | 3 | | |
| Ø6+8 | | | | 6 | | | | | | 6 | | | | | | 6 | | | | | | 6 | | |
| Ø8 | | | | | | | | | | | | | | | | | | | | | | | | |
| Ø3P | | | | | | | | | | | | | | | | | | | | | | | | |
| Ø6P | | | | 4 | | | | | | | | | | | | | | | | | | | | |
| Ø8P | | | | | | | | | | 2 | | | | | | 2 | | | | | | 2 | | |
| SIGNAL NEUTRAL | | 1 | | | | | | 1 | | | | | | 1 | | | | | | 1 | | | | |
| Ø3 PPB | | | | | | | | | | | | | | | | | | | | | | | | |
| Ø6 PPB | | | 1 | | | | | | | | | | | | | | | | | | | | | |
| Ø8 PPB | | | | | | | | | 1 | | | | | | 1 | | | | | | 1 | | | |
| PPB NEUTRAL | | | 1 | | | | | | 1 | | | | | | 1 | | | | | | 1 | | | |
| Ø2 DETECTOR | | | | | | | | | | | | | | | | | | | | | | | | |
| Ø3 | | | | | | | | | | | | | | | | | | | | | | | | |
| Ø6 | | | | | 1 | | | | | | | | | | | | | | | | | | | |
| Ø7 | | | | | 1 | | | | | | 2 | | | | | | 2 | | | | | | 2 | |
| Ø6+8 | | | | | | | | | | | | | | | | | | | | | | | | |
| Ø8 | | | | | | | | | | | 1 | | | | | | 1 | | | | | | | 2 |
| PEC | | | | 3 | | | | | | | | | | | | | | | | | | | | |
| LIGHTING | 2 | | | | | | 2 | | | | | | 2 | | | | | | 2 | | | | | |
| SPARES | | | | 3 | | | | | | 3 | | | | | | 3 | | | | | | 3 | | |
| SERVICE | | | | | | | | | | | | | | | | | | | | | | | | |
| TOTAL | 2 | 1 | 2 | 22 | 2 | | 2 | 1 | 2 | 14 | 3 | | 2 | 1 | 2 | 14 | 3 | | 2 | 1 | 2 | 14 | 2 | 2 |

| CONDUCTOR RUN | 9 (2"C) | | | | | | 10 (2"C) | | | | | | 11 (2"C) | | | | | | 12 (3"C) | | | | | |
|---|---|---|---|---|---|---|---|---|---|---|---|---|---|---|---|---|---|---|---|---|---|---|---|---|
| CONDUCTORS | 8 | 10 | 12 | 14 | DLC | 4/22 | 8 | 10 | 12 | 14 | DLC | 4/22 | 8 | 10 | 12 | 14 | DLC | 4/22 | 8 | 10 | 12 | 14 | DLC | 4/22 |
| Ø2 SIGNAL | | | | | | | | | | | | | | | | 3 | | | | | | 3 | | |
| Ø3 | | | | | | | | | | | | | | | | 3 | | | | | | 3 | | |
| Ø6 | | | | | | | | | | | | | | | | | | | | | | 6 | | |
| Ø7 | | | | | | | | | | | | | | | | | | | | | | | | |
| Ø6+8 | | | | 6 | | | | | | 3 | | | | | | | | | | | | | | |
| Ø8 | | | | | | | | | | | | | | | | 3 | | | | | | 3 | | |
| Ø3P | | | | | | | | | | | | | | | | 2 | | | | | | 4 | | |
| Ø6P | | | | | | | | | | | | | | | | 2 | | | | | | 4 | | |
| Ø8P | | | | 2 | | | | | | 2 | | | | | | 2 | | | | | | 4 | | |
| SIGNAL NEUTRAL | | 1 | | | | | | 1 | | | | | | 1 | | | | | | 2 | | | | |
| Ø3 PPB | | | | | | | | | | | | | | | 1 | | | | | | | 2 | | |
| Ø6 PPB | | | | | | | | | | | | | | | 1 | | | | | | | 2 | | |
| Ø8 PPB | | | 1 | | | | | | 1 | | | | | | | | | | | | | | | |
| PPB NEUTRAL | | | 1 | | | | | | 1 | | | | | | 1 | | | | | | | 2 | | |
| Ø2 DETECTOR | | | | | | | | | | | | | | | | | | | | | | | | |
| Ø3 | | | | | | | | | | | | | | | | | | | | | | | 3 | 3 |
| Ø6 | | | | | | | | | | | | | | | | | 1 | | | | | | 4 | |
| Ø7 | | | | | 2 | | | | | | 2 | | | | | | | | | | | | | 2 |
| Ø6+8 | | | | | | | | | | | | | | | | | | | | | | | | |
| Ø8 | | | | | | 2 | | | | | | 2 | | | | | | | | | | | | |
| PEC | | | | | | | | | | | | | | | | | | | | | | | | |
| LIGHTING | 2 | | | | | | 2 | | | | | | | | | | | | 4 | | | | | |
| SPARES | | | | 3 | | | | | | 3 | | | | | | | | | | | | 6 | | |
| SERVICE | | | | | | | | | | | | | | | | | | | | | | | | |
| TOTAL | 2 | 1 | 2 | 11 | 2 | 2 | 2 | 1 | 2 | 8 | 2 | 2 | | 1 | 3 | 15 | 1 | | 4 | 2 | | 39 | 7 | 5 |

| CONDUCTOR RUN | 13 (2½"C) | | | | | | 14 (2½"C) | | | | | | 15 (2½"C) | | | | | | 16 (2"C) | | | | | |
|---|---|---|---|---|---|---|---|---|---|---|---|---|---|---|---|---|---|---|---|---|---|---|---|---|
| CONDUCTORS | 8 | 10 | 12 | 14 | DLC | 4/22 | 8 | 10 | 12 | 14 | DLC | 4/22 | 8 | 10 | 12 | 14 | DLC | 4/22 | 8 | 10 | 12 | 14 | DLC | 4/22 |
| Ø2 SIGNAL | | | | | | | | | | 3 | | | | | | 3 | | | | | | | | |
| Ø3 | | | | 3 | | | | | | 3 | | | | | | 3 | | | | | | 3 | | |
| Ø6 | | | | 3 | | | | | | 3 | | | | | | 3 | | | | | | 3 | | |
| Ø7 | | | | | | | | | | | | | | | | | | | | | | | | |
| Ø6+8 | | | | | | | | | | | | | | | | | | | | | | | | |
| Ø8 | | | | 3 | | | | | | | | | | | | | | | | | | | | |
| Ø3P | | | | 2 | | | | | | 2 | | | | | | 2 | | | | | | | | |
| Ø6P | | | | 2 | | | | | | 2 | | | | | | 2 | | | | | | 2 | | |
| Ø8P | | | | 2 | | | | | | 2 | | | | | | 2 | | | | | | 2 | | |
| SIGNAL NEUTRAL | | 1 | | | | | | 1 | | | | | | 1 | | | | | | 1 | | | | |
| Ø3 PPB | | | | 1 | | | | | | 1 | | | | | | 1 | | | | | | 1 | | |
| Ø6 PPB | | | | 1 | | | | | | 1 | | | | | | 1 | | | | | | 1 | | |
| Ø8 PPB | | | | | | | | | | | | | | | | | | | | | | | | |
| PPB NEUTRAL | | | | 1 | | | | | | 1 | | | | | | 1 | | | | | | 1 | | |
| Ø2 DETECTOR | | | | | | | | | | | | | | | | | | | | | | | | |
| Ø3 | | | | | | | | | | | 2 | | | | | | | | | | | | | |
| Ø6 | | | | | 2 | | | | | | | | | | | | | | | | | | | |
| Ø7 | | | | | | | | | | | | | | | | | | | | | | | | |
| Ø6+8 | | | | | | | | | | | | | | | | | | | | | | | | |
| Ø8 | | | | | | | | | | | | | | | | | | | | | | | | |
| PEC | | | | | | | | | | | | | | | | | | | | | | | | |
| LIGHTING | 2 | | | | | | 2 | | | | | | 2 | | | | | | | | | | | |
| SPARES | | | | 3 | | | | | | 3 | | | | | | 3 | | | | | | | | |
| SERVICE | | | | | | | | | | | | | | | | | | | | | | | | |
| TOTAL | 2 | 1 | | 21 | 2 | | 2 | 1 | | 21 | 2 | | 2 | 1 | | 21 | | | | 1 | | 13 | | |

# EXISTING POLE SCHEDULE

| LOCATION | STANDARDS | SIGNALS Type | SIGNALS Mtg | PED SIGNAL Type | PED SIGNAL Mtg | NOTES |
|---|---|---|---|---|---|---|
| (A) | 16 | 1W3L / 2W3L | MAT / SV-2-T | 1W2L | SP-1-T | 12" Red Mast Arm indication |
| (B) | 17 | 1W3L / 2W3L | MAT / SV-2-T | 1W2L | SP-1 | 12" Red Mast Arm indication |
| (C) | I-B | 1W3L | A-1 | - | - | |
| (D) | I-B | - | - | 1W2L | TP-1 | 7'-0" Standard |
| (E) | 17 | 1W3L / 2W3L | MAT / SV-2-T | 1W2L | SP-1-T | 12" Red Mast Arm indication |
| (F) | I-B | 2W3L | A-4 | 2W2L | SP-2 | |
| (G) | 17 | 1W3L / 1W3L | MAT / SV-2-T | 1W2L | SP-1-T | 12" Red Mast Arm indication |
| (H) | 17 | 1W3L / 2W3L | MAT / SV-2-T | 1W2L | SP-1-T | 12" Red Mast Arm indication 18' Mast Arm |
| (I) | 15 | 1W3L | A-4 | 1W2L | SP-1 | |
| (J) | I-B | - | - | 1W2L | TP-1 | |
| (K) | 17 | 1W3L / 2W3L | MAT / SV-2-T | - | - | 12" Red Mast Arm indication |
| (L) | 3 | 1W3L / 2W3L | MAT / SV-2-T | 1W2L | SP-2-T | |
| (M) | I-B | 1W3L | TV-1 | 1W2L | SP-1 | |
| (N) | I-B | 1W3L | TV-1 | 1W2L | SP-1 | |
| (O) | 3 | 1W3L / 2W3L | MAT / SV-2-T | 1W2L | SP-2-T | |
| (P) | I-B | 1W3L | TV-1 | - | - | All 12" indications |

# MODIFY SIGNAL AND LIGHTING (CONDUCTOR, POLE AND EQUIPMENT SCHEDULES)

E-3

STATE OF CALIFORNIA - DEPARTMENT OF TRANSPORTATION
Caltrans® ELECTRICAL DESIGN

FUNCTIONAL SUPERVISOR: NELSON LEE
CALCULATED-DESIGNED BY: OANH D. NGUYEN
CHECKED BY: HABBIB GOLBAN
REVISED BY / DATE REVISED

LAST REVISION 03-19-12
DATE PLOTTED => 20-MAR-2012
TIME PLOTTED => 14:42

| DIST | COUNTY | ROUTE | POST MILES TOTAL PROJECT | SHEET NO. | TOTAL SHEETS |
|---|---|---|---|---|---|
| 03 | Nev | 174 | 0.0/10.2 | 17 | 26 |

Randell D. Hiatt
REGISTERED CIVIL ENGINEER

June 6, 2008
PLANS APPROVAL DATE

REGISTERED PROFESSIONAL ENGINEER
Randell D. Hiatt
No. C50200
Exp. 6-30-09
CIVIL
STATE OF CALIFORNIA

*The State of California or its officers or agents shall not be responsible for the accuracy or completeness of electronic copies of this plan sheet.*

*To accompany plans dated* 3-26-12

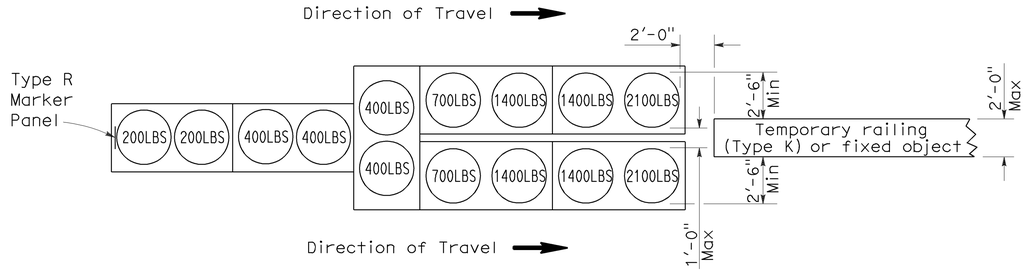


## ARRAY 'TU14'

Approach speed 45 mph or more

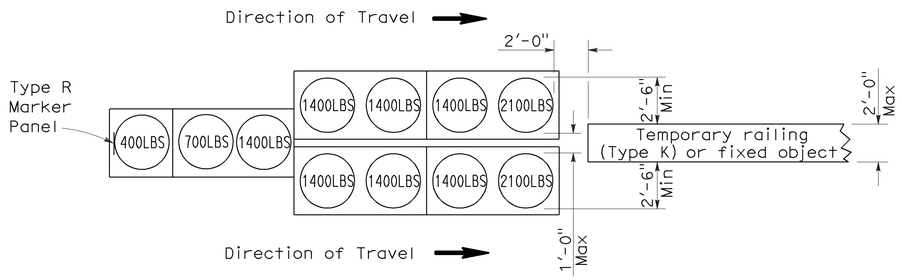


## ARRAY 'TU11'

Approach speed less than 45 mph

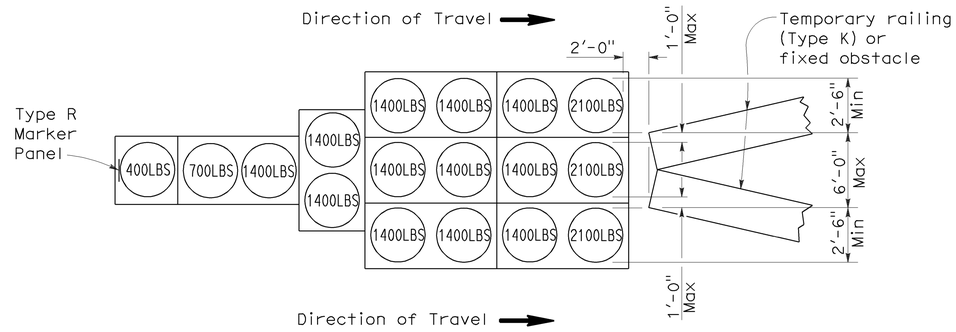


## ARRAY 'TU17'

Approach speed less than 45 mph

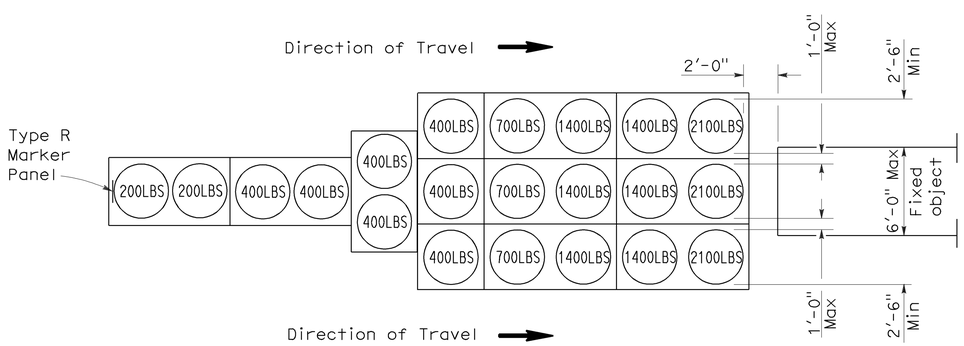


## ARRAY 'TU21'

Approach speed 45 mph or more

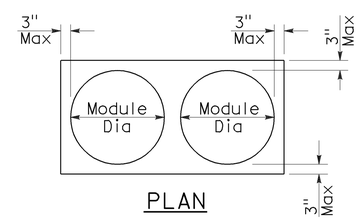


## PLAN

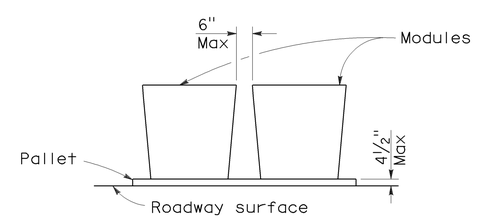


## ELEVATION

## CRASH CUSHION PALLET DETAIL

See Note 7

## NOTES:

1. (XXX) Indicates sand filled module location and weight of sand in pounds for each module. Module spacing is based on the greater diameter of the module.
2. All sand weights are nominal.
3. Temporary crash cushion arrays shall not encroach on the traveled way.
4. Place the top of Type R marker panel 1" below the module lid.
5. Refer to Standard Plan A73B for marker details.
6. Approach speeds indicated conform to NCHRP 350 Report criteria.
7. Use of pallets is optional.

STATE OF CALIFORNIA
DEPARTMENT OF TRANSPORTATION

# TEMPORARY CRASH CUSHION, SAND FILLED (UNIDIRECTIONAL)

NO SCALE

RSP T1A DATED JUNE 6, 2008 SUPERSEDES STANDARD PLAN T1A
DATED MAY 1, 2006 - PAGE 211 OF THE STANDARD PLANS BOOK DATED MAY 2006.

**REVISED STANDARD PLAN RSP T1A**

**2006 REVISED STANDARD PLAN RSP T1A**

| DIST | COUNTY | ROUTE | POST MILES TOTAL PROJECT | SHEET NO. | TOTAL SHEETS |
|---|---|---|---|---|---|
| 03 | Nev | 174 | 0.0/10.2 | 18 | 26 |

Randell D. Hiatt
REGISTERED CIVIL ENGINEER

June 6, 2008
PLANS APPROVAL DATE

REGISTERED PROFESSIONAL ENGINEER
Randell D. Hiatt
No. C50200
Exp. 6-30-09
CIVIL
STATE OF CALIFORNIA

*The State of California or its officers or agents shall not be responsible for the accuracy or completeness of electronic copies of this plan sheet.*

*To accompany plans dated* 3-26-12

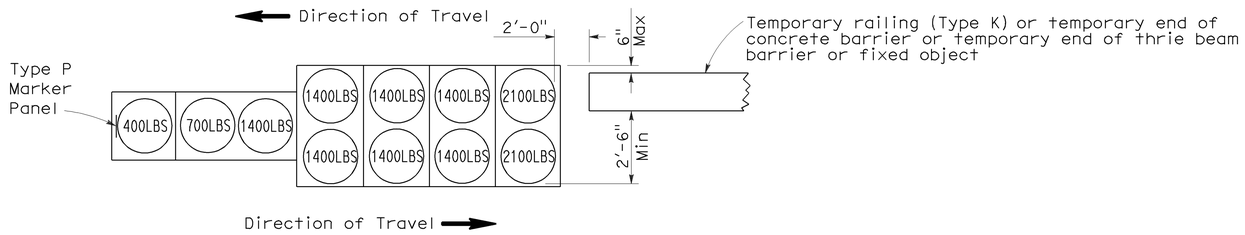


## ARRAY 'TB11'

Approach speed less than 45 mph

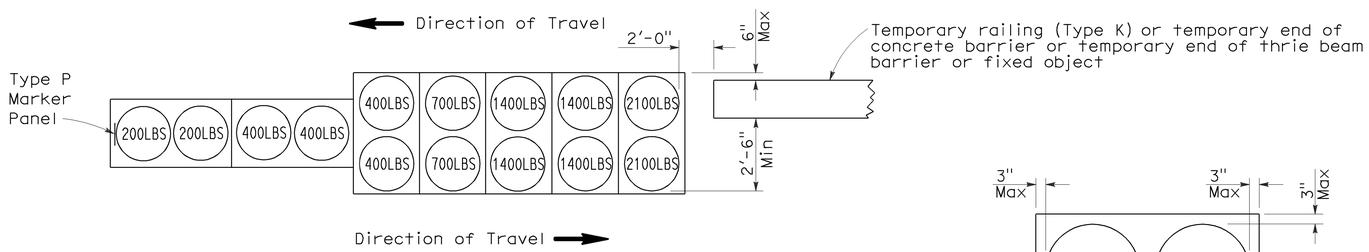


## ARRAY 'TB14'

Approach speed 45 mph or more

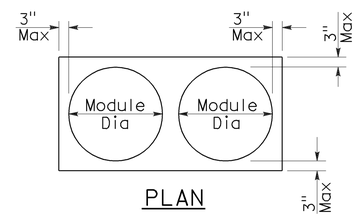


PLAN

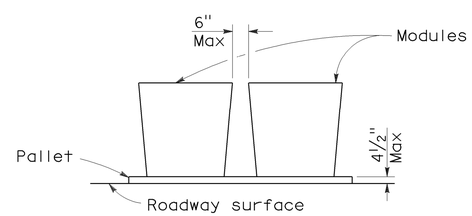


ELEVATION

## CRASH CUSHION PALLET DETAIL

See Note 7

## NOTES:

1. (XXX) Indicates sand filled module location and weight of sand in pounds for each module. Module spacing is based on the greater diameter of the module.
2. All sand weights are nominal.
3. Temporary crash cushion arrays shall not encroach on the traveled way.
4. Place the Type P marker panel so that the bottom of the panel rests upon the pallet.
5. Refer to Standard Plan A73B for marker details.
6. Approach speeds indicated conform to NCHRP 350 Report criteria.
7. Use of pallets is optional.

STATE OF CALIFORNIA
DEPARTMENT OF TRANSPORTATION

# TEMPORARY CRASH CUSHION, SAND FILLED (BIDIRECTIONAL)

NO SCALE

RSP T1B DATED JUNE 6, 2008 SUPERSEDES STANDARD PLAN T1B
DATED MAY 1, 2006 - PAGE 212 OF THE STANDARD PLANS BOOK DATED MAY 2006.

**REVISED STANDARD PLAN RSP T1B**

**2006 REVISED STANDARD PLAN RSP T1B**

5-15-08

| DIST | COUNTY | ROUTE | POST MILES TOTAL PROJECT | SHEET NO. | TOTAL SHEETS |
|---|---|---|---|---|---|
| 03 | Nev | 174 | 0.0/10.2 | 19 | 26 |

Randell D. Hiatt
REGISTERED CIVIL ENGINEER

June 6, 2008
PLANS APPROVAL DATE

REGISTERED PROFESSIONAL ENGINEER
Randell D. Hiatt
No. C50200
Exp. 6-30-09
CIVIL
STATE OF CALIFORNIA

*The State of California or its officers or agents shall not be responsible for the accuracy or completeness of electronic copies of this plan sheet.*

*To accompany plans dated* 3-26-12

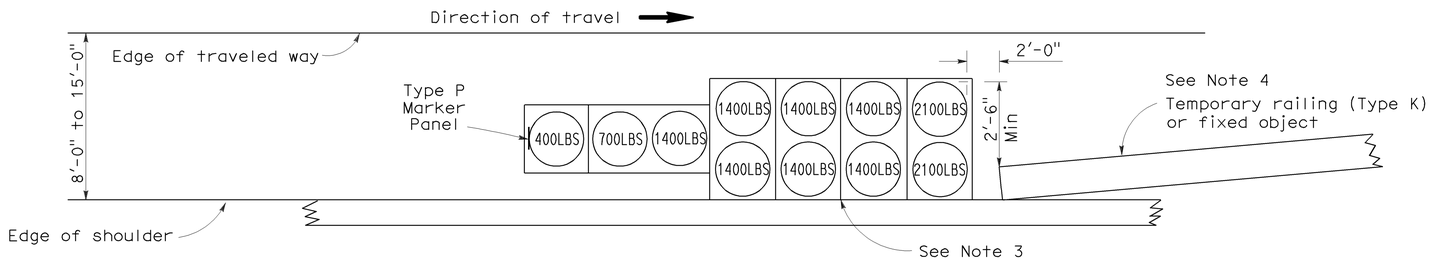


## ARRAY 'TS11'

Approach speed less than 45 mph
See Note 9

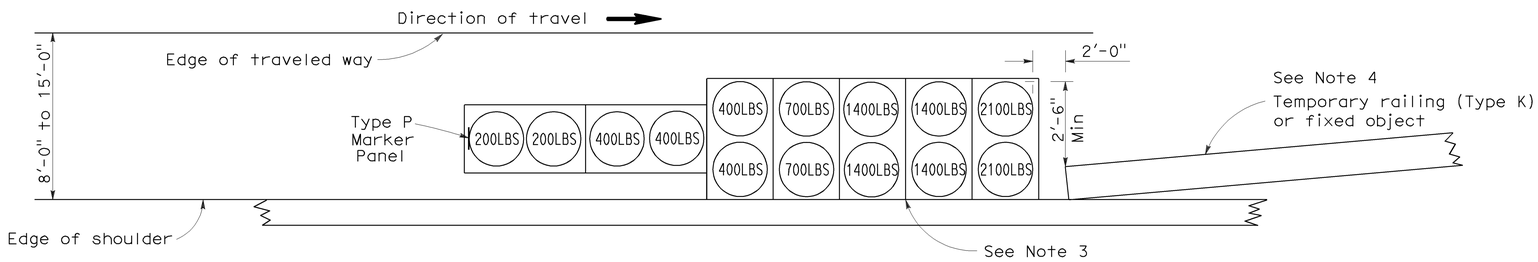


## ARRAY 'TS14'

Approach speed 45 mph or more
See Note 9

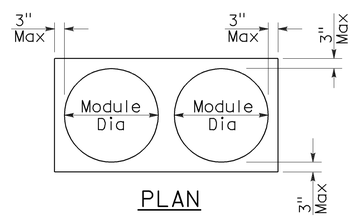


PLAN

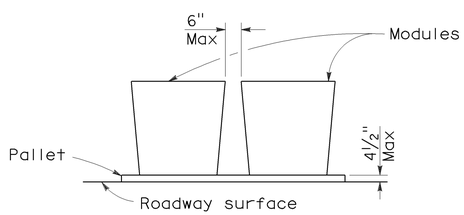


ELEVATION

## CRASH CUSHION PALLET DETAIL

See Note 11

## NOTES:

1. (XXX) Indicates sand filled module location and weight of sand in pounds for each module. Module spacing is based on the greater diameter of the module.
2. All sand weights are nominal.
3. The temporary crash cushion arrays shown on this plan shall be used only in locations where there will be traffic on one side of the temporary crash cushion array.
4. If the fixed object or approach end of the temporary railing is less than 15'-0" from the edge of traveled way, a temporary crash cushion is required in a construction or work zone.
5. Temporary crash cushion arrays shall not encroach on the traveled way.
6. Arrays for median shoulders shall conform to details shown on this plan for outside shoulders.
7. Place the Type P marker panel so that the bottom of the panel rests upon the pallet and faces traffic.
8. Refer to Standard Plan A73B for marker details.
9. For shoulder widths less than 8'-0", appropriate approved crash cushion protection, other than sand filled modules, shall be provided at fixed objects and at approach ends of temporary railing. The specific type of crash cushion shall be as shown on the project plans or as specified in the Special Provisions, or if not shown on the project plans or specified in the Special Provisions, shall be as approved by the Engineer.
10. Approach speeds indicated conform to NCHRP 350 Report criteria.
11. Use of pallets is optional.

STATE OF CALIFORNIA
DEPARTMENT OF TRANSPORTATION

# TEMPORARY CRASH CUSHION, SAND FILLED (SHOULDER INSTALLATIONS)

NO SCALE

RSP T2 DATED JUNE 6, 2008 SUPERSEDES STANDARD PLAN T2
DATED MAY 1, 2006 - PAGE 213 OF THE STANDARD PLANS BOOK DATED MAY 2006.

**REVISED STANDARD PLAN RSP T2**

**2006 REVISED STANDARD PLAN RSP T2**

5-15-08

| Dist | COUNTY | ROUTE | POST MILES TOTAL PROJECT | SHEET No. | TOTAL SHEETS |
|---|---|---|---|---|---|
| 03 | Nev | 174 | 0.0/10.2 | 20 | 26 |

Randell D. Hiatt
REGISTERED CIVIL ENGINEER

May 20, 2011
PLANS APPROVAL DATE

REGISTERED PROFESSIONAL ENGINEER
Randell D. Hiatt
No. C50200
Exp. 6-30-11
CIVIL
STATE OF CALIFORNIA

*The State of California or its officers or agents shall not be responsible for the accuracy or completeness of electronic copies of this plan sheet.*

*To accompany plans dated* 3-26-12

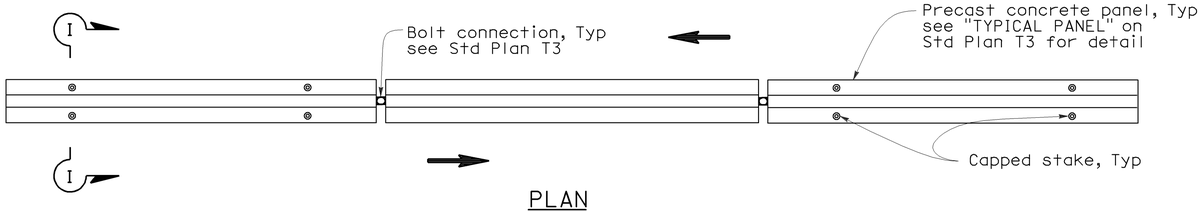


PLAN

RAILING STAKING CONFIGURATION FOR TWO-WAY TRAFFIC

See Note 1

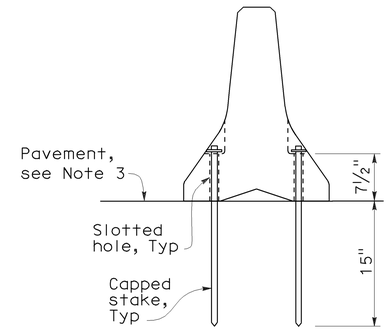


SECTION I-I

NOTES:

1. Where Type K Temporary Railing is placed as a temporary or long term barrier in two-way traffic on highways with less than 24" from the edge of traveled way, use four capped stakes per every other panel with end panels staked.
2. Where Type K Temporary Railing is placed 3" to 24" from the edge of an excavation on highways, use two capped stakes per panel along the traffic side.
3. Staked Type K Temporary Railing must be supported by at least 4" thick concrete, hot mix asphalt or existing asphalt concrete pavement.
4. The minimum yield strength for the washer must be 60,000 psi.
5. Direction of adjacent traffic indicated by ⟶.

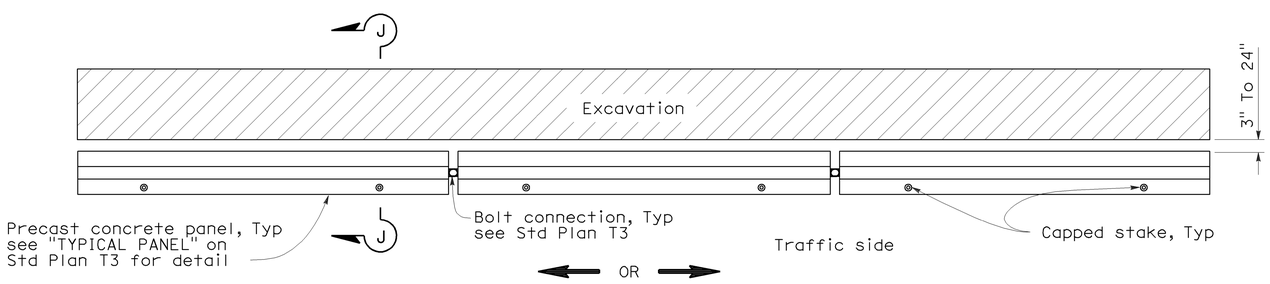


PLAN

RAILING STAKING CONFIGURATION ADJACENT TO AN EXCAVATION

See Note 2

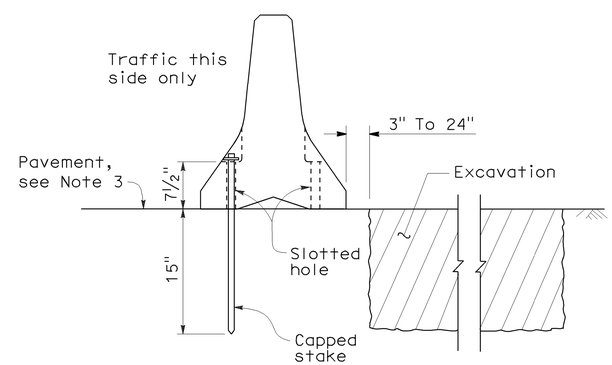


SECTION J-J

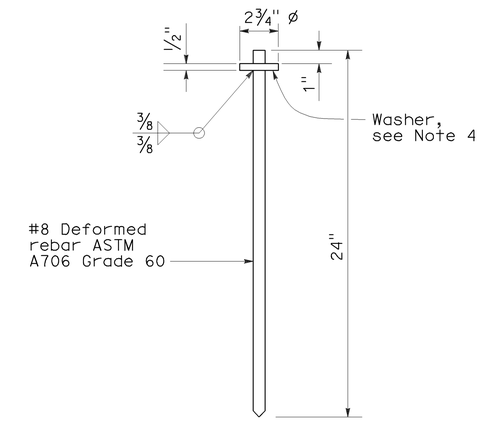


CAPPED STAKE DETAIL

STATE OF CALIFORNIA
DEPARTMENT OF TRANSPORTATION

# TEMPORARY RAILING (TYPE K)

NO SCALE

NSP T3A DATED MAY 20, 2011 SUPPLEMENTS
THE STANDARD PLANS BOOK DATED MAY 2006.

**NEW STANDARD PLAN NSP T3A**

2006 NEW STANDARD PLAN NSP T3A

| DIST | COUNTY | ROUTE | POST MILES TOTAL PROJECT | SHEET NO. | TOTAL SHEETS |
|---|---|---|---|---|---|
| 03 | Nev | 174 | 0.0/10.2 | 21 | 26 |

REGISTERED ELECTRICAL ENGINEER

October 5, 2007
PLANS APPROVAL DATE

REGISTERED PROFESSIONAL ENGINEER
Jeffery G. McRae
No. E14512
Exp. 6-30-08
ELECTRICAL
STATE OF CALIFORNIA

*The State of California or its officers or agents shall not be responsible for the accuracy or completeness of electronic copies of this plan sheet.*

*To accompany plans dated* 3-26-12

# ELECTROLIERS

| STANDARD TYPES |
|---|
| 15, 15D |
| 15 STRUCTURE |
| 21, 21D STRUCTURE |
| 30 |
| 31 |
| 32 |
| 35 |
| 36-20A |

High mast light pole

Double Arm lighting standard

Existing electrolier

Electrolier foundation (Future installation)

## NOTES:

1. Luminaires shall be 310 W HPS when installed on Type 21, 21D, 30, 31, 32, 35 and 36-20A Standards, unless otherwise specified. Luminaires shall be 200 W HPS when installed on other type standards or poles, unless otherwise specified.
2. Luminaires shall be the cutoff type, ANSI Type Ⅲ medium cutoff lighting distribution, unless otherwise specified.
3. Variations noted adjacent to symbol on project plans.

Electrolier (see project notes or project plans)

Luminaire on wood pole

# STANDARD NOTES:

- AB — Abandon. If applied to conduit, remove conductors.
- BC — Install pull box in existing conduit run.
- BP — Pedestrian barricade, type as indicated on plan.
- CB — Install conduit into existing pull box.
- CC — Connect new and existing conduit. Remove existing conductors and install conductors as indicated.
- CF — Conduit to remain for future use. Remove conductors. Install pull wire or rope.
- DH — Detector handhole.
- FA — Foundation to be abandoned.
- IS — Install sign on signal mast arm.
- NS — No slip base on standard.
- PEC — Photoelectric control.
- PEU — Photoelectric unit.
- RC — Equipment or material to be removed and become the property of the Contractor.
- RE — Remove electrolier, fuses and ballast. Tape ends of conductors.
- RL — Relocate equipment.
- RR — Remove and reuse equipment.
- RS — Remove and salvage equipment.
- SC — Splice new to existing conductors.
- SD — Service disconnect.
- SF — Standard to remain for future use. Remove luminaire, pole conductors, fuses and ballast.
- TSP — Telephone service point.

# ABBREVIATIONS AND EQUIPMENT DESIGNATIONS

| PROPOSED | EXISTING | |
|---|---|---|
| BBS | bbs | Battery backup system |
| BC | bc | Bolt circle |
| C | C | Conduit |
| CCTV | cctv | Closed circuit television |
| CKT | ckt | Circuit |
| CMS | cms | Changeable message sign |
| DLC | dlc | Loop detector lead-in cable |
| EMS | ems | Extinguishable message sign |
| EVC | evc | Emergency vehicle cable |
| EVD | evd | Emergency vehicle detector |
| FB | fb | Flashing beacon |
| FBCA | fbca | Flashing beacon control assembly |
| FBS | fbs | Flashing beacon with slip base |
| FO | fo | Fiber optic |
| G | G | Ground (Equipment Grounding Conductor) |
| GFCI | GFCI | Ground fault circuit interrupt |
| HAR | har | Highway advisory radio |
| HEX | hex | Hexagonal |
| HPS | hps | High pressure sodium |
| IISNS | iisns | Internally illuminated street name sign |
| ISL | isl | Induction sign lighting |
| LED | led | Light emitting diode |
| LMA | lma | Luminaire mast arm |
| LPS | lps | Low pressure sodium |
| LTG | ltg | Lighting |
| LUM | lum | Luminaire |
| MAT | mat | Mast arm mounting vehicle signal faces, top attachment |
| MAS | mas | Mast arm mounting vehicle signal faces, side attachment |
| MAS-4A | mas-4A | Mast arm mounting vehicle signal faces, side attachment - 4 signal section |
| MAS-4B | mas-4B | |
| MAS-4C | mas-4C | |
| MAS-5A | mas-5A | Mast arm mounting vehicle signal faces, side attachment - 5 signal section |
| MAS-5B | mas-5B | |
| MC | mc | Mercury contactor |
| M/M | m/m | Multiple to multiple transformer |
| MT | mt | Conduit with pull wire or rope only |
| MTG | mtg | Mounting |
| | mv | Mercury vapor lighting fixture |
| N | N | Neutral (Grounded Conductor) |
| NC | NC | Normally closed |
| NO | NO | Normally open |
| PB | pb | Pull box |
| PEC | pec | Photoelectric control (Type Ⅰ, Ⅱ, Ⅲ, Ⅳ or Ⅴ as shown) |
| PED | ped | Pedestrian |
| PEU | peu | Photoelectric unit |
| PPB | ppb | Pedestrian push button |
| RL | | Relocated equipment |
| RM | rm | Ramp metering |
| SB | sb | Slip base |
| SIC | sic | Signal interconnect cable |
| SIG | sig | Signal |
| SMA | sma | Signal mast arm |
| SNS | sns | Street name sign |
| SP | sp | Service point |
| TDC | tdc | Telephone demarcation cabinet |
| TMS | tms | Traffic monitoring station |
| TOS | tos | Traffic Operations System |
| VEH | veh | Vehicle |
| XFMR | xfmr | Transformer |
| COMM | comm | Communication |
| RWIS | rwis | Roadway weather information system |

# SOFFIT AND WALL MOUNTED LUMINAIRES

Pendant, 70 W HPS unless otherwise specified.

Flush, 70 W HPS unless otherwise specified.

Wall surface, 70 W HPS unless otherwise specified.

Existing soffit or wall luminaire to remain unmodified.

Existing soffit or wall luminaire to be modified as specified.

## NOTE:

Arrow indicates "street side" of luminaire.

STATE OF CALIFORNIA
DEPARTMENT OF TRANSPORTATION

# ELECTRICAL SYSTEMS (SYMBOLS AND ABBREVIATIONS)

NO SCALE

RSP ES-1A DATED OCTOBER 5, 2007 SUPERSEDES STANDARD PLAN ES-1A
DATED MAY 1, 2006 - PAGE 400 OF THE STANDARD PLANS BOOK DATED MAY 2006.

**REVISED STANDARD PLAN RSP ES-1A**

**2006 REVISED STANDARD PLAN RSP ES-1A**

| DIST | COUNTY | ROUTE | POST MILES TOTAL PROJECT | SHEET NO. | TOTAL SHEETS |
|---|---|---|---|---|---|
| 03 | Nev | 174 | 0.0/10.2 | 22 | 26 |

REGISTERED ELECTRICAL ENGINEER

October 5, 2007
PLANS APPROVAL DATE

REGISTERED PROFESSIONAL ENGINEER Jeffery G. McRae No. E14512 Exp. 6-30-08 ELECTRICAL STATE OF CALIFORNIA

*The State of California or its officers or agents shall not be responsible for the accuracy or completeness of electronic copies of this plan sheet.*

*To accompany plans dated* 3-26-12

## CONDUIT

| PROPOSED | EXISTING | |
|---|---|---|
| | | Lighting Conduit, unless otherwise indicated or noted |
| | | Traffic signal conduit |
| C | c | Communication conduit |
| T | t | Telephone conduit |
| F | f | Fire alarm conduit |
| FO | fo | Fiber optic conduit |
| | | Conduit termination (RSP ES-9A C) |
| R | r | Conduit riser in/on structure or service pole |

## SERVICE EQUIPMENT

| PROPOSED | EXISTING | |
|---|---|---|
| OH | oh | Overhead lines |
| U | U | Wood pole "U" indicates utility owned |
| | | Pole guy with anchor |
| | | Utility transformer - ground mounted |
| III | | Service equipment enclosure type |
| | | Service equipment enclosure door indicates front of enclosure |
| T | t | Telephone demarcation cabinet |

## POLE-MOUNTED SERVICE DESIGNATION

Type of installation

TYPE H SERVICE - 28'-10" ← Pole height above grade

## ILLUMINATED OVERHEAD SIGN

| PROPOSED | EXISTING | |
|---|---|---|
| | | Overhead sign - Single post |
| | | Overhead sign - Two post |
| | | Overhead sign - Mounted on structure |
| | | Overhead sign with electrolier |

## SIGNAL EQUIPMENT

| PROPOSED | EXISTING | |
|---|---|---|
| | | Pedestrian signal face |
| | | Pedestrian push button post |
| | | Pedestrian barricade |
| | | Vehicle signal face (with backplate, 3-Section: red, yellow and green) |
| | | Vehicle signal face with angle visors |
| PV | PV | Modifications of basic symbols: "L" indicates all non-arrow sections louvered "LG" indicates louvered green section only "PV" indicates 12" programmed visibility sections "8" indicates all 8" sections (only when specified) |
| | | Type 15TS and Vehicle signal face |
| | | Vehicle signal face with red, yellow and green left arrow sections |
| | | Vehicle signal face with red and yellow sections and up green arrow |
| | | Vehicle signal face (5 Section) with red, yellow and green sections and yellow and green right arrows |
| | | Type 1 Standard and attached vehicle signal faces |
| | | Standard with signal mast arm only and attached vehicle signal faces and internally illuminated street name sign |
| | | Type 33 Standard, Left-turn vehicle signal face and sign |
| | | Standard with luminaire and signal mast arms and attached vehicle signal faces |
| | | Cantilever flashing beacon Type 9 Frame, with a sign unless otherwise specified or indicated |
| | | Type 15-FBS Standard with two vehicle signal face sections with lens, backplate and visor with a sign |
| R | Y | Flashing beacon. One vehicle signal face section with lens, backplate and visor. "R" indicates red indication, "Y" indicates yellow indication |
| | | Controller assembly. Door indicates front of cabinet |

## SIGNAL EQUIPMENT Cont

| PROPOSED | EXISTING | |
|---|---|---|
| | | Guard post |
| | | Type 1 Standard with "Meter On" sign |
| | | Emergency Vehicle detector |

## NOTES:

1. All signal sections shall be 12" unless shown otherwise.
2. Signal heads shall be provided with backplates unless shown otherwise.
3. Signal indication shall be LED.

STATE OF CALIFORNIA
DEPARTMENT OF TRANSPORTATION

# ELECTRICAL SYSTEMS (SYMBOLS AND ABBREVIATIONS)

NO SCALE

RSP ES-1B DATED OCTOBER 5, 2007 SUPERCEDES STANDARD PLAN ES-1B DATED MAY 1, 2006 - PAGE 401 OF THE STANDARD PLANS BOOK DATED MAY 2006.

**REVISED STANDARD PLAN RSP ES-1B**

**2006 REVISED STANDARD PLAN RSP ES-1B**

7-10-07

| DIST | COUNTY | ROUTE | POST MILES TOTAL PROJECT | SHEET NO. | TOTAL SHEETS |
|---|---|---|---|---|---|
| 03 | Nev | 174 | 0.0/10.2 | 23 | 26 |

REGISTERED ELECTRICAL ENGINEER

October 5, 2007
PLANS APPROVAL DATE

REGISTERED PROFESSIONAL ENGINEER
Jeffery G. McRae
No. E14512
Exp. 6-30-08
ELECTRICAL
STATE OF CALIFORNIA

*The State of California or its officers or agents shall not be responsible for the accuracy or completeness of electronic copies of this plan sheet.*

*To accompany plans dated* 3-26-12

# EQUIPMENT IDENTIFICATION

## ILLUMINATED SIGN IDENTIFICATION NUMBER:

Sign No. 12345 — Sign number - Place on post or structure

10 ISL SCI 1.0

- 10 — Transformer rating (kVA)
- ISL — Number and type of fixtures
- SCI — Lighting control type

Do NOT place on standard or structure

## ELECTROLIER OR EQUIPMENT IDENTIFICATION NUMBER:

12345 - 15'-0"

- 15'-0" — Mast arm length, if shown. Do not place on standard or structure.
- 12345 — Equipment number - Place on standard or structure. Existing equipment numbers are shown in parenthesis

## CONDUIT AND CONDUCTOR IDENTIFICATION:

1½"C, 2#10, 15#14, 2 DLC

- 2#10, 15#14, 2 DLC — Number and size of conductors and cables
- 1½"C — Size of conduit in inches

| | |
|---|---|
| Ø1, Ø2, Ø2P, etc. | Traffic phase identification for signal faces, detectors and phase diagrams |
| 1 2 3 | Project note numbers |
| A B C | Equipment description, installation or item numbers |
| 1 2 3 | Conduit run numbers |

## SIGNAL AND LIGHTING STANDARD (TYPICAL DESIGNATION):

19A - 3 - 100

- 100 — Wind velocity = 100 mph
- 3 — Case 3 arm loading
- 19A — Standard type
- Standard Plan sheet number
- Detail number or letter

## MISCELLANEOUS EQUIPMENT

| PROPOSED | EXISTING | |
|---|---|---|
| CMS | cms | Changeable message sign |
| | | Closed circuit television camera |
| | | Highway advisory radio pole and antenna |
| EMS | ems | Extinguishable message sign |
| M V | m v | Detection device<br>M = Microwave sensor<br>V = Video image sensor |

## WIRING DIAGRAM LEGEND

| | |
|---|---|
| P | Pole |
| CB | Circuit breaker |
| A | Ampere |
| V | Volt |
| M | Metered |
| UM | Unmetered |
| NB | Neutral bus |
| GB | Ground bus |
| G | Equipment grounding conductor |
| N | Grounded conductor (Neutral) |

- External conductor
- Conductor or bus
- Tie point
- Contactor coil
- Contactor, Contact NO
- Terminal blocks
- Contactor, Contact NC
- Enclosure bond
- Grounding electrode
- Circuit breaker
- Receptacle

## PULL BOXES

PROPOSED EXISTING

Pull box-No. 5 unless otherwise indicated or noted.

3 — 9A(21)

Pull box-Additional designations or descriptions

- 3 = No. 3½ pull box
- 5 = No. 5 pull box
- 6 = No. 6 pull box
- 7 = No. 7 (Ceiling pull box)
- 8 = No. 8 (Pendant soffit pull box)
- 9 = No. 9 pull box
- 9A = No. 9A pull box

- (C) = Communications pull box
- (E) = Pull box with extension
- (S) = Sprinkler control pull box
- (21) = Anchor bolts and conduit for future installation of Type 21 Standard
- (T) = Traffic pull box

## VEHICLE DETECTORS

5 J 9 U

- U = Upper
- L = Lower
- 9 — Slot number in input file
- J — Input file (I or J)
- 5 — Phase

| PROPOSED | EXISTING | |
|---|---|---|
| | | Type A detector loop. Outline of sawcut shown. |
| | | Type B detector loop. Outline of sawcut shown. |
| | | Type C detector loop. Outline of sawcut shown. |
| | | Type D detector loop. Outline of sawcut shown. |
| | | Type E detector loop. Outline of sawcut shown. |
| | | Type Q detector loop. Outline of sawcut shown. |
| | | Magnetic detector |
| DH | dh | Detector handhole |
| | | Microwave or video detection zone |

STATE OF CALIFORNIA
DEPARTMENT OF TRANSPORTATION

# ELECTRICAL SYSTEMS (SYMBOLS AND ABBREVIATIONS)

NO SCALE

RSP ES-1C DATED OCTOBER 5, 2007 SUPERCEDES STANDARD PLAN ES-1C DATED MAY 1, 2006 - PAGE 402 OF THE STANDARD PLANS BOOK DATED MAY 2006.

**REVISED STANDARD PLAN RSP ES-1C**

**2006 REVISED STANDARD PLAN RSP ES-1C**

| DIST | COUNTY | ROUTE | POST MILES TOTAL PROJECT | SHEET NO. | TOTAL SHEETS |
|---|---|---|---|---|---|
| 03 | Nev | 174 | 0.0/10.2 | 24 | 26 |

REGISTERED ELECTRICAL ENGINEER

October 5, 2007
PLANS APPROVAL DATE

REGISTERED PROFESSIONAL ENGINEER Jeffery G. McRae No. E14512 Exp. 6-30-08 ELECTRICAL STATE OF CALIFORNIA

*The State of California or its officers or agents shall not be responsible for the accuracy or completeness of electronic copies of this plan sheet.*

*To accompany plans dated* 3-26-12

# LOOP INSTALLATION PROCEDURE

1. Loops shall be centered in lanes.
2. Saw slots in pavement for loop conductors as shown in details.
3. Distance between side of loop and a lead-in saw cut from adjacent detectors shall be 2'-0" minimum. Distance between lead-in saw cuts shall be 6" minimum.
4. Bottom of saw slot shall be smooth with no sharp edges.
5. Slots shall be washed until clean, blown out and thoroughly dried before installing loop conductors.
6. Adjacent loops on the same sensor unit channel shall be wound in opposite directions.
7. Identify and tag loop circuit pairs in the pull box with loop number, start (S) and finish (F) of conductor. Identify and tag lead-in-cable with sensor number and phase.
8. Install loop conductor in slot using a 3/16" to 1/4" thick wood paddle. Hold loop conductors with wood paddles (at the bottom of the sawed slot) during sealant placement.
9. No more than 2 twisted pairs shall be installed in one sawed slot.
10. Allow additional 5'-0" of slack length of conductor for the lead-in run to pull box.
11. The additional length of each conductor for each loop shall be twisted together into a pair (6 turns per 3'-4" minimum) before being placed in the slot and conduit leading to pull box.
12. Test each loop circuit for continuity, circuit resistance and insulation resistance at the pull box before filling slots.
13. Fill slots as shown in details.
14. Splice loop conductors to lead-in-cable. Splices shall be soldered.
15. End of lead-in-cable and Type 2 loop conductor shall be waterproofed prior to installing in conduit to prevent moisture from entering the cable.
16. Lead-in-cable shall not be spliced between the pull box and the controller cabinet terminals.
17. Test each loop circuit for continuity, circuit resistance and insulation resistance at the controller cabinet location.
18. Where loop conductors are not to be spliced to a lead-in-cable, the ends of the conductors shall be taped and waterproofed with electrical insulating coating.

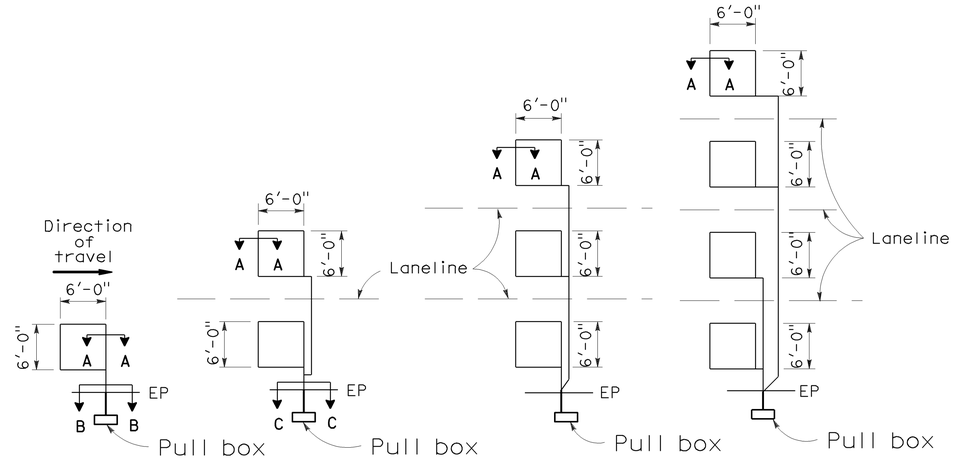


TYPE 1A INSTALLATION | TYPE 2A INSTALLATION | TYPE 3A INSTALLATION | TYPE 4A INSTALLATION

## SAWCUT DETAILS

(Type A loop detector configurations illustrated)

1. 1A thru 4A = 1 Type A loop configuration in each lane.
2. 1B thru 4B = 1 Type B loop configuration in each lane.
3. 1C = 1 Type C loop configuration entering lanes as required.
4. 1D thru 4D = 1 Type D loop configuration in each lane.
5. 1E thru 4E = 1 Type E loop configuration in each lane.
6. 1Q thru 4Q = 1 Type Q loop configuration in each lane. (Use Type A, B, C, D, E or Q loop detector configurations only when specified or shown on plans)

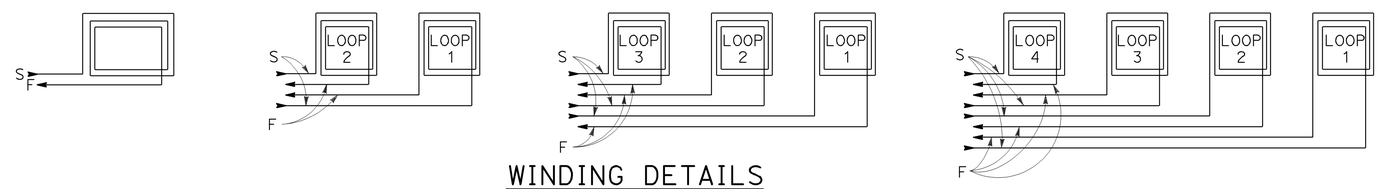


## WINDING DETAILS

See Notes 6 and 7

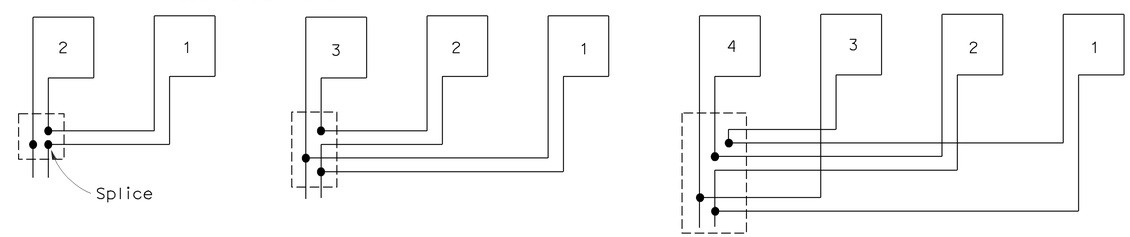


## TYPICAL LOOP CONNECTIONS

(Dashed lines represent the pull box)

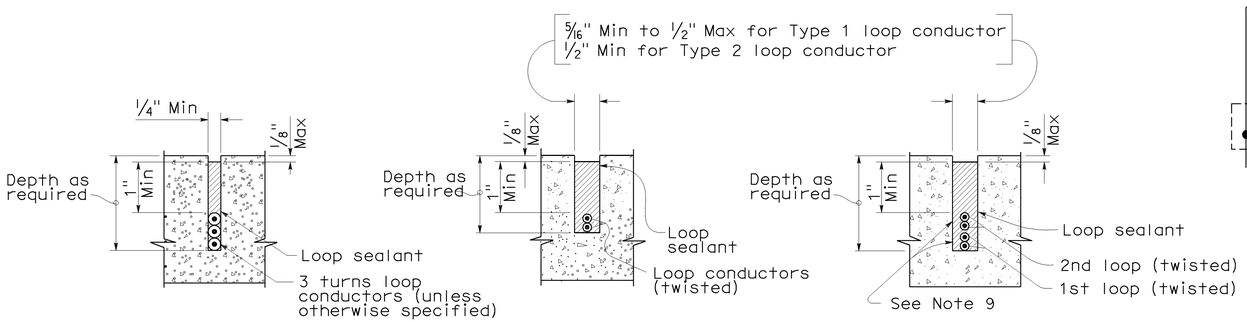


SECTION A-A | SECTION B-B | SECTION C-C

## SLOT DETAILS - TYPE 1 AND TYPE 2 LOOP CONDUCTOR

STATE OF CALIFORNIA
DEPARTMENT OF TRANSPORTATION

# ELECTRICAL SYSTEMS (DETECTORS)

NO SCALE

RSP ES-5A DATED OCTOBER 5, 2007 SUPERCEDES STANDARD PLAN ES-5A DATED MAY 1, 2006 - PAGE 423 OF THE STANDARD PLANS BOOK DATED MAY 2006.

**REVISED STANDARD PLAN RSP ES-5A**

**2006 REVISED STANDARD PLAN RSP ES-5A**

8-17-07

| DIST | COUNTY | ROUTE | POST MILES TOTAL PROJECT | SHEET NO. | TOTAL SHEETS |
|---|---|---|---|---|---|
| 03 | Nev | 174 | 0.0/10.2 | 25 | 26 |

REGISTERED ELECTRICAL ENGINEER

January 20, 2012
PLANS APPROVAL DATE

REGISTERED PROFESSIONAL ENGINEER
Jeffery G. McRae
No. E14512
Exp. 6-30-12
ELECTRICAL
STATE OF CALIFORNIA

*The State of California or its officers or agents shall not be responsible for the accuracy or completeness of electronic copies of this plan sheet.*

*To accompany plans dated* 3-26-12

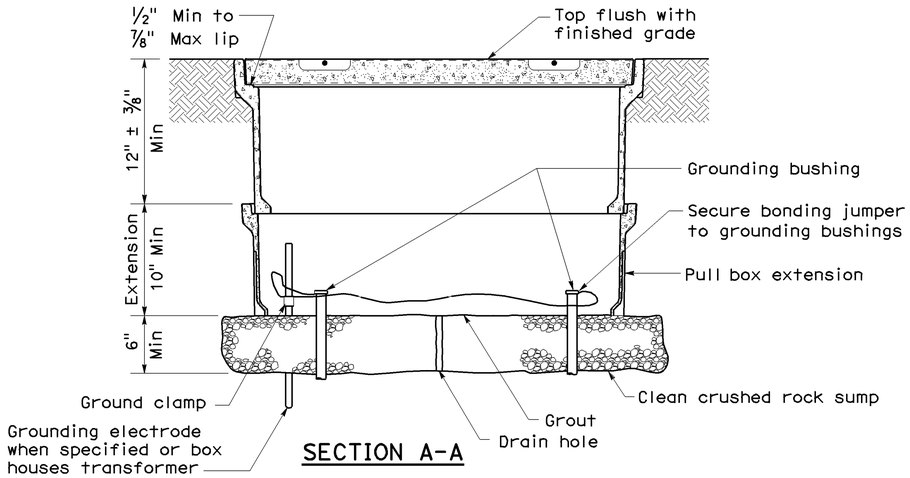


SECTION A-A

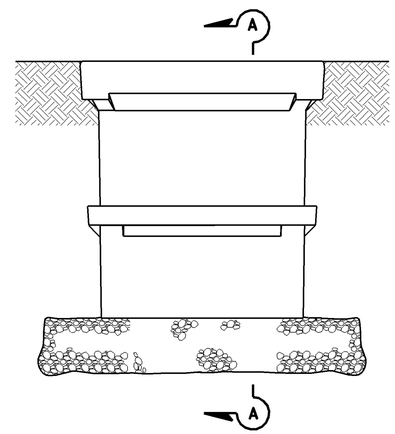


SIDE VIEW

## INSTALLATION DETAILS

### DETAIL A

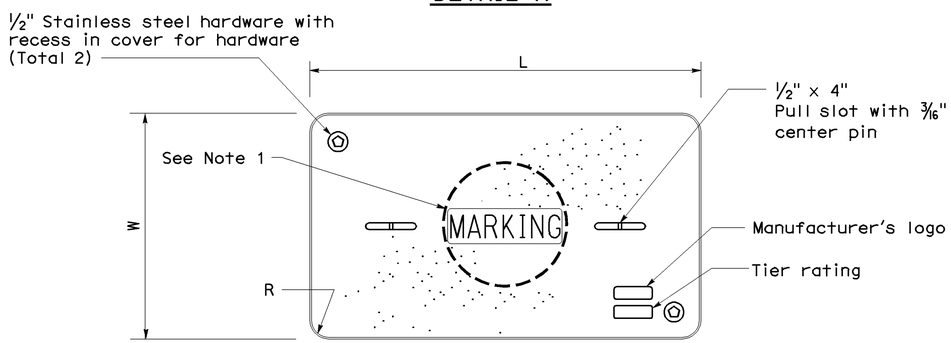


COVER TOP VIEW

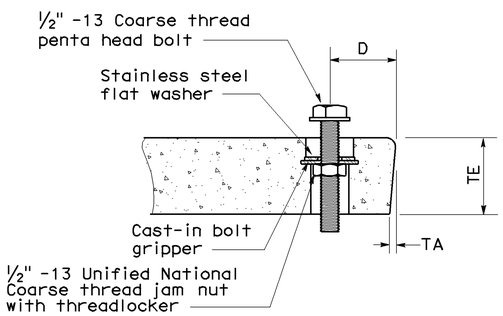


TYPICAL COVER CAPTIVE BOLT
(Or similar)

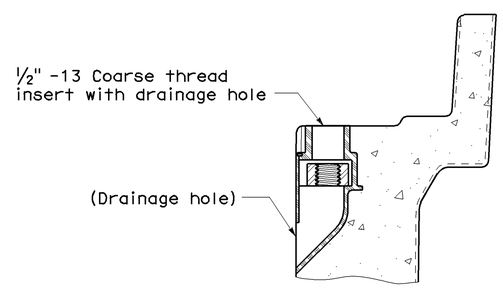


TYPICAL THREADED INSERT
(Or similar)

**DIMENSION TABLE**

| PULL BOX | PULL BOX | | | COVER | | | | | | |
|---|---|---|---|---|---|---|---|---|---|---|
| | Minimum Depth Box | Minimum Depth Extension | Maximum Weight | L | W | R | TE | TA | D | Maximum Weight |
| No. 3½ | 12" | N/A | 40 lb | 1' - 3⅜" | 10⅛" | 1⅜" | 2" | ⅛" | 1¾" | 30 lb |
| No. 5 | 12" | 10" | 55 lb | 1' - 11¼" | 1' - 1¾" | 1⅜" | 2" | ⅛" | 1¾" | 60 lb |
| No. 6 | 12" | 10" | 70 lb | 2' - 6½" | 1' - 5½" | 1⅜" | 2" | ⅛" | 2" | 85 lb |

## NOTES ON PULL BOXES:

1. Pull box covers must be marked as follows: "SERVICE" Service circuits between service point and service disconnect; "SPRINKLER-CONTROL" sprinkler control circuits, 50 V or less; "CALTRANS" on all pull boxes, except pull boxes marked "SPRINKLER-CONTROL"; and "TELEPHONE" Telephone service;

   A) No. 3½ pull box.
      1) "SIGNAL" - Traffic signal circuits with or without street or sign lighting circuits.
      2) "ST LIGHTING" - Street or sign lighting circuits where voltage is under 600 V.

   B) No. 5, 6, 9 or 9A pull box.
      1) "TRAFFIC SIGNAL" - Traffic signal circuits with or without street or sign lighting circuits.
      2) "STREET LIGHTING" - Street or sign lighting circuits where voltage is under 600 V.
      3) "STREET LIGHTING-HIGH VOLTAGE" - Street or sign lighting circuits where voltage is above 600 V.
      4) "IRRIGATION" - Circuits to irrigation controller 120 V or more.
      5) "RAMP METER" - Ramp meter circuits.
      6) "COUNT STATION" - Count or speed monitor circuits.
      7) "COMMUNICATIONS" - Communication circuits.
      8) "TOS COMMUNICATIONS" - TOS communication line.
      9) "TOS POWER" -TOS power.
      10) "TDC POWER" - Telephone demarcation cabinet power.
      11) "CCTV" - Closed circuit television circuits.
      12) "TMS" - Traffic monitoring station circuits.
      13) "CMS" - Changeable message sign circuits.
      14) "HAR" - Highway advisory radio circuits.

2. The nominal dimensions of the opening in which the cover sets must be the same as the cover dimensions (L and W) plus ⅛" or greater.

3. Covers and boxes must be interchangeable with California Standard. When interchanged with a standard, the top surfaces must be flush within ⅛". Top outside radius of covers and pull boxes must have a ⅛" radius.

4. Pull box extension may be another pull box as long as the bottom edge of the pull box can fit into the cover opening.

STATE OF CALIFORNIA
DEPARTMENT OF TRANSPORTATION

# ELECTRICAL SYSTEMS (PULL BOX)

NO SCALE

NSP ES-8A DATED JANUARY 20, 2012 SUPPLEMENTS THE STANDARD PLANS BOOK DATED MAY 2006.

**NEW STANDARD PLAN NSP ES-8A**

2006 NEW STANDARD PLAN NSP ES-8A

| DIST | COUNTY | ROUTE | POST MILES TOTAL PROJECT | SHEET NO. | TOTAL SHEETS |
|---|---|---|---|---|---|
| 03 | Nev | 174 | 0.0/10.2 | 26 | 26 |

REGISTERED ELECTRICAL ENGINEER

January 20, 2012
PLANS APPROVAL DATE

REGISTERED PROFESSIONAL ENGINEER
Jeffery G. McRae
No. E14512
Exp. 6-30-12
ELECTRICAL
STATE OF CALIFORNIA

*The State of California or its officers or agents shall not be responsible for the accuracy or completeness of electronic copies of this plan sheet.*

*To accompany plans dated* 3-26-12

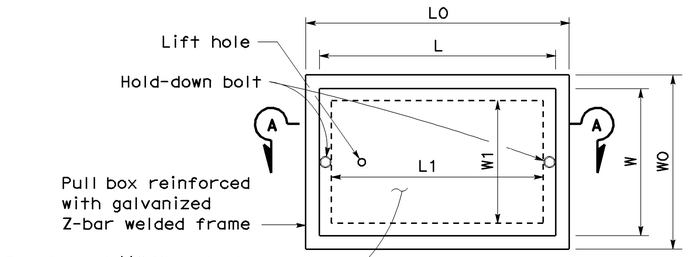


TOP VIEW

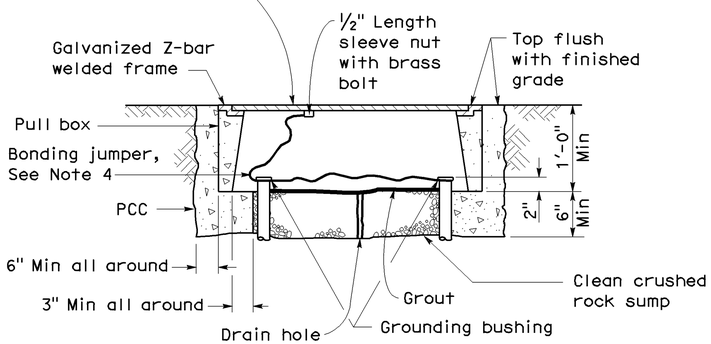


SECTION A-A

## No. 3½(T), No. 5(T) AND No. 6(T) TRAFFIC PULL BOX

## NOTES ON PULL BOXES:

1. Traffic pull box shall be provided with steel cover and special concrete footing. Steel cover shall have embossed non-skid pattern.
2. Steel reinforcing shall be as regularly used in the standard products of the respective manufacturer.
3. Pull box covers must be marked as follows: "SERVICE" Service circuits between service point and service disconnect; "SPRINKLER-CONTROL" Sprinkler control circuits, 50 V or less; "CALTRANS" On all pull boxes, except pull boxes marked "SPRINKLER-CONTROL"; and "TELEPHONE" Telephone service.
   A) No. 3½(T) pull box.
      1) "SIGNAL" - Traffic signal circuits with or without street or sign lighting circuits.
      2) "ST LIGHTING" - Street or sign lighting circuits where voltage is under 600 V.
   B) No. 5(T) or 6(T) pull box.
      1) "TRAFFIC SIGNAL" - Traffic signal circuits with or without street or sign lighting circuits.
      2) "STREET LIGHTING" - Street or sign lighting circuits where voltage is under 600 V.
      3) "STREET LIGHTING-HIGH VOLTAGE" - Street or sign lighting circuits where voltage is above 600 V.
      4) "IRRIGATION" - Circuits to irrigation controller 120 V or more.
      5) "RAMP METER" - Ramp meter circuits.
      6) "COUNT STATION" - Count or speed monitor circuits.
      7) "COMMUNICATION" - Communication circuits.
      8) "TOS COMMUNICATIONS" - TOS communications line.
      9) "TOS POWER" - TOS power.
      10) "TDC POWER" - Telephone demarcation cabinet power.
      11) "CCTV" - Closed circuit television circuits.
      12) "TMS" - Traffic monitoring station circuits.
      13) "CMS" - Changeable message sign circuits.
      14) "HAR" - Highway advisory radio circuits.
4. Bonding jumper for metal covers shall be 3' long, minimum.
5. The nominal dimensions of the opening in which the cover sets must be the same as the cover dimensions except the length and width dimensions shall be ⅛" greater.
6. Covers and boxes must be interchangeable with California standard male and female gages. When interchanged with a standard male or female gage, the top surfaces must be flush within ⅛".

### DIMENSION TABLE

| PULL BOX | BOX | | | | | | COVER | | | | |
|---|---|---|---|---|---|---|---|---|---|---|---|
| | Minimum * Thickness | Minimum Depth Box and Extension | WO | LO | L1 | W1 | L ** | W ** | R | Edge Thickness | Edge Taper |
| No. 3½(T) | 1½" | 1'-0" | 1'-5"± 1" | 1'-8⅞"± | 1'-2½"± | 10⅝"± 1" | 1'-8"± | 1'-1¾"± | 0" | ½" | None |
| No. 5(T) | 1¾" | 1'-0" | 1'-11½"± 1" | 2'-5½"± | 1'-7"± | 1'-1"± 1" | 2'-3"± | 1'-4"± | 0" | ½" | None |
| No. 6(T) | 2" | 1'-0" | 2'-6"± 1" | 2'-11½"± | 1'-11½"± | 1'-5"± 1" | 2'-9"± | 1'-8"± | 0" | ½" | None |

* Excluding conduit web ** Top dimension

STATE OF CALIFORNIA
DEPARTMENT OF TRANSPORTATION

# ELECTRICAL SYSTEMS (TRAFFIC RATED PULL BOX)

NO SCALE

NSP ES-8B DATED JANUARY 20, 2012 SUPPLEMENTS THE STANDARD PLANS BOOK DATED MAY 2006.

**NEW STANDARD PLAN NSP ES-8B**

**2006 NEW STANDARD PLAN NSP ES-8B**

9-28-11