DIST	COUNTY	ROUTE	POST MILES TOTAL PROJECT	SHEET No.	TOTAL SHEETS
03	NEV	80	R9.0, 28.1	11	27

REGISTERED CIVIL ENGINEER 9-17-13 DATE

3-3-14
PLANS APPROVAL DATE

REGISTERED PROFESSIONAL ENGINEER TIMOTHY J. POWELL No. C 61037 Exp. 12-31-14 CIVIL STATE OF CALIFORNIA

The State of California or its officers or agents shall not be responsible for the accuracy or completeness of electronic copies of this plan sheet.

NOTES: (APPLY TO ALL SHEETS)

Indicates existing.

THE CONTRACTOR SHALL VERIFY ALL CONTROLLING FIELD DIMENSIONS BEFORE ORDERING OR FABRICATING ANY MATERIAL.

STANDARD PLAN SHEET NUMBER
DETAIL NUMBER

NOTES: (APPLY TO THIS SHEET ONLY)

(1) Indicates location of remove spalled concrete, existing shear blocks, and restrainer cables, place structural concrete and install new restrainer cables. For details, see "PIER DETAILS NO.1" and "PIER DETAILS NO. 2" sheets.

(2) Indicates location of place temporary supports. For details, see "TEMPORARY SUPPORT TABLE" on "PIER DETAILS NO. 1" sheet.

Indicates limits of clean expansion joint and install new joint seal. Remove existing snow plow deflectors and replace with new snowplow deflectors. For details, see "SNOWPLOW DEFLECTOR DETAILS" sheet

Indicates the limits of remove 1" polyester concrete overlay, remove unsound concrete, prepare concrete bridge deck surface and place new 1" polyester concrete overlay. Match with existing deck grade.

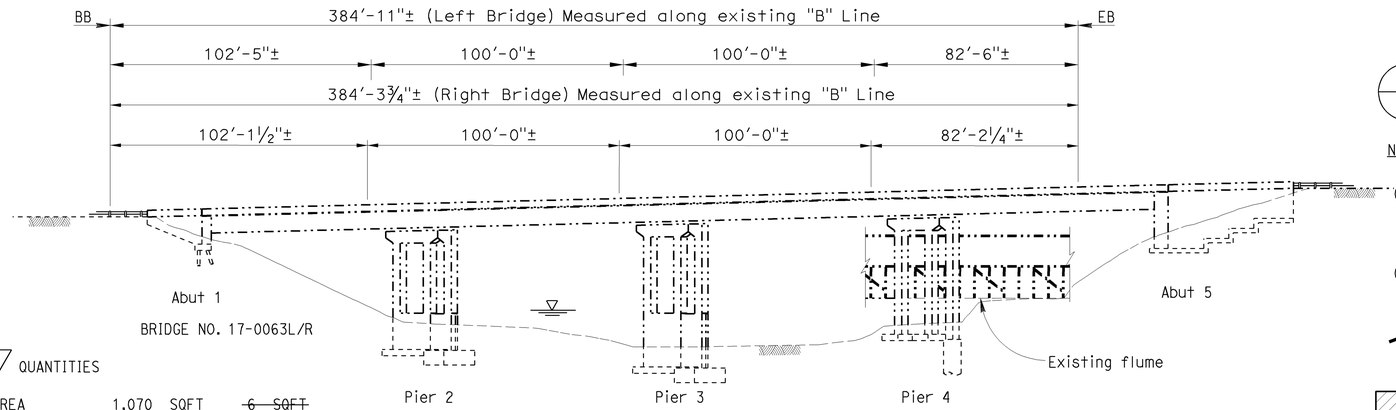

TRUCKEE RIVER BRIDGE

BRIDGE NO. 17-0063L/R

ELEVATION

1" = 30'

(1) QUANTITIES

REPAIR SPALLED SURFACE AREA	1,070	SQFT	~~6 SQFT~~
REMOVE POLYESTER CONCRETE OVERLAY	15,400	SQFT	~~8470 SQFT~~
REMOVE UNSOUND CONCRETE			77 CF
PREPARE CONCRETE BRIDGE DECK SURFACE	15,400	SQFT	~~8470 SQFT~~
FURNISH POLYESTER CONCRETE OVERLAY	1,540	CF	~~847 CF~~
PLACE POLYESTER CONCRETE OVERLAY	15,400	SQFT	~~8470 SQFT~~
BRIDGE REMOVAL (PORTION), LOCATION A			LUMP SUM
TEMPORARY SUPPORT			LUMP SUM
STRUCTURAL CONCRETE, BRIDGE			20 CY
DRILL AND BOND DOWEL			423 LF
DRILL AND BOND DOWEL (CHEMICAL ADHESIVE)			62 EA
CLEAN EXPANSION JOINT			334 LF
SNOWPLOW DEFLECTOR			55 EA
JOINT SEAL (MR½")			194 LF
JOINT SEAL (MR 1")			141 LF
BAR REINFORCING STEEL (EPOXY COATED)(BRIDGE)			6,056 LB
GALVANIC ANODES			143 EA
MISCELLANEOUS METAL (RESTRAINER - CABLE TYPE)			1,659 LB

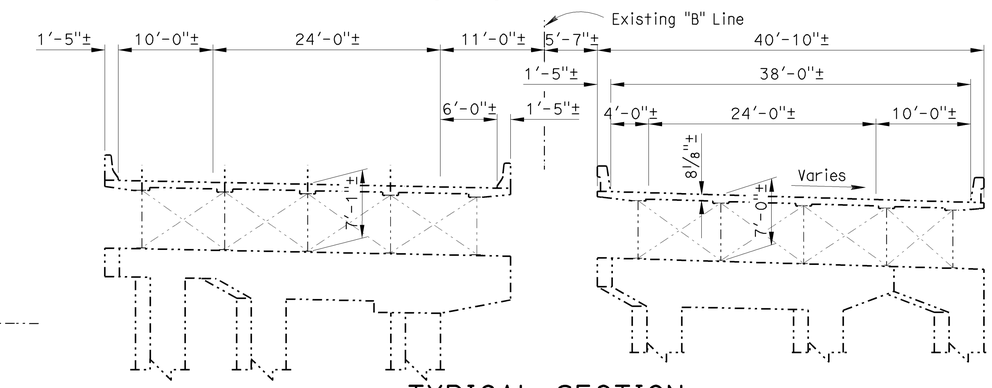

TYPICAL SECTION

BR. NO. 17-0063L/R
⅛" = 1'-0"

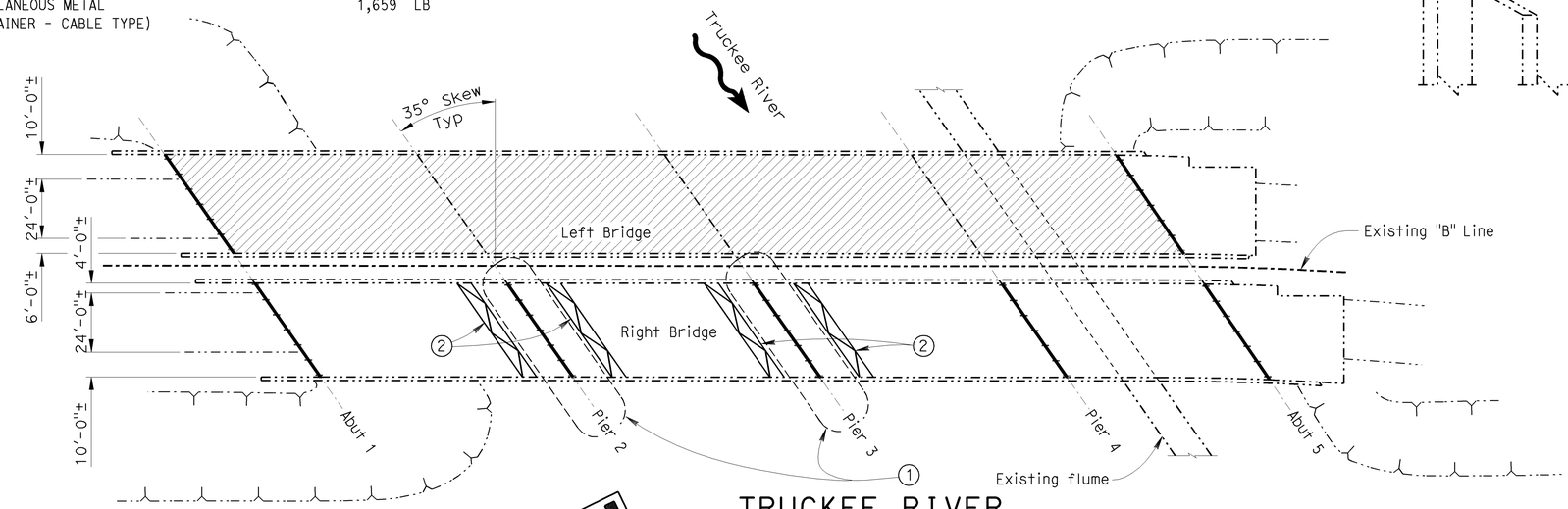

TRUCKEE RIVER

BR. NO. 17-0063L/R, RTE 80, NEV, PM 28
1"=30'

INDEX TO PLANS

SHEET NO.	TITLE
1	GENERAL PLAN NO. 1
2	GENERAL PLAN NO. 2
3	PIER DETAILS NO. 1
4	PIER DETAILS NO. 2
5	ABUTMENT DETAILS
6	BENT DETAILS NO. 1
7	BENT DETAILS NO. 2
8	BENT DETAILS NO. 3
9	BENT DETAILS NO. 4
10	CABLE RESTRAINER DETAILS NO. 1
11	CABLE RESTRAINER DETAILS NO. 2
12	CABLE RESTRAINER DETAILS NO. 3
13	CABLE RESTRAINER DETAILS NO. 4
14	CABLE RESTRAINER DETAILS NO. 5
15	CABLE RESTRAINER DETAILS NO. 6
16	SPALL REPAIR DETAILS
17	SNOWPLOW DEFLECTOR DETAILS

STANDARD PLANS DATED 2010

SHEET NO.	TITLE
A10A	ABBREVIATIONS (SHEET 1 OF 2)
RSP-A10B	ABBREVIATIONS (SHEET 2 OF 2)

(1) **REVISED PER ADDENDUM NO. 1 DATED APRIL 22, 2014**

9-17-13 DESIGN ENGINEER

	BY	CHECKED			
DESIGN	T. Powell	C. Hutchinson	LOAD FACTOR DESIGN	LIVE LOADING: HL93 AND PERMIT DESIGN LOAD	
DETAILS	M. Hallstrom	C. Hutchinson	LAYOUT	M. Hallstrom	C. Hutchinson
QUANTITIES	T. Powell	C. Hutchinson	SPECIFICATIONS	D. Klein	PLANS AND SPECS COMPARED D. Klein

STATE OF CALIFORNIA
DEPARTMENT OF TRANSPORTATION

DIVISION OF MAINTENANCE
STRUCTURE MAINTENANCE DESIGN

BRIDGE NO. 17-0063L/R
POST MILE 28

I-80 BRIDGES
GENERAL PLAN NO. 1

STRUCTURES MAINTENANCE GENERAL PLAN SHEET (ENGLISH) (REV. 09-01-10)

ORIGINAL SCALE IN INCHES FOR REDUCED PLANS 0 1 2 3

UNIT: 3488
PROJECT NUMBER & PHASE: 0312000186 1 CONTRACT NO.: 03-4M6101

DISREGARD PRINTS BEARING EARLIER REVISION DATES

REVISION DATES 2-5-13

SHEET 1 OF 17

FILE => addendum-03-4m6101_01gp-01.dgn

USERNAME => s124428 DATE PLOTTED => 18-APR-2014 TIME PLOTTED => 12:51

DIST	COUNTY	ROUTE	POST MILES TOTAL PROJECT	SHEET No.	TOTAL SHEETS
03	NEV	80	R9.0, 28.1	12	27

REGISTERED CIVIL ENGINEER 9-17-13 DATE

3-3-14
PLANS APPROVAL DATE

REGISTERED PROFESSIONAL ENGINEER TIMOTHY J. POWELL No. C 61037 Exp. 12-31-14 CIVIL STATE OF CALIFORNIA

The State of California or its officers or agents shall not be responsible for the accuracy or completeness of electronic copies of this plan sheet.

NOTES: (APPLY TO THIS SHEET ONLY)

(1) Indicates location of remove restrainer cables, repair spalled surface areas on bent caps, columns, and infill walls, place galvanic anodes and install new restrainer cables. For details, see "PIER DETAILS NO. 1, "CABLE RESTRAINER DETAILS NO. 1", "CABLE RESTRAINER DETAILS NO. 2", CABLE RESTRAINER DETAILS NO. 3" and "SPALL REPAIR DETAILS" sheets.

(2) Indicates location of remove restrainer cables, repair spalled surface areas on bent caps, columns, and infill walls, place galvanic anodes and install new restrainer cables. For details, see "BENT DETAILS NO. 3, "CABLE RESTRAINER DETAILS NO. 1", "CABLE RESTRAINER DETAILS NO. 2", CABLE RESTRAINER DETAILS NO. 3" and "SPALL REPAIR DETAILS" sheets.

(3) Indicates location of repair spalled surface areas on underside of soffit. Depth varies from ½" to 2". Approximate area = 75ft². For details, see "SPALL REPAIR DETAILS" sheet.

(4) Indicates location of repair spalled surface areas and place galvanic anodes on wingwall and girder pedestals. Approximate area = 40ft². For details, see "SPALL REPAIR DETAILS" sheet.

(5) Indicates location of place temporary supports. See "TEMPORARY SUPPORT TABLE" on SPALL REPAIR DETAILS sheet.

▽1 (6) Indicates location of remove unsound concrete and prepare polyester concrete overlay surface . Place new 1" polyester concrete overlay. Taper into existing approach pavement. For taper details see "TAPER DETAILS" on "SPALL REPAIR DETAILS" sheet.

Indicates limits of clean expansion joint and install new joint seal. Remove existing snow plow deflectors and replace with new snowplow deflectors. For details, see "SNOWPLOW DEFLECTOR DETAILS" sheet.

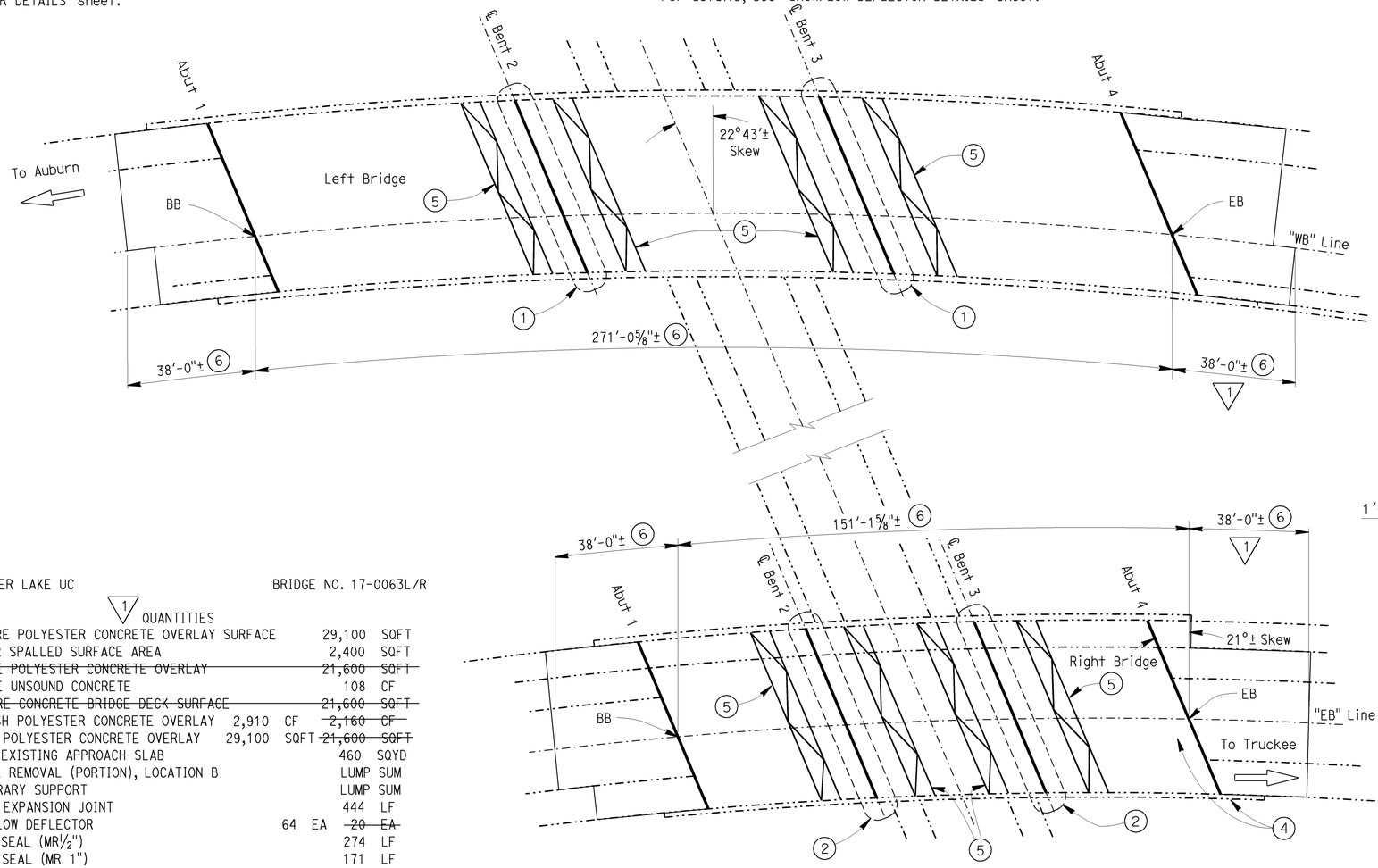

DONNER LAKE UC BRIDGE NO. 17-0063L/R

▽1 QUANTITIES

PREPARE POLYESTER CONCRETE OVERLAY SURFACE	29,100	SQFT
REPAIR SPALLED SURFACE AREA	2,400	SQFT
~~REMOVE POLYESTER CONCRETE OVERLAY~~	~~21,600~~	~~SQFT~~
REMOVE UNSOUND CONCRETE	108	CF
~~PREPARE CONCRETE BRIDGE DECK SURFACE~~	~~21,600~~	~~SQFT~~
FURNISH POLYESTER CONCRETE OVERLAY 2,910 CF	~~2,160~~	~~CF~~
PLACE POLYESTER CONCRETE OVERLAY 29,100 SQFT	~~21,600~~	~~SQFT~~
GRIND EXISTING APPROACH SLAB	460	SQYD
BRIDGE REMOVAL (PORTION), LOCATION B	LUMP	SUM
TEMPORARY SUPPORT	LUMP	SUM
CLEAN EXPANSION JOINT	444	LF
SNOWPLOW DEFLECTOR 64 EA	~~20~~	~~EA~~
JOINT SEAL (MR½")	274	LF
JOINT SEAL (MR 1")	171	LF
GALVANIC ANODES	425	EA
MISCELLANEOUS METAL (RESTRAINER - CABLE TYPE)	3,313	LB

DONNER LAKE UNDERCROSSING

BR. NO. 17-0076L/R, RTE 80, NEV, PM R9.07
1"=20'

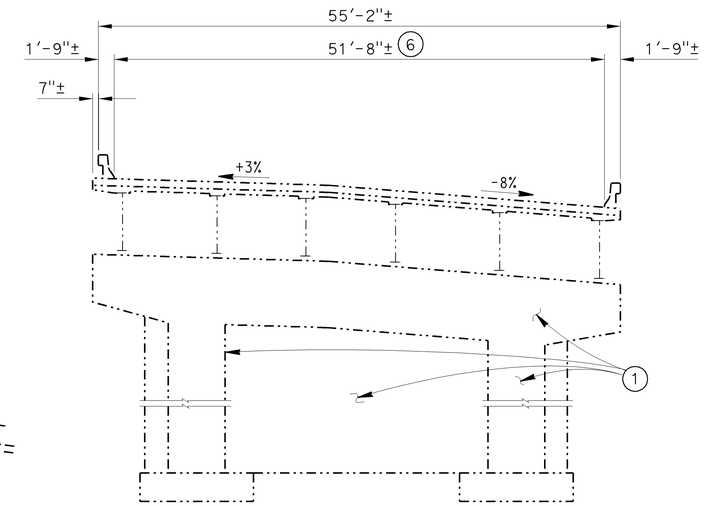

TYPICAL SECTION

BR. NO. 17-0076L, RTE 80, NEV, PM R9.07
⅛" = 1'-0"

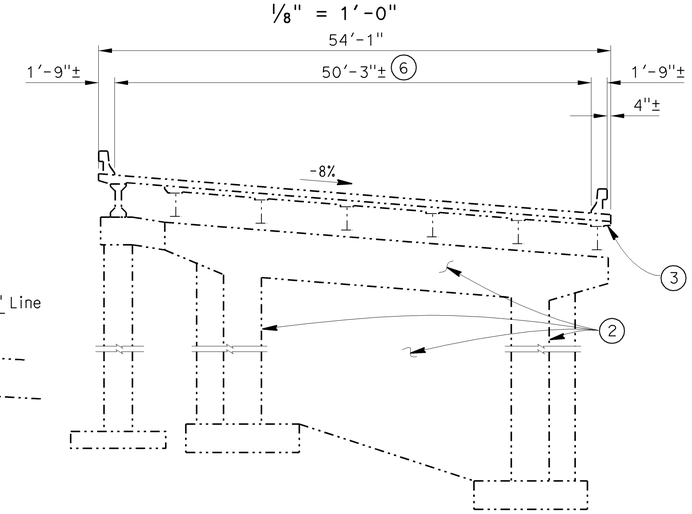

TYPICAL SECTION

BR. NO. 17-0076R, RTE 80, NEV, PM R9.07
⅛" = 1'-0"

▽1 **REVISED PER ADDENDUM NO. 1 DATED APRIL 22, 2014**

9-17-13 DESIGN ENGINEER

	BY	CHECKED		
DESIGN	T. Powell	C. Hutchinson	LOAD FACTOR DESIGN	LIVE LOADING: HS20-44 AND ALTERNATIVE AND PERMIT DESIGN LOAD
DETAILS	M. Hallstrom	C. Hutchinson	LAYOUT: M. Hallstrom	CHECKED: C. Hutchinson
QUANTITIES	T. Powell	C. Hutchinson	SPECIFICATIONS: D. Klein	PLANS AND SPECS COMPARED: D. Klein

STATE OF CALIFORNIA DEPARTMENT OF TRANSPORTATION

DIVISION OF MAINTENANCE STRUCTURE MAINTENANCE DESIGN

BRIDGE NO. 17-0076L/R POST MILE R9.07

I-80 BRIDGES
GENERAL PLAN NO. 2

STRUCTURES MAINTENANCE GENERAL PLAN SHEET (ENGLISH) (REV. 09-01-10)

ORIGINAL SCALE IN INCHES FOR REDUCED PLANS 0 1 2 3

UNIT: 3488
PROJECT NUMBER & PHASE: 0312000186 1 CONTRACT NO.: 03-4M6101

DISREGARD PRINTS BEARING EARLIER REVISION DATES

REVISION DATES 2-5-13 SHEET 2 OF 17

USERNAME => s124428 DATE PLOTTED => 18-APR-2014 TIME PLOTTED => 12:51

FILE => addendum-03-4m6101_02gp-02.dgn

DIST	COUNTY	ROUTE	POST MILES TOTAL PROJECT	SHEET No.	TOTAL SHEETS
03	NEV	80	R9.0, 28.1	26	27

REGISTERED CIVIL ENGINEER — DATE 9-17-13

PLANS APPROVAL DATE 3-3-14

REGISTERED PROFESSIONAL ENGINEER — TIMOTHY J. POWELL — No. C 61037 — Exp. 12-31-14 — CIVIL — STATE OF CALIFORNIA

The State of California or its officers or agents shall not be responsible for the accuracy or completeness of electronic copies of this plan sheet.

TEMPORARY SUPPORT TABLE

BRIDGE	LOCATION		DL (k)	DL + [LL + I](k)	LATERAL LOAD (k)
17-0076L	BENT 2	EAST SIDE	606	766	30
		WEST SIDE	606	766	30
17-0076L	BENT 3	EAST SIDE	606	766	30
		WEST SIDE	606	766	30
17-0076R	BENT 2	EAST SIDE	314	464	16
		WEST SIDE	314	464	16
17-0076R	BENT 3	EAST SIDE	314	464	16
		WEST SIDE	314	464	16

The maximum allowable transverse displacement of the superstructure measured at the bottom flanges of the girders relative to the base of the temporary support is 1". The differential vertical lift between jacks shall not exceed 1/16". The temporary support shall be jacked to provide a snug fit with the girders.

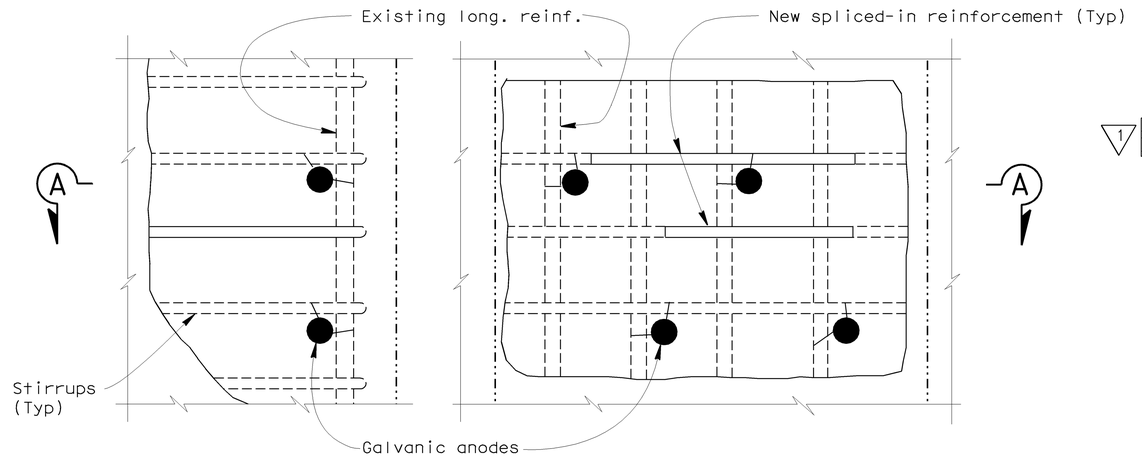

ELEVATION OF CORNER AND FACE REPAIRS

NO SCALE

NOTES: (APPLY TO THIS SHEET ONLY)

1 Indicates grind existing approach slab.

1. Ensure all exposed reinforcement is clean and securely fastened together with tie wire to provide good continuity.
2. Remove all rusted reinforcement and splice with new bars as directed by the Engineer. Clean all remaining exposed reinforcement to bare metal.
3. Attach galvanic anodes to clean reinforcement at spacing outlined in manufacturers guidelines.

GENERAL NOTES
LOAD FACTOR DESIGN

DESIGN:	BRIDGE DESIGN SPECIFICATIONS (1996 AASHTO with Interims and Revisions by CALTRANS)
DEAD LOAD:	Includes 35 psf for future wearing surface.
LIVE LOADING:	HL93 and permit design load.
STRUCTURAL SHOTCRETE:	fy = 60 ksi f'c = 3.6 ksi n = 8

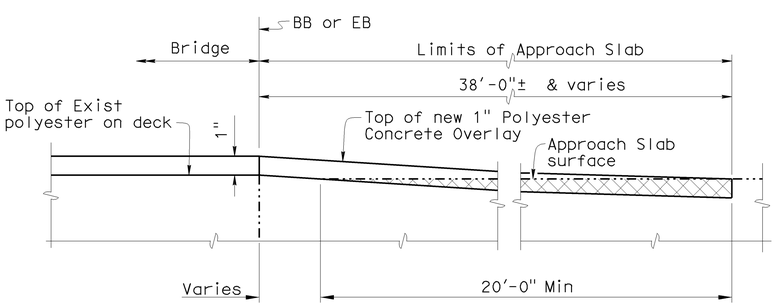

TAPER DETAIL

NO SCALE

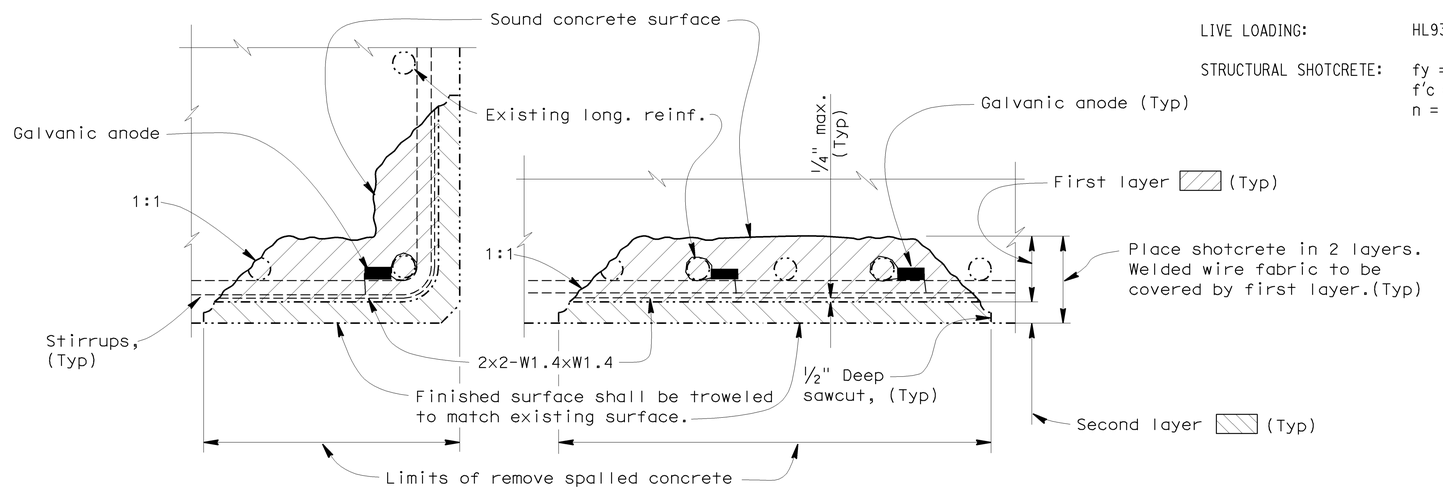

SECTION A-A

NO SCALE

1 **REVISED PER ADDENDUM NO. 1 DATED APRIL 22, 2014**

	BY	CHECKED
DESIGN	T. Powell	C. Hutchinson
DETAILS	M. Hallstrom	C. Hutchinson
QUANTITIES	T. Powell	C. Hutchinson

STATE OF CALIFORNIA DEPARTMENT OF TRANSPORTATION

DIVISION OF MAINTENANCE STRUCTURE MAINTENANCE DESIGN

BRIDGE NO. 17-0076L/R

POST MILE R9.07

I-80 BRIDGES
SPALL REPAIR DETAILS

STRUCTURES MAINTENANCE DETAIL SHEET (ENGLISH) (REV. 09-01-10)

ORIGINAL SCALE IN INCHES FOR REDUCED PLANS 0 1 2 3

UNIT: 3488
PROJECT NUMBER & PHASE: 0312000186 1 CONTRACT NO.: 03-4M6101

DISREGARD PRINTS BEARING EARLIER REVISION DATES

REVISION DATES 2-28-13

SHEET 16 OF 17

FILE => addendum-03-4m6101_16spallrepair.dgn

USERNAME => s124428 DATE PLOTTED => 18-APR-2014 TIME PLOTTED => 12:51

DIST	COUNTY	ROUTE	POST MILES TOTAL PROJECT	SHEET No.	TOTAL SHEETS
03	NEV	80	R9.0, 28.1	27	27

REGISTERED CIVIL ENGINEER 9-17-13 DATE

3-3-14
PLANS APPROVAL DATE

REGISTERED PROFESSIONAL ENGINEER TIMOTHY J. POWELL No. C 61037 Exp. 12-31-14 CIVIL STATE OF CALIFORNIA

The State of California or its officers or agents shall not be responsible for the accuracy or completeness of electronic copies of this plan sheet.

1

JOINT SEAL TABLE

BRIDGE NAME	BRIDGE NUMBER	LOCATION	MINIMUM "MR" (inches)	APPROXIMATE LENGTH (feet)	EXISTING WATERSTOP	EXISTING SNOW PLOW DEFLECTORS (Yes/No)
TRUCKEE RIVER	17-0063L	Abut 1	½	50	No	Yes
		Abut 5	½	50	No	Yes
TRUCKEE RIVER	17-0063R	Abut 1	½	47	No	Yes
		Pier 2	1	47	No	Yes
		Pier 3	1	47	No	Yes
		Pier 4	1	47	No	Yes
		Abut 5	½	47	No	Yes
DONNER LAKE UNDERCROSSING	17-0076L	Abut 1	½	57	No	Yes
		Bent 2	1	57	No	Yes
		Bent 3	1	57	No	Yes
		Abut 4	1	57	No	Yes
DONNER LAKE UNDERCROSSING	17-0076R	Abut 1	½	54	No	Yes
		Bent 2	½	54	No	Yes
		Bent 3	½	54	No	Yes
		Abut 4	½	54	No	Yes

Note: Use compression seals only at all joint locations.

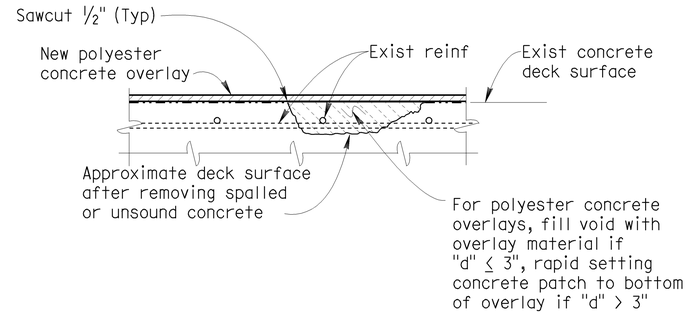

DECK REPAIR DETAIL

Reinforcement may be encountered during deck concrete removal.
NO SCALE

DECK REPAIR TABLE

BRIDGE NAME	BRIDGE NUMBER	DECK AREA (FT^2)	APPROXIMATE AREA DAMAGED (PERCENT)	APPROXIMATE DEPTH (INCHES)	AREA (FT^2)
TRUCKEE RIVER	17-0063L	15,397	2	3	308
DONNER LAKE UNDERCROSSING	17-0076L	14,005	2	3	280
DONNER LAKE UNDERCROSSING	17-0076R	7593	2	3	152

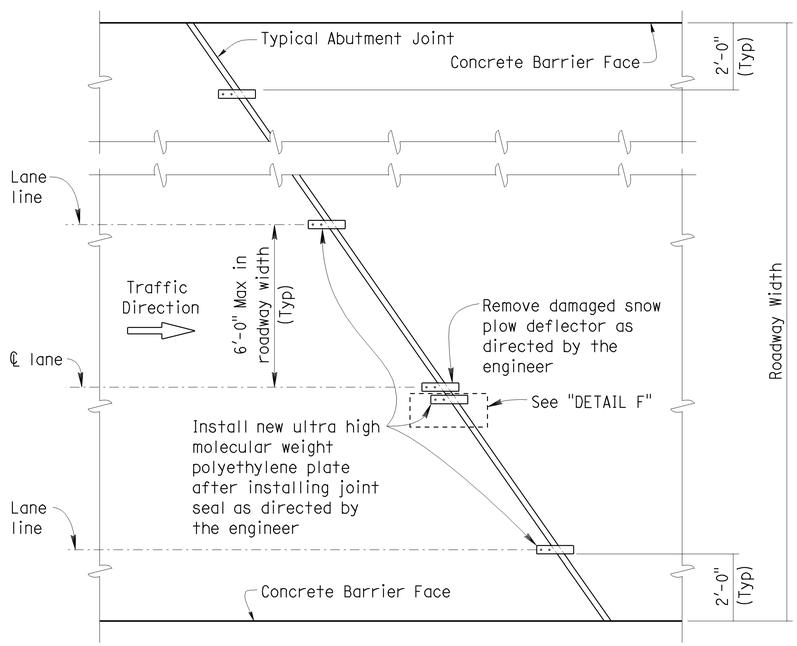

SNOWPLOW DEFLECTOR TYPICAL PLAN

NO SCALE

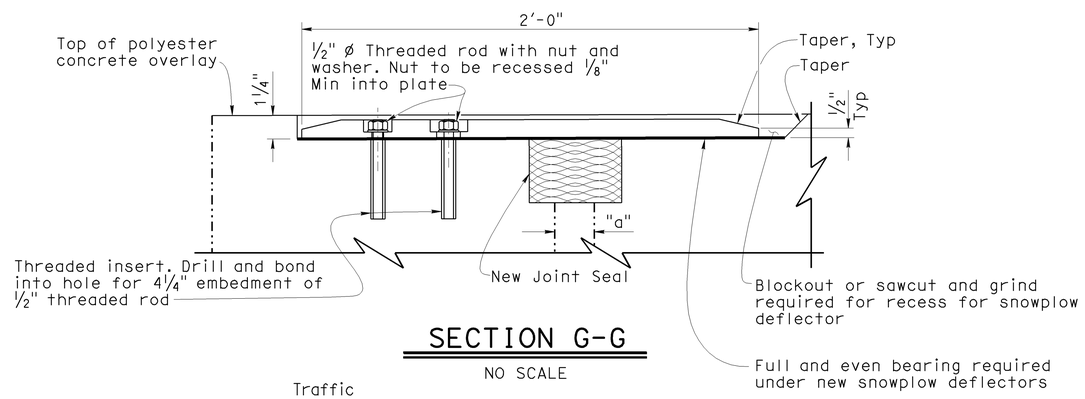

SECTION G-G

NO SCALE

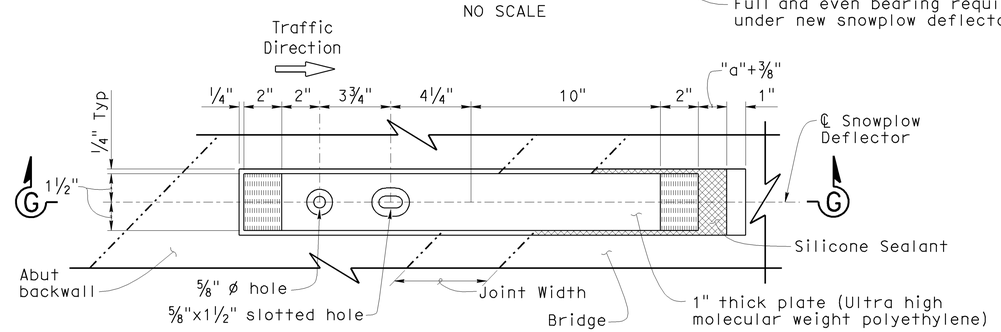

DETAIL F

NO SCALE

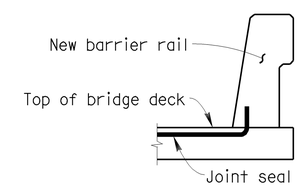

JOINT SEAL AT LOW SIDE OF DECK

DETAILS SHOWN FOR ILLUSTRATION PURPOSES ONLY.
FOR USE ONLY WHERE DECK JOINT MATCHES THE BARRIER RAIL JOINT.
NO SCALE

1 **REVISED PER ADDENDUM NO. 1 DATED APRIL 22, 2014**

	BY	CHECKED
DESIGN	T. Powell	C. Hutchinson
DETAILS	M. Hallstrom	C. Hutchinson
QUANTITIES	T. Powell	C. Hutchinson

STATE OF CALIFORNIA
DEPARTMENT OF TRANSPORTATION

DIVISION OF MAINTENANCE
STRUCTURE MAINTENANCE DESIGN

BRIDGE NO. 17-0063R
POST MILE 28

I-80 BRIDGES
SNOWPLOW DEFLECTOR DETAILS

STRUCTURES MAINTENANCE DETAIL SHEET (ENGLISH) (REV. 09-01-10)

ORIGINAL SCALE IN INCHES FOR REDUCED PLANS 0 1 2 3

UNIT: 3488
PROJECT NUMBER & PHASE: 0312000186 1 CONTRACT NO.: 03-4M6101

DISREGARD PRINTS BEARING EARLIER REVISION DATES

REVISION DATES 2-5-13 SHEET 17 OF 17

FILE => addendum-03-4m6101_17snow-deflector.dgn

USERNAME => s124428 DATE PLOTTED => 18-APR-2014 TIME PLOTTED => 12:51