Dist	COUNTY	ROUTE	POST MILES TOTAL PROJECT	SHEET No.	TOTAL SHEETS
04	SF	80	4.9/5.9	1	127

STATE OF CALIFORNIA

DEPARTMENT OF TRANSPORTATION

PROJECT PLANS FOR CONSTRUCTION ON

STATE HIGHWAY

IN THE COUNTY AND CITY OF SAN FRANCISCO FROM FIFTH STREET TO SAN FRANCISCO-OAKLAND BAY BRIDGE

TO BE SUPPLEMENTED BY STANDARD PLANS DATED MAY 2006

INDEX OF PLANS

SHEET No.	DESCRIPTION
1	TITLE AND LOCATION MAP
2	TYPICAL CROSS SECTIONS
3-4	LAYOUTS
5-24	CONSTRUCTION DETAILS
25-28	EROSION CONTROL PLANS AND QUANTITIES
29	CONTOUR GRADING
30-33	DRAINAGE PLANS, DETAILS AND QUANTITIES
34-45	UTILITY PLANS
46	CONSTRUCTION AREA SIGNS
47-49	SIGN PLANS AND QUANTITIES
50-52	SUMMARY OF QUANTITIES
53-57	RETAINING WALL PLANS
58-59	PLANT LIST
60-61	PLANT REMOVAL PLANS
62-65	PLANTING PLANS
66-68	IRRIGATION PLANS
69-78	LANDSCAPE DETAILS
79-80	IRRIGATION QUANTITIES
81-96	ELECTRICAL PLANS
97-127	REVISED AND NEW STANDARD PLANS

THE STANDARD PLANS LIST APPLICABLE TO THIS CONTRACT IS INCLUDED IN THE NOTICE TO BIDDERS AND SPECIAL PROVISIONS BOOK.

LOCATION MAP

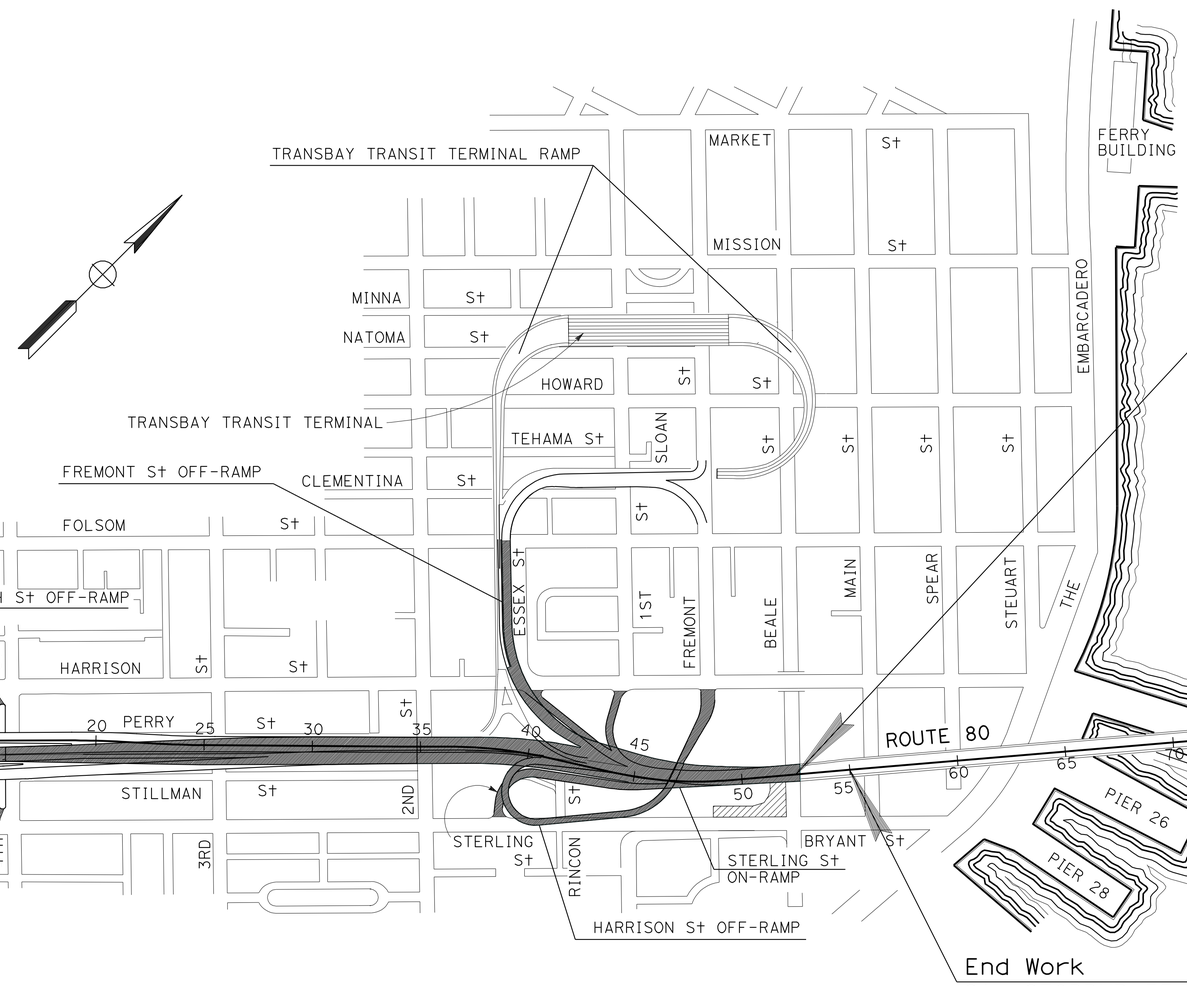

NO SCALE

THE CONTRACTOR SHALL POSSESS THE CLASS (OR CLASSES) OF LICENSE AS SPECIFIED IN THE "NOTICE TO BIDDERS."

LICENSED LANDSCAPE ARCHITECT

June 21, 2010
PLANS APPROVAL DATE

LICENSED LANDSCAPE ARCHITECT — KIMBERLY A. WHITE No. 4894 — Signature — 2-28-12 Renewal Date — 4-15-10 Date — STATE OF CALIFORNIA

THE STATE OF CALIFORNIA OR ITS OFFICERS OR AGENTS SHALL NOT BE RESPONSIBLE FOR THE ACCURACY OR COMPLETENESS OF SCANNED COPIES OF THIS PLAN SHEET.

PROJECT MANAGER: KEN TERPSTRA
SENIOR LANDSCAPE ARCHITECT: LORENA WONG

LAST REVISION 06-12-10 — DATE PLOTTED => 28-JUN-2010 — TIME PLOTTED => 07:15

CONTRACT No.	04-0435E4
PROJECT ID	0400000049

Dist	COUNTY	ROUTE	POST MILES TOTAL PROJECT	SHEET No.	TOTAL SHEETS
04	SF	80	4.9/5.9	2	127

REGISTERED CIVIL ENGINEER 4-15-10 DATE

6-21-10
PLANS APPROVAL DATE

REGISTERED PROFESSIONAL ENGINEER Nien Trinh No. 67739 Exp. 6-30-11 CIVIL STATE OF CALIFORNIA

THE STATE OF CALIFORNIA OR ITS OFFICERS OR AGENTS SHALL NOT BE RESPONSIBLE FOR THE ACCURACY OR COMPLETENESS OF SCANNED COPIES OF THIS PLAN SHEET.

NOTES:

1. DIMENSIONS OF THE PAVEMENT STRUCTURES (STRUCTURAL SECTIONS) ARE SUBJECT TO TOLERANCES SPECIFIED IN THE STANDARD SPECIFICATIONS.
2. SUPERELEVATION AS SHOWN OR AS DIRECTED BY THE ENGINEER.
3. FOR DETAILS ON GRAVEL MULCH AND DECOMPOSED GRANITE, SEE LD SHEET.
4. FOR WALL LAYOUT SEE SHEET C-2 AND FOR RETAINING WALL PROFILE AND DETAILS SEE R SHEETS.
5. FOR PCC WALK LOCATIONS, SEE SHEET C-7. FOR PCC STRUCTURAL SECTION, SEE CONSTRUCTION DETAILS SHEET.
6. LANDSCAPE SHOWN ON THIS SHEET IS FOR INFORMATION PURPOSES ONLY. REFER TO IP AND PP SHEETS FOR DETAILS.
7. FOR DETAIL OF SWALE w/ PPP, SEE DD SHEET.

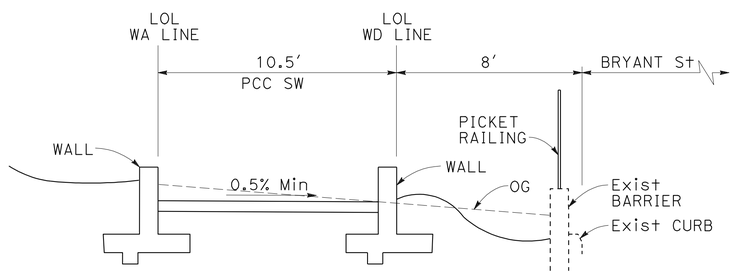

WA 2+41 TO 2+53.50

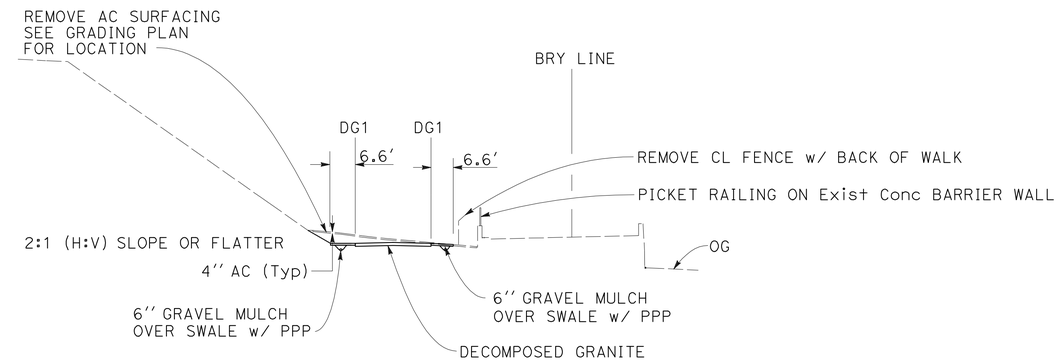

BRYANT AND BEALE St DOG PLAY AREA

BRY 46+98 TO 49+19

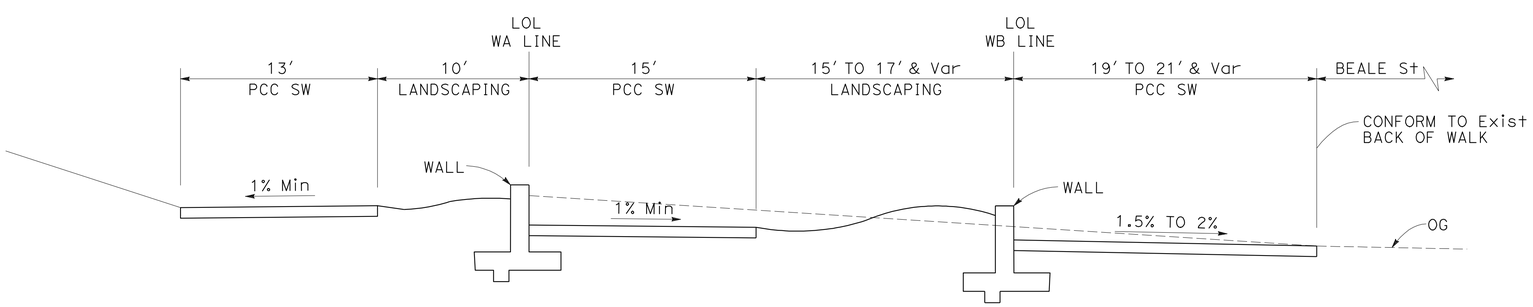

WA 1+74.18 TO 2+19.73

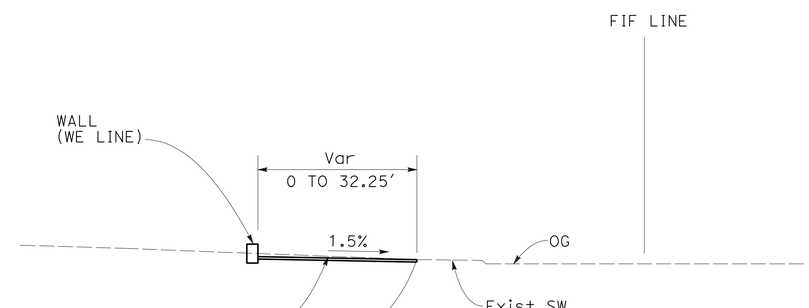

5TH St STAGING AREA

FIF 69+08.93 TO 69+78.93

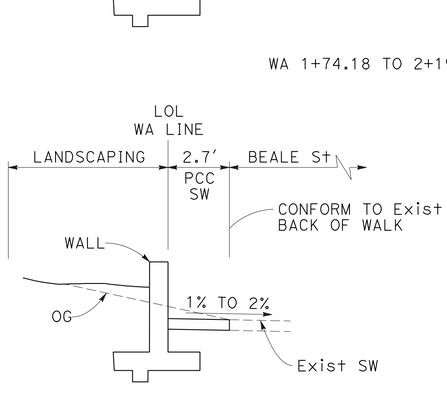

WA 1+11.41 TO 1+52.91

TYPICAL CROSS SECTIONS

NO SCALE

X-1

NIEN TRINH	NT
MICHAEL T. NGUYEN	4/6/10
REVISED BY	DATE REVISED
CALCULATED-DESIGNED BY	
CHECKED BY	
FUNCTIONAL SUPERVISOR	MICHAEL T. NGUYEN

STATE OF CALIFORNIA - DEPARTMENT OF TRANSPORTATION

Caltrans® **DESIGN**

LAST REVISION 06-08-10 | DATE PLOTTED => 25-JUN-2010 | TIME PLOTTED => 16:24

Dist	COUNTY	ROUTE	POST MILES TOTAL PROJECT	SHEET No.	TOTAL SHEETS
04	SF	80	4.9/5.9	3	127

N. Trinh 4-15-10
REGISTERED CIVIL ENGINEER DATE

6-21-10
PLANS APPROVAL DATE

REGISTERED PROFESSIONAL ENGINEER Nien Trinh No. 67739 Exp. 6-30-11 CIVIL STATE OF CALIFORNIA

THE STATE OF CALIFORNIA OR ITS OFFICERS OR AGENTS SHALL NOT BE RESPONSIBLE FOR THE ACCURACY OR COMPLETENESS OF SCANNED COPIES OF THIS PLAN SHEET.

NOTE:

FOR ACCURATE RIGHT OF WAY AND ACCESS DATA, CONTACT RIGHT OF WAY ENGINEERING AT THE DISTRICT OFFICE.

LEGEND:

- REMOVE ASPHALT CONCRETE SURFACING
- AC OVERLAY

NOTE:

1. FOR DETAILS NOT SHOWN, SEE CONSTRUCTION AND LANDSCAPE DETAILS SHEET.

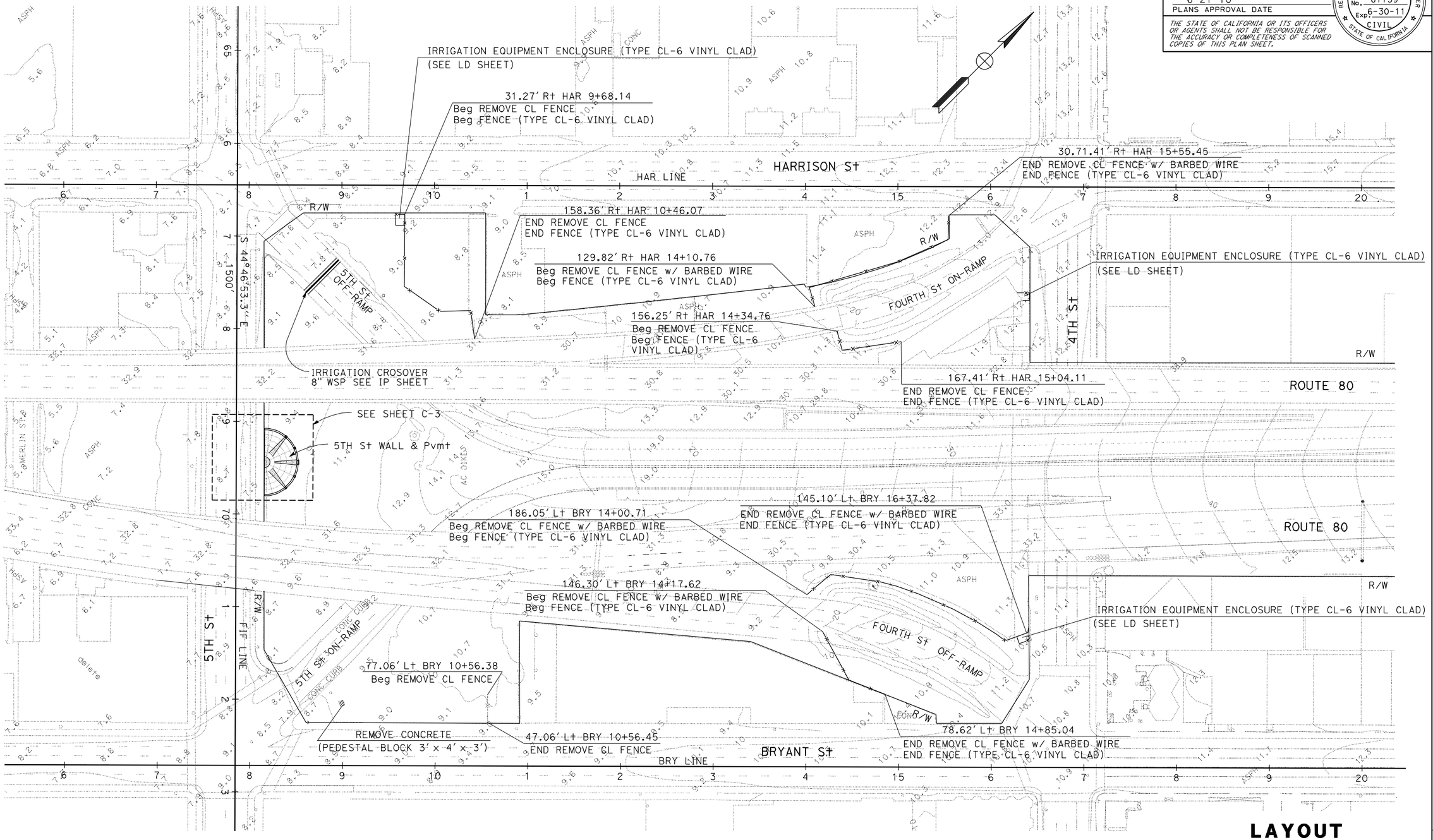

LAYOUT

SCALE: 1" = 50'

L-1

NT	4/6/10		
REVISED BY	DATE REVISED		
NIEN TRINH	MICHAEL T. NGUYEN		
CALCULATED-DESIGNED BY	CHECKED BY		
FUNCTIONAL SUPERVISOR	MICHAEL T. NGUYEN		

STATE OF CALIFORNIA - DEPARTMENT OF TRANSPORTATION
Caltrans
DESIGN

LAST REVISION 06-08-10
DATE PLOTTED => 28-JUN-2010
TIME PLOTTED => 14:20

Dist	COUNTY	ROUTE	POST MILES TOTAL PROJECT	SHEET No.	TOTAL SHEETS
04	SF	80	4.9/5.9	4	127

REGISTERED CIVIL ENGINEER 4-15-10 DATE

6-21-10
PLANS APPROVAL DATE

REGISTERED PROFESSIONAL ENGINEER Nien Trinh No. 67739 Exp. 6-30-11 CIVIL STATE OF CALIFORNIA

THE STATE OF CALIFORNIA OR ITS OFFICERS OR AGENTS SHALL NOT BE RESPONSIBLE FOR THE ACCURACY OR COMPLETENESS OF SCANNED COPIES OF THIS PLAN SHEET.

NOTE:

FOR ACCURATE RIGHT OF WAY AND ACCESS DATA, CONTACT RIGHT OF WAY ENGINEERING AT THE DISTRICT OFFICE.

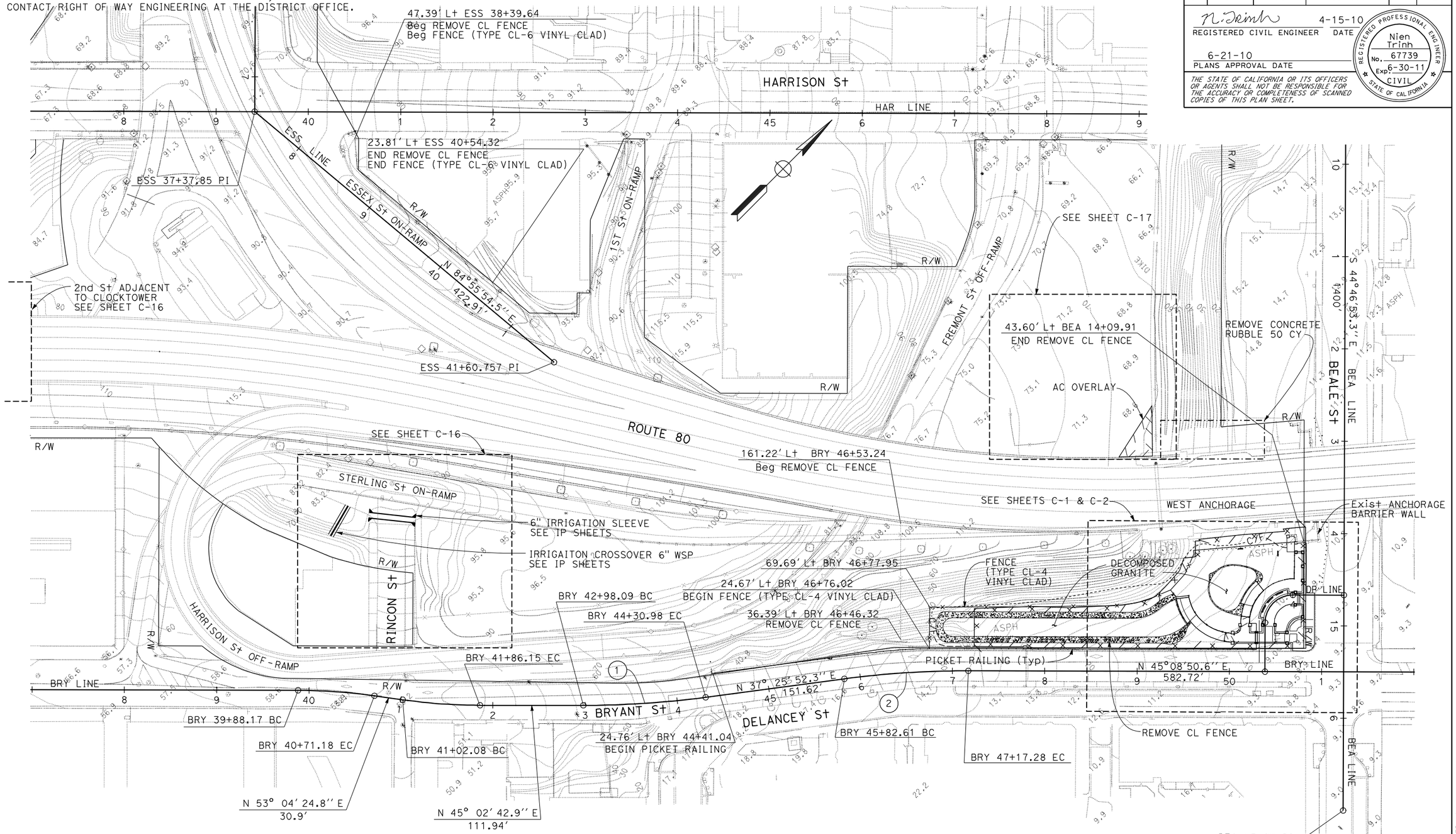

CURVE DATA

No.	R	Δ	T	L	N-COORDINATE	E-COORDINATE
1	1000'	07° 36' 50''	66.54'	132.89'	172747.08	72252.77
2	1000'	07° 42' 58''	67.44'	134.67'	171651.87	73933.10

FOR NOTES, ABBREVIATIONS AND LEGEND, SEE SHEET L-1

LAYOUT

SCALE: 1" = 50'

L-2

CALCULATED-DESIGNED BY	NIEN TRINH	REVISED BY	NT
CHECKED BY	MICHAEL T. NGUYEN	DATE REVISED	4/6/10

FUNCTIONAL SUPERVISOR: MICHAEL T. NGUYEN

STATE OF CALIFORNIA - DEPARTMENT OF TRANSPORTATION

Caltrans® **DESIGN**

LAST REVISION 06-08-10 | DATE PLOTTED => 28-JUN-2010 | TIME PLOTTED => 14:20

Dist	COUNTY	ROUTE	POST MILES TOTAL PROJECT	SHEET No.	TOTAL SHEETS
04	SF	80	4.9/5.9	5	127

REGISTERED CIVIL ENGINEER 4-15-10 DATE

6-21-10
PLANS APPROVAL DATE

REGISTERED PROFESSIONAL ENGINEER Nien Trinh No. 67739 Exp. 6-30-11 CIVIL STATE OF CALIFORNIA

THE STATE OF CALIFORNIA OR ITS OFFICERS OR AGENTS SHALL NOT BE RESPONSIBLE FOR THE ACCURACY OR COMPLETENESS OF SCANNED COPIES OF THIS PLAN SHEET.

NOTE:

FOR ACCURATE RIGHT OF WAY AND ACCESS DATA,
CONTACT RIGHT OF WAY ENGINEERING AT THE DISTRICT OFFICE.

CURVE DATA

No.	R	Δ	T	L	N-COORDINATE	E-COORDINATE
1	20.12′	90° 00′ 00″	20.12′	31.60′	172646.28	73439.62
2	30.12′	89° 59′ 58″	30.12′	47.31′	172646.28	73439.62
3	53′	26° 50′ 53″	12.65′	24.84′	172630.64	73365.34
4	46.92′	48° 59′ 55″	21.38′	40.12′	172624.76	73366.89
5	62.50′	27° 19′ 34″	15.19′	29.81′	172630.64	73365.34
6	56.42′	22° 18′ 32″	11.12′	21.97′	172624.76	73366.89
7	60.37′	28° 18′ 52″	15.23′	29.83′	172624.76	73366.89
8	46.92′	46° 05′ 04″	19.96′	37.74′	172646.28	73439.62
9	60.37′	28° 18′ 52″	15.23′	29.83′	172646.28	73439.62
10	55.29′	19° 51′ 56″	9.68′	19.17′	172645.71	73438.67

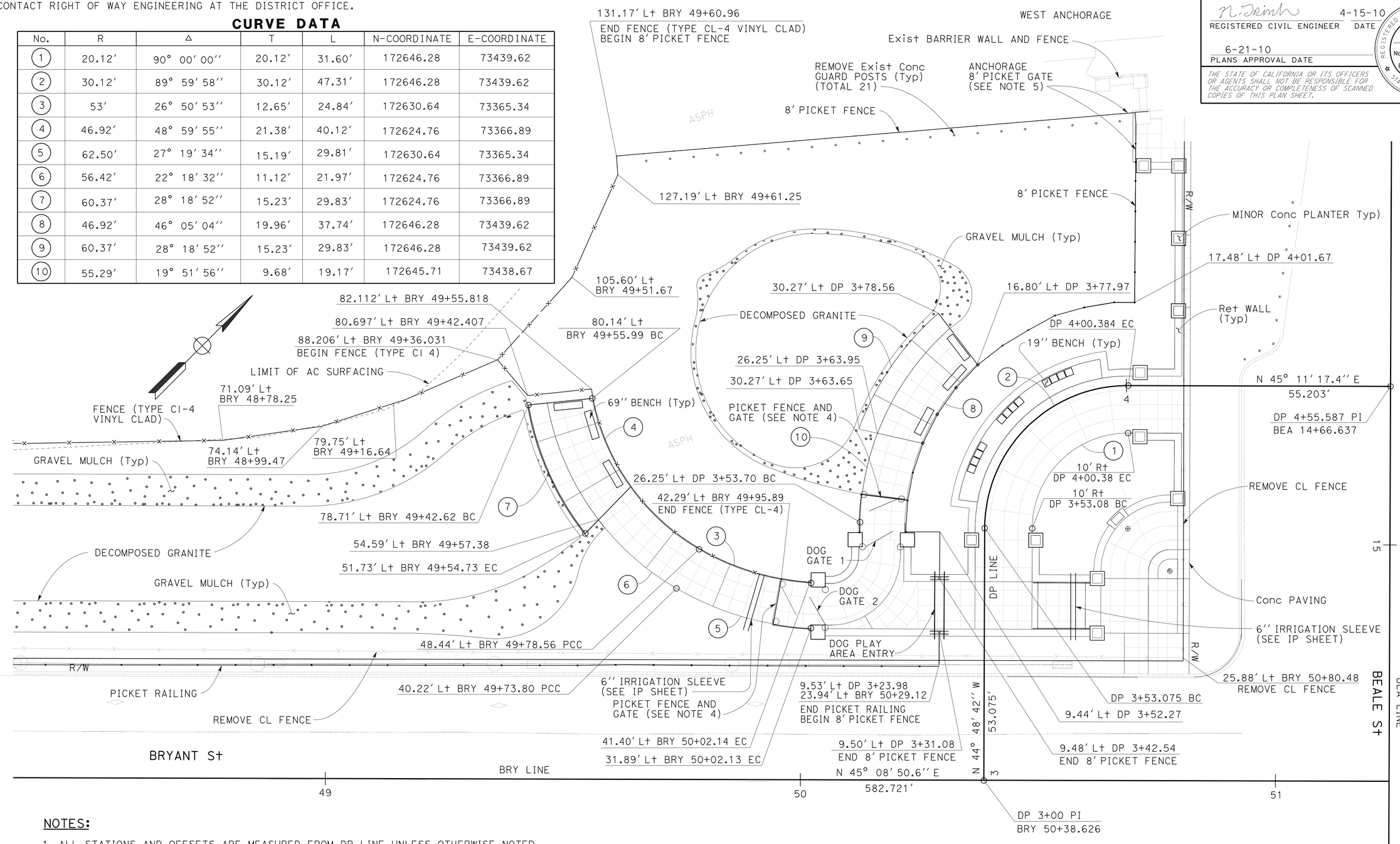

NOTES:

1. ALL STATIONS AND OFFSETS ARE MEASURED FROM DP LINE UNLESS OTHERWISE NOTED.
2. FOR CONCRETE WALL AND PLANTER LAYOUT DETAILS, SEE SHEET C-2.
3. FOR CONCRETE PAVEMENT LAYOUT DETAILS, SEE SHEET C-7.
4. FOR PICKET FENCE AND GATE AT DOG GATE 1 AND 2, SEE DETAILS ON SHEET C-14.
5. FOR ANCHORAGE PICKET FENCE AND GATES, SEE DETAILS ON SHEET C-12.
6. FOR DETAIL OF DOG PLAY AREA ENTRY, SEE SHEET C-15.

LEGEND:

GRAVEL MULCH

ABBREVIATIONS:

BW	BACK OF WALK
TF	TOP OF FOOTING
TW	TOP OF WALL

CONSTRUCTION DETAILS
BRYANT AND BEALE STREET
SCALE 1" = 10′

C-1

REVISED BY	DATE REVISED
NT	4/6/10

NIEN TRINH — MICHAEL T. NGUYEN

CALCULATED-DESIGNED BY — CHECKED BY

FUNCTIONAL SUPERVISOR: MICHAEL T. NGUYEN

STATE OF CALIFORNIA - DEPARTMENT OF TRANSPORTATION — DESIGN — Caltrans

LAST REVISION 06-10-10 | DATE PLOTTED => 28-JUN-2010 | TIME PLOTTED => 07:58

Dist	COUNTY	ROUTE	POST MILES TOTAL PROJECT	SHEET No.	TOTAL SHEETS
04	SF	80	4.9/5.9	6	127

REGISTERED CIVIL ENGINEER 4-15-10 DATE

6-21-10
PLANS APPROVAL DATE

REGISTERED PROFESSIONAL ENGINEER Nien Trinh No. 67739 Exp. 6-30-11 CIVIL STATE OF CALIFORNIA

THE STATE OF CALIFORNIA OR ITS OFFICERS OR AGENTS SHALL NOT BE RESPONSIBLE FOR THE ACCURACY OR COMPLETENESS OF SCANNED COPIES OF THIS PLAN SHEET.

CURVE DATA

No.	R	Δ	T	L	N-COORDINATE	E-COORDINATE
1	32.37′	07° 09′ 63″	2.02′	4.04′	172646.28	73439.62
2	36.37′	75° 45′ 8.29″	26.30′	45.54′	172646.28	73439.62
3	32.37′	07° 09′ 10.63″	2.02′	4.04′	172646.28	73439.62
4	5.75′	89° 59′ 58.97″	5.75′	9.03′	172598.06	73399.25
5	14.75′	90° 50′ 36.63″	14.97′	23.39′	172646.23	73452.18

LEGEND: (FOR THIS SHEET ONLY)

RETURN WALL

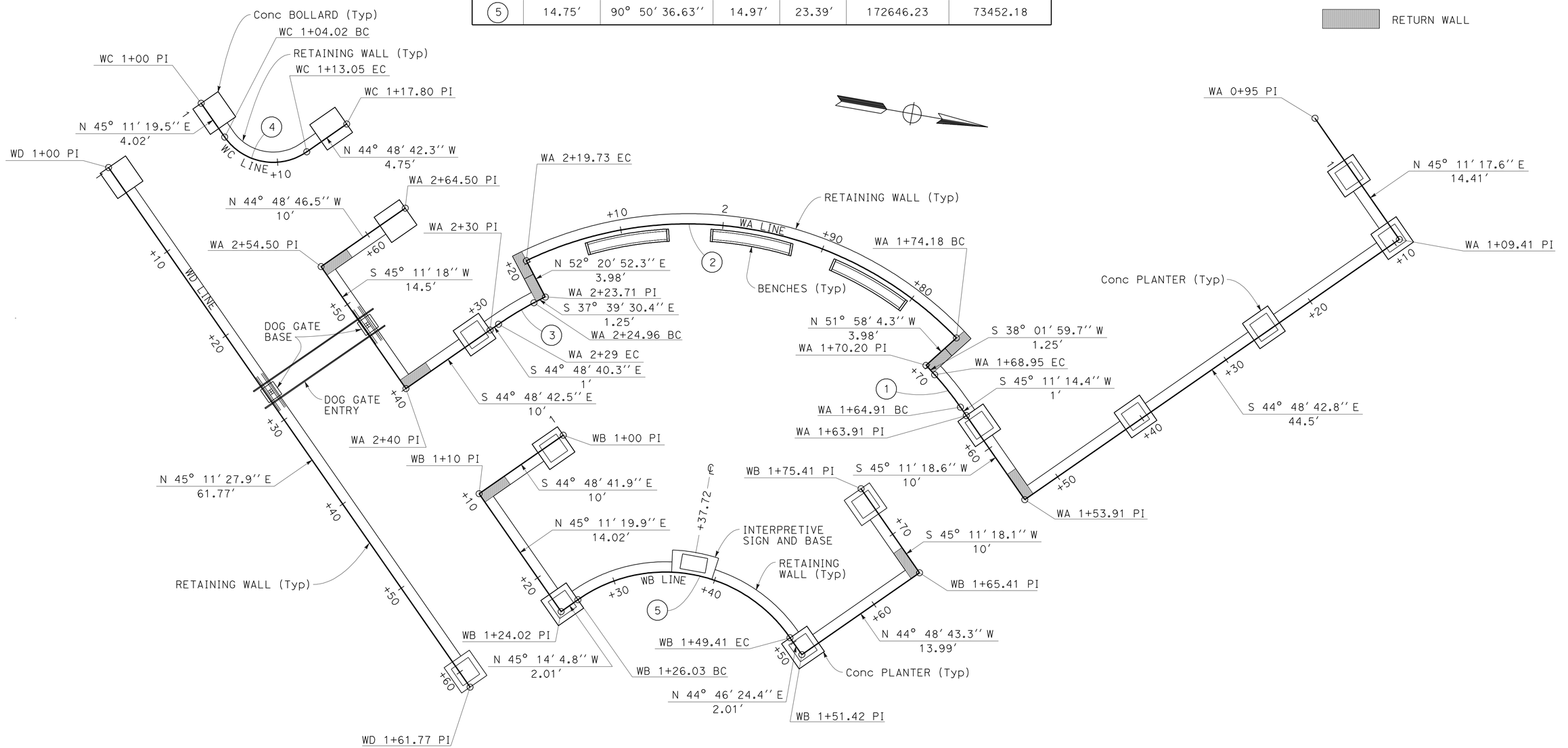

NOTES:

1. FOR RETAINING WALL PROFILES AND RETURN WALL, SEE R SHEETS.
2. FOR OTHER DETAILS NOT SHOWN, SEE CONSTRUCTION DETAIL SHEET.

THIS PLAN ACCURATE FOR WALL WORK ONLY

CONSTRUCTION DETAILS
WALL LAYOUT
BRYANT AND BEALE STREET

SCALE 1" = 5′

C-2

REVISED BY	DATE REVISED
NT	4/6/10

NIEN TRINH — CALCULATED-DESIGNED BY
MICHAEL T. NGUYEN — CHECKED BY
MICHAEL T. NGUYEN — FUNCTIONAL SUPERVISOR

STATE OF CALIFORNIA - DEPARTMENT OF TRANSPORTATION
Caltrans
DESIGN

LAST REVISION 04-10-10
DATE PLOTTED => 28-JUN-2010
TIME PLOTTED => 07:58

Dist	COUNTY	ROUTE	POST MILES TOTAL PROJECT	SHEET No.	TOTAL SHEETS
04	SF	80	4.9/5.9	7	127

REGISTERED CIVIL ENGINEER — DATE 4-15-10

6-21-10
PLANS APPROVAL DATE

REGISTERED PROFESSIONAL ENGINEER — Nien Trinh — No. 67739 — Exp. 6-30-11 — CIVIL — STATE OF CALIFORNIA

THE STATE OF CALIFORNIA OR ITS OFFICERS OR AGENTS SHALL NOT BE RESPONSIBLE FOR THE ACCURACY OR COMPLETENESS OF SCANNED COPIES OF THIS PLAN SHEET.

NOTE:

FOR ACCURATE RIGHT OF WAY AND ACCESS DATA,
CONTACT RIGHT OF WAY ENGINEERING AT THE DISTRICT OFFICE.

CURVE DATA

No.	R	Δ	T	L	N-COORDINATE	E-COORDINATE
1	36.50′	90° 02′ 28″	36.53′	57.37′	169826.62	70248.71
2	36.50′	89° 59′ 21″	36.50′	57.33′	169826.62	70248.71

NOTES:

1. FOR DETAILS NOT SHOWN, SEE C SHEET AND LD SHEET.
2. SEE SHEET R-4 FOR WALL PROFILE.
3. BEGINNING AND END OF RETAINING WALL TO ABUT Exist BACK OF SIDEWALK.
4. FOR PAVEMENT DETAILS, SEE SHEET C-8.

LEGEND: (THIS SHEET ONLY)

MINOR CONCRETE (AGGREGATE PAVING)

MINOR CONCRETE PAVING

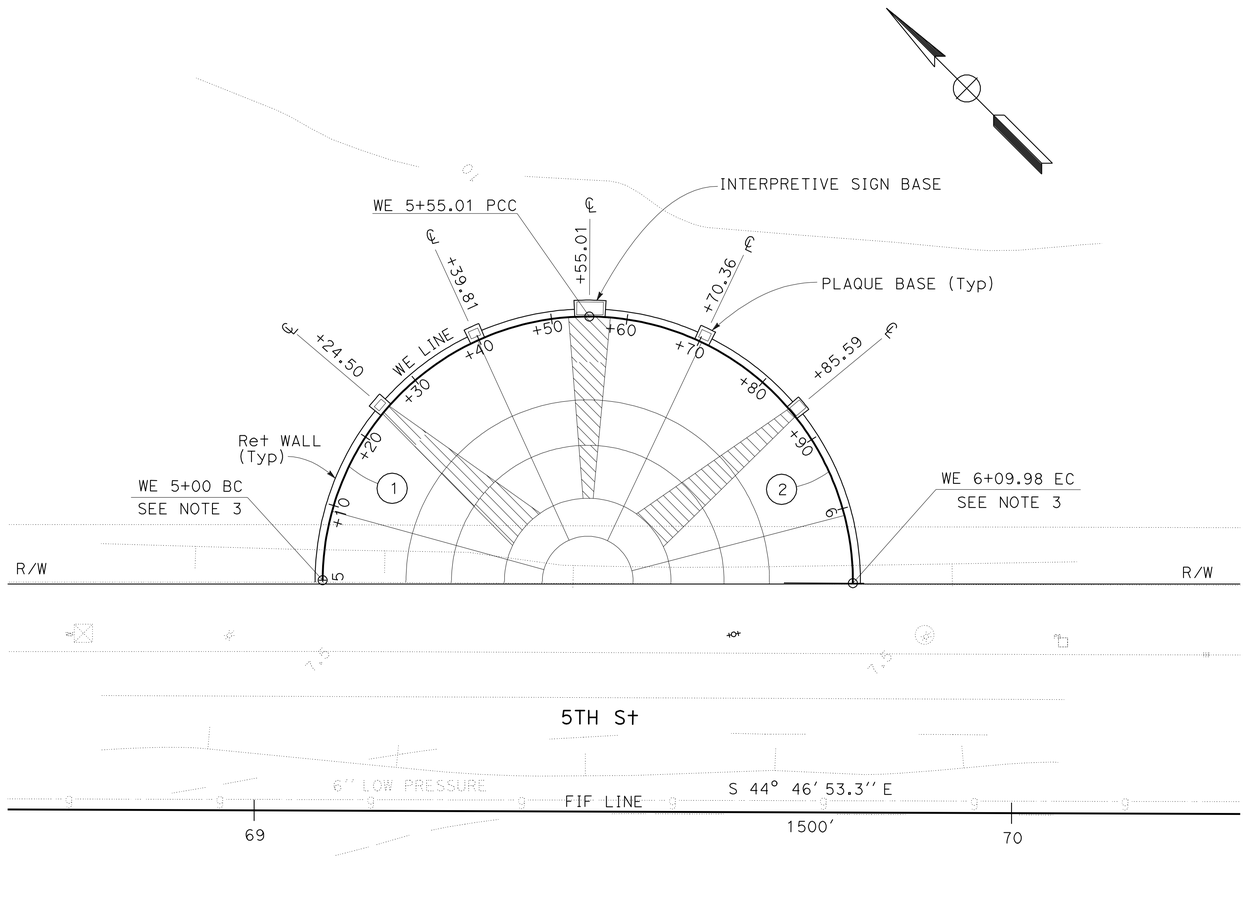

WALL LAYOUT

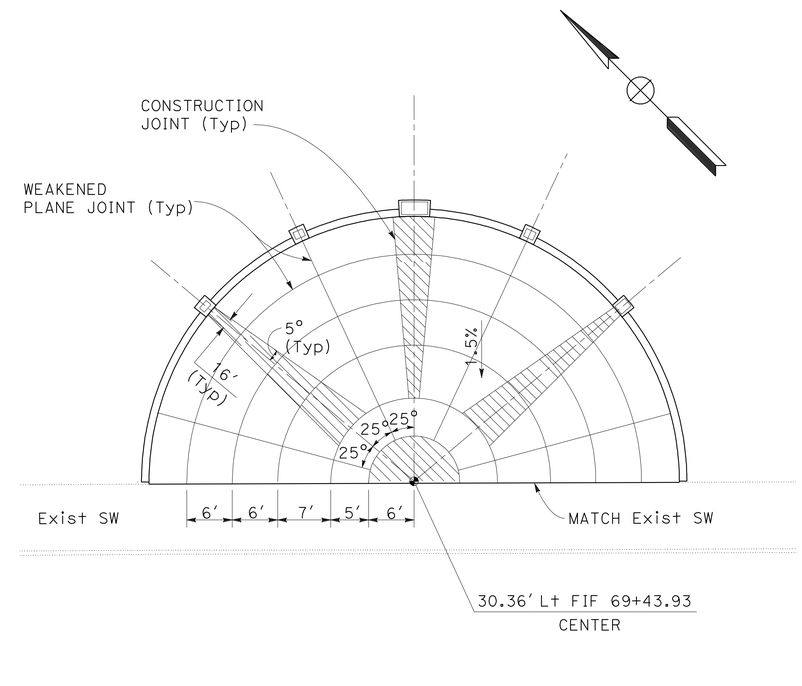

PAVEMENT LAYOUT

CONSTRUCTION DETAILS
5TH STREET LAYOUT
SCALE: 1" = 10′

C-3

STATE OF CALIFORNIA - DEPARTMENT OF TRANSPORTATION
Caltrans® DESIGN

FUNCTIONAL SUPERVISOR: MICHAEL T. NGUYEN

CALCULATED-DESIGNED BY: NIEN TRINH — CHECKED BY: MICHAEL T. NGUYEN

REVISED BY: NT — DATE REVISED: 4/6/10

LAST REVISION 04-15-10 — DATE PLOTTED => 28-JUN-2010 — TIME PLOTTED => 07:58

Dist	COUNTY	ROUTE	POST MILES TOTAL PROJECT	SHEET No.	TOTAL SHEETS
04	SF	80	4.9/5.9	8	127

N. Trinh 4-15-10
REGISTERED CIVIL ENGINEER DATE

6-21-10
PLANS APPROVAL DATE

REGISTERED PROFESSIONAL ENGINEER Nien Trinh No. 67739 Exp. 6-30-11 CIVIL STATE OF CALIFORNIA

THE STATE OF CALIFORNIA OR ITS OFFICERS OR AGENTS SHALL NOT BE RESPONSIBLE FOR THE ACCURACY OR COMPLETENESS OF SCANNED COPIES OF THIS PLAN SHEET.

NOTES:

1. TOP OF CONCRETE BOLLARDS, CONCRETE DOG GATE BASE AND CONCRETE PLANTERS SHALL BE LEVEL.
2. SEE RETAINING WALL (R) SHEETS FOR TOP OF BOLLARD AND PLANTER ELEVATIONS.
3. FOR LOCATIONS OF CONCRETE BOLLARD, PLANTER, DOG BASE AND RETAINING WALL SEE WALL LAYOUT (SHEET C-2).
4. FOR LOCATIONS OF MINOR CONCRETE PAVING, SEE PAVEMENT LAYOUT (SHEET C-7).

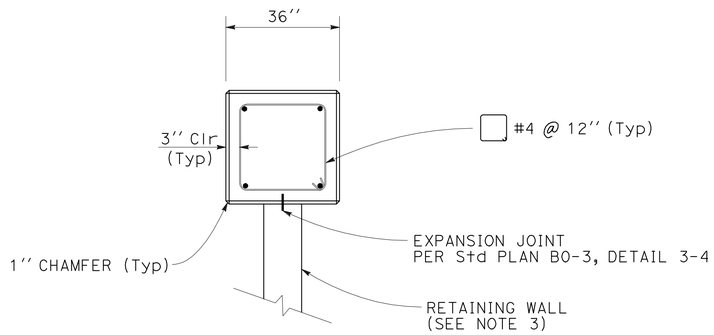

PLAN

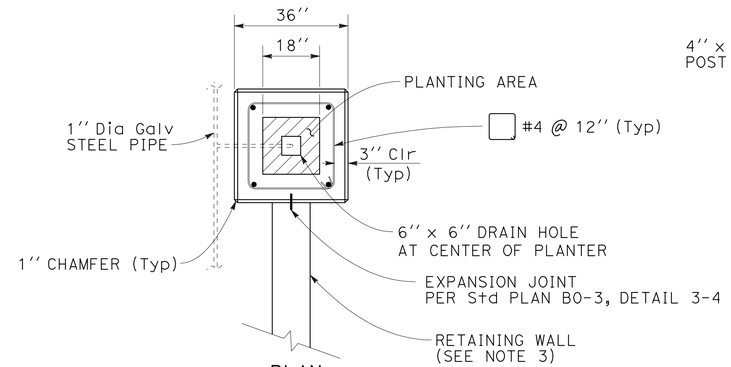

PLAN

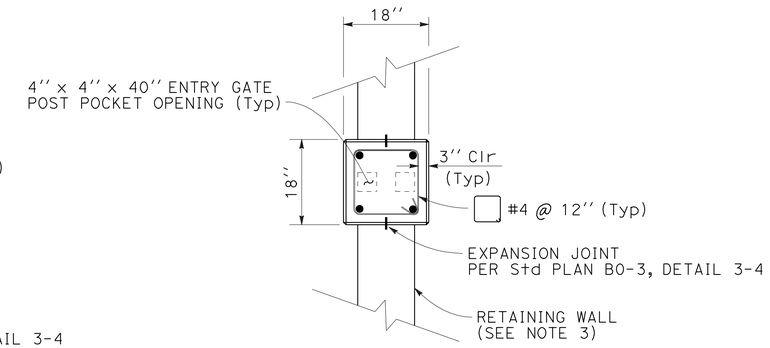

PLAN

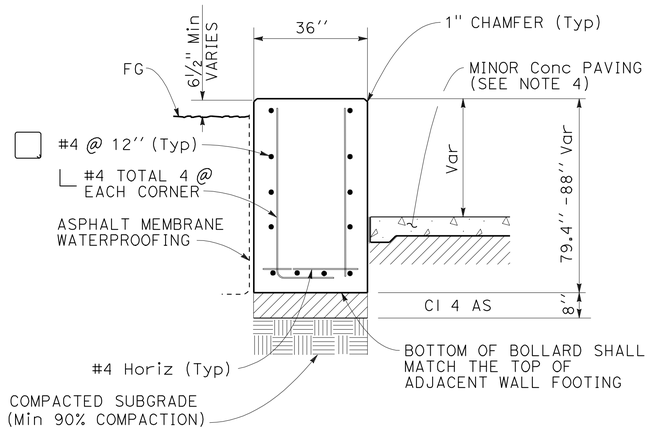

SECTION
CONCRETE BOLLARD

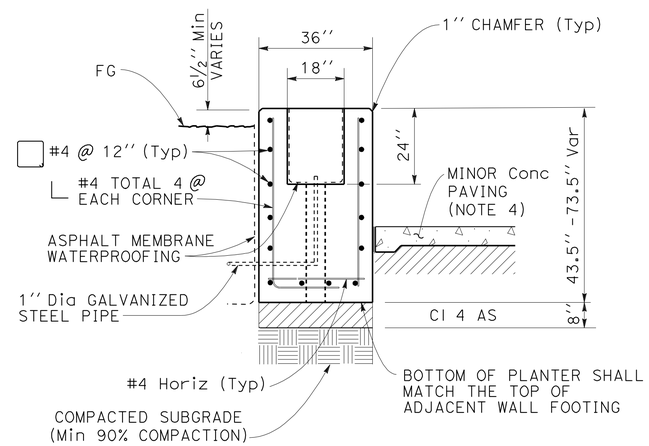

SECTION
CONCRETE PLANTER

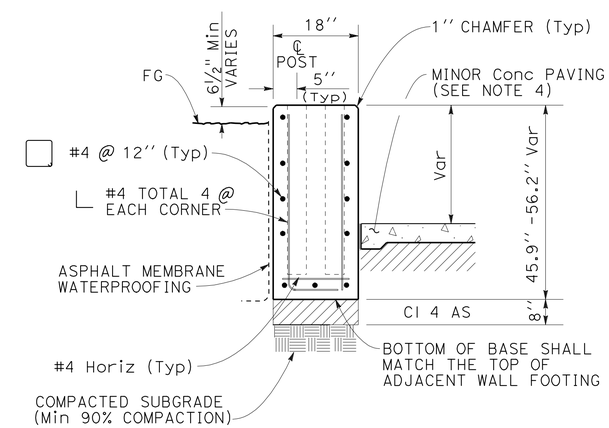

SECTION
CONCRETE DOG GATE BASE

CONSTRUCTION DETAILS
NO SCALE

C-4

CALCULATED-DESIGNED BY	CHECKED BY	REVISED BY	DATE REVISED
NIEN TRINH	MICHAEL T. NGUYEN	NT	4/6/10

FUNCTIONAL SUPERVISOR: MICHAEL T. NGUYEN

STATE OF CALIFORNIA - DEPARTMENT OF TRANSPORTATION
Caltrans
DESIGN

LAST REVISION 06-08-10 | DATE PLOTTED => 28-JUN-2010 | TIME PLOTTED => 07:58

Dist	COUNTY	ROUTE	POST MILES TOTAL PROJECT	SHEET No.	TOTAL SHEETS
04	SF	80	4.9/5.9	9	127

REGISTERED CIVIL ENGINEER — DATE 4-15-10

PLANS APPROVAL DATE 6-21-10

REGISTERED PROFESSIONAL ENGINEER — Nien Trinh — No. 67739 — Exp. 6-30-11 — CIVIL — STATE OF CALIFORNIA

THE STATE OF CALIFORNIA OR ITS OFFICERS OR AGENTS SHALL NOT BE RESPONSIBLE FOR THE ACCURACY OR COMPLETENESS OF SCANNED COPIES OF THIS PLAN SHEET.

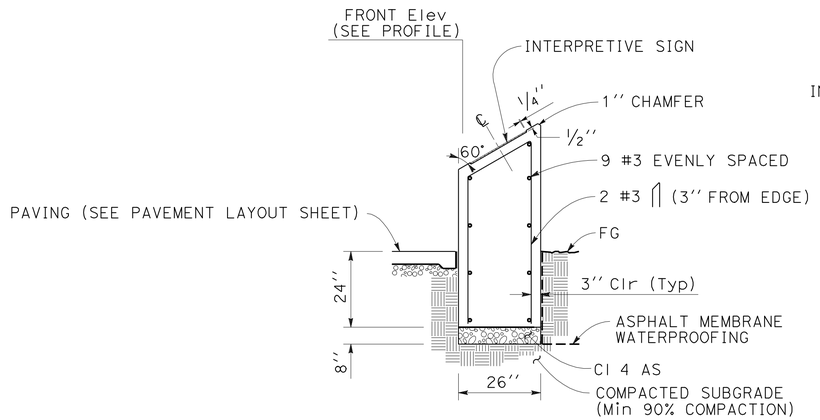

SECTION

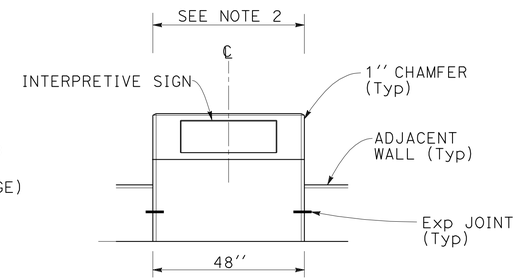

FRONT ELEVATION

NOTES:

1. INTERPRETIVE SIGN SHALL BE CENTERED ON TOP FACE OF BASE.
2. REAR WIDTH VARIES TO JOIN ADJACENT WALLS.
3. EXPANSION JOINT PER Std PLAN B0-3, DETAIL 3-4

INTERPRETIVE SIGN BASE

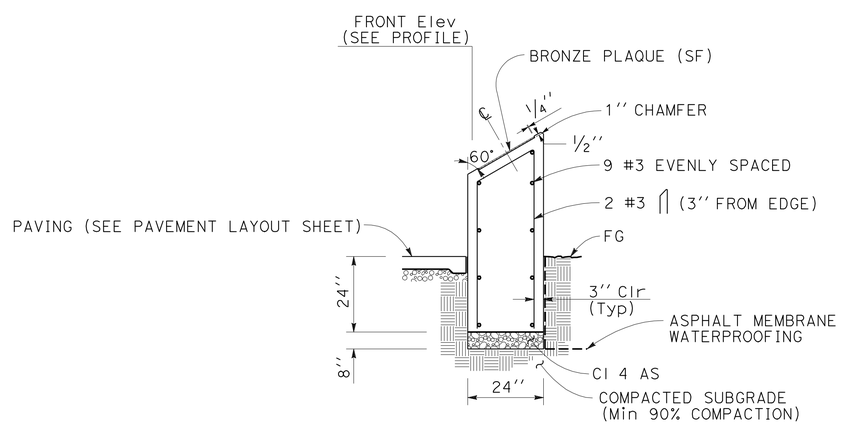

SECTION

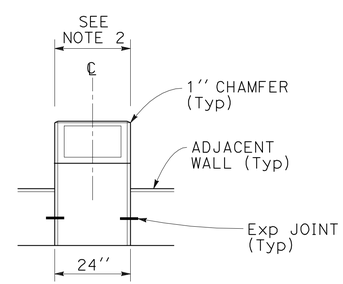

FRONT ELEVATION

NOTES:

1. BRONZE PLAQUES DIFFER IN HEIGHT. BRONZE PLAQUES SHALL BE CENTERED ON TOP FACE OF BASE.
2. REAR WIDTH VARIES TO JOIN ADJACENT WALLS.
3. EXPANSION JOINT PER Std PLAN B0-3, DETAIL 3-4

PLAQUE BASE

CONSTRUCTION DETAILS
SIGN AND PLAQUE BASE
NO SCALE

C-5

REVISED BY	DATE REVISED
NT	4/6/10

CALCULATED-DESIGNED BY	CHECKED BY
NIEN TRINH	MICHAEL T. NGUYEN

FUNCTIONAL SUPERVISOR: MICHAEL T. NGUYEN

STATE OF CALIFORNIA - DEPARTMENT OF TRANSPORTATION — Caltrans — DESIGN

LAST REVISION 04-15-10 — DATE PLOTTED => 28-JUN-2010 — TIME PLOTTED => 07:58

Dist	COUNTY	ROUTE	POST MILES TOTAL PROJECT	SHEET No.	TOTAL SHEETS
04	SF	80	4.9/5.9	10	127

N. Trinh 4-15-10
REGISTERED CIVIL ENGINEER DATE

6-21-10
PLANS APPROVAL DATE

REGISTERED PROFESSIONAL ENGINEER Nien Trinh No. 67739 Exp. 6-30-11 CIVIL STATE OF CALIFORNIA

THE STATE OF CALIFORNIA OR ITS OFFICERS OR AGENTS SHALL NOT BE RESPONSIBLE FOR THE ACCURACY OR COMPLETENESS OF SCANNED COPIES OF THIS PLAN SHEET.

CURVE DATA

No.	R	Δ	T	L	N-COORDINATE	E-COORDINATE
1	18′	35° 12′ 36.37″	5.71′	11.06′	172567.42	73379.65
2	18.16′	83° 15′ 01.79″	16.14′	26.39′	172548.44	73348.86
3	168.04′	05° 3′ 41.14″	7.43′	14.84′	172402.52	73464.52
4	12.19′	64° 25′ 22.21″	7.68′	13.70′	172375.74	73182.04
5	24.61′	57° 29′ 29.43″	13.50′	24.69′	172387.44	73186.20
6	5.76′	58° 05′ 08.27″	3.20′	5.84′	172383.23	73167.83
7	100′	11° 50′ 22.05″	10.37′	20.66′	172694.03	73337.97
8	18.42′	22° 30′ 56.4″	3.67′	7.24′	172603.38	73328.46
9	2.50′	80° 26′ 19.56″	2.11′	3.51′	172620.07	73341.07
10	18.42′	22° 30′ 56.4″	3.67′	7.24′	172629.73	73322.52
11	60′	05° 32′ 44.52″	2.91′	5.81′	172601.80	73390.79
12	7′	112° 52′ 49.16″	10.55′	13.79′	172652.90	73376.72

NOTES:

1. DG1 AND DG2 LINE RUN ALONG THE OUTER EDGE OF DECOMPOSED GRANITE.
2. FOR DECOMPOSED GRANITE INSTALLATION, SEE LD SHEET.
3. FOR SWALE WITH PPP, SEE DD SHEET.

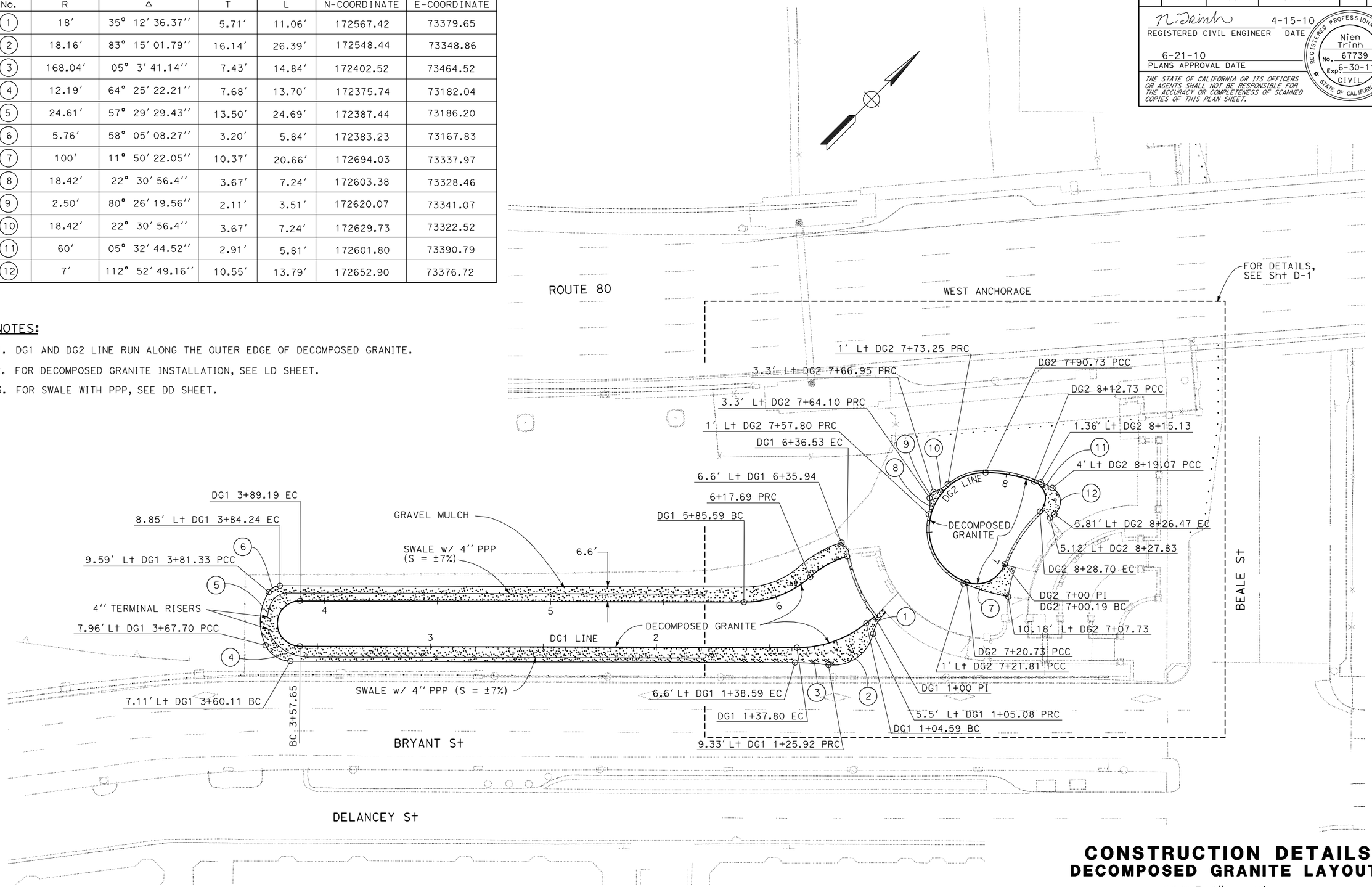

CONSTRUCTION DETAILS
DECOMPOSED GRANITE LAYOUT

SCALE 1″ = 20′

C-6

STATE OF CALIFORNIA - DEPARTMENT OF TRANSPORTATION
Caltrans DESIGN

FUNCTIONAL SUPERVISOR: MICHAEL T. NGUYEN
CALCULATED-DESIGNED BY: NIEN TRINH
CHECKED BY: MICHAEL T. NGUYEN
REVISED BY: NT
DATE REVISED: 4/6/10

LAST REVISION 04-10-10
DATE PLOTTED => 28-JUN-2010
TIME PLOTTED => 14:21

Dist	COUNTY	ROUTE	POST MILES TOTAL PROJECT	SHEET No.	TOTAL SHEETS
04	SF	80	4.9/5.9	11	127

REGISTERED CIVIL ENGINEER 4-15-10 DATE

6-21-10
PLANS APPROVAL DATE

REGISTERED PROFESSIONAL ENGINEER Nien Trinh No. 67739 Exp. 6-30-11 CIVIL STATE OF CALIFORNIA

THE STATE OF CALIFORNIA OR ITS OFFICERS OR AGENTS SHALL NOT BE RESPONSIBLE FOR THE ACCURACY OR COMPLETENESS OF SCANNED COPIES OF THIS PLAN SHEET.

LEGEND: (THIS SHEET ONLY)

MINOR CONCRETE (AGGREGATE PAVING)

MINOR CONCRETE PAVING

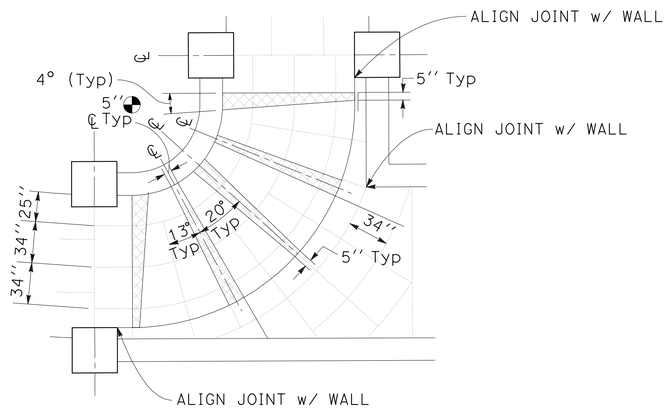

DETAIL A
SCALE 1'' = 5'

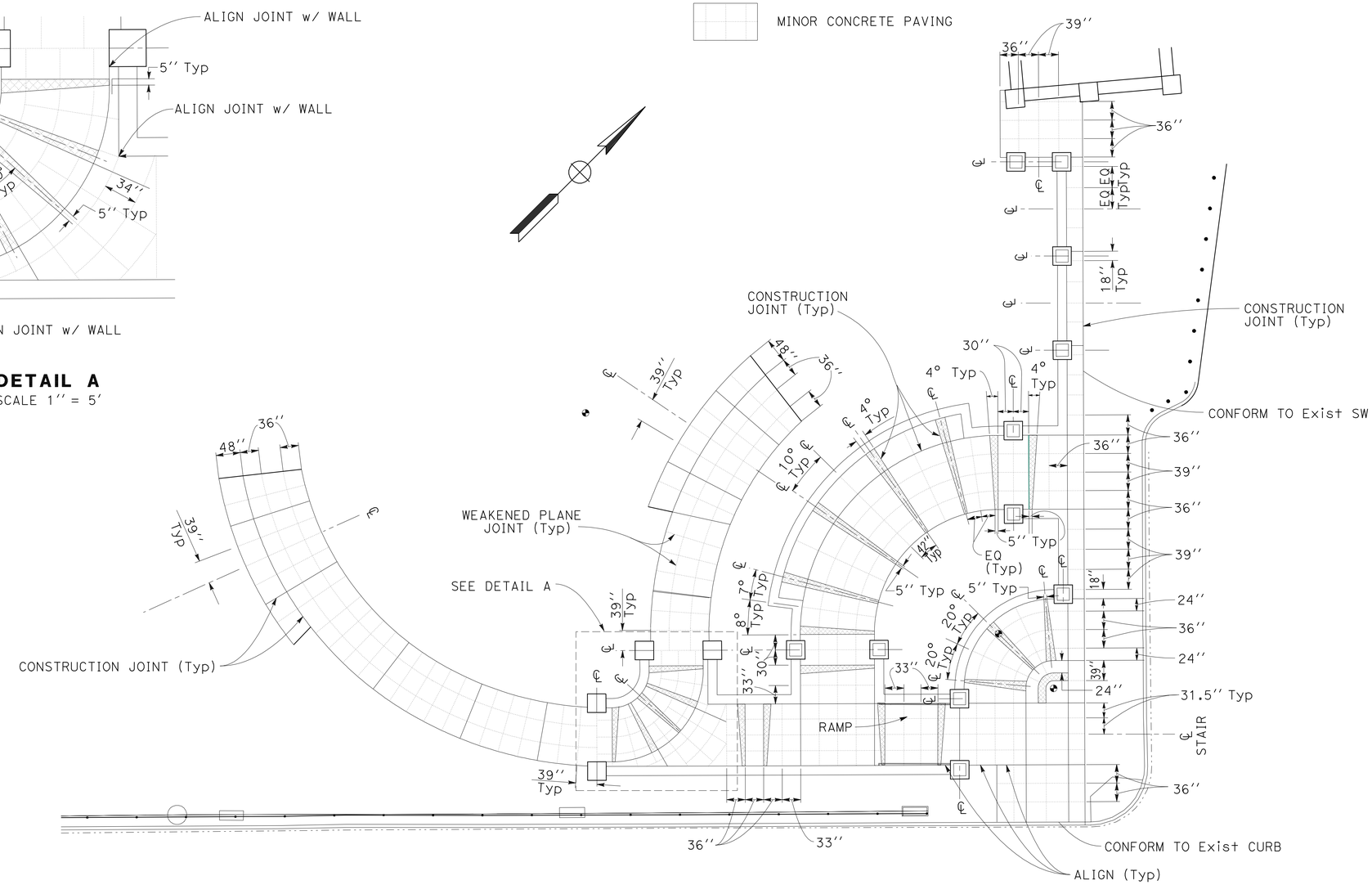

NOTES:

1. FOR DETAILS OF MINOR CONCRETE PAVING, MINOR CONCRETE (AGGREGATE) PAVING, WEAKENED PLANE JOINT AND CONSTRUCTION JOINT, SEE SHEET C-8.
2. FOR SUPPLEMENTAL PAVEMENT LAYOUT INFORMATION, SEE SHEET C-18.

CONSTRUCTION DETAILS
PAVEMENT LAYOUT
BRYANT AND BEALE STREET
SCALE 1" = 10'

C-7

STATE OF CALIFORNIA - DEPARTMENT OF TRANSPORTATION
Caltrans DESIGN

FUNCTIONAL SUPERVISOR: MICHAEL T. NGUYEN
CALCULATED-DESIGNED BY: NIEN TRINH
CHECKED BY: MICHAEL T. NGUYEN
REVISED BY: NT
DATE REVISED: 4/6/10

LAST REVISION 06-10-10
DATE PLOTTED => 28-JUN-2010
TIME PLOTTED => 07:59

Dist	COUNTY	ROUTE	POST MILES TOTAL PROJECT	SHEET No.	TOTAL SHEETS
04	SF	80	4.9/5.9	12	127

REGISTERED CIVIL ENGINEER — DATE 4-15-10

6-21-10
PLANS APPROVAL DATE

REGISTERED PROFESSIONAL ENGINEER — Nien Trinh — No. 67739 — Exp. 6-30-11 — CIVIL — STATE OF CALIFORNIA

THE STATE OF CALIFORNIA OR ITS OFFICERS OR AGENTS SHALL NOT BE RESPONSIBLE FOR THE ACCURACY OR COMPLETENESS OF SCANNED COPIES OF THIS PLAN SHEET.

NOTES:

1. OVERFILLING OF SEALANT WILL NOT BE ALLOWED.
2. DOWELS SHALL BE PERPENDICULAR TO JOINT AND LEVEL WITH TOP OF PCC.
3. ½'' PREMOLDED EXPANSION JOINT FILLER PER Std PLAN B3-8.

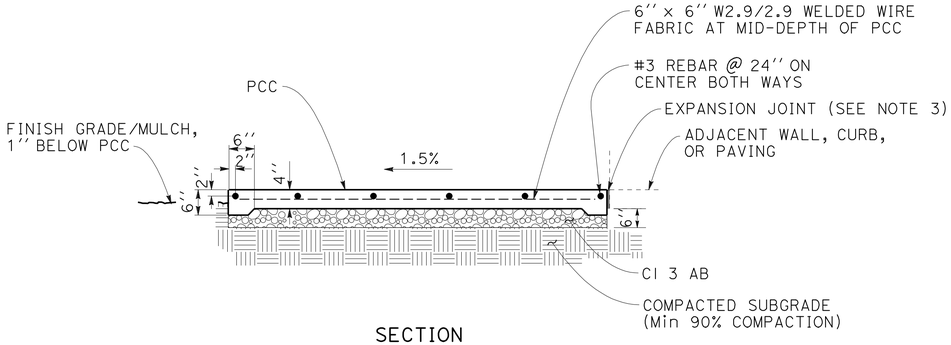

SECTION
MINOR CONCRETE PAVING

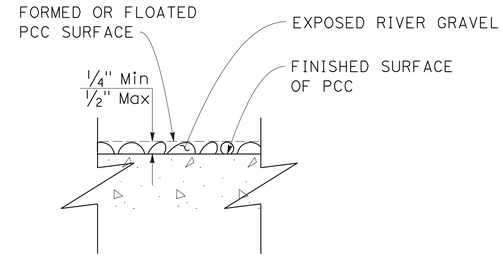

SECTION
EXPOSED AGGREGATE DETAIL

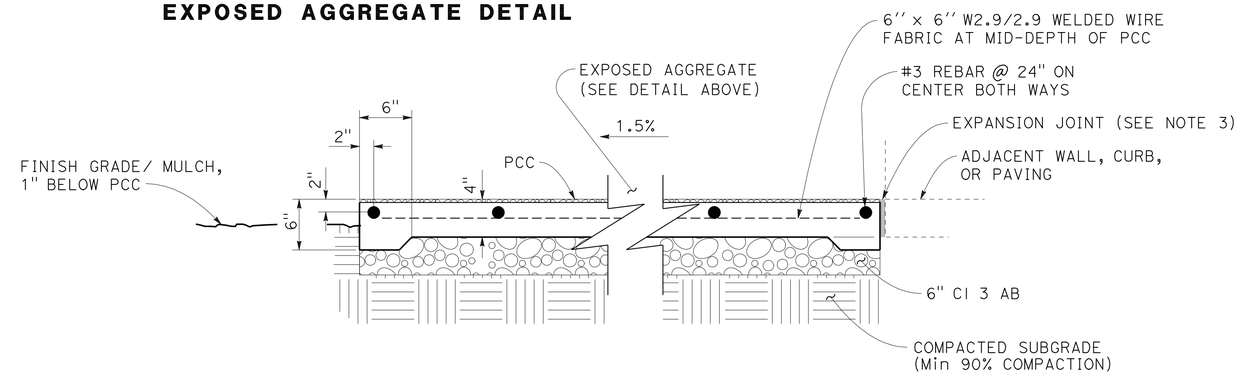

SECTION
MINOR CONCRETE (AGGREGATE) PAVING

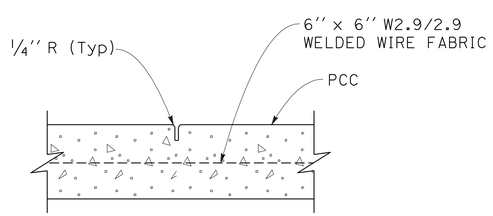

SECTION
WEAKENED PLANE JOINT

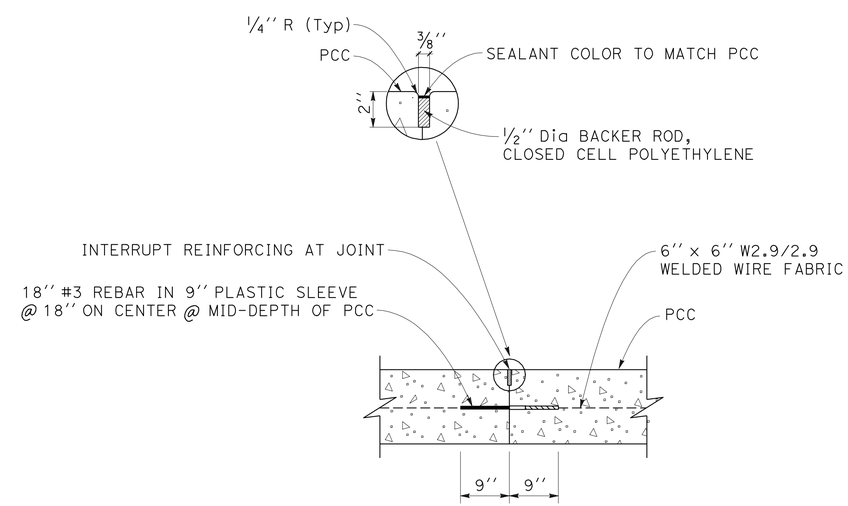

SECTION
CONSTRUCTION JOINT

CONSTRUCTION DETAILS
PAVEMENT DETAILS
NO SCALE

C-8

STATE OF CALIFORNIA - DEPARTMENT OF TRANSPORTATION
Caltrans® DESIGN
FUNCTIONAL SUPERVISOR: MICHAEL T. NGUYEN
CALCULATED-DESIGNED BY: NIEN TRINH
CHECKED BY: MICHAEL T. NGUYEN
REVISED BY: NT
DATE REVISED: 4/6/10

LAST REVISION 06-08-10
DATE PLOTTED => 28-JUN-2010
TIME PLOTTED => 07:59

Dist	COUNTY	ROUTE	POST MILES TOTAL PROJECT	SHEET No.	TOTAL SHEETS
04	SF	80	4.9/5.9	13	127

REGISTERED CIVIL ENGINEER — DATE 4-15-10

PLANS APPROVAL DATE 6-21-10

REGISTERED PROFESSIONAL ENGINEER — Nien Trinh — No. 67739 — Exp. 6-30-11 — CIVIL — STATE OF CALIFORNIA

THE STATE OF CALIFORNIA OR ITS OFFICERS OR AGENTS SHALL NOT BE RESPONSIBLE FOR THE ACCURACY OR COMPLETENESS OF SCANNED COPIES OF THIS PLAN SHEET.

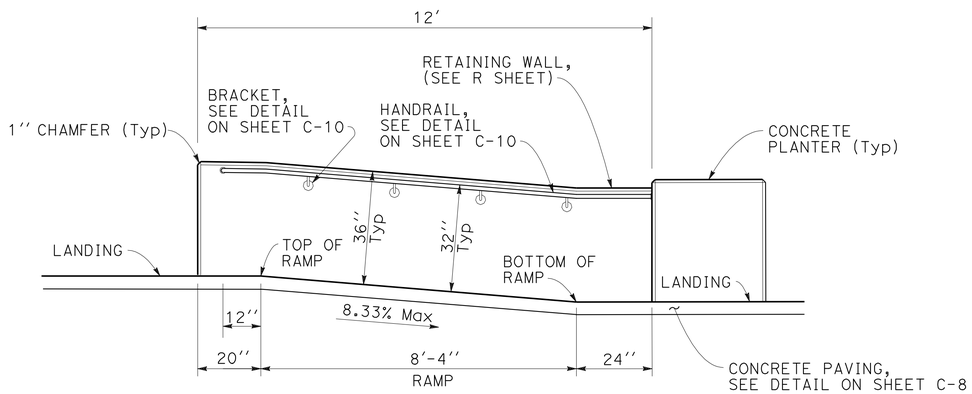

NOTE:

DISTANCE FROM ENDS OF HANDRAIL TO CENTER OF BRACKET SHALL BE 27''.

ELEVATION

MINOR CONCRETE RAMP AND HANDRAIL

WB 1+10.00 TO 1+22.00
WD 1+46.77 TO 1+58.77

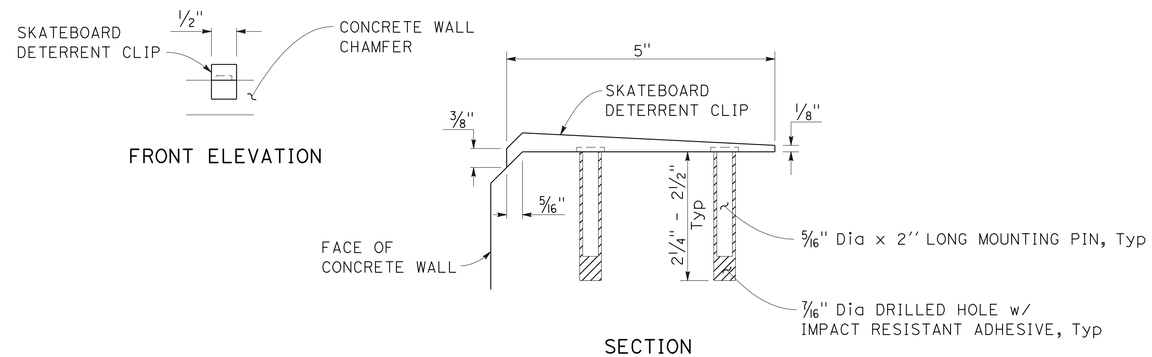

NOTES:

1. MOUNTING PINS SHALL NOT BE VISIBLE FROM THE OUTSIDE SURFACE OF SKATEBOARD DETERRENT CLIP.
2. SKATEBOARD DETERRENT CLIPS SHALL BE LOCATED 18'' FROM ENDS OF WALLS, PLANTERS, BOLLARDS, DOG GATE BASES, SIGN BASES AND EQUALLY SPACED 30'' - 42'' ON CENTER BETWEEN THE END CLIPS.

SKATEBOARD DETERRENT CLIP

CONSTRUCTION DETAILS

NO SCALE

C-9

STATE OF CALIFORNIA - DEPARTMENT OF TRANSPORTATION
Caltrans® DESIGN

FUNCTIONAL SUPERVISOR: MICHAEL T. NGUYEN
CALCULATED-DESIGNED BY: NIEN TRINH
CHECKED BY: MICHAEL T. NGUYEN
REVISED BY: NT
DATE REVISED: 4/6/10

LAST REVISION 06-08-10
DATE PLOTTED => 25-JUN-2010
TIME PLOTTED => 16:26

Dist	COUNTY	ROUTE	POST MILES TOTAL PROJECT	SHEET No.	TOTAL SHEETS
04	SF	80	4.9/5.9	14	127

N. Trinh 4-15-10
REGISTERED CIVIL ENGINEER DATE

6-21-10
PLANS APPROVAL DATE

REGISTERED PROFESSIONAL ENGINEER
Nien Trinh
No. 67739
Exp. 6-30-11
CIVIL
STATE OF CALIFORNIA

THE STATE OF CALIFORNIA OR ITS OFFICERS OR AGENTS SHALL NOT BE RESPONSIBLE FOR THE ACCURACY OR COMPLETENESS OF SCANNED COPIES OF THIS PLAN SHEET.

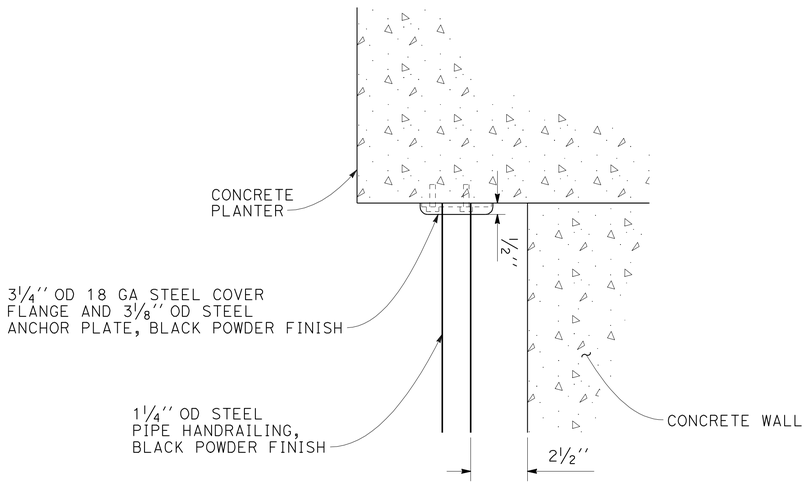

PLAN

HANDRAIL TERMINATION CONCRETE PLANTER

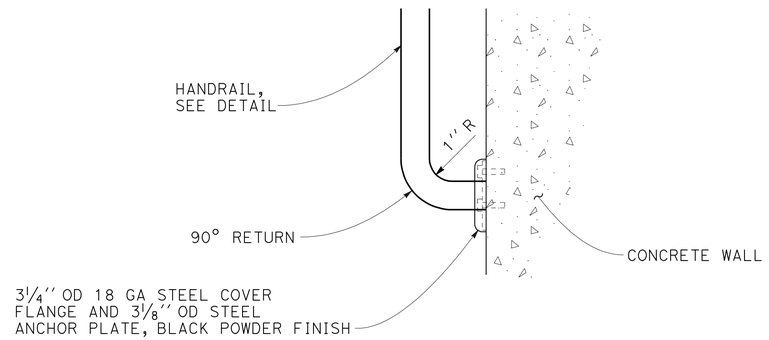

PLAN

HANDRAIL TERMINATION CONCRETE WALL

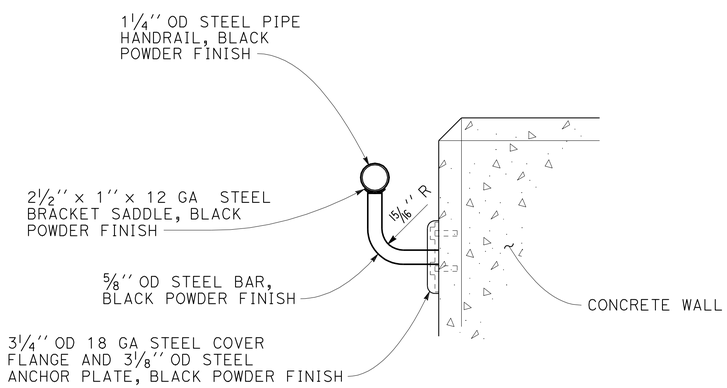

SECTION

HANDRAIL AND BRACKET

CONSTRUCTION DETAILS

NO SCALE

C-10

NIEN TRINH	NT	CALCULATED-DESIGNED BY	
MICHAEL T. NGUYEN	4/6/10	CHECKED BY	
REVISED BY		FUNCTIONAL SUPERVISOR	
DATE REVISED		MICHAEL T. NGUYEN	

STATE OF CALIFORNIA - DEPARTMENT OF TRANSPORTATION
Caltrans®
DESIGN

LAST REVISION 06-12-10
DATE PLOTTED => 25-JUN-2010
TIME PLOTTED => 16:26

Dist	COUNTY	ROUTE	POST MILES TOTAL PROJECT	SHEET No.	TOTAL SHEETS
04	SF	80	4.9/5.9	15	127

REGISTERED CIVIL ENGINEER — DATE 4-15-10

PLANS APPROVAL DATE 6-21-10

REGISTERED PROFESSIONAL ENGINEER — Nien Trinh — No. 67739 — Exp. 6-30-11 — CIVIL — STATE OF CALIFORNIA

THE STATE OF CALIFORNIA OR ITS OFFICERS OR AGENTS SHALL NOT BE RESPONSIBLE FOR THE ACCURACY OR COMPLETENESS OF SCANNED COPIES OF THIS PLAN SHEET.

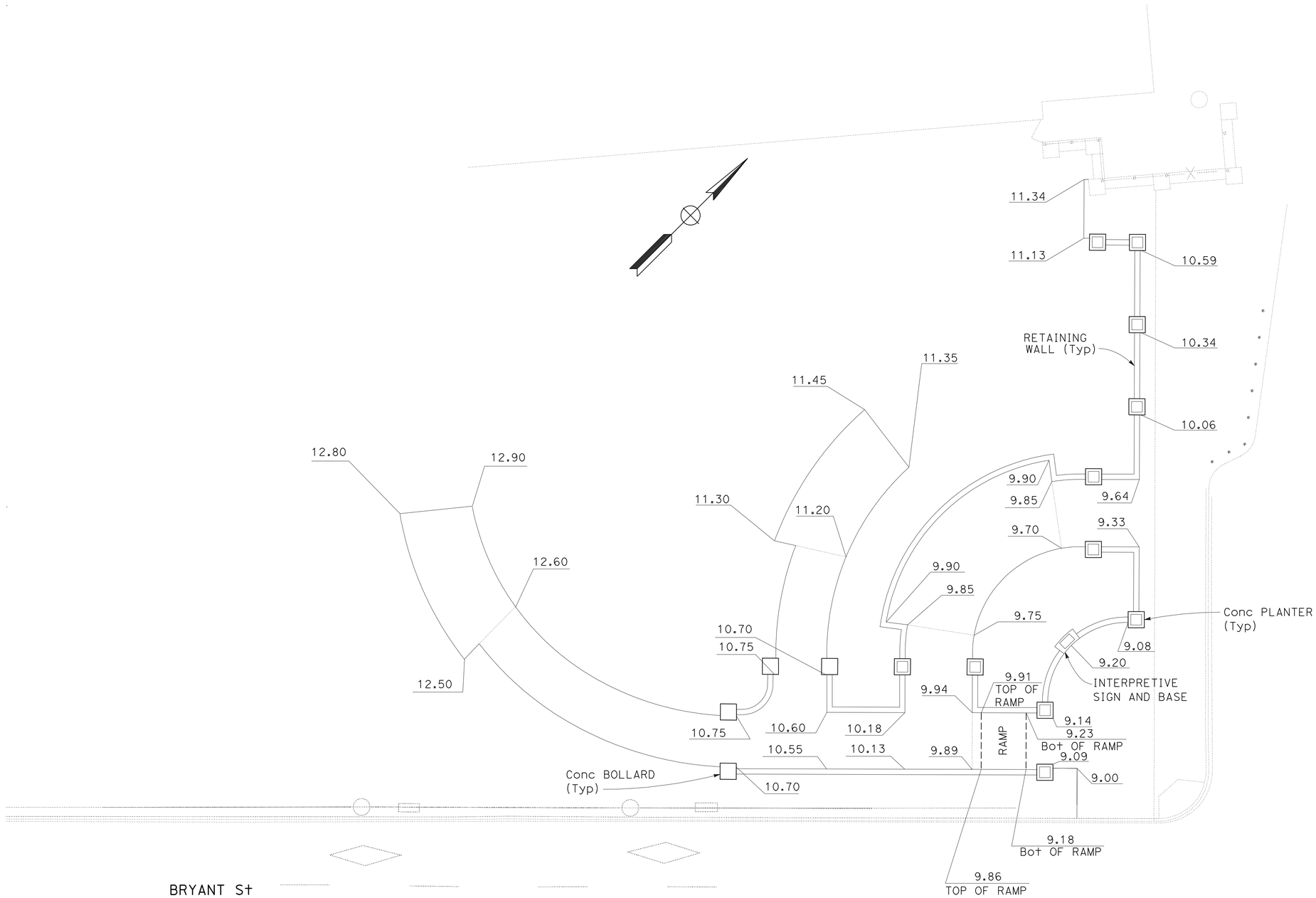

NOTES:

1. ELEVATIONS SHOWN ARE TOP OF CONCRETE PAVEMENT UNLESS OTHERWISE NOTED.
2. SEE (R) SHEETS FOR PROFILE, TOP OF RETAINING WALL, TOP OF PLANTER AND TOP OF BOLLARD ELEVATIONS.
3. FOR ALIGNMENT OF RETAINING WALLS, SEE SHEET C-2.

CONSTRUCTION DETAILS
PAVEMENT ELEVATION
NO SCALE

C-11

REVISED BY	NT
DATE REVISED	4/6/10
CALCULATED-DESIGNED BY	NIEN TRINH
CHECKED BY	MICHAEL T. NGUYEN
FUNCTIONAL SUPERVISOR	MICHAEL T. NGUYEN

STATE OF CALIFORNIA - DEPARTMENT OF TRANSPORTATION — Caltrans — DESIGN

LAST REVISION 06-08-10 | DATE PLOTTED => 25-JUN-2010 | TIME PLOTTED => 16:26

Dist	COUNTY	ROUTE	POST MILES TOTAL PROJECT	SHEET No.	TOTAL SHEETS
04	SF	80	4.9/5.9	16	127

REGISTERED CIVIL ENGINEER 4-15-10 DATE

6-21-10
PLANS APPROVAL DATE

REGISTERED PROFESSIONAL ENGINEER Nien Trinh No. 67739 Exp. 6-30-11 CIVIL STATE OF CALIFORNIA

THE STATE OF CALIFORNIA OR ITS OFFICERS OR AGENTS SHALL NOT BE RESPONSIBLE FOR THE ACCURACY OR COMPLETENESS OF SCANNED COPIES OF THIS PLAN SHEET.

NOTES:

1. 4'' SQ, 12 GAUGE, POST w/ CAP
2. 1 1/2'' SQ, 14 GAUGE, TOP AND BOTTOM RAIL
3. 3/4'' SQ, 14 GAUGE, PICKET
4. 1 3/4'' SQ, 14 GAUGE, GATE END
5. GATE HINGE
6. GATE LATCH HARDWARE. GATE LATCH w/ ACCESSIBLE EXTENSION THAT IS OPERABLE WITH ONE HAND. AFFIX ISA SYMBOL DECAL TO GATE. GATE HINGE AND LATCH SHALL BE PROVIDED BY THE GATE MANUFACTURER, AND SHALL BE INSTALLED PER MANUFACTURERS INSTRUCTION. GATE HINGE AND LATCH SHALL BE STAINLESS STEEL OR ALUMINUM AND SHALL HAVE A BLACK POWDERCOAT FINISH TO MATCH FENCE.
7. DETERMINE ACTUAL DIMENSION REQUIRED TO CONFORM TO EXISTING BARRIER WALL AND BARRIER FENCE PRIOR TO FABRICATION.

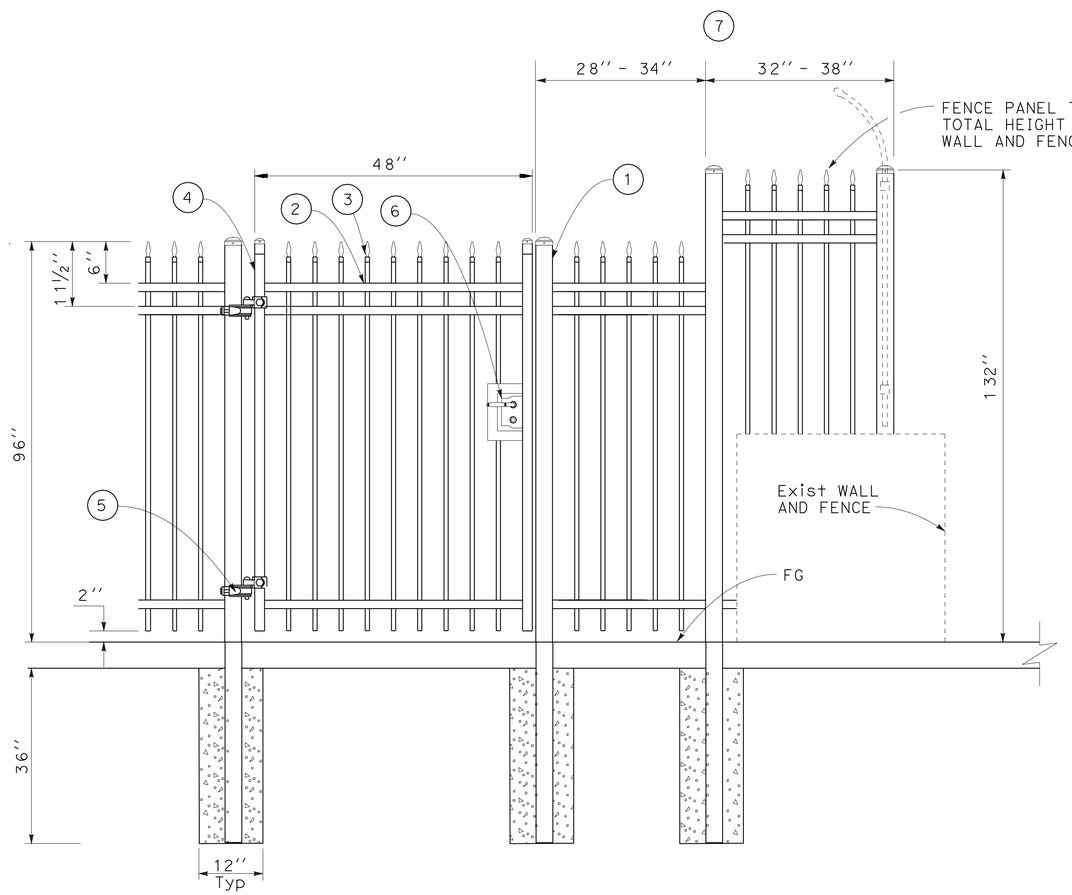

SECTION

8' PICKET GATE AT ANCHORAGE

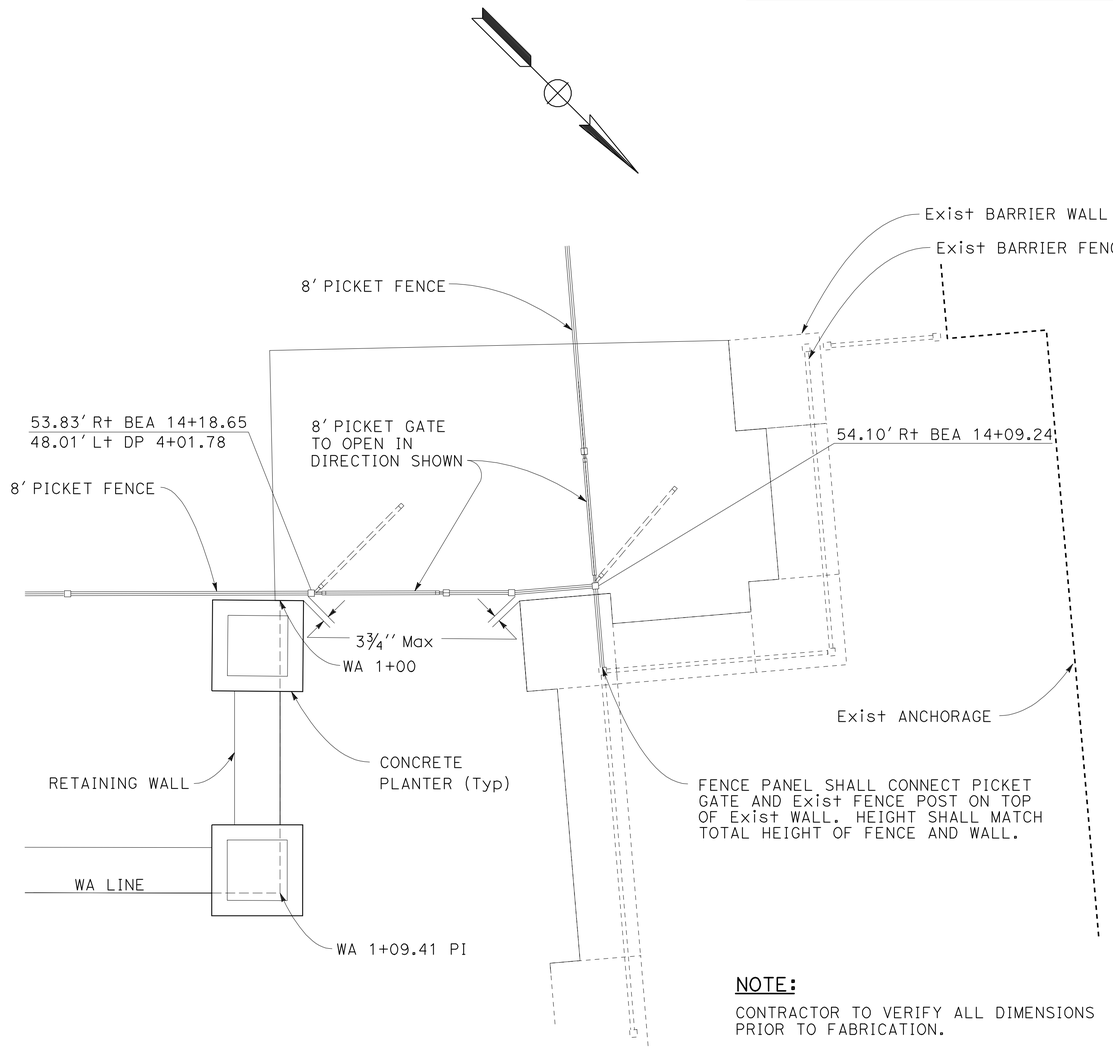

NOTE:

CONTRACTOR TO VERIFY ALL DIMENSIONS PRIOR TO FABRICATION.

PLAN

FENCE AND GATE LAYOUT AT ANCHORAGE

CONSTRUCTION DETAILS

NO SCALE

C-12

REVISED BY	DATE REVISED
NT	4/6/10

CALCULATED-DESIGNED BY: NIEN TRINH
CHECKED BY: MICHAEL T. NGUYEN
FUNCTIONAL SUPERVISOR: MICHAEL T. NGUYEN

STATE OF CALIFORNIA - DEPARTMENT OF TRANSPORTATION
Caltrans
DESIGN

LAST REVISION 06-12-10
DATE PLOTTED => 25-JUN-2010
TIME PLOTTED => 16:26

Dist	COUNTY	ROUTE	POST MILES TOTAL PROJECT	SHEET No.	TOTAL SHEETS
04	SF	80	4.9/5.9	17	127

REGISTERED CIVIL ENGINEER 4-15-10 DATE

6-21-10
PLANS APPROVAL DATE

REGISTERED PROFESSIONAL ENGINEER Nien Trinh No. 67739 Exp. 6-30-11 CIVIL STATE OF CALIFORNIA

THE STATE OF CALIFORNIA OR ITS OFFICERS OR AGENTS SHALL NOT BE RESPONSIBLE FOR THE ACCURACY OR COMPLETENESS OF SCANNED COPIES OF THIS PLAN SHEET.

NOTES:

1. 2 1/2'' SQ, 14 GAUGE, POST w/ CAP
2. 1 1/2'' SQ, 14 GAUGE, TOP AND BOTTOM RAIL
3. 3/4'' SQ, 14 GAUGE, PICKET w/ ROUNDED-TIP SPEAR TOP

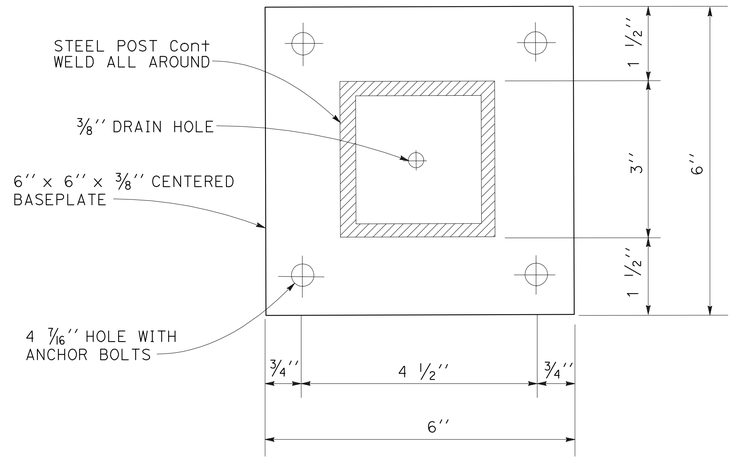

SURFACE MOUNT DETAIL

NOTES:

1. FENCE SHALL BE SURFACE MOUNTED AT FRONT EDGE OF EXISTING BARRIER WALL ON BRYANT STREET SIDE.
2. CONTRACTOR TO VERIFY ALL DIMENSIONS PRIOR TO FABRICATION.

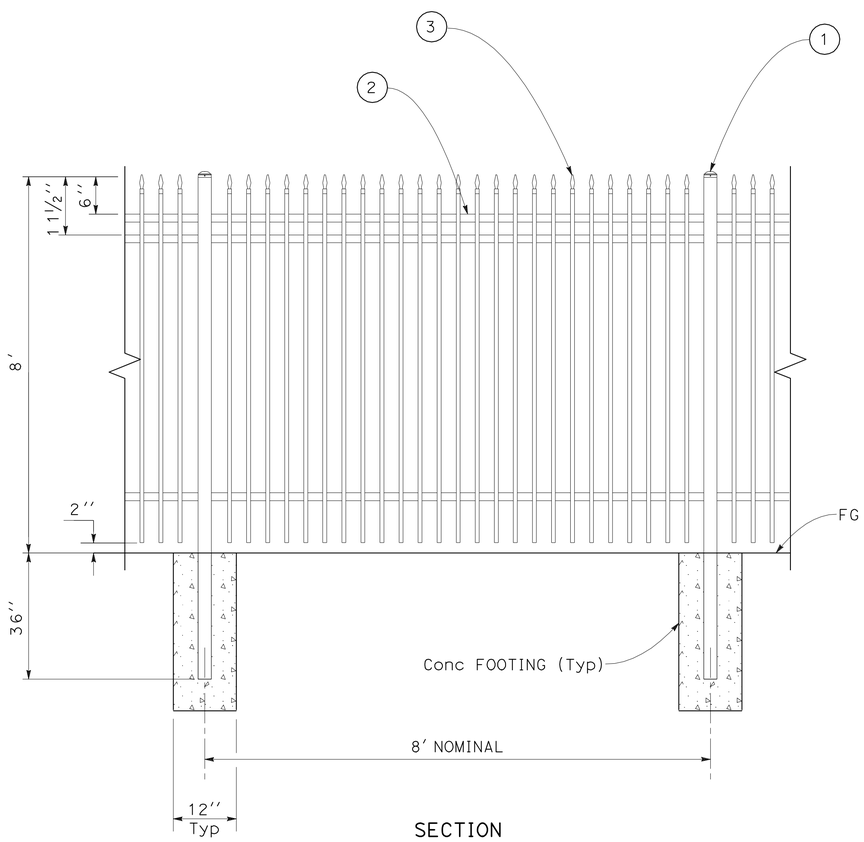

SECTION

PICKET FENCE

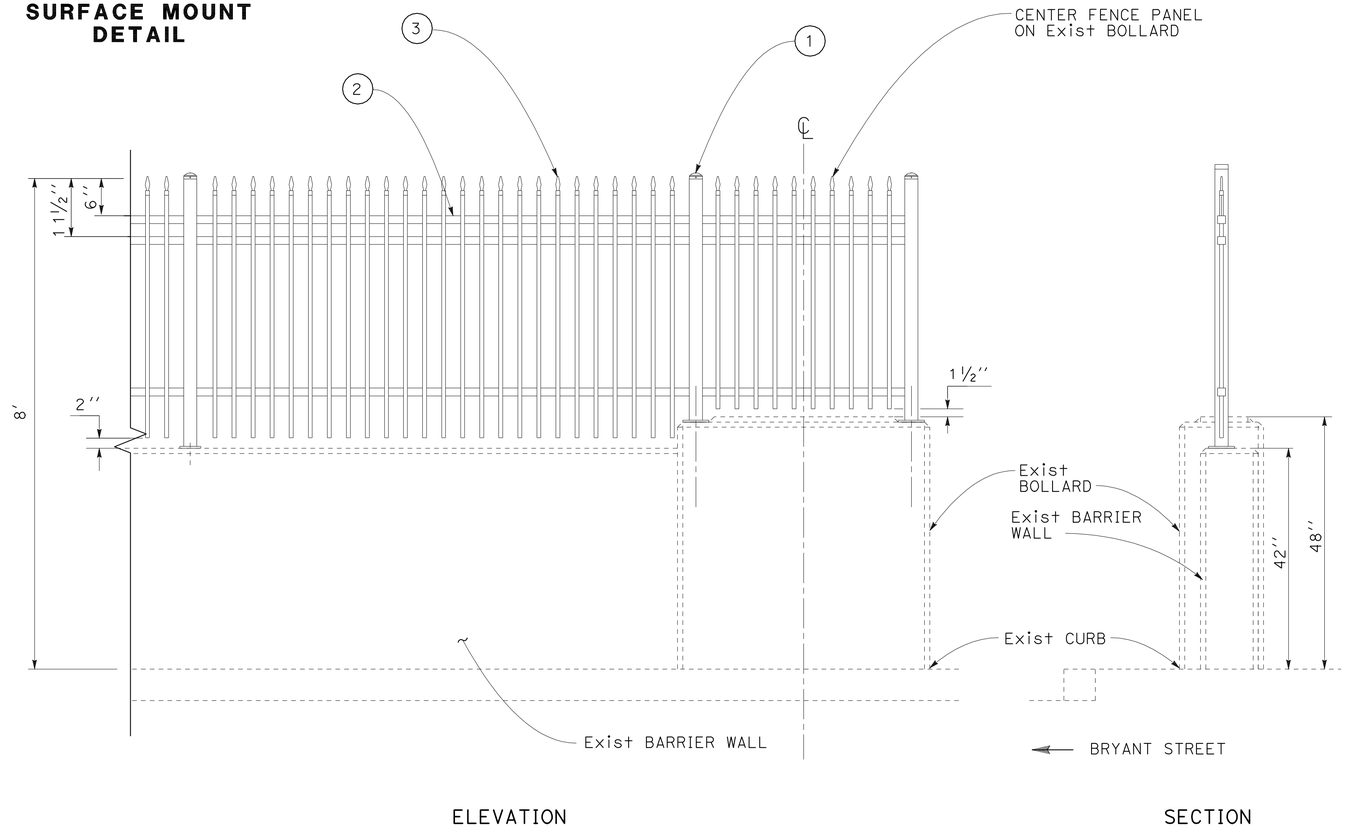

ELEVATION

SECTION

PICKET RAILING

CONSTRUCTION DETAILS

NO SCALE

C-13

REVISED BY	DATE REVISED
NT	4/6/10

NIEN TRINH — CALCULATED-DESIGNED BY
MICHAEL T. NGUYEN — CHECKED BY
MICHAEL T. NGUYEN — FUNCTIONAL SUPERVISOR

STATE OF CALIFORNIA - DEPARTMENT OF TRANSPORTATION
Caltrans
DESIGN

LAST REVISION 06-08-10 | DATE PLOTTED => 25-JUN-2010 | TIME PLOTTED => 16:26

Dist	COUNTY	ROUTE	POST MILES TOTAL PROJECT	SHEET No.	TOTAL SHEETS
04	SF	80	4.9/5.9	18	127

REGISTERED CIVIL ENGINEER 4-15-10 DATE

6-21-10
PLANS APPROVAL DATE

REGISTERED PROFESSIONAL ENGINEER Nien Trinh No. 67739 Exp. 6-30-11 CIVIL STATE OF CALIFORNIA

THE STATE OF CALIFORNIA OR ITS OFFICERS OR AGENTS SHALL NOT BE RESPONSIBLE FOR THE ACCURACY OR COMPLETENESS OF SCANNED COPIES OF THIS PLAN SHEET.

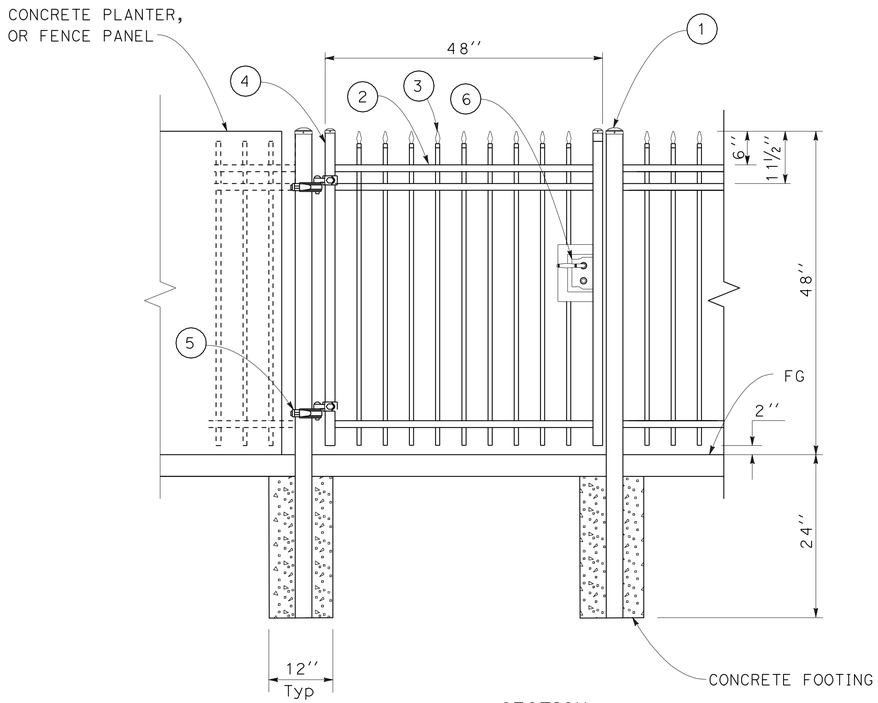

SECTION

4' PICKET GATE AND FENCE

NOTES:

1. 3'' SQ, 12 GAUGE, POST w/ CAP
2. 1 1/2'' SQ, 14 GAUGE, TOP AND BOTTOM RAIL
3. 3/4'' SQ, 14 GAUGE, PICKET
4. 1 3/4'' SQ, 14 GAUGE, GATE END
5. GATE HINGE
6. GATE LATCH HARDWARE. GATE LATCH w/ ACCESSIBLE EXTENSION THAT IS OPERABLE w/ ONE HAND. AFFIX ISA SYMBOL DECAL TO GATE GATE HINGE AND LATCH SHALL BE PROVIDED BY THE GATE MANUFACTURER, AND SHALL BE INSTALLED PER MANUFACTURERS INSTRUCTION. GATE HINGE AND LATCH SHALL BE STAINLESS STEEL OR ALUMINUM AND SHALL HAVE A BLACK POWDERCOAT FINISH TO MATCH FENCE.

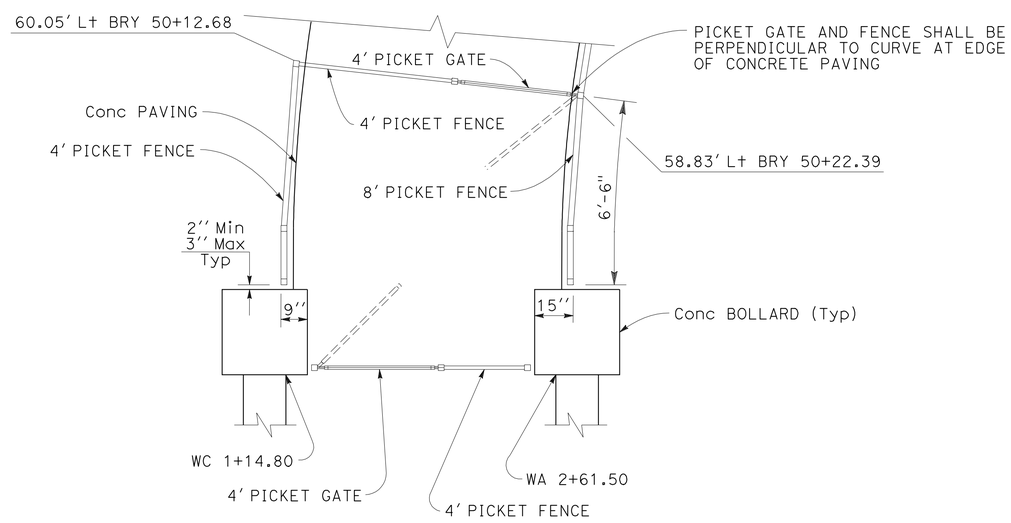

DOG GATE 1

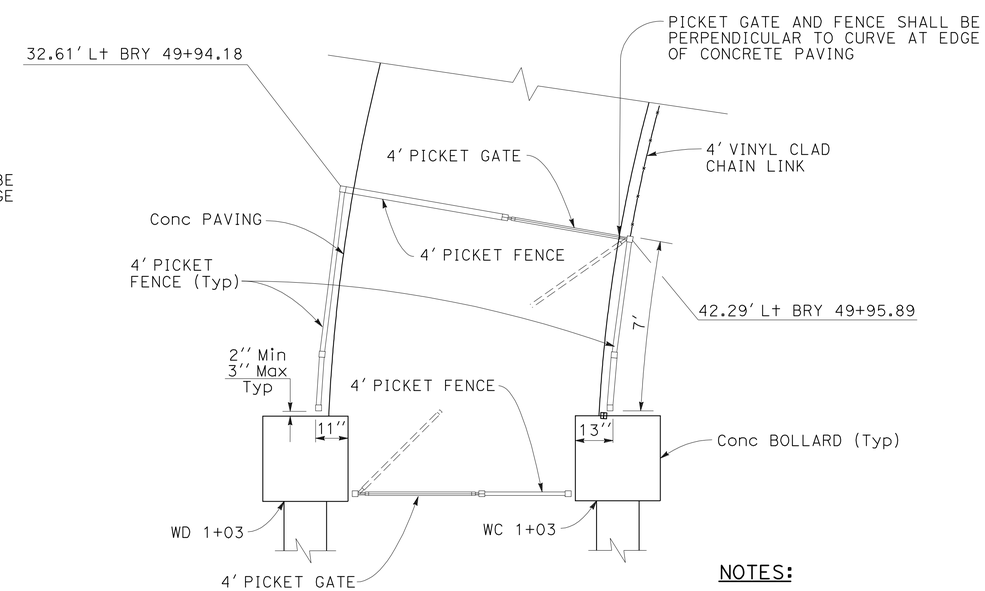

DOG GATE 2

NOTES:

1. POSTS SHALL BE LOCATED 1 1/2'' FROM EDGE OF PAVING.
2. GATES TO OPEN IN DIRECTION SHOWN.
3. CONTRACTOR TO VERIFY ALL DIMENSIONS PRIOR TO FABRICATION.

PLAN

GATE LAYOUT

CONSTRUCTION DETAILS

NO SCALE

C-14

NT	4/6/10
REVISED BY	DATE REVISED
NIEN TRINH	MICHAEL T. NGUYEN
CALCULATED-DESIGNED BY	CHECKED BY
FUNCTIONAL SUPERVISOR	MICHAEL T. NGUYEN

STATE OF CALIFORNIA - DEPARTMENT OF TRANSPORTATION

Caltrans® **DESIGN**

LAST REVISION 06-12-10 | DATE PLOTTED => 25-JUN-2010 | TIME PLOTTED => 16:26

Dist	COUNTY	ROUTE	POST MILES TOTAL PROJECT	SHEET No.	TOTAL SHEETS
04	SF	80	4.9/5.9	19	127

REGISTERED CIVIL ENGINEER 4-15-10 DATE

6-21-10
PLANS APPROVAL DATE

REGISTERED PROFESSIONAL ENGINEER Nien Trinh No. 67739 Exp. 6-30-11 CIVIL STATE OF CALIFORNIA

THE STATE OF CALIFORNIA OR ITS OFFICERS OR AGENTS SHALL NOT BE RESPONSIBLE FOR THE ACCURACY OR COMPLETENESS OF SCANNED COPIES OF THIS PLAN SHEET.

NOTES:

1. 4'' SQ, 12 GAUGE, POST w/ CAP
2. 1 1/2'' SQ, 14 GAUGE, TOP AND BOTTOM RAIL
3. 3/4'' SQ, 14 GAUGE, PICKET
4. 1 3/4'' SQ, 14 GAUGE, GATE END
5. GATE HINGE
6. GATE LATCH HARDWARE. GATE LATCH w/ ACCESSIBLE EXTENSION THAT IS OPERABLE w/ ONE HAND. AFFIX ISA SYMBOL DECAL TO GATE GATE HINGE AND LATCH SHALL BE PROVIDED BY THE GATE MANUFACTURER, AND SHALL BE INSTALLED PER MANUFACTURERS INSTRUCTION. GATE HINGE AND LATCH SHALL BE STAINLESS STEEL OR ALUMINUM AND SHALL HAVE A BLACK POWDERCOAT FINISH TO MATCH FENCE.

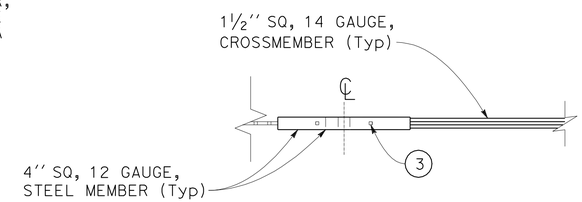

DETAIL
PLAN

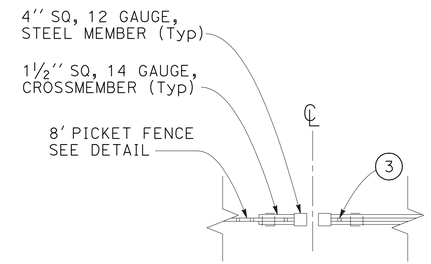

SECTION A-A

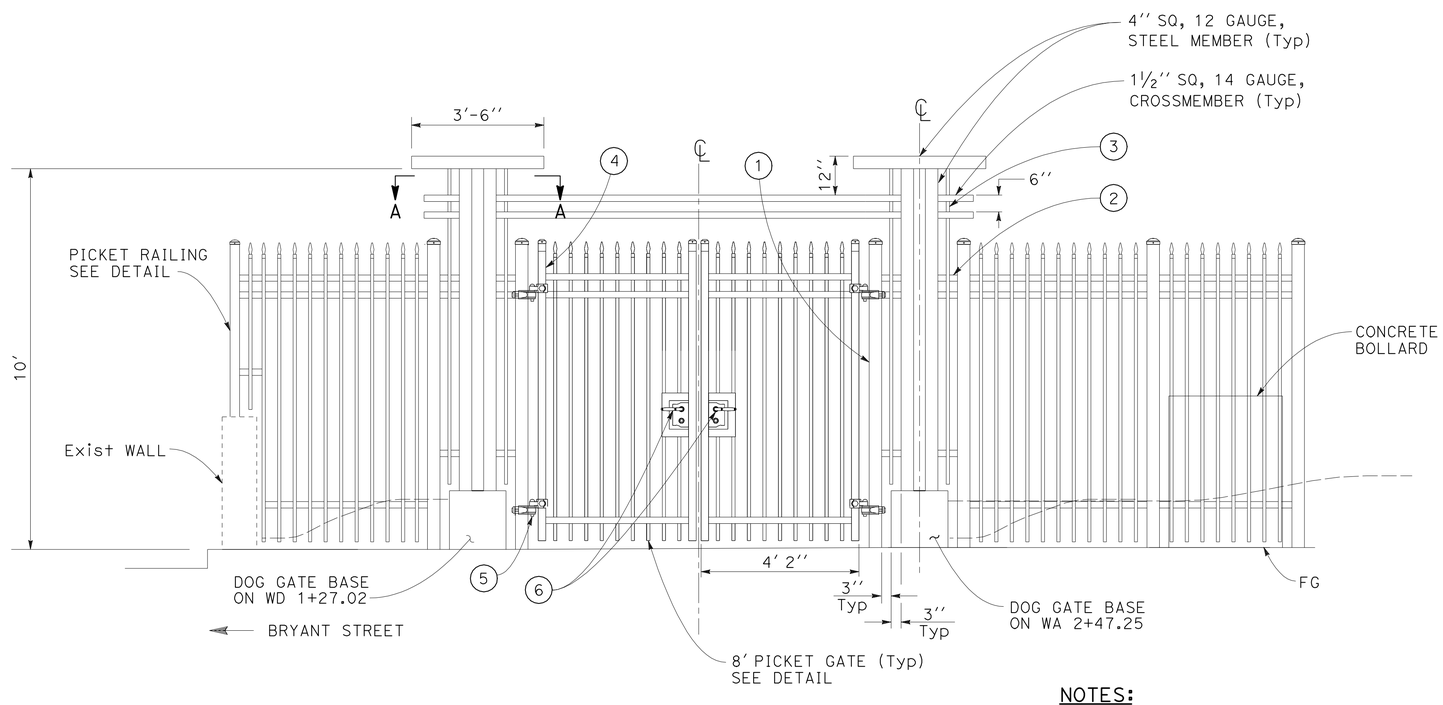

ELEVATION

DOG PLAY AREA ENTRY

NOTES:

1. 4'' SQ, 12 GAUGE STEEL MEMBER AND 1 1/2'' SQ, 14 GAUGE, CROSSMEMBER SHALL BE THE SAME MATERIAL AS PICKET FENCE POSTS AND RAILS.
2. CONTRACTOR TO VERIFY ALL DIMENSIONS PRIOR TO FABRICATION.

CONSTRUCTION DETAILS
NO SCALE

C-15

STATE OF CALIFORNIA - DEPARTMENT OF TRANSPORTATION
Caltrans® DESIGN

FUNCTIONAL SUPERVISOR: MICHAEL T. NGUYEN
CALCULATED-DESIGNED BY: NIEN TRINH
CHECKED BY: MICHAEL T. NGUYEN
REVISED BY: NT
DATE REVISED: 4/6/10

LAST REVISION 06-12-10 | DATE PLOTTED => 25-JUN-2010 | TIME PLOTTED => 16:26

Dist	COUNTY	ROUTE	POST MILES TOTAL PROJECT	SHEET No.	TOTAL SHEETS
04	SF	80	4.9/5.9	20	127

N. Trinh 4-15-10
REGISTERED CIVIL ENGINEER DATE

6-21-10
PLANS APPROVAL DATE

REGISTERED PROFESSIONAL ENGINEER
Nien Trinh
No. 67739
Exp. 6-30-11
CIVIL
STATE OF CALIFORNIA

THE STATE OF CALIFORNIA OR ITS OFFICERS OR AGENTS SHALL NOT BE RESPONSIBLE FOR THE ACCURACY OR COMPLETENESS OF SCANNED COPIES OF THIS PLAN SHEET.

NOTE:

FOR ACCURATE RIGHT OF WAY AND ACCESS DATA,
CONTACT RIGHT OF WAY ENGINEERING AT THE DISTRICT OFFICE.

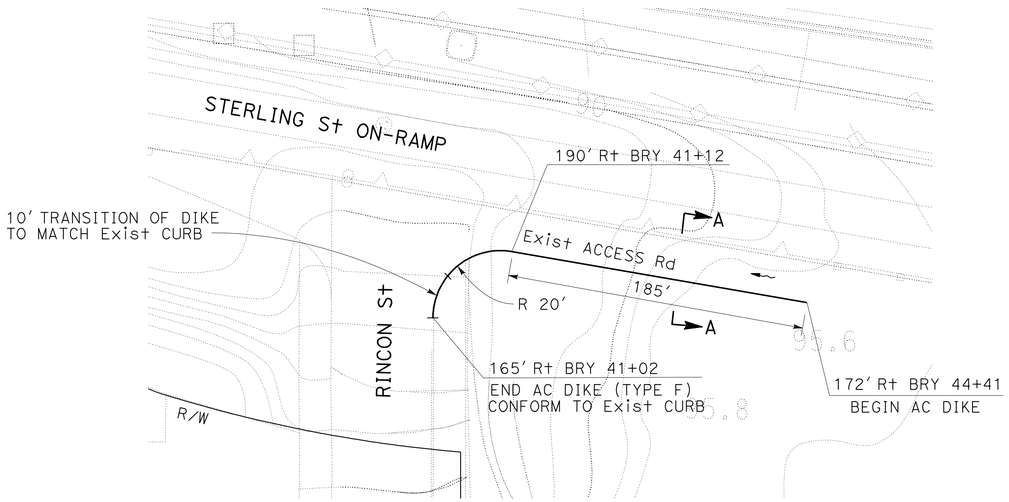

PLAN
RINCON St

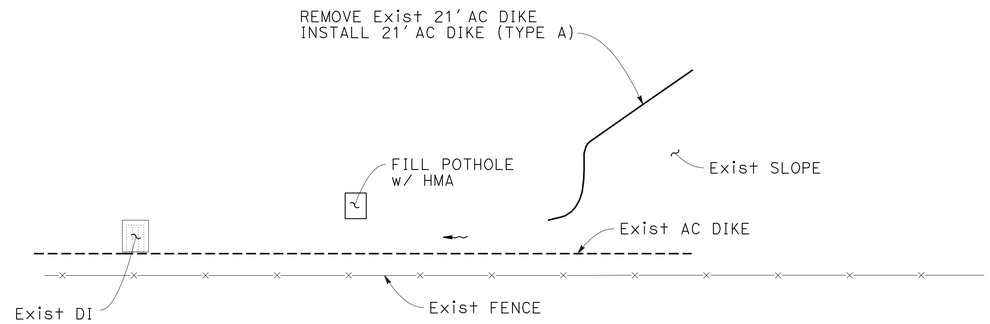

PLAN
CLOCK TOWER AT 2ND St

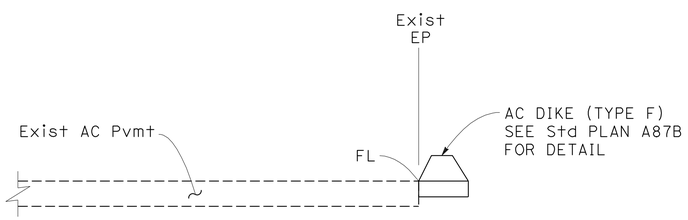

SECTION A-A

CONSTRUCTION DETAILS
NO SCALE

C-16

NIEN TRINH	NT
REVISED BY	DATE REVISED
MICHAEL T. NGUYEN	4/6/10
CALCULATED-DESIGNED BY	
CHECKED BY	
FUNCTIONAL SUPERVISOR	
MICHAEL T. NGUYEN	

STATE OF CALIFORNIA - DEPARTMENT OF TRANSPORTATION
Caltrans
DESIGN

LAST REVISION 06-08-10 | DATE PLOTTED => 28-JUN-2010 | TIME PLOTTED => 14:17

Dist	COUNTY	ROUTE	POST MILES TOTAL PROJECT	SHEET No.	TOTAL SHEETS
04	SF	80	4.9/5.9	21	127

REGISTERED CIVIL ENGINEER — DATE 4-15-10

6-21-10
PLANS APPROVAL DATE

REGISTERED PROFESSIONAL ENGINEER — Nien Trinh — No. 67739 — Exp. 6-30-11 — CIVIL — STATE OF CALIFORNIA

THE STATE OF CALIFORNIA OR ITS OFFICERS OR AGENTS SHALL NOT BE RESPONSIBLE FOR THE ACCURACY OR COMPLETENESS OF SCANNED COPIES OF THIS PLAN SHEET.

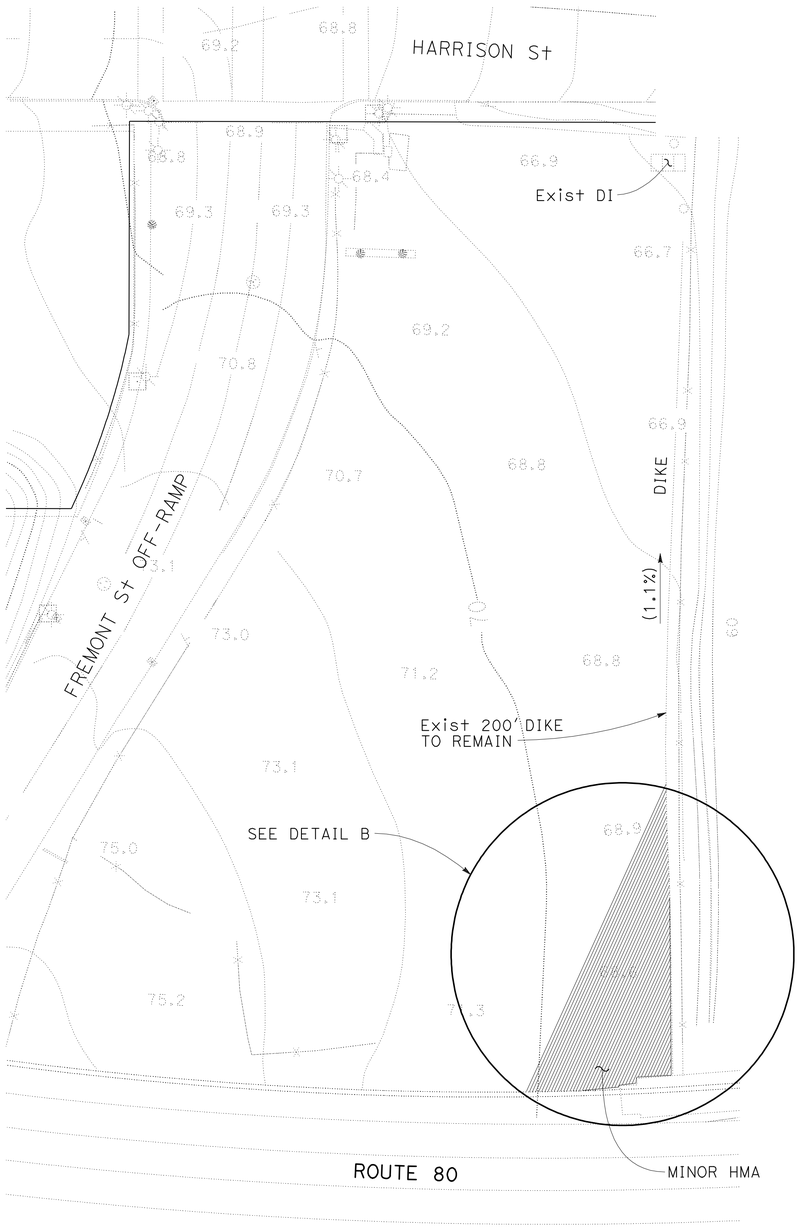

PLAN

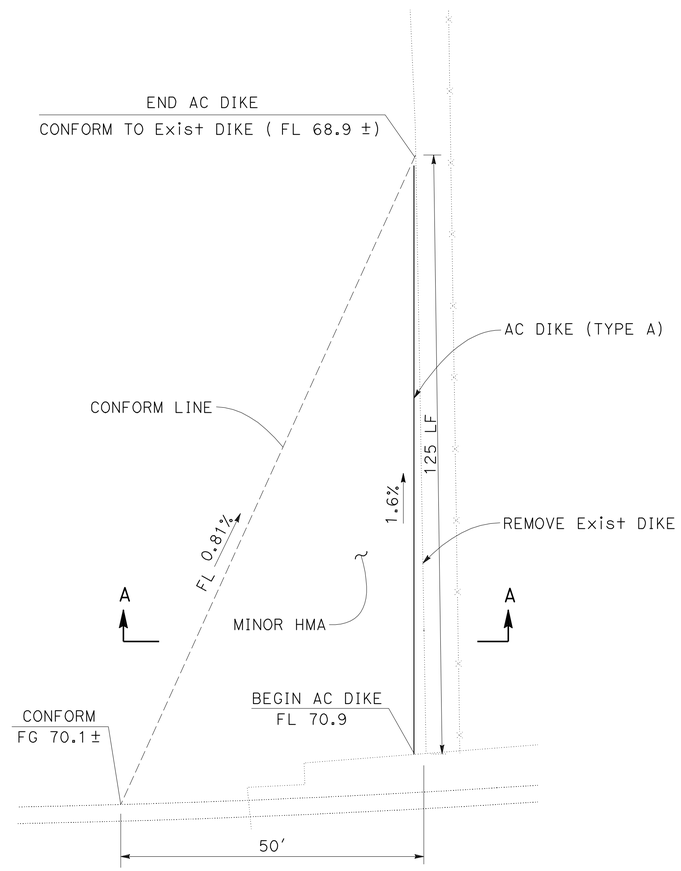

DETAIL B

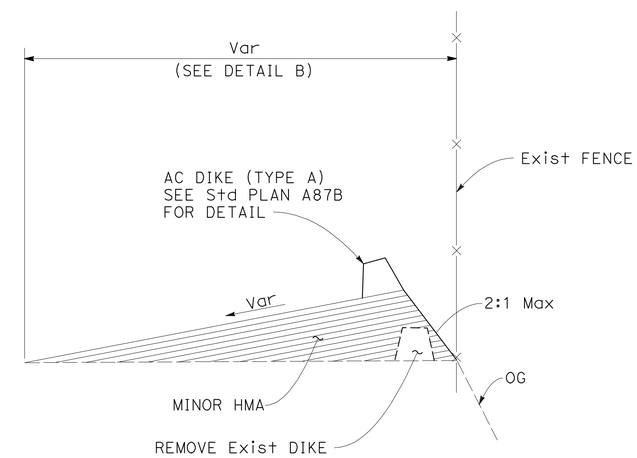

SECTION A-A

HARRISON STREET PARKING LOT

CONSTRUCTION DETAILS

NO SCALE

C-17

NIEN TRINH	REVISED BY NT
MICHAEL T. NGUYEN	DATE REVISED 4/6/10
CALCULATED-DESIGNED BY	
CHECKED BY	
FUNCTIONAL SUPERVISOR MICHAEL T. NGUYEN	

STATE OF CALIFORNIA - DEPARTMENT OF TRANSPORTATION
Caltrans
DESIGN

LAST REVISION 04-13-10
DATE PLOTTED => 25-JUN-2010
TIME PLOTTED => 16:27

Dist	COUNTY	ROUTE	POST MILES TOTAL PROJECT	SHEET No.	TOTAL SHEETS
04	SF	80	4.9/5.9	22	127

REGISTERED CIVIL ENGINEER — DATE 4-15-10

PLANS APPROVAL DATE 6-21-10

REGISTERED PROFESSIONAL ENGINEER — Nien Trinh — No. 67739 — Exp. 6-30-11 — CIVIL — STATE OF CALIFORNIA

THE STATE OF CALIFORNIA OR ITS OFFICERS OR AGENTS SHALL NOT BE RESPONSIBLE FOR THE ACCURACY OR COMPLETENESS OF SCANNED COPIES OF THIS PLAN SHEET.

LEGEND: (THIS SHEET ONLY)

- MINOR CONCRETE (AGGREGATE PAVING)
- MINOR CONCRETE PAVING

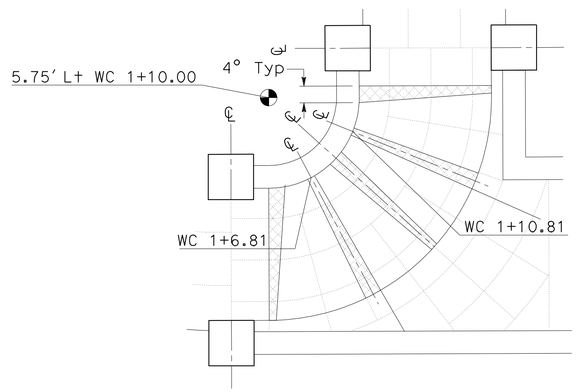

DETAIL A
SCALE 1′′ = 5′

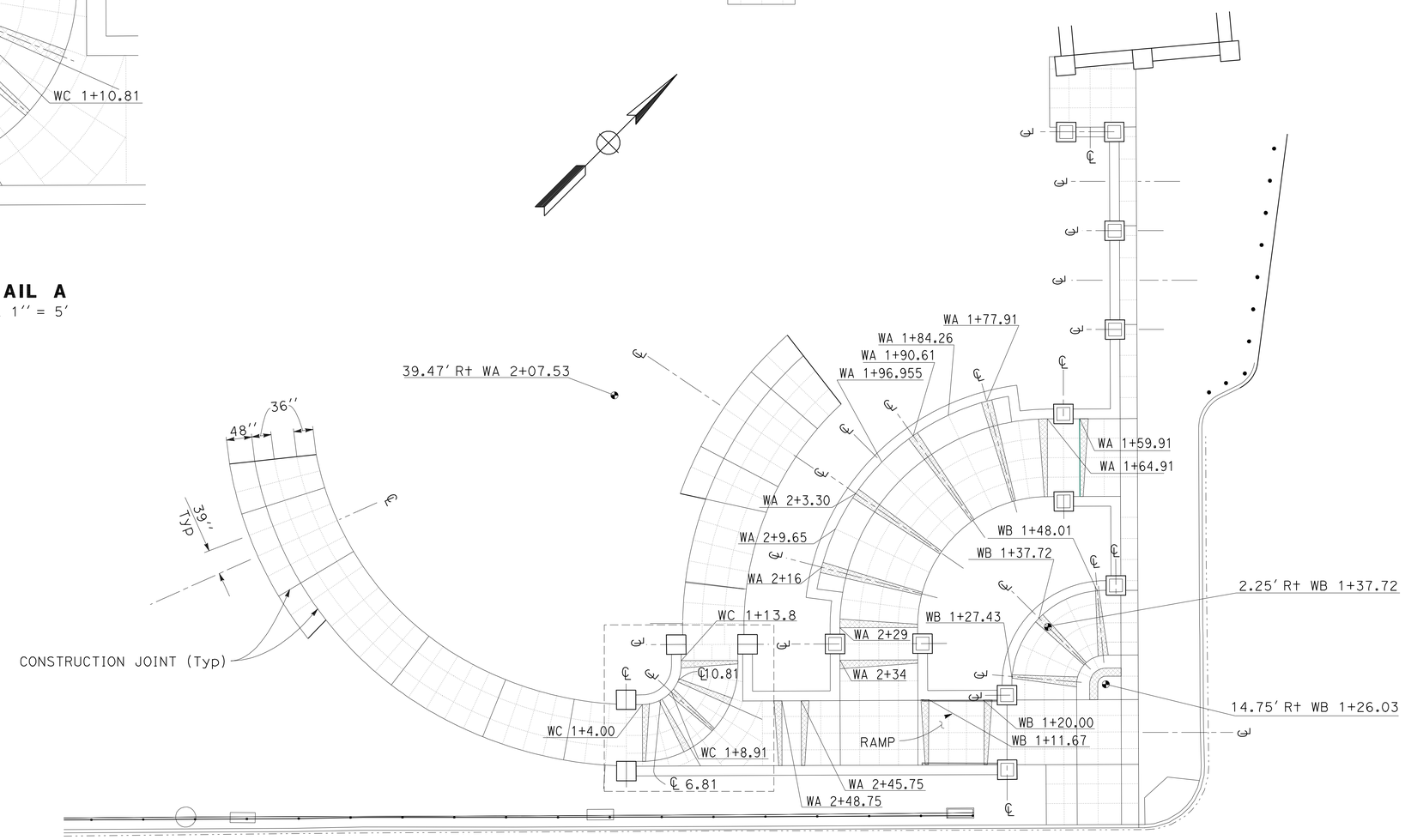

NOTE:

THIS PLAN PROVIDES SUPPLEMENTAL INFORMATION TO PAVEMENT LAYOUT PLAN, SEE PAVEMENT LAYOUT SHEET C-7 FOR ADDITIONAL INFORMATION.

CONSTRUCTION DETAILS
PAVEMENT LAYOUT (SUPPLEMENTAL)
BRYANT AND BEALE STREET
SCALE 1" = 10′

C-18

REVISED BY	DATE REVISED
NT	4/6/10

NIEN TRINH — CALCULATED-DESIGNED BY
MICHAEL T. NGUYEN — CHECKED BY
FUNCTIONAL SUPERVISOR: MICHAEL T. NGUYEN

STATE OF CALIFORNIA - DEPARTMENT OF TRANSPORTATION
Caltrans
DESIGN

LAST REVISION 06-10-10 | DATE PLOTTED => 25-JUN-2010 | TIME PLOTTED => 16:27

Dist	COUNTY	ROUTE	POST MILES TOTAL PROJECT	SHEET No.	TOTAL SHEETS
04	SF	80	4.9/5.9	23	127

REGISTERED CIVIL ENGINEER — DATE 4-15-10

PLANS APPROVAL DATE 6-21-10

REGISTERED PROFESSIONAL ENGINEER — Nien Trinh — No. 67739 — Exp. 6-30-11 — CIVIL — STATE OF CALIFORNIA

THE STATE OF CALIFORNIA OR ITS OFFICERS OR AGENTS SHALL NOT BE RESPONSIBLE FOR THE ACCURACY OR COMPLETENESS OF SCANNED COPIES OF THIS PLAN SHEET.

NOTES:

1. FOR RETAINING WALL PROFILES AND RETURN WALL, SEE R SHEETS.
2. FOR WALL LAYOUT PLAN, SEE SHEET C-2.
3. FOR DETAILS OF ARCHITECTURAL LIGHTS, SEE ELECTRICAL SHEETS.
4. FOR OTHER DETAILS NOT SHOWN, SEE CONSTRUCTION DETAIL SHEET.

LEGEND: (FOR THIS SHEET ONLY)

ARCHITECTURAL LIGHT TYPE III

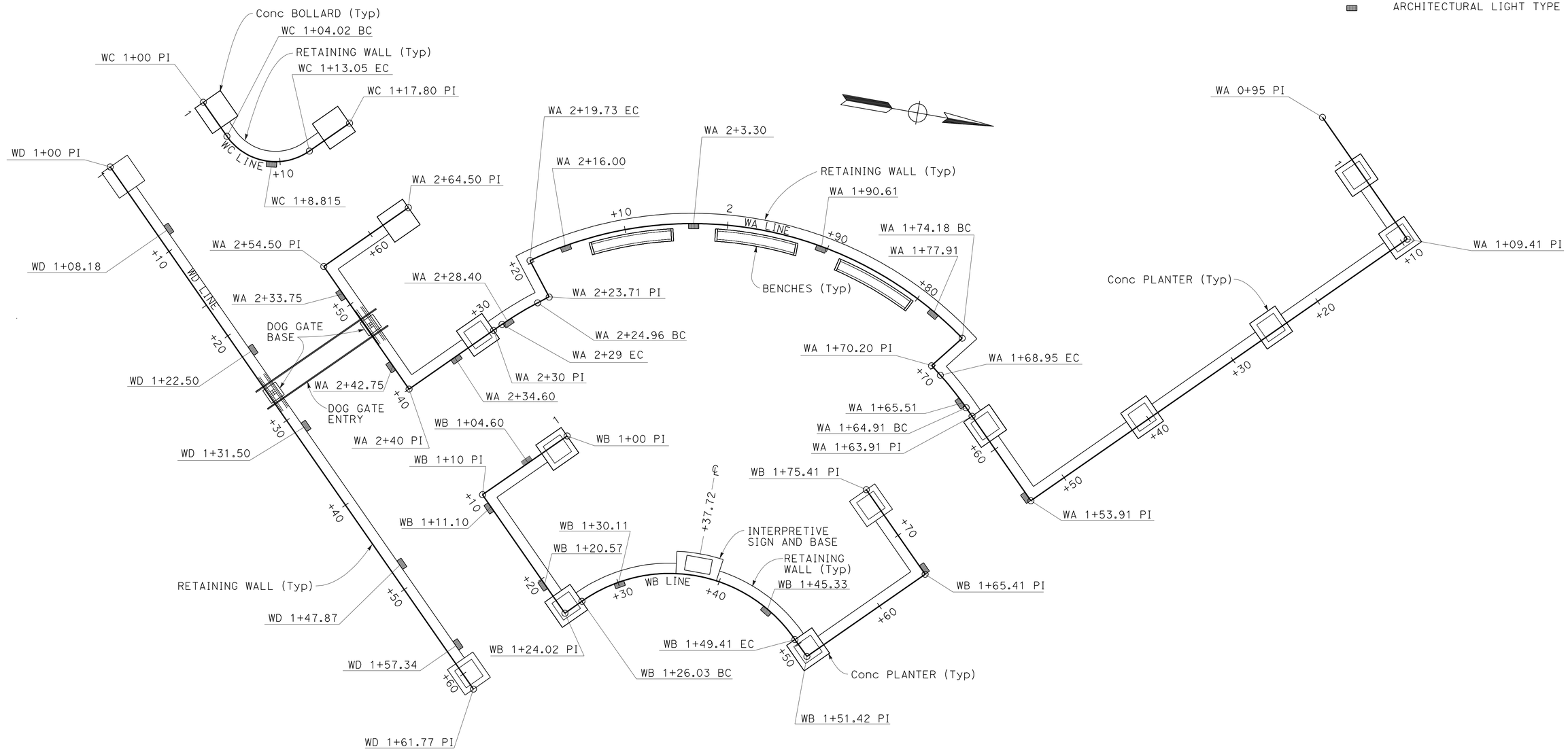

CONSTRUCTION DETAILS
WALL LIGHT LAYOUT
BRYANT AND BEALE STREET

SCALE 1" = 5'

THIS PLAN ACCURATE FOR WALL WORK ONLY

C-19

REVISED BY	DATE REVISED
NT	4/6/10

NIEN TRINH — CALCULATED-DESIGNED BY
MICHAEL T. NGUYEN — CHECKED BY
MICHAEL T. NGUYEN — FUNCTIONAL SUPERVISOR

STATE OF CALIFORNIA - DEPARTMENT OF TRANSPORTATION
Caltrans
DESIGN

LAST REVISION 06-12-10 — DATE PLOTTED => 28-JUN-2010 — TIME PLOTTED => 07:35

Dist	COUNTY	ROUTE	POST MILES TOTAL PROJECT	SHEET No.	TOTAL SHEETS
04	SF	80	4.9/5.9	24	127

REGISTERED CIVIL ENGINEER 6-09-10 DATE

6-21-10
PLANS APPROVAL DATE

REGISTERED PROFESSIONAL ENGINEER Nien Trinh No. 67739 Exp. 6-30-11 CIVIL STATE OF CALIFORNIA

THE STATE OF CALIFORNIA OR ITS OFFICERS OR AGENTS SHALL NOT BE RESPONSIBLE FOR THE ACCURACY OR COMPLETENESS OF SCANNED COPIES OF THIS PLAN SHEET.

NOTES:

1. ROADWAY EXCAVATION LIMIT TO INCLUDE ANY SUB-EXCAVATION NEEDED TO REMOVE EXISTING ASPHALT CONCRETE LAYER.
2. FOR GRADING CONTOUR SEE G-1.

LEGEND: (THIS SHEET ONLY)

- ROADWAY EXCAVATION TYPE Z-2
- LIMITS OF ASPHALT CONCRETE REMOVAL
- ROADWAY SUB-EXCAVATION

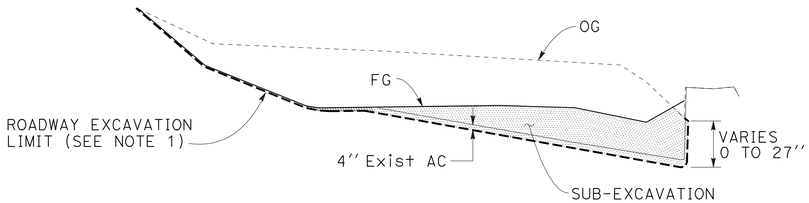

SECTION A-A
NO SCALE

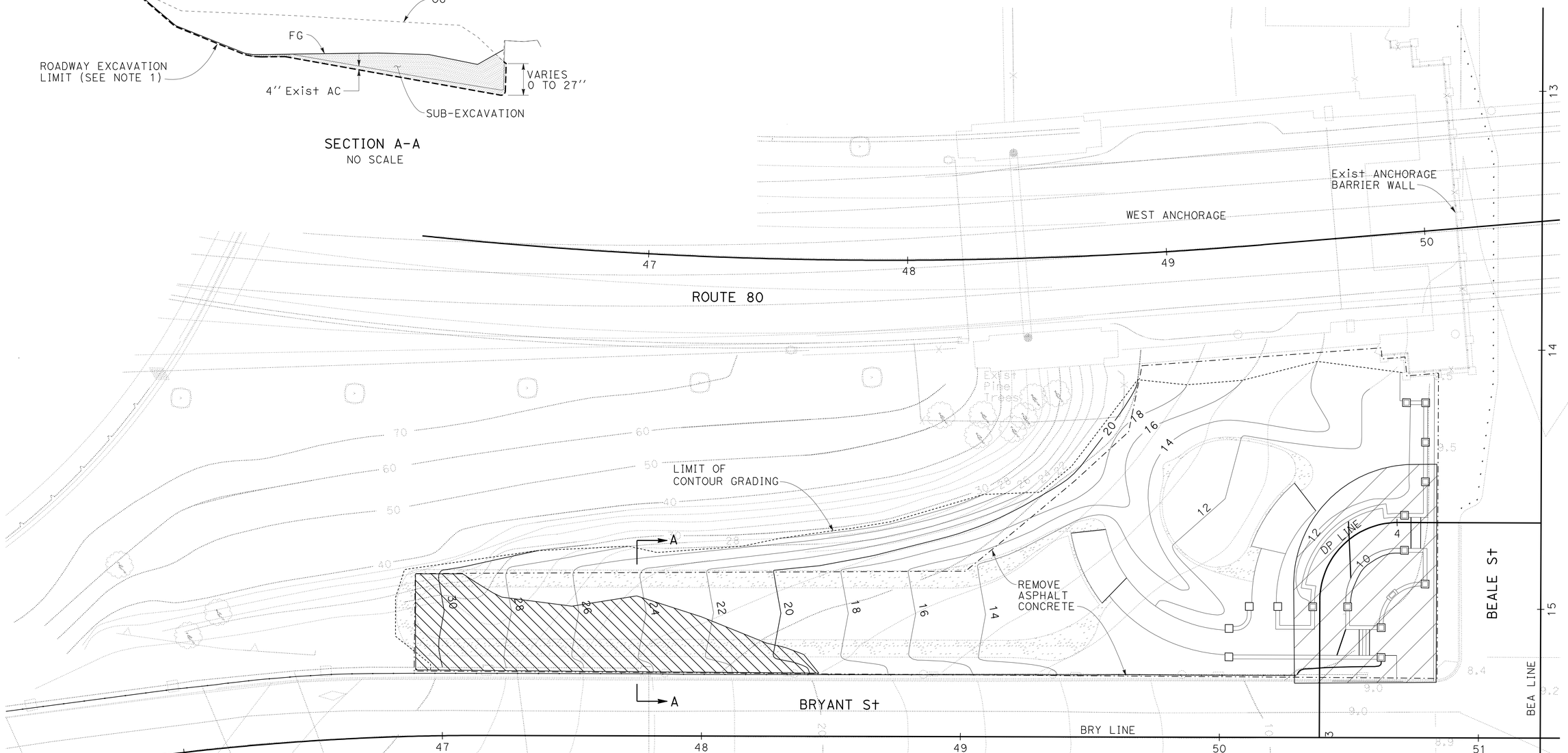

CONSTRUCTION DETAILS
ROADWAY EXCAVATION DETAIL
SCALE 1" = 20'

C-20

STATE OF CALIFORNIA - DEPARTMENT OF TRANSPORTATION
Caltrans
DESIGN

FUNCTIONAL SUPERVISOR: MICHAEL T. NGUYEN
CALCULATED-DESIGNED BY: NIEN TRINH
CHECKED BY: MICHAEL T. NGUYEN
REVISED BY: NT
DATE REVISED: 4/6/10

LAST REVISION 06-12-10
DATE PLOTTED => 28-JUN-2010
TIME PLOTTED => 14:17

Dist	COUNTY	ROUTE	POST MILES TOTAL PROJECT	SHEET No.	TOTAL SHEETS
04	SF	80	4.9/5.9	25	127

Alex McDonald
LICENSED LANDSCAPE ARCHITECT

6-21-10
PLANS APPROVAL DATE

LICENSED LANDSCAPE ARCHITECT
ALEXANDER K. MCDONALD No. 5342
Alex McDonald
Signature
08-31-10
Renewal Date
4-15-10
Date
STATE OF CALIFORNIA

THE STATE OF CALIFORNIA OR ITS OFFICERS OR AGENTS SHALL NOT BE RESPONSIBLE FOR THE ACCURACY OR COMPLETENESS OF SCANNED COPIES OF THIS PLAN SHEET.

NOTE:

FOR ACCURATE RIGHT OF WAY AND ACCESS DATA, CONTACT RIGHT OF WAY ENGINEERING AT THE DISTRICT OFFICE.

LEGEND:

EROSION CONTROL (TYPE 1)
EROSION CONTROL (COMPOST BLANKET)
EROSION CONTROL (HYDROSEED)

EROSION CONTROL (TYPE 2)
EROSION CONTROL (COMPOST BLANKET)
ROLLED EROSION CONTROL PRODUCT (NETTING)

EROSION CONTROL (TYPE 3)
EROSION CONTROL (COMPOST BLANKET)

EROSION CONTROL (TYPE 4)
COMPOST, INCORPORATE

FIBER ROLLS

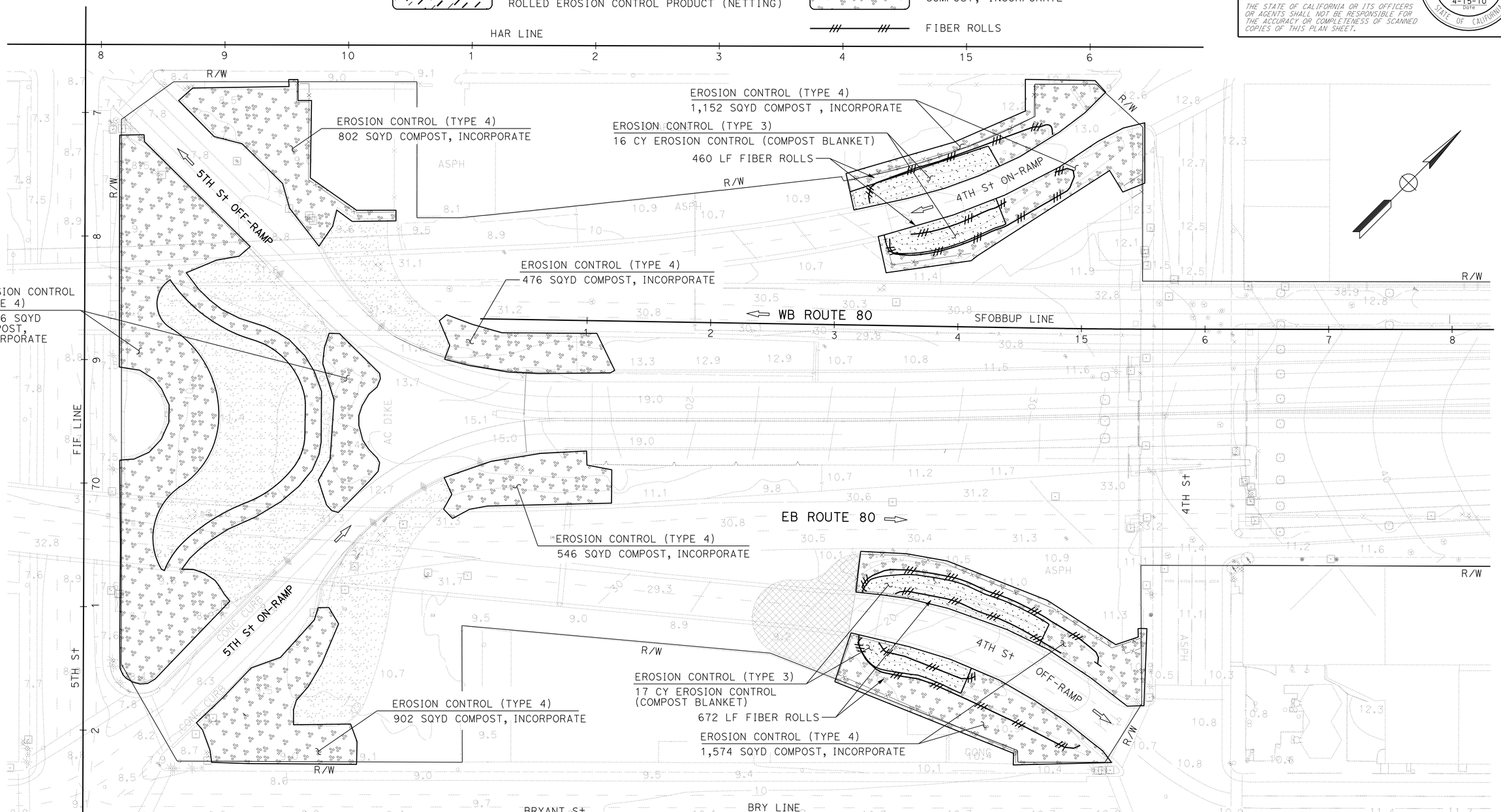

EROSION CONTROL PLAN

SCALE: 1" = 40'

EC-1

THIS PLAN ACCURATE FOR EROSION CONTROL WORK ONLY

REVISED BY	AM
DATE REVISED	4/15/10
CALCULATED-DESIGNED BY	ALEX MCDONALD
CHECKED BY	JENNIFER EGAWA
SENIOR LANDSCAPE ARCHITECT	DAVID W. YAM

STATE OF CALIFORNIA - DEPARTMENT OF TRANSPORTATION
Caltrans
WATER QUALITY

LAST REVISION 06-12-10 | DATE PLOTTED => 28-JUN-2010 | TIME PLOTTED => 08:56

Dist	COUNTY	ROUTE	POST MILES TOTAL PROJECT	SHEET No.	TOTAL SHEETS
04	SF	80	4.9/5.9	26	127

Alex McDonald
LICENSED LANDSCAPE ARCHITECT

6-21-10
PLANS APPROVAL DATE

LICENSED LANDSCAPE ARCHITECT
ALEXANDER K. I. MCDONALD No. 5342
Alex McDonald
Signature
08-31-10
Renewal Date
4-15-10
Date
STATE OF CALIFORNIA

THE STATE OF CALIFORNIA OR ITS OFFICERS OR AGENTS SHALL NOT BE RESPONSIBLE FOR THE ACCURACY OR COMPLETENESS OF SCANNED COPIES OF THIS PLAN SHEET.

NOTE:

FOR ACCURATE RIGHT OF WAY AND ACCESS DATA,
CONTACT RIGHT OF WAY ENGINEERING AT THE DISTRICT OFFICE.

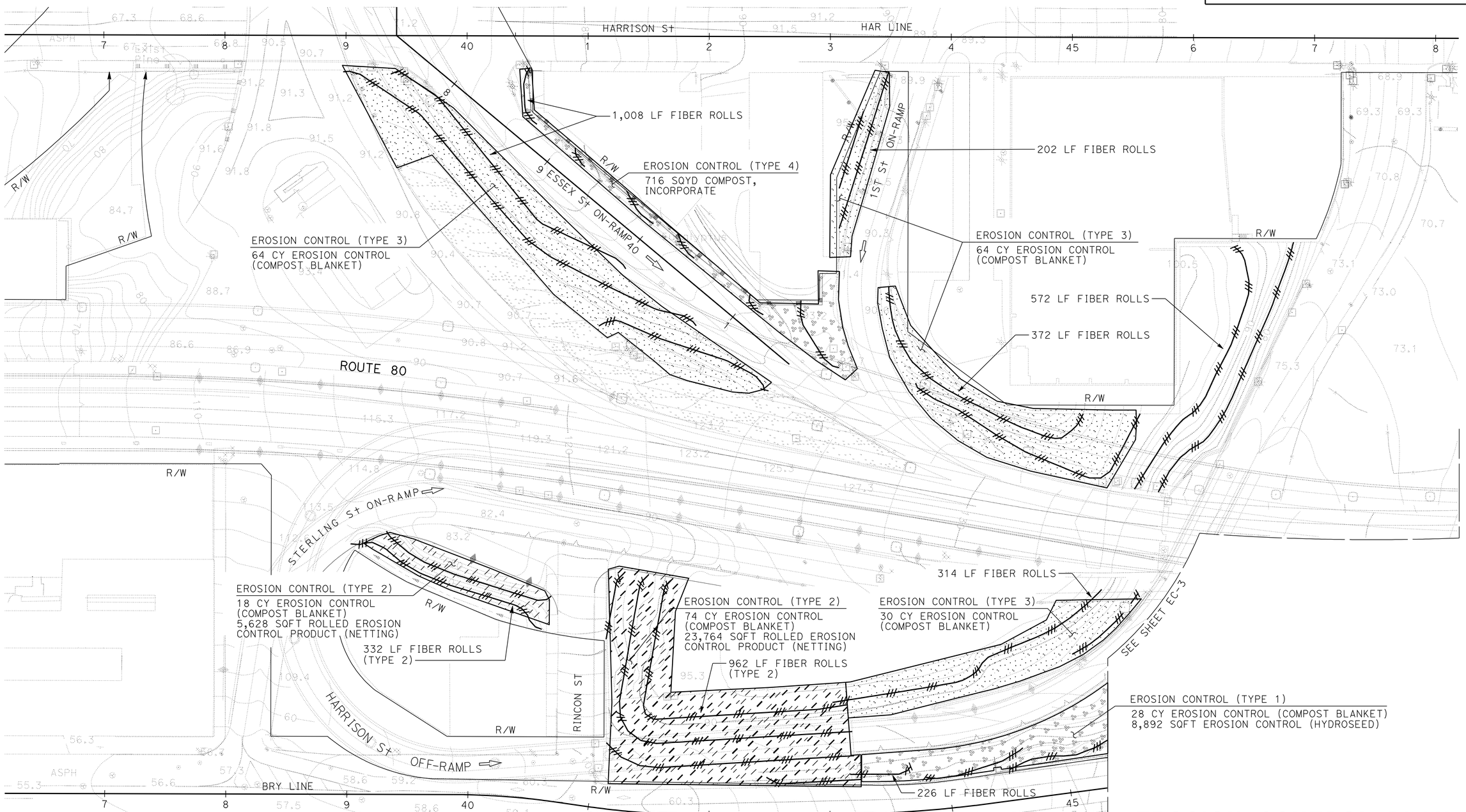

EROSION CONTROL PLAN

SCALE: 1" = 40'

EC-2

THIS PLAN ACCURATE FOR EROSION CONTROL WORK ONLY

STATE OF CALIFORNIA - DEPARTMENT OF TRANSPORTATION
Caltrans® WATER QUALITY

SENIOR LANDSCAPE ARCHITECT: DAVID W. YAM
CALCULATED-DESIGNED BY: ALEX MCDONALD
CHECKED BY: JENNIFER EGAWA
REVISED BY: AM
DATE REVISED: 4/15/10

LAST REVISION: 06-12-10
DATE PLOTTED => 28-JUN-2010
TIME PLOTTED => 09:11

Dist	COUNTY	ROUTE	POST MILES TOTAL PROJECT	SHEET No.	TOTAL SHEETS
04	SF	80	4.9/5.9	27	127

Alex McDonald
LICENSED LANDSCAPE ARCHITECT

6-21-10
PLANS APPROVAL DATE

LICENSED LANDSCAPE ARCHITECT
ALEXANDER K. MCDONALD No. 5342
Alex McDonald
Signature
08-31-10
Renewal Date
4-15-10
Date
STATE OF CALIFORNIA

THE STATE OF CALIFORNIA OR ITS OFFICERS OR AGENTS SHALL NOT BE RESPONSIBLE FOR THE ACCURACY OR COMPLETENESS OF SCANNED COPIES OF THIS PLAN SHEET.

NOTE:

FOR ACCURATE RIGHT OF WAY AND ACCESS DATA,
CONTACT RIGHT OF WAY ENGINEERING AT THE DISTRICT OFFICE.

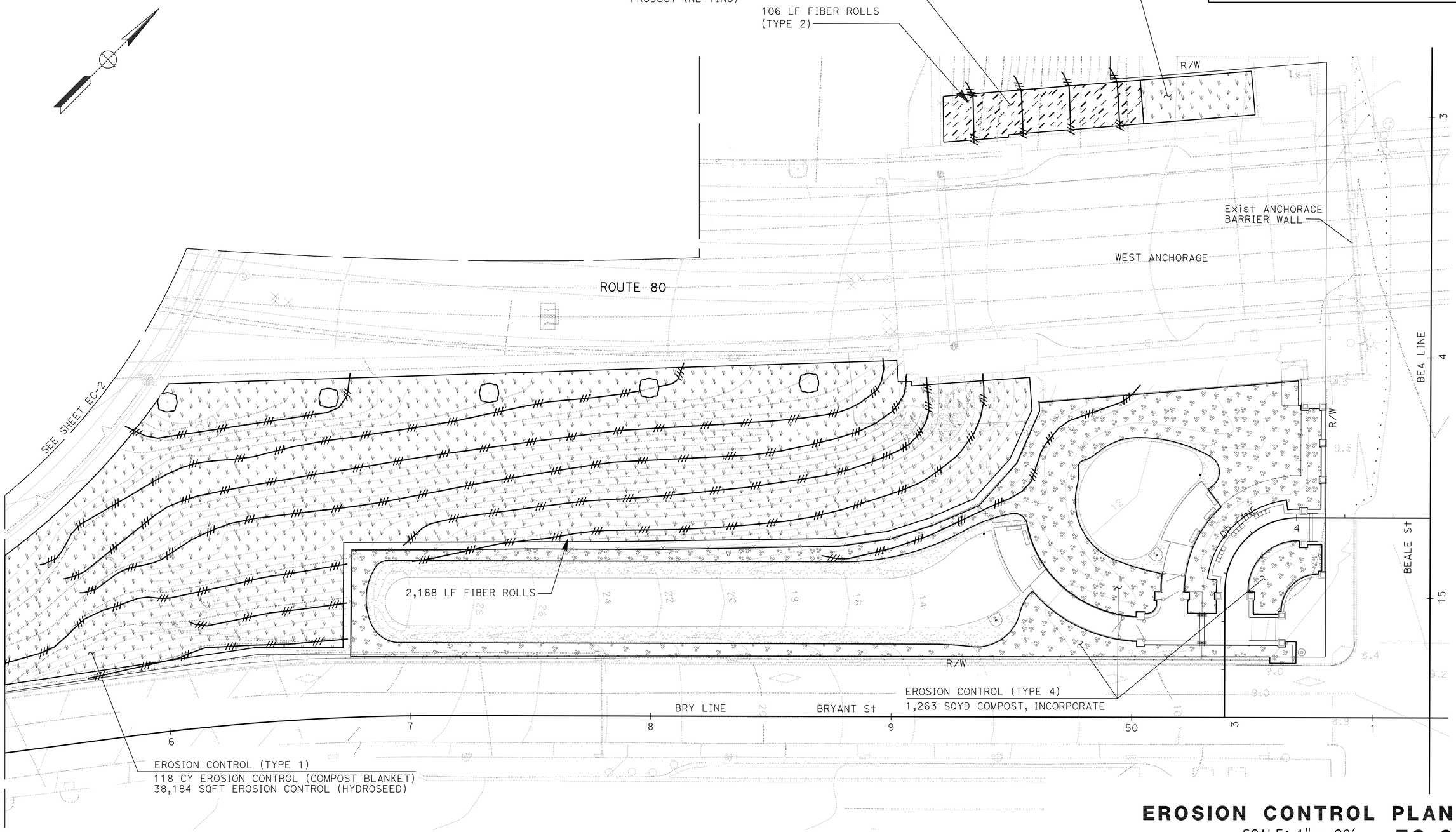

EROSION CONTROL PLAN

SCALE: 1" = 20'

EC-3

THIS PLAN ACCURATE FOR EROSION CONTROL WORK ONLY

STATE OF CALIFORNIA - DEPARTMENT OF TRANSPORTATION
Caltrans®
WATER QUALITY

SENIOR LANDSCAPE ARCHITECT: DAVID W. YAM

CALCULATED-DESIGNED BY: ALEX MCDONALD
CHECKED BY: JENNIFER EGAWA

REVISED BY: AM
DATE REVISED: 4/15/10

LAST REVISION: DATE PLOTTED => 28-JUN-2010
06-12-10 TIME PLOTTED => 09:00

BORDER LAST REVISED 4/11/2008

RELATIVE BORDER SCALE IS IN INCHES 0 1 2 3

USERNAME => trstrk
DGN FILE => 40435ege003.dgn

CU 04343

EA 0435E1

Dist	COUNTY	ROUTE	POST MILES TOTAL PROJECT	SHEET No.	TOTAL SHEETS
04	SF	80	4.9/5.9	28	127

Alex McDonald
LICENSED LANDSCAPE ARCHITECT

6-21-10
PLANS APPROVAL DATE

LICENSED LANDSCAPE ARCHITECT
ALEXANDER K. MCDONALD No. 5292
Signature
08-31-10
Renewal Date
4-15-10
Date
STATE OF CALIFORNIA

THE STATE OF CALIFORNIA OR ITS OFFICERS OR AGENTS SHALL NOT BE RESPONSIBLE FOR THE ACCURACY OR COMPLETENESS OF SCANNED COPIES OF THIS PLAN SHEET.

EROSION CONTROL QUANTITIES

SHEET No.	LOCATION	EROSION CONTROL (TYPE 1)		EROSION CONTROL (TYPE 2)		EROSION CONTROL (TYPE 3)	EROSION CONTROL (TYPE 4)	
		EROSION CONTROL (COMPOST BLANKET)	EROSION CONTROL (HYDROSEED)	EROSION CONTROL (COMPOST BLANKET)	ROLLED EROSION CONTROL PRODUCT (NETTING)	EROSION CONTROL (COMPOST BLANKET)	COMPOST, INCORPORATE	FIBER ROLLS
		CY	SQFT	CY	SQFT	CY	SQYD	LF
EC-1	5TH St	-	-	-	-	-	3,566	-
EC-1	5TH St ON-RAMP	-	-	-	-	-	1,448	-
EC-1	5TH St OFF-RAMP	-	-	-	-	-	1,278	-
EC-1	4TH St ON-RAMP	-	-	-	-	16	1,152	460
EC-1	4TH St OFF-RAMP	-	-	-	-	17	1,574	672
EC-2	NORTH OF ROUTE 80	-	-	-	-	128	716	2,154
EC-2	SOUTH OF ROUTE 80	28	8,892	92	29,392	30	-	1,834
EC-3	BRYANT St	118	38,184	-	-	-	1,263	2,188
EC-3	BEALE St	3	870	6	1,838	-	-	106
	TOTAL	149	47,946	98	31,230	191	10,997	7,414

EROSION CONTROL QUANTITIES
ECQ-1

STATE OF CALIFORNIA - DEPARTMENT OF TRANSPORTATION
Caltrans®
WATER QUALITY

SENIOR LANDSCAPE ARCHITECT: DAVID W. YAM

CALCULATED-DESIGNED BY: ALEX MCDONALD
CHECKED BY: JENNIFER EGAWA

REVISED BY: AM
DATE REVISED: 4/15/10

LAST REVISION
DATE PLOTTED => 25-JUN-2010
TIME PLOTTED => 17:03
06-12-10

Dist	COUNTY	ROUTE	POST MILES TOTAL PROJECT	SHEET No.	TOTAL SHEETS
04	SF	80	4.9/5.9	29	127

LICENSED LANDSCAPE ARCHITECT

6-21-10
PLANS APPROVAL DATE

LICENSED LANDSCAPE ARCHITECT
KIMBERLY WHITE No. 4843
Signature
2-28-12
Renewal Date
4-15-10
Date
STATE OF CALIFORNIA

THE STATE OF CALIFORNIA OR ITS OFFICERS OR AGENTS SHALL NOT BE RESPONSIBLE FOR THE ACCURACY OR COMPLETENESS OF SCANNED COPIES OF THIS PLAN SHEET.

NOTES:

1. FOR ACCURATE RIGHT OF WAY AND ACCESS DATA, CONTACT RIGHT OF WAY ENGINEERING AT THE DISTRICT OFFICE.
2. FOR ROADWAY EXCAVATION DETAILS, SEE SHEET C-20.

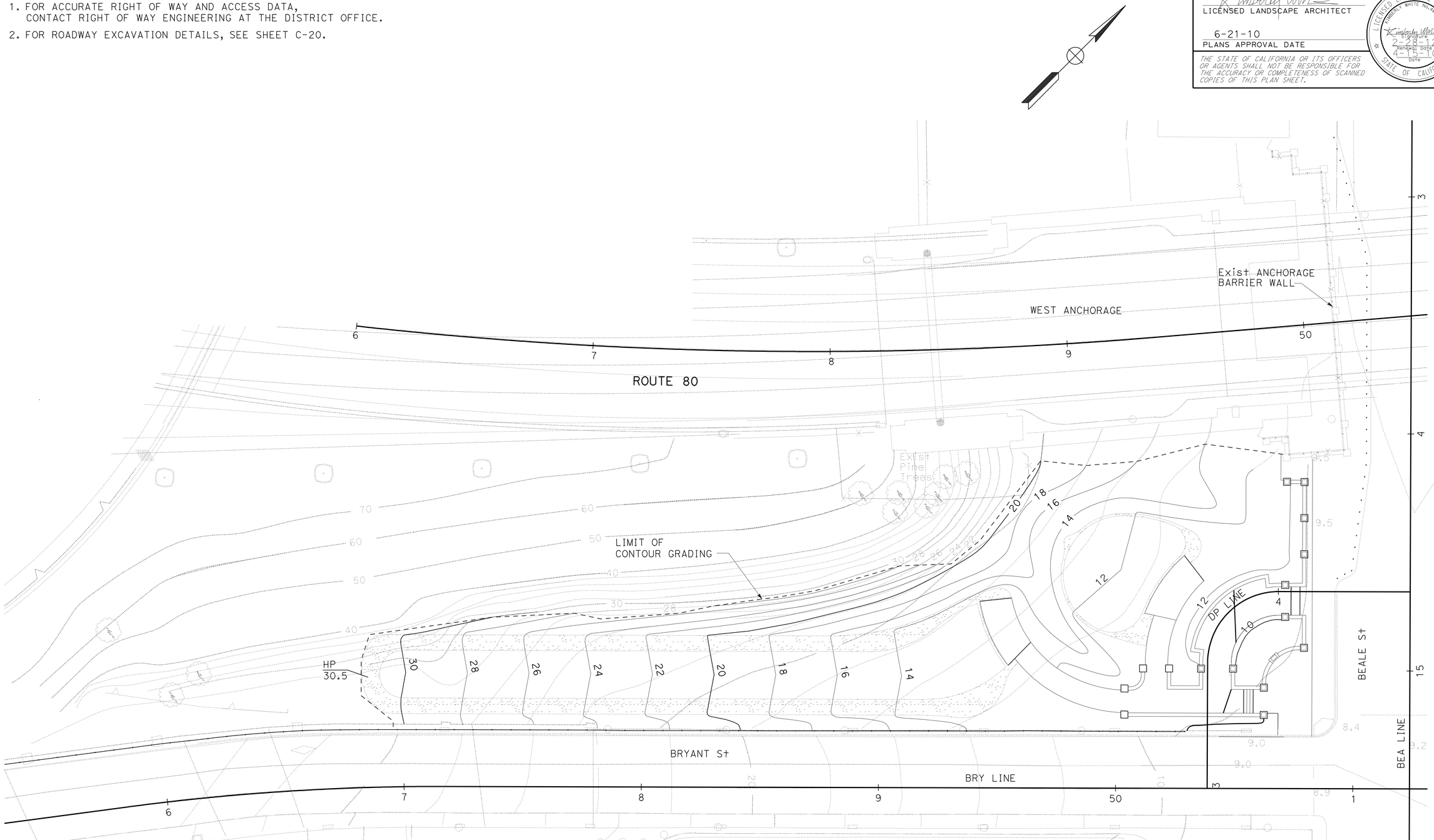

CONTOUR GRADING

SCALE: 1" = 20′ **G-1**

THIS PLAN ACCURATE FOR CONTOUR GRADING WORK ONLY

STATE OF CALIFORNIA - DEPARTMENT OF TRANSPORTATION
Caltrans® LANDSCAPE ARCHITECTURE

SENIOR LANDSCAPE ARCHITECT: LORENA WONG
CALCULATED-DESIGNED BY: KIMBERLY WHITE
CHECKED BY: CHRIS ELSE
REVISED BY: KW
DATE REVISED: 4/15/10

LAST REVISION 06-12-10 | DATE PLOTTED => 25-JUN-2010 | TIME PLOTTED => 17:00

Dist	COUNTY	ROUTE	POST MILES TOTAL PROJECT	SHEET No.	TOTAL SHEETS
04	SF	80	4.9/5.9	30	127

REGISTERED CIVIL ENGINEER 4-15-10 DATE

6-21-10
PLANS APPROVAL DATE

REGISTERED PROFESSIONAL ENGINEER Nien Trinh No. 67739 Exp. 6-30-11 CIVIL STATE OF CALIFORNIA

THE STATE OF CALIFORNIA OR ITS OFFICERS OR AGENTS SHALL NOT BE RESPONSIBLE FOR THE ACCURACY OR COMPLETENESS OF SCANNED COPIES OF THIS PLAN SHEET.

NOTES:

1. FOR WEEPHOLE DETAIL AT RETAINING WALL ALONG BEALE St, SEE RETAINING WALL (B) ON SHEET R-5.
2. FOR WEEPHOLE DETAIL AT RETAINING WALL, SEE RETAINING WALL (A) ON SHEET R-5.

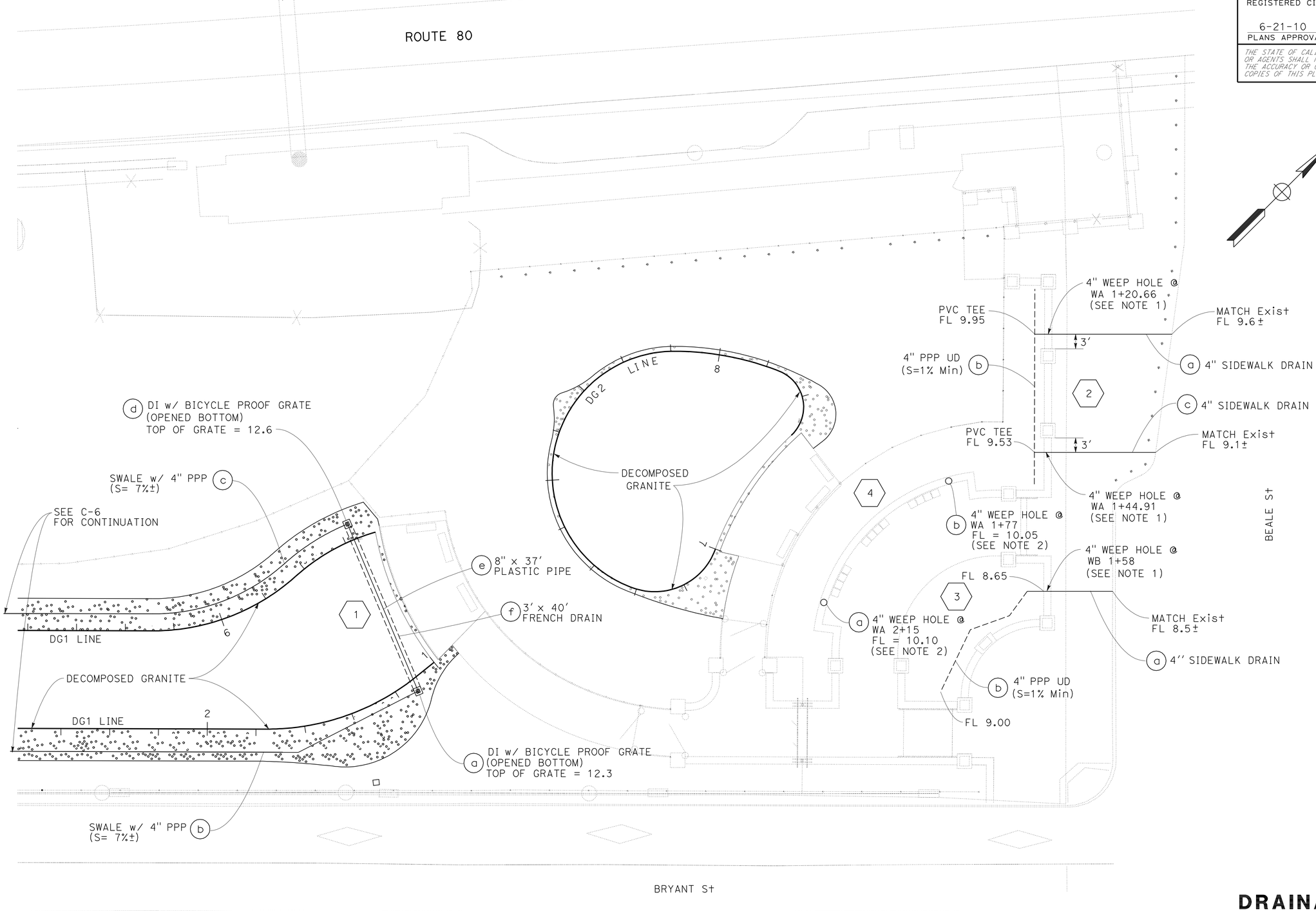

DRAINAGE PLAN

SCALE: 1" = 10'

D-1

REVISED BY	DATE REVISED
NT	4/6/10

NIEN TRINH — CALCULATED-DESIGNED BY
MICHAEL T. NGUYEN — CHECKED BY
MICHAEL T. NGUYEN — FUNCTIONAL SUPERVISOR

STATE OF CALIFORNIA - DEPARTMENT OF TRANSPORTATION
Caltrans
DESIGN

LAST REVISION 06-08-10 | DATE PLOTTED => 25-JUN-2010 | TIME PLOTTED => 17:00

Dist	COUNTY	ROUTE	POST MILES TOTAL PROJECT	SHEET No.	TOTAL SHEETS
04	SF	80	4.9/5.9	31	127

Joseph E. Peterson 4-15-10
REGISTERED CIVIL ENGINEER DATE

6-21-10
PLANS APPROVAL DATE

REGISTERED PROFESSIONAL ENGINEER Joseph E. Peterson No. 42777 Exp. 3-31-12 CIVIL STATE OF CALIFORNIA

THE STATE OF CALIFORNIA OR ITS OFFICERS OR AGENTS SHALL NOT BE RESPONSIBLE FOR THE ACCURACY OR COMPLETENESS OF SCANNED COPIES OF THIS PLAN SHEET.

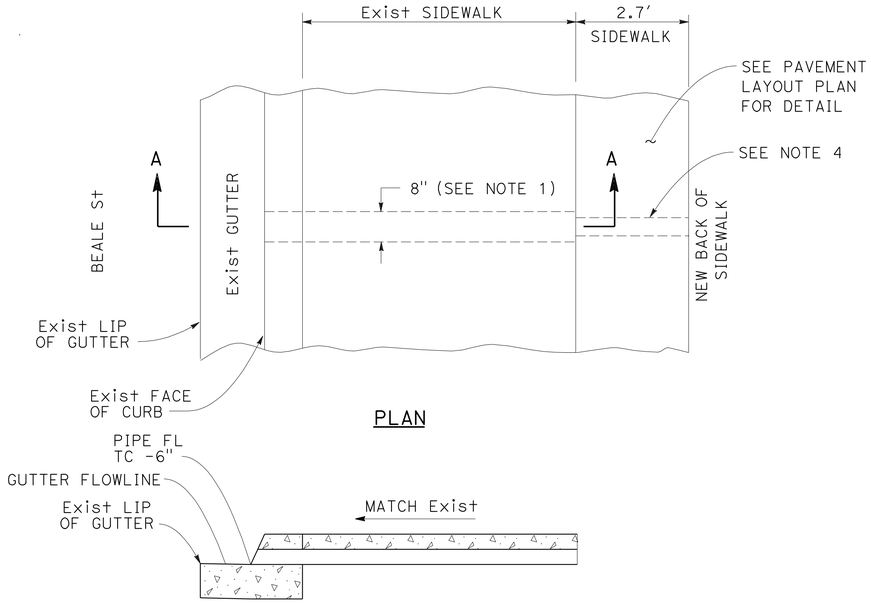

PLAN

SECTION A-A

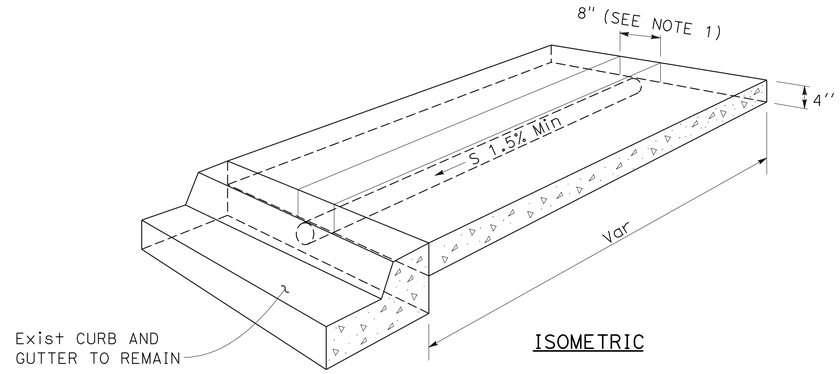

ISOMETRIC

NOTES:

1. SAWCUT AND REMOVE 8" WIDTH OF Exist PCC SIDEWALK FOR PLASTIC PIPE INSTALLATION.
2. PLASTIC PIPE SHALL BE INSTALLED SO THAT TOP OF PIPE IS 2" Min BELOW FINISH GRADE AT BACK OF SIDEWALK, BACKFILL WITH PCC.
3. SIDEWALK DRAIN TO BE A 4" PLASTIC PIPE.
4. 4" PLASTIC PIPE TO CONNECT TO RETAINING WALL, SEE DETAIL (RETAINING WALL B ON SHEET R-5).

SIDEWALK DRAIN

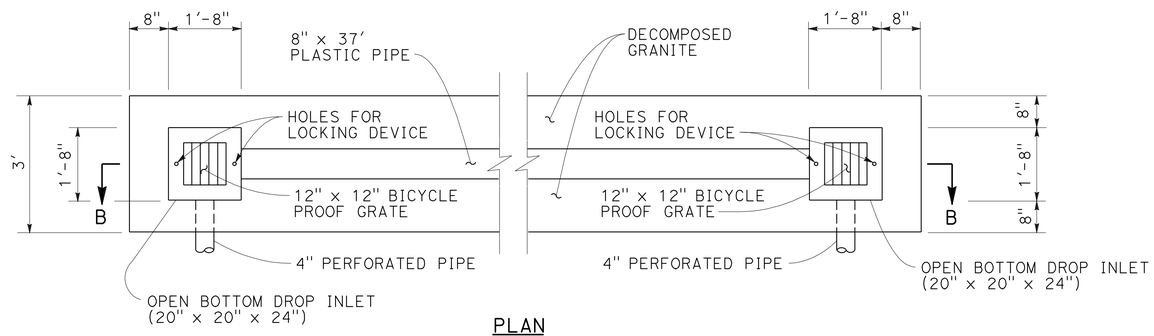

PLAN

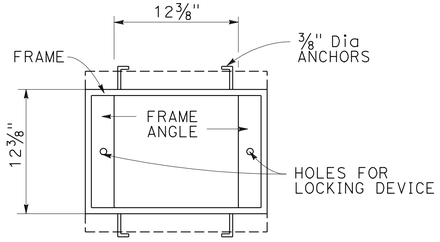

FRAME PLAN

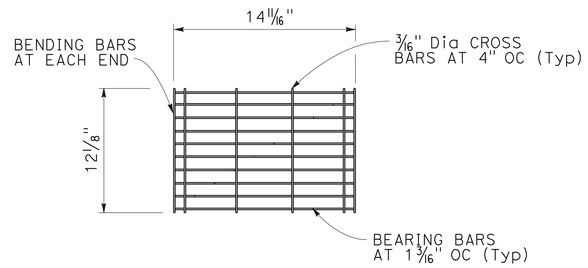

GRATE PLAN

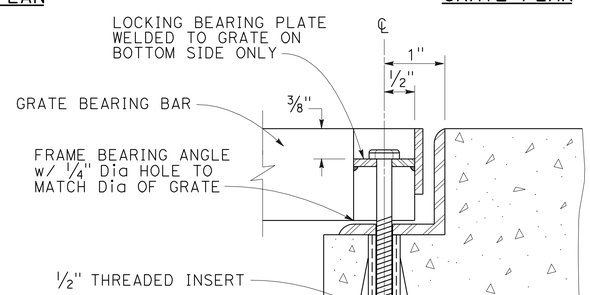

OPTIONAL SECTION AT LOCKING DEVICE

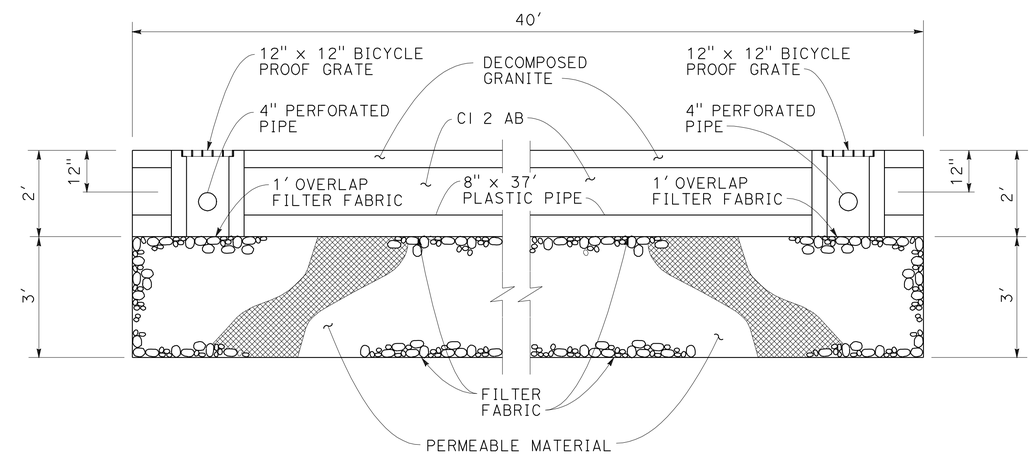

SECTION B-B

FRENCH DRAIN

NOTE:

FRAMES AND GRATES ARE HOT-DIPPED GALVANIZED AFTER FABRICATION PER ASTM SPECIFICATION A-123.

DRAINAGE DETAILS

NO SCALE

DD-1

REVISED BY	DATE REVISED
DL	4/6/10

CALCULATED-DESIGNED BY: DIXON LAU
CHECKED BY: JOSEPH E. PETERSON
FUNCTIONAL SUPERVISOR: NITA LOGAN

STATE OF CALIFORNIA - DEPARTMENT OF TRANSPORTATION
Caltrans
HYDRAULICS

LAST REVISION 04-14-10 | DATE PLOTTED => 25-JUN-2010 | TIME PLOTTED => 17:00

Dist	COUNTY	ROUTE	POST MILES TOTAL PROJECT	SHEET No.	TOTAL SHEETS
04	SF	80	4.9/5.9	32	127

Joseph E. Peterson 4-15-10
REGISTERED CIVIL ENGINEER DATE

6-21-10
PLANS APPROVAL DATE

REGISTERED PROFESSIONAL ENGINEER Joseph E. Peterson No. 42777 Exp. 3-31-12 CIVIL STATE OF CALIFORNIA

THE STATE OF CALIFORNIA OR ITS OFFICERS OR AGENTS SHALL NOT BE RESPONSIBLE FOR THE ACCURACY OR COMPLETENESS OF SCANNED COPIES OF THIS PLAN SHEET.

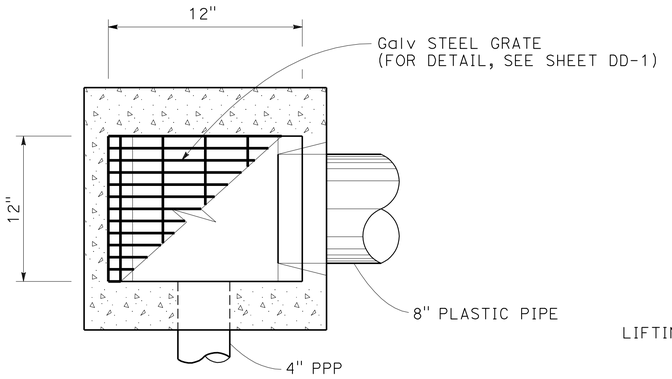

PLAN

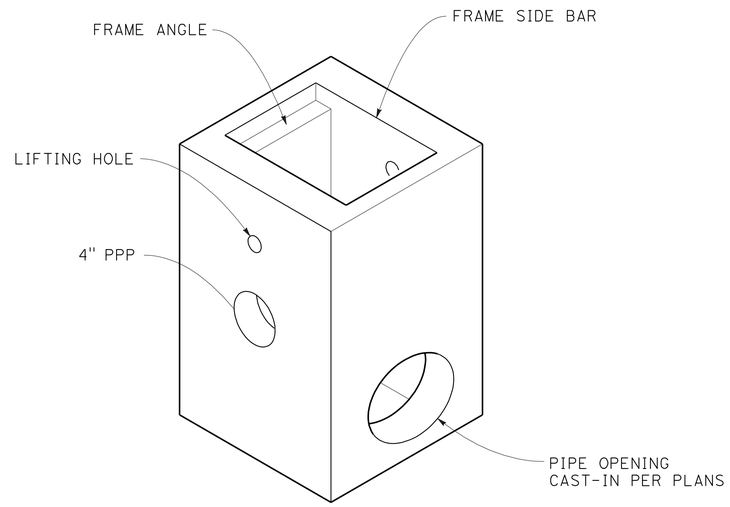

ISOMETRIC

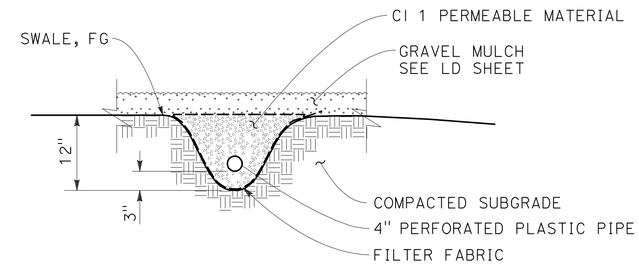

SECTION

SWALE WITH PERFORATED PIPE

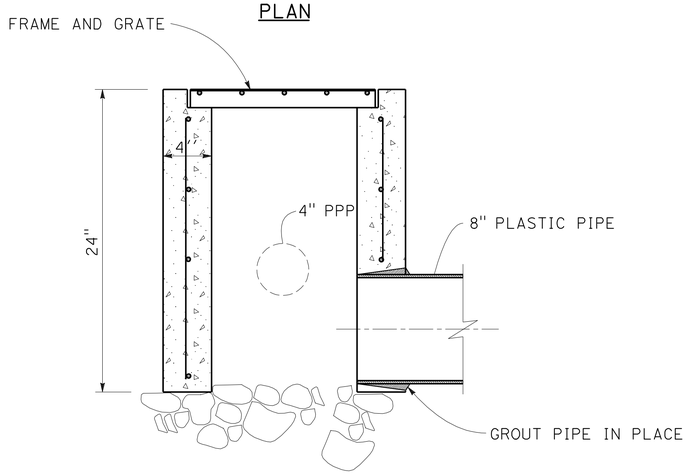

TYPICAL SECTION

DROP INLET

DRAINAGE DETAILS

NO SCALE

DD-2

DIXON LAU	REVISED BY
JOSEPH E. PETERSON	DATE REVISED
DL	
4/6/10	
CALCULATED-DESIGNED BY	
CHECKED BY	
FUNCTIONAL SUPERVISOR	
NITA LOGAN	

STATE OF CALIFORNIA - DEPARTMENT OF TRANSPORTATION
Caltrans
HYDRAULICS

LAST REVISION 04-13-10 | DATE PLOTTED => 25-JUN-2010 | TIME PLOTTED => 17:00

Dist	COUNTY	ROUTE	POST MILES TOTAL PROJECT	SHEET No.	TOTAL SHEETS
04	SF	80	4.9/5.9	33	127

N. Trinh 4-15-10
REGISTERED CIVIL ENGINEER DATE

6-21-10
PLANS APPROVAL DATE

REGISTERED PROFESSIONAL ENGINEER Nien Trinh No. 67739 Exp. 6-30-11 CIVIL STATE OF CALIFORNIA

THE STATE OF CALIFORNIA OR ITS OFFICERS OR AGENTS SHALL NOT BE RESPONSIBLE FOR THE ACCURACY OR COMPLETENESS OF SCANNED COPIES OF THIS PLAN SHEET.

DRAINAGE QUANTITIES

DRAINAGE SYSTEM No. ⬡	DRAINAGE UNIT ◯	CI 1 PERMEABLE MATERIAL (CY)	FILTER FABRIC (SQYD)	CI 2 AB (CY)	DROP INLET (N) (20" x 20" x 24") (EA)	12" x 12" BICYCLE PROOF GRATE AND FRAME (N) (EA)	HEIGHT OF INLET (N) (FT)	MINOR CONCRETE MINOR STRUCTURE (CY)	BAR REINFORCING STEEL (LB)	MISCELLANEOUS IRON AND STEEL (LB)	8" PLASTIC PIPE (LF)	4" PLASTIC PIPE (LF)	4" PERFORATED PLASTIC PIPE UNDERDRAIN (LF)	4" TERMINAL RISER (N) (EA)	REMOVE CONCRETE CURB (CY)	REMOVE CONCRETE SIDEWALK (CY)	DESCRIPTION	STATION	DRAINAGE PLAN SHEET No.	DRAINAGE SYSTEM No. ⬡	DRAINAGE UNIT ◯
1	a				1	1	2.0	0.15		28							DROP INLET w/ BICYCLE PROOF GRATE	3' Lt DG1 1+6	D-1	1	a
	b	9.5	136										266	1			SWALE w/ 4" PPP & TERMINAL RISER	3' Lt DG1 1+6 TO 3+71			b
	c	9.5	134										261	1			SWALE w/ 4" PPP & TERMINAL RISER	3' Lt DG1 3+73 TO 6+34			c
	d				1	1	2.0	0.15		28							DROP INLET w/ BICYCLE PROOF GRATE	3' Lt DG1 6+34			d
	e			6.7							37						8" PLASTIC PIPE	3' Lt DG1 1+6 TO 6+34			e
	f	13.4	55.6														FRENCH DRAIN	3' Lt DG1 1+6 TO 6+34			f
2	a							0.27				27.2			0.02	0.34	SIDEWALK DRAIN	24.5' Lt WA 1+20.66 TO 2.67' Rt WA 1+20.66	D-1	2	a
	b	16											39				4" PPP UD	2.67' Rt WA 1+13.16 TO 1+52.16			b
	c							0.25				24			0.02	0.30	SIDEWALK DRAIN	21.3' Lt WA 1+44.91 TO 2.67' Rt WA 1+44.91			c
3	a							0.15				13.6			0.02	0.17	SIDEWALK DRAIN	1' Lt WB 1+58 TO 12.6' Rt WB 1+58	D-1	3	a
	b	6.4											30				4" PPP UD	3.49' Lt WB 1+17.91 TO 1' Lt WB 1+58			b
4	a	0.1	2.1									1					4" WEEP HOLE	WA 2+15	D-1	4	a
	b	0.1	2.1									1					4" WEEP HOLE	WA 1+77			b
SHEET TOTAL		55	329.8	6.7	2	2		0.97		56	37	66.8	596	2	0.87		SHEET TOTAL				

(N) NOT A SEPARATE PAY ITEM. FOR INFORMATION ONLY

DRAINAGE QUANTITIES DQ-1

STATE OF CALIFORNIA - DEPARTMENT OF TRANSPORTATION
Caltrans DESIGN

NIEN TRINH — CALCULATED-DESIGNED BY
MICHAEL T. NGUYEN — CHECKED BY
REVISED BY: NT — DATE REVISED: 4/6/10
FUNCTIONAL SUPERVISOR: MICHAEL T. NGUYEN

LAST REVISION 04-14-10 — DATE PLOTTED => 25-JUN-2010 — TIME PLOTTED => 17:00

Dist	COUNTY	ROUTE	POST MILES TOTAL PROJECT	SHEET No.	TOTAL SHEETS
04	SF	80	4.9/5.9	34	127

N. Trinh 4-15-10
REGISTERED CIVIL ENGINEER DATE

6-21-10
PLANS APPROVAL DATE

REGISTERED PROFESSIONAL ENGINEER
Nien Trinh
No. 67739
Exp. 6-30-11
CIVIL
STATE OF CALIFORNIA

THE STATE OF CALIFORNIA OR ITS OFFICERS OR AGENTS SHALL NOT BE RESPONSIBLE FOR THE ACCURACY OR COMPLETENESS OF SCANNED COPIES OF THIS PLAN SHEET.

LEGEND:

DESCRIPTION	EXISTING UTILITIES	OWNERSHIP
WATER	—w— — — —w—	SAN FRANCISCO WATER DEPARTMENT
FIRE WATER	—fw— — — —fw—	SAN FRANCISCO FIRE DEPARTMENT BUREAU OF ENGINEERING AND WATER SUPPLY
IRRIGATION SYSTEM	—is— — — —is—	CALTRANS
UNDERGROUND ELECTRIC SYSTEM -	udt— — — — —udt—	HETCH HETCHY WATER AND POWER
ELECTRIC	—-e— — —-e—	PACIFIC GAS AND ELECTRIC Co (UNLESS OTHERWISE NOTED)
STREET LIGHTING	—sl— — — —sl—	SAN FRANCISCO BUREAU OF LIGHT HEAT AND POWER
TRAFFIC SYSTEM	-ts— - — - —-ts-	SAN FRANCISCO BUREAU OF TRAFFIC ENGINEERING
MUNI OVERHEAD CONTACT SYSTEM	ocs	SAN FRANCISCO MUNICIPAL RAILWAY
TELEPHONE	—--t— — —--t—	AT&T
TELEPHONE	—--t—(mci)—--t—	MCI
FIBER OPTIC LINE	—fo— — — —fo—	VARIOUS
GAS	—-g— - —-g—	PG&E
SEWER	—--s— -- —--s—	SAN FRANCISCO DEPARTMENT OF PUBLIC WORKS
STORM DRAIN	---sd— - —--sd-	CALTRANS
AIR & WATER	----------	CALTRANS

ABBREVIATIONS:

CB	CONTROLLER BOX
CML	COLUMN MOUNTED LIGHTING
CT	CALTRANS
EMH	ELECTRICAL MANHOLE
EPB	ELECTRIC PULL BOX
FH	FIRE HYDRANT
FRFC	FROM FACE OF CURB
GV	GAS VALVE
HP	HIGH PRESSURE
HV	HIGH VOLTAGE
LP	LOW PRESSURE
LV	LOW VOLTAGE
OCS	OVERHEAD CONTACT SYSTEM
OH	OVERHEAD
SFWD	SAN FRANCISCO WATER DEPARTMENT
SLP	STREET LIGHTING PULL BOX
TMH	TELEPHONE MANHOLE
TOS	CALTRANS TRAFFIC OPERATIONS SYSTEM
TPB	TELEPHONE PULL BOX
TS	TRAFFIC SIGNAL
TSP	TRAFFIC SYSTEM PULL BOX
UV	UTILITY VAULT
WFP	WATER BACK FLOW PROTECTOR
WP	WOOD POLE
WV	WATER VALVE

NOTES:

1. ALL UTILITIES SHOWN ARE EXISTING.
2. ALL UTILITIES SHOWN IN THESE PLANS ARE BASED ON RECORD INFORMATION OBTAINED FROM UTILITY OWNERS, AND/OR FIELD SURVEYS OF EXISTING UTILITY SURFACE FEATURES.
3. LOCATION OF UTILITY FACILITES SHOWN ON THESE PLANS ARE APPROXIMATE AND SHALL BE VERIFIED BY THE CONTRACTOR PRIOR TO CONSTRUCTION. CONTRACTOR SHALL SCHEDULE CONSTRUCTION OPERATIONS SO THAT UTILITIES ARE KEPT IN SERVICE AT ALL TIMES.

DESCRIPTION	SYMBOL
ABANDONED SYSTEM	///
EXISTING COLUMN/FOOTING	
RETROFIT COLUMN/PILE	
SOFFIT LIGHT	
STREET LIGHT	
TRAFFIC SIGNAL	OR
STEEL POLE	
WOOD POLE	WP
GAS VALVE	GV
WATER VALVE	WV
CONTROLLER BOX	
DRAINAGE INLET	
MONITORING WELL	

DESCRIPTION	SYMBOL
SEWER, STORM DRAIN MANHOLE	
ELECTRICAL OR TELEPHONE MANHOLE	EMH TMH
PULL BOX	
UTILITY VAULT	UV
FIRE ALARM CALL BOX	
SAN FRANCISCO WATER BLOW OFF	
FIRE HYDRANT	

UTILITY PLAN
NO SCALE

U-1

LAST REVISION 04-13-10 | DATE PLOTTED => 25-JUN-2010 | TIME PLOTTED => 17:00

STATE OF CALIFORNIA - DEPARTMENT OF TRANSPORTATION
Caltrans DESIGN
FUNCTIONAL SUPERVISOR MICHAEL T. NGUYEN
CALCULATED-DESIGNED BY NIEN TRINH | CHECKED BY MICHAEL T. NGUYEN
REVISED BY NT | DATE REVISED 4/6/10

Dist	COUNTY	ROUTE	POST MILES TOTAL PROJECT	SHEET No.	TOTAL SHEETS
04	SF	80	4.9/5.9	35	127

REGISTERED CIVIL ENGINEER 4-15-10 DATE

6-21-10
PLANS APPROVAL DATE

REGISTERED PROFESSIONAL ENGINEER
Nien Trinh
No. 67739
Exp. 6-30-11
CIVIL
STATE OF CALIFORNIA

THE STATE OF CALIFORNIA OR ITS OFFICERS OR AGENTS SHALL NOT BE RESPONSIBLE FOR THE ACCURACY OR COMPLETENESS OF SCANNED COPIES OF THIS PLAN SHEET.

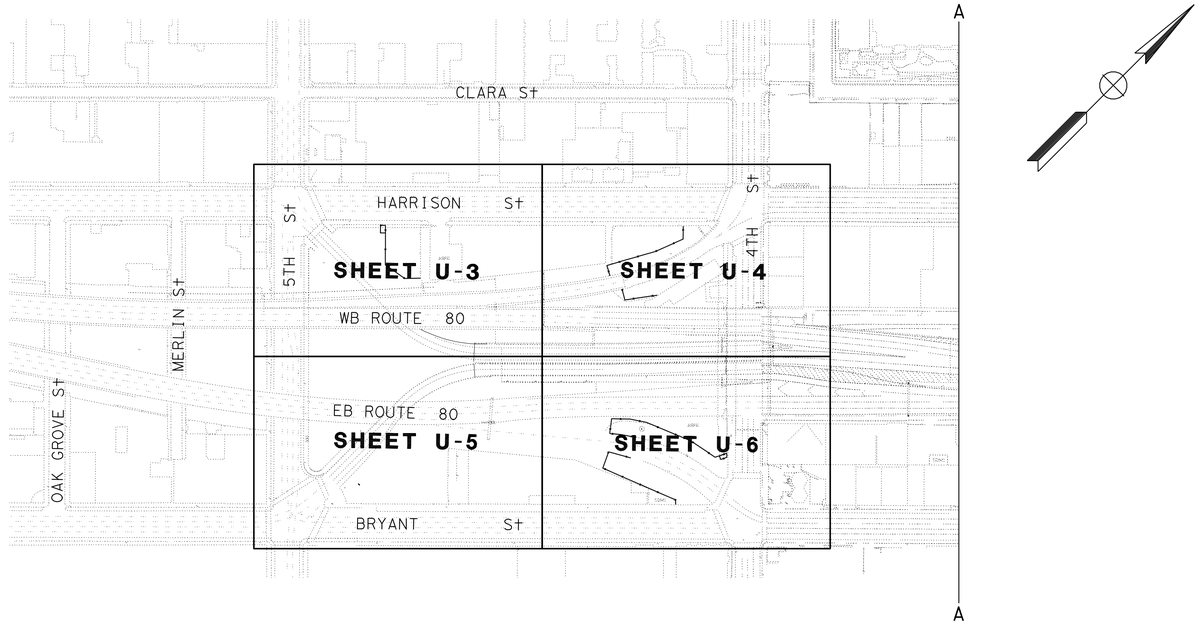

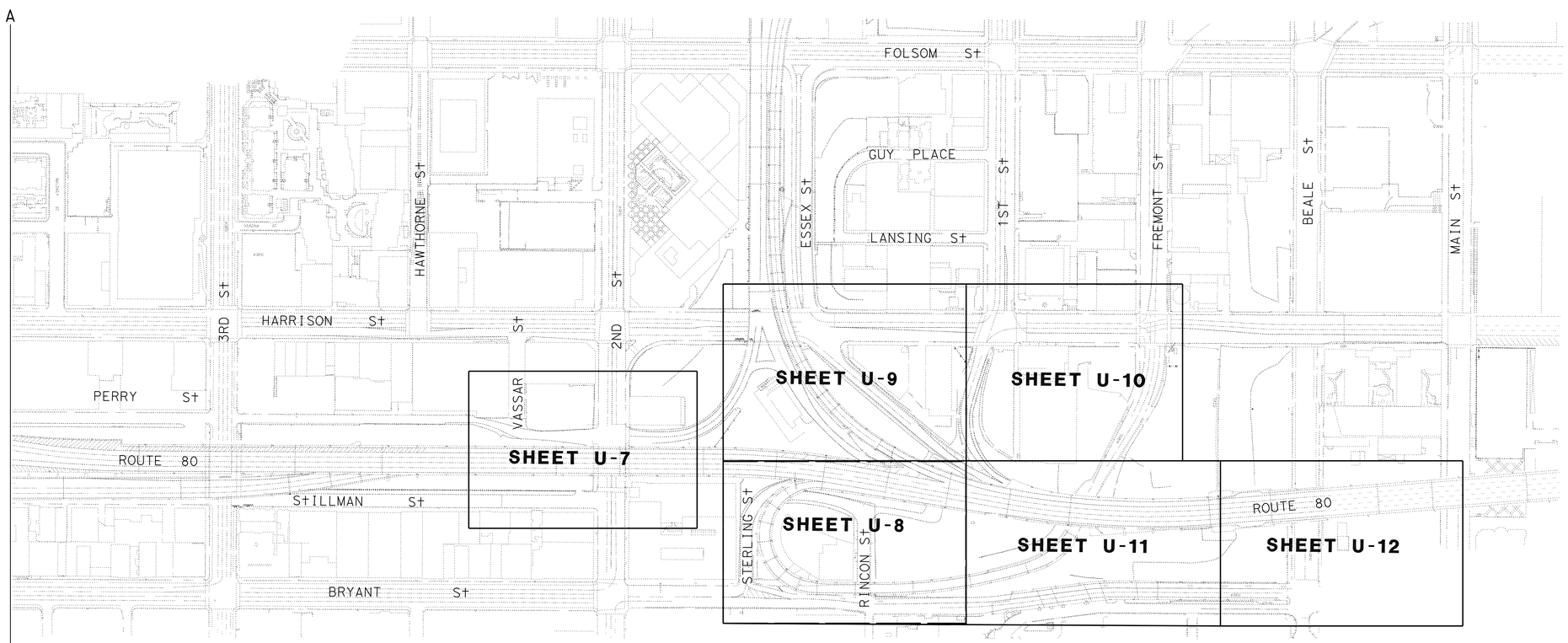

KEY MAP

UTILITY PLAN

SCALE: 1" = 50'

FOR NOTES, ABBREVIATIONS AND LEGEND, SEE SHEET U-1

THIS PLAN ACCURATE FOR UTILITY INFORMATION ONLY

U-2

STATE OF CALIFORNIA - DEPARTMENT OF TRANSPORTATION
Caltrans
DESIGN

FUNCTIONAL SUPERVISOR: MICHAEL T. NGUYEN

CALCULATED-DESIGNED BY: NIEN TRINH
CHECKED BY: MICHAEL T. NGUYEN

REVISED BY: NT
DATE REVISED: 4/6/10

LAST REVISION 04-15-10
DATE PLOTTED => 25-JUN-2010
TIME PLOTTED => 17:00

Dist	COUNTY	ROUTE	POST MILES TOTAL PROJECT	SHEET No.	TOTAL SHEETS
04	SF	80	4.9/5.9	36	127

REGISTERED CIVIL ENGINEER 4-15-10 DATE

6-21-10
PLANS APPROVAL DATE

REGISTERED PROFESSIONAL ENGINEER
Nien Trinh
No. 67739
Exp. 6-30-11
CIVIL
STATE OF CALIFORNIA

THE STATE OF CALIFORNIA OR ITS OFFICERS OR AGENTS SHALL NOT BE RESPONSIBLE FOR THE ACCURACY OR COMPLETENESS OF SCANNED COPIES OF THIS PLAN SHEET.

NOTE:

FOR ACCURATE RIGHT OF WAY AND ACCESS DATA,
CONTACT RIGHT OF WAY ENGINEERING AT THE DISTRICT OFFICE.

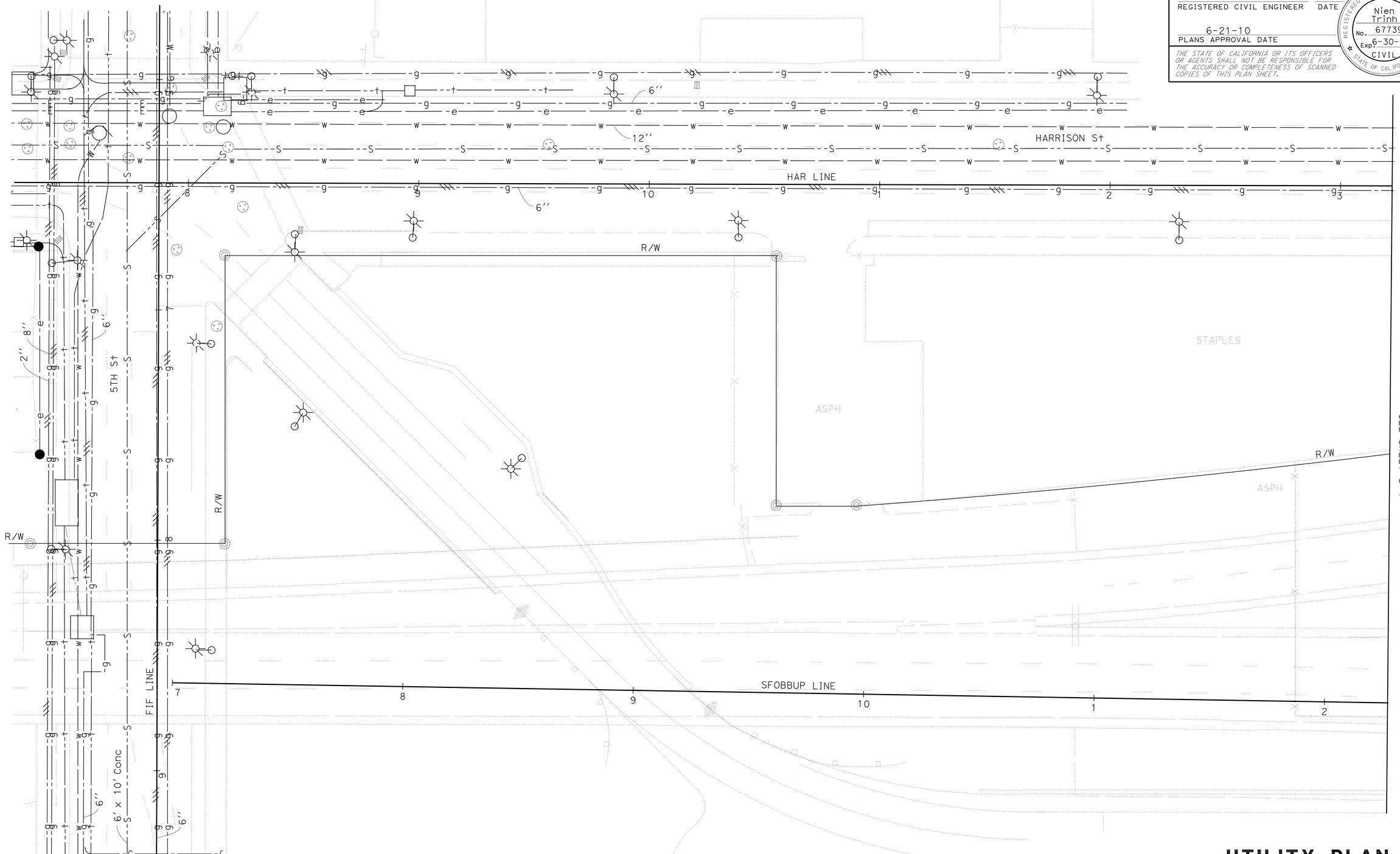

FOR NOTES, ABBREVIATIONS AND LEGEND, SEE SHEET U-1

THIS PLAN ACCURATE FOR UTILITY INFORMATION ONLY

UTILITY PLAN

SCALE: 1" = 20'

U-3

REVISED BY	DATE REVISED
NT	4/6/10

CALCULATED-DESIGNED BY: NIEN TRINH
CHECKED BY: MICHAEL T. NGUYEN
FUNCTIONAL SUPERVISOR: MICHAEL T. NGUYEN

STATE OF CALIFORNIA - DEPARTMENT OF TRANSPORTATION
Caltrans
DESIGN

LAST REVISION 04-17-10
DATE PLOTTED => 28-JUN-2010
TIME PLOTTED => 14:02

Dist	COUNTY	ROUTE	POST MILES TOTAL PROJECT	SHEET No.	TOTAL SHEETS
04	SF	80	4.9/5.9	37	127

N. Trinh 4-15-10
REGISTERED CIVIL ENGINEER DATE

6-21-10
PLANS APPROVAL DATE

REGISTERED PROFESSIONAL ENGINEER Nien Trinh No. 67739 Exp. 6-30-11 CIVIL STATE OF CALIFORNIA

THE STATE OF CALIFORNIA OR ITS OFFICERS OR AGENTS SHALL NOT BE RESPONSIBLE FOR THE ACCURACY OR COMPLETENESS OF SCANNED COPIES OF THIS PLAN SHEET.

NOTE:

FOR ACCURATE RIGHT OF WAY AND ACCESS DATA,
CONTACT RIGHT OF WAY ENGINEERING AT THE DISTRICT OFFICE.

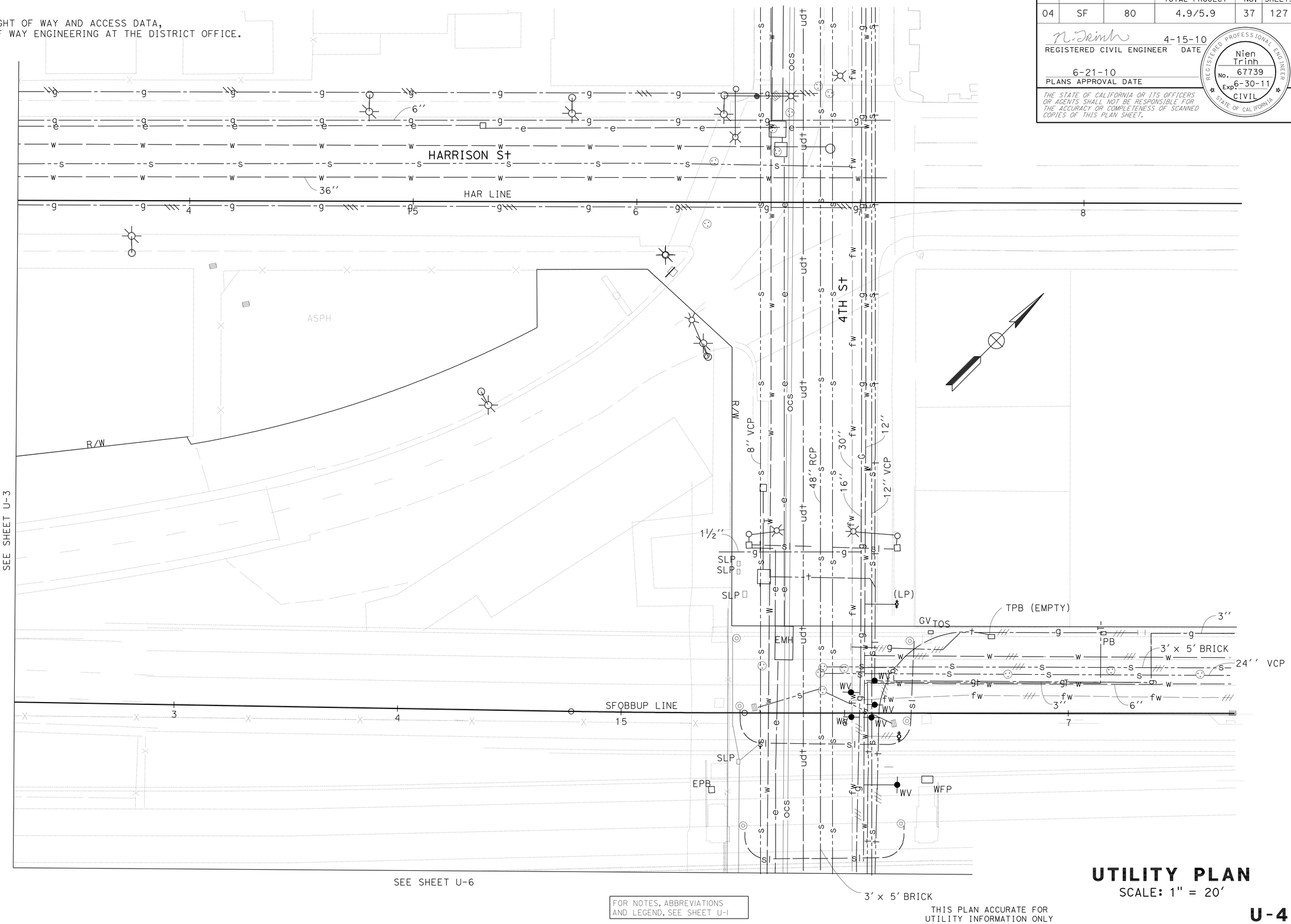

FOR NOTES, ABBREVIATIONS AND LEGEND, SEE SHEET U-1

THIS PLAN ACCURATE FOR UTILITY INFORMATION ONLY

UTILITY PLAN

SCALE: 1" = 20'

U-4

REVISED BY	NT
DATE REVISED	4/6/10
CALCULATED-DESIGNED BY	NIEN TRINH
CHECKED BY	MICHAEL T. NGUYEN
FUNCTIONAL SUPERVISOR	MICHAEL T. NGUYEN

STATE OF CALIFORNIA - DEPARTMENT OF TRANSPORTATION
Caltrans® DESIGN

LAST REVISION 04-17-10
DATE PLOTTED => 28-JUN-2010
TIME PLOTTED => 14:02

Dist	COUNTY	ROUTE	POST MILES TOTAL PROJECT	SHEET No.	TOTAL SHEETS
04	SF	80	4.9/5.9	38	127

N. Trinh 4-15-10
REGISTERED CIVIL ENGINEER DATE

6-21-10
PLANS APPROVAL DATE

REGISTERED PROFESSIONAL ENGINEER
Nien Trinh
No. 67739
Exp. 6-30-11
CIVIL
STATE OF CALIFORNIA

THE STATE OF CALIFORNIA OR ITS OFFICERS OR AGENTS SHALL NOT BE RESPONSIBLE FOR THE ACCURACY OR COMPLETENESS OF SCANNED COPIES OF THIS PLAN SHEET.

NOTE:
FOR ACCURATE RIGHT OF WAY AND ACCESS DATA, CONTACT RIGHT OF WAY ENGINEERING AT THE DISTRICT OFFICE.

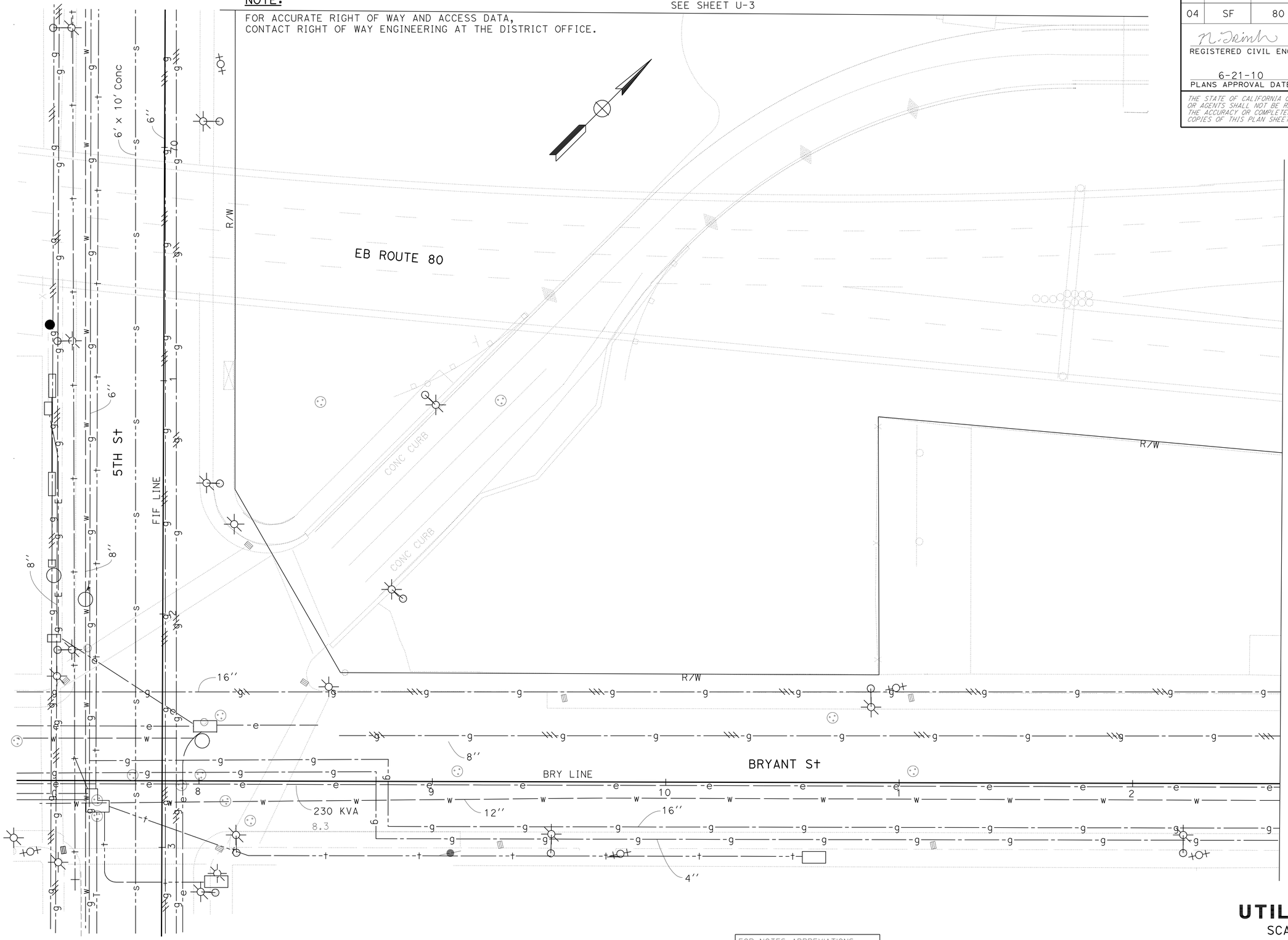

FOR NOTES, ABBREVIATIONS AND LEGEND, SEE SHEET U-1

THIS PLAN ACCURATE FOR UTILITY INFORMATION ONLY

UTILITY PLAN
SCALE: 1" = 20'

U-5

NIEN TRINH	REVISED BY
MICHAEL T. NGUYEN	DATE REVISED
NT	
4/6/10	
CALCULATED-DESIGNED BY	
CHECKED BY	
FUNCTIONAL SUPERVISOR	
MICHAEL T. NGUYEN	

STATE OF CALIFORNIA - DEPARTMENT OF TRANSPORTATION
Caltrans
DESIGN

LAST REVISION 04-17-10
DATE PLOTTED => 28-JUN-2010
TIME PLOTTED => 14:02

Dist	COUNTY	ROUTE	POST MILES TOTAL PROJECT	SHEET No.	TOTAL SHEETS
04	SF	80	4.9/5.9	39	127

REGISTERED CIVIL ENGINEER 4-15-10 DATE

6-21-10
PLANS APPROVAL DATE

REGISTERED PROFESSIONAL ENGINEER Nien Trinh No. 67739 Exp. 6-30-11 CIVIL STATE OF CALIFORNIA

THE STATE OF CALIFORNIA OR ITS OFFICERS OR AGENTS SHALL NOT BE RESPONSIBLE FOR THE ACCURACY OR COMPLETENESS OF SCANNED COPIES OF THIS PLAN SHEET.

NOTE:

FOR ACCURATE RIGHT OF WAY AND ACCESS DATA, CONTACT RIGHT OF WAY ENGINEERING AT THE DISTRICT OFFICE.

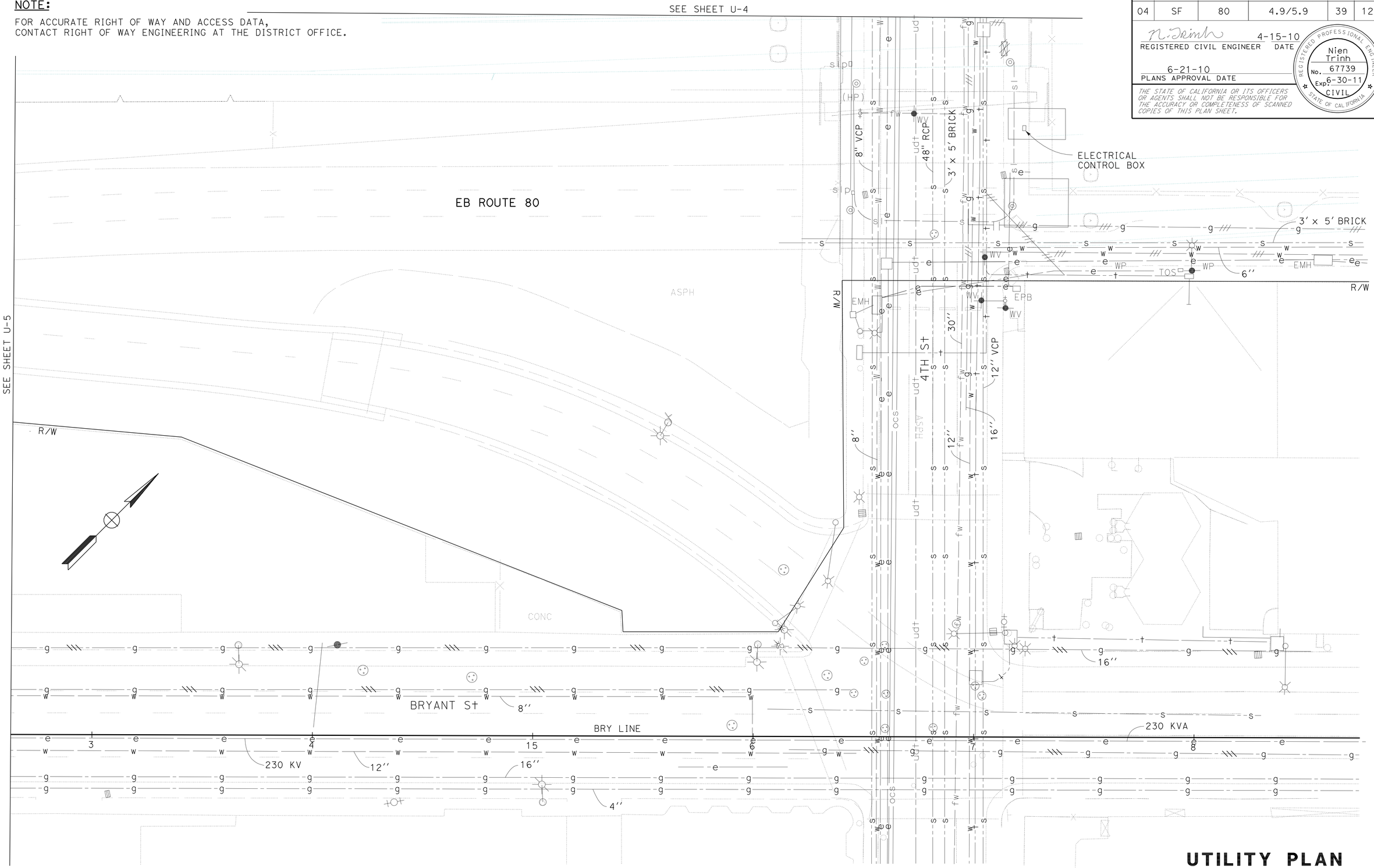

FOR NOTES, ABBREVIATIONS AND LEGEND, SEE SHEET U-1

THIS PLAN ACCURATE FOR UTILITY INFORMATION ONLY

UTILITY PLAN

SCALE: 1" = 20'

U-6

REVISED BY	DATE REVISED
NT	4/6/10

NIEN TRINH — CALCULATED-DESIGNED BY
MICHAEL T. NGUYEN — CHECKED BY
MICHAEL T. NGUYEN — FUNCTIONAL SUPERVISOR

STATE OF CALIFORNIA - DEPARTMENT OF TRANSPORTATION
Caltrans
DESIGN

LAST REVISION 04-17-10 | DATE PLOTTED => 25-JUN-2010 | TIME PLOTTED => 16:58

Dist	COUNTY	ROUTE	POST MILES TOTAL PROJECT	SHEET No.	TOTAL SHEETS
04	SF	80	4.9/5.9	40	127

REGISTERED CIVIL ENGINEER 4-15-10 DATE

6-21-10
PLANS APPROVAL DATE

REGISTERED PROFESSIONAL ENGINEER Nien Trinh No. 67739 Exp. 6-30-11 CIVIL STATE OF CALIFORNIA

THE STATE OF CALIFORNIA OR ITS OFFICERS OR AGENTS SHALL NOT BE RESPONSIBLE FOR THE ACCURACY OR COMPLETENESS OF SCANNED COPIES OF THIS PLAN SHEET.

NOTE:

FOR ACCURATE RIGHT OF WAY AND ACCESS DATA, CONTACT RIGHT OF WAY ENGINEERING AT THE DISTRICT OFFICE.

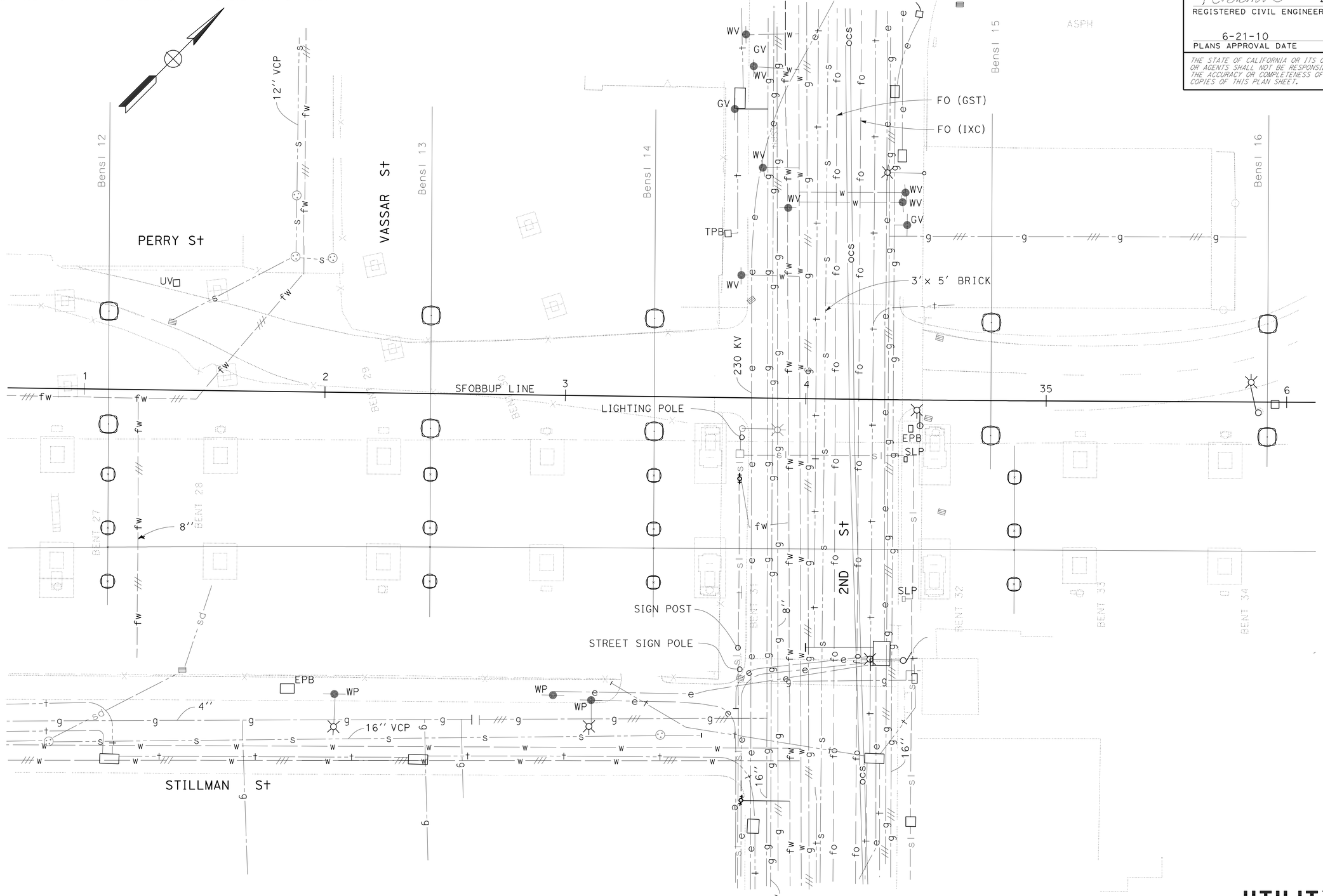

FOR NOTES, ABBREVIATIONS AND LEGEND, SEE SHEET U-1

THIS PLAN ACCURATE FOR UTILITY INFORMATION ONLY

UTILITY PLAN

SCALE: 1" = 20'

U-7

REVISED BY	DATE REVISED
NT	4/6/10

NIEN TRINH — CALCULATED-DESIGNED BY
MICHAEL T. NGUYEN — CHECKED BY
MICHAEL T. NGUYEN — FUNCTIONAL SUPERVISOR

STATE OF CALIFORNIA - DEPARTMENT OF TRANSPORTATION
Caltrans®
DESIGN

LAST REVISION 04-15-10
DATE PLOTTED => 25-JUN-2010
TIME PLOTTED => 16:58

Dist	COUNTY	ROUTE	POST MILES TOTAL PROJECT	SHEET No.	TOTAL SHEETS
04	SF	80	4.9/5.9	41	127

REGISTERED CIVIL ENGINEER 4-15-10 DATE

6-21-10
PLANS APPROVAL DATE

REGISTERED PROFESSIONAL ENGINEER Nien Trinh No. 67739 Exp. 6-30-11 CIVIL STATE OF CALIFORNIA

THE STATE OF CALIFORNIA OR ITS OFFICERS OR AGENTS SHALL NOT BE RESPONSIBLE FOR THE ACCURACY OR COMPLETENESS OF SCANNED COPIES OF THIS PLAN SHEET.

NOTE:

FOR ACCURATE RIGHT OF WAY AND ACCESS DATA,
CONTACT RIGHT OF WAY ENGINEERING AT THE DISTRICT OFFICE.

SEE SHEET U-9

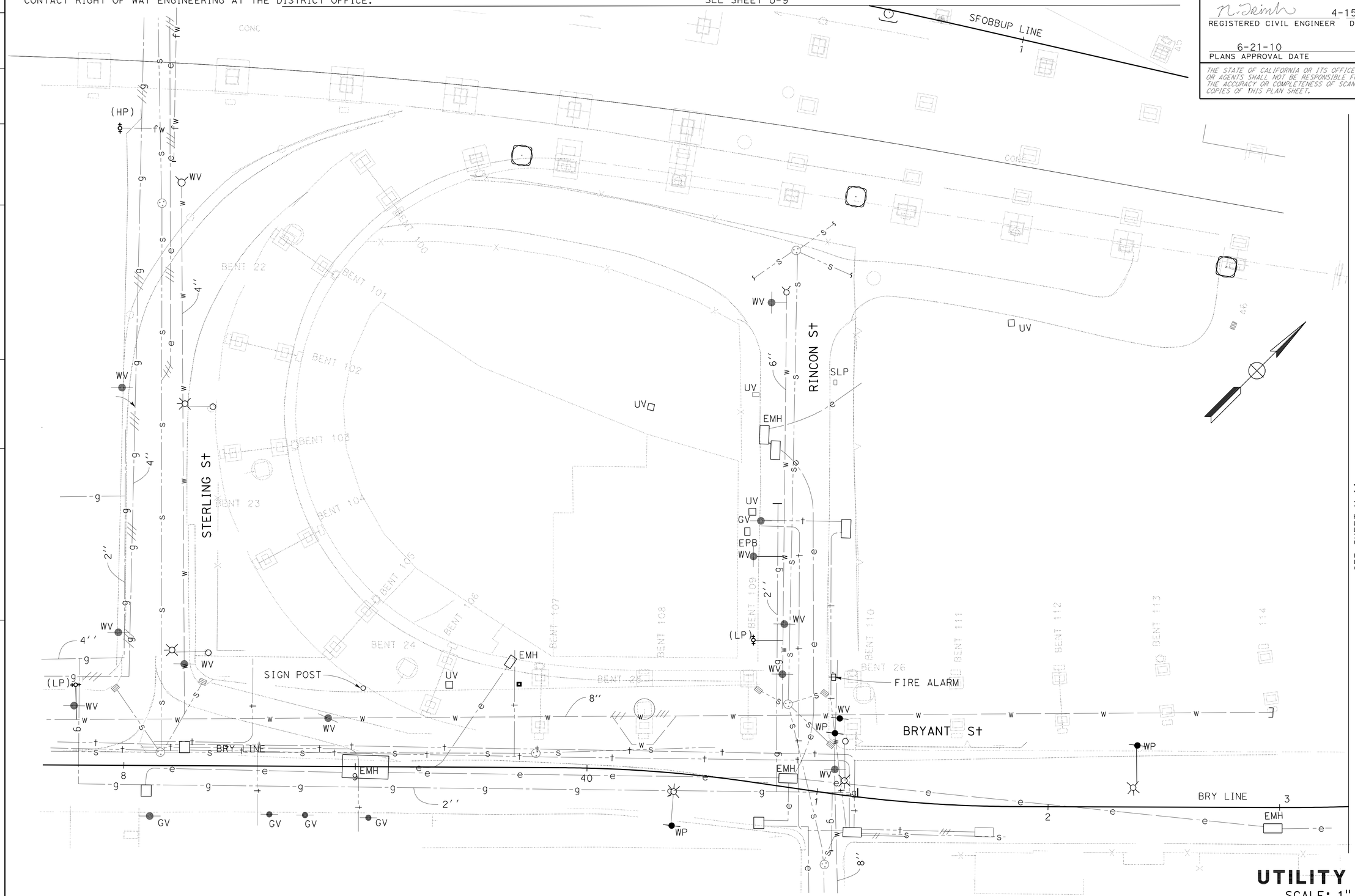

FOR NOTES, ABBREVIATIONS AND LEGEND, SEE SHEET U-1

THIS PLAN ACCURATE FOR UTILITY INFORMATION ONLY

UTILITY PLAN

SCALE: 1" = 20'

U-8

REVISED BY	DATE REVISED
NT	4/6/10

CALCULATED-DESIGNED BY: NIEN TRINH
CHECKED BY: MICHAEL T. NGUYEN
FUNCTIONAL SUPERVISOR: MICHAEL T. NGUYEN

STATE OF CALIFORNIA - DEPARTMENT OF TRANSPORTATION
Caltrans
DESIGN

LAST REVISION 04-15-10
DATE PLOTTED => 25-JUN-2010
TIME PLOTTED => 16:58

Dist	COUNTY	ROUTE	POST MILES TOTAL PROJECT	SHEET No.	TOTAL SHEETS
04	SF	80	4.9/5.9	42	127

N. Trinh 4-15-10
REGISTERED CIVIL ENGINEER DATE

6-21-10
PLANS APPROVAL DATE

REGISTERED PROFESSIONAL ENGINEER
Nien Trinh
No. 67739
Exp. 6-30-11
CIVIL
STATE OF CALIFORNIA

THE STATE OF CALIFORNIA OR ITS OFFICERS OR AGENTS SHALL NOT BE RESPONSIBLE FOR THE ACCURACY OR COMPLETENESS OF SCANNED COPIES OF THIS PLAN SHEET.

NOTE:

FOR ACCURATE RIGHT OF WAY AND ACCESS DATA, CONTACT RIGHT OF WAY ENGINEERING AT THE DISTRICT OFFICE.

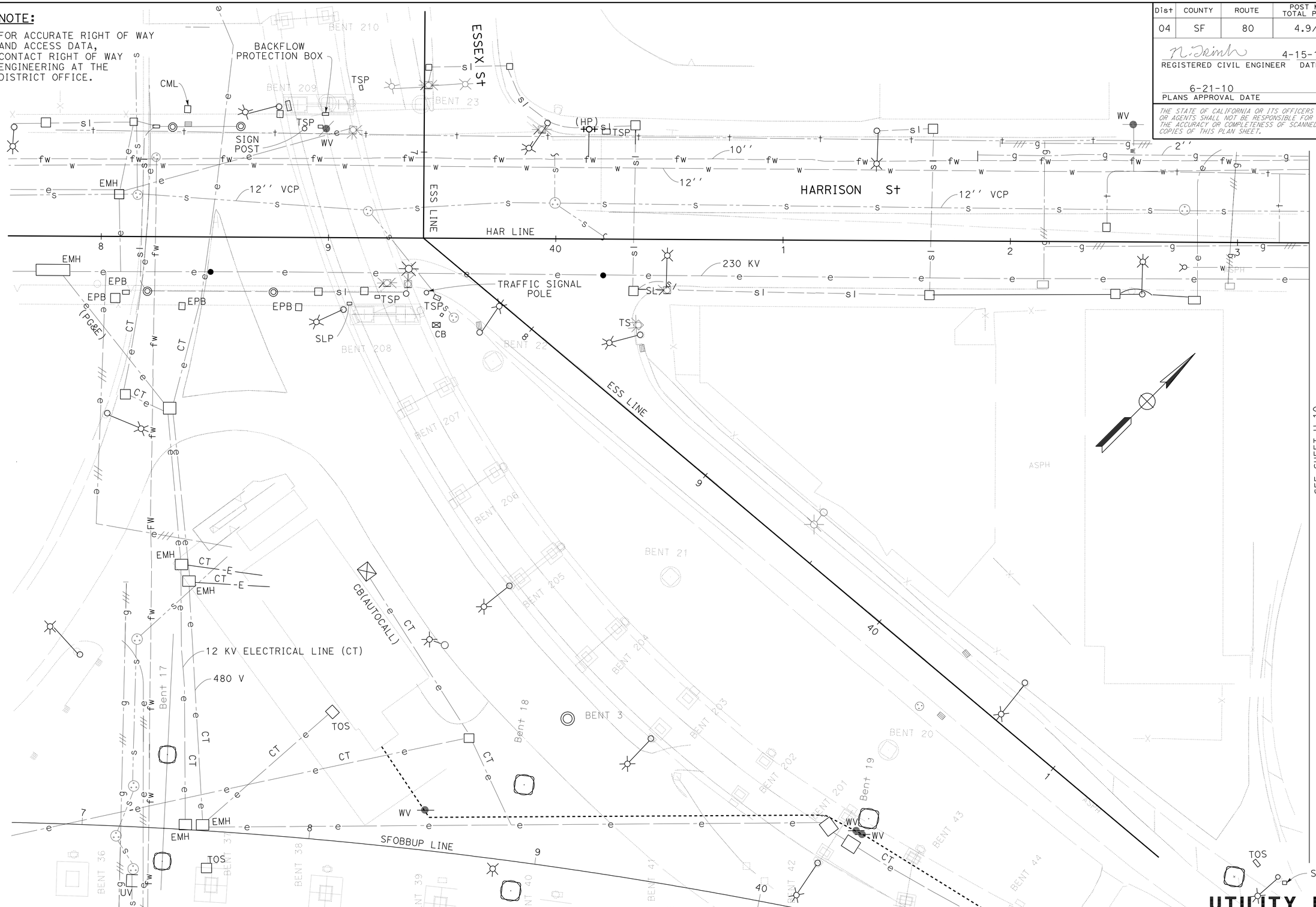

FOR NOTES, ABBREVIATIONS AND LEGEND, SEE SHEET U-1

THIS PLAN ACCURATE FOR UTILITY INFORMATION ONLY

UTILITY PLAN

SCALE: 1" = 20'

U-9

NIEN TRINH	NT
MICHAEL T. NGUYEN	4/6/10
CALCULATED-DESIGNED BY	REVISED BY
CHECKED BY	DATE REVISED
FUNCTIONAL SUPERVISOR	
MICHAEL T. NGUYEN	

STATE OF CALIFORNIA - DEPARTMENT OF TRANSPORTATION
Caltrans
DESIGN

LAST REVISION 04-15-10 | DATE PLOTTED => 25-JUN-2010 | TIME PLOTTED => 16:58

Dist	COUNTY	ROUTE	POST MILES TOTAL PROJECT	SHEET No.	TOTAL SHEETS
04	SF	80	4.9/5.9	43	127

REGISTERED CIVIL ENGINEER 4-15-10 DATE

6-21-10
PLANS APPROVAL DATE

REGISTERED PROFESSIONAL ENGINEER Nien Trinh No. 67739 Exp. 6-30-11 CIVIL STATE OF CALIFORNIA

THE STATE OF CALIFORNIA OR ITS OFFICERS OR AGENTS SHALL NOT BE RESPONSIBLE FOR THE ACCURACY OR COMPLETENESS OF SCANNED COPIES OF THIS PLAN SHEET.

NOTE:

FOR ACCURATE RIGHT OF WAY AND ACCESS DATA, CONTACT RIGHT OF WAY ENGINEERING AT THE DISTRICT OFFICE.

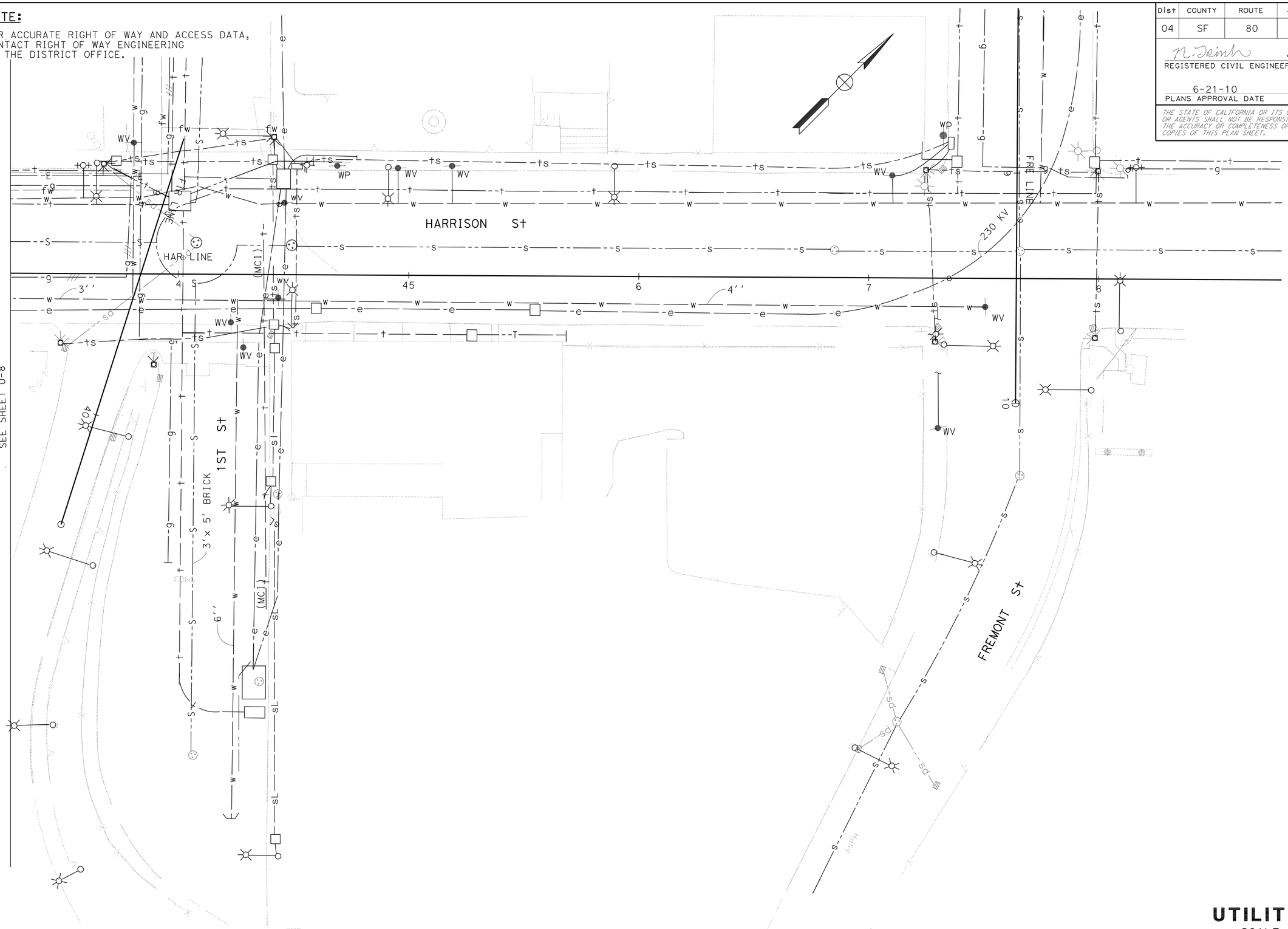

FOR NOTES, ABBREVIATIONS AND LEGEND, SEE SHEET U-1

THIS PLAN ACCURATE FOR UTILITY INFORMATION ONLY

UTILITY PLAN

SCALE: 1" = 20'

U-10

STATE OF CALIFORNIA - DEPARTMENT OF TRANSPORTATION

Caltrans

DESIGN

FUNCTIONAL SUPERVISOR: MICHAEL T. NGUYEN

CALCULATED-DESIGNED BY: NIEN TRINH

CHECKED BY: MICHAEL T. NGUYEN

REVISED BY: NT

DATE REVISED: 4/6/10

LAST REVISION: 04-15-10

DATE PLOTTED => 25-JUN-2010

TIME PLOTTED => 16:58

BORDER LAST REVISED 4/11/2008

RELATIVE BORDER SCALE IS IN INCHES 0 1 2 3

USERNAME => trliim

DGN FILE => 40435eka010.dgn

CU 04213

EA 0435E1

Dist	COUNTY	ROUTE	POST MILES TOTAL PROJECT	SHEET No.	TOTAL SHEETS
04	SF	80	4.9/5.9	44	127

N. Trinh 4-15-10
REGISTERED CIVIL ENGINEER DATE

6-21-10
PLANS APPROVAL DATE

REGISTERED PROFESSIONAL ENGINEER
Nien Trinh
No. 67739
Exp. 6-30-11
CIVIL
STATE OF CALIFORNIA

THE STATE OF CALIFORNIA OR ITS OFFICERS OR AGENTS SHALL NOT BE RESPONSIBLE FOR THE ACCURACY OR COMPLETENESS OF SCANNED COPIES OF THIS PLAN SHEET.

NOTE:

FOR ACCURATE RIGHT OF WAY AND ACCESS DATA,
CONTACT RIGHT OF WAY ENGINEERING AT THE DISTRICT OFFICE.

SEE SHEET U-10

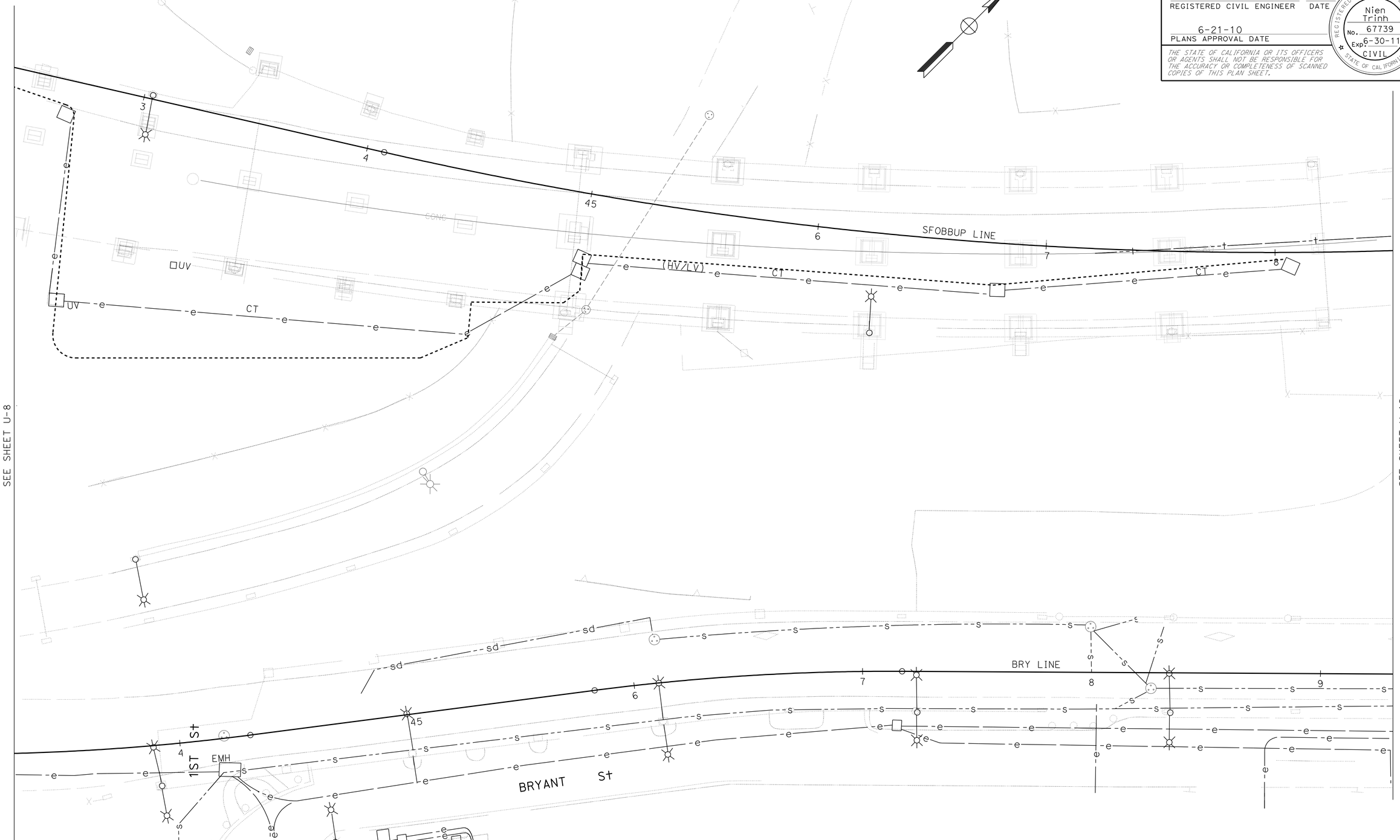

FOR NOTES, ABBREVIATIONS AND LEGEND, SEE SHEET U-1

THIS PLAN ACCURATE FOR UTILITY INFORMATION ONLY

UTILITY PLAN

SCALE: 1" = 20'

U-11

NT	4/6/10
REVISED BY	DATE REVISED
NIEN TRINH	MICHAEL T. NGUYEN
CALCULATED-DESIGNED BY	CHECKED BY
FUNCTIONAL SUPERVISOR	MICHAEL T. NGUYEN

STATE OF CALIFORNIA - DEPARTMENT OF TRANSPORTATION
Caltrans
DESIGN

LAST REVISION 04-15-10 | DATE PLOTTED => 28-JUN-2010 | TIME PLOTTED => 13:51

Dist	COUNTY	ROUTE	POST MILES TOTAL PROJECT	SHEET No.	TOTAL SHEETS
04	SF	80	4.9/5.9	45	127

N. Trinh 4-15-10
REGISTERED CIVIL ENGINEER DATE

6-21-10
PLANS APPROVAL DATE

REGISTERED PROFESSIONAL ENGINEER
Nien Trinh
No. 67739
Exp. 6-30-11
CIVIL
STATE OF CALIFORNIA

THE STATE OF CALIFORNIA OR ITS OFFICERS OR AGENTS SHALL NOT BE RESPONSIBLE FOR THE ACCURACY OR COMPLETENESS OF SCANNED COPIES OF THIS PLAN SHEET.

NOTE:

FOR ACCURATE RIGHT OF WAY AND ACCESS DATA,
CONTACT RIGHT OF WAY ENGINEERING AT THE DISTRICT OFFICE.

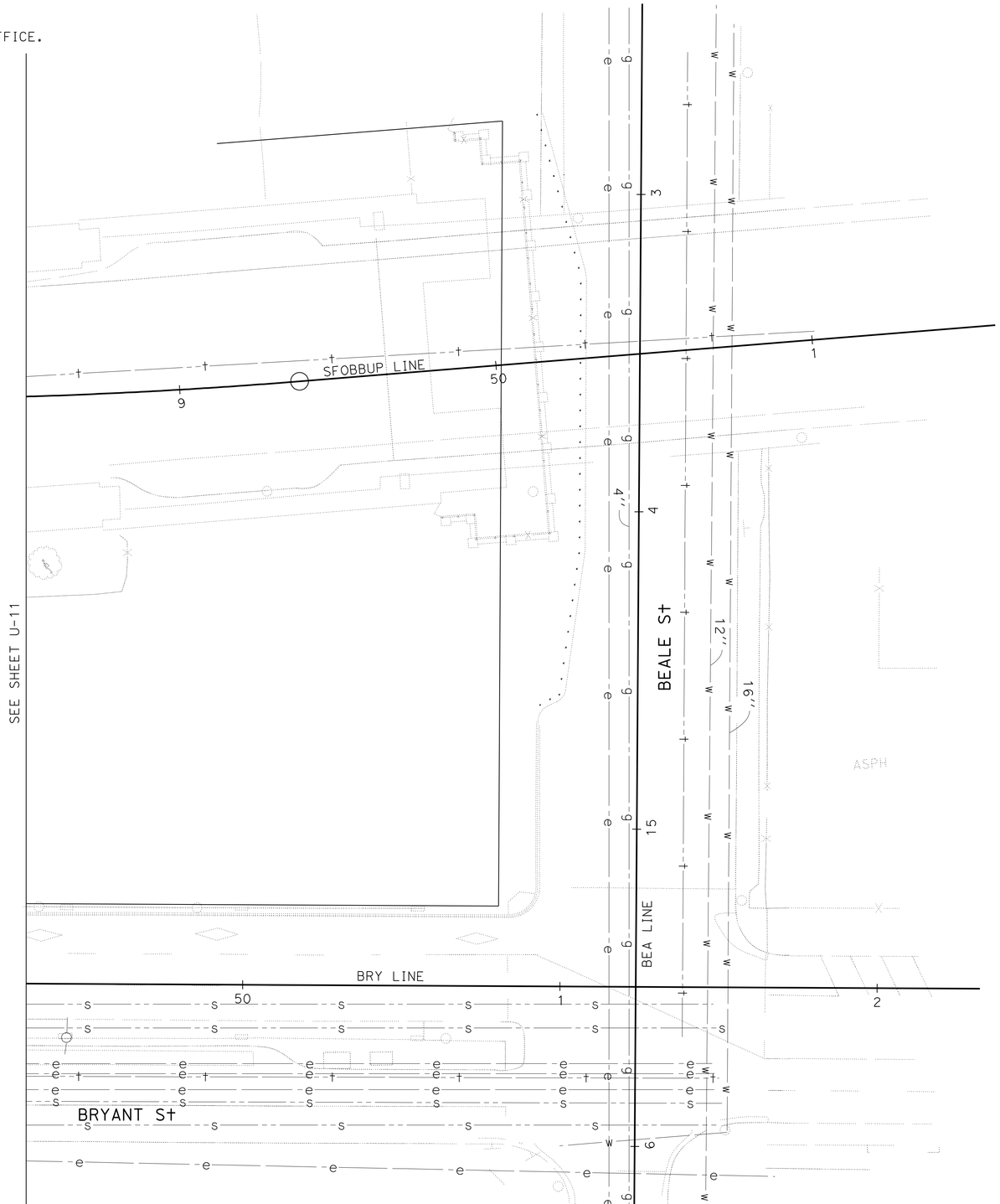

FOR NOTES, ABBREVIATIONS AND LEGEND, SEE SHEET U-1

THIS PLAN ACCURATE FOR UTILITY INFORMATION ONLY

UTILITY PLAN

SCALE: 1" = 20'

U-12

NIEN TRINH	NT
MICHAEL T. NGUYEN	4/6/10
CALCULATED-DESIGNED BY	REVISED BY
CHECKED BY	DATE REVISED
FUNCTIONAL SUPERVISOR	
MICHAEL T. NGUYEN	

STATE OF CALIFORNIA - DEPARTMENT OF TRANSPORTATION
Caltrans
DESIGN

LAST REVISION 04-15-10 | DATE PLOTTED => 25-JUN-2010 | TIME PLOTTED => 16:58

Dist	COUNTY	LOCATION CODE	POST MILES TOTAL PROJECT	SHEET No.	TOTAL SHEETS
04	SF	80	4.9/5.9	46	127

REGISTERED CIVIL ENGINEER DATE 4-15-10

PLANS APPROVAL DATE 6-21-10

REGISTERED PROFESSIONAL ENGINEER Jerilyn L. Struven No. 49964 Exp. 12-31-10 CIVIL STATE OF CALIFORNIA

THE STATE OF CALIFORNIA OR ITS OFFICERS OR AGENTS SHALL NOT BE RESPONSIBLE FOR THE ACCURACY OR COMPLETENESS OF ELECTRONIC COPIES OF THIS PLAN SHEET.

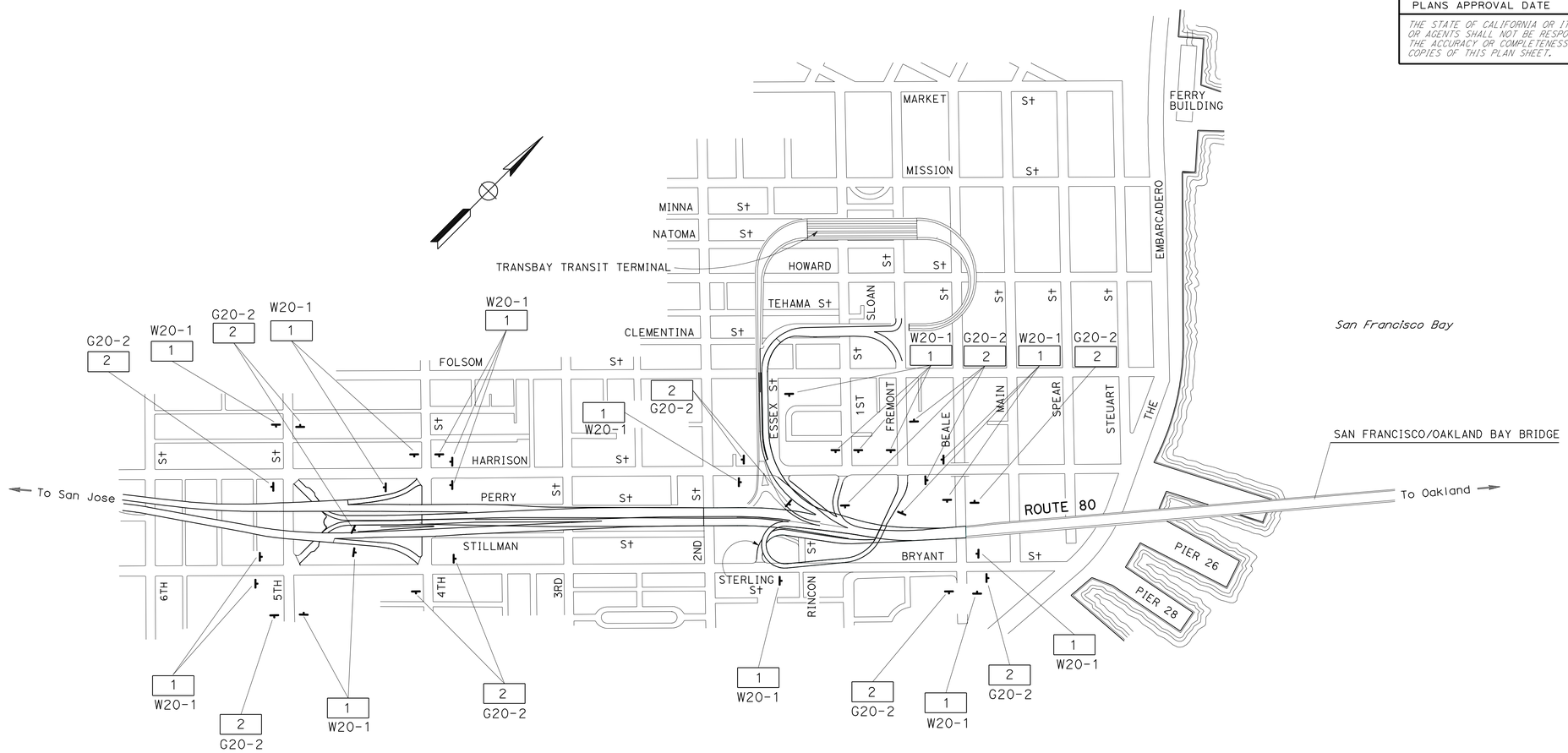

LEGEND:

[No.] CONSTRUCTION AREA SIGN NUMBER

NOTES:

1. LOCATION OF CONSTRUCTION AREA SIGNS SHOWN ARE APPROXIMATE. EXACT LOCATIONS TO BE DETERMINED BY THE ENGINEER.
2. CONSTRUCTION AREA SIGNS ARE STATIONARY MOUNTED.
3. POST LENGTH GIVEN IS APPROXIMATE. EXACT SIZE AND LENGTH OF WOOD POSTS TO BE DETERMINED BY THE ENGINEER.

CONSTRUCTION AREA SIGNS

SIGN	CODE	PANEL SIZE (INCH x INCH)	SIGN MESSAGE	No. OF SIGNS (EA)	POST SIZE (EA - INCH x INCH)	REMARKS
1	W20-1	48 x 48	ROAD WORK AHEAD	21	1 - 4 x 6	
2	G20-2	48 x 24	END ROAD WORK	14	1 - 4 x 6	

THIS PLAN ACCURATE FOR CONSTRUCTION AREA SIGN WORK ONLY

CONSTRUCTION AREA SIGNS

NO SCALE

CS-1

STATE OF CALIFORNIA - DEPARTMENT OF TRANSPORTATION

Caltrans TRAFFIC

FUNCTIONAL SUPERVISOR: ROLAND AU-YEUNG

CALCULATED-DESIGNED BY: ULICES VEGA

CHECKED BY: JERILYN L. STRUVEN

REVISED BY: UV

DATE REVISED: 4/15/10

LAST REVISION 06-12-10

DATE PLOTTED => 25-JUN-2010

TIME PLOTTED => 17:23

Dist	COUNTY	LOCATION CODE	POST MILES TOTAL PROJECT	SHEET No.	TOTAL SHEETS
04	SF	80	4.9/5.9	47	127

REGISTERED CIVIL ENGINEER DATE 4-15-10

PLANS APPROVAL DATE 6-21-10

REGISTERED PROFESSIONAL ENGINEER Jerilyn L. Struven No. 49964 Exp. 12-31-10 CIVIL STATE OF CALIFORNIA

THE STATE OF CALIFORNIA OR ITS OFFICERS OR AGENTS SHALL NOT BE RESPONSIBLE FOR THE ACCURACY OR COMPLETENESS OF ELECTRONIC COPIES OF THIS PLAN SHEET.

LEGEND:

(No.) ROADSIDE SIGN

■ REMOVE ROADSIDE SIGN

▲ RELOCATE ROADSIDE SIGN

MAST-ARM

NOTES:

1. LOCATION OF ROADSIDE SIGNS ARE APPROXIMATE. EXACT LOCATION WILL BE DETERMINED BY THE ENGINEER.
2. POST LENGTH GIVEN IS APPROXIMATE. EXACT SIZE AND LENGTH OF WOOD POSTS TO BE DETERMINED BY THE ENGINEER.

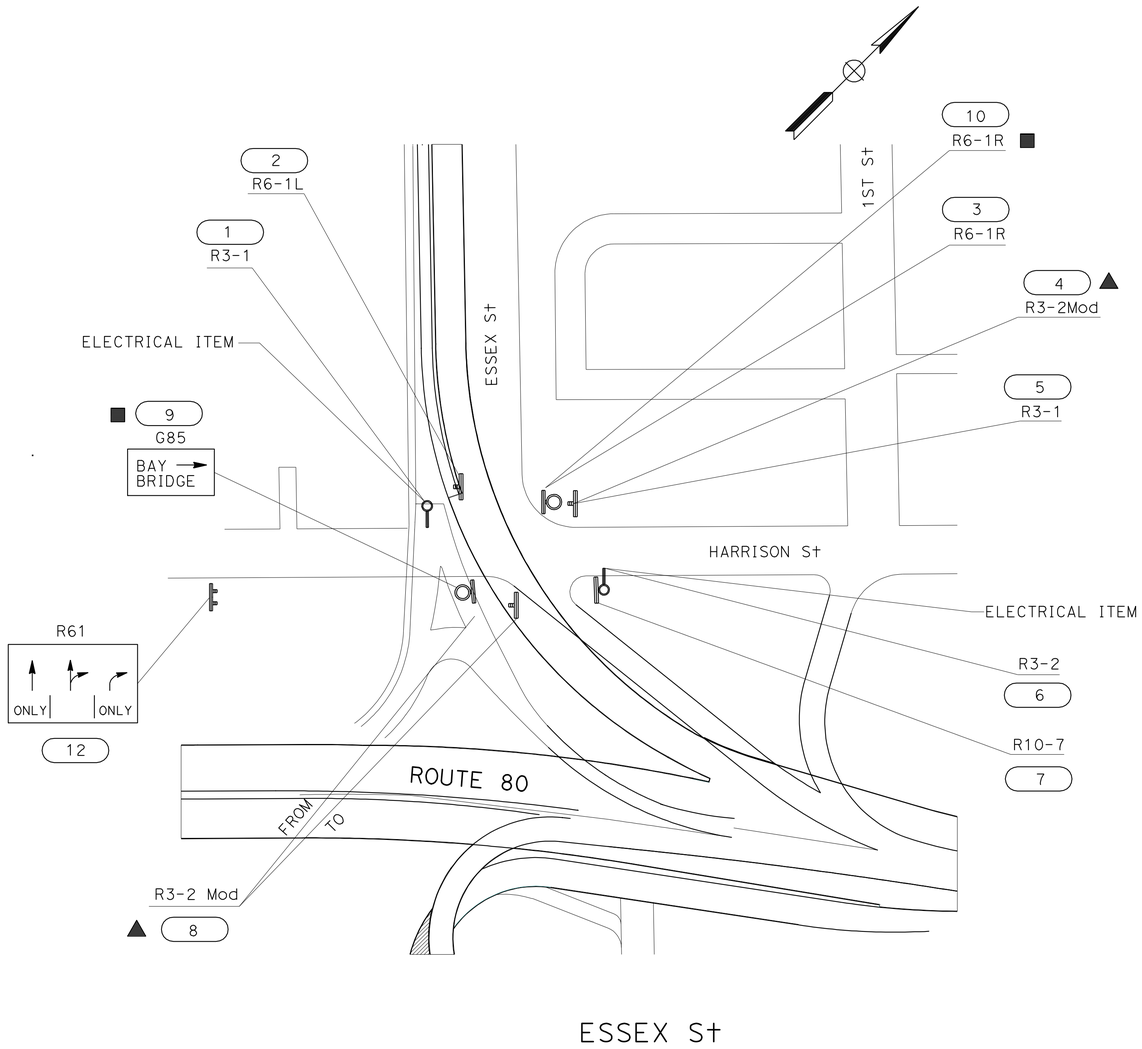

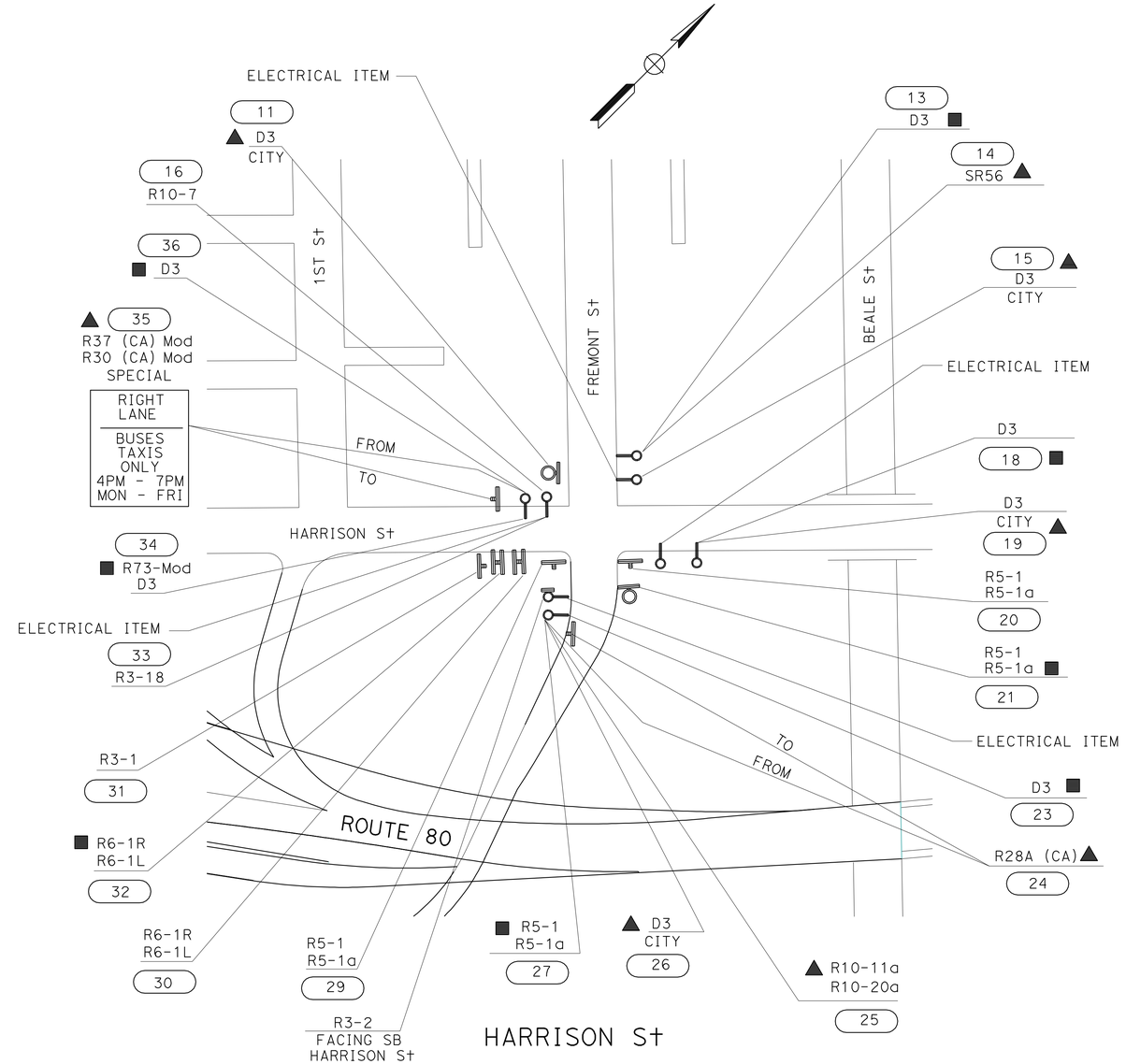

SIGN PLAN

NO SCALE

THIS PLAN ACCURATE FOR CONSTRUCTION AREA SIGN WORK ONLY

S-1

STATE OF CALIFORNIA - DEPARTMENT OF TRANSPORTATION

Caltrans

TRAFFIC

FUNCTIONAL SUPERVISOR: ROLAND AU-YEUNG

CALCULATED-DESIGNED BY: ULICES VEGA

CHECKED BY: JERILYN L. STRUVEN

REVISED BY: UV

DATE REVISED: 4/15/10

LAST REVISION 06-12-10

DATE PLOTTED => 25-JUN-2010

TIME PLOTTED => 17:23

Dist	COUNTY	LOCATION CODE	POST MILES TOTAL PROJECT	SHEET No.	TOTAL SHEETS
04	SF	80	4.9/5.9	48	127

REGISTERED CIVIL ENGINEER DATE 4-15-10

6-21-10
PLANS APPROVAL DATE

REGISTERED PROFESSIONAL ENGINEER Jerilyn L. Struven No. 49964 Exp. 12-31-10 CIVIL STATE OF CALIFORNIA

THE STATE OF CALIFORNIA OR ITS OFFICERS OR AGENTS SHALL NOT BE RESPONSIBLE FOR THE ACCURACY OR COMPLETENESS OF ELECTRONIC COPIES OF THIS PLAN SHEET.

ROADSIDE SIGN QUANTITIES

SIGN No.	CODE	PANEL SIZE	POST SIZE & LENGTH		ROADSIDE SIGN	INSTALL SIGN (STRAP & SADDLE BRACKET METHOD)	REMOVE ROADSIDE SIGN	RELOCATE ROADSIDE SIGN	REMARKS
					ONE POST				
		INCH x INCH	4" x 4"	4" x 6"	EA				
1	R3-1	30 x 30				1			ON MAST ARM
2	R6-1L	36 x 12	X		1				
3	R6-1R	36 x 12				1			
4	R3-2 Mod							1	RELOCATE CITY SIGN TO NEW SIGNAL POLE
5	R3-1	30 x 30				1			
6	R3-2	30 x 30				1			ON MAST ARM
7	R10-7	24 x 30				1			
8	R3-2 Mod			X				1	RELOCATE CITY SIGN TO NEW POST
9	G85						1		
10	R6-1R						1		
11	D3 (Fremont)							1	RELOCATE CITY SIGN TO NEW SIGNAL POLE
12	R61	48 x 30		X	1				
13	D3						1		*
14	SR56							1	RELOCATE SIGN TO NEW SIGNAL POLE
15	D3 (Harrison)							1	RELOCATE CITY SIGN TO NEW SIGNAL POLE
16	R10-7	24 x 30				1			
17	DELETED								
18	D3						1		*
19	D3 (Fremont)							1	RELOCATE CITY SIGN TO NEW SIGNAL POLE
20	R5-1	36 x 36		X	1				
	R5-1a	36 x 24							
21	R5-1						1		
	R5-1a						1		
22	DELETED								
23	D3						1		*
24	R28A (CA)		X					1	
25	R10-11a							1	RELOCATE SIGN TO NEW SIGNAL POLE
	R10-20a							1	RELOCATE SIGN TO NEW SIGNAL POLE
26	D3 (Harrison)							1	RELOCATE CITY SIGN TO NEW SIGNAL POLE
27	R5-1						1		
	R5-1a						1		
28	R3-2	30 x 30				1			
29	R5-1	36 x 36		X	1				
	R5-1a	36 x 24							
30	R6-1R	36 x 12	X		1				
	R6-1L	36 x 12							
31	R3-1	30 x 30	X		1				
32	R6-1R						1		
	R6-1L						1		
33	R3-18	30 x 30				1			* ON MAST ARM
34	R73 Mod						1		*
	D3						1		*
35	R37 (CA) Mod			X				1	
	R30 (CA) Mod								
	SPECIAL								
36	D3						1		*
	TOTAL				6	7	8	11	

* INSTALLATION OR REMOVAL PAID UNDER ELECTRICAL ITEM

SIGN QUANTITIES

SQ-1

STATE OF CALIFORNIA - DEPARTMENT OF TRANSPORTATION
Caltrans
TRAFFIC

FUNCTIONAL SUPERVISOR: ROLAND AU-YEUNG
CALCULATED-DESIGNED BY: ULICES VEGA
CHECKED BY: JERILYN L. STRUVEN
REVISED BY: UV
DATE REVISED: 4/15/10

LAST REVISION 06-12-10 | DATE PLOTTED => 25-JUN-2010 | TIME PLOTTED => 16:59

Dist	COUNTY	LOCATION CODE	POST MILES TOTAL PROJECT	SHEET No.	TOTAL SHEETS
04	SF	80	4.9/5.9	49	127

REGISTERED CIVIL ENGINEER DATE 4-15-10

PLANS APPROVAL DATE 6-21-10

REGISTERED PROFESSIONAL ENGINEER Jerilyn L. Struven No. 49964 Exp. 12-31-10 CIVIL STATE OF CALIFORNIA

THE STATE OF CALIFORNIA OR ITS OFFICERS OR AGENTS SHALL NOT BE RESPONSIBLE FOR THE ACCURACY OR COMPLETENESS OF ELECTRONIC COPIES OF THIS PLAN SHEET.

SIGN PANEL SUMMARY

SIGN No.	SIGN CODE	SIGN SIZE (INCH x INCH)	SIGN AREA (SQFT)	SINGLE FACED	DOUBLE FACED	BACKGROUND: SHEETING COLOR	BACKGROUND: RETRO-REFLECTIVE ASTM TYPE	LEGEND: SHEETING COLOR	LEGEND: RETRO-REFLECTIVE ASTM TYPE	PROTECTIVE OVERLAY: STANDARD	PROTECTIVE OVERLAY: PREMIUM	ROADSIDE SIGNS (SQFT): SINGLE SHEET: FRP 0.134"	SINGLE SHEET: FRAMED ALUMINUM 0.063"	SINGLE SHEET: FRAMED ALUMINUM 0.080"	SINGLE SHEET: UNFRAMED ALUMINUM 0.063"	SINGLE SHEET: UNFRAMED ALUMINUM 0.080"	SINGLE SHEET: UNFRAMED ALUMINUM 0.134"	LAMINATED: 1" TYPE B	LAMINATED: 2.6" TYPE B	LAMINATED: 2.6" TYPE H	FORMED	OVERHEAD: LAMINATED TYPE A	OVERHEAD: FORMED w/o RSPF	OVERHEAD: FORMED WITH RSPF	DESCRIPTION
1	R3-1	30 x 30	6.25	X		WHITE	III	BLACK/RED	PLAIN/III		X				X										NO RIGHT TURN SYMBOL
2	R6-1L	36 x 12	3	X		WHITE	III	BLACK	PLAIN		X				X										ONE WAY ARROW
3	R6-1R	36 x 12	3	X		WHITE	III	BLACK	PLAIN		X				X										ONE WAY ARROW
5	R3-1	30 x 30	6.25	X		WHITE	III	BLACK/RED	PLAIN/III		X				X										NO RIGHT TURN SYMBOL
6	R3-1	30 x 30	6.25	X		WHITE	III	BLACK/RED	PLAIN/III		X				X										NO RIGHT TURN SYMBOL
7	R10-7	24 x 30	5	X		WHITE	III	BLACK	PLAIN		X				X										DO NOT BLOCK INTERSECTION
12	R61	48 x 30	10	X		WHITE	III	BLACK	PLAIN		X				X										
16	R10-7	24 x 30	5	X		WHITE	III	BLACK	PLAIN		X				X										DO NOT BLOCK INTERSECTION
20	R5-1	36 x 36	9	X		WHITE	III	RED	III		X				X										DO NOT ENTER
	R5-1a	36 x 24	6	X		WHITE	III	RED	III		X				X										WRONG WAY
28	R3-2	30 x 30	6.25	X		WHITE	III	BLACK/RED	PLAIN/III		X				X										NO LEFT TURN SYMBOL
29	R5-1	36 x 36	9	X		WHITE	III	RED	III		X				X										DO NOT ENTER
	R5-1a	36 x 24	6	X		WHITE	III	RED	III		X				X										WRONG WAY
30	R6-1R	36 x 12	3	X		WHITE	III	BLACK	PLAIN		X				X										ONE WAY ARROW
	R6-1L	36 x 12	3	X		WHITE	III	BLACK	PLAIN		X				X										ONE WAY ARROW
31	R3-1	30 x 30	6.25	X		WHITE	III	BLACK	PLAIN/III		X				X										NO RIGHT TURN SYMBOL
33	R3-18	30 x 30	6.25	X		WHITE	III	BLACK/RED	PLAIN/III		X				X										NO LEFT - NO U-TURN SYMBOL
TOTAL			99.5																						

SIGN QUANTITIES
CONTRACTOR FURNISHED SIGNS

SQ-2

ULICES VEGA	REVISED BY	UV	
JERILYN L. STRUVEN	DATE REVISED	4/15/10	
CALCULATED-DESIGNED BY			
CHECKED BY			
FUNCTIONAL SUPERVISOR			
ROLAND AU-YEUNG			

STATE OF CALIFORNIA - DEPARTMENT OF TRANSPORTATION

Caltrans TRAFFIC

LAST REVISION 06-12-10 | DATE PLOTTED => 25-JUN-2010 | TIME PLOTTED => 16:59

Dist	COUNTY	ROUTE	POST MILES TOTAL PROJECT	SHEET No.	TOTAL SHEETS
04	SF	80	4.9/5.9	50	127

N. Trinh 4/15/10
REGISTERED CIVIL ENGINEER DATE

6-21-10
PLANS APPROVAL DATE

REGISTERED PROFESSIONAL ENGINEER Nien Trinh No. 67739 Exp. 6-30-11 CIVIL STATE OF CALIFORNIA

THE STATE OF CALIFORNIA OR ITS OFFICERS OR AGENTS SHALL NOT BE RESPONSIBLE FOR THE ACCURACY OR COMPLETENESS OF SCANNED COPIES OF THIS PLAN SHEET.

ROADWAY QUANTITIES

LOCATION	MINOR HMA	REMOVE AC DIKE	AC DIKE (TYPE A)	AC DIKE (TYPE F)
	TON	LF		
RINCON St	3.00			209
CLOCK TOWER @ 2ND St	0.64		21	
HARRISON PARKING LOT	175.60	125	125	
TOTAL	179.24	125	146	209

ROADWAY QUANTITIES

STATION	REMOVE GUARD POST	ROADWAY EXCAVATION	CONCRETE RUBBLE REMOVAL [N]	ASPHALT CONCRETE REMOVAL [N]	SUB-EXCAVATION [N]	EMBANKMENT [N]	ROADWAY EXCAVATION (TYPE Z-2)	REMOVE CL FENCE	CHAIN LINK FENCE (TYPE CL-4)	CHAIN LINK FENCE (TYPE CL-6)	CHAIN LINK GATE (TYPE CL-6)	PICKET RAILING	PICKET FENCE (4')	PICKET FENCE (8')	PICKET GATE (4')	PICKET GATE (8')	PIPE HANDRAILING
	EA	CY						LF									
BRY TO BEA		1840		340	160	210	155										
85' Rt TO 200' Rt BEA 13+00		50	50														
129.6' Lt BRY 49+67 TO 138.8' Lt BRY 50+67	21																
HAR 9+68											4						
HAR 9+68.14 TO 10+46.07								200		200							
HAR 14+10.76 TO HAR 15+55.45								220		220							
HAR 14+34.76 TO HAR 15+04.11								80		80							
HAR 16+43											4						
BRY 10+56.38 TO 10+56.45								30									
BRY 14+00.71 TO 16+37.82								270		270							
BRY 16+40											4						
BRY 14+17.62 TO 14+85.04								100		100							
ESS 38+39.64 TO 40+54.32								225		225							
BRY 46+53.24 TO BEA 14+09.91								670									
BRY 46+76.02 TO 49+60.96									360								
BRY 49+36.03 TO 49+95.89									85								
BRY 44+41.04 TO 50+29.12												600					
BRY 50+02.13 TO 50+02.14													18		8		
52' Lt BRY 50+12 TO 58.6' Lt BRY 50+22													24		8		
BRY 49+60.96 TO BEA 14+18.65														115		8	
DP 4+01.78 TO 3+23.98														132		8	
WB 1+10 TO 1+22																	12
WD 1+46.77 TO 1+58.77																	12
TOTAL	21	1890	50	340	160	210	155	1795	445	1095	12	600	42	247	16	16	24

[N] NOT A SEPARATE PAY ITEM. FOR INFORMATION ONLY.

SUMMARY OF QUANTITIES

Q-1

NIEN TRINH	NT
MICHAEL T. NGUYEN	4/6/10
REVISED BY	DATE REVISED
CALCULATED-DESIGNED BY	
CHECKED BY	
FUNCTIONAL SUPERVISOR	
MICHAEL T. NGUYEN	

STATE OF CALIFORNIA - DEPARTMENT OF TRANSPORTATION
Caltrans
DESIGN

LAST REVISION 06-14-10
DATE PLOTTED => 28-JUN-2010
TIME PLOTTED => 07:42

Dist	COUNTY	ROUTE	POST MILES TOTAL PROJECT	SHEET No.	TOTAL SHEETS
04	SF	80	4.9/5.9	51	127

N. Trinh 4/15/10
REGISTERED CIVIL ENGINEER DATE

6-21-10
PLANS APPROVAL DATE

REGISTERED PROFESSIONAL ENGINEER
Nien Trinh
No. 67739
Exp. 6-30-11
CIVIL
STATE OF CALIFORNIA

THE STATE OF CALIFORNIA OR ITS OFFICERS OR AGENTS SHALL NOT BE RESPONSIBLE FOR THE ACCURACY OR COMPLETENESS OF SCANNED COPIES OF THIS PLAN SHEET.

SITE FURNISHINGS

LOCATION	ITEM	QUANTITY
FIF AT BRY	BLUE STAR MEMORIAL POST	1
5TH St	BRONZE PLAQUES (SF)	4
5TH St	INTERPRETIVE SIGN	1
5TH St	WATER POST	2
BRYANT AND BEALE St	BENCH 19''	12
BRYANT AND BEALE St	BENCH 69''	4
BRYANT AND BEALE St	PET WASTE BAG DISPENSER	2
BRYANT AND BEALE St	TRASH RECEPTACLE	1
BRYANT AND BEALE St	INTERPRETIVE SIGN	1

ROADWAY QUANTITIES

STATION LIMITS	DESCRIPTION	STRUCTURAL EXCAVATION	STRUCTURE BACKFILL	MINOR CONCRETE (MISCELLANEOUS CONSTRUCTION) PAVING	MINOR CONCRETE (MISCELLANEOUS CONSTRUCTION) PLANTER/ BOLLARD/ DOG GATE BASE/PLAQUE/ INTERPRETIVE SIGN	STRUCTURAL CONCRETE RETAINING WALL	MINOR CONCRETE (EXPOSED AGGREGATE)	BAR REINFORCING STEEL RETAINING WALL	MISCELLANEOUS IRON AND STEEL	ASPHALT MEMBRANE WATER PROOFING	CLASS 3 AGGREGATE BASE	CLASS 4 AGGREGATE SUBBASE	SKATEBOARD DETERRENT CLIPS
		CY					SQFT	LBS		SQFT	CY		EA
DP 3+25 TO 4+50				37.34			225				56.58		
BRY 49+42.62 TO 50+02.14				9.72							14.73		
FIF 69+43.93 (5TH St)				23.53			305				35.65		
WA 1+00 TO 2.64.5	(12) Ret WALLS	106	83			45		6598.4		666			44
	(6) PLANTERS	8	3		10.5				324	113		1.33	
	(5) RETURN WALLS	7	4			3.3		381		111			
	(1) DOG GATE BASE	0.4	0.2		0.34				25.1	8		0.06	
	(1) BOLLARD	2	0.6		2.26				68.9	23		0.22	
WB 1+00 TO 1+75.41	(6) Ret WALLS	43.1	30.2			20.3		2865.8		304			18
	(4) PLANTERS	6.5	2.1		8.4				226.6	89		0.89	
	(2) RETURN WALLS	1.4	1.1			1.1		142		36			
	(1) INTERPRETIVE SIGN	1.9	0.6		1.7				26.8	25		0.21	
WC 1+00 TO 1+17.80	(1) Ret WALL	10.8	6.7			4.26		642.3		59			4
	(2) BOLLARDS	4	1		4.41				137	46		0.44	
WD 1+00 TO 1+61.71	(3) Ret WALLS	41	32			18.3		2936.4		304			14
	(1) BOLLARD	1.4	0.5		2.3				69	23		0.22	
	(1) DOG GATE BASE	0.4	0.2		0.3				25	8		0.06	
	(1) PLANTER	1.4	0.6		2.5				59	18		0.22	
WE 5+00 TO 6+09.98	(6) Ret WALLS	81.3	57			14.52		5244.3		490			30
	(4) PLAQUES	2.7	0.9		4.81				53.62	43		0.4	
	(1) INTERPRETIVE SIGN	1.7	0.5		2.44				23	22		0.21	
SUBTOTAL				70.59	40								
TOTAL		321	224.2	110.6		106.8	530	18810.2	1038	2388	106.96	4.26	110

SUMMARY OF QUANTITIES

Q-2

REVISED BY	DATE REVISED	NIEN TRINH	MICHAEL T. NGUYEN	CALCULATED-DESIGNED BY	CHECKED BY	FUNCTIONAL SUPERVISOR	MICHAEL T. NGUYEN
NT	4/6/10						

STATE OF CALIFORNIA - DEPARTMENT OF TRANSPORTATION
Caltrans
DESIGN

LAST REVISION 06-08-10 | DATE PLOTTED => 25-JUN-2010 | TIME PLOTTED => 16:59

Dist	COUNTY	ROUTE	POST MILES TOTAL PROJECT	SHEET No.	TOTAL SHEETS
04	SF	80	4.9/5.9	52	127

LICENSED LANDSCAPE ARCHITECT

6-21-10
PLANS APPROVAL DATE

LICENSED LANDSCAPE ARCHITECT
KIMBERLY WHITE No. 4893
Signature
2-28-12
Renewal Date
6-10-10
Date
STATE OF CALIFORNIA

THE STATE OF CALIFORNIA OR ITS OFFICERS OR AGENTS SHALL NOT BE RESPONSIBLE FOR THE ACCURACY OR COMPLETENESS OF SCANNED COPIES OF THIS PLAN SHEET.

IRRIGATION CROSSOVERS

LOCATION	CONDUIT TYPE (5) SIZE (INCH) 8	6	(N) WATER LINE CROSSOVER	(N) SPRINKLER CONTROL CROSSOVER
	LENGTH (LF)		SIZE (INCHES)	
75' Rt FIF 67+48.85 (5TH St ON-RAMP)	50		3	2
180' Lt BRY 40+23.35 (STERLING TO RINCON St CONNECTOR)		24	2	1
TOTAL	50	24		

(N) - NOT A SEPARATE PAY ITEM FOR INFORMATION ONLY
X - DENOTES REQUIREMENT

CONDUIT TYPE:
(APPLICABLE WHEN CIRCLED BELOW AND SHOWN UNDER THE 'CONDUIT TYPE' COLUMN HEADING)

1. BITUMINOUS COATED CORRUGATED STEEL PIPE (0.064 INCH THICK)
2. CORRUGATED STEEL PIPE (0.064 INCH THICK)
3. CORRUGATED HIGH DENSITY POLYETHYLENE PIPE
4. ALTERNATIVE CONDUIT
5. WELDED STEEL PIPE

WATER POLLUTION CONTROL QUANTITIES *

STATION LIMITS AND/ OR DESCRIPTION	TEMPORARY SILT FENCE	TEMPORARY CONSTRUCTION ENTRANCE	TEMPORARY DRAINAGE INLET PROTECTION	TEMPORARY CHECK DAM	TEMPORARY CONCRETE WASHOUT PORTABLE	TEMPORARY HYDRAULIC MULCH
	LF	EA		LF	EA	SQYD
5TH St			14	60		
4TH St			3			3700
ESSEX St			5	30		
ESSEX St ON-RAMP			6	150		4610
1ST St ON-RAMP			3			1660
BRY AT RINCON St DRIVEWAY	220			30		450
HARRISON St OFF-RAMP	320		7	90		6280
BRY 44+40 TO 47+00	360		1	60		
BEA 14+00 TO 15+00		1	1	60	1	3800
TOTAL	900	1	40	480	1	20500

*EXACT LOCATIONS TO BE DETERMINED BY THE ENGINEER.

LANDSCAPE QUANTITIES

STATION LIMITS	ROOT BARRIER	IMPORTED TOPSOIL	CLASS 2 AGGREGATE BASE	ROCK BLANKET	DECOMPOSED GRANITE	FILTER FABRIC [N]	ALUMINUM EDGING [N]	GRAVEL MULCH
	LF	CY		SQYD			LF	CY
BRY TO BEA			135		811	480	1454	158
FIF (5TH St)						4076	2319	1361
4TH St OFF-RAMP				595				
ESS (ESSEX St ON-RAMP)						1835	1040	305
ESSEX St				1085				
FIF 67+66 TO 68+24	58							
FIF 70+58 TO 71+16	58							
BRY 49+10 TO 49+40	30							
BRY 49+61 TO 49+88	32							
DP 3+56 TO 3+80	94							
DP 3+79 TO 3+80	28							
WA 1+00 TO 2+64.5		0.9						
WB 1+00 TO 1+75		0.6						
WD 1+00 TO 61.71		0.15						
Exist ANCHORAGE BARRIER WALL		2.4						
BEALE St (WEST ANCHORAGE NORTH SLOPE)		46						
TOTAL	300	50.05	135	1680	811	6391	4813	1824

IRRIGATION SLEEVES

LOCATION	SIZE (INCHES) 6
	LENGTH (LF)
192 ' Lt BRY 40+52 (RINCON St)	44
32' Lt BRY 49+85 (DOG PLAY AREA 2)	12
14' Lt DP 3+26.50 (BEALE PLAZA AND STAIR)	13
TOTAL	69

SUMMARY OF QUANTITIES

Q-3

STATE OF CALIFORNIA - DEPARTMENT OF TRANSPORTATION
Caltrans LANDSCAPE ARCHITECTURE

SENIOR LANDSCAPE ARCHITECT: LORENA WONG
CALCULATED-DESIGNED BY: KIMBERLY WHITE
CHECKED BY: CHRIS ELSE
REVISED BY: KW
DATE REVISED: 4/15/10

LAST REVISION 06-12-10
DATE PLOTTED => 25-JUN-2010
TIME PLOTTED => 16:59

Dist	COUNTY	ROUTE	POST MILES TOTAL PROJECT	SHEET No.	TOTAL SHEETS
04	SF	80	4.9/5.9	53	127

REGISTERED CIVIL ENGINEER 4-15-10 DATE

6-21-10
PLANS APPROVAL DATE

REGISTERED PROFESSIONAL ENGINEER Nien Trinh No. 67739 Exp 6-30-11 CIVIL STATE OF CALIFORNIA

THE STATE OF CALIFORNIA OR ITS OFFICERS OR AGENTS SHALL NOT BE RESPONSIBLE FOR THE ACCURACY OR COMPLETENESS OF SCANNED COPIES OF THIS PLAN SHEET.

NOTES:

1. TOP OF CONCRETE BOLLARDS AND TOP OF PLANTERS ARE LEVEL. ALL TOP OF RETAINING WALLS ARE LEVEL EXCEPT AT THE LOCATION OF THE CONCRETE RAMP.
2. SEE SHEET C-19 FOR ARCHITECTURAL LIGHT TYPE III LOCATIONS.

ABBREVIATIONS:

TF TOP OF FOOTING
TW TOP OF WALL

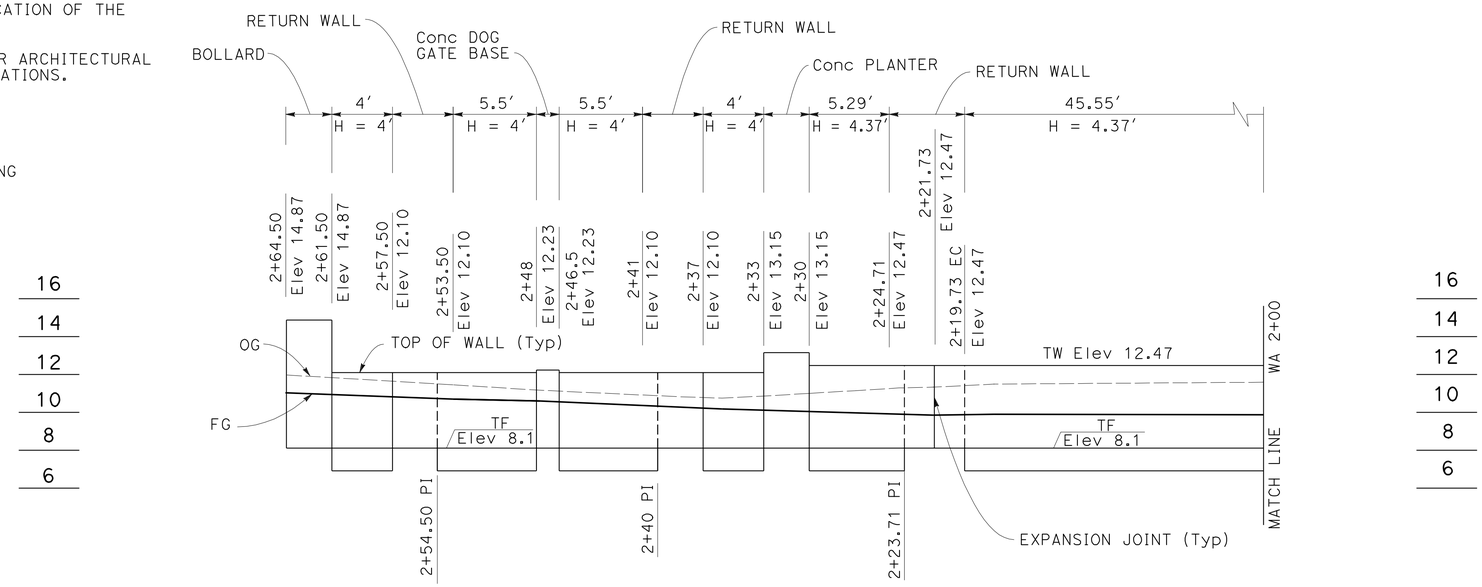

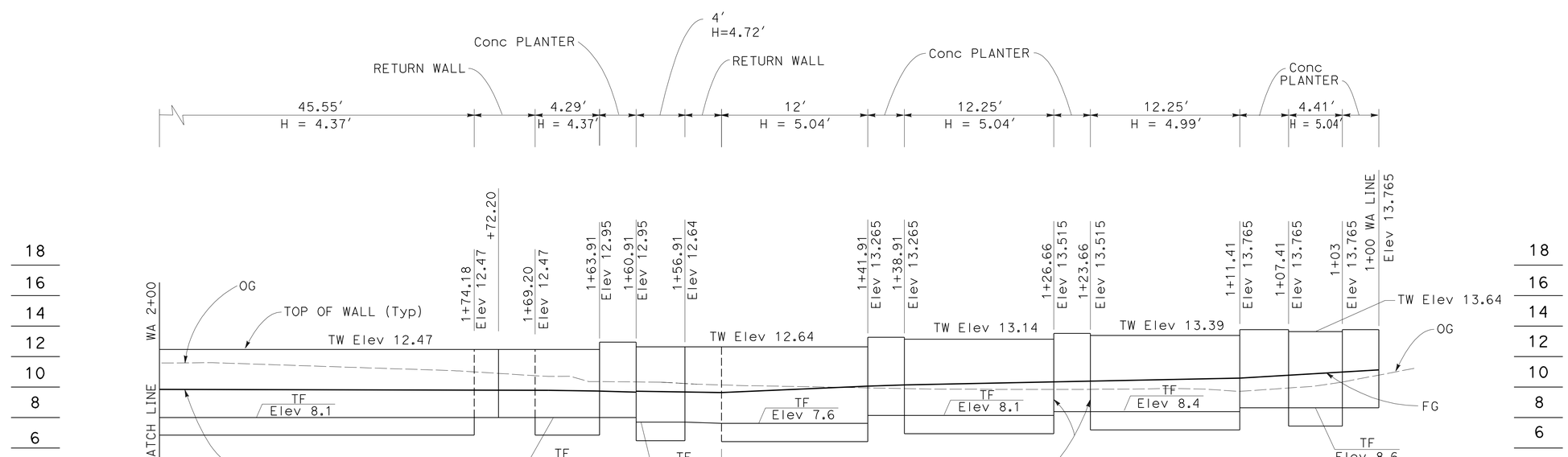

RETAINING WALL DETAILS
WA LINE
PROFILE

SCALE: HORIZ 1" = 5′
VERT 1" = 4′

R-1

NIEN TRINH — REVISED BY — NT
MICHAEL T. NGUYEN — DATE REVISED — 4/6/10
CALCULATED-DESIGNED BY
CHECKED BY
FUNCTIONAL SUPERVISOR
MICHAEL T. NGUYEN

STATE OF CALIFORNIA - DEPARTMENT OF TRANSPORTATION
Caltrans
DESIGN

LAST REVISION 06-10-10
DATE PLOTTED => 25-JUN-2010
TIME PLOTTED => 17:23

Dist	COUNTY	ROUTE	POST MILES TOTAL PROJECT	SHEET No.	TOTAL SHEETS
04	SF	80	4.9/5.9	54	127

REGISTERED CIVIL ENGINEER 4-15-10 DATE

6-21-10
PLANS APPROVAL DATE

REGISTERED PROFESSIONAL ENGINEER
Nien Trinh
No. 67739
Exp. 6-30-11
CIVIL
STATE OF CALIFORNIA

THE STATE OF CALIFORNIA OR ITS OFFICERS OR AGENTS SHALL NOT BE RESPONSIBLE FOR THE ACCURACY OR COMPLETENESS OF SCANNED COPIES OF THIS PLAN SHEET.

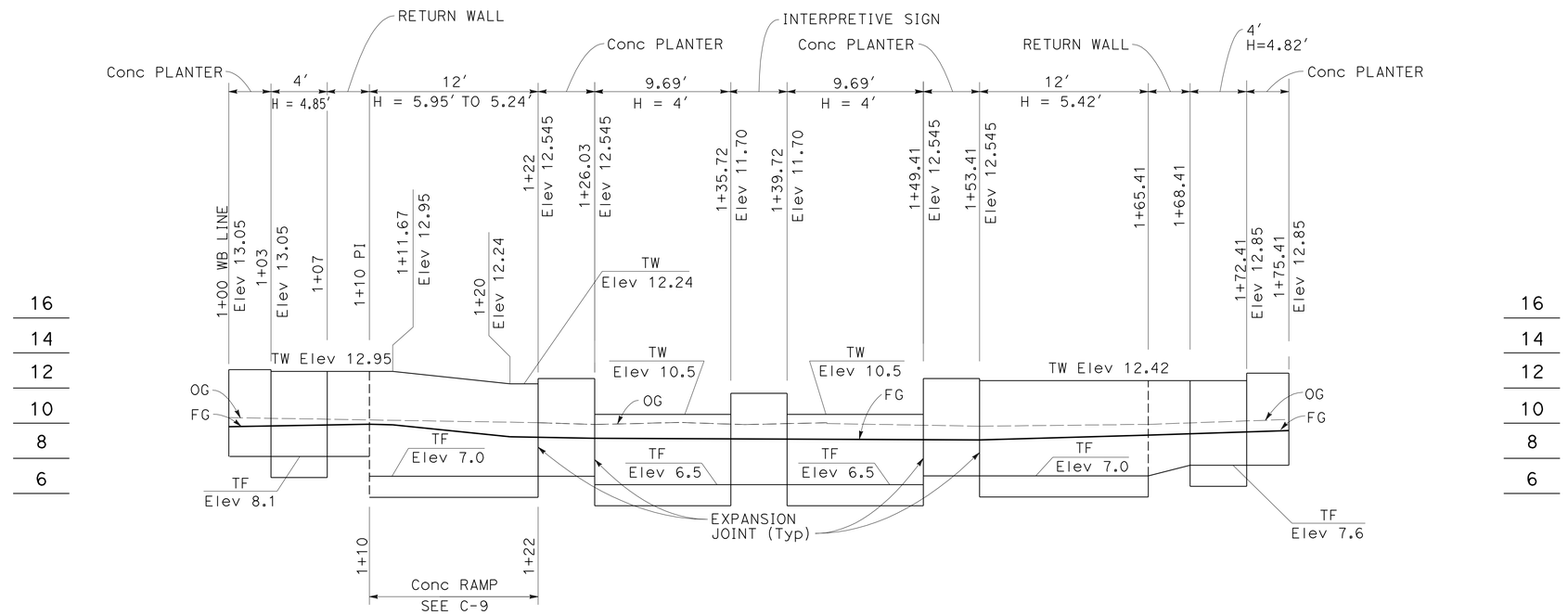

FOR NOTES, ABBREVIATIONS AND LEGEND, SEE SHEET R-1

RETAINING WALL DETAILS
WB LINE
PROFILE

SCALE: HORIZ 1" = 5'
VERT 1" = 4'

R-2

CALCULATED-DESIGNED BY	NIEN TRINH
CHECKED BY	MICHAEL T. NGUYEN
FUNCTIONAL SUPERVISOR	MICHAEL T. NGUYEN
REVISED BY	NT
DATE REVISED	4/6/10

STATE OF CALIFORNIA - DEPARTMENT OF TRANSPORTATION
Caltrans
DESIGN

LAST REVISION 06-10-10 | DATE PLOTTED => 25-JUN-2010 | TIME PLOTTED => 16:59

Dist	COUNTY	ROUTE	POST MILES TOTAL PROJECT	SHEET No.	TOTAL SHEETS
04	SF	80	4.9/5.9	55	127

REGISTERED CIVIL ENGINEER 4-15-10 DATE

6-21-10
PLANS APPROVAL DATE

REGISTERED PROFESSIONAL ENGINEER Nien Trinh No. 67739 Exp. 6-30-11 CIVIL STATE OF CALIFORNIA

THE STATE OF CALIFORNIA OR ITS OFFICERS OR AGENTS SHALL NOT BE RESPONSIBLE FOR THE ACCURACY OR COMPLETENESS OF SCANNED COPIES OF THIS PLAN SHEET.

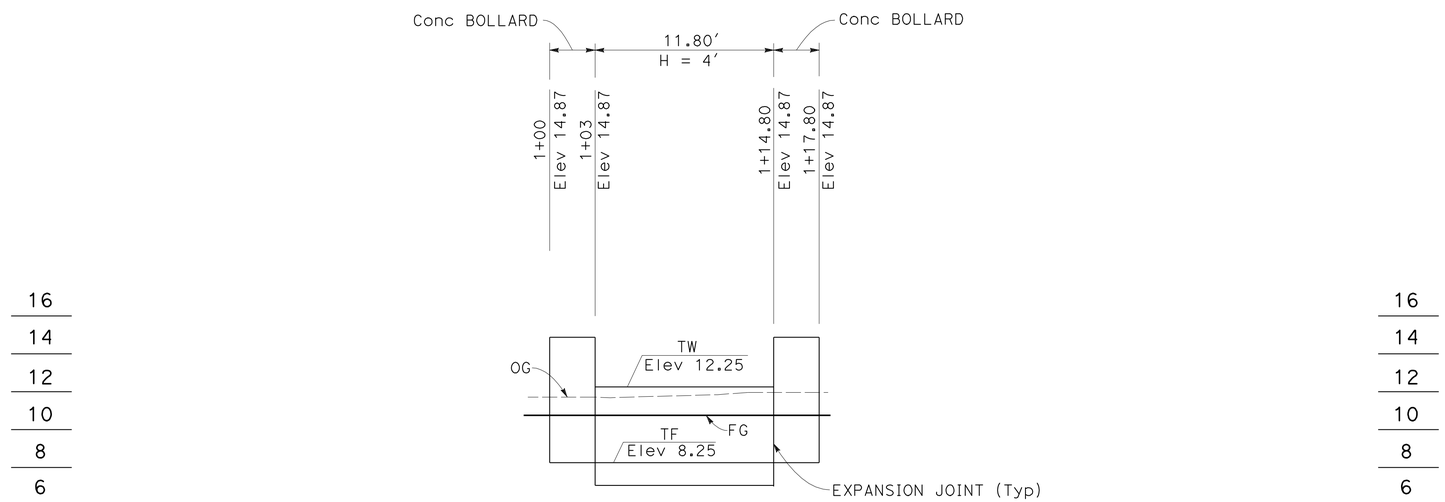

WC LINE

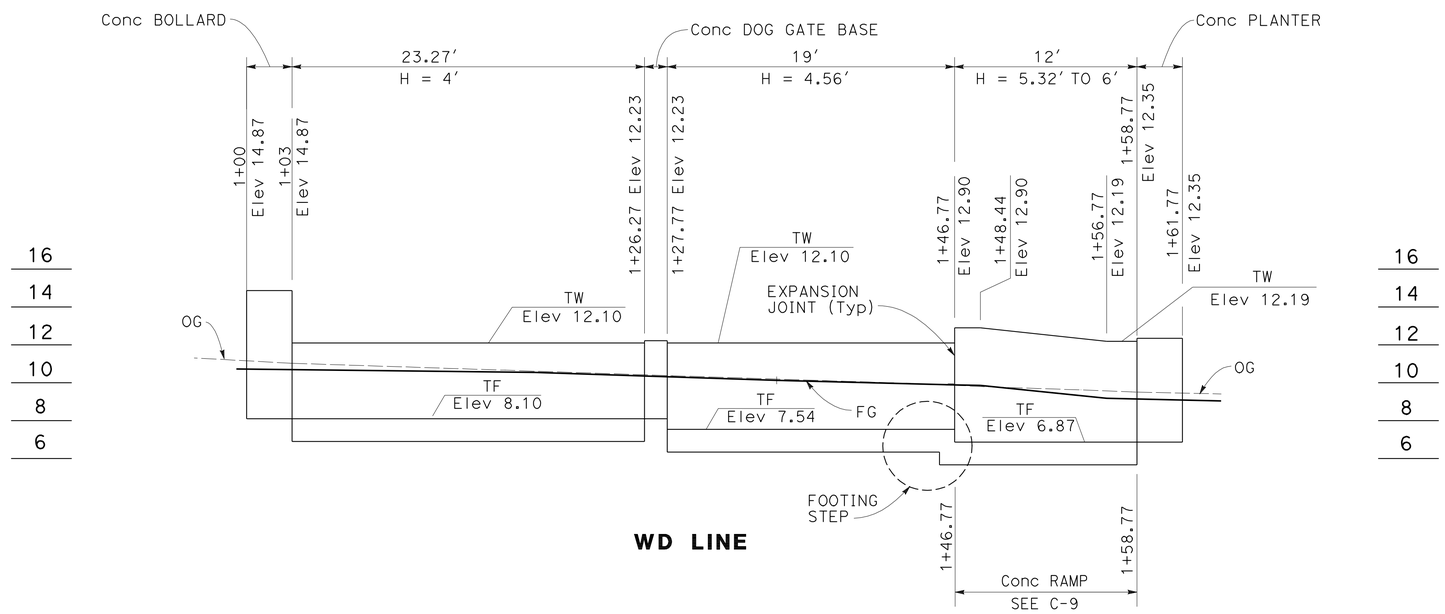

WD LINE

RETAINING WALL DETAILS
WC & WD LINE
PROFILE

SCALE: HORIZ 1" = 5′
VERT 1" = 4′

FOR NOTES, ABBREVIATIONS AND LEGEND, SEE SHEET R-1

R-3

NIEN TRINH	NT	CALCULATED-DESIGNED BY	
MICHAEL T. NGUYEN	4/6/10	CHECKED BY	
REVISED BY		FUNCTIONAL SUPERVISOR	
DATE REVISED		MICHAEL T. NGUYEN	

STATE OF CALIFORNIA - DEPARTMENT OF TRANSPORTATION
Caltrans
DESIGN

LAST REVISION 06-08-10 | DATE PLOTTED => 25-JUN-2010 | TIME PLOTTED => 16:59

Dist	COUNTY	ROUTE	POST MILES TOTAL PROJECT	SHEET No.	TOTAL SHEETS
04	SF	80	4.9/5.9	56	127

N. Trinh 4-15-10
REGISTERED CIVIL ENGINEER DATE

6-21-10
PLANS APPROVAL DATE

REGISTERED PROFESSIONAL ENGINEER
Nien Trinh
No. 67739
Exp. 6-30-11
CIVIL
STATE OF CALIFORNIA

THE STATE OF CALIFORNIA OR ITS OFFICERS OR AGENTS SHALL NOT BE RESPONSIBLE FOR THE ACCURACY OR COMPLETENESS OF SCANNED COPIES OF THIS PLAN SHEET.

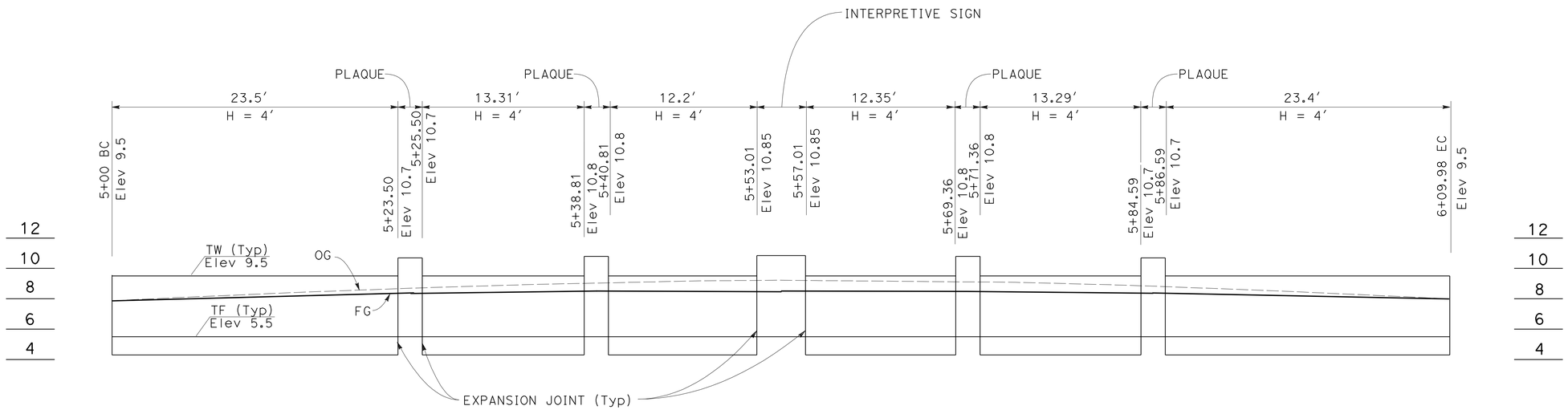

RETAINING WALL DETAILS
WE LINE
PROFILE

SCALE: HORIZ 1" = 5′
VERT 1" = 4′

FOR NOTES, ABBREVIATIONS AND LEGEND, SEE SHEET R-1

R-4

CALCULATED-DESIGNED BY	NIEN TRINH	REVISED BY	NT
CHECKED BY	MICHAEL T. NGUYEN	DATE REVISED	4/6/10
FUNCTIONAL SUPERVISOR	MICHAEL T. NGUYEN		

STATE OF CALIFORNIA - DEPARTMENT OF TRANSPORTATION
Caltrans®
DESIGN

LAST REVISION 04-07-10
DATE PLOTTED => 25-JUN-2010
TIME PLOTTED => 19:33

Dist	COUNTY	ROUTE	POST MILES TOTAL PROJECT	SHEET No.	TOTAL SHEETS
04	SF	80	4.9/5.9	57	127

REGISTERED CIVIL ENGINEER — DATE 4-15-10

PLANS APPROVAL DATE 6-21-10

REGISTERED PROFESSIONAL ENGINEER — Nien Trinh — No. 67739 — Exp 6-30-11 — CIVIL — STATE OF CALIFORNIA

THE STATE OF CALIFORNIA OR ITS OFFICERS OR AGENTS SHALL NOT BE RESPONSIBLE FOR THE ACCURACY OR COMPLETENESS OF SCANNED COPIES OF THIS PLAN SHEET.

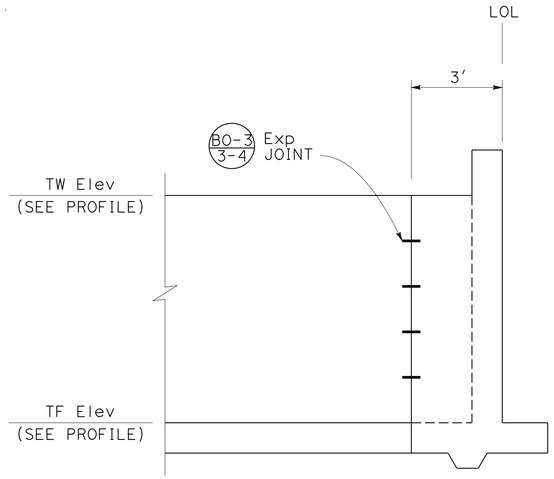

SECTION A-A

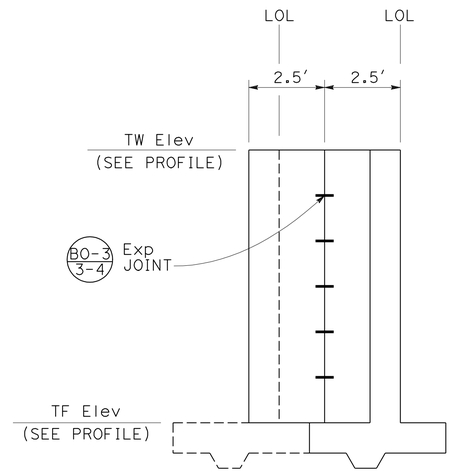

SECTION B-B

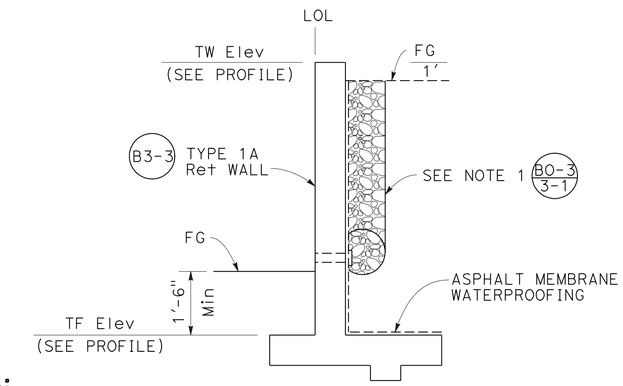

NOTES:

1. PLACE WEEPHOLES AT WA LINE 1+77 AND 2+15, PER SHEET D-1.
2. LOL (LAYOUT LINE) IS EQUIVALENT TO WA, WB, WC, WD AND WE LINES.
3. FOR DETAILS NOT SHOWN, SEE Std PLAN BO-3, B3-3 AND B3-8.
4. FOR WALL LAYOUT, SEE SHEET C-2.

RETAINING WALL (A)

USE FOR ALL RETAINING WALLS, EXCEPT
WA 1+11.41 TO 1+53.91 AND
WB 1+53.41 TO 1+65.41

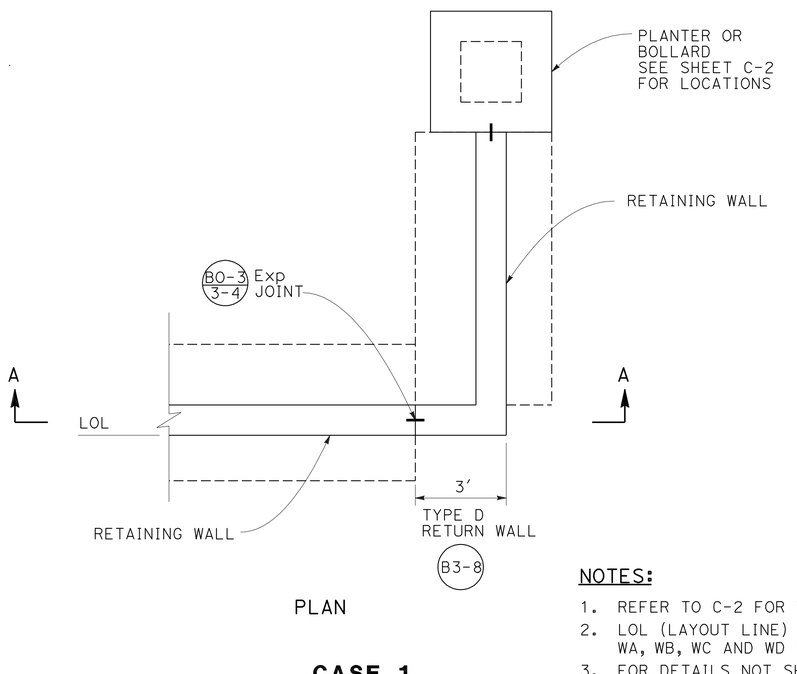

PLAN

CASE 1

WA 1+53.91 TO 1+56.91
WA 2+37 TO 2+40
WA 2+54.50 TO 2+57.50
WB 1+07 TO 1+10
WB 1+65.41 TO 1+68.41

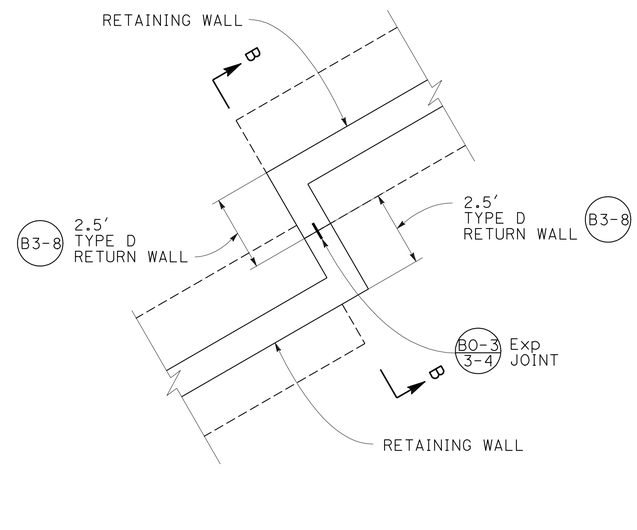

PLAN

CASE 2

WA 1+70.20 TO 1+74.18
WA 2+19.73 TO 2+23.71

NOTES:

1. REFER TO C-2 FOR WALL LAYOUT.
2. LOL (LAYOUT LINE) IS EQUIVALENT TO WA, WB, WC AND WD LINES.
3. FOR DETAILS NOT SHOWN, SEE Std PLAN BO-3 AND B3-8.

RETURN WALLS

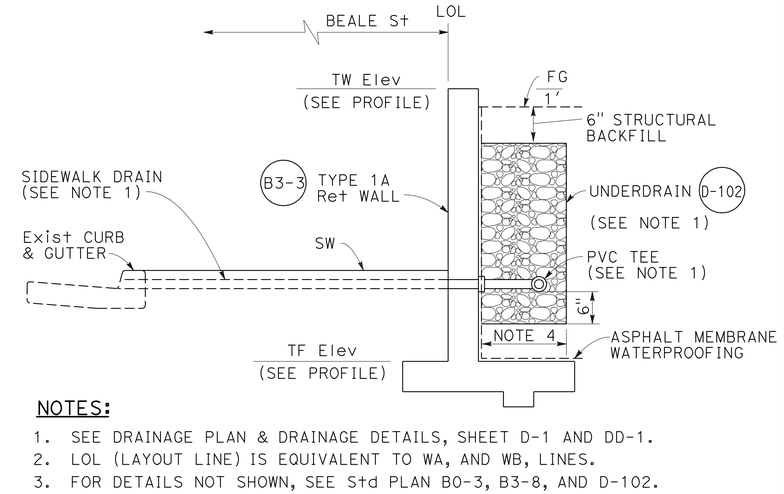

NOTES:

1. SEE DRAINAGE PLAN & DRAINAGE DETAILS, SHEET D-1 AND DD-1.
2. LOL (LAYOUT LINE) IS EQUIVALENT TO WA, AND WB, LINES.
3. FOR DETAILS NOT SHOWN, SEE Std PLAN BO-3, B3-8, AND D-102.
4. 16" WIDTH MINIMUM, BUT WHEN ADJACENT TO RETAINING WALL USE 28" WIDTH.
5. FOR WALL LAYOUT, SEE SHEET C-2.

RETAINING WALL (B)

USE ONLY FOR RETAINING WALLS
WA 1+11.41 TO 1+53.91 AND
WB 1+53.41 TO 1+65.41

FOR NOTES, ABBREVIATIONS AND LEGEND, SEE SHEET R-1

RETAINING WALL DETAILS

NO SCALE

R-5

REVISED BY	DATE REVISED
NT	4/6/10

NIEN TRINH — CALCULATED-DESIGNED BY
MICHAEL T. NGUYEN — CHECKED BY
MICHAEL T. NGUYEN — FUNCTIONAL SUPERVISOR

STATE OF CALIFORNIA - DEPARTMENT OF TRANSPORTATION
Caltrans®
DESIGN

LAST REVISION 04-17-10 | DATE PLOTTED => 25-JUN-2010 | TIME PLOTTED => 17:23

Dist	COUNTY	ROUTE	POST MILES TOTAL PROJECT	SHEET No.	TOTAL SHEETS
04	SF	80	4.9/5.9	58	127

LICENSED LANDSCAPE ARCHITECT

6-21-10
PLANS APPROVAL DATE

LICENSED LANDSCAPE ARCHITECT — KIMBERLY WHITE No. 4893 — Signature — Renewal Date 2-28-12 — Date 4-15-10 — STATE OF CALIFORNIA

THE STATE OF CALIFORNIA OR ITS OFFICERS OR AGENTS SHALL NOT BE RESPONSIBLE FOR THE ACCURACY OR COMPLETENESS OF SCANNED COPIES OF THIS PLAN SHEET.

ABBREVIATIONS:

CF —— CUBIC FEET
LB —— POUND

PLANT LIST AND PLANTING SPECIFICATIONS

PLANT GROUP	PLANT No.	SYMBOL	BOTANICAL NAME	COMMON NAME	SIZE	QUANTITY EACH	HOLE SIZE (INCH) Dia	HOLE SIZE (INCH) DEPTH	BASIN TYPE	IRON SULFATE	SOIL AMEND ①	COMMERCIAL FERTILIZER ① PLANTING	COMMERCIAL FERTILIZER ① PLT ESTB	BASIN MULCH	STAKING	PLANTING LIMITS MINIMUM DISTANCE (Ft) FROM TRVD WAY	Pvmt	FENCE	WALL	PAVED DITCH	EARTH DITCH	ON CENTER (Ft)	REMARKS
A	1		ARCTOSTAPHYLOS BAKERI 'LOUIS EDMUNDS'	MANZANITA 'LOUIS EDMUNDS'	No. 1	167	18	12	I	--	0.5 CF	1 Oz	1 Oz	1 CF	--	--	5	5	5	5	6	④	SHRUB
	2		ARCTOSTAPHYLOS 'EMERALD CARPET'	MANZANITA 'EMERALD CARPET'	No. 1	29	18	12	I	--	0.5 CF	1 Oz	1 Oz	1 CF	--	--	4	4	4	4	5	5	GROUNDCOVER
	3		BACCHARIS PILULARIS 'TWIN PEAKS II'	COYOTE BRUSH 'TWIN PEAKS'	No. 1	247	18	12	I	--	0.5 CF	1 Oz	1 Oz	1 CF	--	--	4	4	4	4	6	6	GROUNDCOVER
	4		CEANOTHUS GRISEUS HORIZONTALIS 'YANKEE POINT'	NCN	No. 1	432	18	12	I	--	0.5 CF	1 Oz	1 Oz	1 CF	--	--	5	5	5	5	5	8	GROUNDCOVER
	5		CHAMAEROPS HUMILIS 'CERIFERA'	FAN PALM 'CERIFERA'	No. 1	7	18	12	I	--	0.5 CF	1 Oz	1 Oz	1 CF	--	--	6	6	6	6	7	④	PALM
	6		FREMONTODENDRON 'KEN TAYLOR'	FLANNEL BUSH 'KEN TAYLOR'	No. 1	21	18	12	I	--	0.5 CF	1 Oz	1 Oz	1 CF	--	--	5	5	5	5	6	④	SHRUB
	7		GREVILLEA AUSTRAFLORA 'FANFARE'	GREVILLIA 'FANFARE'	No. 1	303	18	12	I	--	0.5 CF	1 Oz	1 Oz	1 CF	--	--	7	8	8	8	8	14	SHRUB
	8		GREVILLEA JUNIPERINA 'MOLONGLO'	JUNIPER GREVILLEA	No. 1	106	18	12	I	--	0.5 CF	1 Oz	1 Oz	1 CF	--	--	6	6	6	6	7	12	SHRUB
	9		PASSIFLORA JAMESONII 'CORAL SEAS'	NCN	No. 1	108	18	12	I	--	0.5 CF	1 Oz	1 Oz	1 CF	--	--	--	--	--	--	--	8	VINE
	10		PHORIUM 'DAZZLER'	NEW ZEALAND FLAX 'DAZZLER'	No. 1	611	18	12	I ⑤	--	0.5 CF	1 Oz	1 Oz	1 CF ⑤	--	--	3	4	4	3	4	4	PERENNIAL
	11		POLYSTICHUM MUNITUM	WESTERN SWORD FERN	No. 1	182	18	12	I	--	0.5 CF	1 Oz	1 Oz	1 CF	--	--	3	4	4	3	4	4	PERENNIAL
	12		RHAMNUS CALIFORNICA 'MOUND SAN BRUNO'	COFFEEBERRY 'SAN BRUNO MOUND'	No. 1	503	18	12	I	--	0.5 CF	1 Oz	1 Oz	1 CF	--	--	6	5	5	5	6	④	SHRUB
	13		RIBES VIBURNIFOLIUM	CATALINA PERFUME	No. 1	287	18	12	I	--	0.5 CF	1 Oz	1 Oz	1 CF	--	--	4	4	4	4	4	5	SHRUB
	14		ROMNEYA COULTERI	MATILIJA POPPY	No. 1	28	18	12	I	--	0.5 CF	1 Oz	1 Oz	1 CF	--	--	5	5	5	5	6	8	SHRUB
	15		SALVIA LEUCOPHYLLA 'PT. SAL SPREADER'	PURPLE SAGE 'PT. SAL SPREADER'	No. 1	20	18	12	I	--	0.5 CF	1 Oz	1 Oz	1 CF	--	--	4	4	4	4	5	④	SHRUB
B	16		RHAMNUS ALATERNUS 'VARIEGATA'	VARIEGATED ITALIAN BUCKTHORN	No. 5	66	24	18	I	--	1.5 CF	1 Oz	1 Oz	1 CF	--	--	4	3.5	3.5	4	4	8	SHRUB

APPLICABLE WHEN CIRCLED:

① - QUANTITIES SHOWN ARE "PER PLANT" UNLESS SHOWN AS SQFT OR SQYD APPLICATION RATES.
2 - SUFFICIENT TO RECEIVE ROOT BALL.
3 - DOES NOT APPLY TO MULCH AREAS.
④ - AS SHOWN ON PLANS.
⑤ - UNLESS OTHERWISE SHOWN ON PLANS.
⑥ - SEE DETAIL.
7 - SEE SPECIAL PROVISIONS.

LIMITS OF SPREAD MULCH (TYPE 1) SHOWN DIAGRAMMATICALLY. PLACE MULCH WITHIN ASSOCIATED PLANTING AREAS.

LIMITS OF SPREAD MULCH (TYPE 2) SHOWN DIAGRAMMATICALLY. PLACE MULCH WITHIN ASSOCIATED PLANTING AREAS.

LIMITS OF TOPSOIL SHOWN DIAGRAMMATICALLY. PLACE TOPSOIL WITHIN ASSOCIATED PLANTING AREAS.

GRAVEL MULCH AREA

ROCK BLANKET AREA

EXISTING PLANTS TO BE MAINTAINED

ROOT BARRIER

NOTE:

UNDERLINED PORTIONS OF BOTANICAL NAME INDICATE ABBREVIATIONS USED ON PLANTING PLANS.

PLANT LIST
PL-1

REVISED BY	DATE REVISED
KW	4/15/10

CALCULATED-DESIGNED BY: KIMBERLY WHITE
CHECKED BY: CHRIS ELSE
SENIOR LANDSCAPE ARCHITECT: LORENA WONG

STATE OF CALIFORNIA - DEPARTMENT OF TRANSPORTATION
Caltrans® LANDSCAPE ARCHITECTURE

LAST REVISION 06-12-10 | DATE PLOTTED => 25-JUN-2010 | TIME PLOTTED => 17:23

Dist	COUNTY	ROUTE	POST MILES TOTAL PROJECT	SHEET No.	TOTAL SHEETS
04	SF	80	4.9/5.9	59	127

LICENSED LANDSCAPE ARCHITECT

6-21-10
PLANS APPROVAL DATE

LICENSED LANDSCAPE ARCHITECT
KIMBERLY WHITE No. 4893
Signature
2-28-12
Renewal Date
4-15-10
Date
STATE OF CALIFORNIA

THE STATE OF CALIFORNIA OR ITS OFFICERS OR AGENTS SHALL NOT BE RESPONSIBLE FOR THE ACCURACY OR COMPLETENESS OF SCANNED COPIES OF THIS PLAN SHEET.

PLANT LIST AND PLANTING SPECIFICATIONS

PLANT GROUP	PLANT No.	SYMBOL	BOTANICAL NAME	COMMON NAME	SIZE	QUANTITY EACH	HOLE SIZE (INCH) Dia	HOLE SIZE (INCH) DEPTH	BASIN TYPE	IRON SULFATE	SOIL AMEND ①	COMMERCIAL FERTILIZER ① PLANTING	COMMERCIAL FERTILIZER ① PLT ESTB	BASIN MULCH	STAKING	PLANTING LIMITS MINIMUM DISTANCE (Ft) FROM TRVD WAY	Pvmt	FENCE	WALL	PAVED DITCH	EARTH DITCH	ON CENTER (Ft)	REMARKS
U	17		GINKO BILOBA 'SARATOGA'	GINKO 'SARATOGA'	No. 15	37	36	24	I	--	4 CF	10 Oz	10 Oz	2 CF	⑥	30	6	10	12	12	15	④	TREE
	18		MAGNOLIA GRANDIFLORA 'RUSSET'	MAGNOLIA 'RUSSET'	No. 15	29	36	24	I	--	4 CF	10 Oz	10 Oz	2 CF	⑥	30	5	15	15	15	15	④	TREE
	19		PLATYNUS ACERIFOLIA 'YARWOOD'	YARWOOD SYCAMORE	No. 15	33	36	24	I	--	4 CF	10 Oz	10 Oz	2 CF	⑥	30	6	12	12	10	12	④	TREE
	20		PYRUS CALLERYANNA 'ARISTOCRAT'	ORNAMENTAL PEAR 'ARISTOCRAT'	No. 15	15	36	24	I	--	4 CF	10 Oz	10 Oz	2 CF	⑥	30	4	8	8	10	10	④	TREE

REVISED BY: KW — DATE REVISED: 4/15/10

KIMBERLY WHITE — CHRIS ELSE

CALCULATED-DESIGNED BY — CHECKED BY

SENIOR LANDSCAPE ARCHITECT: LORENA WONG

STATE OF CALIFORNIA - DEPARTMENT OF TRANSPORTATION
Caltrans® LANDSCAPE ARCHITECTURE

PLANT LIST
PL-2

LAST REVISION 04-12-16
DATE PLOTTED => 25-JUN-2010
TIME PLOTTED => 17:00

Dist	COUNTY	ROUTE	POST MILES TOTAL PROJECT	SHEET No.	TOTAL SHEETS
04	SF	80	4.9/5.9	60	127

LICENSED LANDSCAPE ARCHITECT

6-21-10
PLANS APPROVAL DATE

LICENSED LANDSCAPE ARCHITECT
KIMBERLY WHITE No. 4843
Signature
2-28-12
Renewal Date
4-15-10
Date
STATE OF CALIFORNIA

THE STATE OF CALIFORNIA OR ITS OFFICERS OR AGENTS SHALL NOT BE RESPONSIBLE FOR THE ACCURACY OR COMPLETENESS OF SCANNED COPIES OF THIS PLAN SHEET.

NOTE:

FOR ACCURATE RIGHT OF WAY AND ACCESS DATA, CONTACT RIGHT OF WAY ENGINEERING AT THE DISTRICT OFFICE.

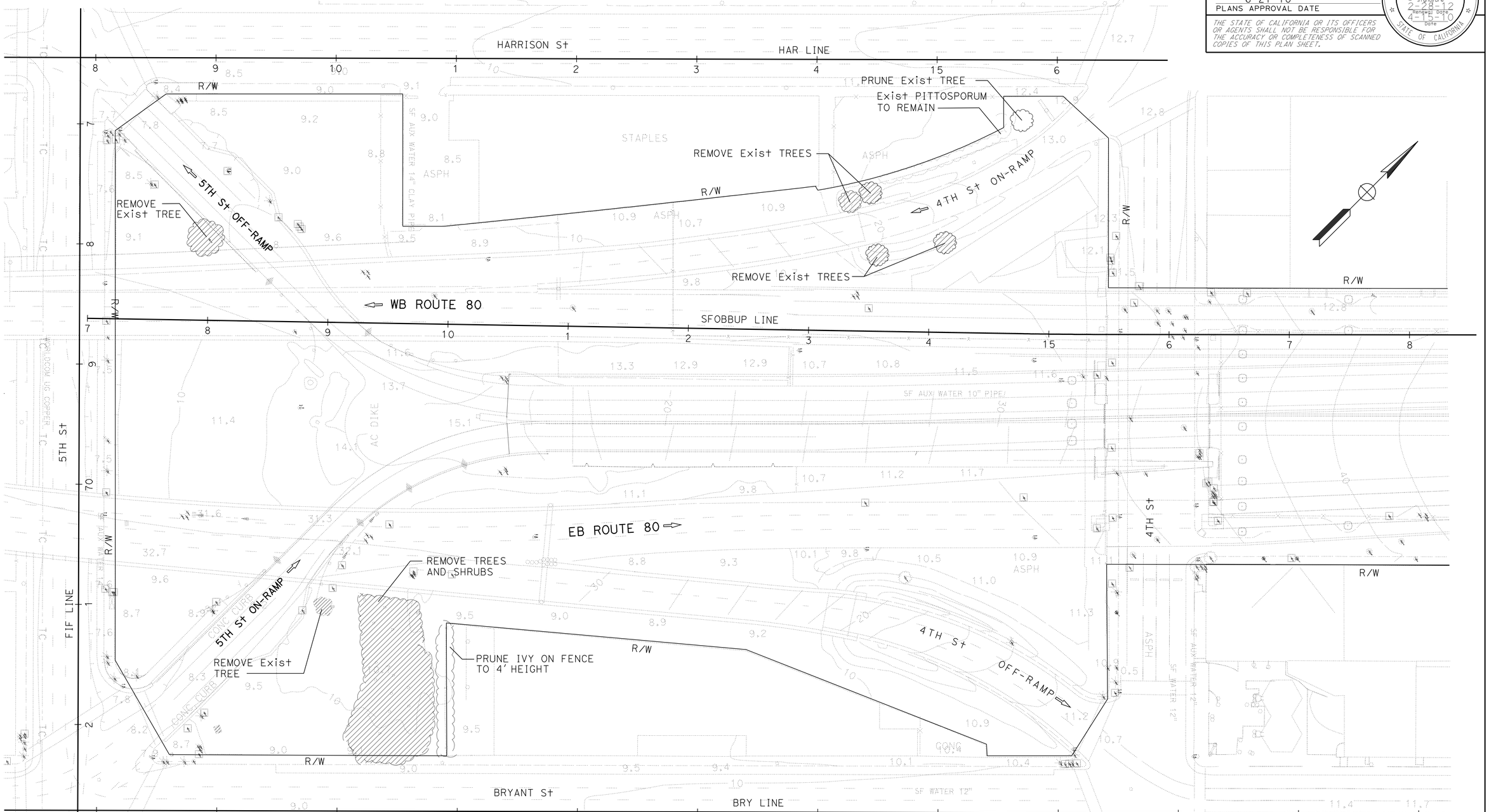

PLANT REMOVAL PLAN

SCALE: 1" = 40'

PR-1

REVISED BY	KW
DATE REVISED	4/15/10
CALCULATED-DESIGNED BY	KIMBERLY WHITE
CHECKED BY	CHRIS ELSE
SENIOR LANDSCAPE ARCHITECT	LORENA WONG

STATE OF CALIFORNIA - DEPARTMENT OF TRANSPORTATION
Caltrans® LANDSCAPE ARCHITECTURE

LAST REVISION 02-12-10 | DATE PLOTTED => 28-JUN-2010 | TIME PLOTTED => 08:02

Dist	COUNTY	ROUTE	POST MILES TOTAL PROJECT	SHEET No.	TOTAL SHEETS
04	SF	80	4.9/5.9	61	127

LICENSED LANDSCAPE ARCHITECT

6-21-10
PLANS APPROVAL DATE

LICENSED LANDSCAPE ARCHITECT
KIMBERLY WHITE NO. 4893
Signature
2-28-12
Renewal Date
4-15-10
Date
STATE OF CALIFORNIA

THE STATE OF CALIFORNIA OR ITS OFFICERS OR AGENTS SHALL NOT BE RESPONSIBLE FOR THE ACCURACY OR COMPLETENESS OF SCANNED COPIES OF THIS PLAN SHEET.

NOTE:

FOR ACCURATE RIGHT OF WAY AND ACCESS DATA,
CONTACT RIGHT OF WAY ENGINEERING AT THE DISTRICT OFFICE.

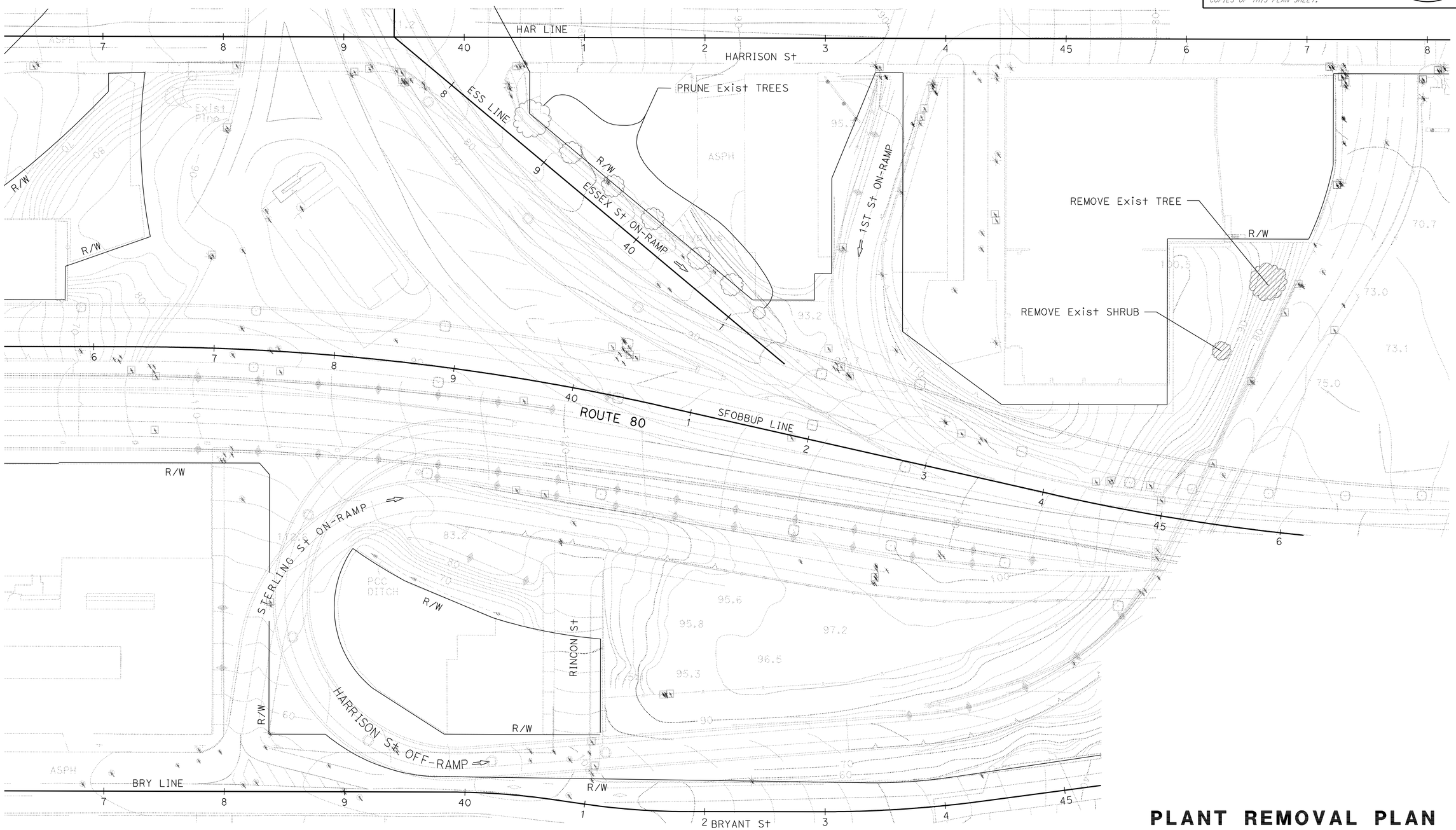

PLANT REMOVAL PLAN

SCALE: 1" = 40'

PR-2

STATE OF CALIFORNIA - DEPARTMENT OF TRANSPORTATION
Caltrans® LANDSCAPE ARCHITECTURE

SENIOR LANDSCAPE ARCHITECT: LORENA WONG
CALCULATED-DESIGNED BY: KIMBERLY WHITE
CHECKED BY: CHRIS ELSE
REVISED BY: KW
DATE REVISED: 4/15/10

LAST REVISION 06-12-10
DATE PLOTTED => 28-JUN-2010
TIME PLOTTED => 08:02

Dist	COUNTY	ROUTE	POST MILES TOTAL PROJECT	SHEET No.	TOTAL SHEETS
04	SF	80	4.9/5.9	62	127

LICENSED LANDSCAPE ARCHITECT

6-21-10
PLANS APPROVAL DATE

THE STATE OF CALIFORNIA OR ITS OFFICERS OR AGENTS SHALL NOT BE RESPONSIBLE FOR THE ACCURACY OR COMPLETENESS OF SCANNED COPIES OF THIS PLAN SHEET.

LICENSED LANDSCAPE ARCHITECT KIMBERLY WHITE No. 4843 Signature 2-28-12 Renewal Date 4-15-10 Date STATE OF CALIFORNIA

NOTE:

FOR ACCURATE RIGHT OF WAY AND ACCESS DATA, CONTACT RIGHT OF WAY ENGINEERING AT THE DISTRICT OFFICE.

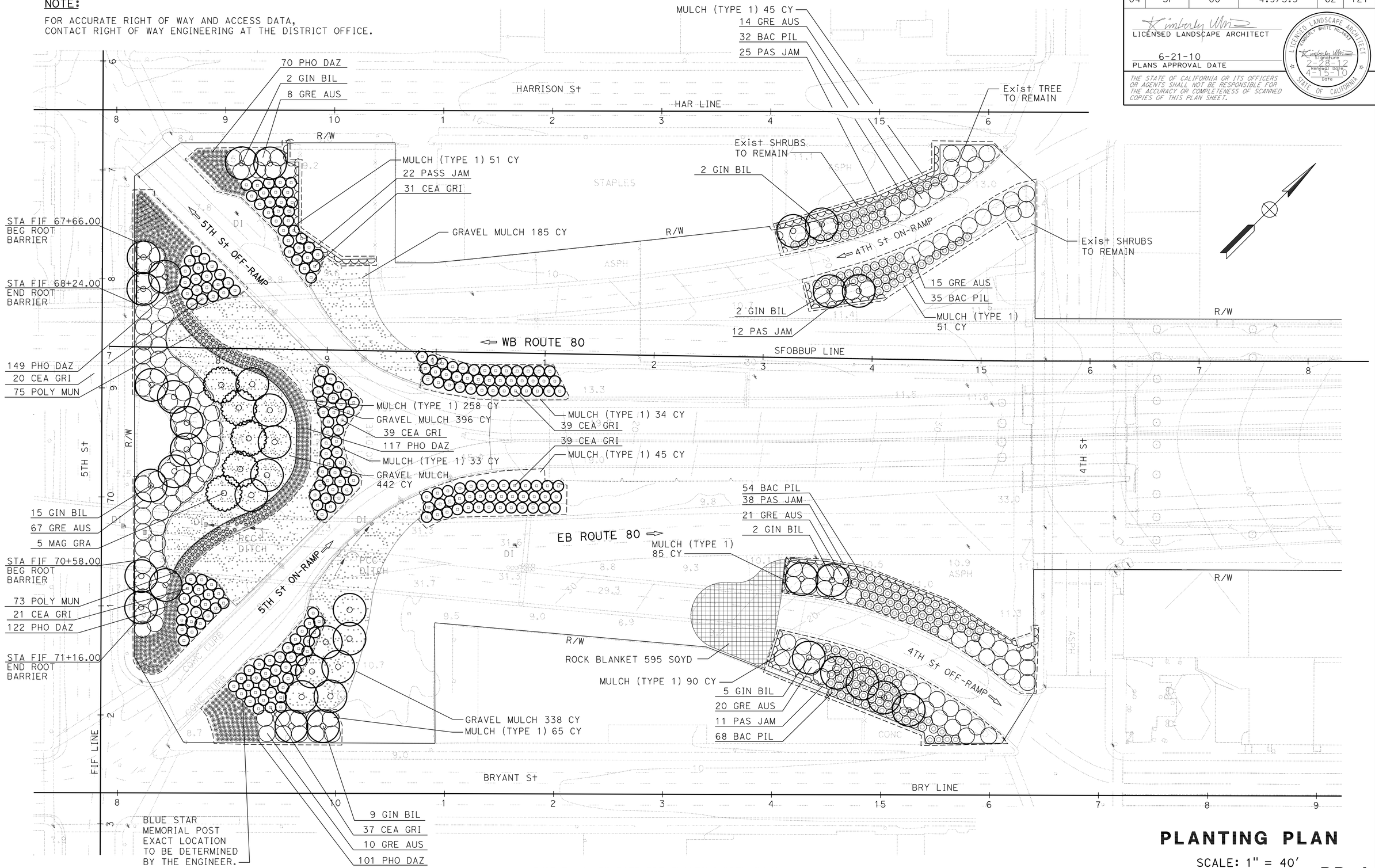

THIS PLAN ACCURATE FOR PLANTING WORK ONLY

PLANTING PLAN

SCALE: 1" = 40'

PP-1

REVISED BY	DATE REVISED
KW	4/15/10

KIMBERLY WHITE — CHRIS ELSE

CALCULATED-DESIGNED BY — CHECKED BY

SENIOR LANDSCAPE ARCHITECT — LORENA WONG

STATE OF CALIFORNIA - DEPARTMENT OF TRANSPORTATION

Caltrans® LANDSCAPE ARCHITECTURE

LAST REVISION 06-12-10 — DATE PLOTTED => 28-JUN-2010 TIME PLOTTED => 08:03

Dist	COUNTY	ROUTE	POST MILES TOTAL PROJECT	SHEET No.	TOTAL SHEETS
04	SF	80	4.9/5.9	63	127

LICENSED LANDSCAPE ARCHITECT

6-21-10
PLANS APPROVAL DATE

THE STATE OF CALIFORNIA OR ITS OFFICERS OR AGENTS SHALL NOT BE RESPONSIBLE FOR THE ACCURACY OR COMPLETENESS OF SCANNED COPIES OF THIS PLAN SHEET.

LICENSED LANDSCAPE ARCHITECT
KIMBERLY WHITE No. 4943
Signature
2-28-12
Renewal Date
4-15-10
Date
STATE OF CALIFORNIA

NOTE:

FOR ACCURATE RIGHT OF WAY AND ACCESS DATA,
CONTACT RIGHT OF WAY ENGINEERING AT THE DISTRICT OFFICE.

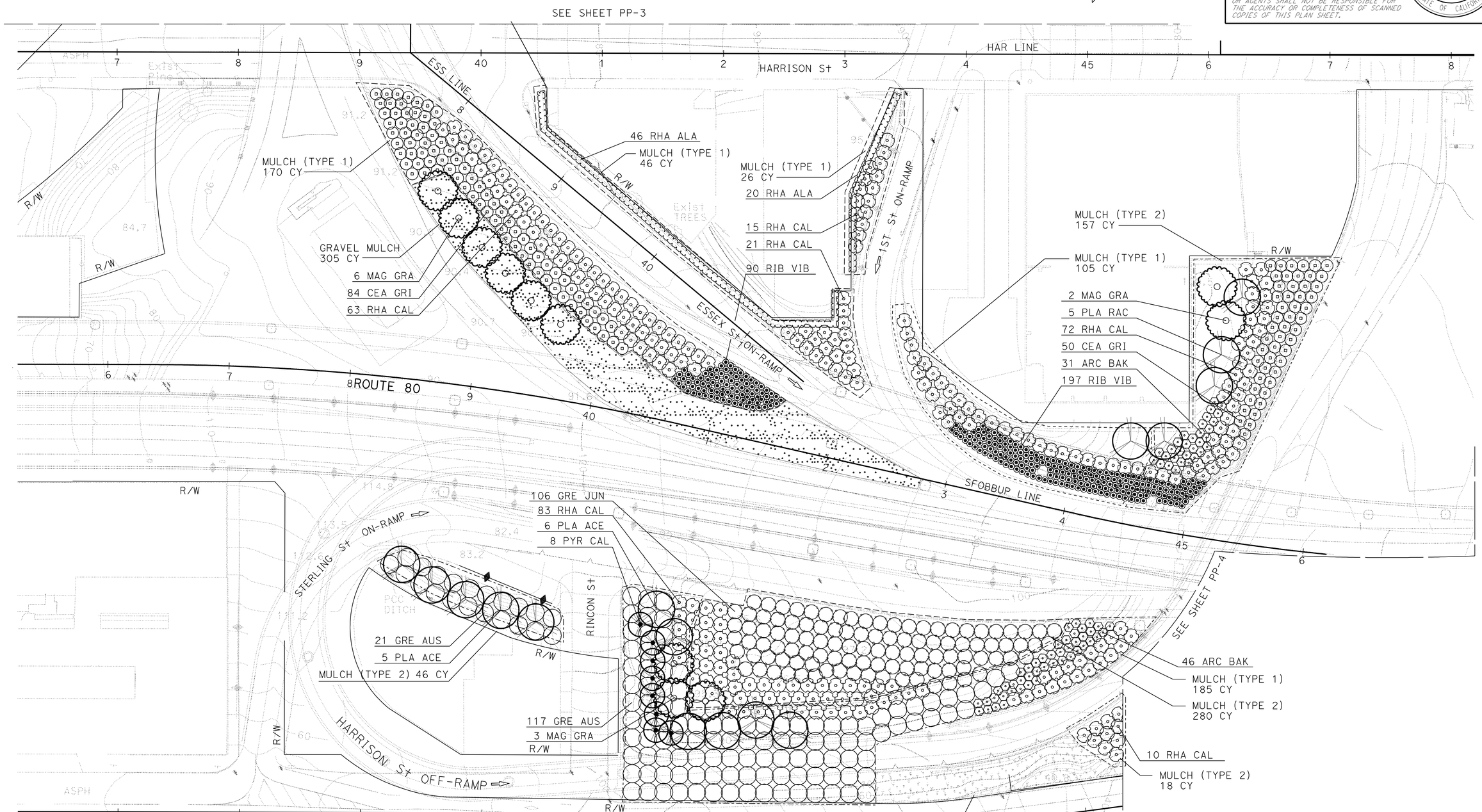

THIS PLAN ACCURATE FOR PLANTING WORK ONLY

PLANTING PLAN

SCALE: 1" = 40'

PP-2

REVISED BY	DATE REVISED
KW	4/15/10

KIMBERLY WHITE — CHRIS ELSE — CALCULATED-DESIGNED BY — CHECKED BY

SENIOR LANDSCAPE ARCHITECT — LORENA WONG

STATE OF CALIFORNIA - DEPARTMENT OF TRANSPORTATION
Caltrans® LANDSCAPE ARCHITECTURE

LAST REVISION 06-12-10 — DATE PLOTTED => 28-JUN-2010 — TIME PLOTTED => 08:03

Dist	COUNTY	ROUTE	POST MILES TOTAL PROJECT	SHEET No.	TOTAL SHEETS
04	SF	80	4.9/5.9	64	127

LICENSED LANDSCAPE ARCHITECT

6-21-10
PLANS APPROVAL DATE

THE STATE OF CALIFORNIA OR ITS OFFICERS OR AGENTS SHALL NOT BE RESPONSIBLE FOR THE ACCURACY OR COMPLETENESS OF SCANNED COPIES OF THIS PLAN SHEET.

LICENSED LANDSCAPE ARCHITECT
KIMBERLY WHITE No. 4893
Signature
2-28-12
Renewal Date
4-15-10
Date
STATE OF CALIFORNIA

NOTE:

FOR ACCURATE RIGHT OF WAY AND ACCESS DATA, CONTACT RIGHT OF WAY ENGINEERING AT THE DISTRICT OFFICE.

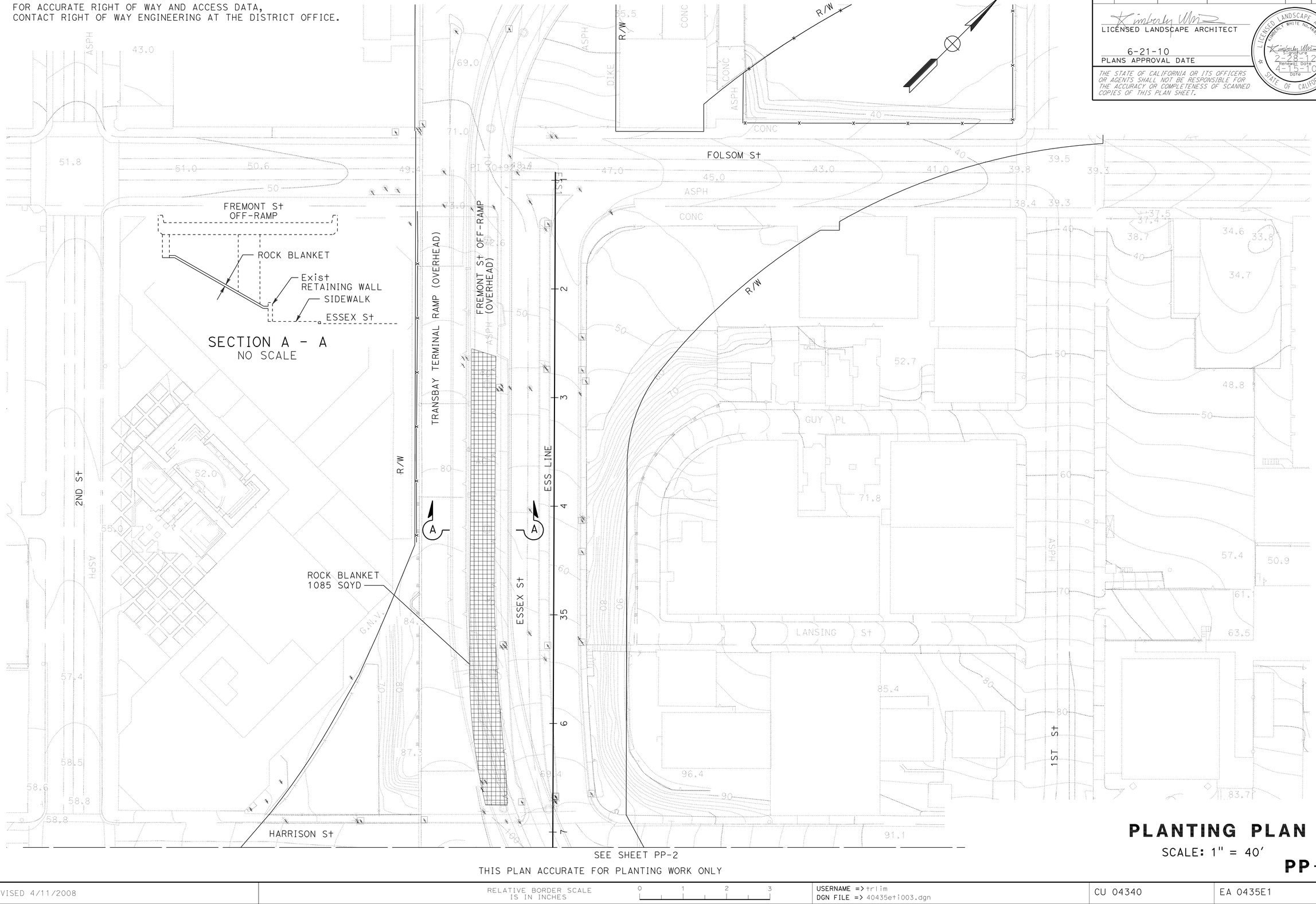

SEE SHEET PP-2

THIS PLAN ACCURATE FOR PLANTING WORK ONLY

PLANTING PLAN

SCALE: 1" = 40'

PP-3

STATE OF CALIFORNIA - DEPARTMENT OF TRANSPORTATION
Caltrans® LANDSCAPE ARCHITECTURE

SENIOR LANDSCAPE ARCHITECT: LORENA WONG
CALCULATED-DESIGNED BY: KIMBERLY WHITE
CHECKED BY: CHRIS ELSE
REVISED BY: KW
DATE REVISED: 4/15/10

LAST REVISION 06-12-10
DATE PLOTTED => 25-JUN-2010
TIME PLOTTED => 17:01

Dist	COUNTY	ROUTE	POST MILES TOTAL PROJECT	SHEET No.	TOTAL SHEETS
04	SF	80	4.9/5.9	65	127

LICENSED LANDSCAPE ARCHITECT

6-21-10
PLANS APPROVAL DATE

LICENSED LANDSCAPE ARCHITECT
KIMBERLY WHITE No. 4888
Signature
2-28-12
Renewal Date
4-15-10
Date
STATE OF CALIFORNIA

THE STATE OF CALIFORNIA OR ITS OFFICERS OR AGENTS SHALL NOT BE RESPONSIBLE FOR THE ACCURACY OR COMPLETENESS OF SCANNED COPIES OF THIS PLAN SHEET.

NOTE:

FOR ACCURATE RIGHT OF WAY AND ACCESS DATA, CONTACT RIGHT OF WAY ENGINEERING AT THE DISTRICT OFFICE.

PLANTING NOTES:

1. SEE LANDSCAPE DETAILS FOR EXACT LOCATIONS OF PET WASTE BAG DISPENSERS, WATER POSTS, AND BENCHES.
2. EXACT LOCATION OF TRASH RECEPTACLE TO BE DETERMINED BY THE ENGINEER.

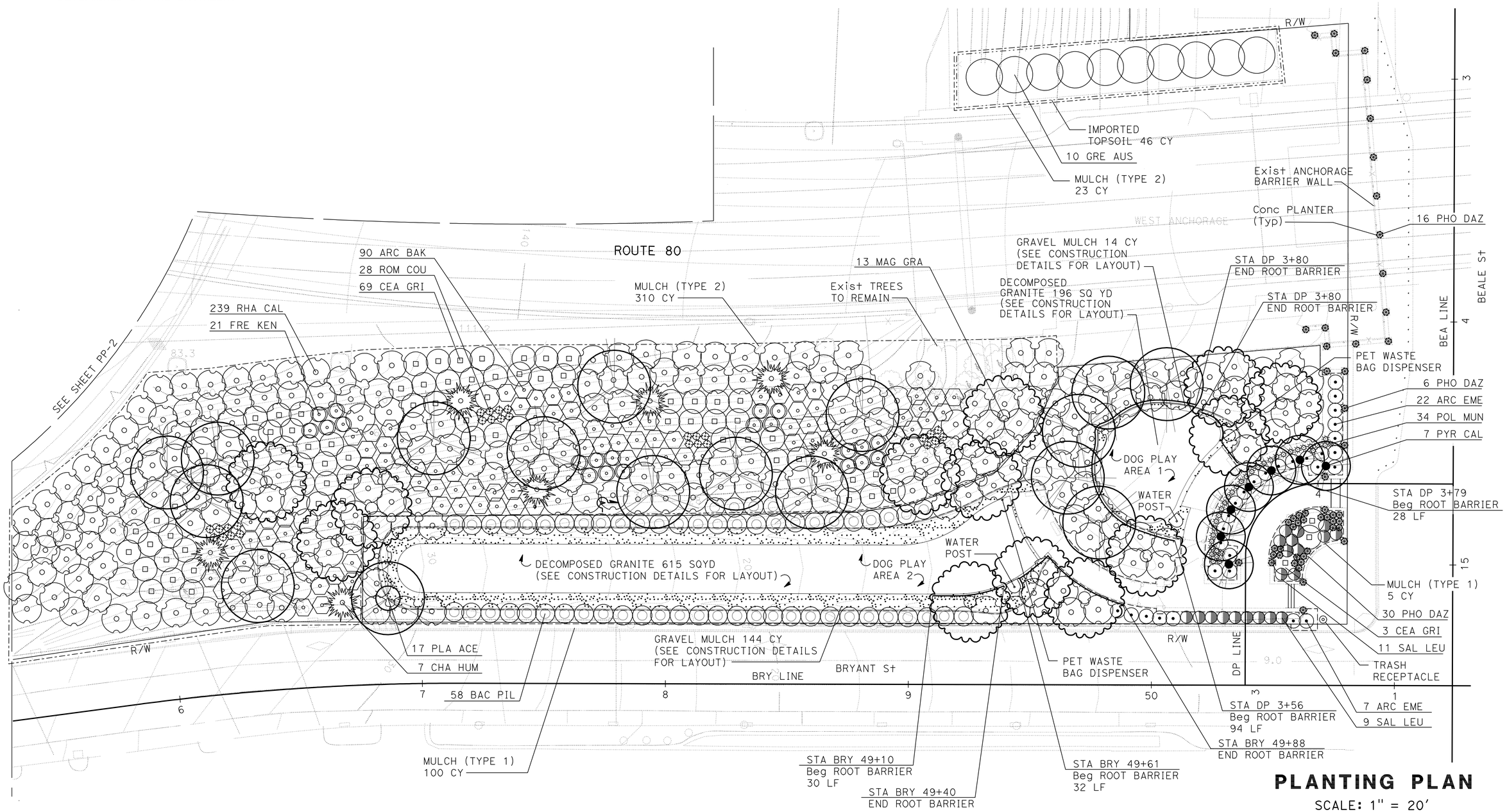

PLANTING PLAN

SCALE: 1" = 20'

THIS PLAN ACCURATE FOR PLANTING WORK ONLY

PP-4

REVISED BY	DATE REVISED
KW	4/15/10

CALCULATED-DESIGNED BY	CHECKED BY
KIMBERLY WHITE	CHRIS ELSE

SENIOR LANDSCAPE ARCHITECT: LORENA WONG

STATE OF CALIFORNIA - DEPARTMENT OF TRANSPORTATION
Caltrans® LANDSCAPE ARCHITECTURE

LAST REVISION 06-12-10
DATE PLOTTED => 28-JUN-2010
TIME PLOTTED => 14:06

NOTE:

FOR ACCURATE RIGHT OF WAY AND ACCESS DATA, CONTACT RIGHT OF WAY ENGINEERING AT THE DISTRICT OFFICE.

IRRIGATION NOTES:

1. PLASTIC PIPE (SUPPLY LINE) (MAIN) SHALL BE 2" (PR 200) UNLESS OTHERWISE SHOWN.
2. PLASTIC PIPE (SUPPLY LINE) (LATERAL) SHALL BE ¾" (PR 200) UNLESS OTHERWISE SHOWN.
3. PLASTIC PIPE (SUPPPLY LINE) (LATERAL) FOR SPRINKLER (TYPE C-2) SHALL BE SIZED IN CONFORMANCE WITH THE PLASTIC PIPE SIZING DETAIL.
4. SPRINKLER (TYPE C-2) SHALL BE LOCATED ON THE UPHILL SIDE OF THE PLANT BASIN WHEN LOCATED ON SLOPES.
5. GATE VALVES (GV) SHALL BE 2" UNLESS OTHERWISE SHOWN.
6. QUICK COUPLING VALVES (QCV) SHALL BE ¾" AND SHALL BE INSTALLED ON A SWING JOINT (TYPE I) WITH A SPRINKLER PROTECTOR (TYPE I).

Dist	COUNTY	ROUTE	POST MILES TOTAL PROJECT	SHEET No.	TOTAL SHEETS
04	SF	80	4.9/5.9	66	127

LICENSED LANDSCAPE ARCHITECT

6-21-10
PLANS APPROVAL DATE

LICENSED LANDSCAPE ARCHITECT KIMBERLY WHITE NO. 4945 Signature 2-28-12 Renewal Date 4-15-10 Date STATE OF CALIFORNIA

THE STATE OF CALIFORNIA OR ITS OFFICERS OR AGENTS SHALL NOT BE RESPONSIBLE FOR THE ACCURACY OR COMPLETENESS OF SCANNED COPIES OF THIS PLAN SHEET.

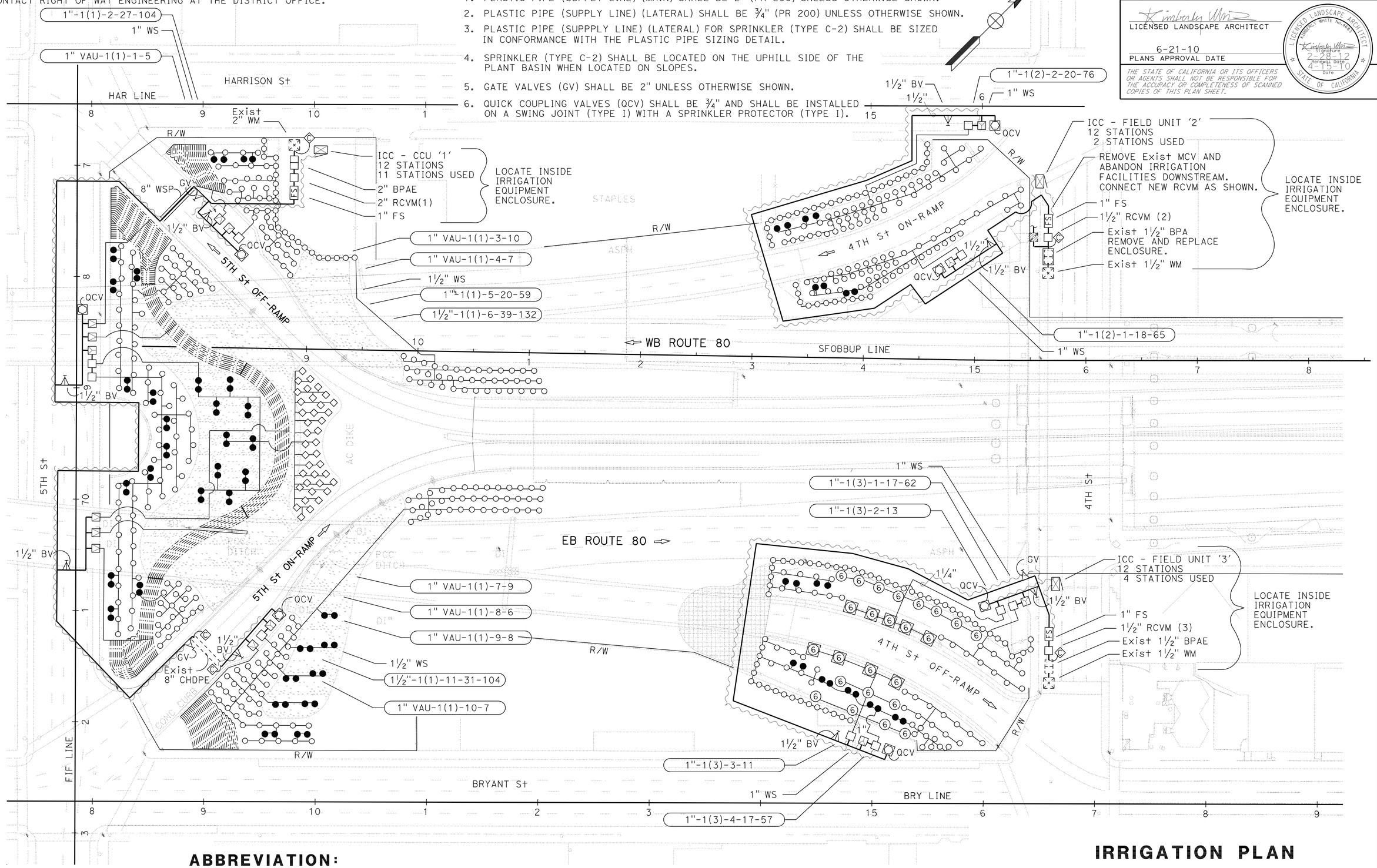

ABBREVIATION:

CCU COMMON COMMUNICATION UNIT

THIS PLAN ACCURATE FOR IRRIGATION WORK ONLY.

IRRIGATION PLAN

SCALE: 1" = 40'

IP-1

REVISED BY	DATE REVISED
KW	4/15/10

KIMBERLY WHITE — CHRIS ELSE

CALCULATED-DESIGNED BY — CHECKED BY

SENIOR LANDSCAPE ARCHITECT — LORENA WONG

STATE OF CALIFORNIA - DEPARTMENT OF TRANSPORTATION
Caltrans® LANDSCAPE ARCHITECTURE

LAST REVISION 06-12-10 — DATE PLOTTED => 28-JUN-2010 TIME PLOTTED => 07:50

Dist	COUNTY	ROUTE	POST MILES TOTAL PROJECT	SHEET No.	TOTAL SHEETS
04	SF	80	4.9/5.9	67	127

LICENSED LANDSCAPE ARCHITECT

6-21-10
PLANS APPROVAL DATE

LICENSED LANDSCAPE ARCHITECT
KIMBERLY WHITE No. 4843
Signature
2-28-12
Renewal Date
4-15-10
Date
STATE OF CALIFORNIA

THE STATE OF CALIFORNIA OR ITS OFFICERS OR AGENTS SHALL NOT BE RESPONSIBLE FOR THE ACCURACY OR COMPLETENESS OF SCANNED COPIES OF THIS PLAN SHEET.

NOTE:

FOR ACCURATE RIGHT OF WAY AND ACCESS DATA,
CONTACT RIGHT OF WAY ENGINEERING AT THE DISTRICT OFFICE.

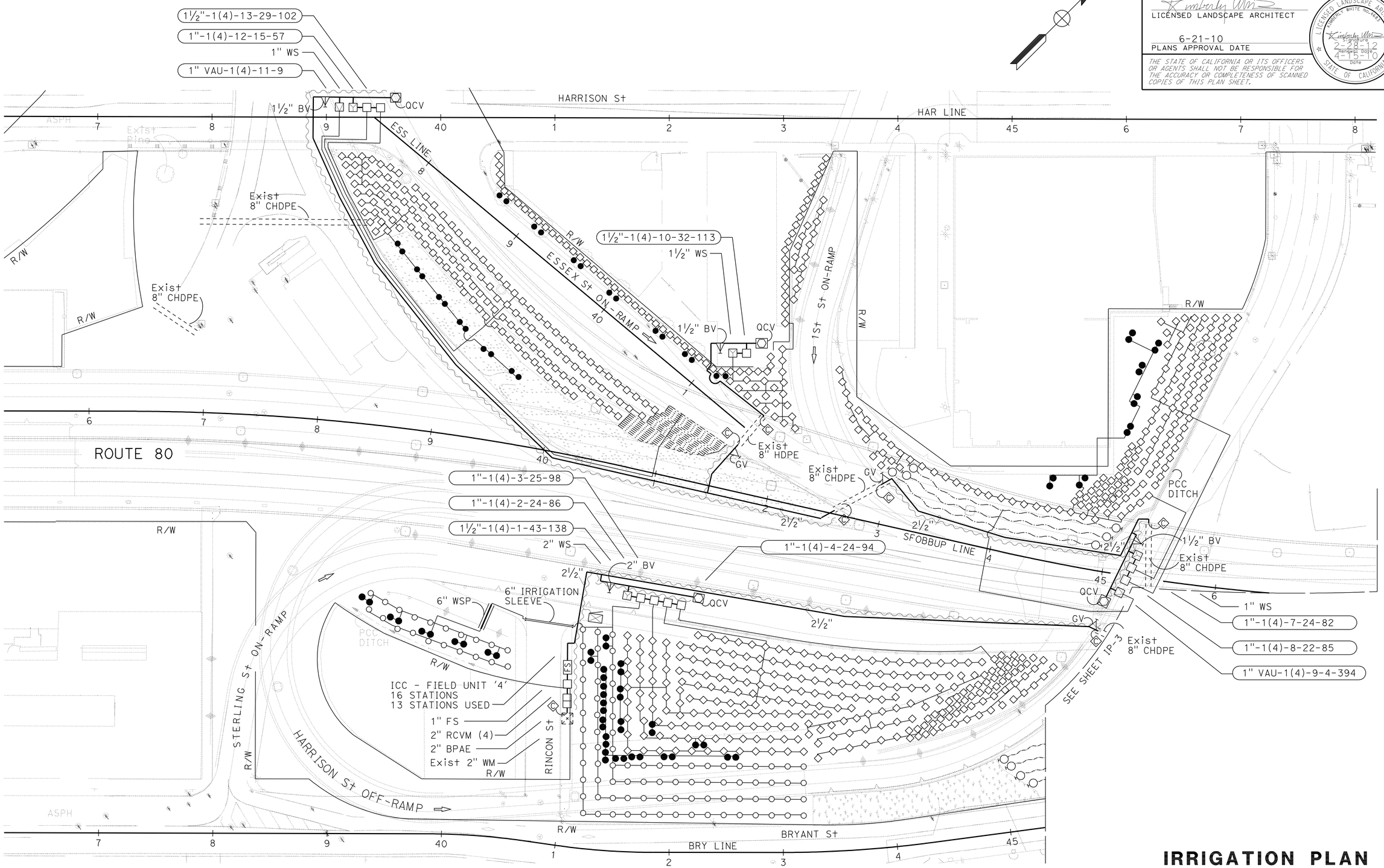

THIS PLAN ACCURATE FOR IRRIGATION WORK ONLY

IRRIGATION PLAN

SCALE: 1" = 40'

IP-2

STATE OF CALIFORNIA - DEPARTMENT OF TRANSPORTATION
Caltrans® LANDSCAPE ARCHITECTURE

SENIOR LANDSCAPE ARCHITECT: LORENA WONG
CALCULATED-DESIGNED BY: KIMBERLY WHITE
CHECKED BY: CHRIS ELSE
REVISED BY: KW
DATE REVISED: 4/15/10

LAST REVISION: 06-12-10
DATE PLOTTED => 25-JUN-2010
TIME PLOTTED => 18:23

Dist	COUNTY	ROUTE	POST MILES TOTAL PROJECT	SHEET No.	TOTAL SHEETS
04	SF	80	4.9/5.9	68	127

LICENSED LANDSCAPE ARCHITECT

6-21-10
PLANS APPROVAL DATE

LICENSED LANDSCAPE ARCHITECT — KIMBERLY WHITE No. 4983 — Signature — Renewal Date 2-28-12 — 4-15-10 Date — STATE OF CALIFORNIA

THE STATE OF CALIFORNIA OR ITS OFFICERS OR AGENTS SHALL NOT BE RESPONSIBLE FOR THE ACCURACY OR COMPLETENESS OF SCANNED COPIES OF THIS PLAN SHEET.

NOTE:

FOR ACCURATE RIGHT OF WAY AND ACCESS DATA,
CONTACT RIGHT OF WAY ENGINEERING AT THE DISTRICT OFFICE.

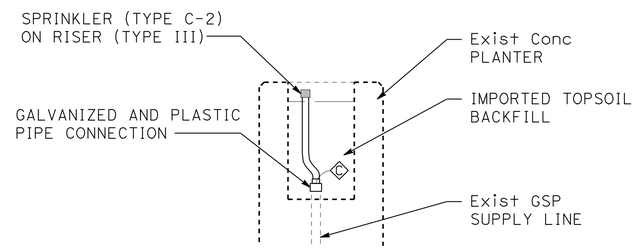

SECTION

SPRINKLER (TYPE C-2)
IN CONCRETE PLANTER
NO SCALE

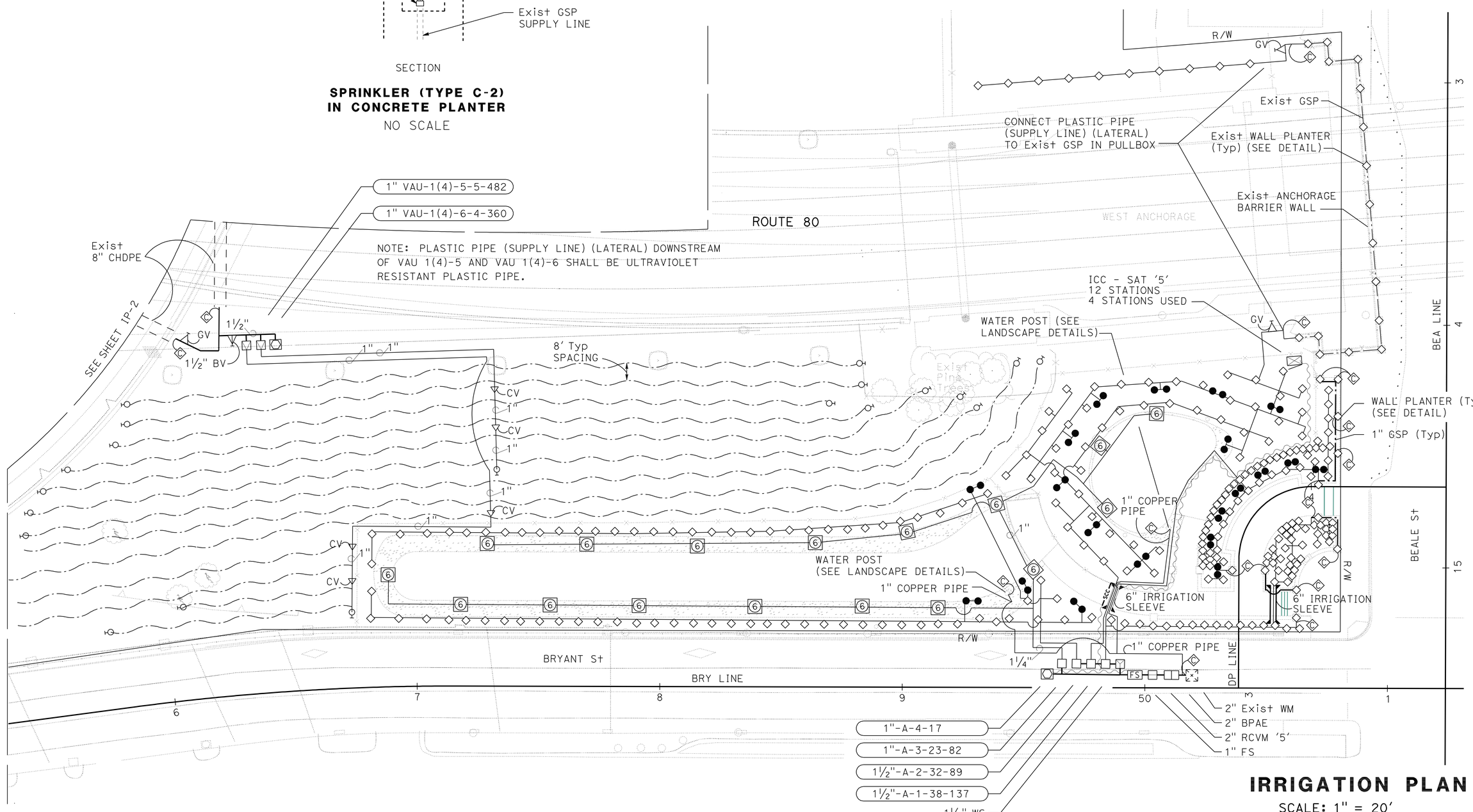

THIS PLAN ACCURATE FOR IRRIGATION WORK ONLY

IRRIGATION PLAN

SCALE: 1" = 20'

IP-3

STATE OF CALIFORNIA - DEPARTMENT OF TRANSPORTATION
Caltrans® LANDSCAPE ARCHITECTURE

SENIOR LANDSCAPE ARCHITECT: LORENA WONG

CALCULATED-DESIGNED BY: KIMBERLY WHITE
CHECKED BY: CHRIS ELSE

REVISED BY: KW
DATE REVISED: 4/15/10

LAST REVISION 06-14-10
DATE PLOTTED => 25-JUN-2010
TIME PLOTTED => 18:23

Dist	COUNTY	ROUTE	POST MILES TOTAL PROJECT	SHEET No.	TOTAL SHEETS
04	SF	80	4.9/5.9	69	127

LICENSED LANDSCAPE ARCHITECT

6-21-10
PLANS APPROVAL DATE

LICENSED LANDSCAPE ARCHITECT
KIMBERLY WHITE No. 4843
Signature
2-28-12
Renewal Date
4-15-10
Date
STATE OF CALIFORNIA

THE STATE OF CALIFORNIA OR ITS OFFICERS OR AGENTS SHALL NOT BE RESPONSIBLE FOR THE ACCURACY OR COMPLETENESS OF SCANNED COPIES OF THIS PLAN SHEET.

SPRINKLER SCHEDULE

SYMBOL	TYPE	DESCRIPTION	SPRAY PATTERN	OPERATING PRESSURE (PSI)	PRESSURE COMPENSATING	PLUS/MINUS 5% ② DISCHARGE GALLONS PER MINUTE (GPM)	DISCHARGE GALLONS PER HOUR (GPH)	RADIUS (Ft)	WIDTH x LENGTH (Ft)	MATERIAL	INLET CONNECTION (NPT INCH)	POSITIVE-LOCKING Adj ARC STOP	BACKSPLASH PREVENTER	DIFFUSER PIN	DISTANCE CONTROL FLAP	Adj DISCHARGE	RISER TYPE	RISER MATERIAL PLASTIC	RISER MATERIAL GALVANIZED	RISER SIZE (IPS INCH)	RISER HEIGHT (INCH)	RISER FLOW SHUTOFF DEVICE	⑤ SWING JOINT (TYPE)	RISER SUPPORT	SPRINKLER PROTECTOR (TYPE)	REMARKS
⑥	A-6	GEAR DRIVEN POP-UP	P	30-70	-	1.0	-	20-47	-	PL	¾"	-	-	-	-	X	VI	X	-	-	-	-	-	-	I	12" POP-UP ⑥
⌑	C-2	FLOOD BUBBLER	-	20-90	X	0.25	-	-	-	PL	½"	-	-	-	-	-	I	X	-	½"	-	-	I	-	-	-
○	C-2 Mod	FLOOD BUBBLER	-	20-90	X	0.25	-	-	-	PL	½"	-	-	-	-	-	I	X	-	½"	-	-	I	-	-	-
●	C-2 Mod	FLOOD BUBBLER	-	20-90	X	0.50	-	-	-	PL	½"	-	-	-	-	-	I	X	-	½"	-	-	I	-	-	-
	D-1	SINGLE OUTLET EMITTER	-	7-50	X	-	0.5/ 1.0	-	-	PL	½"	-	-	-	-	-	-	-	-	-	-	-	-	-	-	CONTINUOUS FLUSHING, 120 MICRON SCREEN ⑥⑦
	D-3	INLINE EMITTER	-	7-50	X	-	0.6	-	-	PL	½"	-	-	-	-	-	-	-	-	-	-	-	-	-	-	18-20" SPACING, 120 MICRON SCREEN

X IN BOX DENOTES REQUIREMENT

APPLICABLE WHEN CIRCLED BELOW:

1 - SEE SPECIAL PROVISIONS.
② - IF A PRESSURE COMPENSATING DEVICE IS SPECIFIED, THE DISCHARGE AND RADII SHOWN REFLECT ITS USE.
3 - ARC STOP SHALL BE FITTED WITH A NUT AND BOLT.
4 - VINYL-COATED CAST IRON HOUSING.
⑤ - SWING JOINTS REQUIRED ADJACENT TO SHOULDERS, CURBS, SIDEWALKS, AND DIKES.
⑥ - BUILT-IN CHECK VALVE.
⑦ - SEE DETAIL FOR NUMBER OF EMITTERS PER PLANT.

LANDSCAPE DETAILS

LD-1

REVISED BY KW
DATE REVISED 4/15/10
KIMBERLY WHITE
CHRIS ELSE
CALCULATED-DESIGNED BY
CHECKED BY
SENIOR LANDSCAPE ARCHITECT LORENA WONG
STATE OF CALIFORNIA - DEPARTMENT OF TRANSPORTATION
Caltrans® LANDSCAPE ARCHITECTURE

Dist	COUNTY	ROUTE	POST MILES TOTAL PROJECT	SHEET No.	TOTAL SHEETS
04	SF	80	4.9/5.9	70	127

LICENSED LANDSCAPE ARCHITECT

6-21-10
PLANS APPROVAL DATE

LICENSED LANDSCAPE ARCHITECT — KIMBERLY WHITE No. 4893 — Signature — Renewal Date 2-28-12 — 4-15-10 Date — STATE OF CALIFORNIA

THE STATE OF CALIFORNIA OR ITS OFFICERS OR AGENTS SHALL NOT BE RESPONSIBLE FOR THE ACCURACY OR COMPLETENESS OF SCANNED COPIES OF THIS PLAN SHEET.

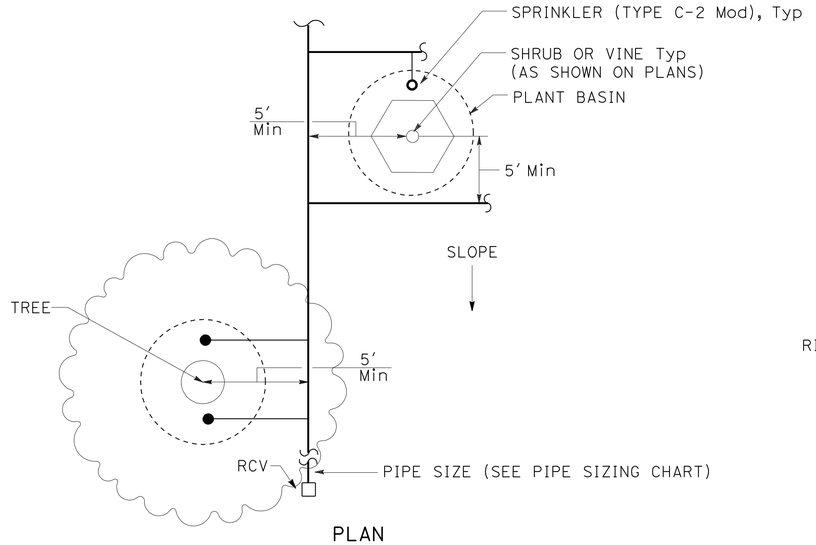

PLAN

SPRINKLER (TYPE C-2 MODIFIED)

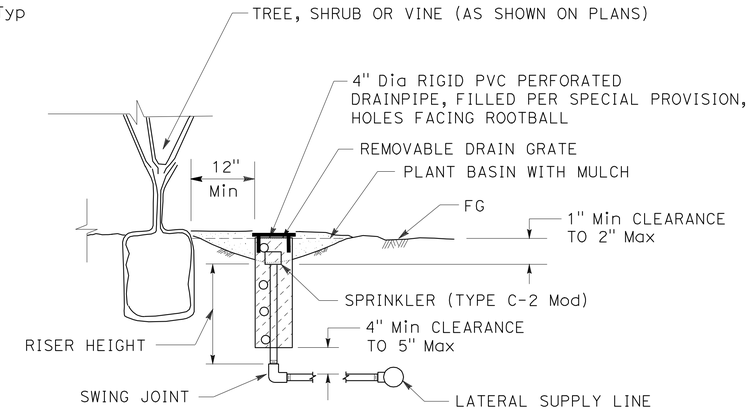

NOTE:

INSTALL SPRINKLER (TYPE C-2 Mod) ON UPHILL SIDE OF PLANT WHEN ON SLOPE.

SECTION

SPRINKLER (TYPE C-2 MODIFIED)

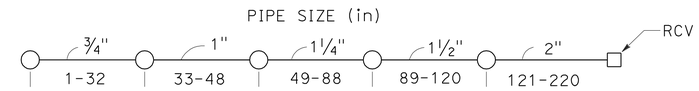

PIPE SIZING CHART
SPRINKLER (TYPE C-2)

NOTE: SPRINKLER (TYPE C-2 Mod) WITH A DISCHARGE RATE OF 0.5 GPM SHALL BE COUNTED AS TWO SPRINKLERS.

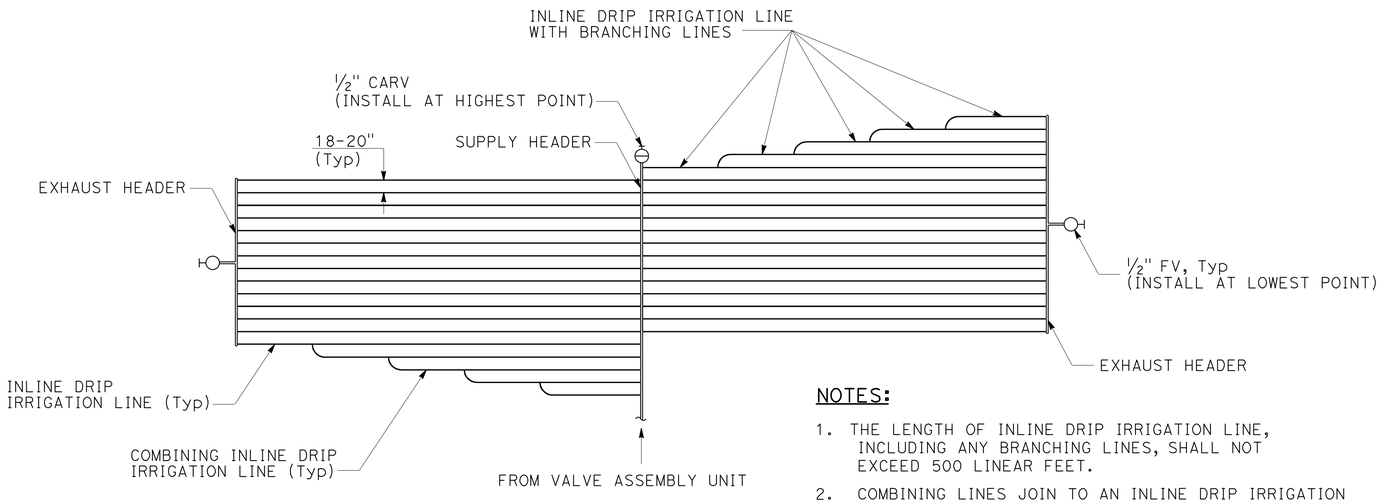

SCHEMATIC PLAN

NOTES:

1. THE LENGTH OF INLINE DRIP IRRIGATION LINE, INCLUDING ANY BRANCHING LINES, SHALL NOT EXCEED 500 LINEAR FEET.
2. COMBINING LINES JOIN TO AN INLINE DRIP IRRIGATION LINE TO CONNECT TO AN EXHAUST HEADER. BRANCHING LINES JOIN TO AN INLINE DRIP IRRIGATION LINE TO CONNECT TO THE SUPPLY HEADER.

SPRINKLER (TYPE D-3)
SUBSURFACE INLINE DRIP IRRIGATION

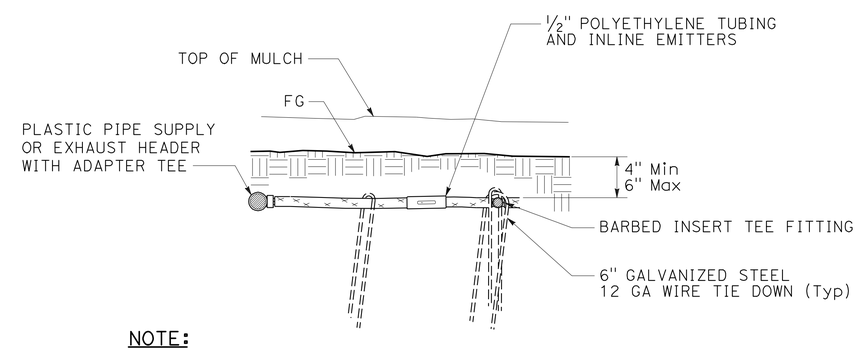

NOTE:

PLACE ONE WIRE TIE EVERY 5 FEET FOR STRAIGHT LENGTHS. PLACE TWO WIRE TIES, CROSSED OVER ONE ANOTHER, AT EVERY CHANGE IN DIRECTION AND AT FITTINGS.

SECTION

SPRINKLER (TYPE D-3)

LANDSCAPE DETAILS

NO SCALE

LD-2

REVISED BY	DATE REVISED
KW	4/15/10

CALCULATED-DESIGNED BY	CHECKED BY
KIMBERLY WHITE	CHRIS ELSE

SENIOR LANDSCAPE ARCHITECT: LORENA WONG

STATE OF CALIFORNIA - DEPARTMENT OF TRANSPORTATION
Caltrans® LANDSCAPE ARCHITECTURE

LAST REVISION 06-14-10 — DATE PLOTTED => 25-JUN-2010 — TIME PLOTTED => 18:23

Dist	COUNTY	ROUTE	POST MILES TOTAL PROJECT	SHEET No.	TOTAL SHEETS
04	SF	80	4.9/5.9	71	127

LICENSED LANDSCAPE ARCHITECT

6-21-10
PLANS APPROVAL DATE

LICENSED LANDSCAPE ARCHITECT
KIMBERLY WHITE No. 4893
Signature
2-28-12
Renewal Date
4-15-10
Date
STATE OF CALIFORNIA

THE STATE OF CALIFORNIA OR ITS OFFICERS OR AGENTS SHALL NOT BE RESPONSIBLE FOR THE ACCURACY OR COMPLETENESS OF SCANNED COPIES OF THIS PLAN SHEET.

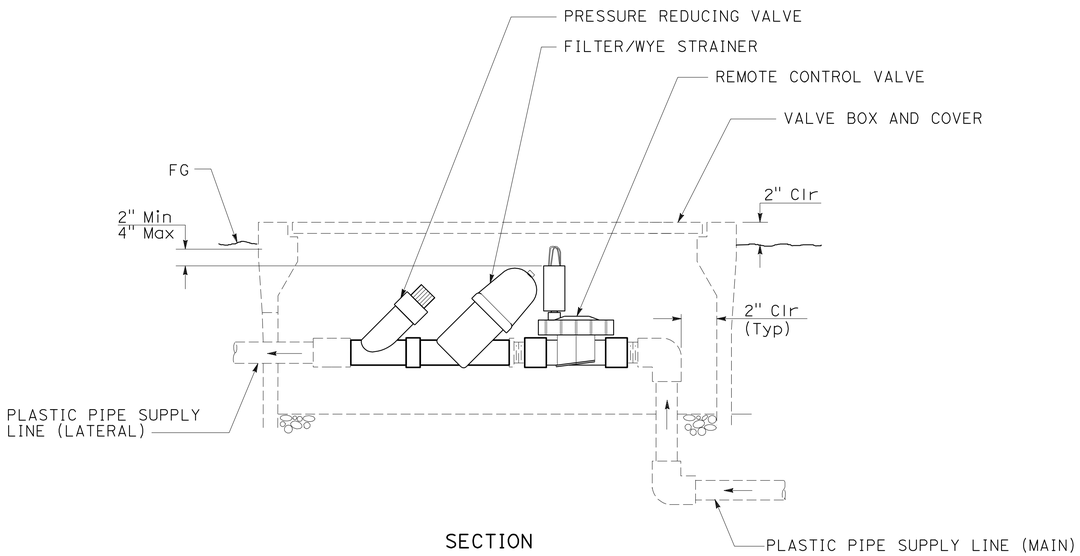

SECTION

VALVE ASSEMBLY UNIT (VAU)

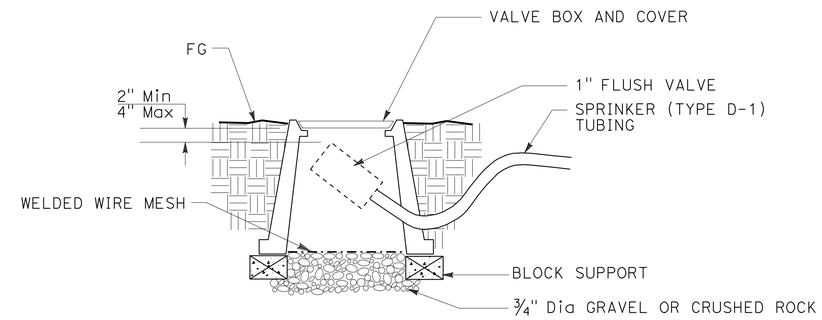

NOTE: ALLOW ADDITIONAL LENGTH OF TUBING INSIDE VALVE BOX IN ORDER TO DIRECT FLUSHED WATER OUTSIDE VALVE BOX

SECTION

FLUSH VALVE AT END OF DRIPLINE

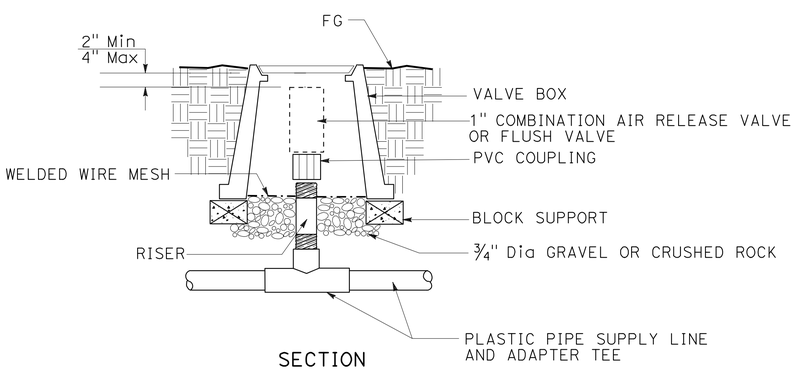

SECTION

COMBINATION AIR RELEASE VALVE OR FLUSH VALVE ON PLASTIC PIPE MANIFOLD

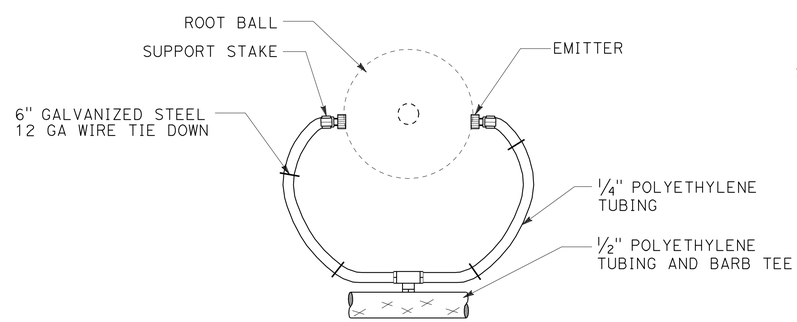

NOTE:

PLACE TWO 0.50 GPH EMITTER FOR No. 1 AND No. 5 SIZE CONTAINER PLANTS.
PLACE TWO 1.00 GPH EMITTER FOR No. 15 SIZE CONTAINER PLANTS.

PLAN

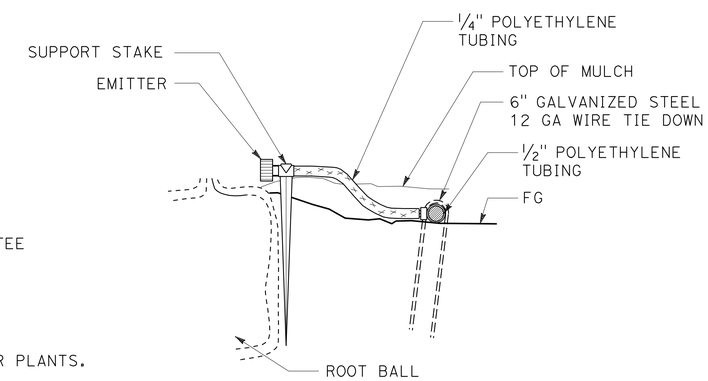

SECTION

SPRINKLER (TYPE D-1) AT PLANT BASIN

LANDSCAPE DETAILS

NO SCALE

LD-3

STATE OF CALIFORNIA - DEPARTMENT OF TRANSPORTATION
Caltrans
LANDSCAPE ARCHITECTURE

SENIOR LANDSCAPE ARCHITECT: LORENA WONG
CALCULATED-DESIGNED BY: KIMBERLY WHITE
CHECKED BY: CHRIS ELSE
REVISED BY: KW
DATE REVISED: 4/15/10

LAST REVISION: DATE PLOTTED => 25-JUN-2010
06-14-10 TIME PLOTTED => 18:24

Dist	COUNTY	ROUTE	POST MILES TOTAL PROJECT	SHEET No.	TOTAL SHEETS
04	SF	80	4.9/5.9	72	127

LICENSED LANDSCAPE ARCHITECT

6-21-10
PLANS APPROVAL DATE

LICENSED LANDSCAPE ARCHITECT — KIMBERLY WHITE No. 4893 — Signature — Renewal Date 2-28-12 — Date 4-15-10 — STATE OF CALIFORNIA

THE STATE OF CALIFORNIA OR ITS OFFICERS OR AGENTS SHALL NOT BE RESPONSIBLE FOR THE ACCURACY OR COMPLETENESS OF SCANNED COPIES OF THIS PLAN SHEET.

NOTE:

PIPE ANCHOR SHALL BE INSTALLED AT EACH FITTING, ON BOTH SIDES OF THE RISER LOCATIONS, AND AT 6 FEET Max ON CENTER.

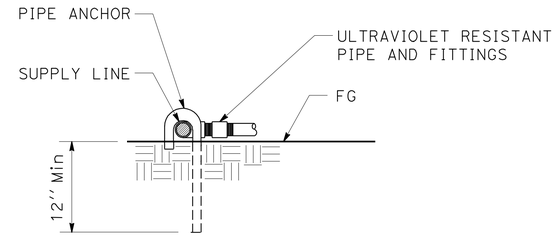

SECTION

PIPE STABILIZER

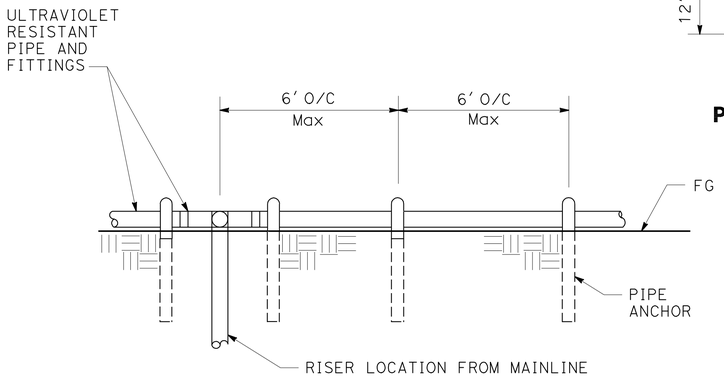

ELEVATION

ULTRAVIOLET RESISTANT PIPE ON-GRADE

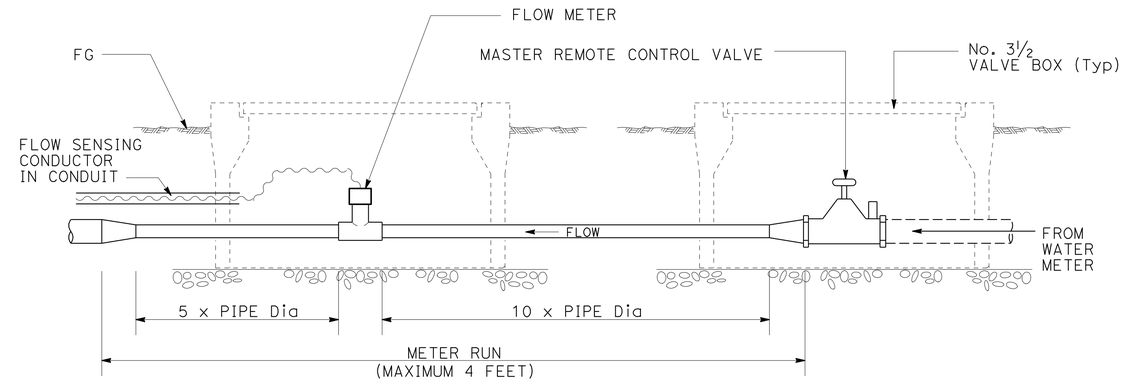

ELEVATION

FLOW SENSOR

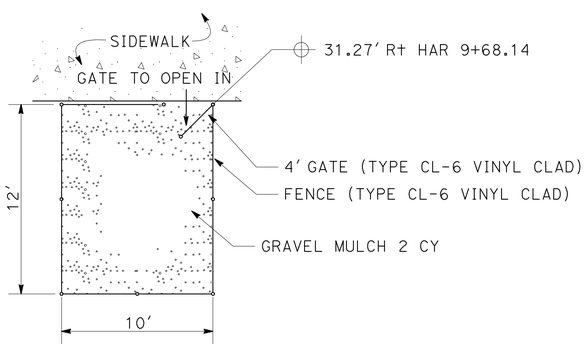

NOTE: ENCLOSURE FENCE AND GATE SHALL BE PARALLEL AND PERPENDICULAR TO SIDEWALK.

LOCATION 1

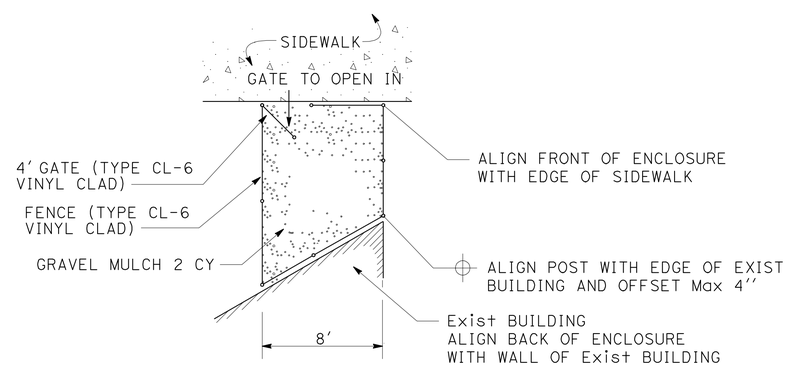

NOTE: ENCLOSURE GATE AND FENCE, AT THE FRONT AND SIDES, SHALL BE PARALLEL AND PERPENDICULAR TO SIDEWALK.

LOCATION 2

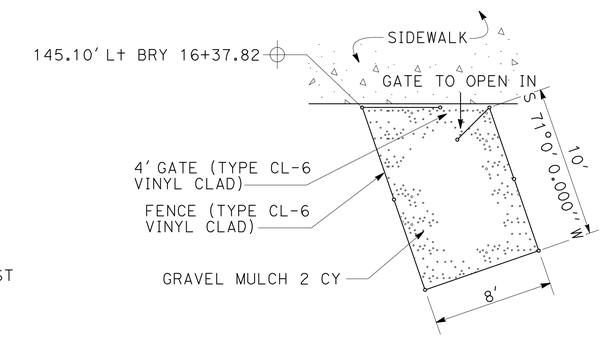

NOTES:

1. FRONT OF ENCLOSURE AND GATE SHALL BE PARALLEL TO SIDEWALK.
2. SIDES OF ENCLOSURE SHALL BE PERPENDICULAR TO ENCLOSURE BACK.

LOCATION 3

NOTES:

1. SEE LAYOUT SHEETS FOR IRRIGATION EQUIPMENT ENCLOSURE LOCATIONS.
2. IRRIGATION CONTROL CABINETS, BACKFLOW PREVENTER ASSEMBLIES, REMOTE CONTROL VALVES, FLOW SENSORS, WYE STRAINERS, AND GATE VALVES SHALL BE LOCATED INSIDE IRRIGATION EQUIPMENT ENCLOSURE, AS SHOWN ON PLANS.

SCHEMATIC PLAN

IRRIGATION EQUIPMENT ENCLOSURE

LANDSCAPE DETAILS

NO SCALE

LD-4

REVISED BY	DATE REVISED
KW	4/15/10

KIMBERLY WHITE — CHRIS ELSE

CALCULATED-DESIGNED BY — CHECKED BY

SENIOR LANDSCAPE ARCHITECT — LORENA WONG

STATE OF CALIFORNIA - DEPARTMENT OF TRANSPORTATION — LANDSCAPE ARCHITECTURE — Caltrans

LAST REVISION 06-14-10 — DATE PLOTTED => 25-JUN-2010 — TIME PLOTTED => 18:24

Dist	COUNTY	ROUTE	POST MILES TOTAL PROJECT	SHEET No.	TOTAL SHEETS
04	SF	80	4.9/5.9	73	127

LICENSED LANDSCAPE ARCHITECT

6-21-10
PLANS APPROVAL DATE

THE STATE OF CALIFORNIA OR ITS OFFICERS OR AGENTS SHALL NOT BE RESPONSIBLE FOR THE ACCURACY OR COMPLETENESS OF SCANNED COPIES OF THIS PLAN SHEET.

LICENSED LANDSCAPE ARCHITECT — KIMBERLY WHITE No. 4893 — Signature — Renewal Date 2-28-12 — 4-15-10 Date — STATE OF CALIFORNIA

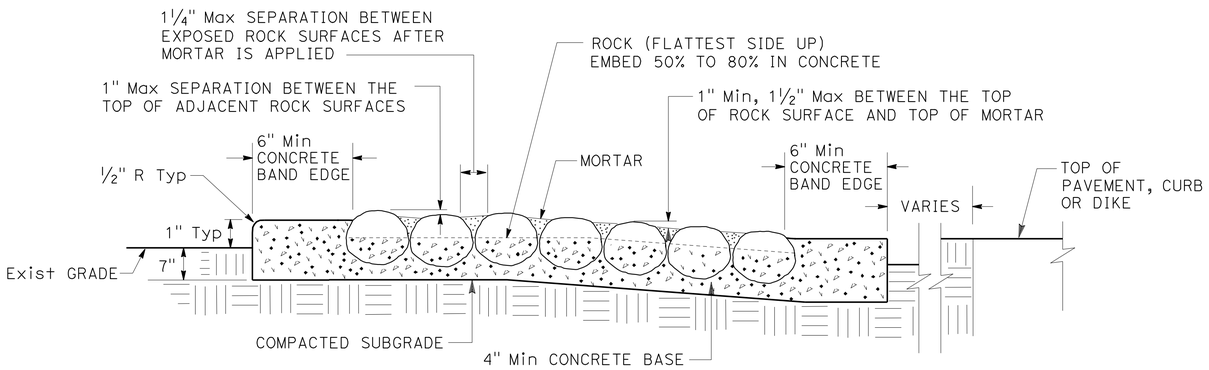

SECTION
ROCK BLANKET

NOTES:

1. COBBLES SHALL BE PLACED TO MINIMIZE MORTAR EXPOSURE TO THE TOP SURFACE.
2. REINFORCEMENT BARS SHALL HAVE A MINIMUM 2'' CLEARANCE FROM ALL CONCRETE EDGES.
3. CONSTRUCTION JOINTS SHALL BE AT 6' ON CENTER MINIMUM.
4. FOR LOCATIONS AND AREA REQUIREMENTS, SEE PLANTING PLANS.

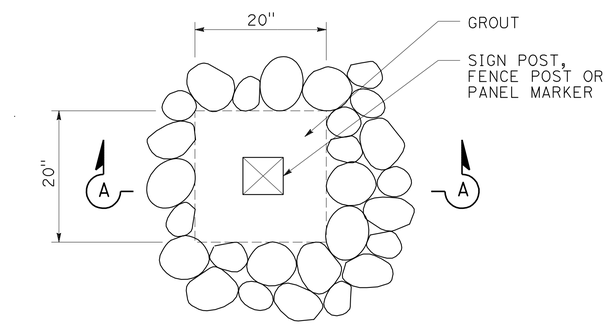

PLAN

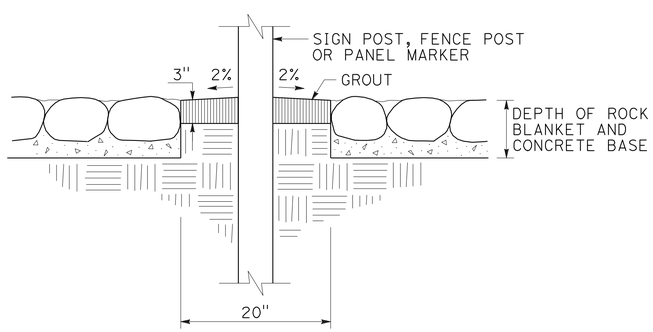

SECTION A-A
POST TREATMENT

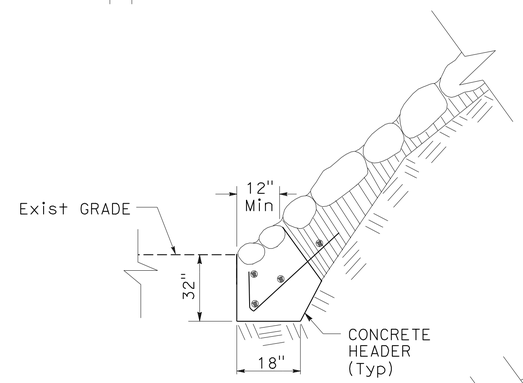

AT GRADE
SECTION

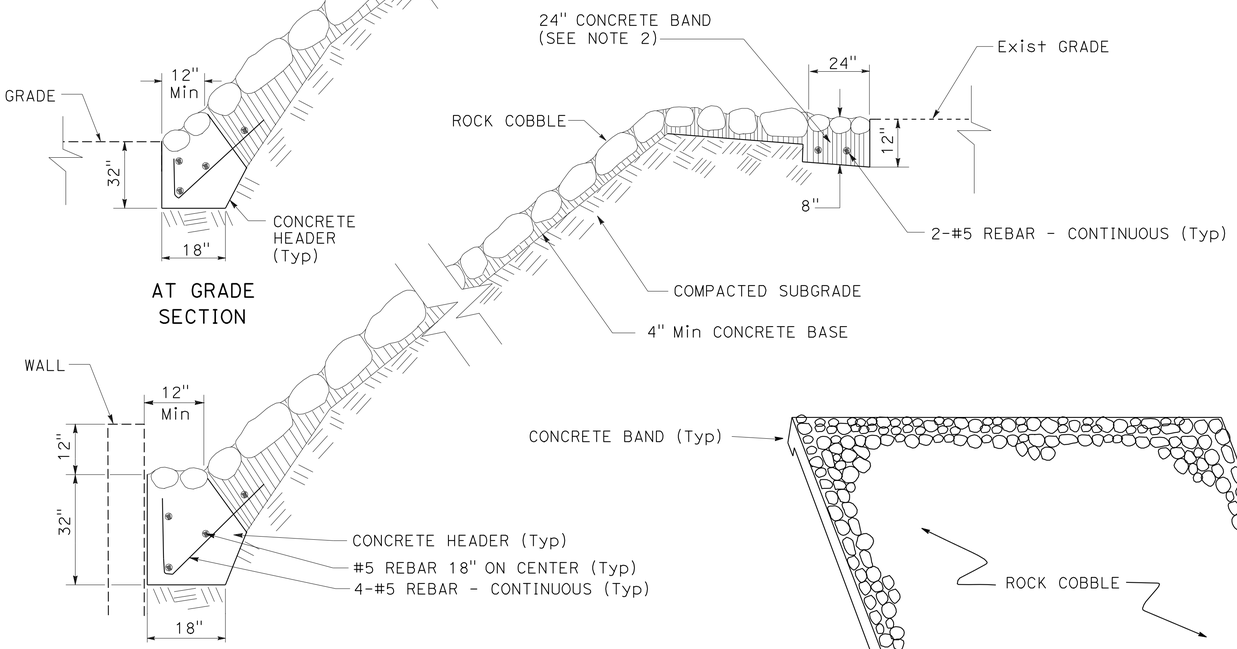

AT BACK OF WALL
SECTION

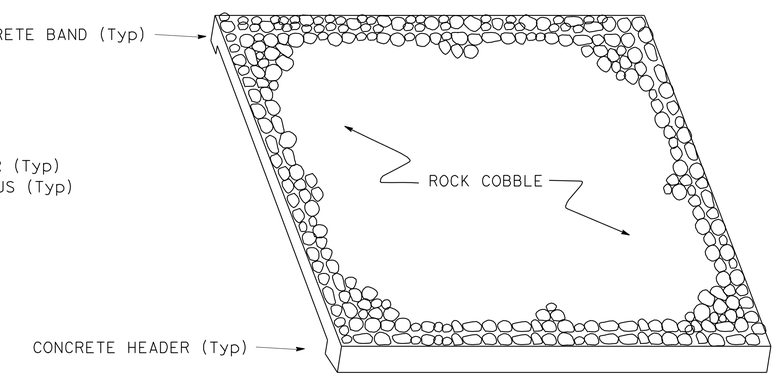

PICTORIAL VIEW

ROCK BLANKET - ON SLOPE

LANDSCAPE DETAILS
NO SCALE

LD-5

STATE OF CALIFORNIA - DEPARTMENT OF TRANSPORTATION
Caltrans® LANDSCAPE ARCHITECTURE

SENIOR LANDSCAPE ARCHITECT: LORENA WONG
CALCULATED-DESIGNED BY: KIMBERLY WHITE
CHECKED BY: CHRIS ELSE
REVISED BY: KW
DATE REVISED: 4/15/10

LAST REVISION: DATE PLOTTED => 28-JUN-2010 TIME PLOTTED => 07:51
06-14-10

Dist	COUNTY	ROUTE	POST MILES TOTAL PROJECT	SHEET No.	TOTAL SHEETS
04	SF	80	4.9/5.9	74	127

LICENSED LANDSCAPE ARCHITECT

6-21-10
PLANS APPROVAL DATE

LICENSED LANDSCAPE ARCHITECT
KIMBERLY WHITE No. 4893
Signature
2-28-12
Renewal Date
5-15-10
Date
STATE OF CALIFORNIA

THE STATE OF CALIFORNIA OR ITS OFFICERS OR AGENTS SHALL NOT BE RESPONSIBLE FOR THE ACCURACY OR COMPLETENESS OF SCANNED COPIES OF THIS PLAN SHEET.

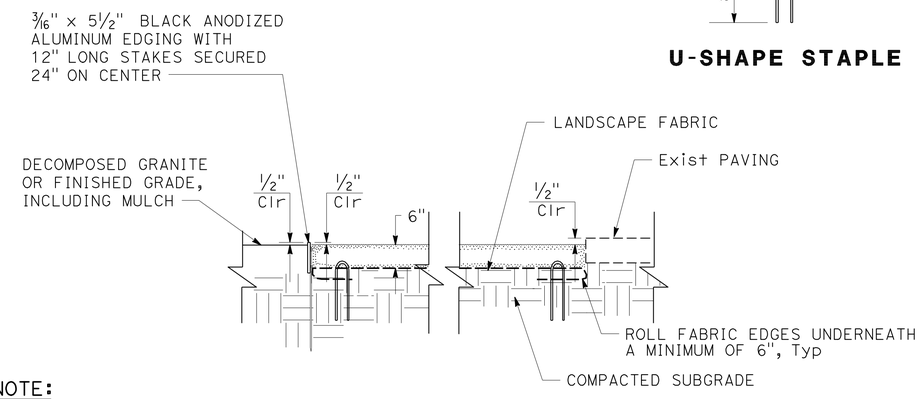

NOTE:

SECTIONS OF EDGING TO LOCK TOGETHER WITHOUT OFFSET OR DOUBLE THICKNESS AT THE JOINTS AND SECURED WITH TWO 12" STAKES.

SECTION
GRAVEL MULCH

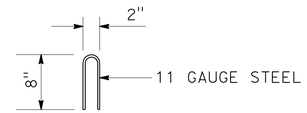

U-SHAPE STAPLE

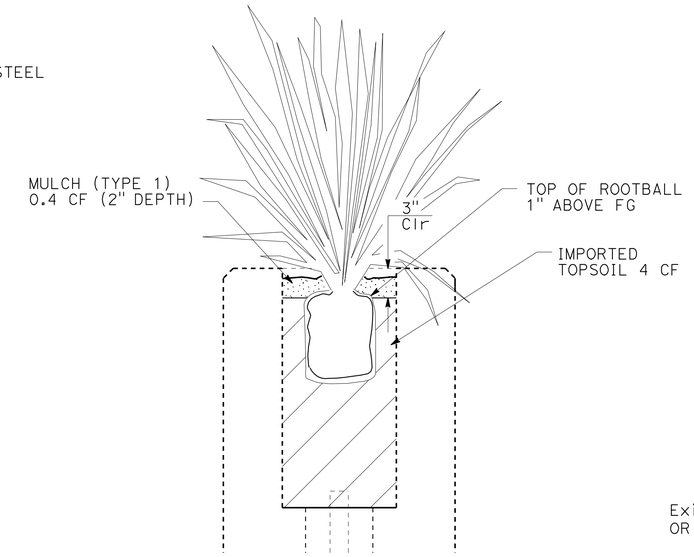

SECTION
CONCRETE PLANTER

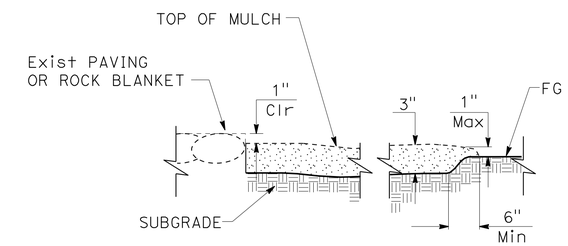

SECTION
MULCH EDGE DETAIL

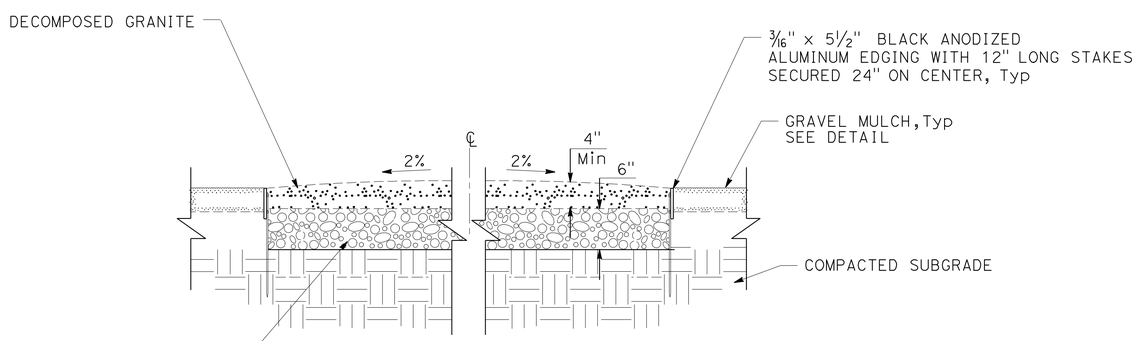

NOTE:

SECTIONS OF EDGING TO LOCK TOGETHER WITHOUT OFFSET OR DOUBLE THICKNESS AT THE JOINTS AND SECURED WITH TWO 12" STAKES.

SECTION
DECOMPOSED GRANITE

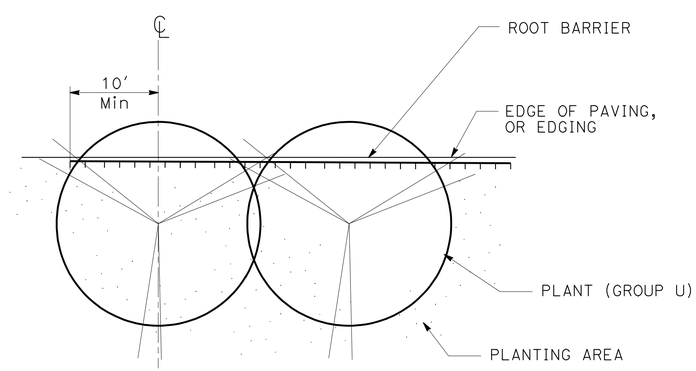

PLAN
ROOT BARRIER DETAIL

LANDSCAPE DETAILS

NO SCALE

LD-6

STATE OF CALIFORNIA - DEPARTMENT OF TRANSPORTATION
Caltrans® LANDSCAPE ARCHITECTURE

SENIOR LANDSCAPE ARCHITECT: LORENA WONG
CALCULATED-DESIGNED BY: KIMBERLY WHITE
CHECKED BY: CHRIS ELSE
REVISED BY: KW
DATE REVISED: 4/15/10

LAST REVISION 06-12-10
DATE PLOTTED => 28-JUN-2010
TIME PLOTTED => 08:10

Dist	COUNTY	ROUTE	POST MILES TOTAL PROJECT	SHEET No.	TOTAL SHEETS
04	SF	80	4.9/5.9	75	127

LICENSED LANDSCAPE ARCHITECT

6-21-10
PLANS APPROVAL DATE

LICENSED LANDSCAPE ARCHITECT — KIMBERLY WHITE No. 4893 — Signature — 2-28-12 Renewal Date — 5-15-10 Date — STATE OF CALIFORNIA

THE STATE OF CALIFORNIA OR ITS OFFICERS OR AGENTS SHALL NOT BE RESPONSIBLE FOR THE ACCURACY OR COMPLETENESS OF SCANNED COPIES OF THIS PLAN SHEET.

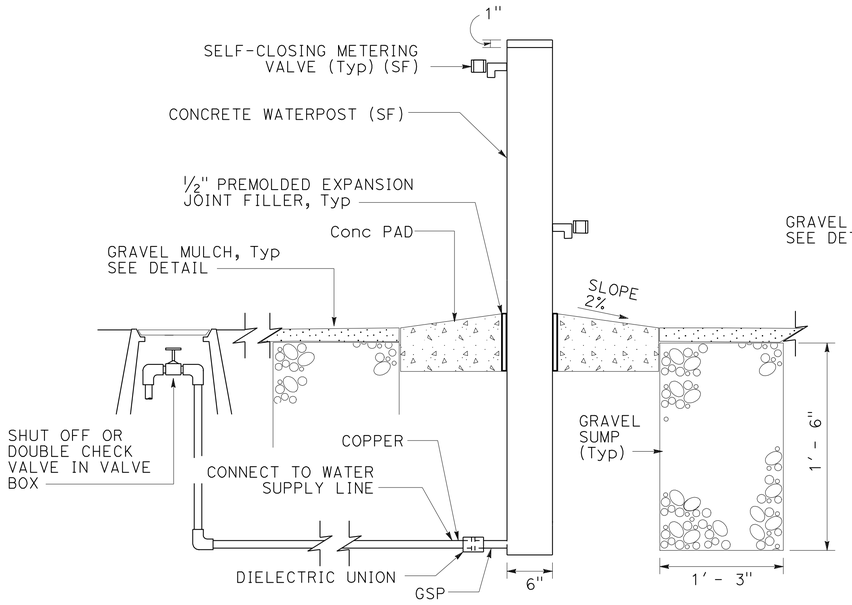

SECTION A - A

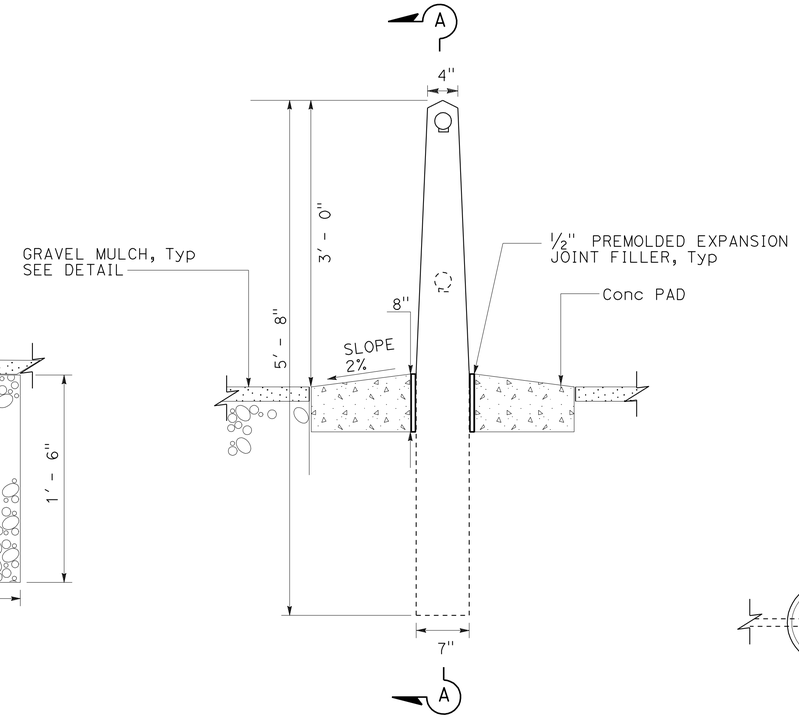

ELEVATION

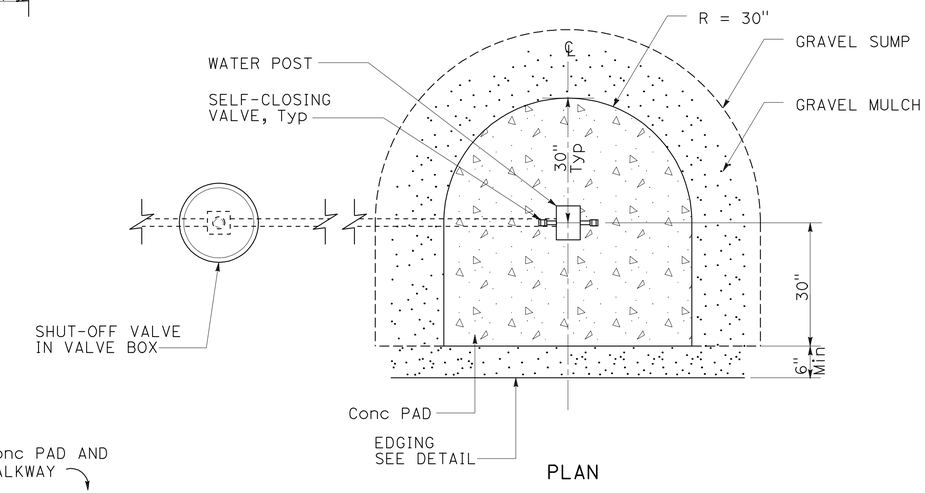

PLAN

NOTES:

1. ITEMS WITH (SF) DESIGNATION SHALL BE STATE FURNISHED.
2. GENERAL LOCATIONS OF WATER POST SHOWN ON PLANTING PLAN, PP-4.

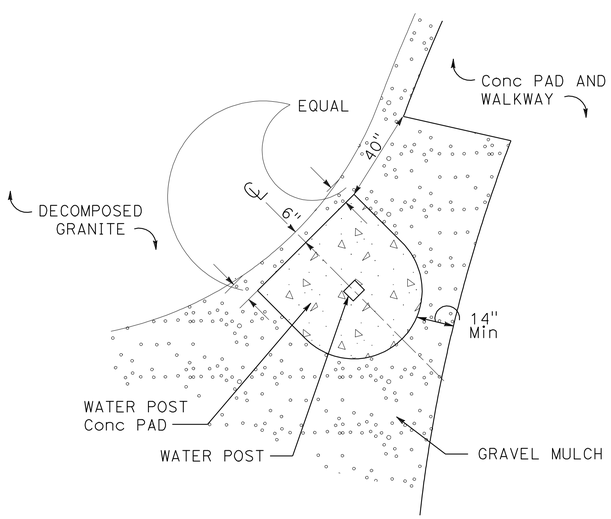

PLAN

DOG PLAY AREA LOCATION 1

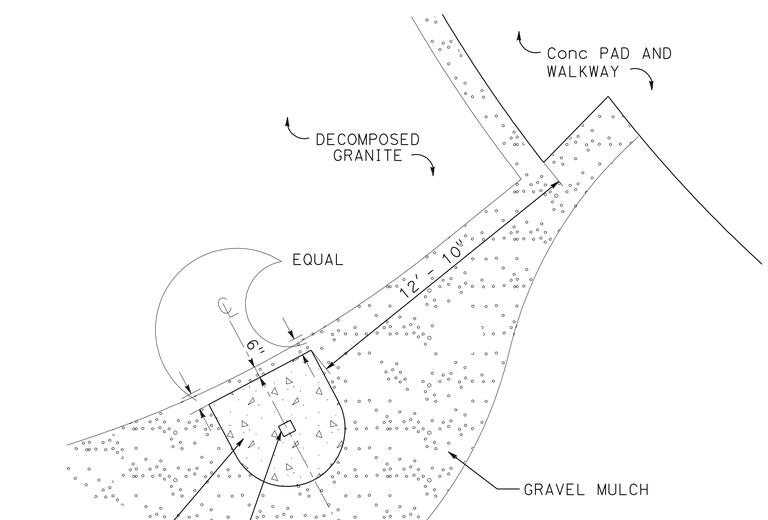

PLAN

DOG PLAY AREA LOCATION 2

WATER POST

LANDSCAPE DETAILS

NO SCALE

LD-7

STATE OF CALIFORNIA - DEPARTMENT OF TRANSPORTATION
Caltrans® LANDSCAPE ARCHITECTURE

SENIOR LANDSCAPE ARCHITECT: LORENA WONG
CALCULATED-DESIGNED BY: KIMBERLY WHITE
CHECKED BY: CHRIS ELSE
REVISED BY: KW
DATE REVISED: 4/15/10

LAST REVISION 06-14-10 | DATE PLOTTED => 28-JUN-2010 | TIME PLOTTED => 08:10

Dist	COUNTY	ROUTE	POST MILES TOTAL PROJECT	SHEET No.	TOTAL SHEETS
04	SF	80	4.9/5.9	76	127

LICENSED LANDSCAPE ARCHITECT

6-21-10
PLANS APPROVAL DATE

LICENSED LANDSCAPE ARCHITECT
KIMBERLY WHITE No. 4893
Signature
2-28-12
Renewal Date
4-15-10
Date
STATE OF CALIFORNIA

THE STATE OF CALIFORNIA OR ITS OFFICERS OR AGENTS SHALL NOT BE RESPONSIBLE FOR THE ACCURACY OR COMPLETENESS OF SCANNED COPIES OF THIS PLAN SHEET.

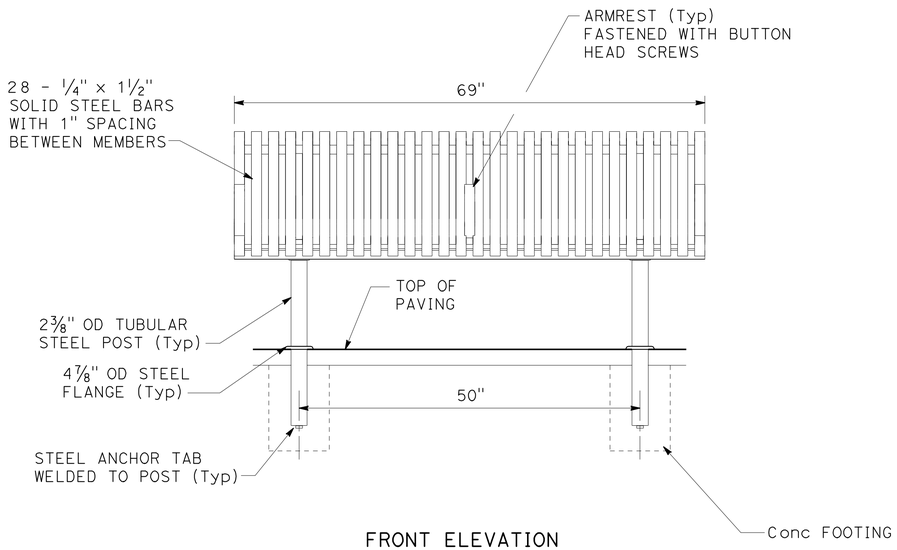

FRONT ELEVATION
69" BENCH

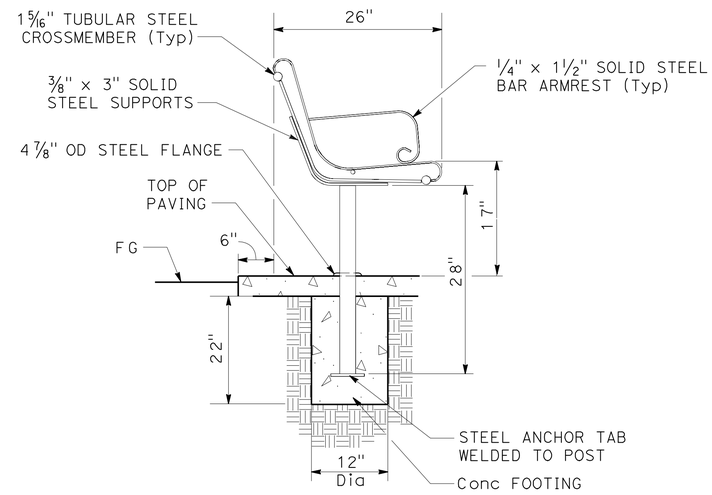

SECTION
69" BENCH

NOTE:

EACH BENCH SHALL HAVE THREE ARMRESTS, ONE AT EACH END AND ONE IN THE CENTER OF BENCH SEAT.

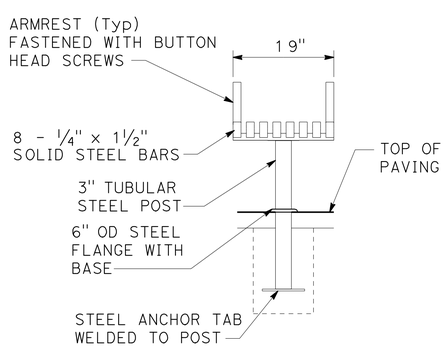

FRONT ELEVATION
19" BENCH

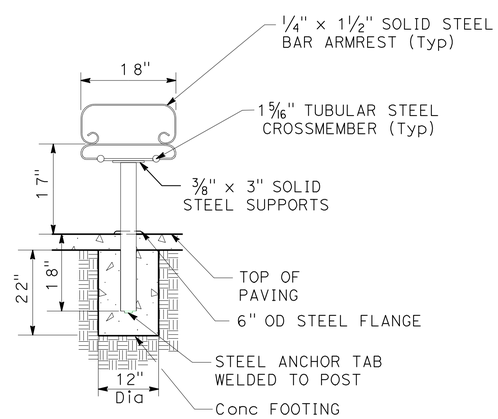

SECTION
19" BENCH

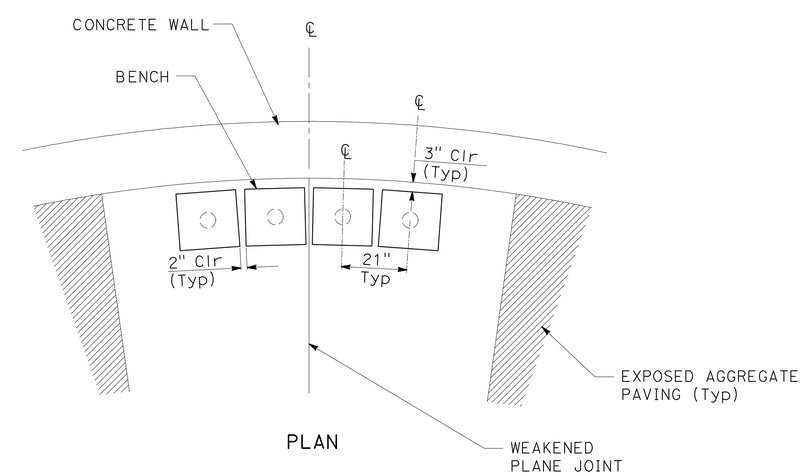

PLAN
19" BENCH

NOTE:

1. EACH BENCH SHALL HAVE TWO ARMRESTS, ONE AT EACH END.

LANDSCAPE DETAILS

NO SCALE

LD-8

REVISED BY	DATE REVISED
KW	4/15/10

KIMBERLY WHITE
CHRIS ELSE

CALCULATED-DESIGNED BY
CHECKED BY

SENIOR LANDSCAPE ARCHITECT
LORENA WONG

STATE OF CALIFORNIA - DEPARTMENT OF TRANSPORTATION
Caltrans® LANDSCAPE ARCHITECTURE

LAST REVISION 06-14-10
DATE PLOTTED => 28-JUN-2010
TIME PLOTTED => 08:10

Dist	COUNTY	ROUTE	POST MILES TOTAL PROJECT	SHEET No.	TOTAL SHEETS
04	SF	80	4.9/5.9	77	127

LICENSED LANDSCAPE ARCHITECT

6-21-10
PLANS APPROVAL DATE

LICENSED LANDSCAPE ARCHITECT
KIMBERLY WHITE No. 4889
Signature
2-28-12
Renewal Date
4-15-10
Date
STATE OF CALIFORNIA

THE STATE OF CALIFORNIA OR ITS OFFICERS OR AGENTS SHALL NOT BE RESPONSIBLE FOR THE ACCURACY OR COMPLETENESS OF SCANNED COPIES OF THIS PLAN SHEET.

NOTES:

1. 36-GALLON CAPACITY HIGH DENSITY PLASTIC LINER. LINER SITS ON 3/8" x 3" SUPPORT BARS.
2. 3/4" SQUARE CENTER ANCHOR BOLT HOLE ATTACHED TO SUPPORT BARS.
3. DOOR SHALL HAVE LOCKABLE LATCH.
4. OIL IMPREGNATED BRONZE BUSHINGS AND STAINLESS STEEL PIVOT PINS FOR DOOR MOVEMENT, WITH 3/16" SOLID STEEL LATCH ASSEMBLY.
5. LINER SHALL BE LIGHTWEIGHT CONSTRUCTION WITH MOLDED RIBS AND INTEGRAL HANDHOLDS. (WEIGHT NOT TO EXCEED 6 LBS).

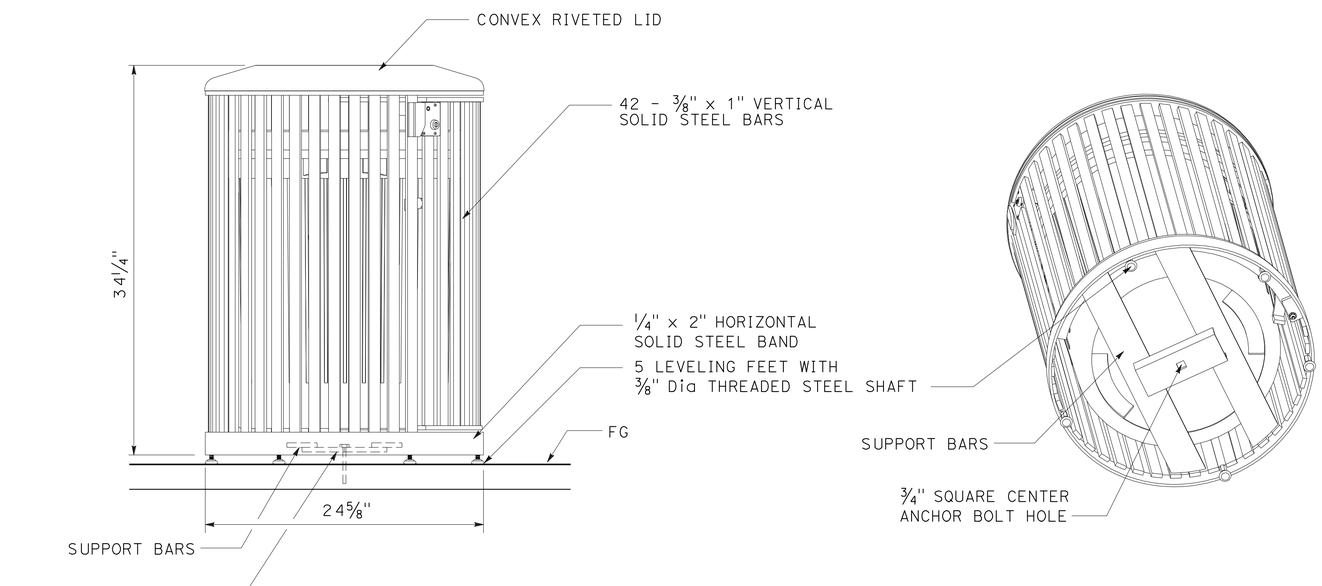

TRASH RECEPTACLE

LANDSCAPE DETAILS

NO SCALE

LD-9

REVISED BY	KW
DATE REVISED	4/15/10
KIMBERLY WHITE	
CHRIS ELSE	
CALCULATED-DESIGNED BY	
CHECKED BY	
SENIOR LANDSCAPE ARCHITECT	
LORENA WONG	

STATE OF CALIFORNIA - DEPARTMENT OF TRANSPORTATION
Caltrans® LANDSCAPE ARCHITECTURE

LAST REVISION 06-14-10
DATE PLOTTED => 28-JUN-2010
TIME PLOTTED => 08:10

Dist	COUNTY	ROUTE	POST MILES TOTAL PROJECT	SHEET No.	TOTAL SHEETS
04	SF	80	4.9/5.9	78	127

LICENSED LANDSCAPE ARCHITECT

6-21-10
PLANS APPROVAL DATE

LICENSED LANDSCAPE ARCHITECT
KIMBERLY WHITE No. 4893
Signature
2-28-12
Renewal Date
4-15-10
Date
STATE OF CALIFORNIA

THE STATE OF CALIFORNIA OR ITS OFFICERS OR AGENTS SHALL NOT BE RESPONSIBLE FOR THE ACCURACY OR COMPLETENESS OF SCANNED COPIES OF THIS PLAN SHEET.

NOTES:

1. GENERAL LOCATIONS OF PET WASTE BAG DISPENSERS SHOWN ON PLANTING PLAN, PP-4.
2. PET WASTE BAG DISPENSER POST TO BE LOCATED 6" FROM EDGE OF GRAVEL MULCH.
3. FRONT OF PET WASTE BAG DISPENSER AND SIGN SHALL BE PARALLEL TO EDGE OF GRAVEL MULCH.

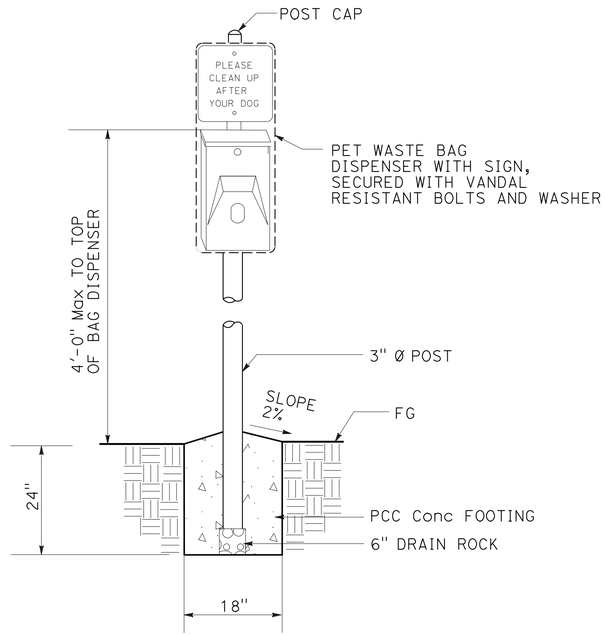

ELEVATION

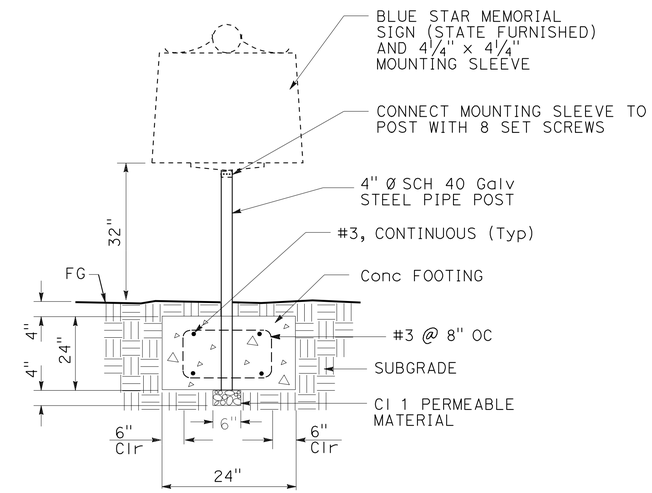

FRONT SECTION

BLUE STAR MEMORIAL POST

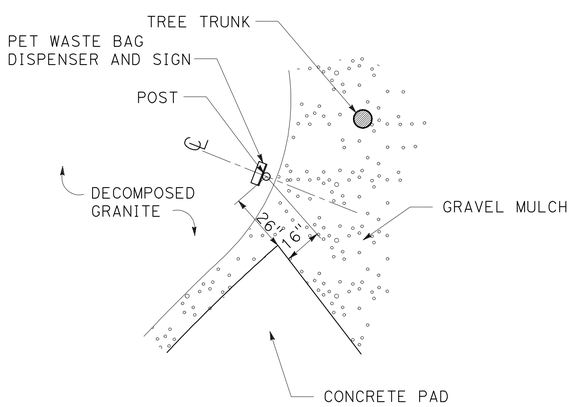

PLAN

DOG PLAY AREA 1

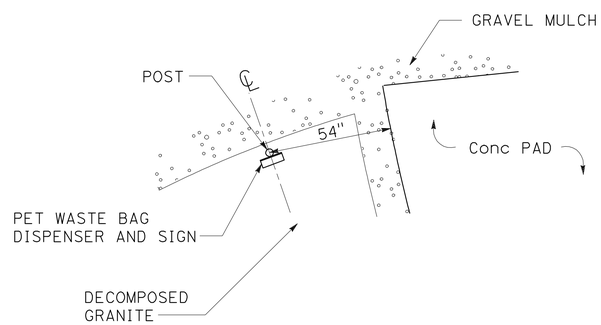

PLAN

DOG PLAY AREA 2

PET WASTE BAG DISPENSER

LANDSCAPE DETAILS

NO SCALE

LD-10

STATE OF CALIFORNIA - DEPARTMENT OF TRANSPORTATION
Caltrans® LANDSCAPE ARCHITECTURE

SENIOR LANDSCAPE ARCHITECT: LORENA WONG
CALCULATED-DESIGNED BY: KIMBERLY WHITE
CHECKED BY: CHRIS ELSE
REVISED BY: KW
DATE REVISED: 4/15/10

LAST REVISION 06-14-10
DATE PLOTTED => 28-JUN-2010
TIME PLOTTED => 08:10

Dist	COUNTY	ROUTE	POST MILES TOTAL PROJECT	SHEET No.	TOTAL SHEETS
04	SF	80	4.9/5.9	79	127

LICENSED LANDSCAPE ARCHITECT

6-21-10
PLANS APPROVAL DATE

LICENSED LANDSCAPE ARCHITECT
KIMBERLY WHITE No. 4893
Signature
2-28-12
Renewal Date
5-13-10
Date
STATE OF CALIFORNIA

THE STATE OF CALIFORNIA OR ITS OFFICERS OR AGENTS SHALL NOT BE RESPONSIBLE FOR THE ACCURACY OR COMPLETENESS OF SCANNED COPIES OF THIS PLAN SHEET.

ABBREVIATIONS:

CCU — COMMON COMMUNICATION UNIT
COP — COPPER PIPE (TYPE K)
FU — FIELD UNIT
SAT — SATELLITE CONTROLLER
UVR — ULTRAVIOLET RESISTANT
WS — WYE STRAINER

SUBTOTALS PER VALVE ON LATERAL SUPPLY SIDE OF CONTROL VALVE

DESCRIPTION			UNIT	VALVE OR ASSEMBLY NUMBER 1(1)-1	1(1)-2	1(1)-3	1(1)-4	1(1)-5	1(1)-6	1(1)-7	1(1)-8	1(1)-9	1(1)-10	1(1)-11	1(2)-1	1(2)-2	1(3)-1	1(3)-2	1(3)-3	1(3)-4	SUBTOTALS	UNIT	DESCRIPTION		
PLASTIC PIPE SUPPLY LINE	PR 200	¾"	LF	103	790	220	105	780	1270	279	212	173	139	960	590	670	490	790	280	530	8,381	LF	¾"	PR 200	PLASTIC PIPE SUPPLY LINE
		1"	LF	-	220	-	-	30	40	-	-	-	-	210	10	-	120	220	30	70	950	LF	1"		
		1¼"	LF	-	30	-	-	220	90	-	-	-	-	40	60	160	50	30	-	50	730	LF	1¼"		
		1½"	LF	-	50	-	-	-	70	-	-	-	-	-	-	-	-	50	-	-	170	LF	1½"		
		2"	LF	-	-	-	-	-	40	-	-	-	-	30	-	-	-	-	-	-	70	LF	2"		
	SCH 40 UVR	1"	LF	-	-	-	-	-	-	-	-	-	-	-	-	-	-	-	-	-	-	LF	1"	SCH 40 UVR	
GSP																								GSP	
SPRINKLER TYPE		A-6	EA	-	-	-	-	-	-	-	-	-	-	-	-	-	-	13	-	11	24	EA	A-6	SPRINKLER TYPE	
		C-2 Mod	EA	-	104	-	-	20	132	-	-	-	-	104	65	76	62	-	57	-	620	EA	C-2 Mod		
		C-2	EA	-	-	-	-	39	-	-	-	-	-	-	-	-	-	-	-	-	39	EA	C-2		
		D-1	EA	-	-	-	-	-	-	-	-	-	-	-	-	-	-	-	-	-	-	EA	D-1		
		D-3	LF	720	-	1390	970	-	-	1240	760	1200	1040	-	-	-	-	-	-	-	7,320	LF	D-3		

DESCRIPTION			UNIT	VALVE OR ASSEMBLY NUMBER 1(4)-1	1(4)-2	1(4)-3	1(4)-4	1(4)-5	1(4)-6	1(4)-7	1(4)-8	1(4)-9	1(4)-10	1(4)-11	1(4)-12	1(4)-13	5-(1)	5-(2)	5-(3)	5-(4)	SUBTOTALS	UNIT	DESCRIPTION		
PLASTIC PIPE SUPPLY LINE	PR 200	¾"	LF	1580	950	1130	870	-	-	800	760	-	630	570	630	970	370	570	610	600	11,040	LF	¾"	PR 200	PLASTIC PIPE SUPPLY LINE
		1"	LF	180	-	20	-	-	-	20	-	240	160	-	-	10	10	60	100	50	850	LF	1"		
		1¼"	LF	130	10	30	20	-	-	40	250	-	130	-	330	20	80	80	-	40	1,160	LF	1¼"		
		1½"	LF	20	70	100	290	-	-	170	-	-	-	-	-	180	120	100	40	-	1,090	LF	1½"		
		2"	LF	30	-	-	-	-	-	-	-	-	20	-	-	-	20	-	-	-	70	LF	2"		
	SCH 40 UVR	1"	LF	-	-	-	-	270	180	-	-	-	-	-	-	-	-	-	-	-	450	LF	1"	SCH 40 UVR	
GSP		1"	LF	-	-	-	-	-	-	-	-	-	-	-	-	-	100	-	-	-	100	LF	1"	GSP	
SPRINKLER TYPE		A-6	EA	-	-	-	-	-	-	-	-	-	-	-	-	-	-	-	-	17	17	EA	A-6	SPRINKLER TYPE	
		C-2 Mod	EA	138	-	-	-	-	-	14	-	-	14	-	-	12	14	18	8	-	218	EA	C-2 Mod		
		C-2	EA	-	86	98	94	-	-	68	85	-	99	-	57	90	123	51	74	-	925	EA	C-2		
		D-1	EA	-	-	-	-	482	360	-	-	394	-	-	-	-	-	-	-	-	1,236	EA	D-1		
		D-3	LF	-	-	-	-	-	-	-	-	-	-	880	-	-	-	-	-	-	880	LF	D-3		

IRRIGATION QUANTITIES

IQ-1

STATE OF CALIFORNIA - DEPARTMENT OF TRANSPORTATION
Caltrans® LANDSCAPE ARCHITECTURE

SENIOR LANDSCAPE ARCHITECT: LORENA WONG
CALCULATED-DESIGNED BY: KIMBERLY WHITE
CHECKED BY: CHRIS ELSE
REVISED BY: KW
DATE REVISED: 4/15/10

LAST REVISION 06-12-10
DATE PLOTTED => 28-JUN-2010
TIME PLOTTED => 07:01

Dist	COUNTY	ROUTE	POST MILES TOTAL PROJECT	SHEET No.	TOTAL SHEETS
04	SF	80	4.9/5.9	80	127

LICENSED LANDSCAPE ARCHITECT

6-21-10
PLANS APPROVAL DATE

LICENSED LANDSCAPE ARCHITECT
KIMBERLY WHITE No. 4983
Signature
2-28-12
Renewal Date
5-15-10
Date
STATE OF CALIFORNIA

THE STATE OF CALIFORNIA OR ITS OFFICERS OR AGENTS SHALL NOT BE RESPONSIBLE FOR THE ACCURACY OR COMPLETENESS OF SCANNED COPIES OF THIS PLAN SHEET.

SUBTOTALS PER PLAN SHEET ON MAIN SUPPLY SIDE OF CONTROL VALVE

DESCRIPTION			UNIT	SHEET NUMBER I-1	I-2	I-3	SUBTOTALS
BPA		2"	EA	1	1	1	3
BPA		ENCLOSURE	EA	2	1	1	4
IRRIGATION CONTROLLER		CCU	EA	1	-	-	1
IRRIGATION CONTROLLER		12 STATION FU	EA	3	-	-	3
IRRIGATION CONTROLLER		16 STATION FU	EA	-	1	-	1
IRRIGATION CONTROLLER		8 STATION SAT	EA	-	-	1	1
IRRIGATION CONTROLLER	CEC	SINGLE	EA	-	-	1	1
IRRIGATION CONTROLLER	CEC	DOUBLE	EA	3	1	-	4
VALVES AND ASSEMBLIES	RCV	1"	EA	8	6	3	17
VALVES AND ASSEMBLIES	RCV	1½"	EA	4	3	1	8
VALVES AND ASSEMBLIES	RCV	2"	EA	1	1	1	3
VALVES AND ASSEMBLIES	BV	1½"	EA	8	3	1	12
VALVES AND ASSEMBLIES	BV	2"	EA	-	1	-	1
VALVES AND ASSEMBLIES	GV	2"	EA	2	3	2	7
VALVES AND ASSEMBLIES	QCV	¾"	EA	7	4	1	12
VALVES AND ASSEMBLIES	FS	1"	EA	3	1	1	5
VALVES AND ASSEMBLIES	VAU	1"	EA	7	2	2	11
VALVES AND ASSEMBLIES	WS	1"	EA	3	2	-	5
VALVES AND ASSEMBLIES	WS	1½"	EA	2	1	1	4
VALVES AND ASSEMBLIES	WS	2"	EA	-	1	-	1
VALVES AND ASSEMBLIES	CARV	1"	EA	7	1	-	8
VALVES AND ASSEMBLIES	CV	1"	EA	-	-	5	5
PLASTIC PIPE SUPPLY LINE	PR 200	¾"	LF	-	-	-	-
PLASTIC PIPE SUPPLY LINE	PR 200	1"	LF	-	-	-	-
PLASTIC PIPE SUPPLY LINE	PR 200	1¼"	LF	-	-	-	-
PLASTIC PIPE SUPPLY LINE	PR 200	1½"	LF	-	-	30	30
PLASTIC PIPE SUPPLY LINE	PR 200	2"	LF	1270	960	100	2,330
PLASTIC PIPE SUPPLY LINE	PR 200	2½"	LF	-	960	-	960
PLASTIC PIPE SUPPLY LINE	SCH 40 UVR	1"	LF	-	-	-	-
GSP		1"	LF	-	-	-	-
COP		1"	LF	-	-	300	300

TOTAL QUANTITIES

TOTALS	UNIT	DESCRIPTION		
3	EA	2"		BPA
4	EA	ENCLOSURE		BPA
1	EA	CCU		IRRIGATION CONTROLLER
3	EA	12 STATION FU		IRRIGATION CONTROLLER
1	EA	16 STATION FU		IRRIGATION CONTROLLER
1	EA	8 STATION SAT		IRRIGATION CONTROLLER
1	EA	SINGLE	CEC	IRRIGATION CONTROLLER
4	EA	DOUBLE	CEC	IRRIGATION CONTROLLER
17	EA	1"	RCV	VALVES AND ASSEMBLIES
8	EA	1½"	RCV	VALVES AND ASSEMBLIES
3	EA	2"	RCV	VALVES AND ASSEMBLIES
12	EA	1½"	BV	VALVES AND ASSEMBLIES
1		2"	BV	VALVES AND ASSEMBLIES
7	EA	2"	GV	VALVES AND ASSEMBLIES
12	EA	¾"	QCV	VALVES AND ASSEMBLIES
5	EA	1"	FS	VALVES AND ASSEMBLIES
11	EA	1"	VAU	VALVES AND ASSEMBLIES
5	EA	1"	WS	VALVES AND ASSEMBLIES
4	EA	1½"	WS	VALVES AND ASSEMBLIES
1	EA	2"	WS	VALVES AND ASSEMBLIES
	EA			
8	EA	1"	CARV	VALVES AND ASSEMBLIES
5	EA	1"	CV	VALVES AND ASSEMBLIES
19,421	LF	¾"	PR 200	PLASTIC PIPE SUPPLY LINE
1,800	LF	1"	PR 200	PLASTIC PIPE SUPPLY LINE
1,890	LF	1¼"	PR 200	PLASTIC PIPE SUPPLY LINE
1,290	LF	1½"	PR 200	PLASTIC PIPE SUPPLY LINE
2,470	LF	2"	PR 200	PLASTIC PIPE SUPPLY LINE
960	LF	2½"	PR 200	PLASTIC PIPE SUPPLY LINE
450	LF	1"	SCH 40 UVR	PLASTIC PIPE SUPPLY LINE
100	LF	1"	GSP	
300	LF	1"	COP	
41	EA	A-6		SPRINKLER TYPE
838	EA	C-2 Mod		SPRINKLER TYPE
964	EA	C-2		SPRINKLER TYPE
1,236	EA	D-1		SPRINKLER TYPE
8,200	LF	D-3		SPRINKLER TYPE

FOR ABBREVIATIONS, SEE SHEET IQ-1

IRRIGATION QUANTITIES

IQ-2

STATE OF CALIFORNIA - DEPARTMENT OF TRANSPORTATION
Caltrans LANDSCAPE ARCHITECTURE

SENIOR LANDSCAPE ARCHITECT: LORENA WONG
CALCULATED-DESIGNED BY: KIMBERLY WHITE
CHECKED BY: CHRIS ELSE
REVISED BY: KW
DATE REVISED: 3/10/10

LAST REVISION 06-12-10
DATE PLOTTED => 28-JUN-2010
TIME PLOTTED => 07:01

Dist	COUNTY	ROUTE	POST MILES TOTAL PROJECT	SHEET No.	TOTAL SHEETS
04	SF	80	4.9/5.9	81	127

Kenneth Y. Xu 4-19-10
REGISTERED ELECTRICAL ENGINEER DATE

6-21-10
PLANS APPROVAL DATE

REGISTERED PROFESSIONAL ENGINEER Kenneth Y. Xu No. 15219 Exp. 6-30-10 ELECT STATE OF CALIFORNIA

THE STATE OF CALIFORNIA OR ITS OFFICERS OR AGENTS SHALL NOT BE RESPONSIBLE FOR THE ACCURACY OR COMPLETENESS OF SCANNED COPIES OF THIS PLAN SHEET.

GENERAL NOTES:

1. NO ABOVE GROUND ELECTRICAL WORK SHALL BE PERFORMED ON ANY SYSTEM WITHIN THE PROJECT SITE UNTIL ALL CONTRACTOR-FURNISHED ELECTRICAL MATERIALS FOR THAT INDIVIDUAL SYSTEM HAS BEEN TESTED AND DELIVERED TO CONTRACTOR.
2. THE NEUTRAL CONDUCTOR SHALL RUN FROM THE SERVICE EQUIPMENT ENCLOSURE TO THE CONTROLLER CABINET WITHOUT SPLICING TO ANY OTHER NEUTRAL CONDUCTOR.
3. THE CLEARANCE BETWEEN THE BOTTOM OF THE LOWEST CIRCUIT BREAKER AND THE BOTTOM OF THE SERVICE EQUIPMENT ENCLOSURE FOR A TYPE III-A SERIES SHALL BE 24 INCHES MINIMUM.
4. NO OVERHEAD SIGN PANEL SHALL BE INSTALLED UNTIL THE OVERHEAD SIGN LIGHTING IS COMPLETELY OPERATIONAL.
5. WHERE ONE OR MORE TRAFFIC SIGNAL DETECTOR(S) CONSIST OF A SEQUENCE OF 4 LOOPS IN A SINGLE LANE, THE FRONT LOOP CLOSEST TO THE LIMIT LINE OR CROSSWALK SHALL BE LOCATED 1 FOOT FROM THE LINE. THE SET OF 3 LOOPS OR 4 LOOPS ASSIGNED TO THE SAME LOOP DETECTOR LEAD-IN CABLE (DLC) SHALL BE CONNECTED IN SERIES FOR TRAFFIC SIGNAL SYSTEM ONLY AND NOT FOR RAMP METERING SYSTEM.
7. WHERE 6 OR MORE 3-INCH CONDUITS ENTER A No. 6 PULL BOX, THE CONDUITS SHALL ENTER AT AN ANGLE NOT GREATER THAN 45-DEGREES FROM THE HORIZONTAL.
8. AT LEAST THREE WORKING DAYS PRIOR TO PERFORMING ANY WORK ON EACH EXISTING SYSTEM, THE CONTRACTOR SHALL NOTIFY THE DEPARTMENT OF TRANSPORTATION, ELECTRICAL AND SIGNAL MAINTENANCE SUPERINTENDENT, PHONE (415) 330-6500.
9. TO MINIMIZE INTERRUPTING THE OPERATION OF TRAFFIC SIGNAL SYSTEM, ANY DOWN TIME DUE TO THE REMOVAL OR MODIFICATION OF SIGNAL STANDARD DURING CONSTRUCTION SHOULD BE LIMITED.
10. EQUIPMENT MOUNTED ON STANDARDS SHALL BE INSTALLED ON THE SIDE OPPOSITE APPROACHING TRAFFIC UNLESS OTHERWISE NOTED.
11. CONTRACTOR SHALL DETERMINE THE EXACT LOCATION OF ALL UNDERGROUND UTILITIES AND VERIFY ALL CONDITION ON THE JOB SITE. HAND DIG FOUNDATION UNTIL ALL CLEAR OF OBSTRUCTIONS.
12. ANY ABOVE GROUND ELECTRICAL EQUIPMENT SHALL BE INSTALLED AT THE LOCATION WHICH MAINTAINS AN UNOBSTRUCTED PATH OF TRAVEL, WITH A MINIMUM CLEARANCE WIDTH OF 4 FEET, EXCEPT NEAR STANDARDS, A MINIMUM LATERAL CLEARANCE OF 2'-8" MUST BE PROVIDED.
13. SERVICE DISCONNECTION AND RECONNECTION FOR EXISTING CITY STREET LIGHTING SYSTEM SHALL BE COORDINATED WITH UTILITY COMPANY AND THE CITY OF SAN FRANCISCO.
14. CITY STREET LIGHTING SYSTEM SHALL REMAIN IN OPERATION.
15. ALL PEDESTRIAN SIGNAL INDICATIONS SHALL BE THE COUNTDOWN AND LED TYPE.
16. SPLICING SHALL NOT BE PERMITTED EXCEPT FOR MAST ARM HEADS. WHEN SPLICING IS REQUIRED, IT SHALL BE COMPLETED IN PULL BOXES OR AS DIRECTED BY THE ENGINEER.

PROJECT NOTES:

1 RS EXISTING CITY CONTROLLER ASSEMBLY. REMOVE FOUNDATION.

2 AFTER THE NEW SYSTEM IS INSTALLED AND IN EFFECTIVE OPERATION:
- RC ALL Exist PULL BOXES NOT TO BE REUSED
- AB ALL Exist UNDERGROUND CONDUITS NOT TO BE REUSED
- RC ALL Exist EXPOSED AND NOT TO BE REUSED CONDUITS FOR SIGNAL ATTACHED TO Exist LIGHTING STANDARDS
- RC ALL Exist TRAFFIC SIGNAL CONDUCTORS NOT TO BE REUSED

3 RC ALL Exist SIGNAL AND LIGHTING STANDARDS NOT REUSED UNLESS OTHERWISE NOTED.

4 FRONT DOOR OF CABINET SHALL FACE TO THE DIRECTION APPROVED BY THE ENGINEER OR AS SHOWN ON THE PLANS.

5 INSTALL MODEL 332 CABINET FOUNDATION AND STATE-FURNISHED CONTROLLER ASSEMBLY. SEE DETAILS ON SHEET ES-3C.

6 3 "C, MT.

7 1½"C, 3#2.

8 1½"C, 2#8 (120 V IRRIGATION).

9 1½"C, 2#6 (240 V LIGHTING).

10 1½"C, 2#6 (240 V LIGHTING), 2#8 (120 V IRRIGATION).

11 SC BY PG&E, COVER SHALL BE MARKED AS "CALTRANS/PG&E".

12 INSTALL TYPE III-AF SERVICE EQUIPMENT ENCLOSURE. PROVIDE EQUIPMENT ITEMS 1 TO 9 AND 22. WIRING DIAGRAM ON SHEET E-11.

13 INSTALL TYPE III-AF SERVICE EQUIPMENT ENCLOSURE. PROVIDE EQUIPMENT ITEMS 1 TO 10, 14, 22 AND 28 TO 30. WIRING DIAGRAM ON SHEET E-11.

14 INSTALL TYPE III-AF SERVICE EQUIPMENT ENCLOSURE. PROVIDE EQUIPMENT ITEMS 1 TO 10, 14, 2-22 AND 28 TO 30. WIRING DIAGRAM ON SHEET E-11.

15 NOT USED.

16 NOT USED.

17 1½"C, 2#6 (240 V LIGHTING), 3#14(120 V, PEU).

18 1½"C, 2#6 (240 V LIGHTING), 2#8 (120 V IRRIGATION), 3#14(120 V, PEU)

19 1½"C, 3#14(120 V, PEU).

20 INSTALL PEU ON TOP OF TYPE 1-B POLE.

21 INSTALL TYPE III-AF SERVICE EQUIPMENT ENCLOSURE. PROVIDE EQUIPMENT ITEMS 1 TO 10, 14, 18, 19, 21, 22 AND 28 TO 30. WIRING DIAGRAM ON SHEET E-11.

22 INSTALL TYPE III-AF SERVICE EQUIPMENT ENCLOSURE. PROVIDE EQUIPMENT ITEMS 1 TO 10, 14, 21 AND 28 TO 30. WIRING DIAGRAM ON SHEET E-11.

23 INSTALL TYPE III-AF SERVICE EQUIPMENT ENCLOSURE. PROVIDE EQUIPMENT ITEMS 1 TO 10, 14 AND 28 TO 30. WIRING DIAGRAM ON SHEET E-11.

INDEX OF ELECTRICAL SHEETS:

DRAWING No.	TITLE
E-1	ELECTRICAL NOTES, INDEX, ABBREVIATIONS AND SYMBOLS
E-2	ELECTRIC SERVICE (IRRIGATION) (ICC-CCU '1', FIELD UNIT '2' AND '3')
E-3	ELECTRIC SERVICE (IRRIGATION) (ICC-FIELD UNIT '4', SAT '5')
E-4	LIGHTING (LOCATION 1)
E-5	LIGHTING (LOCATION 2)
E-6	LIGHTING (LOCATION 3)
E-7	MODIFY SIGNAL AND LIGHTING (LOCATION 1)
E-8	MODIFY SIGNAL AND LIGHTING (LOCATION 1) (CONDUCTOR, POLE AND EQUIPMENT SCHEDULES)
E-9	MODIFY SIGNAL AND LIGHTING (LOCATION 2)
E-10	MODIFY SIGNAL AND LIGHTING (LOCATION 2) (CONDUCTOR, POLE AND EQUIPMENT SCHEDULES)
E-11 TO E-16	ELECTRICAL DETAILS

ABBREVIATIONS:

CTID	CALTRANS IDENTIFICATION NUMBER
PG&E	PACIFIC GAS AND ELECTRIC COMPANY

SYMBOLS:

EXISTING	PROPOSED	
C		CITY ELECTROLIER
	C4X	CITY PULL BOX (TYPE 4X)
		ARCHITECTURAL LIGHT TYPE I, INSTALLATION SEE DETAIL A IN SHEET E-12
		ARCHITECTURAL LIGHT TYPE II INSTALLATION SEE DETAIL B IN SHEET E-12
		ARCHITECTURAL LIGHT TYPE III INSTALLATION SEE DETAIL C IN SHEET E-12
	PG&E	PB PER SERVICE UTILITY REQUIREMENTS

ELECTRICAL NOTES, INDEX, ABBREVIATIONS AND SYMBOLS

E-1

REVISED BY	DATE REVISED
HQG	4/6/10

HENRY Q. GU — KENNETH Y. XU — CALCULATED-DESIGNED BY — CHECKED BY

FUNCTIONAL SUPERVISOR: LAI HONG CHIU

STATE OF CALIFORNIA - DEPARTMENT OF TRANSPORTATION — Caltrans — ELECTRICAL

LAST REVISION 06-08-10 — DATE PLOTTED => 28-JUN-2010 — TIME PLOTTED => 07:03

Dist	COUNTY	ROUTE	POST MILES TOTAL PROJECT	SHEET No.	TOTAL SHEETS
04	SF	80	4.9/5.9	82	127

REGISTERED ELECTRICAL ENGINEER — DATE: 4-19-10

PLANS APPROVAL DATE: 6-21-10

REGISTERED PROFESSIONAL ENGINEER — Kenneth Y. Xu — No. 15219 — Exp 6-30-10 — ELECT — STATE OF CALIFORNIA

THE STATE OF CALIFORNIA OR ITS OFFICERS OR AGENTS SHALL NOT BE RESPONSIBLE FOR THE ACCURACY OR COMPLETENESS OF SCANNED COPIES OF THIS PLAN SHEET.

FOR ACCURATE RIGHT OF WAY AND ACCESS DATA, CONTACT RIGHT OF WAY ENGINEERING AT THE DISTRICT OFFICE.

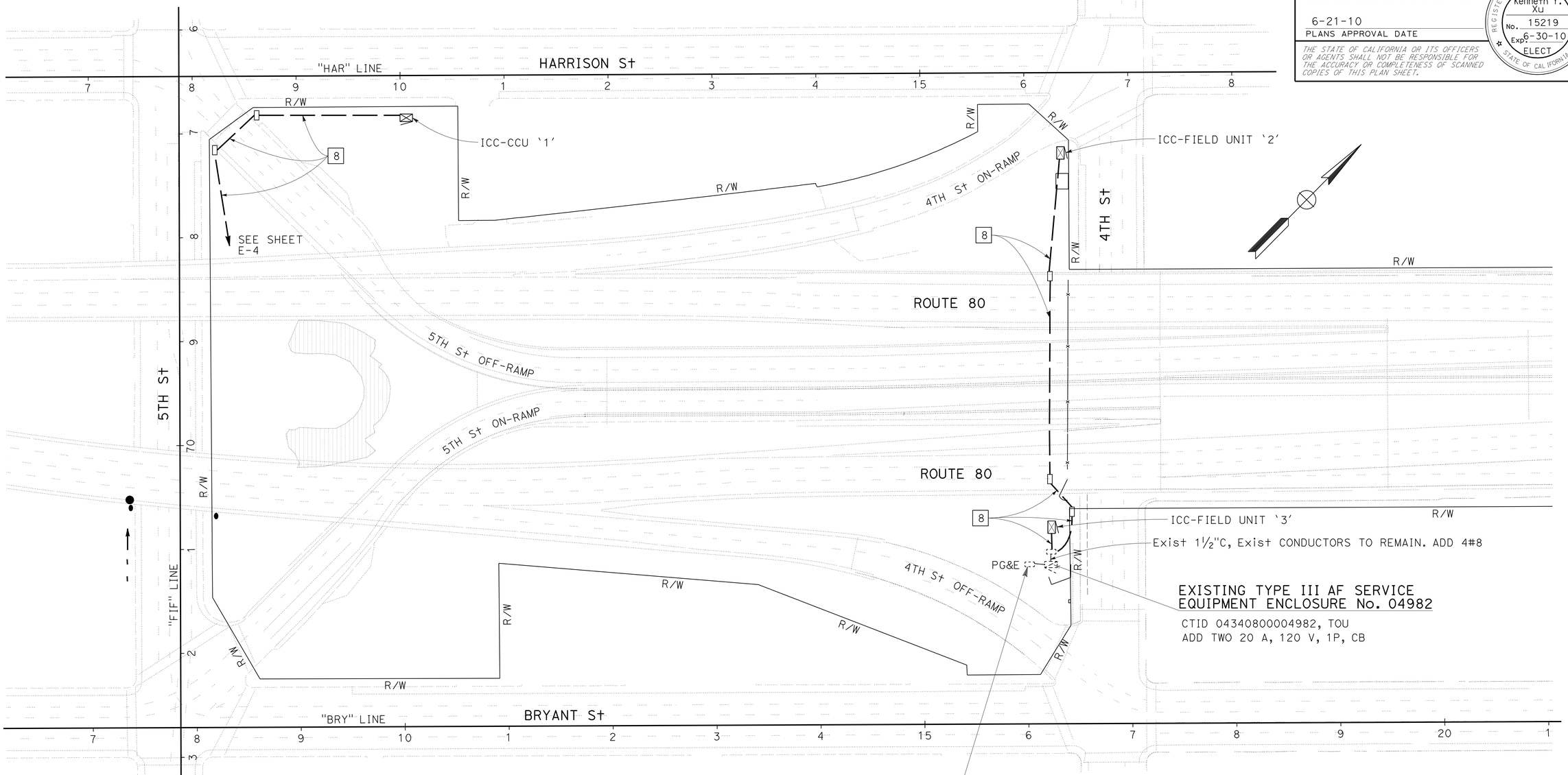

ELECTRIC SERVICE (IRRIGATION)
(ICC-CCU 1, FIELD UNIT '2' AND '3')

SCALE: 1" = 50'

THIS PLAN IS ACCURATE FOR ELECTRICAL WORK ONLY

FOR NOTES, ABBREVIATIONS AND LEGEND, SEE SHEET E-1

E-2

HQG	4/6/10
REVISED BY	DATE REVISED
HENRY Q. GU	KENNETH Y. XU
CALCULATED-DESIGNED BY	CHECKED BY
FUNCTIONAL SUPERVISOR	LAI HONG CHIU

STATE OF CALIFORNIA - DEPARTMENT OF TRANSPORTATION — Caltrans — ELECTRICAL

LAST REVISION 06-08-10 | DATE PLOTTED => 02-JUL-2010 | TIME PLOTTED => 08:50

Dist	COUNTY	ROUTE	POST MILES TOTAL PROJECT	SHEET No.	TOTAL SHEETS
04	SF	80	4.9/5.9	83	127

Kenneth Y. Xu 4-19-10
REGISTERED ELECTRICAL ENGINEER DATE

6-21-10
PLANS APPROVAL DATE

REGISTERED PROFESSIONAL ENGINEER Kenneth Y. Xu No. 15219 Exp. 6-30-10 ELECT STATE OF CALIFORNIA

THE STATE OF CALIFORNIA OR ITS OFFICERS OR AGENTS SHALL NOT BE RESPONSIBLE FOR THE ACCURACY OR COMPLETENESS OF SCANNED COPIES OF THIS PLAN SHEET.

FOR ACCURATE RIGHT OF WAY AND ACCESS DATA, CONTACT RIGHT OF WAY ENGINEERING AT THE DISTRICT OFFICE.

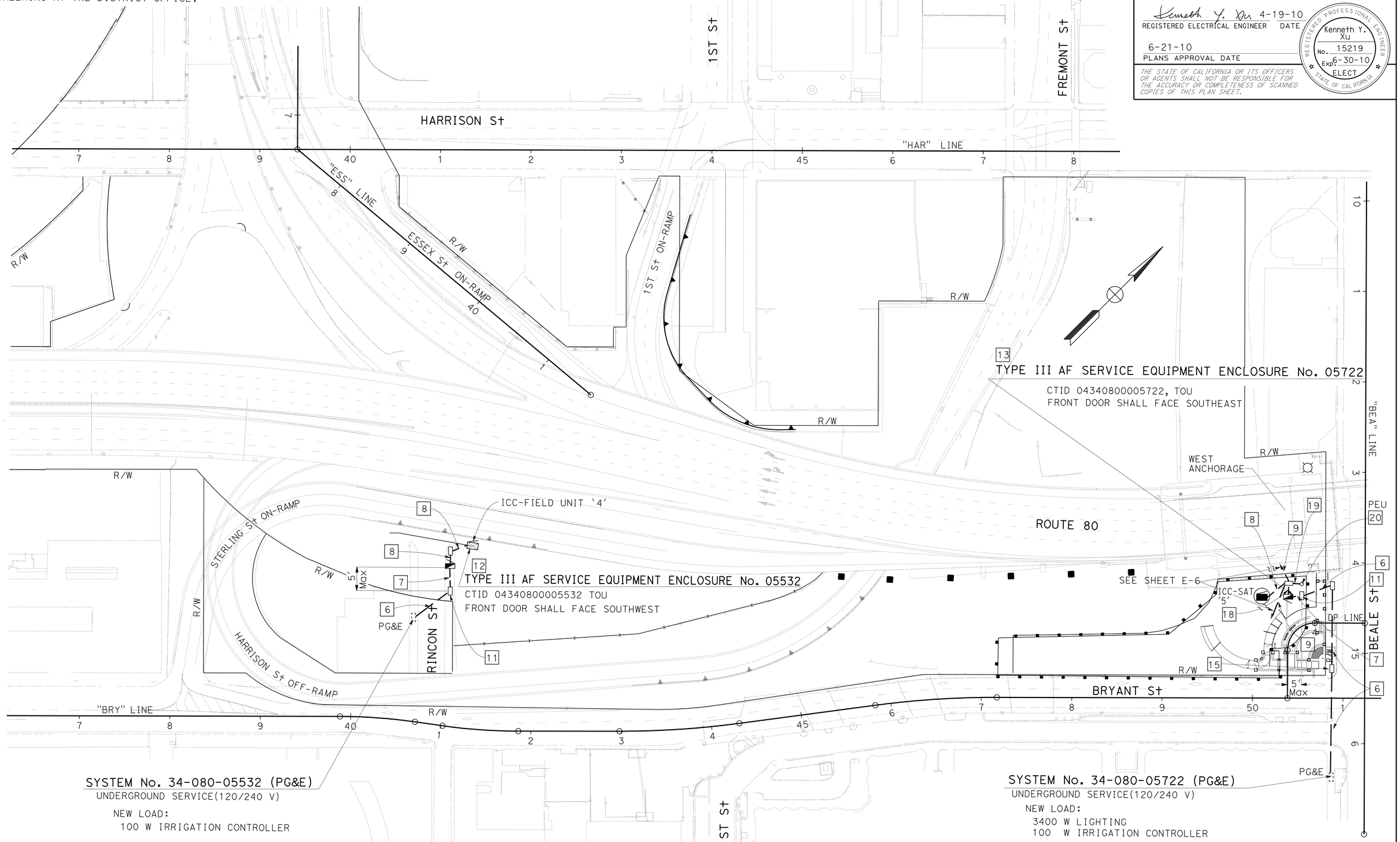

THIS PLAN IS ACCURATE FOR ELECTRICAL WORK ONLY

FOR NOTES, ABBREVIATIONS AND LEGEND, SEE SHEET E-1

ELECTRIC SERVICE (IRRIGATION)
(ICC-FIELD UNIT '4', SAT '5')

SCALE: 1" = 50'

E-3

REVISED BY	DATE REVISED
HQG	4/6/10

CALCULATED-DESIGNED BY: HENRY Q. GU
CHECKED BY: KENNETH Y. XU
FUNCTIONAL SUPERVISOR: LAI HONG CHIU

STATE OF CALIFORNIA - DEPARTMENT OF TRANSPORTATION
Caltrans
ELECTRICAL

LAST REVISION 06-08-10 | DATE PLOTTED => 28-JUN-2010 | TIME PLOTTED => 07:03

Dist	COUNTY	ROUTE	POST MILES TOTAL PROJECT	SHEET No.	TOTAL SHEETS
04	SF	80	4.9/5.9	84	127

REGISTERED ELECTRICAL ENGINEER — DATE: 4-19-10

6-21-10
PLANS APPROVAL DATE

REGISTERED PROFESSIONAL ENGINEER — Kenneth Y. Xu — No. 15219 — Exp 6-30-10 — ELECT — STATE OF CALIFORNIA

THE STATE OF CALIFORNIA OR ITS OFFICERS OR AGENTS SHALL NOT BE RESPONSIBLE FOR THE ACCURACY OR COMPLETENESS OF SCANNED COPIES OF THIS PLAN SHEET.

FOR ACCURATE RIGHT OF WAY AND ACCESS DATA, CONTACT RIGHT OF WAY ENGINEERING AT THE DISTRICT OFFICE.

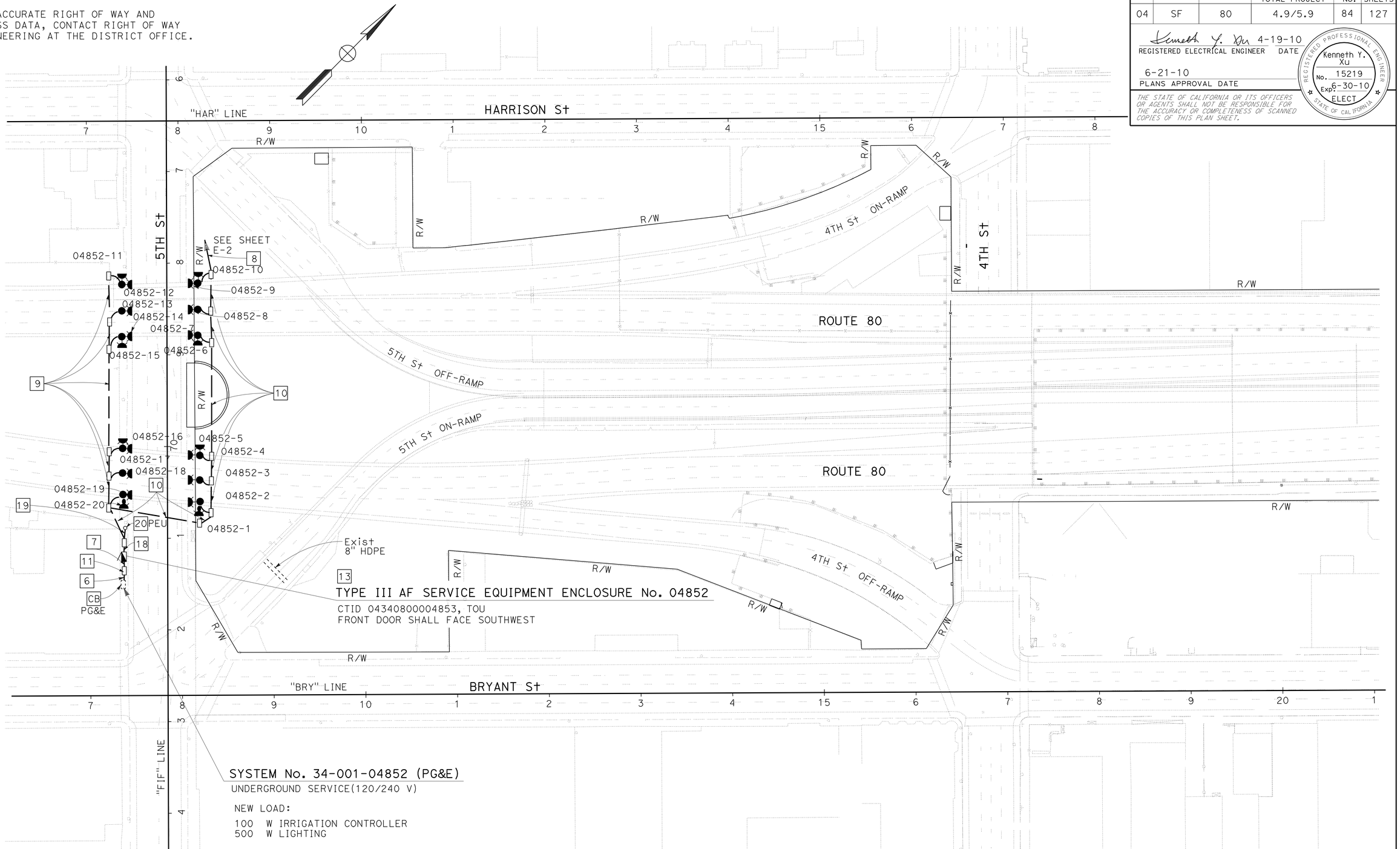

THIS PLAN IS ACCURATE FOR ELECTRICAL WORK ONLY

FOR NOTES, ABBREVIATIONS AND LEGEND, SEE SHEET E-1

LIGHTING (LOCATION 1)

SCALE: 1" = 50'

E-4

REVISED BY	DATE REVISED
HQG	4/6/10

CALCULATED-DESIGNED BY: HENRY Q. GU
CHECKED BY: KENNETH Y. XU
FUNCTIONAL SUPERVISOR: LAI HONG CHIU

STATE OF CALIFORNIA - DEPARTMENT OF TRANSPORTATION
Caltrans
ELECTRICAL

LAST REVISION 06-08-10 | DATE PLOTTED => 28-JUN-2010 | TIME PLOTTED => 07:03

Dist	COUNTY	ROUTE	POST MILES TOTAL PROJECT	SHEET No.	TOTAL SHEETS
04	SF	80	4.9/5.9	85	127

Kenneth Y. Xu 4-19-10
REGISTERED ELECTRICAL ENGINEER DATE

6-21-10
PLANS APPROVAL DATE

REGISTERED PROFESSIONAL ENGINEER Kenneth Y. Xu No. 15219 Exp 6-30-10 ELECT STATE OF CALIFORNIA

THE STATE OF CALIFORNIA OR ITS OFFICERS OR AGENTS SHALL NOT BE RESPONSIBLE FOR THE ACCURACY OR COMPLETENESS OF SCANNED COPIES OF THIS PLAN SHEET.

FOR ACCURATE RIGHT OF WAY AND ACCESS DATA, CONTACT RIGHT OF WAY ENGINEERING AT THE DISTRICT OFFICE.

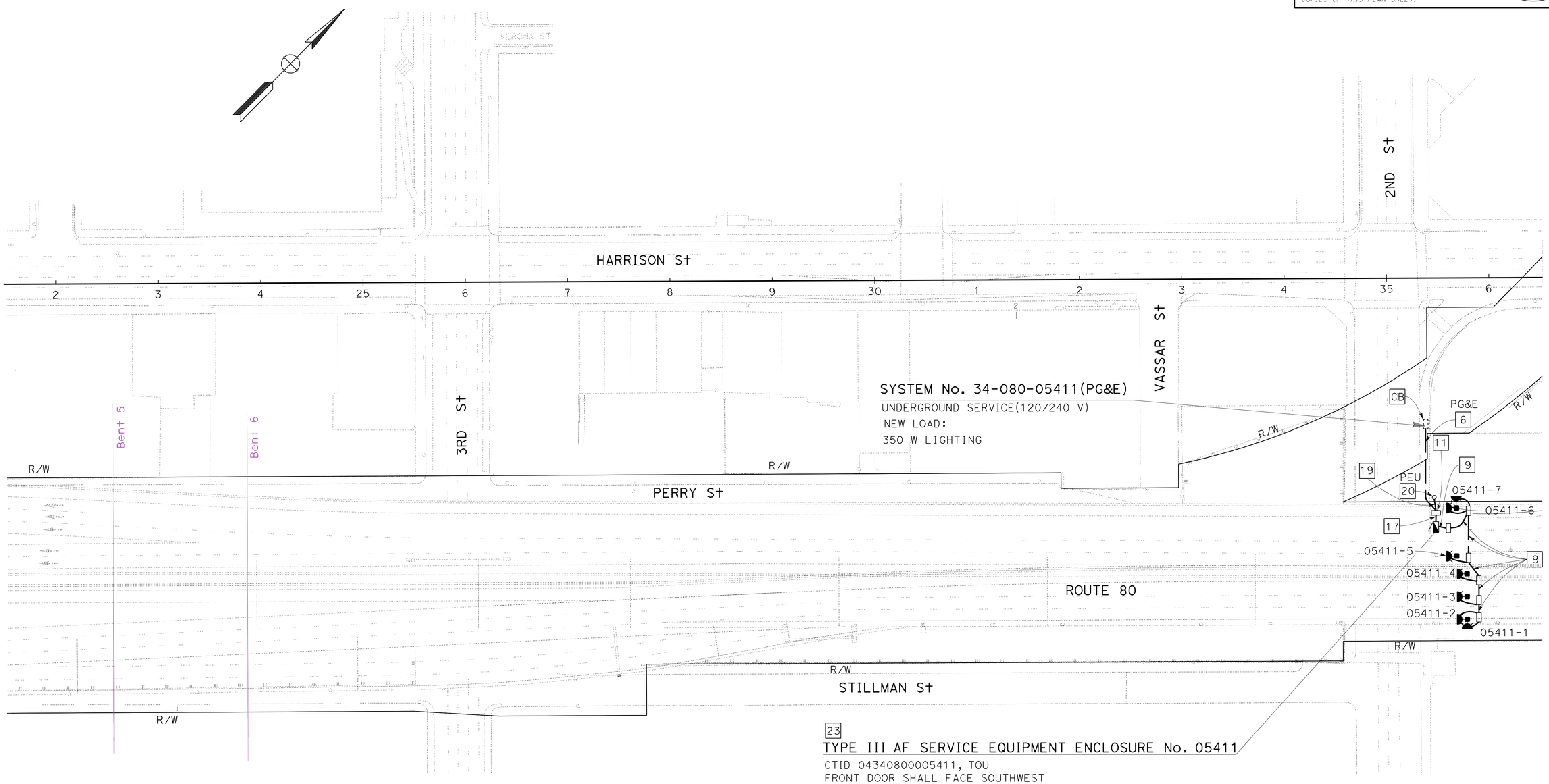

LIGHTING
(LOCATION 2)
SCALE: 1" = 50'

THIS PLAN IS ACCURATE FOR ELECTRICAL WORK ONLY

FOR NOTES, ABBREVIATIONS AND LEGEND, SEE SHEET E-1

E-5

REVISED BY	DATE REVISED
HQG	4/6/10

CALCULATED-DESIGNED BY: HENRY Q. GU
CHECKED BY: KENNETH Y. XU
FUNCTIONAL SUPERVISOR: LAI HONG CHIU

STATE OF CALIFORNIA - DEPARTMENT OF TRANSPORTATION
Caltrans
ELECTRICAL

LAST REVISION 06-09-10
DATE PLOTTED => 28-JUN-2010
TIME PLOTTED => 07:04

Dist	COUNTY	ROUTE	POST MILES TOTAL PROJECT	SHEET No.	TOTAL SHEETS
04	SF	80	4.9/5.9	86	127

Kenneth Y. Xu 4-19-10
REGISTERED ELECTRICAL ENGINEER DATE

6-21-10
PLANS APPROVAL DATE

REGISTERED PROFESSIONAL ENGINEER Kenneth Y. Xu No. 15219 Exp 6-30-10 ELECT STATE OF CALIFORNIA

THE STATE OF CALIFORNIA OR ITS OFFICERS OR AGENTS SHALL NOT BE RESPONSIBLE FOR THE ACCURACY OR COMPLETENESS OF SCANNED COPIES OF THIS PLAN SHEET.

FOR ACCURATE RIGHT OF WAY AND ACCESS DATA, CONTACT RIGHT OF WAY ENGINEERING AT THE DISTRICT OFFICE.

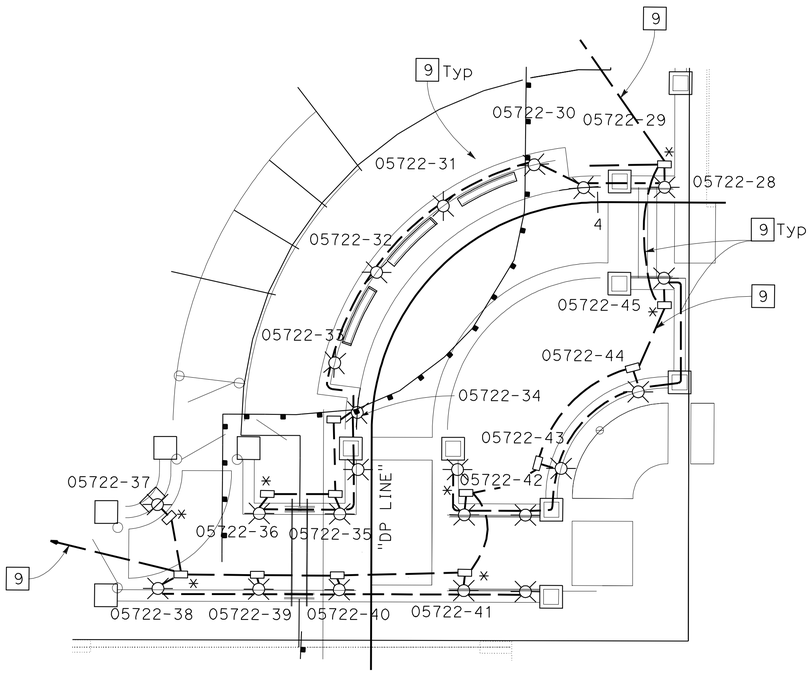

DETAIL A
NO SCALE

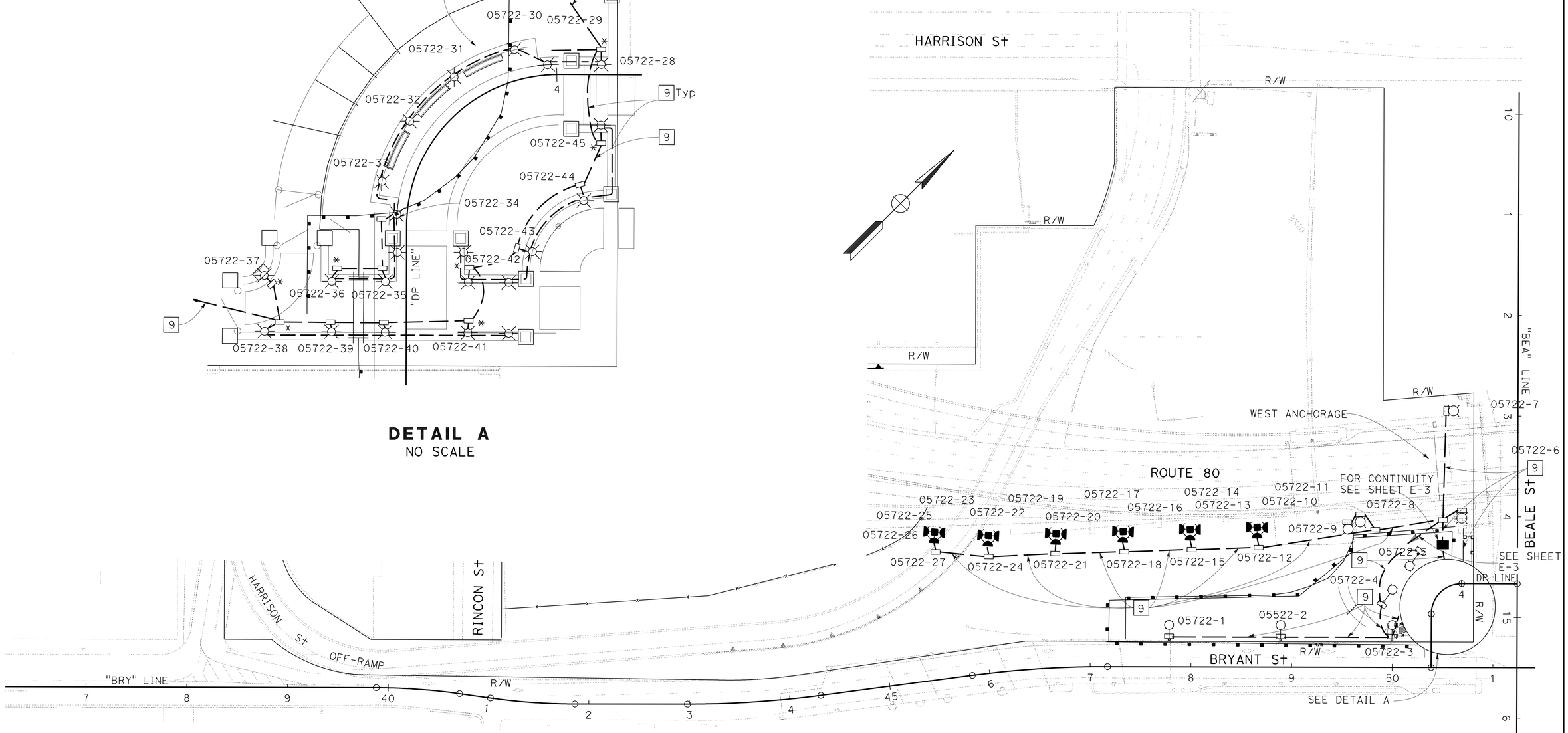

LIGHTING
(LOCATION 3)
SCALE: 1'' = 50'

THIS PLAN IS ACCURATE FOR ELECTRICAL WORK ONLY

FOR NOTES, ABBREVIATIONS AND LEGEND, SEE SHEET E-1

E-6

REVISED BY	DATE REVISED
HQG	4/6/10

HENRY Q. GU — KENNETH Y. XU — CALCULATED-DESIGNED BY — CHECKED BY

FUNCTIONAL SUPERVISOR: LAI HONG CHIU

STATE OF CALIFORNIA - DEPARTMENT OF TRANSPORTATION
ELECTRICAL
Caltrans

LAST REVISION 06-10-10 | DATE PLOTTED => 28-JUN-2010 | TIME PLOTTED => 07:08

Dist	COUNTY	ROUTE	POST MILES TOTAL PROJECT	SHEET No.	TOTAL SHEETS
04	SF	80	4.9/5.9	87	127

Kenneth Y. Xu 4-19-10
REGISTERED ELECTRICAL ENGINEER DATE

6-21-10
PLANS APPROVAL DATE

REGISTERED PROFESSIONAL ENGINEER Kenneth Y. Xu No. 15219 Exp 6-30-10 ELECT STATE OF CALIFORNIA

THE STATE OF CALIFORNIA OR ITS OFFICERS OR AGENTS SHALL NOT BE RESPONSIBLE FOR THE ACCURACY OR COMPLETENESS OF SCANNED COPIES OF THIS PLAN SHEET.

FOR ACCURATE RIGHT OF WAY AND ACCESS DATA, CONTACT RIGHT OF WAY ENGINEERING AT THE DISTRICT OFFICE.

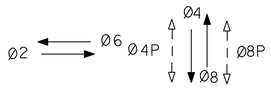

EXISTING PHASE DIAGRAM

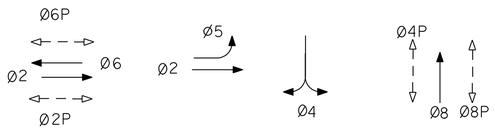

PROPOSED PHASE DIAGRAM

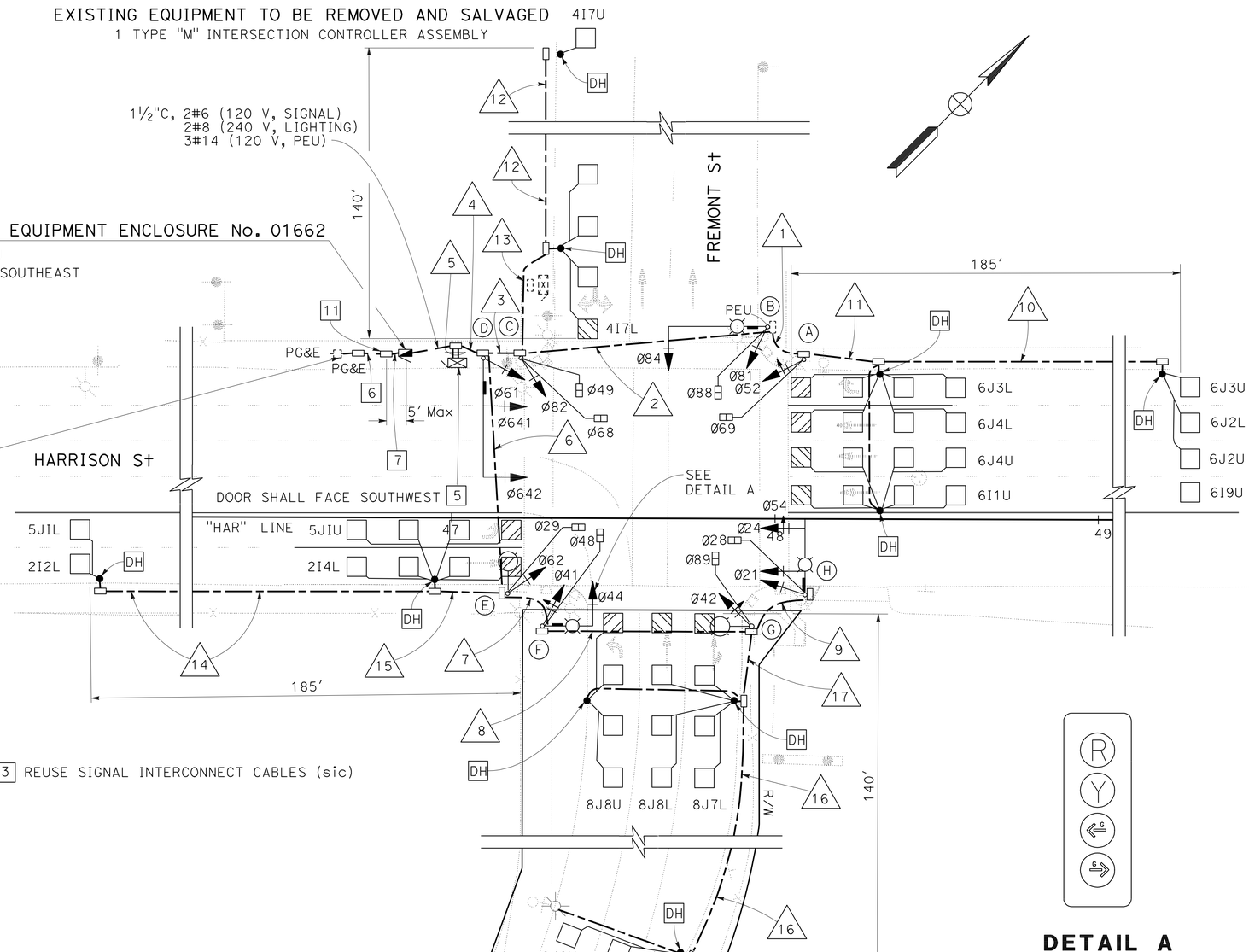

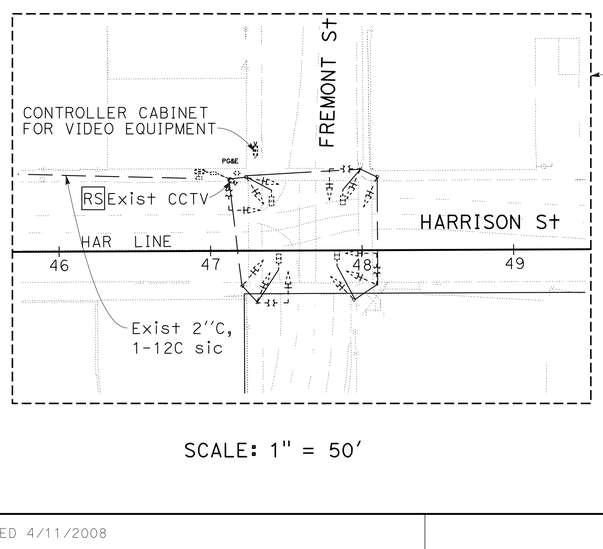

2 3 REUSE SIGNAL INTERCONNECT CABLES (sic)

SCALE: 1" = 50'

DETAIL A
NO SCALE

MODIFY SIGNAL AND LIGHTING (LOCATION 1) FREMONT STREET/HARRISON STREET

SCALE: AS SHOWN

THIS PLAN IS ACCURATE FOR ELECTRICAL WORK ONLY

FOR NOTES, ABBREVIATIONS AND LEGEND, SEE SHEET E-1

E-7

REVISED BY	DATE REVISED
HQG	4/6/10

HENRY Q. GU — KENNETH Y. XU — CALCULATED-DESIGNED BY — CHECKED BY

FUNCTIONAL SUPERVISOR: LAI HONG CHIU

STATE OF CALIFORNIA - DEPARTMENT OF TRANSPORTATION — Caltrans — ELECTRICAL

LAST REVISION 06-10-10 — DATE PLOTTED => 28-JUN-2010 — TIME PLOTTED => 07:03

Dist	COUNTY	ROUTE	POST MILES TOTAL PROJECT	SHEET No.	TOTAL SHEETS
04	SF	80	4.9/5.9	88	127

REGISTERED ELECTRICAL ENGINEER 4-19-10 DATE

6-21-10
PLANS APPROVAL DATE

REGISTERED PROFESSIONAL ENGINEER Kenneth Y. Xu No. 15219 Exp 6-30-10 ELECT STATE OF CALIFORNIA

THE STATE OF CALIFORNIA OR ITS OFFICERS OR AGENTS SHALL NOT BE RESPONSIBLE FOR THE ACCURACY OR COMPLETENESS OF SCANNED COPIES OF THIS PLAN SHEET.

CONDUCTOR SCHEDULE

CONDUCTOR DESIGNATION	NUMBER OF CONDUCTORS — RUN NUMBER 1	2	3	4	5	6	7	8	9	10	11	12	13	14	15	16	17
#14 CONDUCTORS																	
Ø2				12	12	8	8	8	8								
Ø4				12	12	12	12	4									
Ø5	4	4	4	8	8	4	4	4	4								
Ø6				12	12	4											
Ø8		8	12	12	12												
Ø2P				4	4	4	2	2	2								
Ø4P			2	4	4	2	2										
Ø6P	2	2	4	4	4												
Ø8P		2	2	4	4	2	2	2									
PPB(Ø2)				4	4	4	4	2									
PPB(Ø4)			2	4	4	2											
PPB(Ø6)		2	4	4	4												
PPB(Ø8)	2	2	2	4	4	2	2	2	2								
PEU		3	3	3	3												
IISNS		2	2	4	4	2	2	2	2								
SPARE	4	8	12	32	36	16	12	8	4								
TOTAL #14	12	33	49	127	131	62	50	34	22								
#8 CONDUCTORS																	
LIGHTING (240 V)		2	2	4	4	2	2	2	2	2							
SIGNAL NEUTRAL (120 V)	1	1	1	2	2	1	1	1	1								
TOTAL #8	1	3	3	6	6	3	3	3	3	2							
DETECTOR CABLES (TYPE B)																	
2I4L				1	1	1								1	1		
2I2L				1	1	1									1		
5J1L				1	1	1								1	1		
5J1U				1	1	1									1		
4I7L			1	1	1								1				
4I7U			1	1	1							1	1				
6J2L				1	1	1	1	1	1	1							
6J2U				1	1	1	1	1	1	1							
6J3L	1	1	1	1	1						1						
6J3U				1	1	1	1	1	1	1							
6J4L	1	1	1	1	1						1						
6J4U	1	1	1	1	1						1						
6I1U	1	1	1	1	1						1						
6I9U				1	1	1	1	1	1	1							
8J6L				1	1	1	1	1								1	1
8J6U				1	1	1	1	1								1	1
8J7L				1	1	1	1	1									1
8J7U				1	1	1	1	1								1	1
8J8L				1	1	1	1	1									1
8J8U				1	1	1	1	1									1
TOTAL DETECTOR CABLES	4	4	6	20	20	14	10	10	4	4	4	1	2	2	4	3	6
CONDUIT SIZE (INCHES)	2	3	2-3	3-3	3-3	2-3	2-3	3	2½	2	1½	1½	1½	1½	1½	1½	1½

POLE AND EQUIPMENT SCHEDULE

LOCATION	STANDARD TYPE	STANDARD SMA (FEET)	STANDARD LMA (FEET)	VEH. SIGNAL MOUNTING MAST ARM	VEH. SIGNAL MOUNTING POLE	PED SIGNAL MOUNTING	PPB Ø	HPS LUMINAIRE (WATTS)	SPECIAL REQUIREMENT *
A	1-A				TV-1-TA	SP-1-T	88		
B	19-2-100	30	8	MAS	SV-1-T	SP-1-T	69	200	INSTALL 8' IISNS MESSAGE: HARRISON St
C	1-A				TV-1-T	SP-2-T			
D	23-3-100	35	8	MAS MAS	SV-2-TA				INSTALL 8' IISNS MESSAGE: FREMONT St
E	15TS		8		SV-1-T	SP-1-T		200	
F	17-2-100	15	8	MAS	SV-1-T	SP-1-T		200	INSTALL 8' IISNS MESSAGE: HARRISON St
G	15TS		8		SV-1-T	SP-1-T	28	200	
H	19-4-100	25	8	MAS MAS	SV-1-T	SP-1-T	89	200	INSTALL 8' IISNS MESSAGE: FREMONT St

* OTHER REQUIREMENTS ARE COVERED BY NOTES, LEGEND, SPECIAL PROVISIONS AND STANDARD SPECIFICATIONS. FOR TYPE OF STANDARD, VEHICLE AND PEDESTRIAN SIGNAL MOUNTING, SEE STANDARD PLANS.

MODIFY SIGNAL AND LIGHTING
(LOCATION 1)
(CONDUCTOR, POLE AND EQUIPMENT SCHEDULES)

E-8

REVISED BY	DATE REVISED	HENRY Q. GU	KENNETH Y. XU	CALCULATED-DESIGNED BY	CHECKED BY	FUNCTIONAL SUPERVISOR	LAI HONG CHIU
HQG	4/6/10						

STATE OF CALIFORNIA - DEPARTMENT OF TRANSPORTATION
Caltrans
ELECTRICAL

LAST REVISION 06-10-10 | DATE PLOTTED => 28-JUN-2010 | TIME PLOTTED => 07:13

Dist	COUNTY	ROUTE	POST MILES TOTAL PROJECT	SHEET No.	TOTAL SHEETS
04	SF	80	4.9/5.9	89	127

REGISTERED ELECTRICAL ENGINEER — Kenneth Y. Xu — 4-19-10 DATE

6-21-10
PLANS APPROVAL DATE

REGISTERED PROFESSIONAL ENGINEER — Kenneth Y. Xu — No. 15219 — Exp. 6-30-10 — ELECT — STATE OF CALIFORNIA

THE STATE OF CALIFORNIA OR ITS OFFICERS OR AGENTS SHALL NOT BE RESPONSIBLE FOR THE ACCURACY OR COMPLETENESS OF SCANNED COPIES OF THIS PLAN SHEET.

FOR ACCURATE RIGHT OF WAY AND ACCESS DATA, CONTACT RIGHT OF WAY ENGINEERING AT THE DISTRICT OFFICE.

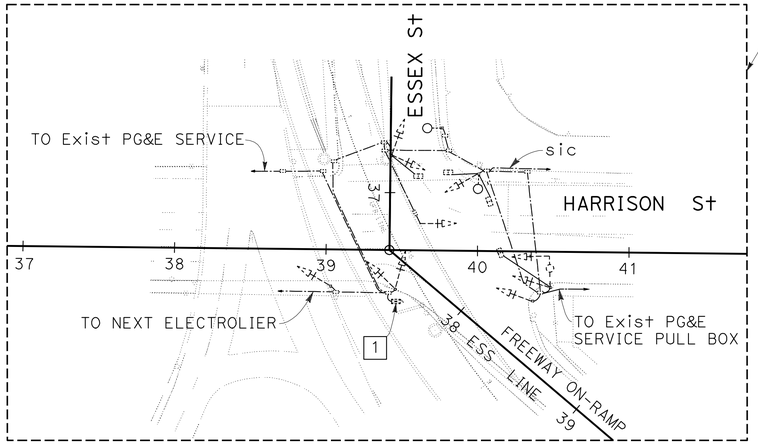

2 3 REUSE SIGNAL INTERCONNECT CABLE (SIC)

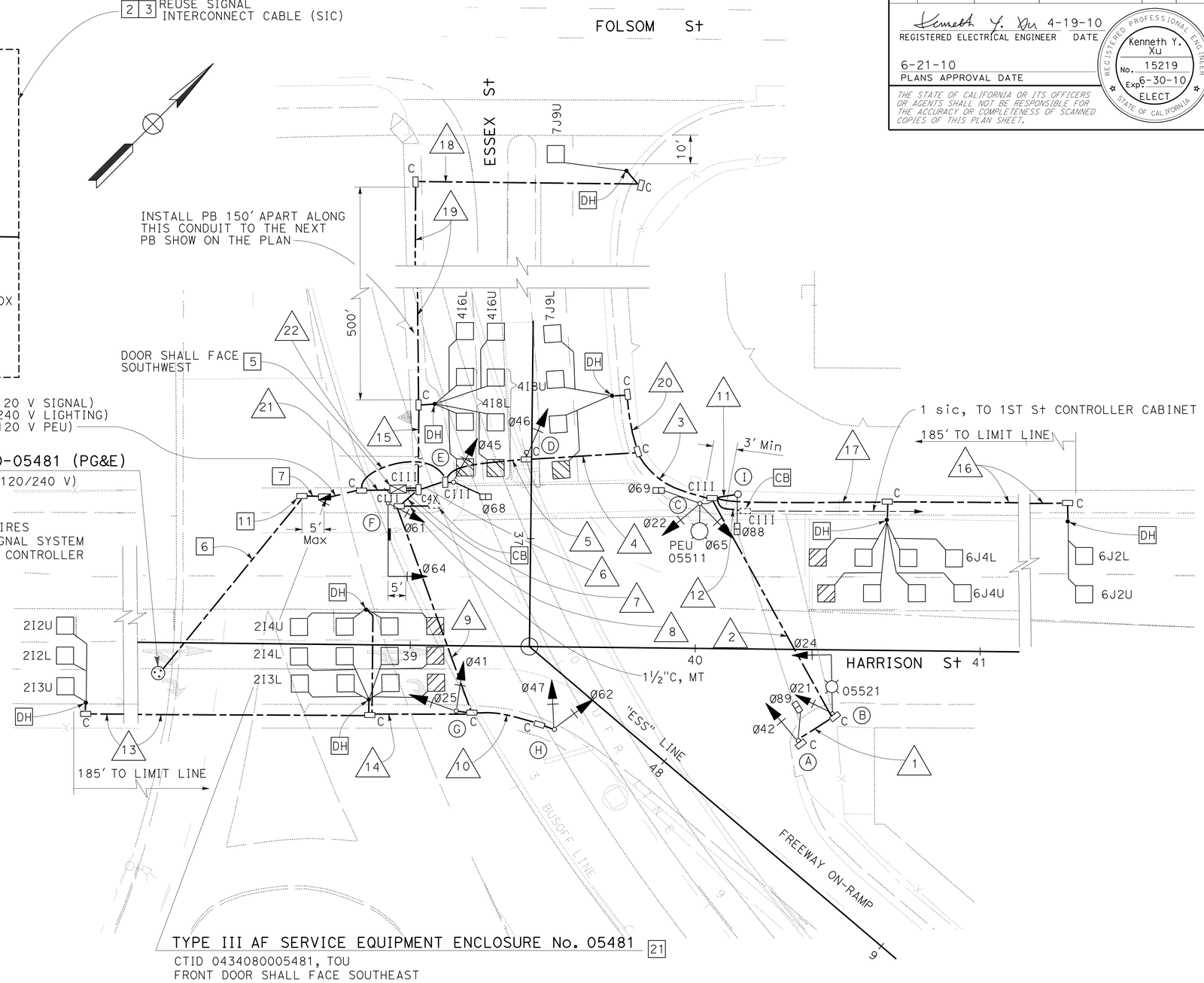

EXISTING PHASE DIAGRAM

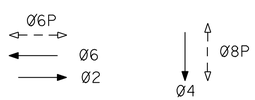

MODIFY SIGNAL AND LIGHTING
(LOCATION 2)
(ESSEX STREET/HARRISON STREET)

SCALE: 1'' = 20'

THIS PLAN IS ACCURATE FOR ELECTRICAL WORK ONLY

FOR NOTES, ABBREVIATIONS AND LEGEND, SEE SHEET E-1

E-9

REVISED BY	DATE REVISED
HQG	4/6/10

CALCULATED-DESIGNED BY: HENRY Q. GU
CHECKED BY: KENNETH Y. XU
FUNCTIONAL SUPERVISOR: LAI HONG CHIU

STATE OF CALIFORNIA - DEPARTMENT OF TRANSPORTATION
Caltrans
ELECTRICAL

LAST REVISION 06-10-10 | DATE PLOTTED => 28-JUN-2010 | TIME PLOTTED => 07:03

Dist	COUNTY	ROUTE	POST MILES TOTAL PROJECT	SHEET No.	TOTAL SHEETS
04	SF	80	4.9/5.9	90	127

REGISTERED ELECTRICAL ENGINEER — DATE: 4-19-10

PLANS APPROVAL DATE: 6-21-10

REGISTERED PROFESSIONAL ENGINEER — Kenneth Y. Xu — No. 15219 — Exp 6-30-10 — ELECT — STATE OF CALIFORNIA

THE STATE OF CALIFORNIA OR ITS OFFICERS OR AGENTS SHALL NOT BE RESPONSIBLE FOR THE ACCURACY OR COMPLETENESS OF SCANNED COPIES OF THIS PLAN SHEET.

CONDUCTOR DESIGNATION	NUMBER OF CONDUCTORS — RUN NUMBER 1	2	3	4	5	6	7	8	9	10	11	12	13	14	15	16	17	18	19	20	21	22	23	24	25
No. 14 CONDUCTORS																									
Ø2		8	12	12	12	12	16	4	4																
Ø4	4	4	4	4	8	2	20	8	8	4															
Ø6			4	4	4	4	16	12	4	4															
Ø6P			2	2	2	4	4																		
Ø8P	2	2	4	4	4	4	4				2														
PPB (Ø6P)		2	2	2	2	4	4																		
PPB (Ø8P)	2	2	4	4	4	4	4				2														
PEU			3	3	3																	3			
IISNS							2	2																	
SPARES	4	8	12	12	16	20	32	12	8	4															
TOTAL No. 14	12	26	47	47	55	64	102	38	24	12	4											3			
No. 8 CONDUCTORS																									
LIGHTING (240 V)		2	2	2	2																	2			
SIGNAL NEUTRAL (120V)	1	1	1	1	1	1	2	1	1	1															
TOTAL No. 8	1	3	3	3	3	1	2	1	1	1												2			
No. 6 CONDUCTORS																						2			
120 V SERVICE TO CONTROLLER																					2				
TOTAL No. 6																					2				
DETECTOR CABLES (TYPE B)																									
2I2U							1	1	1				1	1											
2I2L							1	1	1				1	1											
2I3U							1	1	1				1	1											
2I3U							1	1	1					1											
2I4U							1	1	1					1											
2I4L							1	1	1					1											
4I6U							1								1										
4I6L							1								1										
4I8U							1								1										
4I8L							1								1										
6J2U			1	1	1	1	1									1	1								
6J2L			1	1	1	1	1									1	1								
6J4U			1	1	1	1	1										1								
6J4L			1	1	1	1	1										1								
7J9U							1								1			1	1						
7J9L				1	1	1	1													1					
TOTAL DETECTOR CABLES			4	5	5	5	16	6	6				3	6	5	2	4	1	1	1					
SIGNAL INTERCONNECT CABLE (SIC)			1	1	1	1	1					1													
CONDUIT SIZE	1½	2½	2-3	2-3	2-3	2-3	3-3	3	2½	1½	1½	1½	1½	1½	1½	1½	1½	1½	1½	1½	1½	1½			

POLE AND EQUIPMENT SCHEDULE

LOCATION	STANDARD TYPE	STANDARD SMA (ft)	STANDARD LMA (ft)	VEH SIGNAL MOUNTING MAST ARM	VEH SIGNAL MOUNTING POLE	PED SIGNAL MOUNTING	PPB Ø	HPS LUMINAIRE (WATTS)	SPECIAL REQUIREMENT *
A	16-1-100				SV-1-T	SP-1-T	8		NO SMA REQUIRED
B	17-3-100	20	8	MAS	SV-1-T			200	
C	15TS		8		SV-2-T	SP-1-T	6	200	
D	16-1-100				SV-1-T				NO SMA REQUIRED
E	1-A				SV-1-T	TP-1-T			
F	18-4-100	25		MAS	SV-2-T	SP-1-T	6		INSTALL 8' IISNS MESSAGE: ESSEX St
G	1-A				TV-2-T				
H	16-1-100				SV-2-T				NO SMA REQUIRED
I	1-A					TP-1-T	2-8		INSTALL 2 PPB FOR Ø8 (BACK TO BACK INSTALLATION)

* OTHER REQUIREMENTS ARE COVERED BY NOTES, LEGEND, SPECIAL PROVISIONS AND STANDARD SPECIFICATIONS. FOR TYPE OF STANDARD, VEHICLE AND PEDESTRIAN SIGNAL MOUNTING, SEE STANDARD PLANS.

MODIFY SIGNAL AND LIGHTING
(LOCATION 2)
(CONDUCTOR, POLE AND EQUIPMENT SCHEDULES)

E-10

HQG 4/6/10 — REVISED BY — DATE REVISED

HENRY Q. GU — KENNETH Y. XU — CALCULATED-DESIGNED BY — CHECKED BY

FUNCTIONAL SUPERVISOR: LAI HONG CHIU

STATE OF CALIFORNIA - DEPARTMENT OF TRANSPORTATION — ELECTRICAL — Caltrans

LAST REVISION 06-10-10 — DATE PLOTTED => 02-JUL-2010 — TIME PLOTTED => 08:50

Dist	COUNTY	ROUTE	POST MILES TOTAL PROJECT	SHEET No.	TOTAL SHEETS
04	SF	80	4.9/5.9	91	127

REGISTERED ELECTRICAL ENGINEER — DATE: 4-19-10

6-21-10
PLANS APPROVAL DATE

REGISTERED PROFESSIONAL ENGINEER — Kenneth Y. Xu — No. 15219 — Exp 6-30-10 — ELECT — STATE OF CALIFORNIA

THE STATE OF CALIFORNIA OR ITS OFFICERS OR AGENTS SHALL NOT BE RESPONSIBLE FOR THE ACCURACY OR COMPLETENESS OF SCANNED COPIES OF THIS PLAN SHEET.

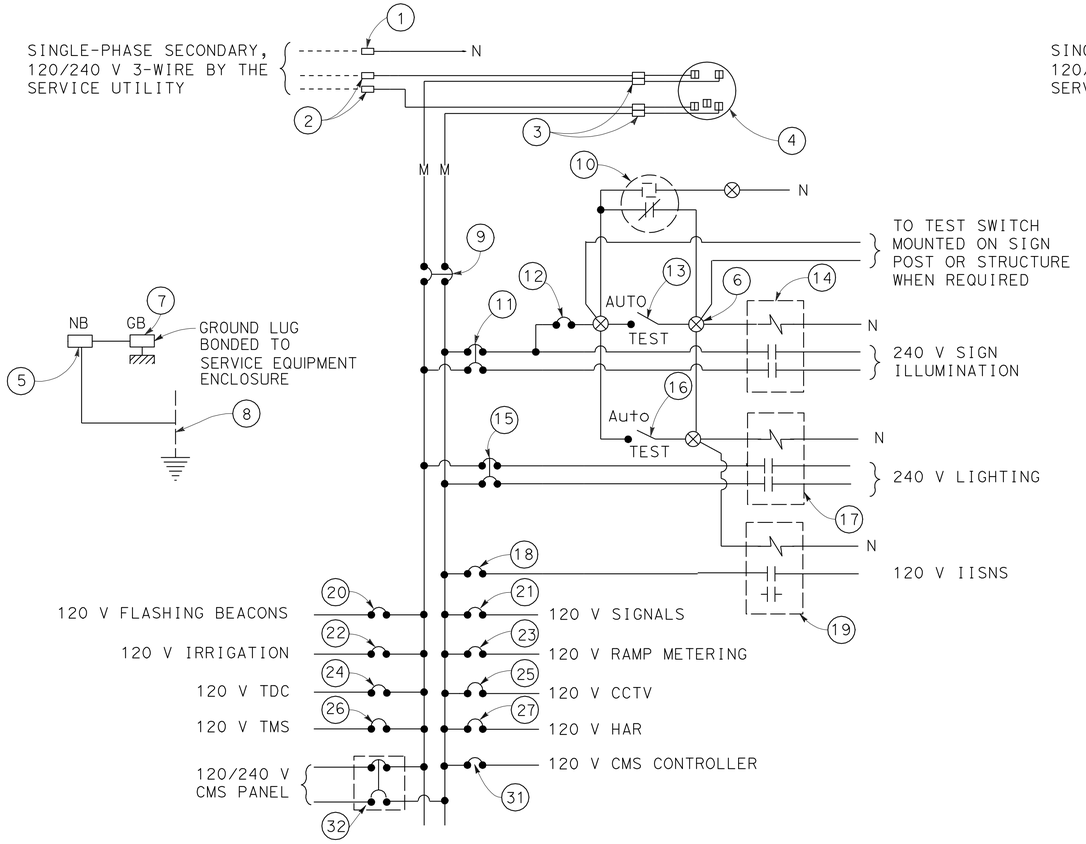

120/240 V SERVICE WIRING DIAGRAM (TYPICAL)

(FOR CIRCUITS WITH BOTH SIGN ILLUMINATION AND LIGHTING)

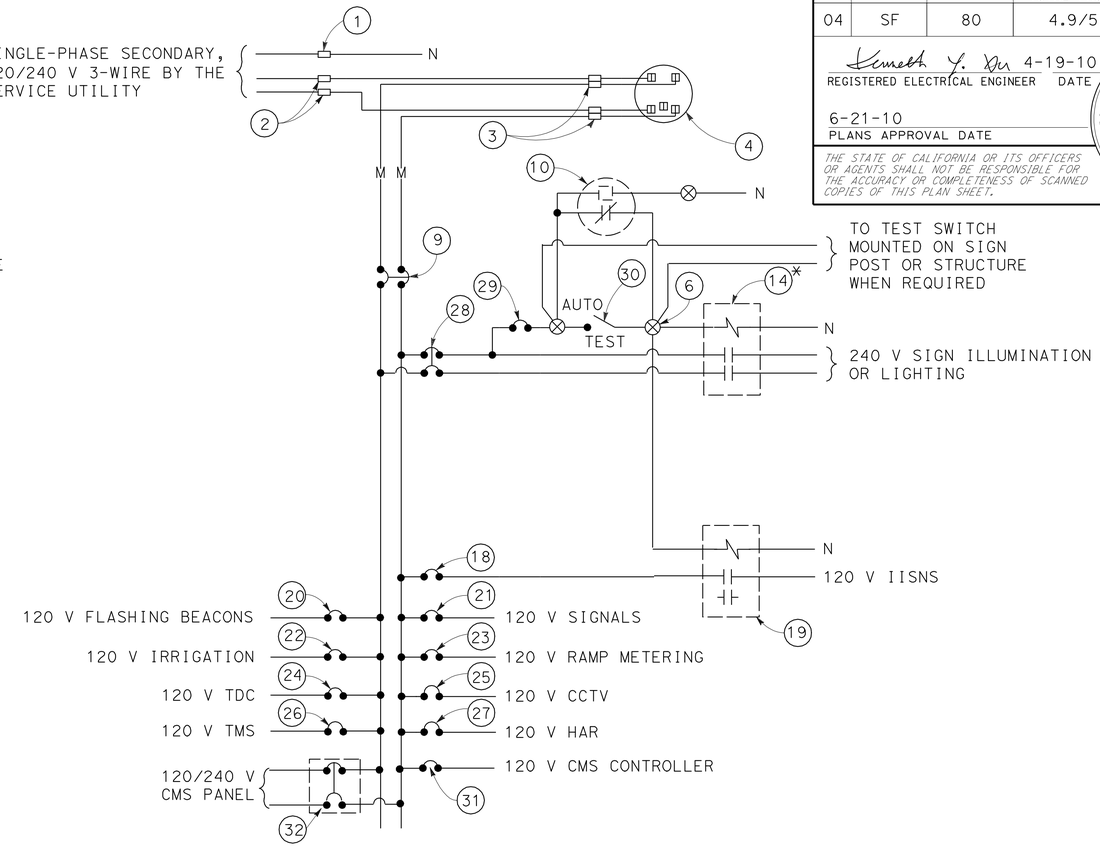

120/240 V SERVICE WIRING DIAGRAM (TYPICAL)

(FOR CIRCUIT ONLY WITH SIGN ILLUMINATION OR LIGHTING)

TYPE III-A SERVICE (120/240 V) EQUIPMENT LEGEND

ITEM No.	COMPONENT	NAMEPLATE DESCRIPTION
1	NEUTRAL LUG	
2	LANDING LUG	
3	TEST BYPASS FACILITY	
4	METER SOCKET AND SUPPORT	
5	NEUTRAL BUS	
6	TERMINAL BLOCK	
7	GROUND BUS	
8	GROUNDING ELECTRODE	
9	100 A, 240 V, 2P, CB	MAIN BREAKER
10	PHOTOELECTRIC UNIT (NOTE 7)	
11	30 A, 240 V, 2P, CB	SIGN ILLUMINATION
12	15 A, 120 V, 1P, CB	SIGN ILLUMINATION AND LIGHTING CONTROL
13	15 A, 1P, TEST SWITCH	SIGN ILLUMINATION TEST SWITCH
14	30 A, 2PNO, CONTACTOR	SIGN ILLUMINATION
15	30 A, 240 V, 2P, CB	LIGHTING
16	15 A, 1P, TEST SWITCH	LIGHTING TEST SWITCH

ITEM No.	COMPONENT	NAMEPLATE DESCRIPTION
17	30 A, 2PNO, CONTACTOR	LIGHTING
18	15 A, 120 V, 1P, CB	IISNS
19	30 A, 2PNO, CONTACTOR	IISNS
20	15 A, 120 V, 1P, CB	FLASHING BEACON
21	50 A, 120 V, 1P, CB	SIGNALS
22	20 A, 120 V, 1P, CB	IRRIGATION
23	30 A, 120 V, 1P, CB	RAMP METERING
24	15 A, 120 V, 1P, CB	TELEPHONE DEMARCATION CABINET
25	30 A, 120 V, 1P, CB	CCTV
26	30 A, 120 V, 1P, CB	TMS
27	30 A, 120 V, 1P, CB	HAR
28	30 A, 240 V, 2P, CB	SIGN ILLUMINATION *
29	15 A, 120 V, 1P, CB	SIGN ILLUMINATION CONTROL *
30	15 A, 1P, TEST SWITCH	SIGN ILLUMINATION TEST SWITCH *
31	30 A, 120 V, 1P, CB	CMS CONTROLLER
32	30 A, 240 V, 2P, CB	CMS PANEL

* FOR LIGHTING CIRCUIT, WORDS OF "SIGN ILLUMINATION" IN NAMEPLATE DESCRIPTION SHALL BE CHANGED TO "LIGHTING".

LEGEND:

(SEE RSP ES-1A & RSP ES-1C)

NOTES: (FOR SERVICE EQUIPMENT)

1. VOLTAGE RATINGS OF SERVICE EQUIPMENT SHALL CONFORM TO THE SERVICE VOLTAGES INDICATED ON THE PLANS.
2. UNLESS OTHERWISE INDICATED ON THE PLANS, ALL SERVICE EQUIPMENT ITEMS SHALL BE PROVIDED FOR EACH SERVICE EQUIPMENT ENCLOSURE AS SHOWN.
3. ITEM No. 1 AND 5 SHALL BE ISOLATED FROM THE CABINET.
4. METER SOCKETS SHALL BE 5 CLIP TYPE.
5. SERVICE UTILITY WILL INSTALL THE TIME-OF-USE METER IF APPLICABLE.
6. UNLESS OTHERWISE NOTED, THE MAXIMUM NUMBER OF SINGLE-POLE CB SPACES IN THE ENCLOSURE IS FOURTEEN.
7. PHOTOELECTRIC CONTROL SHALL BE TYPE II.

ELECTRICAL DETAILS
(SERVICE EQUIPMENT AND TYPICAL WIRING DIAGRAM TYPE III-A SERIES)

NO SCALE

FOR NOTES, ABBREVIATIONS AND LEGEND, SEE SHEET E-1

STATE OF CALIFORNIA - DEPARTMENT OF TRANSPORTATION — Caltrans — ELECTRICAL

FUNCTIONAL SUPERVISOR: LAI HONG CHIU

CALCULATED-DESIGNED BY: HENRY Q. GU — CHECKED BY: KENNETH Y. XU

REVISED BY: HQG — DATE REVISED: 4/6/10

LAST REVISION 06-08-10 — DATE PLOTTED => 28-JUN-2010 — TIME PLOTTED => 07:03

Dist	COUNTY	ROUTE	POST MILES TOTAL PROJECT	SHEET No.	TOTAL SHEETS
04	SF	80	4.9/5.9	92	127

Kenneth Y. Xu 4-19-10
REGISTERED ELECTRICAL ENGINEER DATE

6-21-10
PLANS APPROVAL DATE

REGISTERED PROFESSIONAL ENGINEER Kenneth Y. Xu No. 15219 Exp. 6-30-10 ELECT STATE OF CALIFORNIA

THE STATE OF CALIFORNIA OR ITS OFFICERS OR AGENTS SHALL NOT BE RESPONSIBLE FOR THE ACCURACY OR COMPLETENESS OF SCANNED COPIES OF THIS PLAN SHEET.

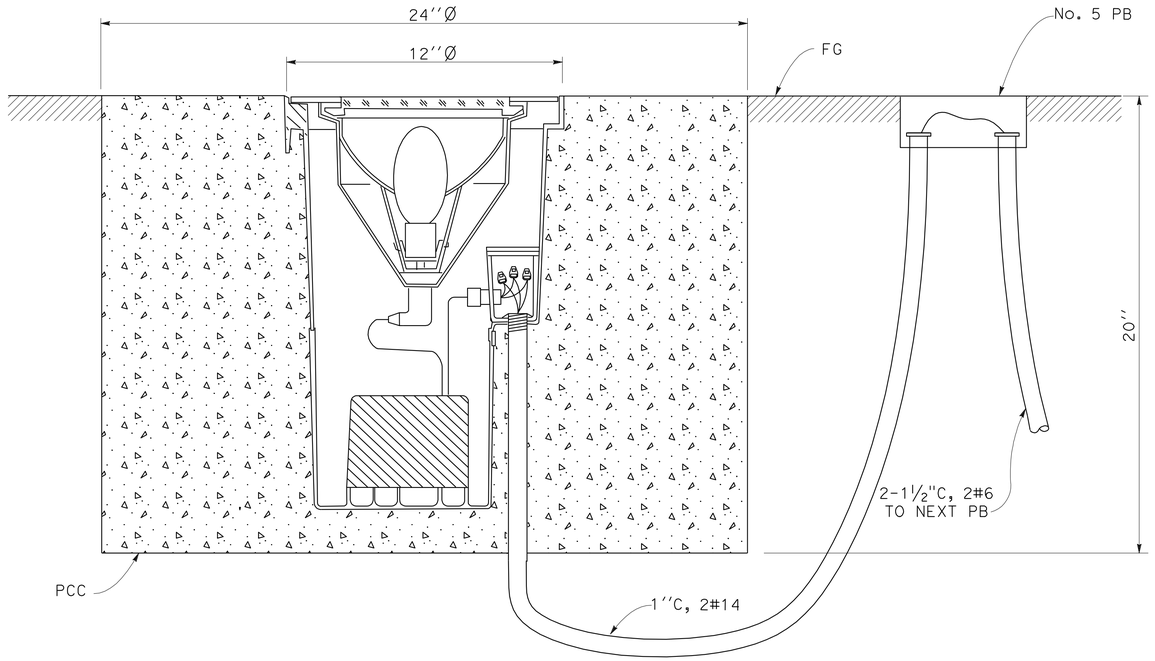

ARCHITECTURAL LIGHT TYPE I MOUNTING DETAIL

DETAIL B

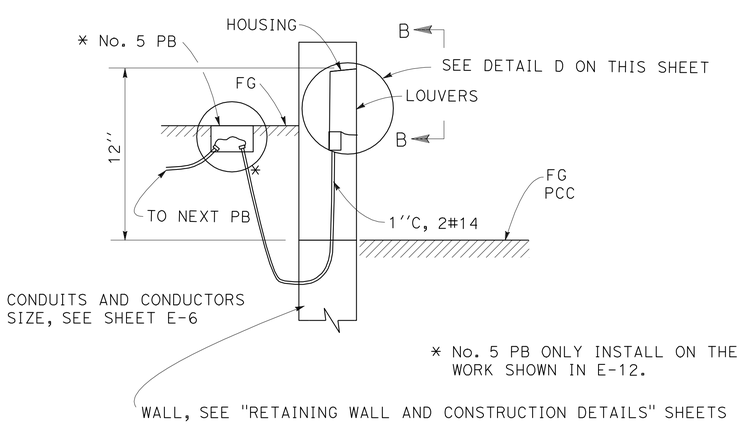

DETAIL C

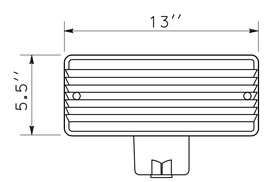

FRONT ELEVATION

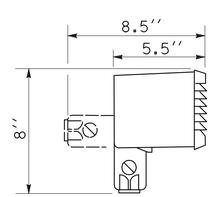

SECTION B-B

DETAIL D

ARCHITECTURAL LIGHT TYPE III MOUNTING DETAIL

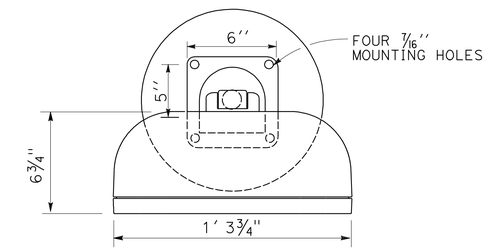

TOP VIEW

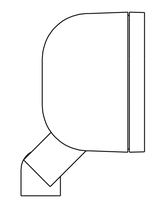

SIDE ELEVATION

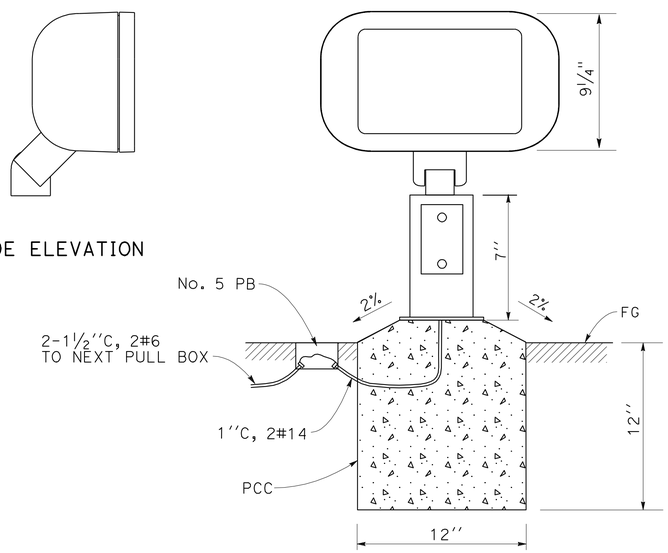

FRONT SECTION

ARCHITECTURAL LIGHT TYPE II MOUNTING DETAIL

DETAIL A

ELECTRICAL DETAILS

NO SCALE

FOR NOTES, ABBREVIATIONS AND LEGEND, SEE SHEET E-1

E-12

HENRY Q. GU	KENNETH Y. XU	REVISED BY	HQG
		DATE REVISED	6/10/10
CALCULATED-DESIGNED BY			
CHECKED BY			
FUNCTIONAL SUPERVISOR	LAI HONG CHIU		

STATE OF CALIFORNIA - DEPARTMENT OF TRANSPORTATION
Caltrans
ELECTRICAL

LAST REVISION 06-14-10
DATE PLOTTED => 28-JUN-2010
TIME PLOTTED => 07:03

Dist	COUNTY	ROUTE	POST MILES TOTAL PROJECT	SHEET No.	TOTAL SHEETS
04	SF	80	4.9/5.9	93	127

Kenneth Y. Xu 4-19-10
REGISTERED ELECTRICAL ENGINEER DATE

6-21-10
PLANS APPROVAL DATE

REGISTERED PROFESSIONAL ENGINEER Kenneth Y. Xu No. 15219 Exp. 6-30-10 ELECT STATE OF CALIFORNIA

THE STATE OF CALIFORNIA OR ITS OFFICERS OR AGENTS SHALL NOT BE RESPONSIBLE FOR THE ACCURACY OR COMPLETENESS OF SCANNED COPIES OF THIS PLAN SHEET.

PULL BOX IN MID-BLOCK
WHEN INTERCONNECT CONDUITS
ARE UNDER THE SIDEWALK

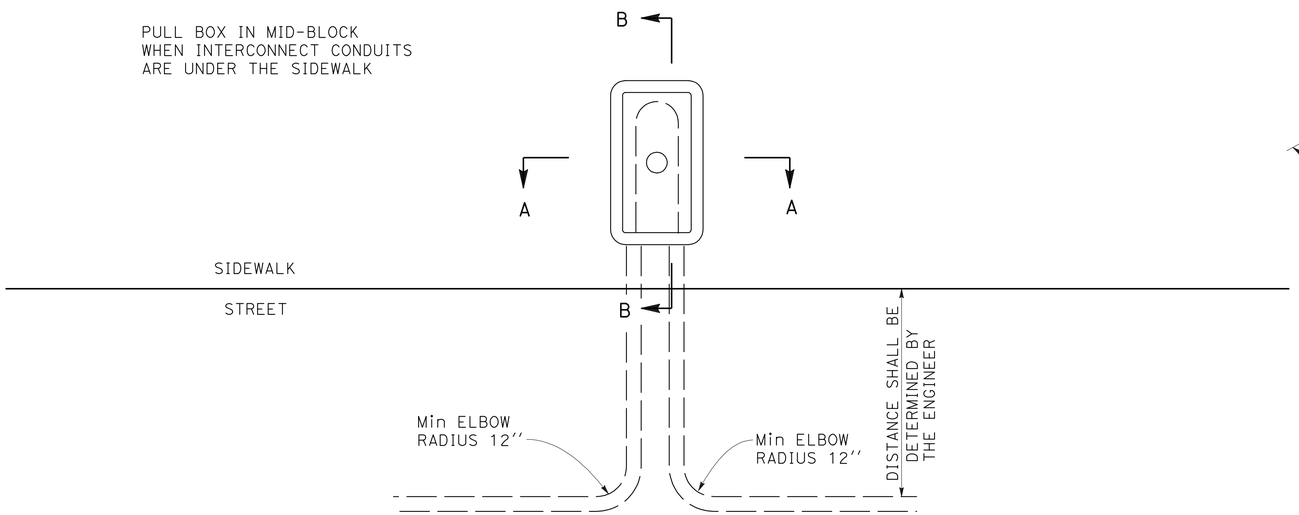

PLAN VIEW DETAILS

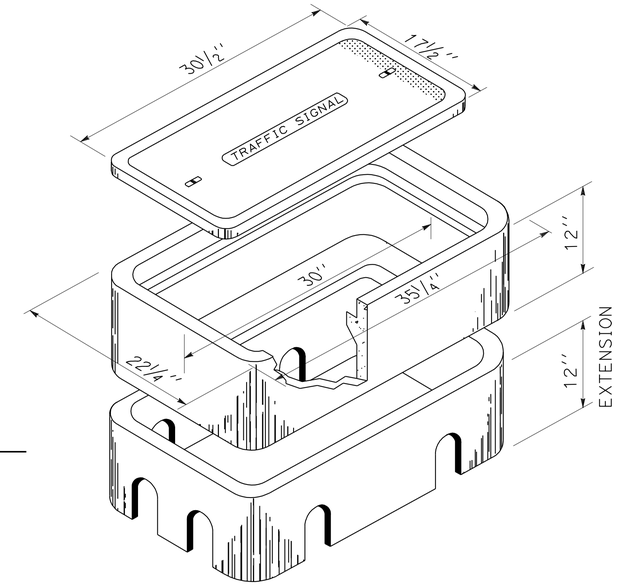

TYPE 3X PULL BOX DETAIL

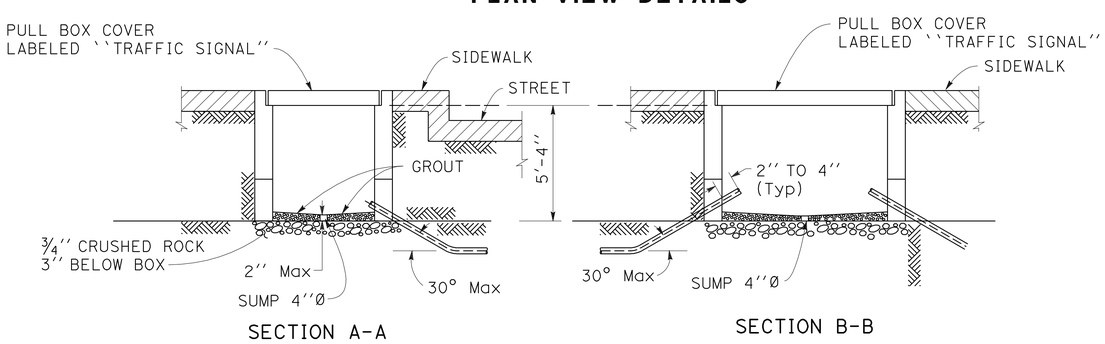

TYPE 3X OR 4X PULL BOX AND CONDUIT DETAIL FOR INTERCONNECT

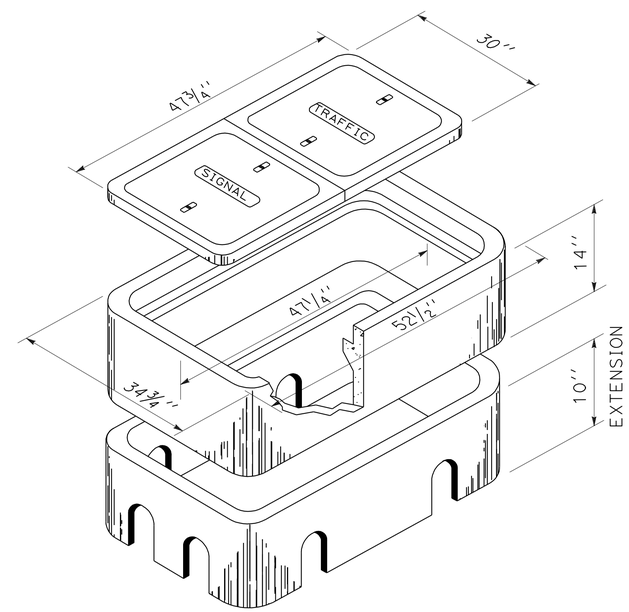

TYPE 4X PULL BOX DETAIL

ELECTRICAL DETAILS
CITY AND COUNTY OF SAN FRANCISCO
PULL BOX DETAILS

NO SCALE

E-13

REVISED BY	DATE REVISED
HQG	4/6/10

CALCULATED-DESIGNED BY: HENRY Q. GU
CHECKED BY: KENNETH Y. XU
FUNCTIONAL SUPERVISOR: LAI HONG CHIU

STATE OF CALIFORNIA - DEPARTMENT OF TRANSPORTATION
Caltrans
ELECTRICAL

LAST REVISION 04-18-10 | DATE PLOTTED => 28-JUN-2010 | TIME PLOTTED => 07:03

Dist	COUNTY	ROUTE	POST MILES TOTAL PROJECT	SHEET No.	TOTAL SHEETS
04	SF	80	4.9/5.9	94	127

Kenneth Y. Xu 4-19-10
REGISTERED ELECTRICAL ENGINEER DATE

6-21-10
PLANS APPROVAL DATE

REGISTERED PROFESSIONAL ENGINEER Kenneth Y. Xu No. 15219 Exp 6-30-10 ELECT STATE OF CALIFORNIA

THE STATE OF CALIFORNIA OR ITS OFFICERS OR AGENTS SHALL NOT BE RESPONSIBLE FOR THE ACCURACY OR COMPLETENESS OF SCANNED COPIES OF THIS PLAN SHEET.

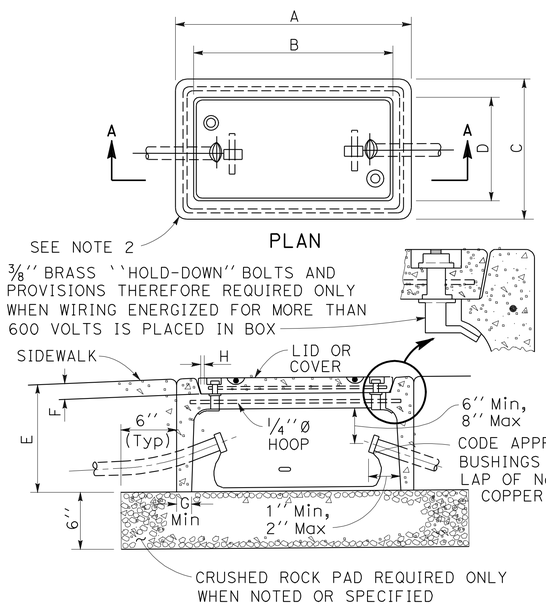

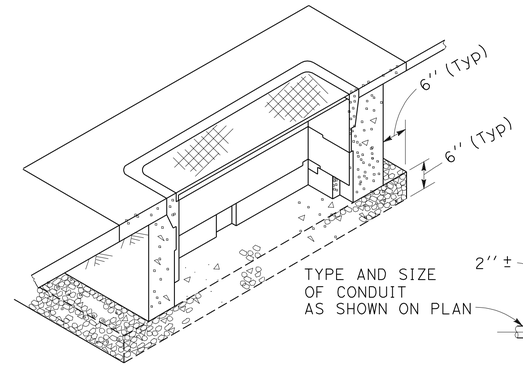

TYPICAL INSTALLATION OF PULL BOX WITH 6'' CONCRETE RETAINING WALL (SEE NOTE 4) AND WITH STEEL TRAFFIC COVER

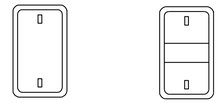

ONE PIECE — 3-PIECE WITH INTERLOCKING CENTER

LIDS
(CONCRETE, REINFORCED)

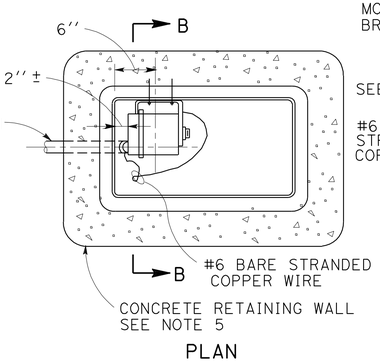

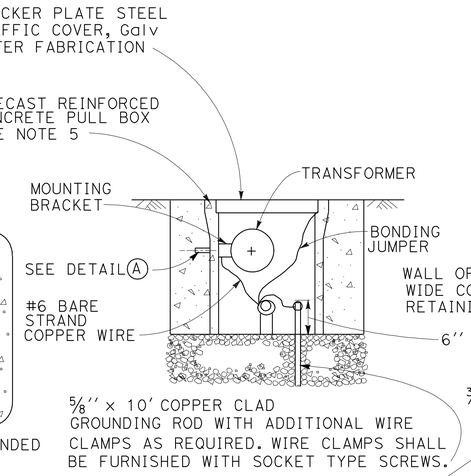

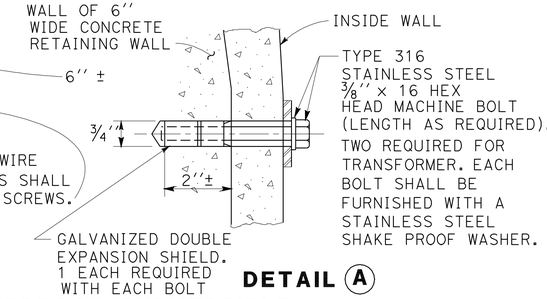

TYPICAL INSTALLATION OF WATERPROOF SUBMERSIBLE TRANSFORMER IN PRECAST PULL BOX

NOTE: PULL BOXES SHALL BE TYPE IV WITH EXTENSIONS FOR MORE THAN 3 TRANSFORMERS. PULL BOXES SHALL BE TYPE III WITH EXTENSIONS FOR 1 TO 3 TRANSFORMERS. SEE PLANS

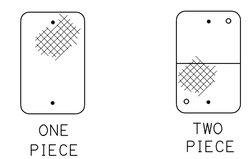

ONE PIECE — TWO PIECE

COVERS
(STEEL, HOT-DIP GALVANIZED AFTER FABRICATION)

TYPE	DIMENSIONS (INCHES)									REMARKS
	A	B	C	D	E	F	G	H Min	H Max	
I	25 1/4	21	15 3/4	11	12	2	1	5/8	3/4	FURNISH WITH LID OR COVER, AS APPLICABLE. SEE NOTES.
II	27 1/4	23 1/2	18	14	12	2	32	5/8	7/8	FURNISH WITH LID OR COVER, AS APPLICABLE. SEE NOTES.
III	35 1/4	31	22 1/4	18	12	2	32	5/8	7/8	FURNISH WITH LID OR COVER, AS APPLICABLE. SEE NOTES.
IV	64 1/4	60 1/4	35	30 1/2	14	52	38	1 1/8	1 5/8	FURNISH WITH THREE PIECE LID OR TWO PIECE STEEL COVER, AS APPLICABLE. SEE NOTES.

PRECAST PULL BOX NOTES:

1. ALL EXPOSED METALLIC PORTION OF THE PULL BOXES SHALL BE CONSTRUCTED WITH FERROUS MATERIALS AND SUCH MATERIALS SHALL BE HOT-DIP GALVANIZED AFTER FABRICATION.
2. PULL BOXES, COVERS AND EXTENSIONS SHALL BE PRECAST REINFORCED CONCRETE. PULL BOXES SHALL HAVE ETCHED POLYETHYLENE FACE ANCHORED IN CONCRETE AND ULTRAVIOLET INHIBITOR.
3. LIDS AND COVERS FURNISHED WITH PULL BOXES ENCLOSING WIRING ENERGIZED WITH VOLTAGES GREATER THAN 600 VOLTS SHALL BE PROVIDED WITH ``HOLD-DOWN'' BOLTS FABRICATED FROM BRASS.
4. PULL BOXES PLACED IN ROADWAYS OR IN AREAS SUBJECT TO VEHICLE AND HEAVY MACHINERY TRAFFIC SHALL BE FURNISHED WITH STEEL CHECKER PLATE TRAFFIC COVERS. IN ADDITION, A 6'' WIDE x 12'' HIGH CONCRETE RETAINING WALL SHALL BE CONSTRUCTED ALL AROUND EACH PULL BOX INSTALLED IN SUCH AREAS.
5. PULL BOXES WHICH ENCLOSE WATERPROOF SUBMERSIBLE TRANSFORMERS SHALL BE FURNISHED WITH 12'' HIGH EXTENSIONS. A 16'' WIDE RETAINING WALL EXTENDING THE FULL HEIGHT OF THE BOX AND EXTENSION SHALL BE CONSTRUCTED AROUND SUCH PULL BOXES.
6. A 12'' WIDE x 3 1/2''DEEP (Min) CONCRETE SLAB SHALL BE CONSTRUCTED ALL AROUND EACH PULL BOX (INCLUDING BOXES PROVIDED WITH 6'' THICK RETAINING WALL SET FORTH IN 4 AND 5 ABOVE) INSTILLED IN UNPAVED OR ASPHALT CONCRETE PAVED AREAS.
7. LIDS AND COVERS SHALL BE PROVIDED WITH THE FOLLOWING LEGENDS, AS APPLICABLE:
   FIRST LINE: ELECTRICAL-DPW D OF E ELECTRICAL TRAFFIC
   SECOND LINE: 120/240 VOLT R & P SIGNALS
   FIRST LINE: ELECTRICAL-DPW ELECTRICAL ELECTRICAL-DPW STREET LIGHTING
   SECOND LINE: 240/480 VOLT HIGH VOLTAGE IRRIGATION SYSTEM 120/240 VOLT
   LETTERS SHALL BE 1'' AND MADE WITH 1/4'' WIDE STROKES. LETTERS INSCRIBED IN CONCRETE LIDS OR COVERS SHALL BE MADE WITH 1/8'' (Min) DEEP IMPRINTS.
8. PROVIDE BONDING JUMPER (3' Min) FOR STEEL COVERS TO BE BONDED TO CONDUIT.

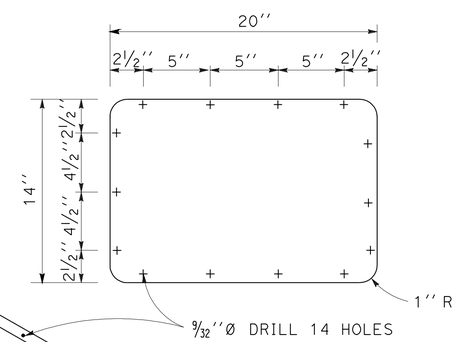

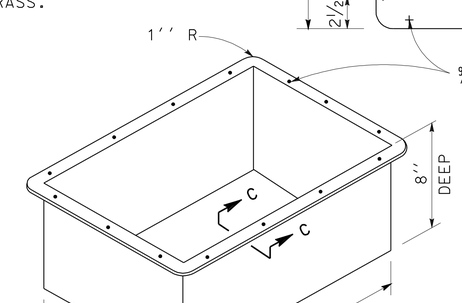

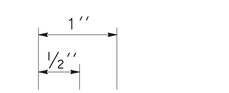

SECTION C-C

BASEMENT PULL BOX AND COVER

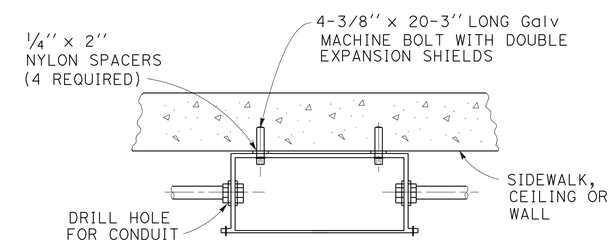

TYPICAL BASEMENT PULL BOX INSTALLATION DETAIL

BASEMENT PULL BOX NOTES:

1. BASEMENT PULL BOX SHALL BE OF 11 GAUGE SHEET STEEL WITH WELDED JOINTS.
2. THE COVER SHALL BE OF 10 GAUGE SHEET STEEL AND SHALL BE FASTENED TO THE BOX WITH 14 ROUND HEAD MACHINE SCREWS AND NUTS.
3. THE PULL BOX COVER SHALL BE HOT-DIP GALVANIZED AFTER FABRICATION.
4. A NEOPRENE GASKET SHALL BE PROVIDED BETWEEN COVER AND PULL BOX.
5. ALL SCREWS, BOLTS, NUTS AND WASHERS SHALL BE TYPE 316 STAINLESS STEEL.

ELECTRICAL DETAILS
CITY AND COUNTY OF SAN FRANCISCO
STANDARD
PULL BOX DETAILS

NO SCALE

E-14

CALCULATED-DESIGNED BY	HQG	REVISED BY	HENRY Q. GU
CHECKED BY	4/6/10	DATE REVISED	KENNETH Y. XU

FUNCTIONAL SUPERVISOR: LAI HONG CHIU

STATE OF CALIFORNIA - DEPARTMENT OF TRANSPORTATION — Caltrans — ELECTRICAL

LAST REVISION 04-18-10 | DATE PLOTTED => 28-JUN-2010 | TIME PLOTTED => 07:03

Dist	COUNTY	ROUTE	POST MILES TOTAL PROJECT	SHEET No.	TOTAL SHEETS
04	SF	80	4.9/5.9	95	127

REGISTERED ELECTRICAL ENGINEER 4-19-10 DATE

6-21-10
PLANS APPROVAL DATE

REGISTERED PROFESSIONAL ENGINEER Kenneth Y. Xu No. 15219 Exp. 6-30-10 ELECT STATE OF CALIFORNIA

THE STATE OF CALIFORNIA OR ITS OFFICERS OR AGENTS SHALL NOT BE RESPONSIBLE FOR THE ACCURACY OR COMPLETENESS OF SCANNED COPIES OF THIS PLAN SHEET.

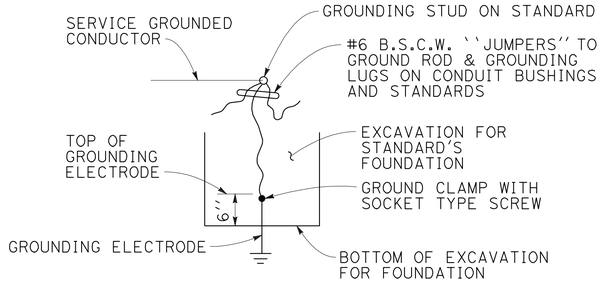

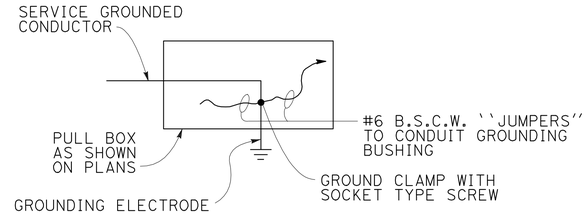

SERVICE GROUNDING NOTES:

1. THE SERVICE GROUNDED CONDUCTOR SHALL BE CONTINUOUS FROM THE SERVICE CONNECTION TO THE GROUND STUD ON THE STANDARD OR GROUNDING ELECTRODE AS SHOWN IN THE TYPES OF SERVICE GROUND.
2. ALL STANDARDS SHALL HAVE GROUNDING STUDS OR LUGS FOR CONNECTION OF GROUNDING CONDUCTORS.
3. THE GROUNDING ELECTRODE SHALL BE A 5/8''Ø × 10' LONG COPPER CLAD STEEL GROUNDING ELECTRODE. THE GROUNDING ELECTRODE SHALL BE FURNISHED WITH ADDITIONAL APPROVED WIRE CONNECTORS ARE REQUIRED.
4. B.S.C.W. DENOTES BARE STRANDED COPPER WIRE.

DETAIL A

SERVICE GROUNDING

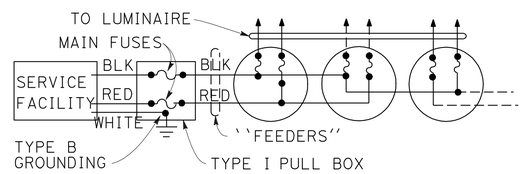

120/240 VOLT, 3-WIRE, 1Ø SERVICE

TYPE C3

TYPICAL SERVICE, ``MAIN'', ``FEEDER'' AND BRANCH CIRCUITS

CIRCUIT PROTECTION REQUIREMENTS (UNLESS OTHERWISE NOTED)						
MAIN FUSE				BRANCH CIRCUITS		
SERVICE CONDUIT	EACH "FEEDER" CONDUCTOR	TOTAL LOAD CURRENT EACH FEEDER	MAIN FUSE (CURRENT RATING)	WATTAGE OF LUMINAIRE	ENERGIZING VOLTAGE OF LUMINAIRE	CURRENT RATING OF FUSE (ALL FUSES SHALL BE RATED 600 VOLTS, 10,000 A.I.C.)
1½''	#8	15A *	30	200	240	10 10
				310	240	15 10
1½''	#6 **	15A-30A *	60	400	240	20 10

* SEE NOTE 4 AT RIGHT.

** FUSE HOLDERS FOR SERVICE FUSES SHALL BE FURNISHED WITH "BREAKAWAY" FEATURE.

2#8 CONDUCTOR "TAPS" REQUIRED FOR EACH LUMINAIRE.

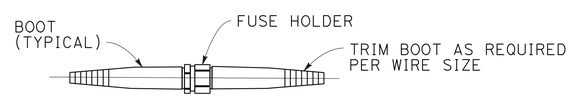

1-POLE WATERPROOF FUSE HOLDER

(FOR EACH UNGROUNDED CONDUCTOR IN EACH LOAD CONNECTED FOR 120 VOLT, 2-WIRE, 1Ø OPERATION OR FOR 240 VOLT, 2-WIRE, 1Ø OPERATION AND HAVING A GROUNDED CONDUCTOR)

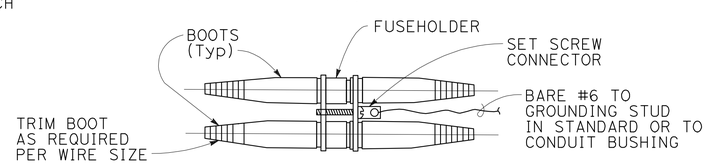

2-POLE SIMULTANEOUS DISCONNECTING WATERPROOF FUSE HOLDER

(FOR UNGROUNDED CONDUCTORS IN EACH LOAD CONNECTED TO THE TWO (2) UNGROUNDED CONDUCTORS ENERGIZED BY A 240 VOLT, 2-WIRE, 1Ø SOURCE)

IN LINE FUSE HOLDER

``MAIN'', ``FEEDER'' AND BRANCH FUSE HOLDER NOTES:

1. PROVIDE FUSE HOLDERS FOR FUSES AS SHOWN IN THE APPLICABLE DETAILS AND IN ACCORDANCE WITH THE SCHEDULE AS SHOWN ON THIS PLAN.
2. CONNECTING SLEEVES SHALL BE OF THE APPROPRIATE SIZE FOR THE CONDUCTORS SHOWN ON THE PLANS.
3. FUSE HOLDERS SHALL BE INSTALLED AS FOLLOWS (UNLESS OTHERWISE NOTED OR SPECIFIED):
   A. ``MAINS'' AND INDIVIDUALLY SERVED STREET LIGHTS LOCATED LESS THAN 30' FROM SERVICE LOCATION: IN PULL BOX NEAREST SERVICE BOX.
   B. BRANCHES AND INDIVIDUALLY SERVED STREET LIGHTS LOCATED MORE THAN 32.8' FROM SERVICE LOCATION: IN PULL BOX NEAREST STREET LIGHT STANDARD.
4. MAIN FUSES SHALL NOT BE LESS THAN TWO TIMES LINE CURRENT, NOR LESS THAN TWO TIMES THE LARGEST BRANCH FUSE SIZE.

ELECTRICAL DETAILS
CITY AND COUNTY OF SAN FRANCISCO
STREET LIGHT AND CIRCUIT REQUIREMENTS

NO SCALE

E-15

REVISED BY	HQG
DATE REVISED	4/6/10
HENRY Q. GU	
KENNETH Y. XU	
CALCULATED-DESIGNED BY	
CHECKED BY	
FUNCTIONAL SUPERVISOR	LAI HONG CHIU

STATE OF CALIFORNIA - DEPARTMENT OF TRANSPORTATION
Caltrans
ELECTRICAL

LAST REVISION 04-18-10
DATE PLOTTED => 28-JUN-2010
TIME PLOTTED => 07:04

Dist	COUNTY	ROUTE	POST MILES TOTAL PROJECT	SHEET No.	TOTAL SHEETS
04	SF	80	4.9/5.9	96	127

REGISTERED ELECTRICAL ENGINEER Kenneth Y. Xu 6-7-10 DATE

6-21-10
PLANS APPROVAL DATE

REGISTERED PROFESSIONAL ENGINEER Kenneth Y. Xu No. 15219 Exp 6-30-10 ELECT STATE OF CALIFORNIA

THE STATE OF CALIFORNIA OR ITS OFFICERS OR AGENTS SHALL NOT BE RESPONSIBLE FOR THE ACCURACY OR COMPLETENESS OF SCANNED COPIES OF THIS PLAN SHEET.

DETAIL IV SIGNAL FACE CODE NUMBER

THE FIRST DIGIT RELATES TO THE DIRECTION OF TRAFFIC FLOW.

THE SECOND DIGIT RELATES TO THE POSITION OF THE SIGNAL FACE IN THE INTERSECTION.

THE THIRD DIGIT RELATES TO THE POSITION OF THE MULTI SIGNAL FACES ON THE MAST ARM.

SECOND DIGITS ARE ASSIGNED AS FOLLOWS:

1 = FAR RIGHT
2 = FAR LEFT
4 = MAST ARM
5 = NEAR RIGHT
6 = NEAR LEFT
8 = PEDESTRIAN SIGNAL UNDER VEHICLE SIGNAL
9 = PEDESTRIAN SIGNAL AT END OF CROSSWALK OPPOSITE SIGNAL

THIRD DIGITS ARE ASSIGNED AS FOLLOWS:

1 = FAR FROM SIDEWALK
2 = NEAR SIDEWALK

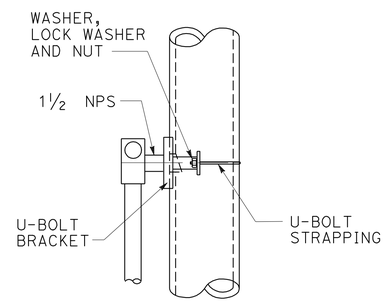

VIEW A

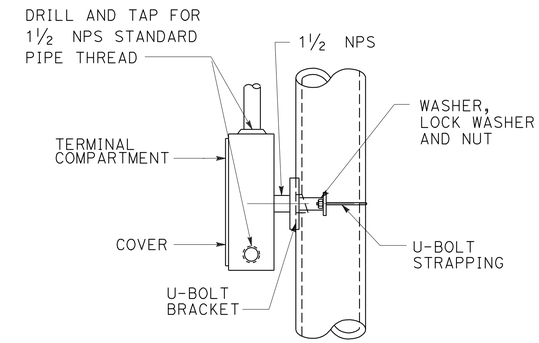

VIEW B

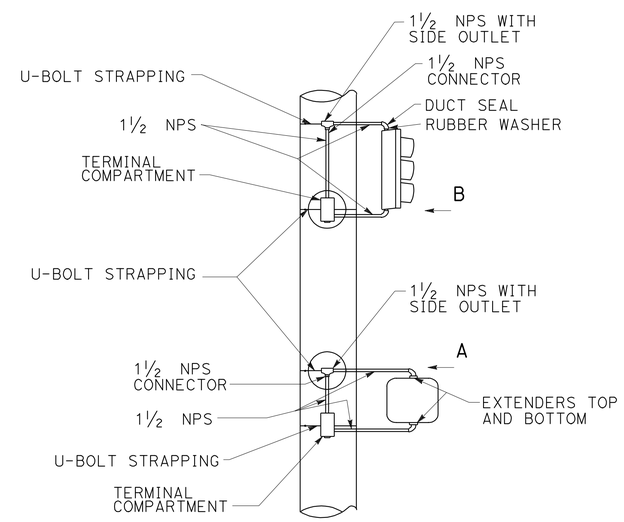

DETAIL III SIGNAL HEAD MOUNTINGS

ELECTRICAL DETAILS

NO SCALE

E-16

CALCULATED-DESIGNED BY	HENRY Q. GU
CHECKED BY	KENNETH Y. XU
REVISED BY	HQG
DATE REVISED	4/6/10
FUNCTIONAL SUPERVISOR	LAI HONG CHIU

STATE OF CALIFORNIA - DEPARTMENT OF TRANSPORTATION
Caltrans
ELECTRICAL

LAST REVISION 06-08-10 DATE PLOTTED => 28-JUN-2010 TIME PLOTTED => 07:04

DIST	COUNTY	ROUTE	POST MILES TOTAL PROJECT	SHEET NO.	TOTAL SHEETS
04	SF	80	4.9/5.9	97	127

REGISTERED CIVIL ENGINEER

June 5, 2009
PLANS APPROVAL DATE

REGISTERED PROFESSIONAL ENGINEER Glenn DeCou No. C34547 Exp. 9-30-09 CIVIL STATE OF CALIFORNIA

The State of California or its officers or agents shall not be responsible for the accuracy or completeness of electronic copies of this plan sheet.

To accompany plans dated 6-21-10

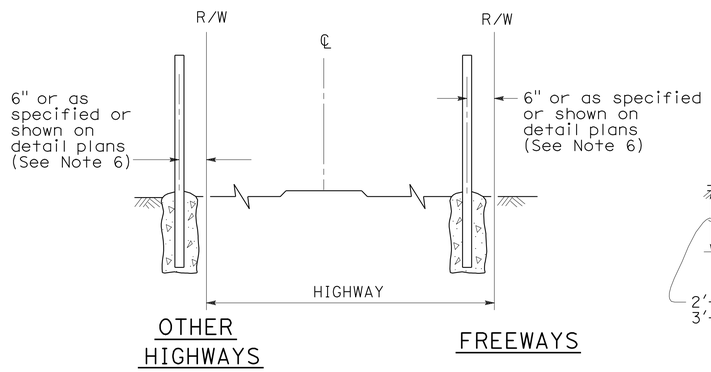

FENCE LOCATION

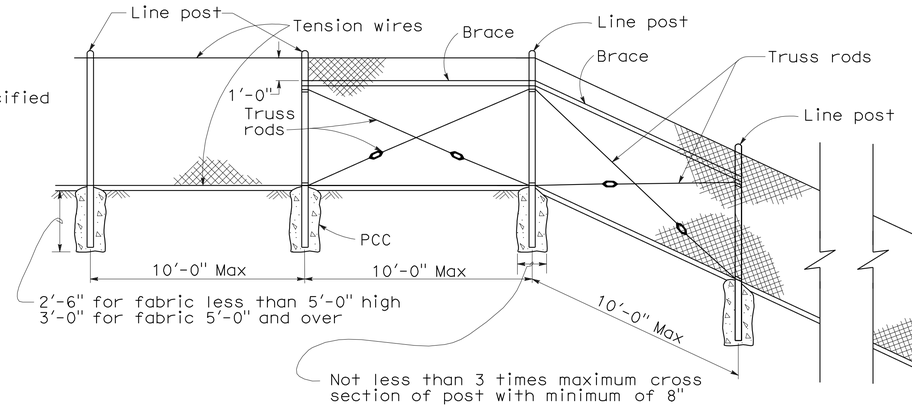

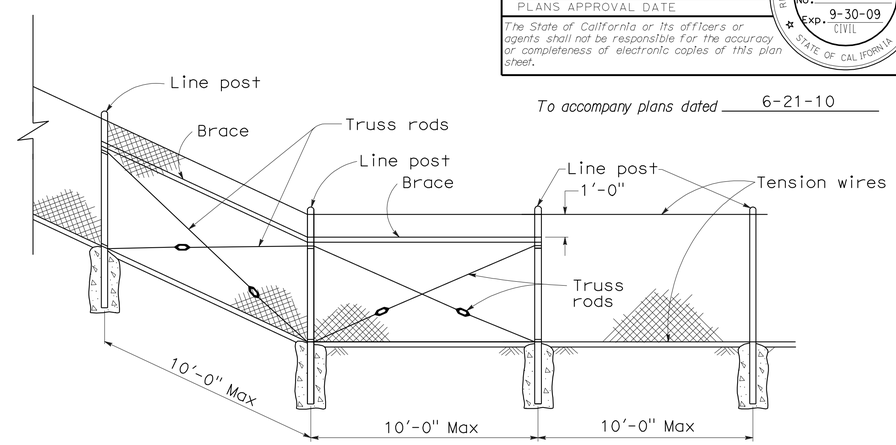

CHAIN LINK FENCE ON SHARP BREAK IN GRADE

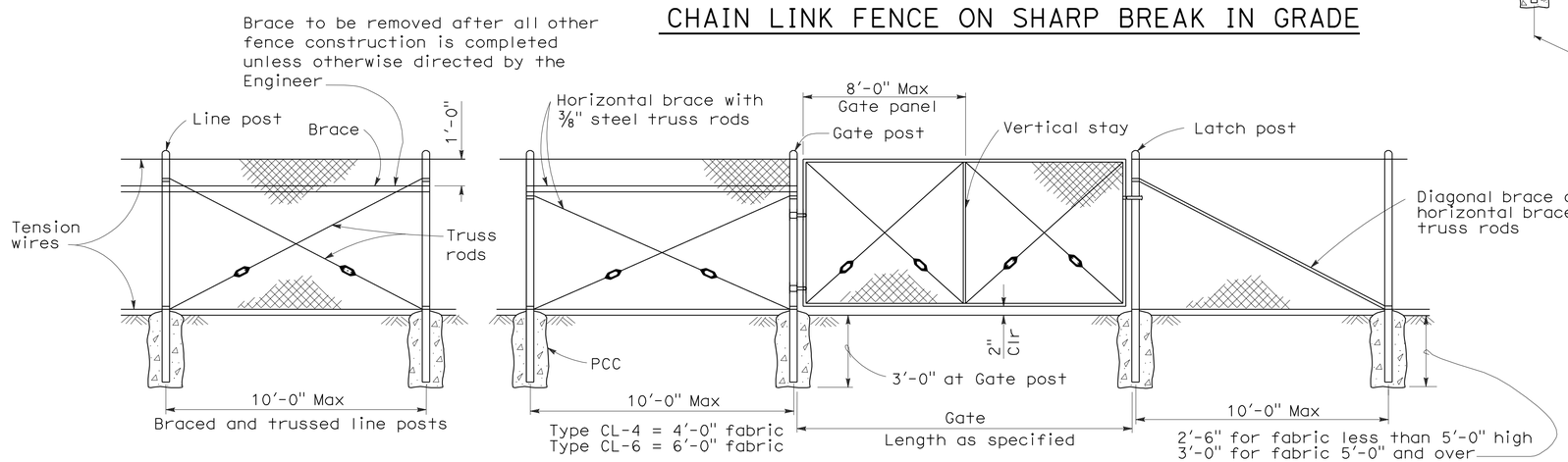

CHAIN LINK GATE INSTALLATION

GATE POST			
FENCE HEIGHT	GATE WIDTHS	NOMINAL ID	WEIGHT PER FOOT
6'-0" and Less	Up thru 6'-0"	2½"	4.95 LB
	Over 6'-0" thru 12'-0"	4"	10.79 LB
	Over 12'-0" thru 18'-0"	5"	14.62 LB
	Over 18'-0" to 24'-0" Max	6"	18.97 LB
Over 6'-0"	Up thru 6'-0"	3"	7.58 LB
	Over 6'-0" thru 12'-0"	5"	14.62 LB
	Over 12'-0" thru 18'-0"	6"	18.97 LB
	Over 18'-0" to 24'-0" Max	8"	28.55 LB

Above post dimensions and weights are minimums. Larger sizes may be used on approval of the Engineer.

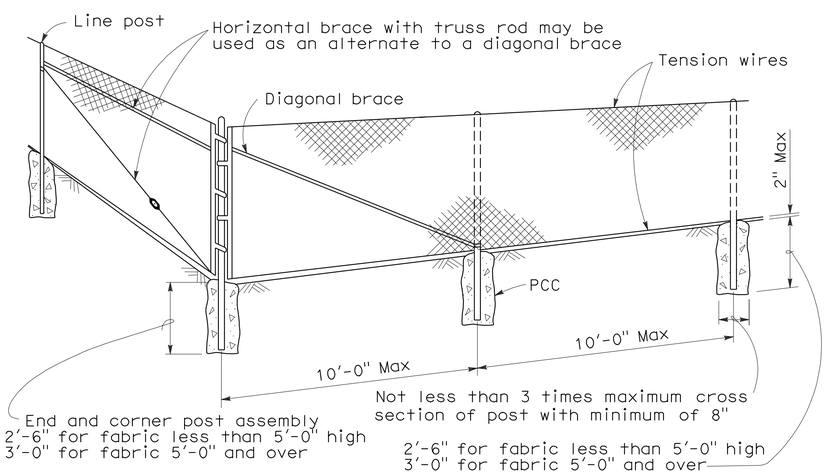

CORNER POST

NOTES:

1. The below table shows examples of post and brace sections which may comply with the Specifications.
2. Sections shown in the tables must also comply with the strength requirements and other provisions of the Specifications.
3. Other sections which comply with the strength requirements and other provisions of the Specifications may be used on approval of the Engineer.
4. Options exercised shall be uniform on any one project.
5. Dimensions shown are nominal.
6. Offset to be 2'-0" at monument locations, measured at right angles to R/W lines. Taper to achieve offset to be at least 20'-0" long.

TYPICAL MEMBER DIMENSIONS (See Notes)											
FENCE HEIGHT	LINE POSTS			END, LATCH & CORNER POSTS				BRACES			
	ROUND ID	H	ROLL FORMED	ROUND ID	ROLL FORMED			ROUND ID	H	ROLL FORMED	
6' & less	1½"	1⅞" × 1⅝"	1⅞" × 1⅝"	2"	3½" × 3½"	2" × 1¾"		1¼"	1½" × 1 5/16"	1⅝" × 1¼"	1¾" × 1¼"
Over 6'	2"	2¼" × 2"	2" × 1¾"	2½"	3½" × 3½"	2½" × 2½"		1¼"	1½" × 1 5/16"	1⅝" × 1¼"	1¾" × 1¼"

STATE OF CALIFORNIA
DEPARTMENT OF TRANSPORTATION

CHAIN LINK FENCE

NO SCALE

RSP A85 DATED JUNE 5, 2009 SUPERSEDES STANDARD PLAN A85
DATED MAY 1, 2006 - PAGE 111 OF THE STANDARD PLANS BOOK DATED MAY 2006.

REVISED STANDARD PLAN RSP A85

2006 REVISED STANDARD PLAN RSP A85

5-7-09

DIST	COUNTY	ROUTE	POST MILES TOTAL PROJECT	SHEET NO.	TOTAL SHEETS
04	SF	80	4.9/5.9	98	127

REGISTERED CIVIL ENGINEER

June 5, 2009
PLANS APPROVAL DATE

REGISTERED PROFESSIONAL ENGINEER Glenn DeCou No. C34547 Exp. 9-30-09 CIVIL STATE OF CALIFORNIA

The State of California or its officers or agents shall not be responsible for the accuracy or completeness of electronic copies of this plan sheet.

To accompany plans dated 6-21-10

NOTES:

1. H is 2'-6" for fabric less than 5'-0" high.
   H is 3'-0" for fabric 5'-0" and over.
2. T is not less than 3 times maximum cross section of post with minimum of 8".
3. Arms with barbed wire to be used where shown on plans.
4. See Revised Standard Plan RSP A85 for Chain Link Fencing dimensions.
5. Reinforcing must comply with ASTM A 706.
6. See Detail A on New Standard Plan NSP A86B for connection at headwall.

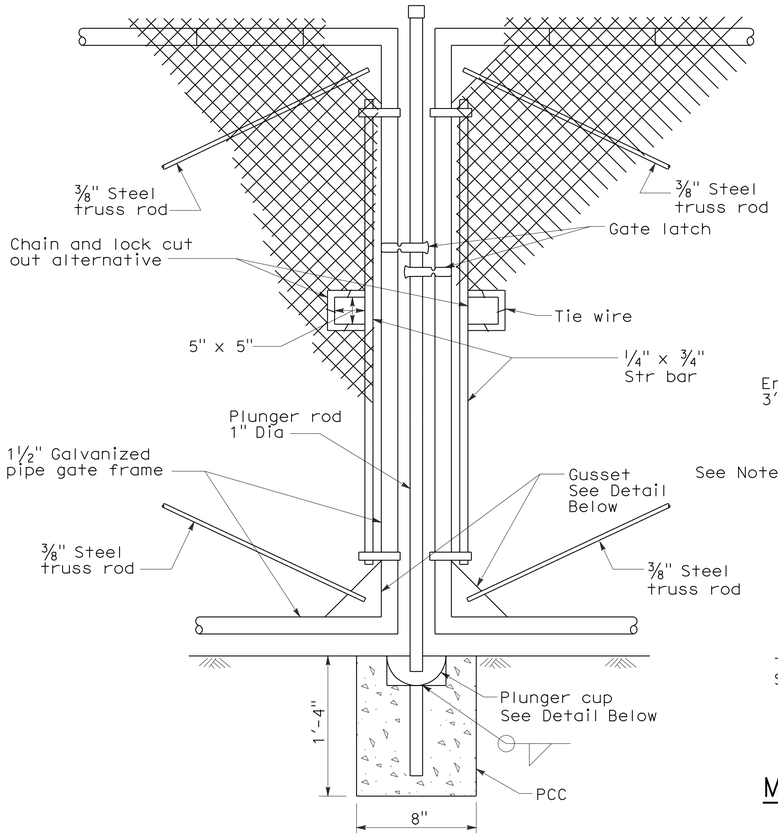

TYPICAL DOUBLE GATE
REMOVABLE CENTER POST

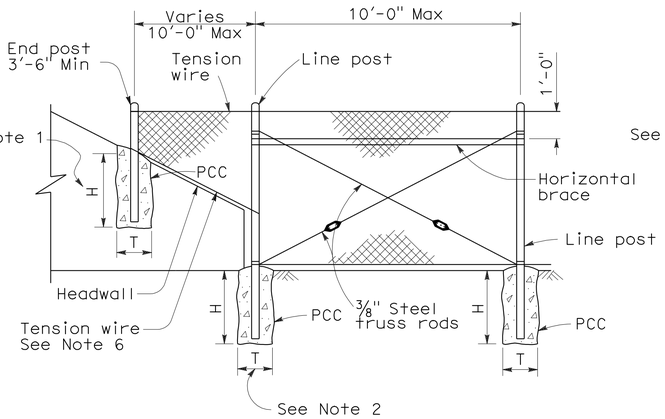

METHOD OF TYING FENCE TO HEADWALL

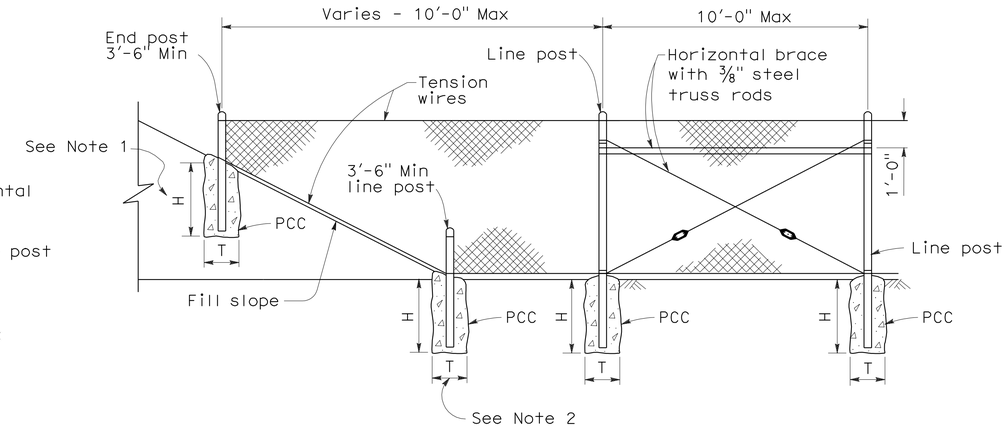

METHOD OF ERECTING FENCE FOR FILL SLOPE

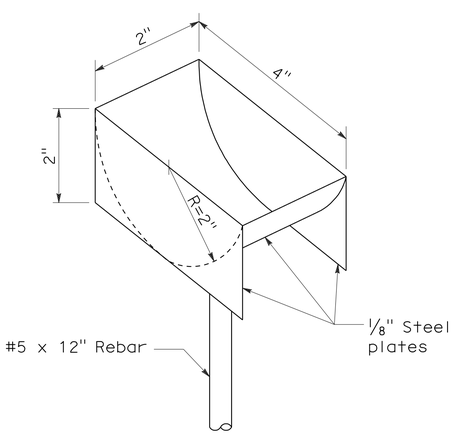

PLUNGER CUP DETAIL

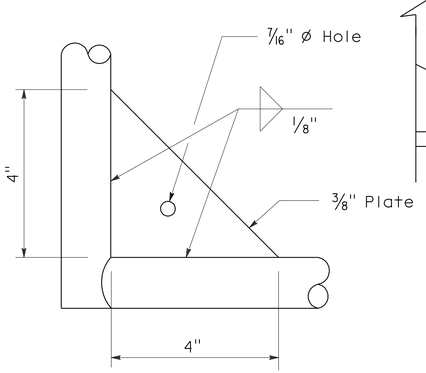

GUSSET DETAIL

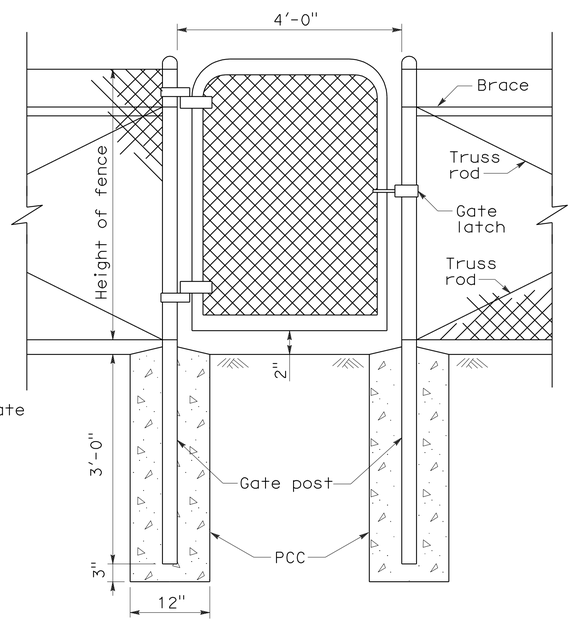

WALK GATE

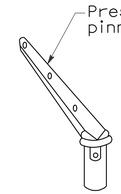

POST TOP END

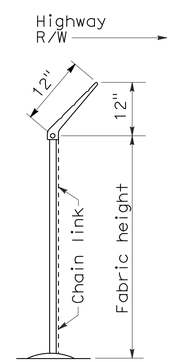

END ELEVATION

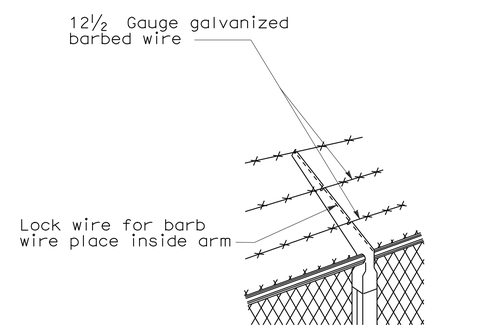

LINE POST TOP
Vertical arms when desired

BARBED WIRE POST TOP
See Note 3

STATE OF CALIFORNIA
DEPARTMENT OF TRANSPORTATION

CHAIN LINK FENCE DETAILS

NO SCALE

NSP A85A DATED JUNE 5, 2009 SUPPLEMENTS THE STANDARD PLANS BOOK DATED MAY 2006.

NEW STANDARD PLAN NSP A85A

2006 NEW STANDARD PLAN NSP A85A

5-7-09

DIST	COUNTY	ROUTE	POST MILES TOTAL PROJECT	SHEET NO.	TOTAL SHEETS
04	SF	80	4.9/5.9	99	127

REGISTERED CIVIL ENGINEER

June 5, 2009
PLANS APPROVAL DATE

REGISTERED PROFESSIONAL ENGINEER Glenn DeCou No. C34547 Exp. 9-30-09 CIVIL STATE OF CALIFORNIA

The State of California or its officers or agents shall not be responsible for the accuracy or completeness of electronic copies of this plan sheet.

To accompany plans dated 6-21-10

2006 NEW STANDARD PLAN NSP A85B

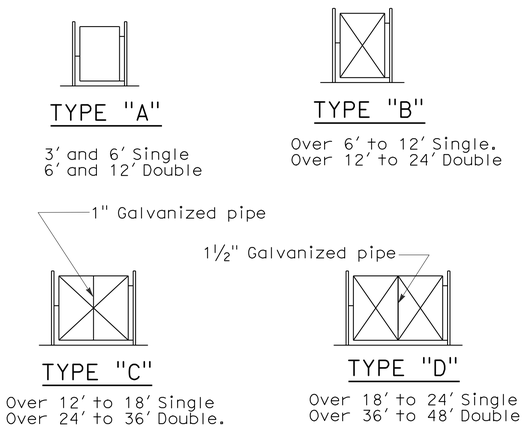

TYPICAL FRAMEWORK SHOWING NUMBER OF BAYS IN GATE

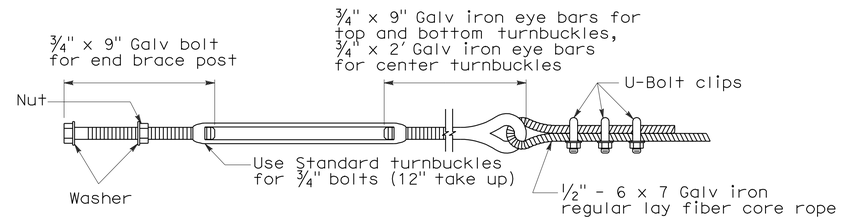

TURNBUCKLE A

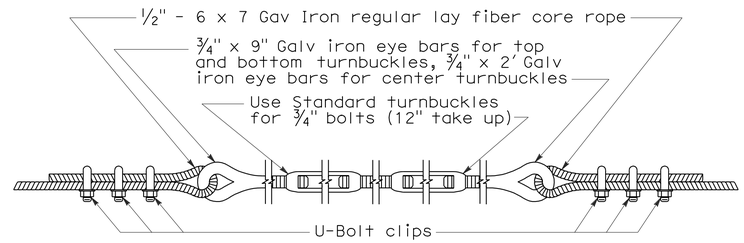

TURNBUCKLE B

NOTES:

1. All material for abutment connection to be galvanized.
2. The chain link fabric shall be replaced by barbed wire strands at 12" maximum centers between the double posts.
3. When the width of the culvert makes it necessary to anchor a post to the top of the culvert, a cast iron shoe or other device approved by the Engineer shall be used.
4. Fencing over stream and around headwall may also use Barbed Wire or Wire Mesh fencing with either wood post or steel post installation.
5. See Revised Standard Plan RSP A85 for Chain Link fence dimensions. See Standard Plan A86 for Barbed Wire and Wire Mesh fence dimensions and for wood post and steel post installation.

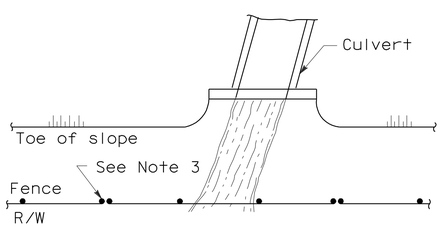

PLAN

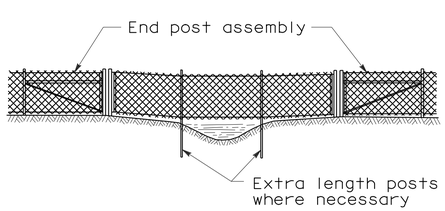

ELEVATION

INSTALLATION OVER STREAM

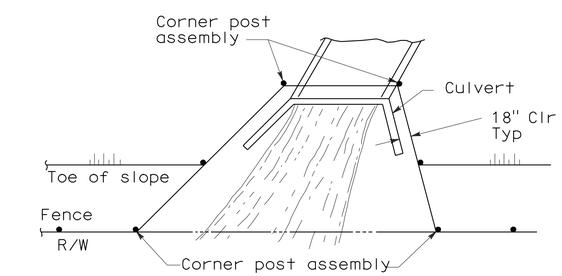

PLAN

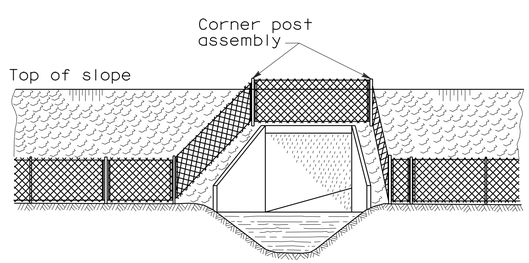

ELEVATION

INSTALLATION AROUND HEADWALL

See Note 4

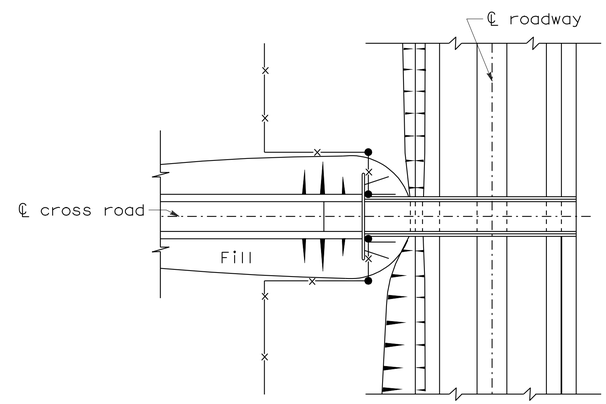

PLAN OF ROADWAY - UNDERPASS

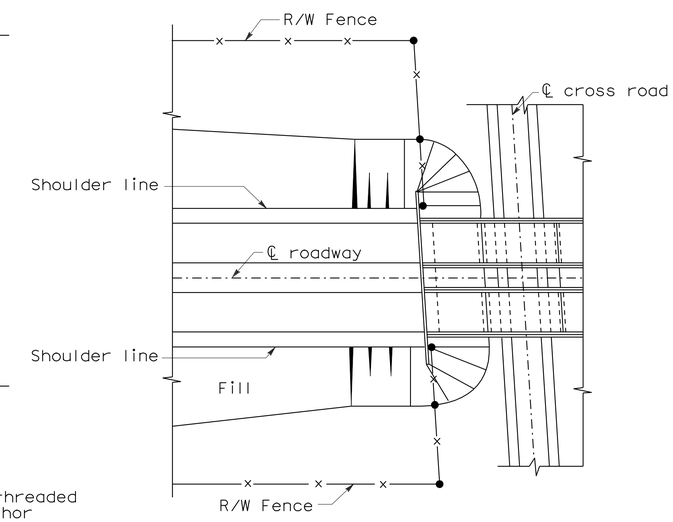

PLAN OF ROADWAY - OVERPASS

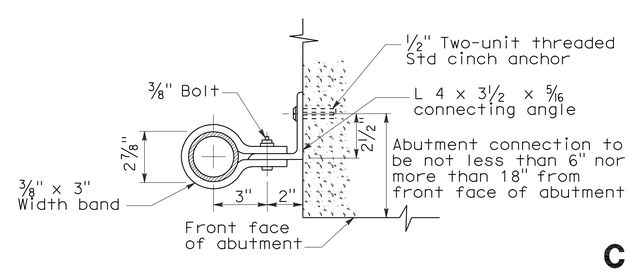

ABUTMENT CONNECTION

TYPICAL INSTALLATION AT BRIDGES

STATE OF CALIFORNIA
DEPARTMENT OF TRANSPORTATION

CHAIN LINK FENCE DETAILS

NO SCALE

NSP A85B DATED JUNE 5, 2009 SUPPLEMENTS THE STANDARD PLANS BOOK DATED MAY 2006.

NEW STANDARD PLAN NSP A85B

DIST	COUNTY	ROUTE	POST MILES TOTAL PROJECT	SHEET NO.	TOTAL SHEETS
04	SF	80	4.9/5.9	100	127

Robert B Schott
LICENSED LANDSCAPE ARCHITECT

April 3, 2009
PLANS APPROVAL DATE

The State of California or its officers or agents shall not be responsible for the accuracy or completeness of electronic copies of this plan sheet.

LICENSED LANDSCAPE ARCHITECT — Robert B. Schott — Signature — 11-30-10 Renewal Date — 2-25-09 Date — STATE OF CALIFORNIA

To accompany plans dated 6-21-10

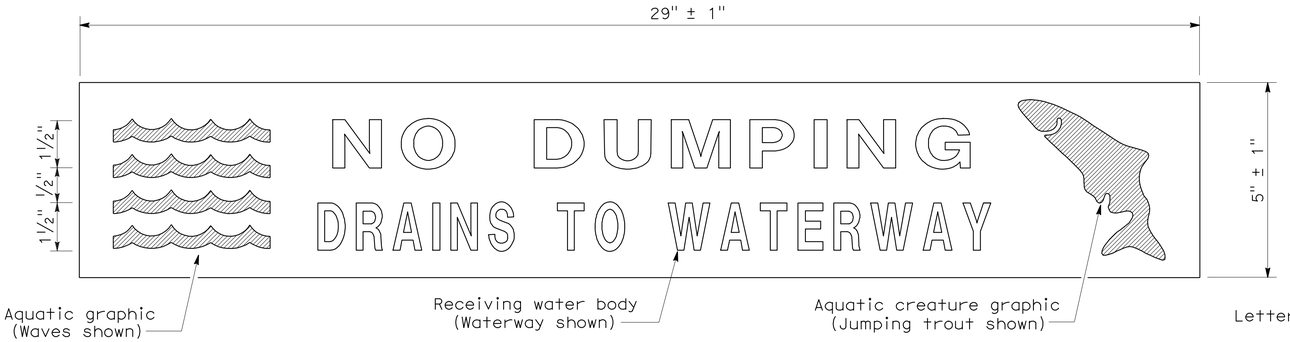

PLAN
DRAINAGE INLET MARKER
(PREFABRICATED THERMOPLASTIC)

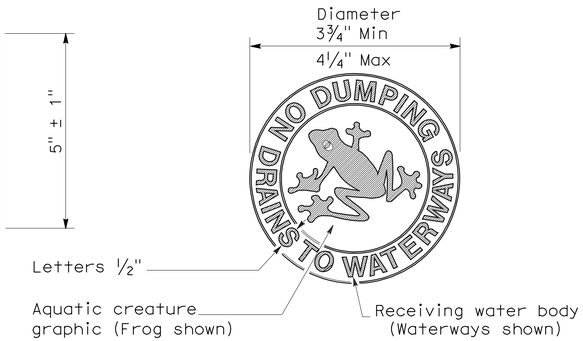

PLAN
DRAINAGE INLET MARKER
(MEDALLION)

PLAN
DRAINAGE INLET MARKER
(STAMPED CONCRETE IMPRINT)

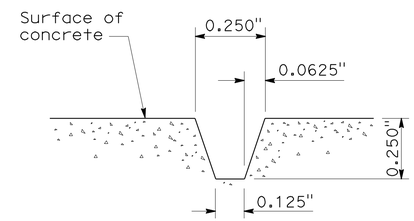

SECTION A-A
STAMPED CONCRETE
IMPRINT DETAIL

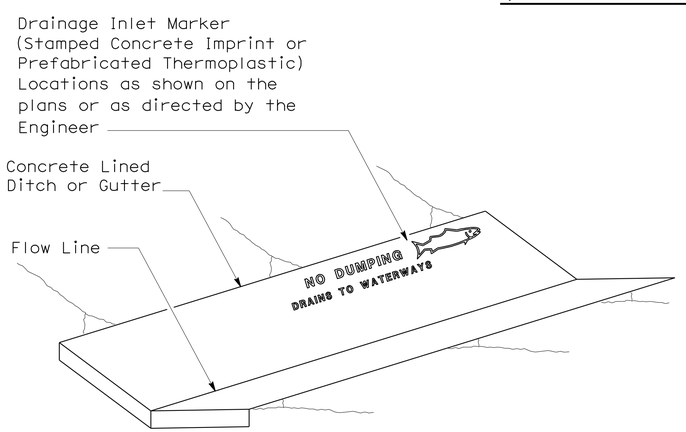

PERSPECTIVE
DRAINAGE INLET MARKER ON
CONCRETE LINED DITCH

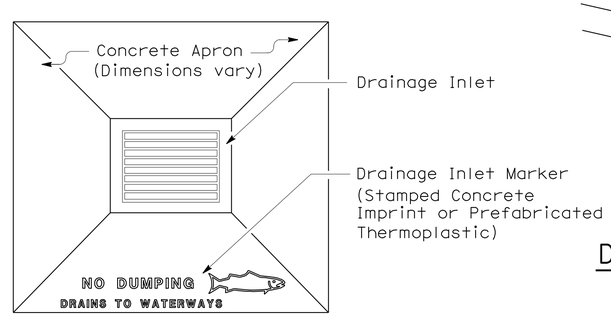

PLAN
DRAINAGE INLET MARKER ON
DRAINAGE INLET APRON

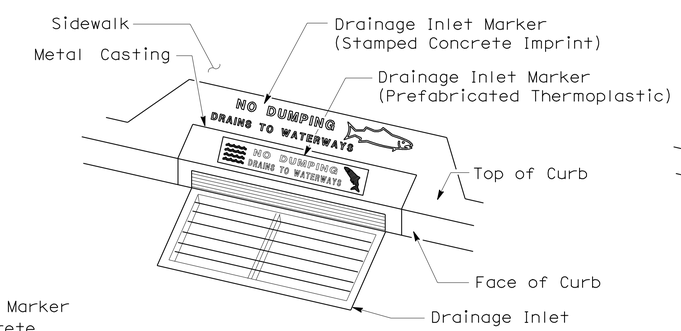

PERSPECTIVE
DRAINAGE INLET MARKER ON
DRAINAGE INLET

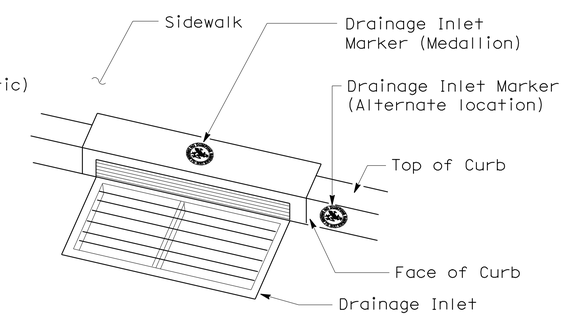

PERSPECTIVE
DRAINAGE INLET MARKER (MEDALLION)
ON DRAINAGE INLET

STATE OF CALIFORNIA
DEPARTMENT OF TRANSPORTATION

DRAINAGE INLET MARKERS

NO SCALE

NSP D71 DATED APRIL 3, 2009 SUPPLEMENTS
THE STANDARD PLANS BOOK DATED MAY 2006.

NEW STANDARD PLAN NSP D71

2006 NEW STANDARD PLAN NSP D71

7-24-08