DIST.	COUNTY	ROUTE	POST MILES TOTAL PROJECT	SHEET NO.	TOTAL SHEETS
04	CC,Sol	80	13.9/14.2, 0.0/0.5	16	42

REGISTERED ENGINEER - CIVIL 11-17-11

6-27-11
PLANS APPROVAL DATE

REGISTERED PROFESSIONAL ENGINEER Michael Bahrami No. 58795 Exp. 6-30-13 CIVIL STATE OF CALIFORNIA

The State of California or its officers or agents shall not be responsible for the accuracy or completeness of electronic copies of this plan sheet.

3

INDEX TO PLANS

Sheet No.	Title
1	GENERAL PLAN
2	INDEX TO PLANS
3	GENERAL DEMOLITION PLAN
4	DEMOLITION DETAILS
5	EXISTING PILE LAYOUT
6	GENERAL LAYOUT PLAN
7	PILE DETAILS
8	NOSE DETAIL 1
9	NOSE DETAIL 2
10	NOSE DETAIL 3 AND BEAM SPLICE DETAIL
11	PIER CAP SLAB DETAIL **(DELETED)**
12	BEAM AND PIER CAP SECTIONS
13	CANTILEVER SECTION DETAIL - 1
14	CANTILEVER SECTION DETAIL - 2
15	TYPICAL NON CANTILEVER DETAIL
16	MISCELLANEOUS DETAILS
17	NEW SHEATHINGS LAYOUT - PIER 3
18	PIER 2 PLAN
19	REMOVAL EXISTING - DETAIL 1
20	REMOVAL EXISTING - DETAIL 2
21	INSTALLATION DETAIL - 1
22	INSTALLATION DETAIL - 2
23	NOSE SHEATHING DETAILS
24	ACCESS LADDER DETAILS
25	LADDER SECURITY COVER
26	PIER 3 - NEW CABLE RAILING
27	SHEATHING PLAN @ BUMPER GAP
28	LOG OF TEST BORINGS

GENERAL NOTES

CALTRANS BRIDGE DESIGN SPECIFICATIONS (LFRD)
APRIL 2000. (1996 AASHTO WITH INTERIMS
AND REVISIONS BY CALTRANS)

MATERIALS:

CONCRETE :
f'c = 3500 psi

REINFORCING BAR:
ASTM A615, GRADE 60 OR A706

STRUCTURAL STEEL PLATE, BAR AND SHAPES:
ASTM A709, GRADE 36

HS BOLT:
ASTM 276, TYPE 316
STAINLESS STEEL

STEEL PIPE PILE:
Fy (Minimum yield strength) = 45,000 psi
Fu (Minimum tensile strength) = 66,000 psi

ALL REINFORCING BARS ARE EPOXY COATED
EXCEPT REBARS USED INSIDE CISS PILES

SEISMIC DESIGN: Caltrans Seismic Design Criteria (SDC), Version 1.4 dated June 2006

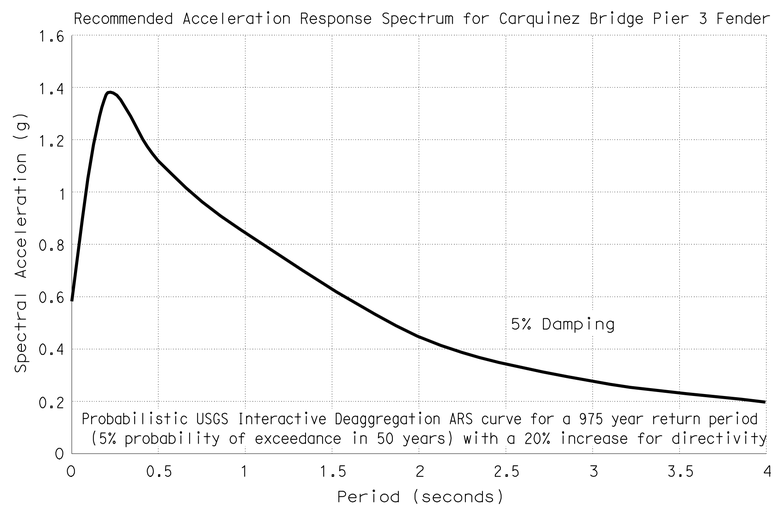

ARS DESIGN CURVE

No Scale

STANDARD PLANS DATED MAY 2006

SHEET No.	TITLE
A10A	ACRONYMS AND ABBREVIATIONS (SHEET 1 OF 2)
A10B	ACRONYMS AND ABBREVIATIONS (SHEET 2 OF 2)

CARQUINEZ BRIDGE BR NO 23-0015

QUANTITIES

BRIDGE REMOVAL (PORTION)	LUMP	SUM
FURNISH 28" CAST-IN-STEEL SHELL CONCRETE PILING	**4,060**	LF
DRIVE 28" CAST-IN-STEEL SHELL CONCRETE PILE	**29**	EA
STRUCTURAL CONCRETE, BRIDGE	1,854	CY
DRILL AND BOND DOWEL	**187**	LF
RUBBER BUMPER	8	EA
BAR REINFORCING STEEL (BRIDGE)	**35,380**	LB
BAR REINFORCING STEEL (EPOXY COATED) (BRIDGE)	**517,790**	LB
PLASTIC LUMBER	341	MFBM
CLEAN AND THERMAL SPRAY COAT STEEL PIPE PILE	LUMP	SUM
MISCELLANEOUS METAL (BRIDGE)	**255,582**	LB

NOTE:
THE CONTRACTOR SHALL VERIFY ALL CONTROLLING FIELD DIMENSIONS BEFORE ORDERING OR FABRICATING ANY MATERIAL.

3 **REVISED PER ADDENDUM No. 3 DATED NOVEMBER 23, 2011**

	BY	CHECKED
DESIGN	M. Bahrami	A. Kushkaki
DETAILS	B. Ballesteros	M. Bahrami
QUANTITIES	M. Bahrami	A. Kushkaki

STATE OF CALIFORNIA
DEPARTMENT OF TRANSPORTATION

DIVISION OF MAINTENANCE
STRUCTURE MAINTENANCE AND INVESTIGATIONS

BRIDGE NO. 23-0015R
POST MILE 13.9/14.2 0.0/0.5

CARQUINEZ BRIDGE
FENDER REHABILITATION
INDEX TO PLANS

STRUCTURES DESIGN DETAIL SHEET (ENGLISH) (REV. 10/25/05)

ORIGINAL SCALE IN INCHES FOR REDUCED PLANS 0 1 2 3

CU 04609
EA 049071

DISREGARD PRINTS BEARING EARLIER REVISION DATES

REVISION DATES (PRELIMINARY STAGE ONLY) 07-28-08 12-08-08 12-14-10 10-13-11 10-24-11

SHEET 2 OF 28

FILE => 02_quan.dgn

USERNAME => s121614 DATE PLOTTED => 23-NOV-2011 TIME PLOTTED => 08:06

DIST.	COUNTY	ROUTE	POST MILES TOTAL PROJECT	SHEET NO.	TOTAL SHEETS
04	CC,Sol	80	13.9/14.2, 0.0/0.5	17	42

11-17-11
REGISTERED ENGINEER - CIVIL

6-27-11
PLANS APPROVAL DATE

REGISTERED PROFESSIONAL ENGINEER
Michael Bahrami
No. 58795
Exp. 6-30-13
CIVIL
STATE OF CALIFORNIA

The State of California or its officers or agents shall not be responsible for the accuracy or completeness of electronic copies of this plan sheet.

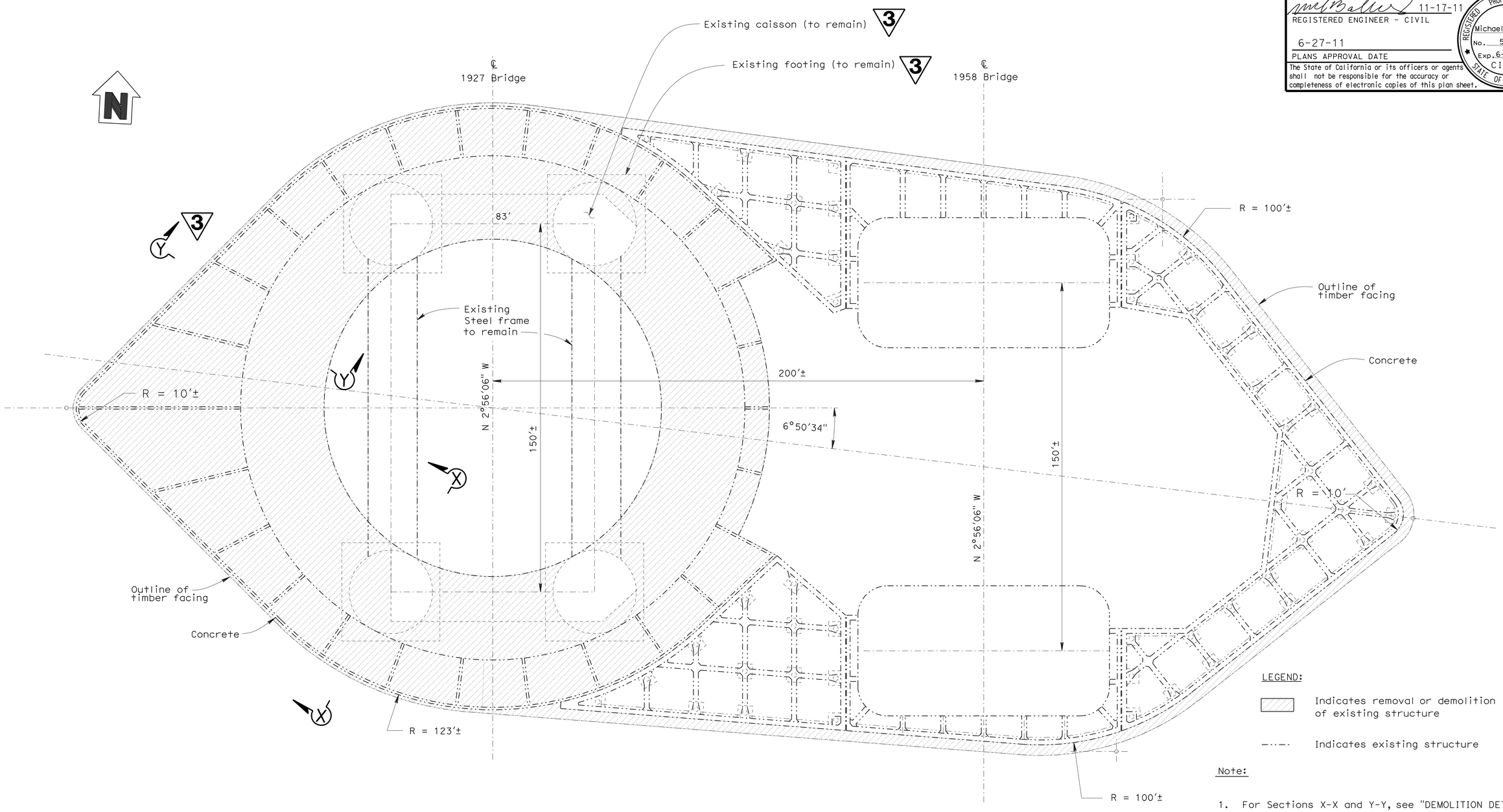

LEGEND:

Indicates removal or demolition of existing structure

Indicates existing structure

Note:

1. For Sections X-X and Y-Y, see "DEMOLITION DETAILS" sheet.
2. For sheathing removal on Pier 2, see "PIER 2 PLAN" sheet.

NOTE:
THE CONTRACTOR SHALL VERIFY ALL CONTROLLING FIELD DIMENSIONS BEFORE ORDERING OR FABRICATING ANY MATERIAL.

PIER 3 EXISTING PLAN

Scale: 1" = 20'

3 **REVISED PER ADDENDUM No. 3 DATED NOVEMBER 23, 2011**

DESIGN	BY M. Bahrami	CHECKED A. Kushkaki	
DETAILS	BY B. Ballesteros	CHECKED M. Bahrami	
QUANTITIES	BY M. Bahrami	CHECKED A. Kushkaki	

STATE OF CALIFORNIA
DEPARTMENT OF TRANSPORTATION

DIVISION OF MAINTENANCE
STRUCTURE MAINTENANCE AND INVESTIGATIONS

BRIDGE NO. 23-0015R
POST MILE 13.9/14.2 0.0/0.5

CARQUINEZ BRIDGE
FENDER REHABILITATION
GENERAL DEMOLITION PLAN

STRUCTURES DESIGN DETAIL SHEET (ENGLISH) (REV. 10/25/05)

ORIGINAL SCALE IN INCHES FOR REDUCED PLANS 0 1 2 3

CU 04609
EA 049071

DISREGARD PRINTS BEARING EARLIER REVISION DATES

REVISION DATES (PRELIMINARY STAGE ONLY): 08-14-08 12-08-08 09-14-09 10-14-11 10-24-11

SHEET 3 OF 28

FILE => 03_gpdemo.dgn

USERNAME => s12614 DATE PLOTTED => 23-NOV-2011 TIME PLOTTED => 07:56

DIST.	COUNTY	ROUTE	POST MILES TOTAL PROJECT	SHEET NO.	TOTAL SHEETS
04	CC,Sol	80	13.9/14.2, 0.0/0.5	18	42

REGISTERED ENGINEER - CIVIL 11-17-11

6-27-11
PLANS APPROVAL DATE

REGISTERED PROFESSIONAL ENGINEER Michael Bahrami No. 58795 Exp. 6-30-13 CIVIL STATE OF CALIFORNIA

The State of California or its officers or agents shall not be responsible for the accuracy or completeness of electronic copies of this plan sheet.

3

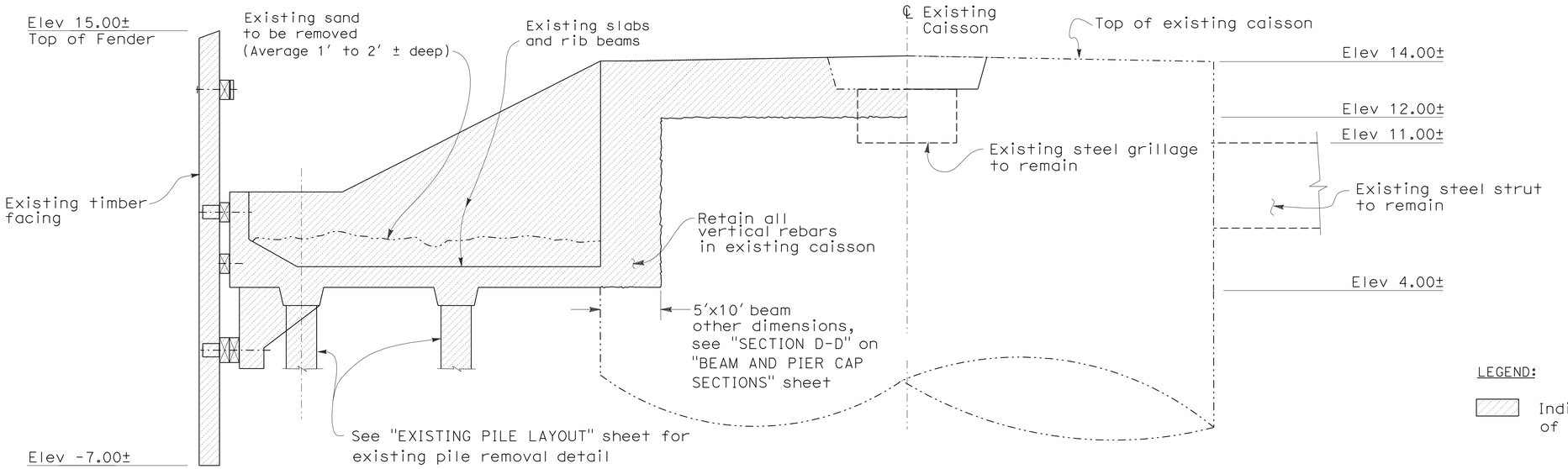

SECTION X-X

Not To Scale

LEGEND:

Indicates removal or demolition of existing structure

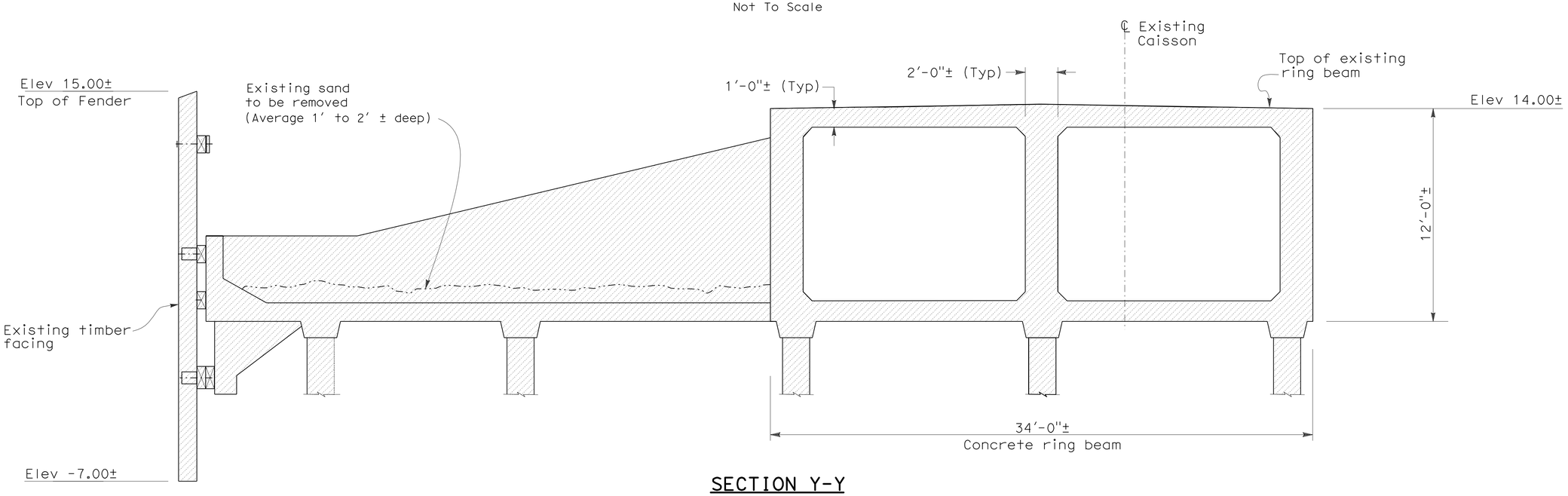

SECTION Y-Y

Not To Scale

NOTE:
THE CONTRACTOR SHALL VERIFY ALL CONTROLLING FIELD DIMENSIONS BEFORE ORDERING OR FABRICATING ANY MATERIAL.

3 **REVISED PER ADDENDUM No. 3 DATED NOVEMBER 23, 2011**

	BY		CHECKED	
DESIGN	BY	M. Bahrami	CHECKED	A. Kushkaki
DETAILS	BY	B. Ballesteros	CHECKED	M. Bahrami
QUANTITIES	BY	M. Bahrami	CHECKED	A. Kushkaki

STATE OF CALIFORNIA
DEPARTMENT OF TRANSPORTATION

DIVISION OF MAINTENANCE
STRUCTURE MAINTENANCE AND INVESTIGATIONS

BRIDGE NO. 23-0015R
POST MILE 13.9/14.2 0.0/0.5

CARQUINEZ BRIDGE
FENDER REHABILITATION
DEMOLITION DETAILS

STRUCTURES MAINTENANCE DETAIL SHEET (ENGLISH) (REV. 1/21/98)

ORIGINAL SCALE IN INCHES FOR REDUCED PLANS 0 1 2 3

CU 04609
EA 049071

DISREGARD PRINTS BEARING EARLIER REVISION DATES

REVISION DATES (PRELIMINARY STAGE ONLY) 08-14-08 10-22-08 09-31-09 10-13-11 10-24-11

SHEET 4 OF 28

FILE => 04_demosect.dgn

USERNAME => s121614 DATE PLOTTED => 23-NOV-2011 TIME PLOTTED => 07:56

DIST	COUNTY	ROUTE	POST MILES TOTAL PROJECT	SHEET No	TOTAL SHEETS
04	CC,Sol	80	13.9/14.2, 0.0/0.5	19	42

REGISTERED CIVIL ENGINEER 11-17-11 DATE

6-27-11
PLANS APPROVAL DATE

REGISTERED PROFESSIONAL ENGINEER Michael Bahrami No. 58795 Exp. 6-30-13 CIVIL STATE OF CALIFORNIA

The State of California or its officers or agents shall not be responsible for the accuracy or completeness of electronic copies of this plan sheet.

3

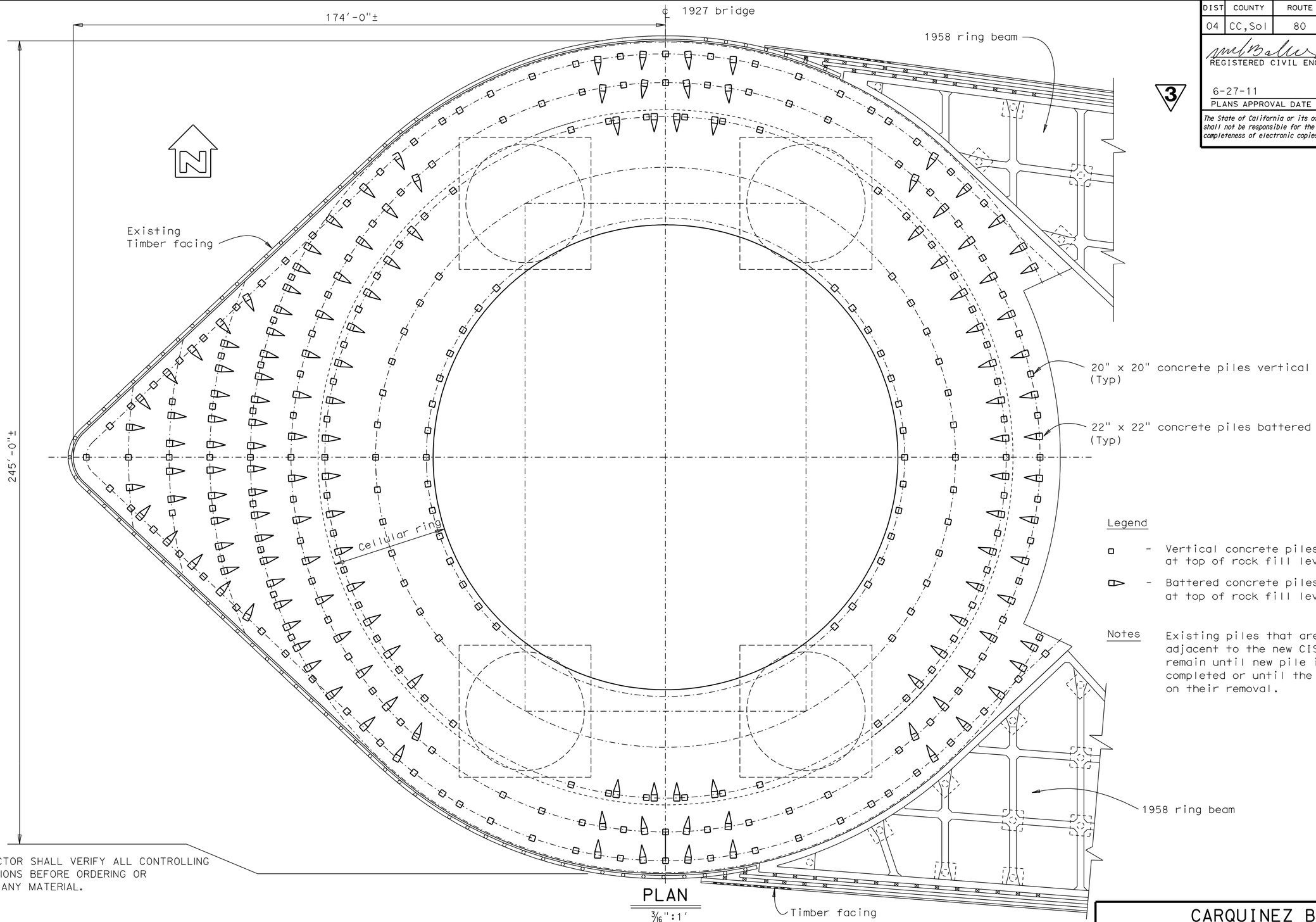

Legend

- Vertical concrete piles to be remove, at top of rock fill level minimum.
- Battered concrete piles to be remove, at top of rock fill level minimum.

Notes

Existing piles that are immediately adjacent to the new CISS piles shall remain until new pile installation is completed or until the Engineer agrees on their removal.

NOTE:
THE CONTRACTOR SHALL VERIFY ALL CONTROLLING FIELD DIMENSIONS BEFORE ORDERING OR FABRICATING ANY MATERIAL.

PLAN
3/16":1'

3 **REVISED PER ADDENDUM No. 3 DATED NOVEMBER 23, 2011**

DESIGN	M. Bahrami	CHECKED	A. Kushkaki
DETAILS	BY B. Ballesteros	CHECKED	M. Bahrami
QUANTITIES	BY M. Bahrami	CHECKED	A. Kushkaki

STATE OF CALIFORNIA
DEPARTMENT OF TRANSPORTATION

DIVISION OF MAINTENANCE
STRUCTURE MAINTENANCE AND INVESTIGATIONS

BRIDGE NO. 23-0015
POST MILE 13.9/14.2 0.0/0.5

CARQUINEZ BRIDGE
FENDER REHABILITATION
EXISTING PILE LAYOUT

STRUCTURES DESIGN DETAIL SHEET (ENGLISH) (REV. 10/25/05)

ORIGINAL SCALE IN INCHES FOR REDUCED PLANS 0 1 2 3

CU 04609
EA 049071

DISREGARD PRINTS BEARING EARLIER REVISION DATES → 02-11-09 06-29-09 09-31-09 10-24-11

REVISION DATES

SHEET 5 OF 28

FILE => 05_pileremovl.dgn

USERNAME => s121614 DATE PLOTTED => 23-NOV-2011 TIME PLOTTED => 07:56

DIST.	COUNTY	ROUTE	POST MILES TOTAL PROJECT	SHEET NO.	TOTAL SHEETS
04	CC,Sol	80	13.9/14.2, 0.0/0.5	20	42

11-17-11
REGISTERED ENGINEER - CIVIL

6-27-11
PLANS APPROVAL DATE

REGISTERED PROFESSIONAL ENGINEER Michael Bahrami No. 58795 Exp. 6-30-13 CIVIL STATE OF CALIFORNIA

The State of California or its officers or agents shall not be responsible for the accuracy or completeness of electronic copies of this plan sheet.

3

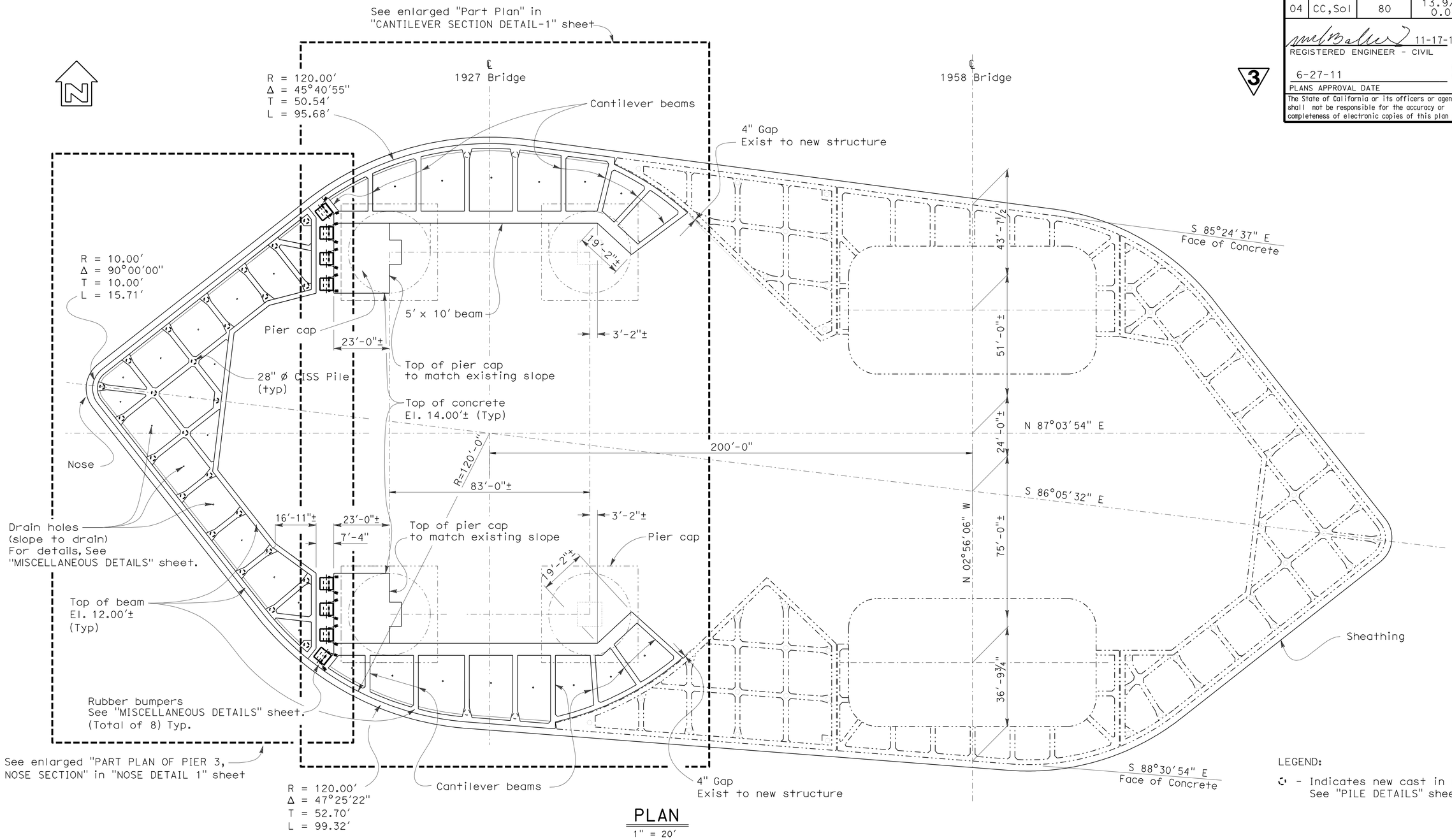

PLAN
1" = 20′

LEGEND:

- Indicates new cast in steel shell. See "PILE DETAILS" sheet.

NOTE:
THE CONTRACTOR SHALL VERIFY ALL CONTROLLING FIELD DIMENSIONS BEFORE ORDERING OR FABRICATING ANY MATERIAL.

3 **REVISED PER ADDENDUM No. 3 DATED NOVEMBER 23, 2011**

DESIGN	BY M. Bahrami	CHECKED A. Kushkaki	
DETAILS	BY B. Ballesteros	CHECKED M. Bahrami	
QUANTITIES	BY M. Bahrami	CHECKED A. Kushkaki	

STATE OF CALIFORNIA
DEPARTMENT OF TRANSPORTATION

DIVISION OF MAINTENANCE
STRUCTURE MAINTENANCE AND INVESTIGATIONS

BRIDGE NO. 23-0015R
POST MILE 13.9/14.2 0.0/0.5

CARQUINEZ BRIDGE
FENDER REHABILITATION
GENERAL LAYOUT PLAN

STRUCTURES DESIGN DETAIL SHEET (ENGLISH) (REV. 1/21/98)

ORIGINAL SCALE IN INCHES FOR REDUCED PLANS 0 1 2 3

CU 04609
EA 049071

DISREGARD PRINTS BEARING EARLIER REVISION DATES

REVISION DATES (PRELIMINARY STAGE ONLY): 07-25-08 10-23-08 09-31-09 07-19-10 10-13-11

SHEET 6 OF 28

FILE => 06_proplayout.dgn

USERNAME => s8121614 DATE PLOTTED => 23-NOV-2011 TIME PLOTTED => 07:56

DIST	COUNTY	ROUTE	POST MILES TOTAL PROJECT	SHEET No	TOTAL SHEETS
04	CC,Sol	80	13.9/14.2, 0.0/0.5	21	42

REGISTERED CIVIL ENGINEER 11-17-11 DATE

6-27-11
PLANS APPROVAL DATE

The State of California or its officers or agents shall not be responsible for the accuracy or completeness of electronic copies of this plan sheet.

REGISTERED PROFESSIONAL ENGINEER Michael Bahrami No. 58795 Exp. 6-30-13 CIVIL STATE OF CALIFORNIA

3

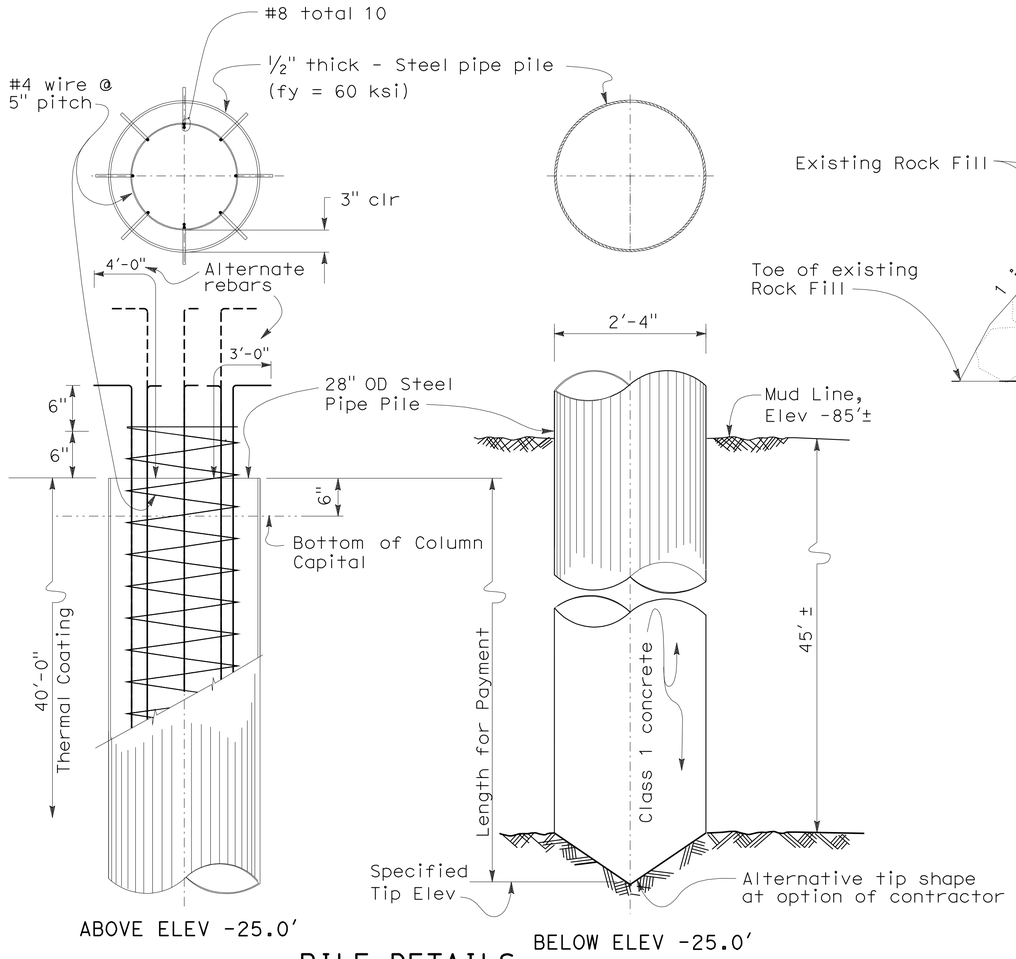

PILE DETAILS

1" = 1'-0"

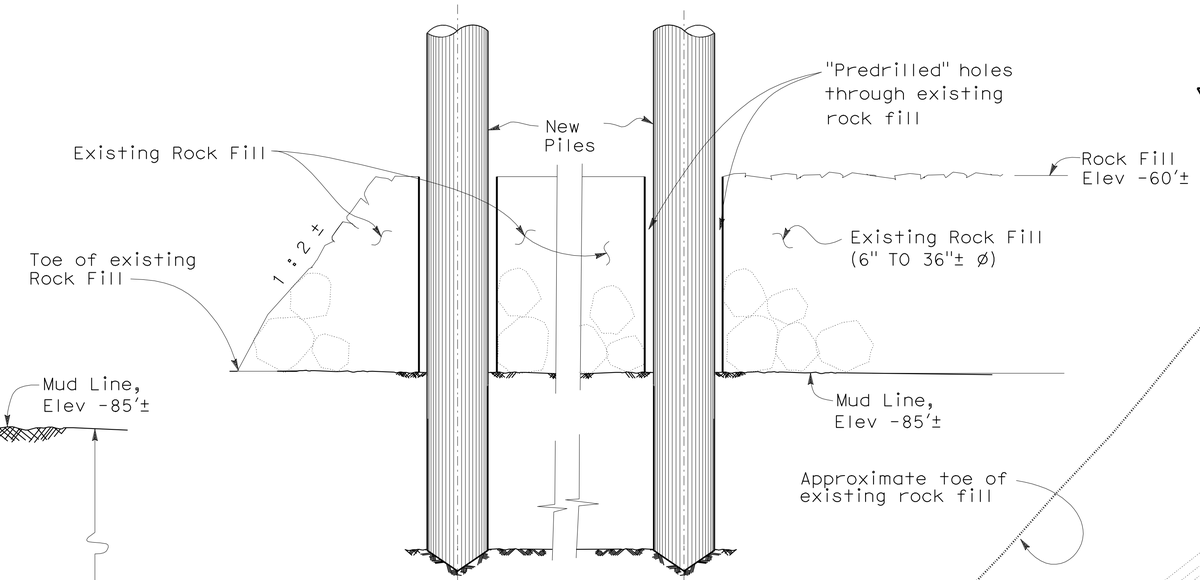

SECTION R - R
PILES THROUGH ROCK FILL

NO SCALE

Notes:

1. Sheathings not shown for clarity.
2. Clean and thermal spray coat the top 40' length of steel pipe pile.
3. Lapped splices in spiral pile reinforcement shall be lapped 80 wire diameters minimum. Spiral pile reinforcement at splices and ends shall be terminated by a 135° hook with with 6" tail hooked or round a longitudinal bar or stand.
4. Piles will be driven by vibration method. Predrill through existing rock fill.

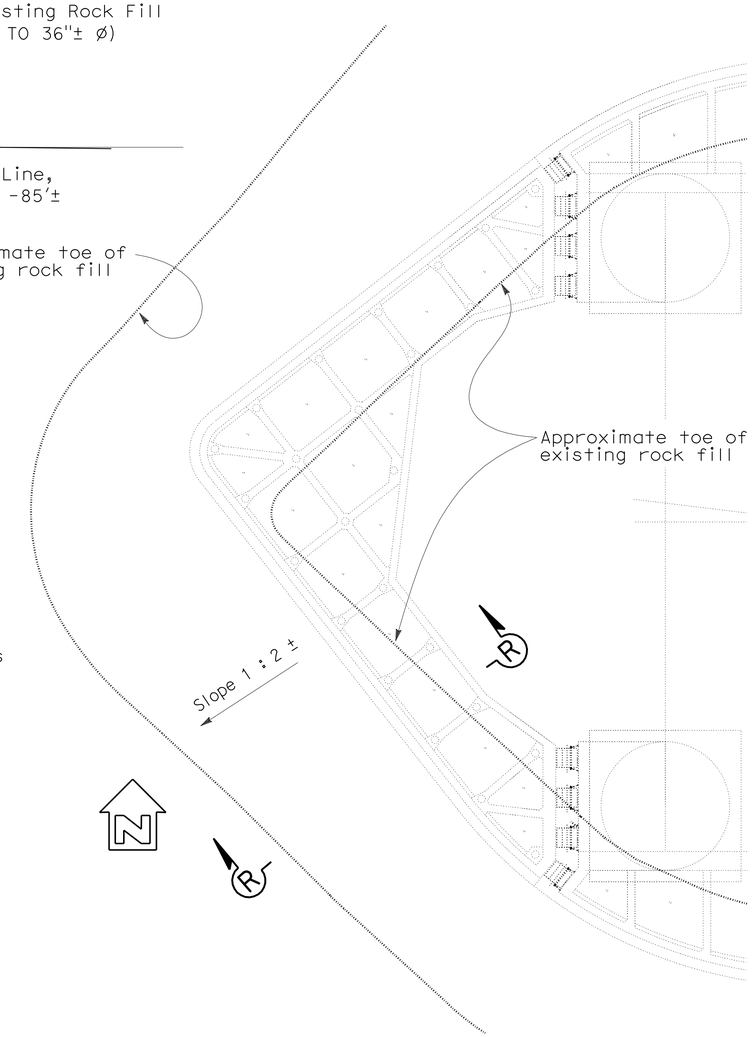

EXISTING ROCK FILL LIMITS

NO SCALE

PILE DATA TABLE

Location	Pile Type	Nominal Resistance (kips)		Design Tip Elevations (ft)	Specified Tip Elevations (ft)	Nominal Driving Resistance (kips)
		Compresssion	Tension			
Pier 3	28" CISS	272	N/A	-130 (a) -123 (c)	-130	272

Notes:

1) Calculated based on dense sand layer at Elevation -118 feet, and the surface of shale bedrock at Elevation -128 feet.
2) Design tip elevations are controlled by: (a) Compression (Strength Limit) and (c) Settlement, respectively.
3) The specified tip elevation shall not be raised above the design tip elevation for Settlement.
4) Steel pipe pile rebar cage extends to elevation -25.0'.

NOTE:
THE CONTRACTOR SHALL VERIFY ALL CONTROLLING FIELD DIMENSIONS BEFORE ORDERING OR FABRICATING ANY MATERIAL.

3 **REVISED PER ADDENDUM No. 3 DATED NOVEMBER 23, 2011**

	BY		CHECKED	
DESIGN	BY	M. Bahrami	CHECKED	A. Kushkaki
DETAILS	BY	B. Ballesteros	CHECKED	M. Bahrami
QUANTITIES	BY	M. Bahrami	CHECKED	A. Kushkaki

STATE OF CALIFORNIA
DEPARTMENT OF TRANSPORTATION

DIVISION OF MAINTENANCE
STRUCTURE MAINTENANCE AND INVESTIGATIONS

BRIDGE NO. 23-0015R
POST MILE 13.9/14.2 0.0/0.5

CARQUINEZ BRIDGE
FENDER REHABILITATION
PILE DETAILS

STRUCTURES DESIGN DETAIL SHEET (ENGLISH) (REV. 10/25/05)

ORIGINAL SCALE IN INCHES FOR REDUCED PLANS 0 1 2 3

CU 04609
EA 049071

DISREGARD PRINTS BEARING EARLIER REVISION DATES

REVISION DATES: 09-24-08 10-12-08 06-29-09 09-31-09 05-04-10 11-08-10 12-06-10 12-14-10 12-28-10 10-13-11

SHEET 7 OF 27

FILE => 07_piledet.dgn

USERNAME => s12614 DATE PLOTTED =>

DIST	COUNTY	ROUTE	POST MILES TOTAL PROJECT	SHEET No	TOTAL SHEETS
04	CC,Sol	80	13.9/14.2, 0.0/0.5	22	42

REGISTERED CIVIL ENGINEER 11-17-11 DATE

6-27-11
PLANS APPROVAL DATE

The State of California or its officers or agents shall not be responsible for the accuracy or completeness of electronic copies of this plan sheet.

REGISTERED PROFESSIONAL ENGINEER Michael Bahrami No. 58795 Exp. 6-30-13 CIVIL STATE OF CALIFORNIA

3

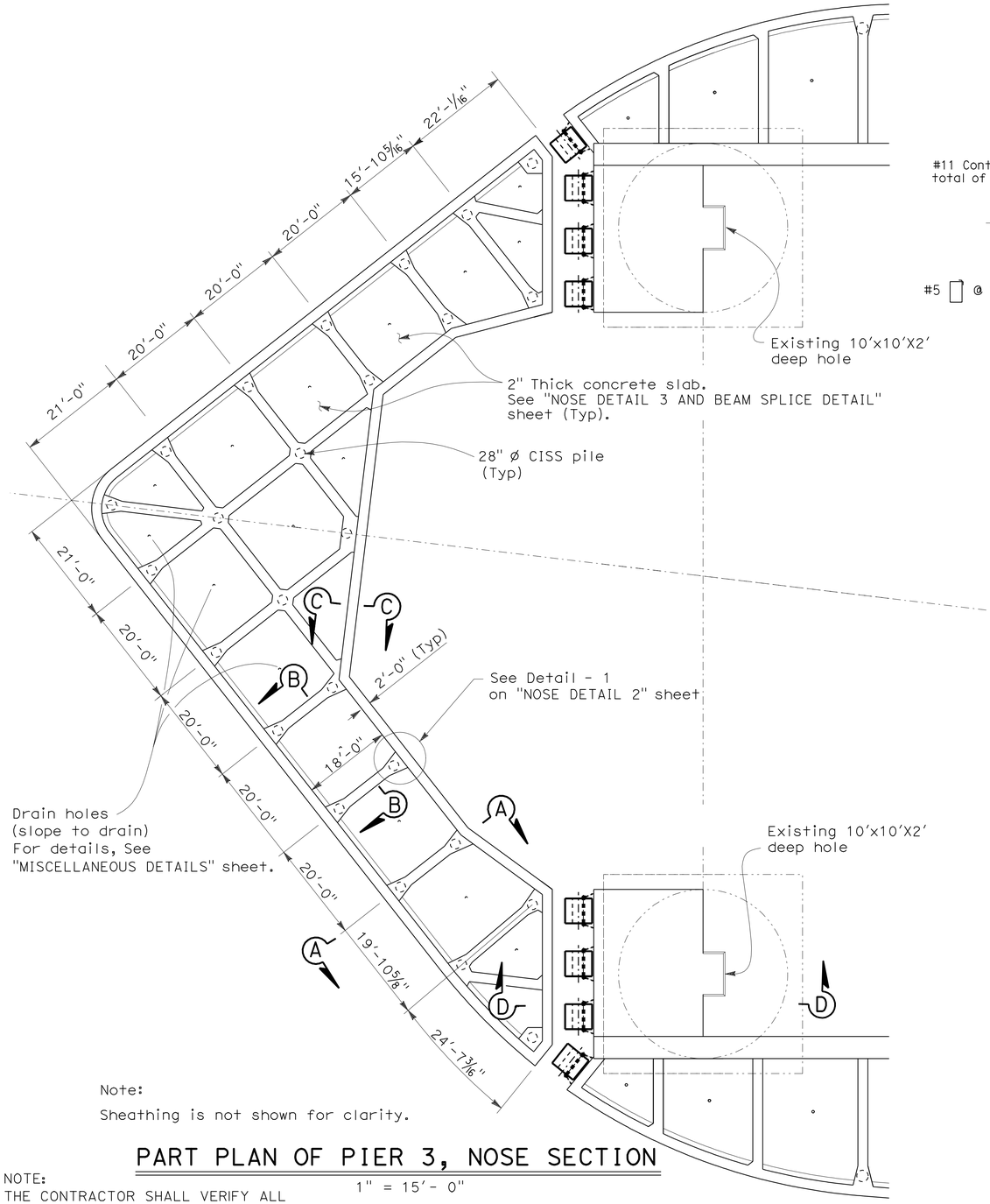

Note:
Sheathing is not shown for clarity.

PART PLAN OF PIER 3, NOSE SECTION

1" = 15'- 0"

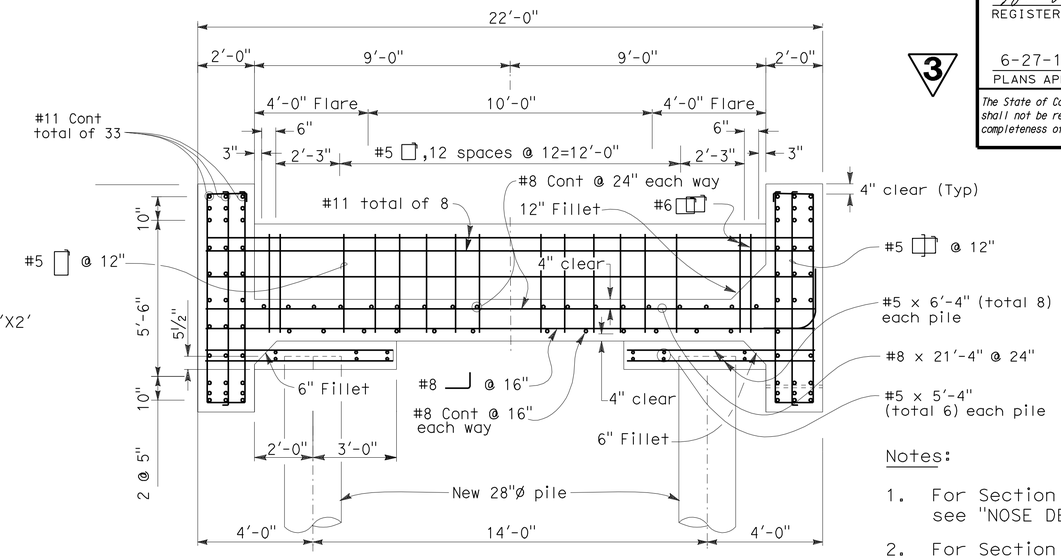

SECTION A - A

3/8" = 1'-0"

Notes:

1. For Section C-C see "NOSE DETAIL 2" sheet.
2. For Section D-D see "BEAM AND PIER CAP SECTIONS" sheet.
3. Sheathings not shown for clarity.
4. For sheathings anchorage, see "INSTALLATION DETAIL - 2" sheet.

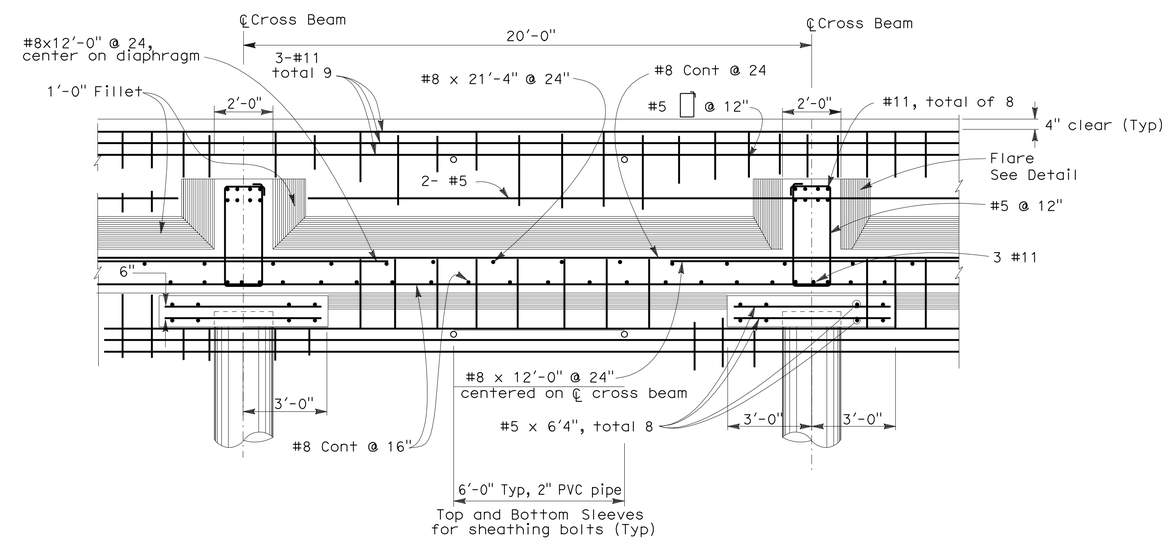

SECTION B - B

3/8" = 1'-0"

NOTE:
THE CONTRACTOR SHALL VERIFY ALL CONTROLLING FIELD DIMENSIONS BEFORE ORDERING OR FABRICATING ANY MATERIAL.

3 **REVISED PER ADDENDUM No. 3 DATED NOVEMBER 23, 2011**

DESIGN	BY M. Bahrami	CHECKED A. Kushkaki	
DETAILS	BY B. Ballesteros	CHECKED M. Bahrami	
QUANTITIES	BY M. Bahrami	CHECKED A. Kushkaki	

STATE OF CALIFORNIA
DEPARTMENT OF TRANSPORTATION

DIVISION OF MAINTENANCE
STRUCTURE MAINTENANCE AND INVESTIGATIONS

BRIDGE NO. 23-0015R
POST MILE 13.9/14.2 0.0/0.5

CARQUINEZ BRIDGE
FENDER REHABILITATION
NOSE DETAIL 1

STRUCTURES DESIGN DETAIL SHEET (ENGLISH) (REV. 10/25/05)

ORIGINAL SCALE IN INCHES FOR REDUCED PLANS 0 1 2 3

CU 04609
EA 049071

DISREGARD PRINTS BEARING EARLIER REVISION DATES → 06-29-09 09-31-09 11-03-10 10-13-11

REVISION DATES

SHEET 8 OF 28

FILE => 08_pier3nose1.dgn

USERNAME => s12614 DATE PLOTTED => 23-NOV-2011 TIME PLOTTED => 07:57

DIST	COUNTY	ROUTE	POST MILES TOTAL PROJECT	SHEET No	TOTAL SHEETS
04	CC,Sol	80	13.9/14.2, 0.0/0.5	23	42

REGISTERED CIVIL ENGINEER — DATE 11-17-11

6-27-11
PLANS APPROVAL DATE

The State of California or its officers or agents shall not be responsible for the accuracy or completeness of electronic copies of this plan sheet.

REGISTERED PROFESSIONAL ENGINEER — Michael Bahrami — No. 58795 — Exp. 6-30-13 — CIVIL — STATE OF CALIFORNIA

3

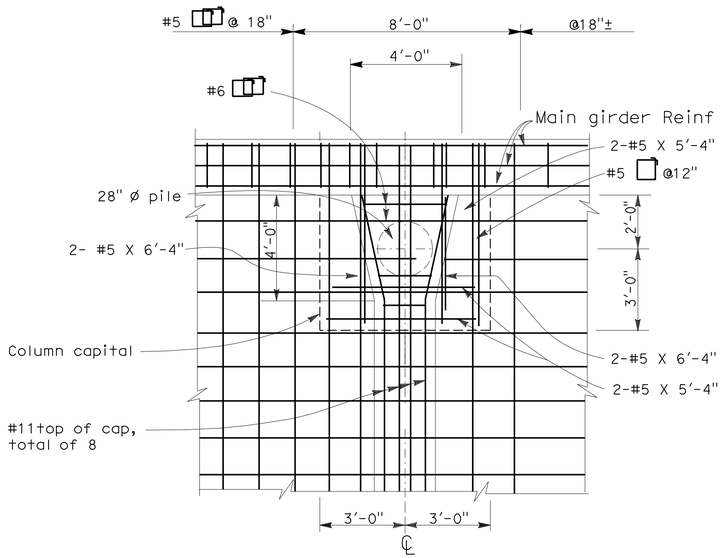

DETAIL - 1

3/8" = 1'-0"

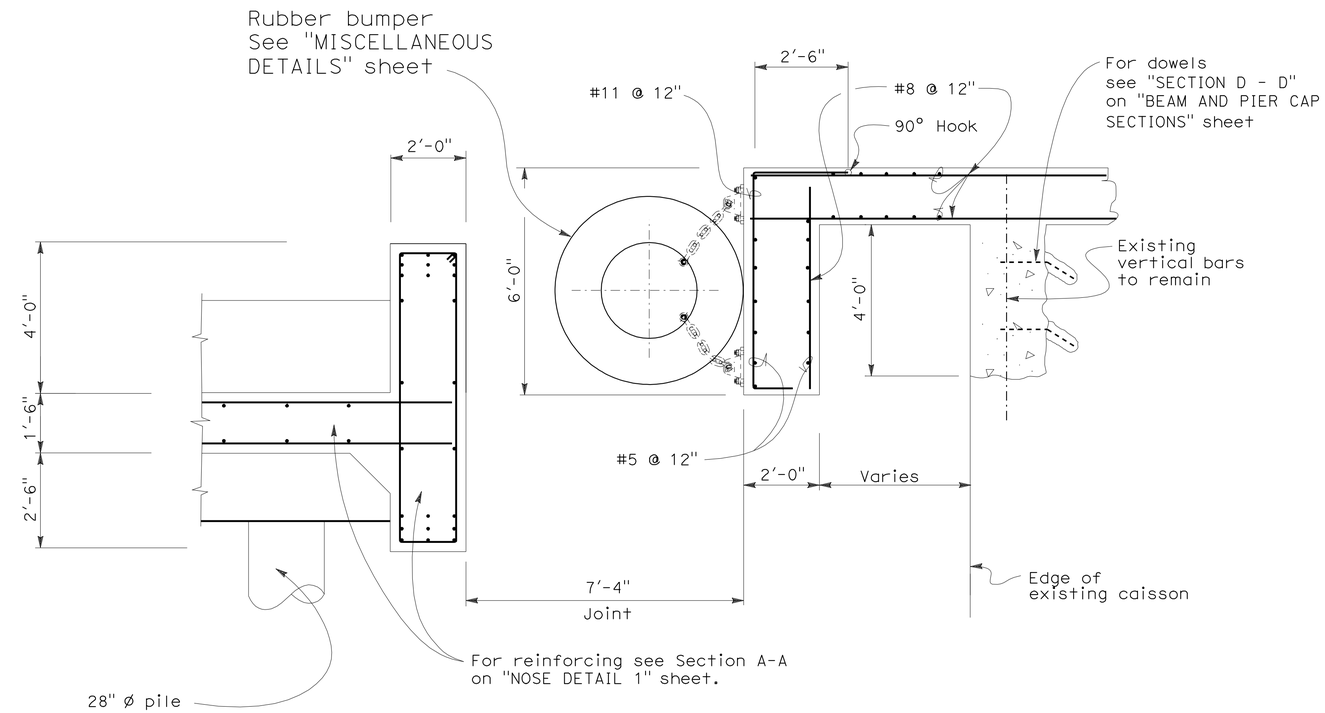

JOINT DETAIL

1/2" = 1'-0"

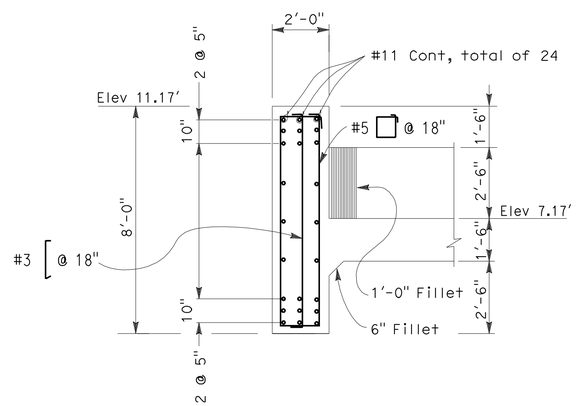

SECTION C - C

3/8" = 1'-0"

NOTE:
THE CONTRACTOR SHALL VERIFY ALL CONTROLLING FIELD DIMENSIONS BEFORE ORDERING OR FABRICATING ANY MATERIAL.

3 **REVISED PER ADDENDUM No. 3 DATED NOVEMBER 23, 2011**

DESIGN	BY A. Kushkaki	CHECKED M. Bahrami	
DETAILS	BY B. Ballesteros	CHECKED C. Lee	
QUANTITIES	BY M. Bahrami	CHECKED C. Lee	

STATE OF CALIFORNIA
DEPARTMENT OF TRANSPORTATION

DIVISION OF MAINTENANCE
STRUCTURE MAINTENANCE AND INVESTIGATIONS

BRIDGE NO. 23-0015R
POST MILE 13.9/14.2 0.0/0.5

CARQUINEZ BRIDGE
FENDER REHABILITATION
NOSE DETAIL 2

STRUCTURES DESIGN DETAIL SHEET (ENGLISH) (REV. 10/25/05)

ORIGINAL SCALE IN INCHES FOR REDUCED PLANS 0 1 2 3

CU 04609
EA 049071

DISREGARD PRINTS BEARING EARLIER REVISION DATES → 06-29-09 09-30-09 11-02-10 10-13-11

REVISION DATES

SHEET 9 OF 28

FILE => 09_pier3nose2.dgn

USERNAME => s121614 DATE PLOTTED => 23-NOV-2011 TIME PLOTTED => 07:57

DIST	COUNTY	ROUTE	POST MILES TOTAL PROJECT	SHEET No	TOTAL SHEETS
04	CC,Sol	80	13.9/14.2, 0.0/0.5	24	42

REGISTERED CIVIL ENGINEER 11-17-11 DATE

6-27-11
PLANS APPROVAL DATE

REGISTERED PROFESSIONAL ENGINEER Michael Bahrami No. 58795 Exp. 6-30-13 CIVIL STATE OF CALIFORNIA

The State of California or its officers or agents shall not be responsible for the accuracy or completeness of electronic copies of this plan sheet.

3

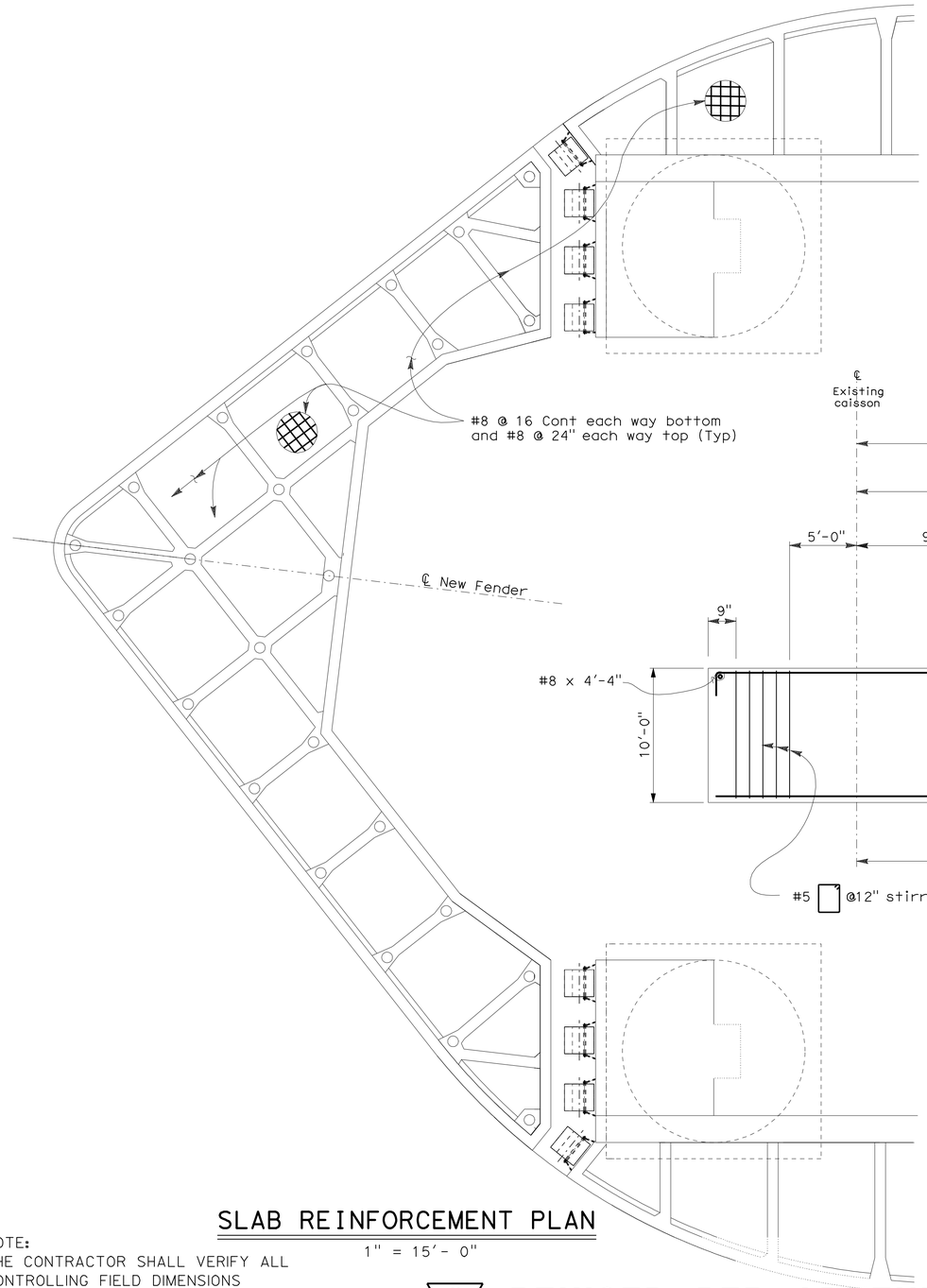

SLAB REINFORCEMENT PLAN

1" = 15'- 0"

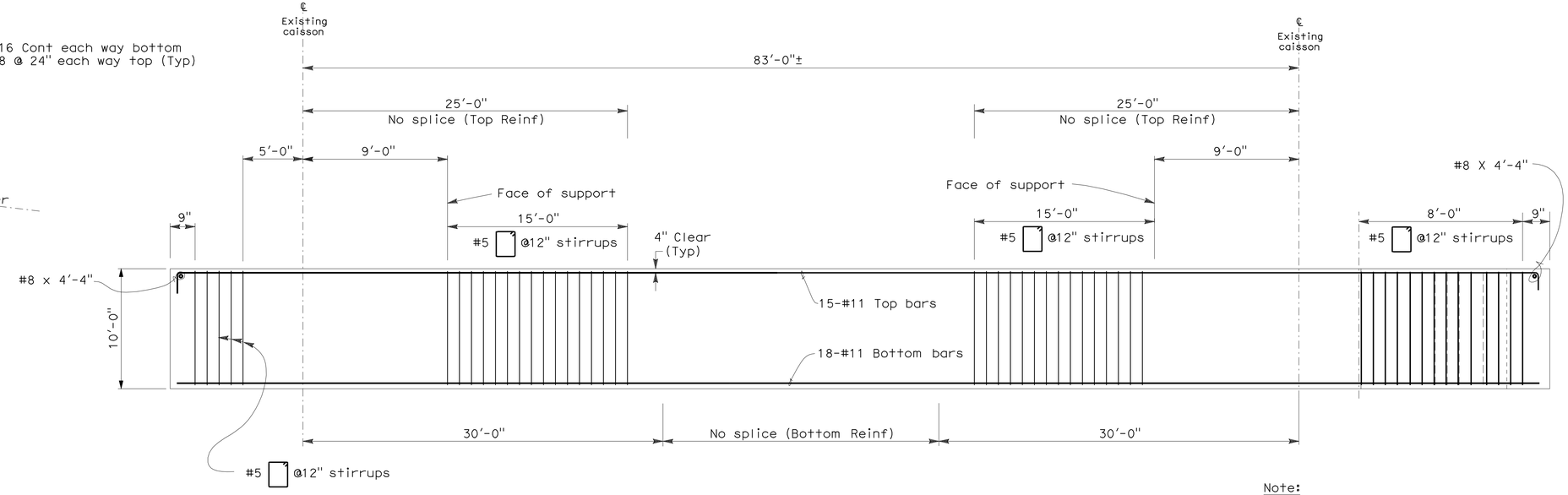

Note:

1. Existing caissons not shown for clarity
2. Face reinforcing not shown for clarity

TYPICAL BEAM REINFORCEMENT AND SPLICE DETAIL

3/16" = 1'-0"

NOTE:
THE CONTRACTOR SHALL VERIFY ALL CONTROLLING FIELD DIMENSIONS BEFORE ORDERING OR FABRICATING ANY MATERIAL.

3 **REVISED PER ADDENDUM No. 3 DATED NOVEMBER 23, 2011**

DESIGN	BY A. Kushkaki	CHECKED C. Lee	
DETAILS	BY B. Ballesteros	CHECKED M. Bahrami	
QUANTITIES	BY M. Bahrami	CHECKED C. Lee	

STATE OF CALIFORNIA
DEPARTMENT OF TRANSPORTATION

DIVISION OF MAINTENANCE
STRUCTURE MAINTENANCE AND INVESTIGATIONS

BRIDGE NO. 23-0015R
POST MILE 13.9/14.2 0.0/0.5

CARQUINEZ BRIDGE
FENDER REHABILITATION
NOSE DETAIL 3 AND BEAM SPLICE DETAIL

STRUCTURES DESIGN DETAIL SHEET (ENGLISH) (REV. 10/25/05)

ORIGINAL SCALE IN INCHES FOR REDUCED PLANS 0 1 2 3

CU 04609
EA 049071

DISREGARD PRINTS BEARING EARLIER REVISION DATES

REVISION DATES: 09-24-08 10-12-08 09-14-09 11-02-10 10-13-11

SHEET 10 OF 28

FILE => 10_pier3nose3.dgn

USERNAME => s12614 DATE PLOTTED => 23-NOV-2011 TIME PLOTTED => 07:57

DIST	COUNTY	ROUTE	POST MILES TOTAL PROJECT	SHEET No	TOTAL SHEETS
04	CC,Sol	80	13.9/14.2, 0.0/0.5	26	42

REGISTERED CIVIL ENGINEER 11-17-11 DATE

6-27-11
PLANS APPROVAL DATE

REGISTERED PROFESSIONAL ENGINEER Michael Bahrami No. 58795 Exp. 6-30-13 CIVIL STATE OF CALIFORNIA

The State of California or its officers or agents shall not be responsible for the accuracy or completeness of electronic copies of this plan sheet.

3

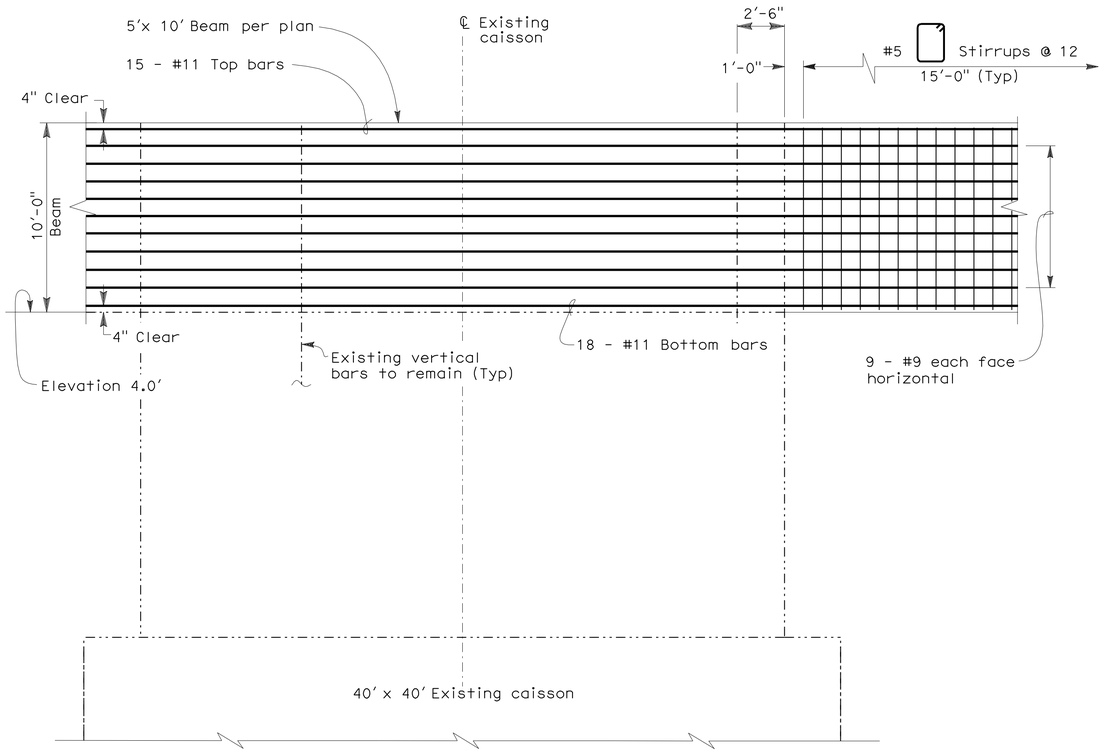

SECTION F - F
1/4 " = 1'-0"

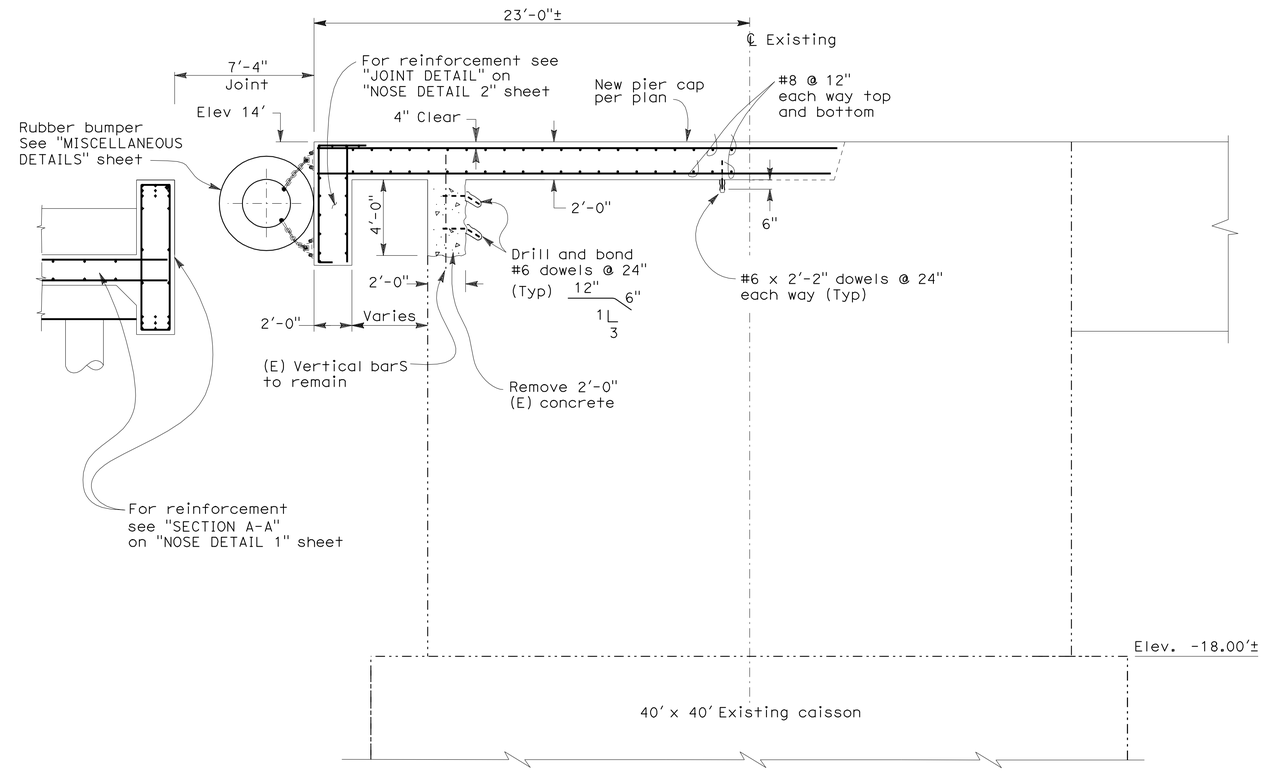

SECTION D - D
1/4 " = 1'-0"

NOTE:

THE CONTRACTOR SHALL VERIFY ALL CONTROLLING FIELD DIMENSIONS BEFORE ORDERING OR FABRICATING ANY MATERIAL.

3 **REVISED PER ADDENDUM No. 3 DATED NOVEMBER 23, 2011**

	BY		CHECKED	
DESIGN	BY	A. Kushkaki	CHECKED	C. Lee
DETAILS	BY	B. Ballesteros	CHECKED	A. Kushkaki
QUANTITIES	BY	M. Bahrami	CHECKED	C. Lee

STATE OF CALIFORNIA
DEPARTMENT OF TRANSPORTATION

DIVISION OF MAINTENANCE
STRUCTURE MAINTENANCE AND INVESTIGATIONS

BRIDGE NO. 23-0015R
POST MILE 13.9/14.2 0.0/0.5

CARQUINEZ BRIDGE
FENDER REHABILITATION
BEAM AND PIER CAP SECTIONS

STRUCTURES DESIGN DETAIL SHEET (ENGLISH) (REV. 10/25/05)

ORIGINAL SCALE IN INCHES FOR REDUCED PLANS 0 1 2 3

CU 04609
EA 049071

DISREGARD PRINTS BEARING EARLIER REVISION DATES 10-14-11 10-24-11

REVISION DATES

SHEET 12 OF 28

FILE => 12_connbeam.dgn

USERNAME => s12614 DATE PLOTTED => 23-NOV-2011 TIME PLOTTED => 07:57

DIST	COUNTY	ROUTE	POST MILES TOTAL PROJECT	SHEET No	TOTAL SHEETS
04	CC,Sol	80	13.9/14.2, 0.0/0.5	27	42

REGISTERED CIVIL ENGINEER — DATE 11-17-11

6-27-11
PLANS APPROVAL DATE

REGISTERED PROFESSIONAL ENGINEER — Michael Bahrami — No. 58795 — Exp. 6-30-13 — CIVIL — STATE OF CALIFORNIA

The State of California or its officers or agents shall not be responsible for the accuracy or completeness of electronic copies of this plan sheet.

3

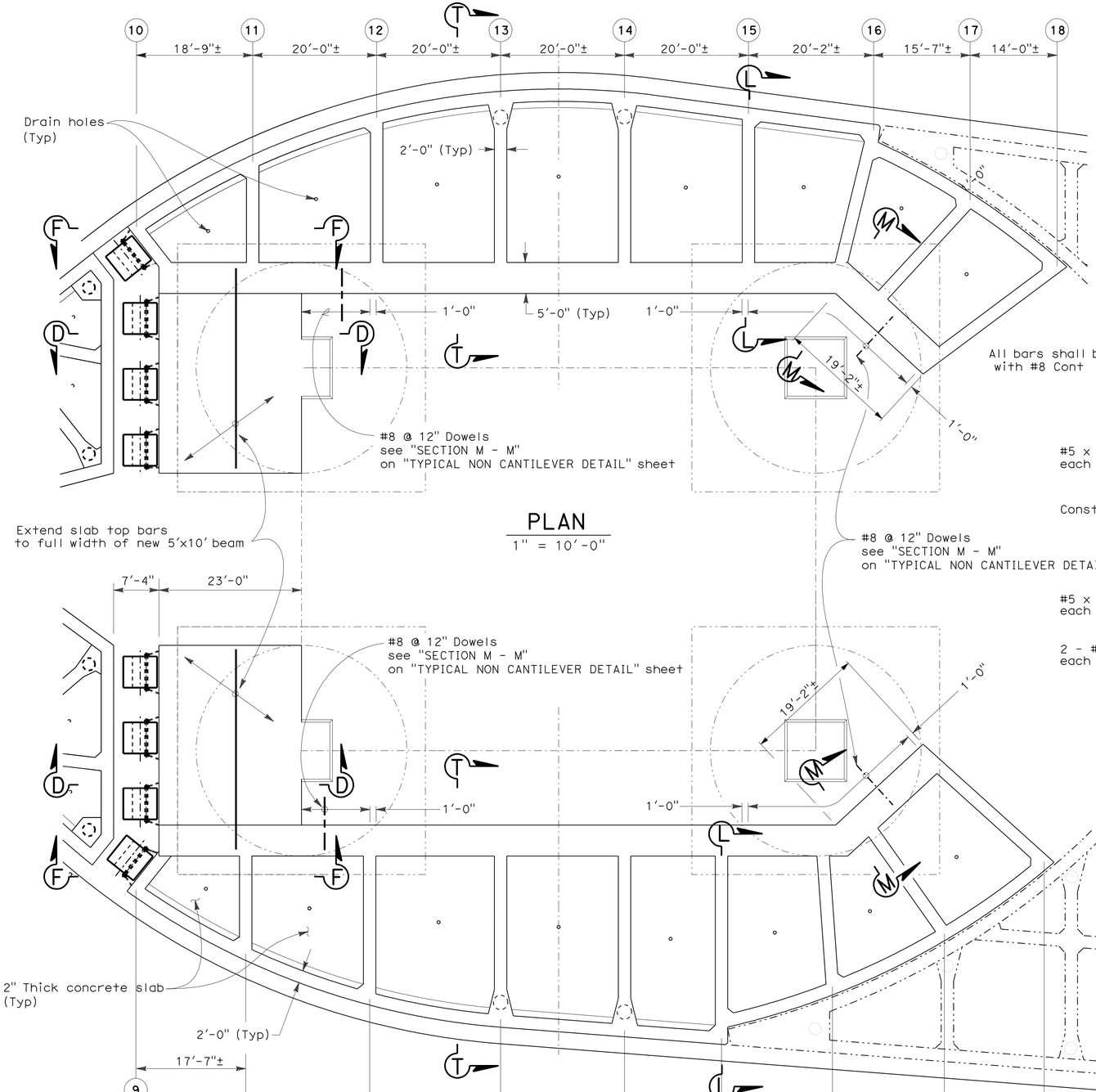

PLAN
1" = 10'-0"

PART PLAN
1" = 10'-0"

NOTE:
THE CONTRACTOR SHALL VERIFY ALL CONTROLLING FIELD DIMENSIONS BEFORE ORDERING OR FABRICATING ANY MATERIAL.

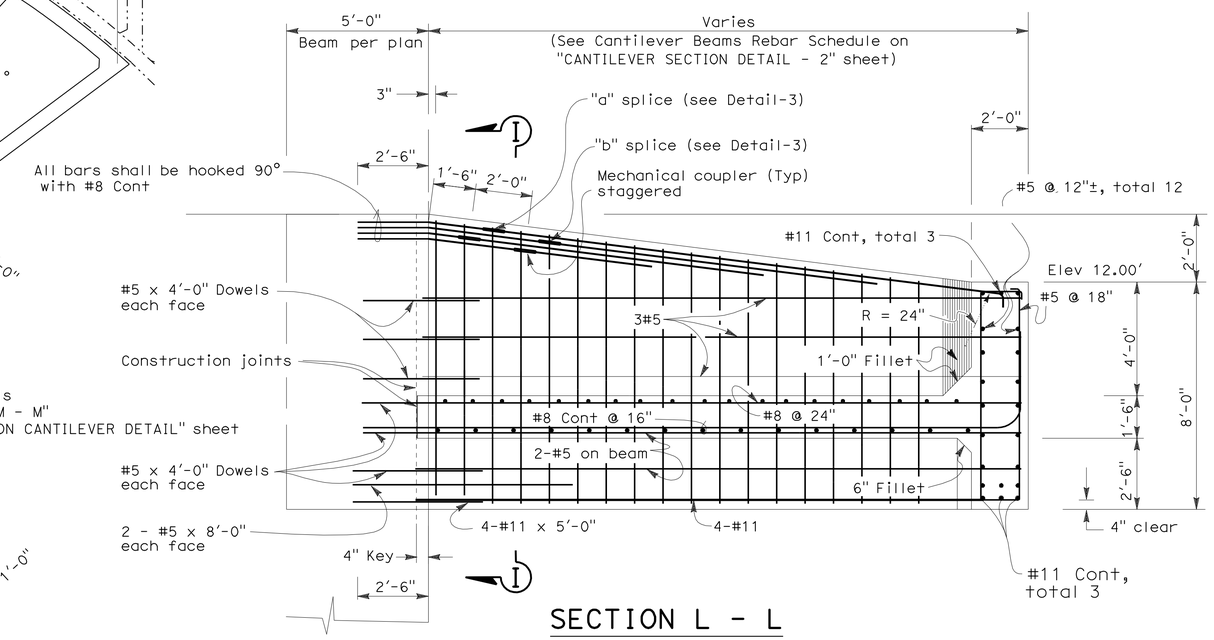

SECTION L - L
TYPICAL CANTILEVER BEAM
3/8" = 1'-0"

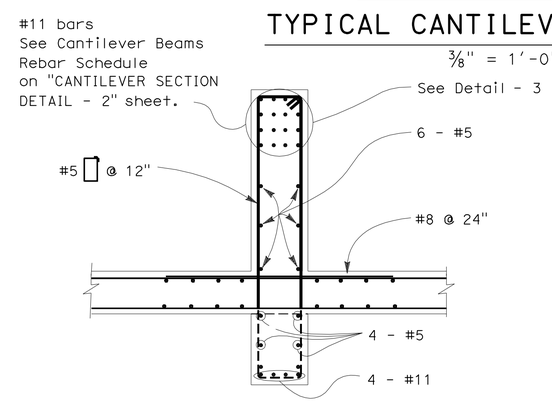

SECTION I - I
3/8" = 1'-0"

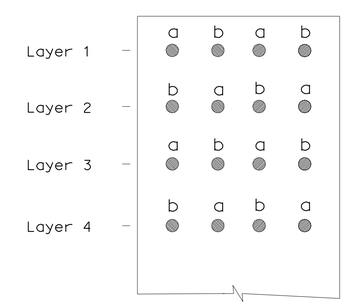

DETAIL - 3

(-) Beam numbers

3 **REVISED PER ADDENDUM No. 3 DATED NOVEMBER 23, 2011**

DESIGN	BY M. Bahrami	CHECKED A. Kushkaki	
DETAILS	BY B. Ballesteros	CHECKED M. Bahrami	
QUANTITIES	BY M. Bahrami	CHECKED C. Lee	

STATE OF CALIFORNIA
DEPARTMENT OF TRANSPORTATION

DIVISION OF MAINTENANCE
STRUCTURE MAINTENANCE AND INVESTIGATIONS

BRIDGE NO. 23-0015R
POST MILE 13.9/14.2 0.0/0.5

CARQUINEZ BRIDGE
FENDER REHABILITATION
CANTILEVER SECTION DETAIL-1

STRUCTURES DESIGN DETAIL SHEET (ENGLISH) (REV. 10/25/05)

ORIGINAL SCALE IN INCHES FOR REDUCED PLANS 0 1 2 3

CU 04609
EA 049071

DISREGARD PRINTS BEARING EARLIER REVISION DATES — REVISION DATES 10-02-08 09-31-09 11-02-10 10-13-11

SHEET 13 OF 28

FILE => 13_cntilvrdet.dgn

USERNAME => s12614 DATE PLOTTED => 23-NOV-2011 TIME PLOTTED => 07:57

DIST	COUNTY	ROUTE	POST MILES TOTAL PROJECT	SHEET No	TOTAL SHEETS
04	CC,Sol	80	13.9/14.2, 0.0/0.5	28	42

REGISTERED CIVIL ENGINEER 11-17-11 DATE

6-27-11
PLANS APPROVAL DATE

REGISTERED PROFESSIONAL ENGINEER Michael Bahrami No. 58795 Exp. 6-30-13 CIVIL STATE OF CALIFORNIA

The State of California or its officers or agents shall not be responsible for the accuracy or completeness of electronic copies of this plan sheet.

3

CANTILEVER BEAMS REBAR SCHEDULE

BEAM	BEAM LENGTH (FACE TO FACE)	Layer 1	Layer 2	Layer 3	Layer 4	STIRRUPS
1	23′-11″±	4 #11	4 #11 x 15′	4 #11 x 10′		#5 @ 18″
18	24′-8″±					
2	17′-9″±	4 #11	4 #11 x 15′			#5 @ 18″
17	18′-8″±					
3	22′-6″±	4 #11	4 #11 x 15′	4 #11 x 10′		#5 @ 18″
16	23′-0″±					
4	30′-4″±	4 #11	4 #11 x 20′	4 #11 x 15′	4 #11 x 10′	#5 @ 18″
15	25′-0″±					
5	29′-0″±	4 #11	4 #11 x 20′	4 #11 x 15′	4 #11 x 10′	#5 @ 18″
14	27′-6″±					
6	27′-8″±	4 #11	4 #11 x 20′	4 #11 x 15′	4 #11 x 10′	#5 @ 18″
13	27′-8″±					
7	25′-0″±	4 #11	4 #11 x 20′	4 #11 x 15′	4 #11 x 10′	#5 @ 18″
12	24′-4″±					
8	16′-10″±	4 #11	4 #11 x 15′			#5 @ 18″
11	17′-4″±					
9	10′-5″±	4 #11	4 #11 x 15′			#5 @ 18″
10	11′-9″±					

Note:

1. Length of rebars shown are measured from face of pier cap.
2. For rebar layout See, "CANTILEVER SECTION DETAIL-1" sheet.

NOTE:
THE CONTRACTOR SHALL VERIFY ALL CONTROLLING FIELD DIMENSIONS BEFORE ORDERING OR FABRICATING ANY MATERIAL.

3 **REVISED PER ADDENDUM No. 3 DATED NOVEMBER 23, 2011**

DESIGN	BY M. Bahrami	CHECKED A. Kushkaki	
DETAILS	BY B. Ballesteros	CHECKED M. Bahrami	
QUANTITIES	BY M. Bahrami	CHECKED A. Kushkaki	

STATE OF CALIFORNIA
DEPARTMENT OF TRANSPORTATION

DIVISION OF MAINTENANCE
STRUCTURE MAINTENANCE AND INVESTIGATIONS

BRIDGE NO. 23-0015R
POST MILE 13.9/14.2 0.0/0.5

CARQUINEZ BRIDGE
FENDER REHABILITATION
CANTILEVER SECTION DETAIL - 2

STRUCTURES DESIGN DETAIL SHEET (ENGLISH) (REV. 10/25/05)

ORIGINAL SCALE IN INCHES FOR REDUCED PLANS 0 1 2 3

CU 04609
EA 049071

DISREGARD PRINTS BEARING EARLIER REVISION DATES → 01-26-09 09-31-09 11-02-10

REVISION DATES

SHEET 14 OF 28

FILE => 14_cntilvrdet.dgn

USERNAME => s12614 DATE PLOTTED => 23-NOV-2011 TIME PLOTTED => 07:57

DIST	COUNTY	ROUTE	POST MILES TOTAL PROJECT	SHEET No	TOTAL SHEETS
04	CC,Sol	80	13.9/14.2, 0.0/0.5	29	42

REGISTERED CIVIL ENGINEER 12-14-10 DATE

6-27-11
PLANS APPROVAL DATE

REGISTERED PROFESSIONAL ENGINEER Michael Bahrami No. 58795 Exp. 6-30-13 CIVIL STATE OF CALIFORNIA

The State of California or its officers or agents shall not be responsible for the accuracy or completeness of electronic copies of this plan sheet.

3

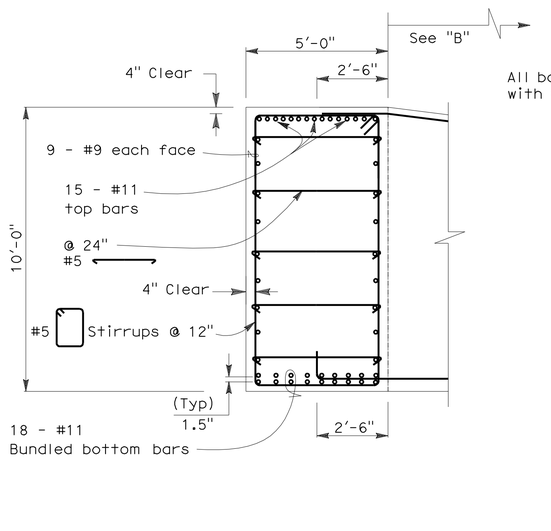

A

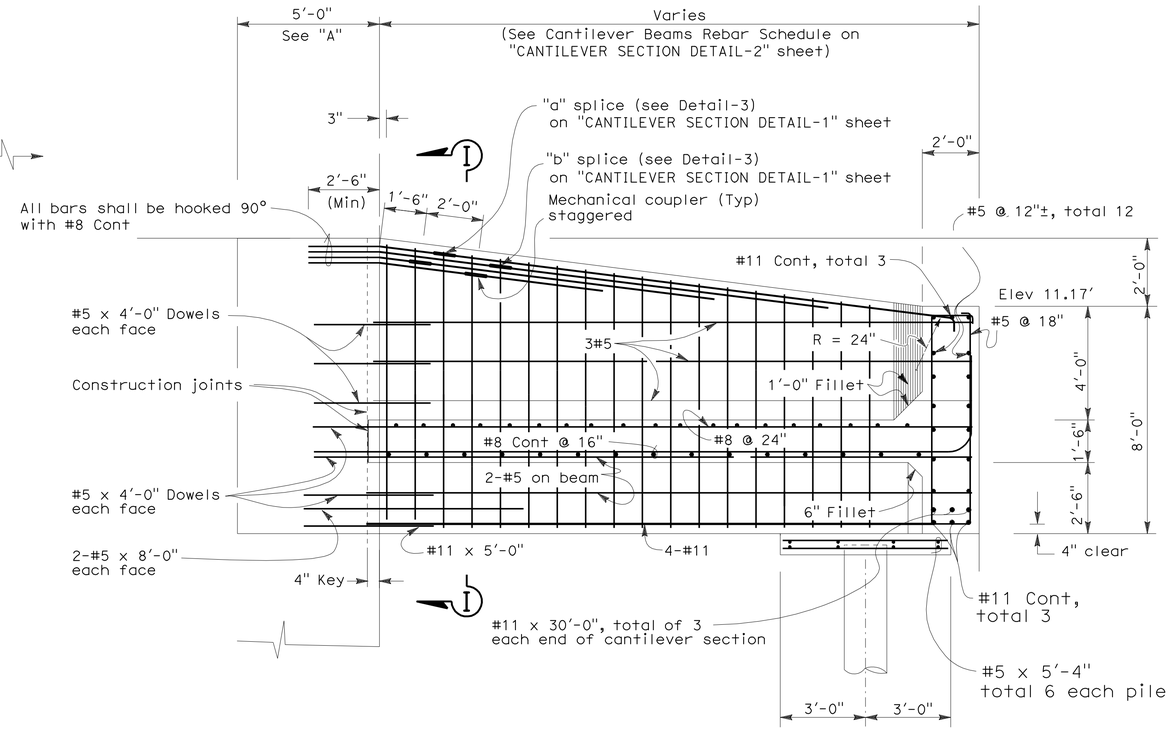

B

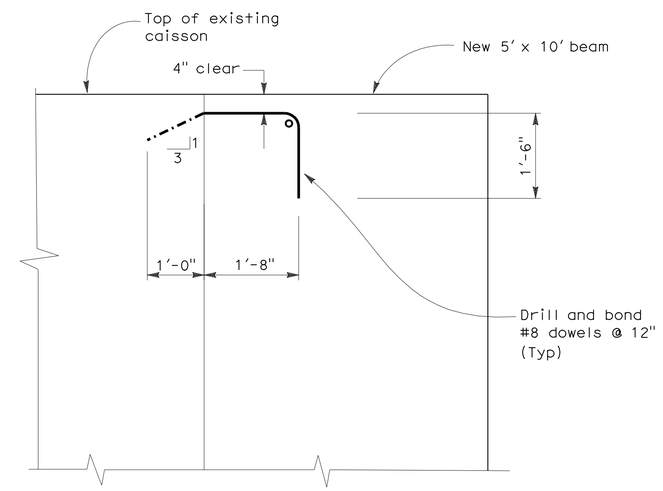

SECTION T - T

TYPICAL NON CANTILEVER BEAM (BEAM No. 5, 6, 13, 14)

3/8" = 1'-0"

SECTION M - M

3/4" = 1'-0"

NOTE:
THE CONTRACTOR SHALL VERIFY ALL CONTROLLING FIELD DIMENSIONS BEFORE ORDERING OR FABRICATING ANY MATERIAL.

3 **REVISED PER ADDENDUM No. 3 DATED NOVEMBER 23, 2011**

DESIGN	BY A. Kushkaki	CHECKED C. Lee	
DETAILS	BY B. Ballesteros	CHECKED A. Kushkaki	
QUANTITIES	BY M. Bahrami	CHECKED C. Lee	

STATE OF CALIFORNIA
DEPARTMENT OF TRANSPORTATION

DIVISION OF MAINTENANCE
STRUCTURE MAINTENANCE AND INVESTIGATIONS

BRIDGE NO. 23-0015R
POST MILE 13.9/14.2 0.0/0.5

CARQUINEZ BRIDGE
FENDER REHABILITATION
TYPICAL NON CANTILEVER DETAIL

STRUCTURES DESIGN DETAIL SHEET (ENGLISH) (REV. 10/25/05)

ORIGINAL SCALE IN INCHES FOR REDUCED PLANS 0 1 2 3

CU 04609
EA 049071

DISREGARD PRINTS BEARING EARLIER REVISION DATES

REVISION DATES: 07-20-09 09-11-09 10-13-11

SHEET 15 OF 28

FILE => 15_boxgirder.dgn

USERNAME => s121614 DATE PLOTTED => 23-NOV-2011 TIME PLOTTED => 07:58

DIST	COUNTY	ROUTE	POST MILES TOTAL PROJECT	SHEET No	TOTAL SHEETS
04	CC,Sol	80	13.9/14.2, 0.0/0.5	30	42

REGISTERED CIVIL ENGINEER 11-17-11 DATE

6-27-11
PLANS APPROVAL DATE

REGISTERED PROFESSIONAL ENGINEER Michael Bahrami No. 58795 Exp. 6-30-13 CIVIL STATE OF CALIFORNIA

The State of California or its officers or agents shall not be responsible for the accuracy or completeness of electronic copies of this plan sheet.

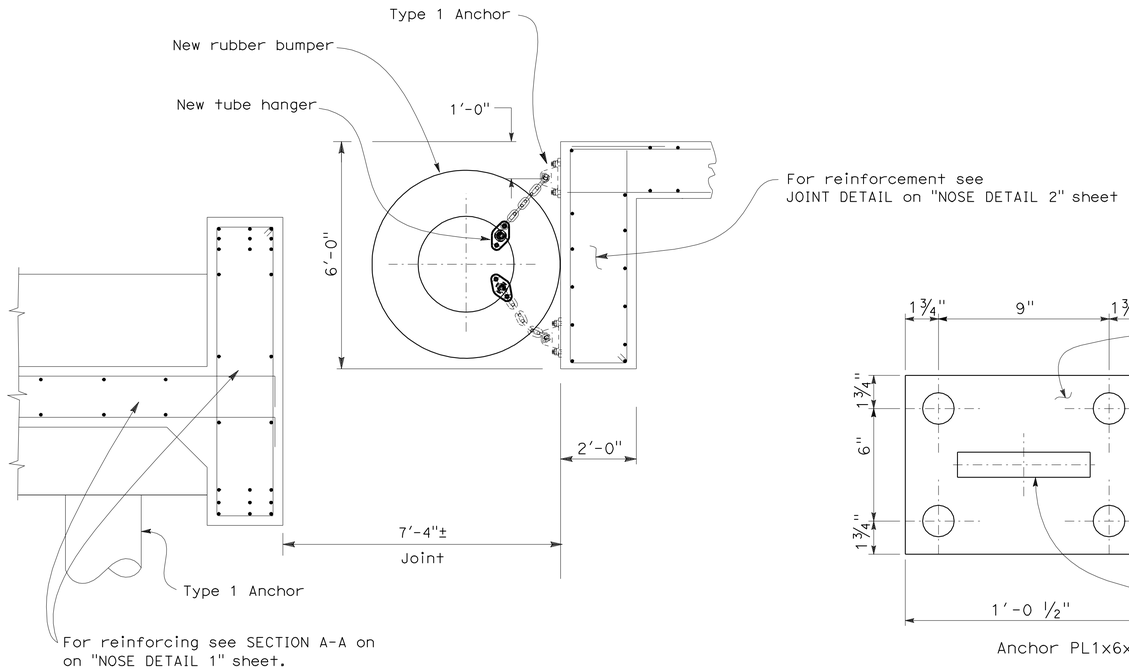

RUBBER BUMPER (TYPICAL) 3

1/2" = 1'-0"

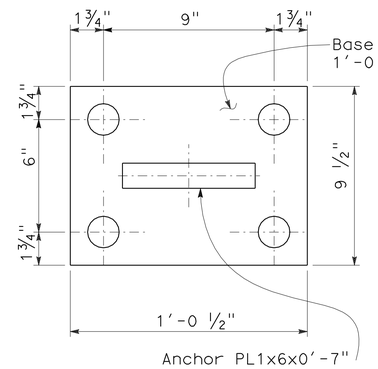

TOP VIEW

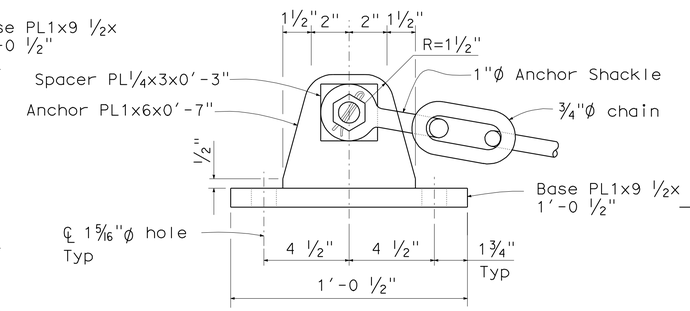

SIDE VIEW

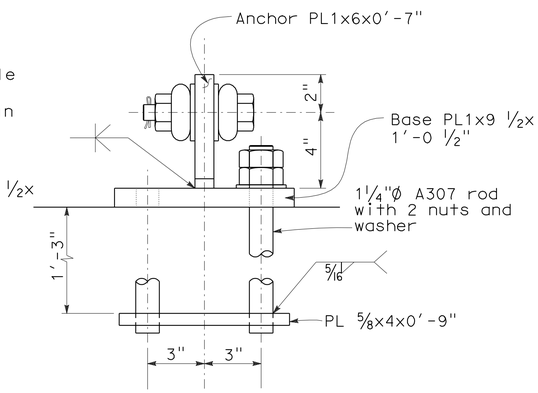

END VIEW

Method A attachment shown

TYPE I ANCHOR

3' = 1'-0"

Type I shown, Type II similar except as noted.

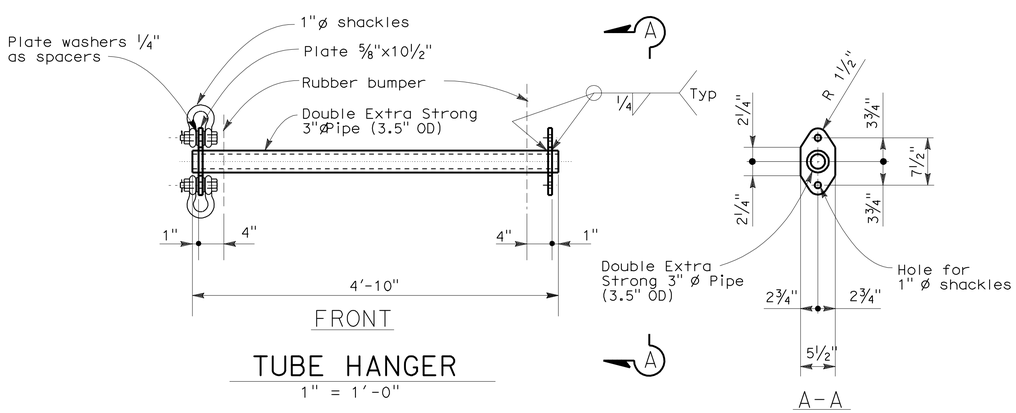

TUBE HANGER

1" = 1'-0"

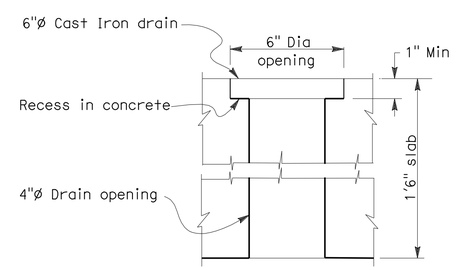

DRAIN DETAILS

3" = 1'-0"

NOTE:
THE CONTRACTOR SHALL VERIFY ALL CONTROLLING FIELD DIMENSIONS BEFORE ORDERING OR FABRICATING ANY MATERIAL.

3 **REVISED PER ADDENDUM No. 3 DATED NOVEMBER 23, 2011**

DESIGN	BY R. Castro	CHECKED A. Kushkaki	
DETAILS	BY B. Ballesteros	CHECKED M. Bahrami	
QUANTITIES	BY R. Castro	CHECKED H. Su	

STATE OF CALIFORNIA
DEPARTMENT OF TRANSPORTATION

DIVISION OF MAINTENANCE
STRUCTURE MAINTENANCE AND INVESTIGATIONS

BRIDGE NO. 23-0015R
POST MILE 13.9/14.2 0.0/0.5

CARQUINEZ BRIDGE
FENDER REHABILITATION
MISCELLANEOUS DETAILS

STRUCTURES DESIGN DETAIL SHEET (ENGLISH) (REV. 10/25/05)

ORIGINAL SCALE IN INCHES FOR REDUCED PLANS 0 1 2 3

CU 04609
EA 049071

DISREGARD PRINTS BEARING EARLIER REVISION DATES

REVISION DATES: 09-24-08 10-12-08 06-28-09 07-28-10 11-03-10 10-13-11

SHEET 16 OF 28

FILE => 16_miscdtl.dgn

USERNAME => s126614 DATE PLOTTED => 23-NOV-2011 TIME PLOTTED => 07:58

DIST	COUNTY	ROUTE	POST MILES TOTAL PROJECT	SHEET No	TOTAL SHEETS
04	CC,Sol	80	13.9/14.2, 0.0/0.5	31	42

REGISTERED CIVIL ENGINEER 11-17-11 DATE

6-27-11
PLANS APPROVAL DATE

REGISTERED PROFESSIONAL ENGINEER Michael Bahrami No. 58795 Exp. 6-30-13 CIVIL STATE OF CALIFORNIA

The State of California or its officers or agents shall not be responsible for the accuracy or completeness of electronic copies of this plan sheet.

3

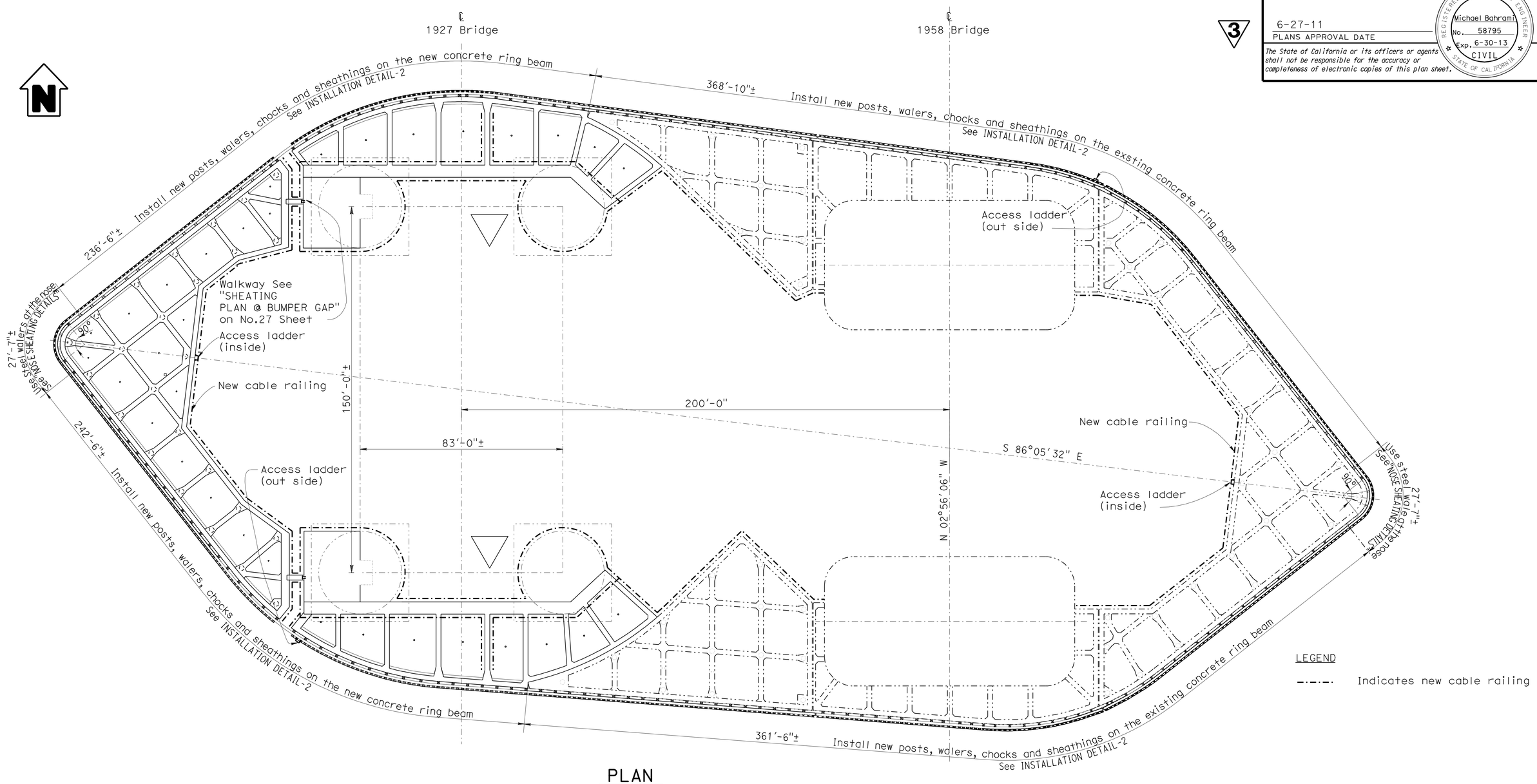

PLAN
1" = 20'

LEGEND

Indicates new cable railing

NOTE:
THE CONTRACTOR SHALL VERIFY ALL CONTROLLING FIELD DIMENSIONS BEFORE ORDERING OR FABRICATING ANY MATERIAL.

3 **REVISED PER ADDENDUM No. 3 DATED NOVEMBER 23, 2011**

	BY	CHECKED
DESIGN	R. Castro	M. Bahrami
DETAILS	M. Yu	R. Castro
QUANTITIES	R. Castro	H. Su

STATE OF CALIFORNIA
DEPARTMENT OF TRANSPORTATION

DIVISION OF STRUCTURES
STRUCTURE MAINTENANCE AND INVESTIGATIONS

CU 04609
EA 049071

BRIDGE NO. 23-0015R
POST MILE 13.9/14.2 0.0/0.5

CARQUINEZ BRIDGE
FENDER REHABILITATION
NEW SHEATHINGS LAYOUT - PIER 3

STRUCTURES DESIGN DETAIL SHEET (ENGLISH) (REV. 2-2-05)

ORIGINAL SCALE IN INCHES FOR REDUCED PLANS 0 1 2 3

DISREGARD PRINTS BEARING EARLIER REVISION DATES

REVISION DATES: 1-28-09 3-09-09 8-31-09 1-05-10 5-04-10 08-25-10 11-03-10 03-28-11 10-04-11 10-13-11

SHEET 17 OF 28

FILE => 17-gp-layout.dgn

USERNAME => s12614 DATE PLOTTED => 23-NOV-2011 TIME PLOTTED => 07:58

DIST	COUNTY	ROUTE	POST MILES TOTAL PROJECT	SHEET No	TOTAL SHEETS
04	CC,Sol	80	13.9/14.2, 0.0/0.5	37	42

REGISTERED CIVIL ENGINEER 11-17-11 DATE

6-27-11
PLANS APPROVAL DATE

The State of California or its officers or agents shall not be responsible for the accuracy or completeness of electronic copies of this plan sheet.

REGISTERED PROFESSIONAL ENGINEER Michael Bahrami No. 58795 Exp. 6-30-13 CIVIL STATE OF CALIFORNIA

Notes:
1. All holes and slots in the walers shall be made in the shop, prior to galvanizing.
2. The chocks located at the points of tangency (PT) differ in length from each other.
3. For DETAIL 2, see "INSTALLATION DETAIL - 1" sheet.
4. All sheathing hardware material shall be ASTM 276, Type 316 stainless steel.
5. All structural steel shape, angle and plate shall be hot dip galvanized.

LEGEND:
RR Plastic Lumber: Reinforced Recycled Plastic Lumber
HSS: Hollow Structural Steel

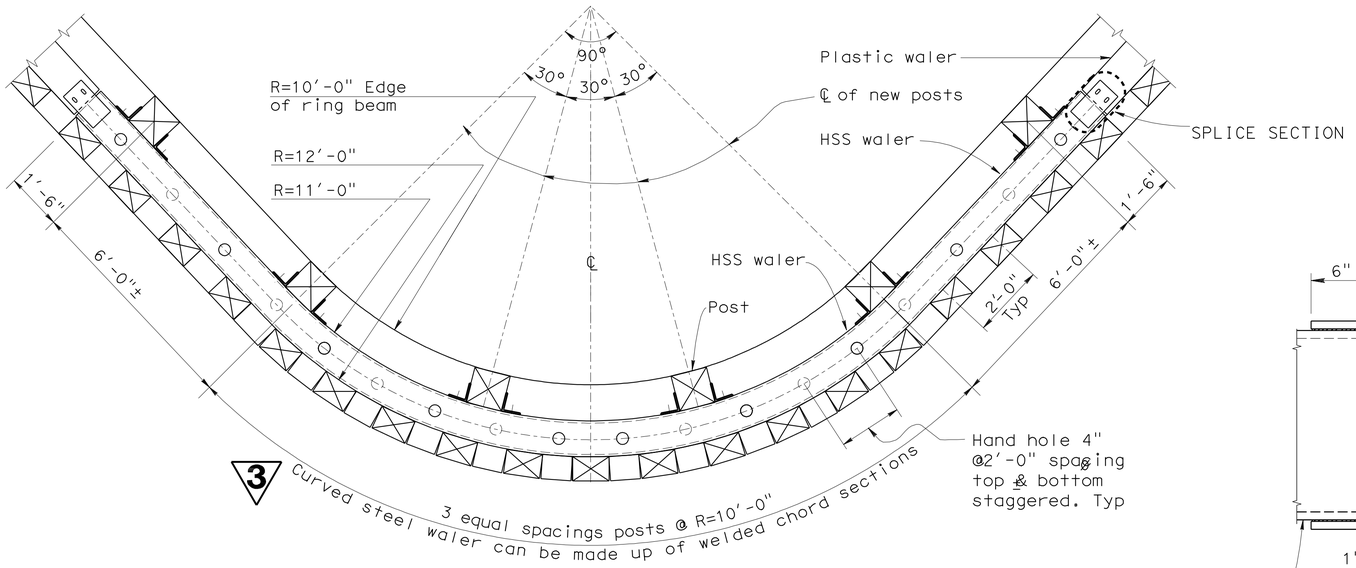

SECTION A-A
at nose
½"=1'-0"

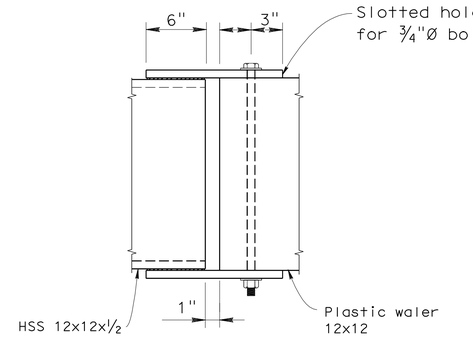

DETAIL 1
1½"=1'-0"

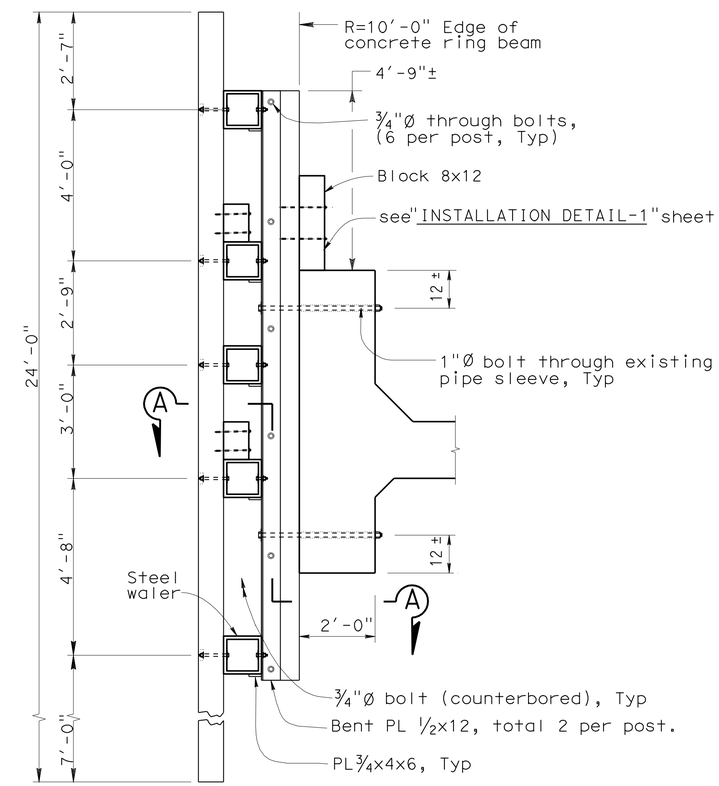

AT NOSE

ELEVATION
½"=1'-0"

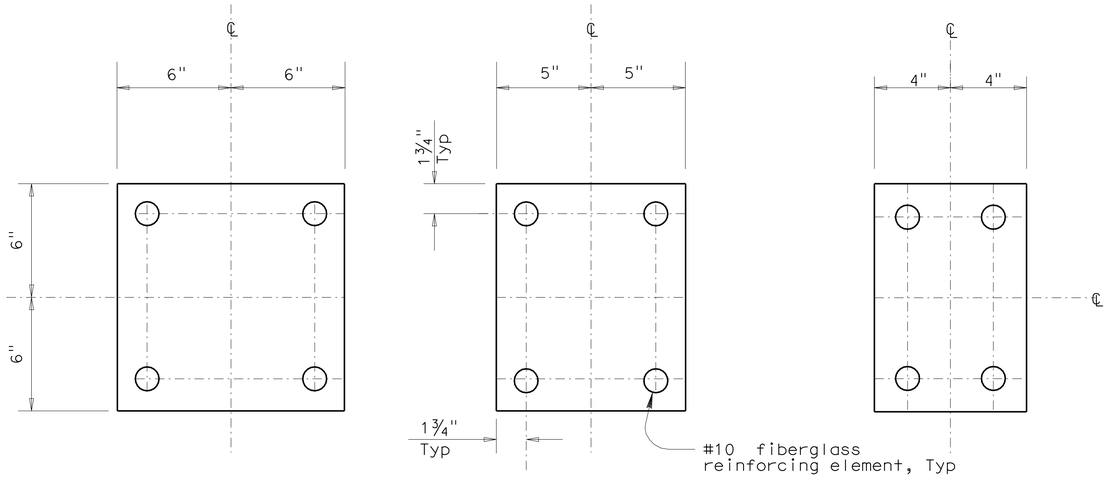

12x12 10x12 8x12

TYPICAL RR PLASTIC LUMBER SECTION
3"=1'-0"

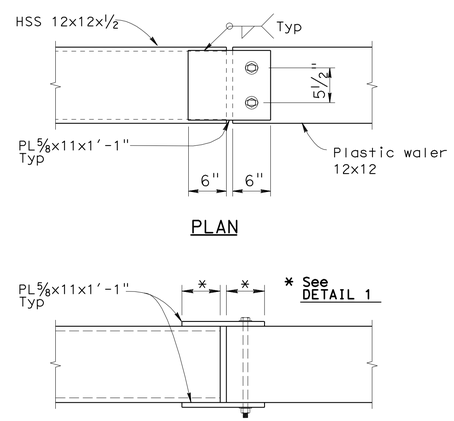

SPLICE SECTION
1"=1'-0"

NOTE:
THE CONTRACTOR SHALL VERIFY ALL CONTROLLING FIELD DIMENSIONS BEFORE ORDERING OR FABRICATING ANY MATERIAL.

3 **REVISED PER ADDENDUM No. 3 DATED NOVEMBER 23, 2011**

	BY	CHECKED
DESIGN	R. Castro	M. Bahrami
DETAILS	M. Yu	R. Castro
QUANTITIES	R. Castro	M. Bahrami

STATE OF CALIFORNIA DEPARTMENT OF TRANSPORTATION

DIVISION OF STRUCTURES STRUCTURE MAINTENANCE AND INVESTIGATIONS

BRIDGE NO. 23-0015R
POST MILE 3.9/14.2 0.0/0.5

CARQUINEZ BRIDGE
FENDER REHABILITATION
NOSE SHEATHING DETAILS

STRUCTURES DESIGN DETAIL SHEET (ENGLISH) (REV. 2-2-05)

ORIGINAL SCALE IN INCHES FOR REDUCED PLANS 0 1 2 3

CU 04609
EA 049071

DISREGARD PRINTS BEARING EARLIER REVISION DATES

REVISION DATES: 3-09-09 8-31-09 9-14-09 1-06-10 5-04-10 12-10-10 5-11-11 03-25-11

SHEET 23 OF 28

FILE => 23-nose-det.dgn

USERNAME => s121614 DATE PLOTTED => 23-NOV-2011 TIME PLOTTED => 07:58

DIST	COUNTY	ROUTE	POST MILES TOTAL PROJECT	SHEET No	TOTAL SHEETS
04	CC,Sol	80	13.9/14.2, 0.0/0.5	40	42

REGISTERED CIVIL ENGINEER 11-17-11 DATE

6-27-11
PLANS APPROVAL DATE

REGISTERED PROFESSIONAL ENGINEER Michael Bahrami No. 58795 Exp. 6-30-13 CIVIL STATE OF CALIFORNIA

The State of California or its officers or agents shall not be responsible for the accuracy or completeness of electronic copies of this plan sheet.

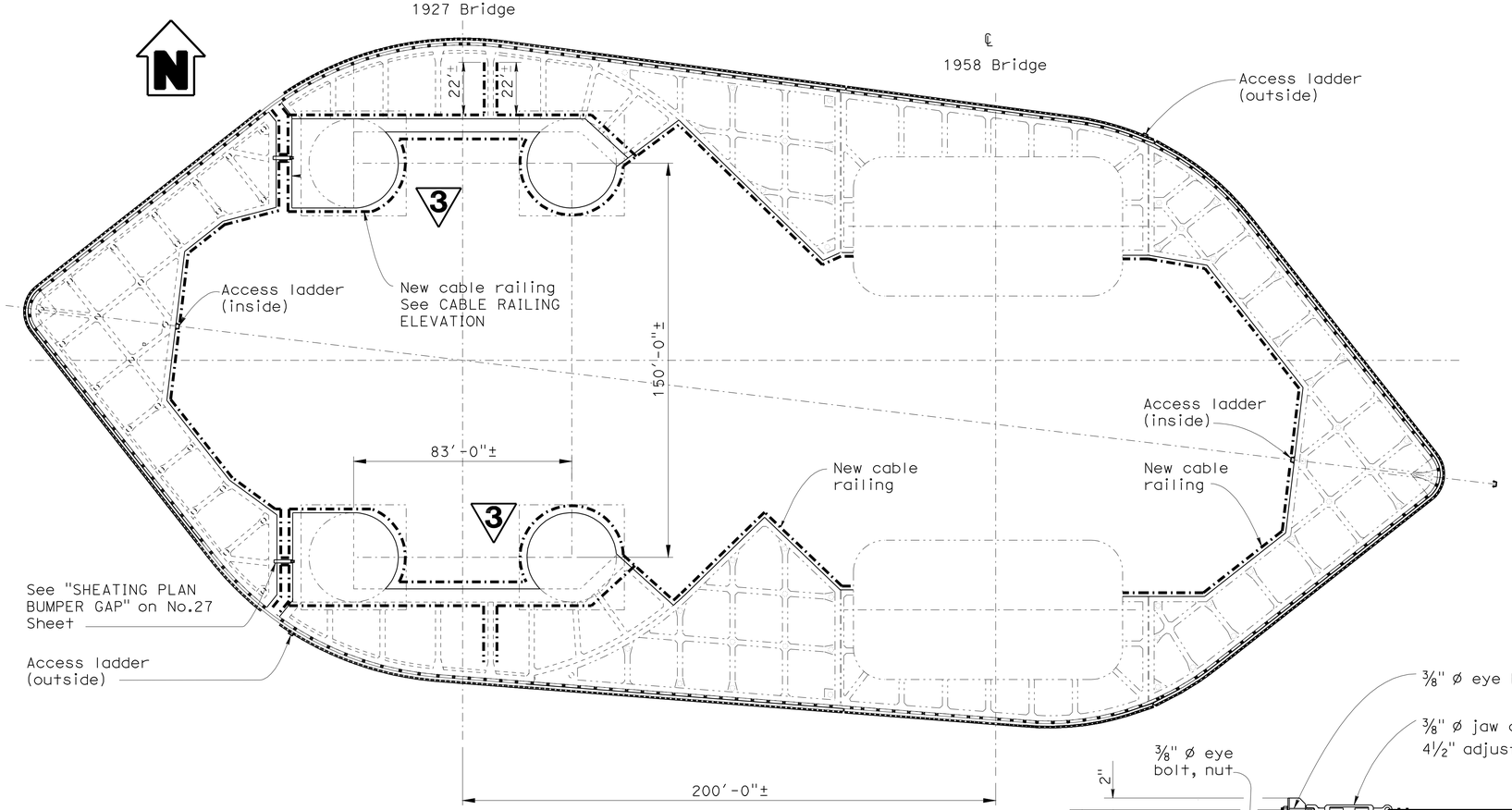

RAILING PLAN
No Scale

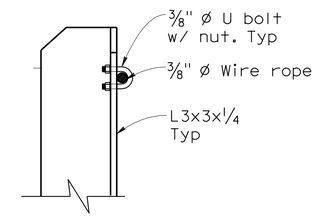

U BOLT DETAIL
Scale: 3"=1'-0"

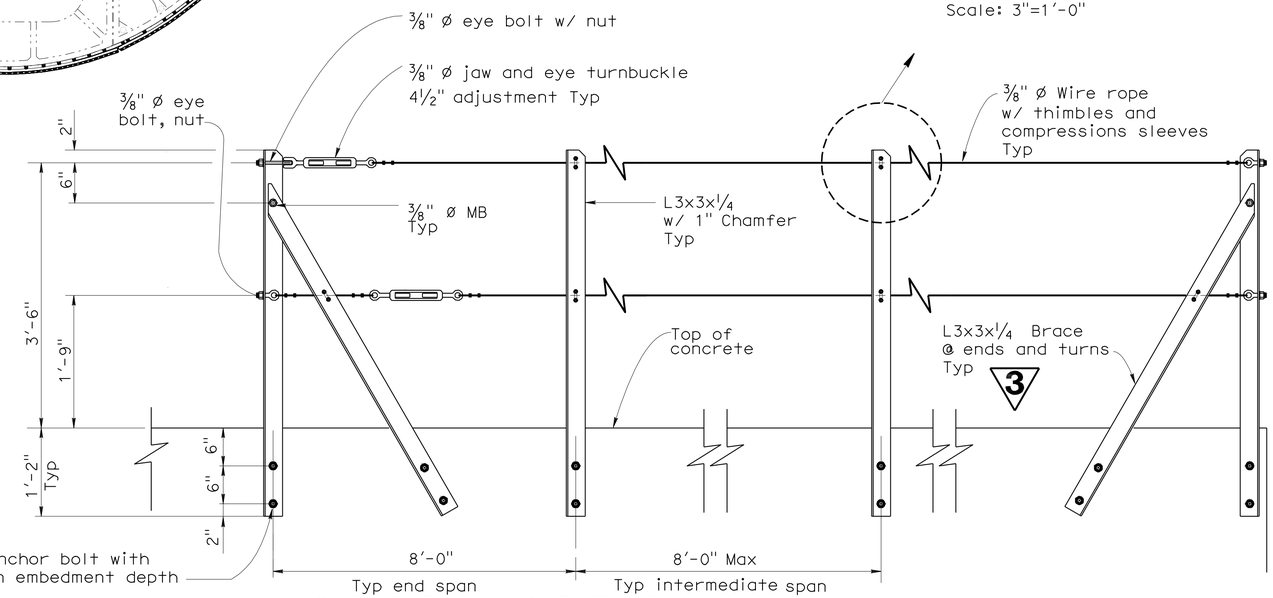

CABLE RAILING ELEVATION
Scale: 1"=1'-0"

Note:
1. All cable railing hardware wire rope, eye bolt, turnbuckle, U-bolt including angle-post and anchor bolt shall be hot dip galvanized.

NOTE:
THE CONTRACTOR SHALL VERIFY ALL CONTROLLING FIELD DIMENSIONS BEFORE ORDERING OR FABRICATING ANY MATERIAL.

3 REVISED PER ADDENDUM No. 3 DATED NOVEMBER 23, 2011

	BY	CHECKED
DESIGN	R. Castro	M. Bahrami
DETAILS	M. Yu	R. Castro
QUANTITIES	R. Castro	H. Su

STATE OF CALIFORNIA DEPARTMENT OF TRANSPORTATION

DIVISION OF STRUCTURES STRUCTURE MAINTENANCE AND INVESTIGATIONS

BRIDGE NO. 23-0015R
POST MILE 13.9/14.2 0.0/0.5

CARQUINEZ BRIDGE
FENDER REHABILITATION
PIER 3 - NEW CABLE RAILING

STRUCTURES DESIGN DETAIL SHEET (ENGLISH) (REV. 2-2-05)

ORIGINAL SCALE IN INCHES FOR REDUCED PLANS 0 1 2 3

CU 04609
EA 049071

DISREGARD PRINTS BEARING EARLIER REVISION DATES

REVISION DATES: 1-28-09 3-04-09 8-31-09 1-05-10 5-04-10 3-11-11 03-25-11 10-13-11

SHEET 26 OF 28

FILE => 26-railing-layout.dgn

USERNAME => s121614 DATE PLOTTED => 23-NOV-2011 TIME PLOTTED => 07:58

DIST	COUNTY	ROUTE	POST MILES TOTAL PROJECT	SHEET No	TOTAL SHEETS
04	CC,Sol	80	13.9/14.2, 0.0/0.5	41	42

REGISTERED CIVIL ENGINEER 11-17-11 DATE

6-27-11
PLANS APPROVAL DATE

The State of California or its officers or agents shall not be responsible for the accuracy or completeness of electronic copies of this plan sheet.

REGISTERED PROFESSIONAL ENGINEER Michael Bahrami No. 58795 Exp. 6-30-13 CIVIL STATE OF CALIFORNIA

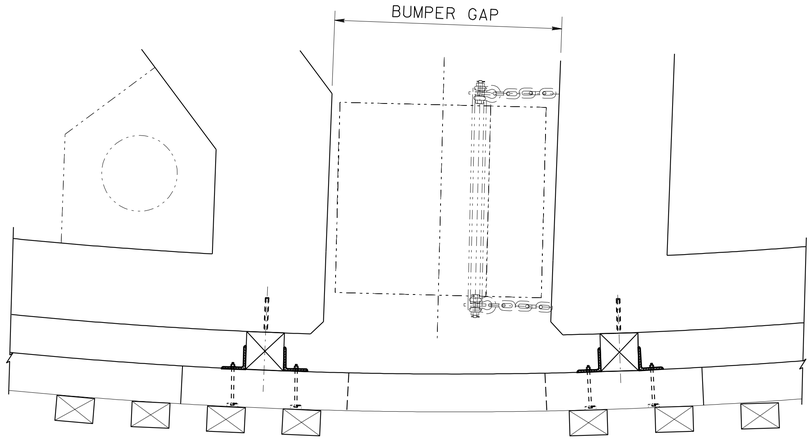

SHEATHING PLAN
3/8" = 1'-0"

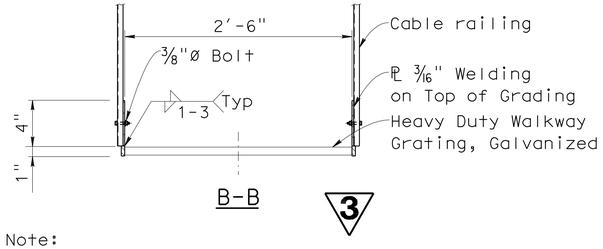

B-B 3

Note:
1. All walkway bolts and plates are galvanized.
2. Adjust walkway location to avoid the bumpers.

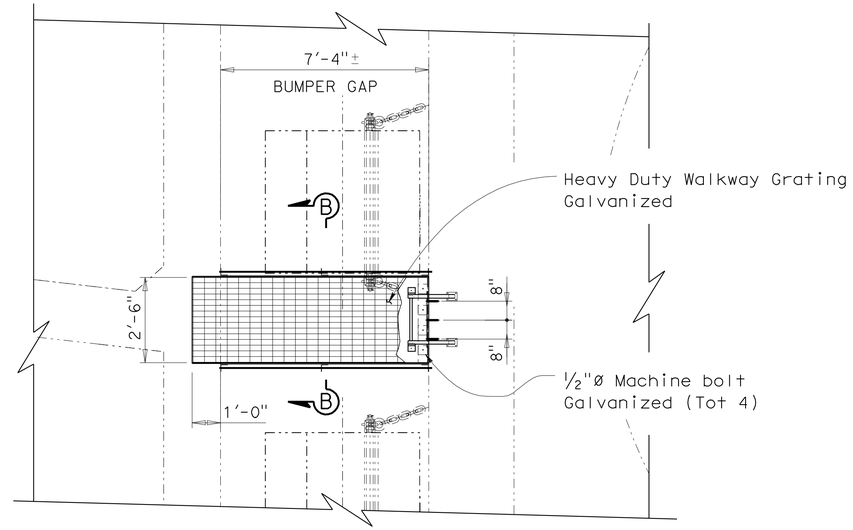

WALKWAY PLAN 3
3/8" = 1'-0"

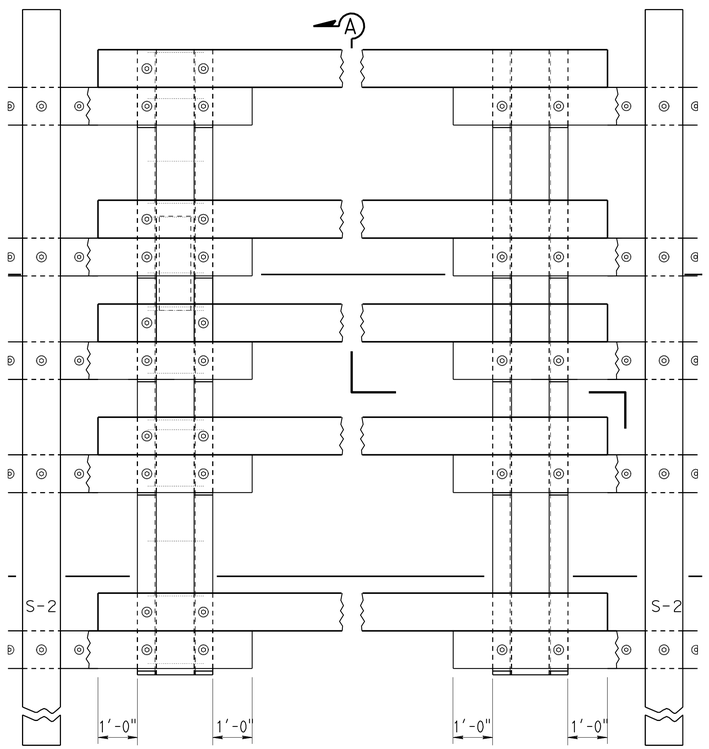

LAYOUT ELEVATION
1/2 " = 1'-0"

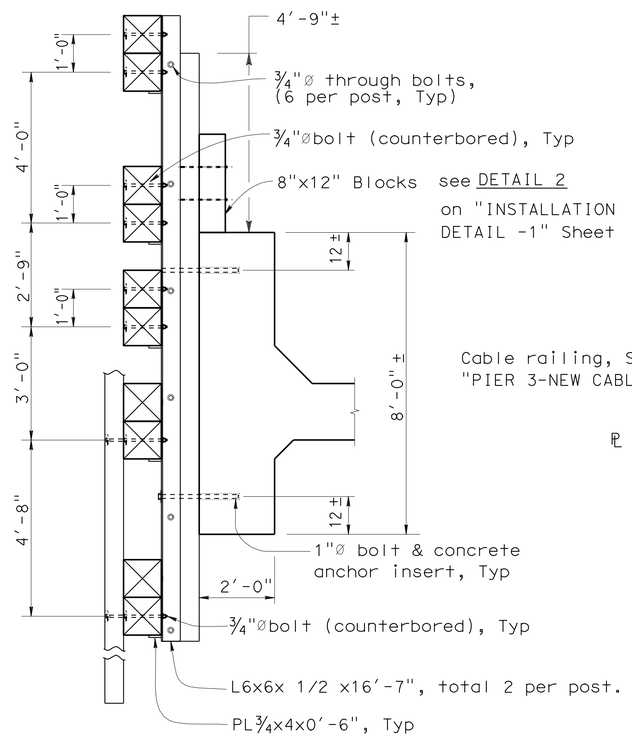

SECTION A-A

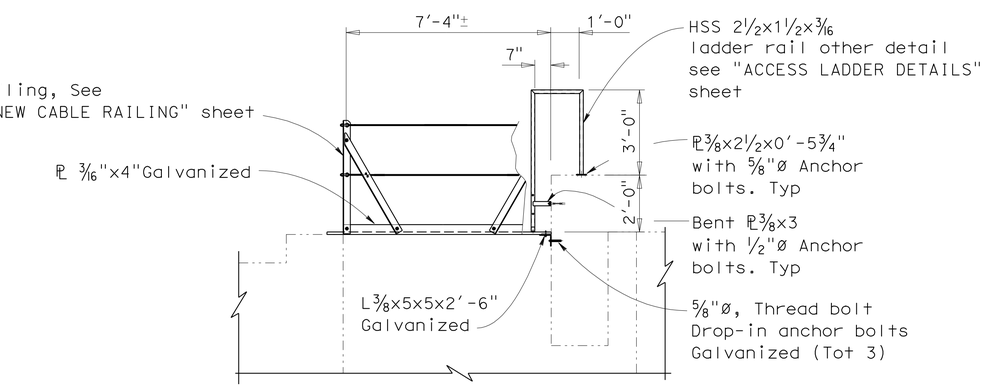

WALKWAY ELEVATION 3
3/8" = 1'-0"

NOTE:
THE CONTRACTOR SHALL VERIFY ALL CONTROLLING FIELD DIMENSIONS BEFORE ORDERING OR FABRICATING ANY MATERIAL.

3 **REVISED PER ADDENDUM No. 3 DATED NOVEMBER 23, 2011**

DESIGN	BY R. Castro	CHECKED M. Bahrami	
DETAILS	BY M. Yu	CHECKED R. Castro	
QUANTITIES	BY R. Castro	CHECKED H. Su	

STATE OF CALIFORNIA
DEPARTMENT OF TRANSPORTATION

DIVISION OF MAINTENANCE
STRUCTURE MAINTENANCE AND INVESTIGATIONS

BRIDGE NO. 23-0015R
POST MILE 13.9/14.2 0.0/0.5

CU 04609
EA 049071

CARQUINEZ BRIDGE
FENDER REHABILITATION
SHEATHING PLAN @ BUMPER GAP

STRUCTURES DESIGN DETAIL SHEET (ENGLISH) (REV. 10/25/05)

ORIGINAL SCALE IN INCHES FOR REDUCED PLANS 0 1 2 3

DISREGARD PRINTS BEARING EARLIER REVISION DATES

REVISION DATES: 08-26-10 10-13-11 10-24-11

SHEET 27 OF 28

FILE => 27-cntilvrdet.dgn

USERNAME => s121614 DATE PLOTTED => 23-NOV-2011 TIME PLOTTED => 07:58